SECTION ACC
ACCELERATOR CONTROL SYSTEM

CONTENTS

SERVICE INFORMATION 2

PRECAUTIONS 2
Precaution for Supplemental Restraint System (SRS) "AIR BAG" and "SEAT BELT PRE-TENSIONER" 2

ACCELERATOR CONTROL SYSTEM 3
Component 3
Removal and Installation 3

SERVICE INFORMATION

PRECAUTIONS

Precaution for Supplemental Restraint System (SRS) "AIR BAG" and "SEAT BELT PRE-TENSIONER"

INFOID:0000000001703109

The Supplemental Restraint System such as “AIR BAG” and “SEAT BELT PRE-TENSIONER”, used along with a front seat belt, helps to reduce the risk or severity of injury to the driver and front passenger for certain types of collision. This system includes seat belt switch inputs and dual stage front air bag modules. The SRS system uses the seat belt switches to determine the front air bag deployment, and may only deploy one front air bag, depending on the severity of a collision and whether the front occupants are belted or unbelted.
Information necessary to service the system safely is included in the SR and SB section of this Service Manual.

WARNING:

- **To avoid rendering the SRS inoperative, which could increase the risk of personal injury or death in the event of a collision which would result in air bag inflation, all maintenance must be performed by an authorized NISSAN/INFINITI dealer.**
- **Improper maintenance, including incorrect removal and installation of the SRS, can lead to personal injury caused by unintentional activation of the system. For removal of Spiral Cable and Air Bag Module, see the SR section.**
- **Do not use electrical test equipment on any circuit related to the SRS unless instructed to in this Service Manual. SRS wiring harnesses can be identified by yellow and/or orange harnesses or harness connectors.**

ACCELERATOR CONTROL SYSTEM

Component

INFOID:0000000001703110

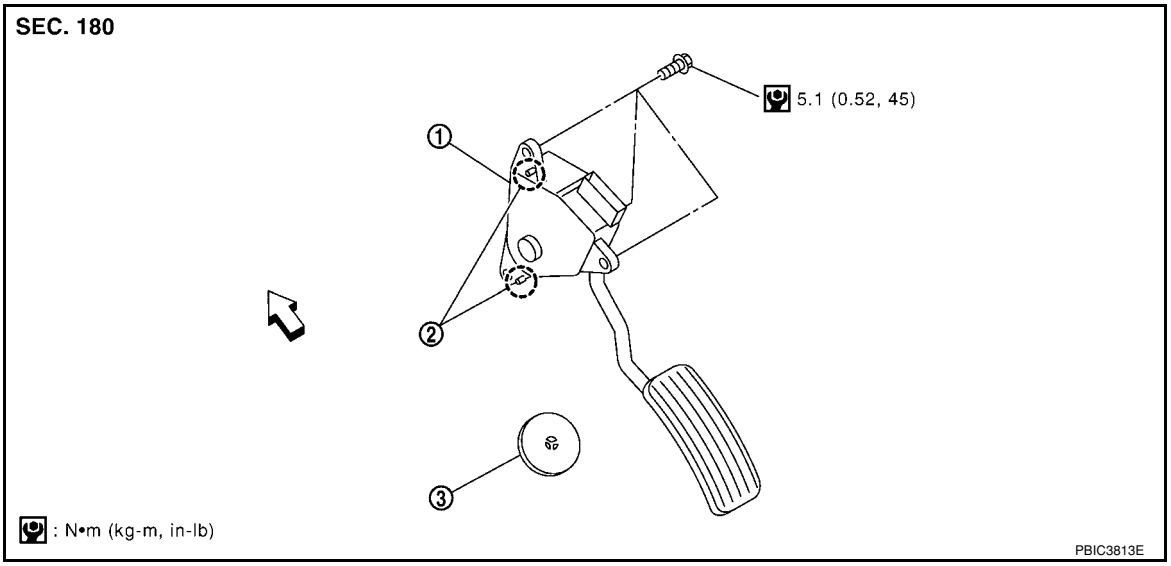

1. Accelerator pedal assembly
2. Locating pin
3. Accelerator pedal stopper

⇦ : Vehicle front

Removal and Installation

INFOID:0000000001703111

CAUTION:
- **Do not disassemble accelerator pedal assembly. Do not remove accelerator pedal position sensor from accelerator pedal assembly.**
- **Avoid impact from dropping etc. during handling.**
- **Be careful to keep accelerator pedal assembly away from water.**

REMOVAL

1. Disconnect the negative battery terminal.
2. Disconnect accelerator pedal position sensor harness connector.
3. Loosen mounting bolts, and remove accelerator pedal assembly.

INSTALLATION

Note the following, and install in the reverse order of removal.
- Insert locating pin into vehicle side to position accelerator pedal assembly. Install mounting bolt to accelerator pedal assembly.
- Align the stud bolt on the floor with the thread hole to insert accelerator pedal stopper until it contacts the face.

INSPECTION AFTER INSTALLATION

- Make sure that the accelerator pedal moves smoothly within the whole operation range.
- Make sure that the accelerator pedal securely returns to the original position.

SECTION ACS
AUTO CRUISE CONTROL SYSTEM

CONTENTS

SERVICE INFORMATION 2

AUTOMATIC SPEED CONTROL DEVICE (ASCD) 2
Description 2

SERVICE INFORMATION

AUTOMATIC SPEED CONTROL DEVICE (ASCD)

Description

INFOID:0000000001704689

Regarding the information for ASCD system, refer to EC-28.

SECTION AT
AUTOMATIC TRANSAXLE

CONTENTS

SERVICE INFORMATION 5

INDEX FOR DTC 5
Alphabetical Index 5
DTC No. Index 5

PRECAUTIONS 7
Precaution for Supplemental Restraint System (SRS) "AIR BAG" and "SEAT BELT PRE-TENSIONER" 7
Precaution Necessary for Steering Wheel Rotation After Battery Disconnect 7
Precaution for On Board Diagnosis (OBD) System of A/T and Engine 7
Precaution 8
Service Notice or Precaution 9

PREPARATION 10
Special Service Tool 10
Commercial Service Tool 13

A/T FLUID 15
Checking A/T Fluid 15
Changing A/T Fluid 15
A/T Fluid Cooler Cleaning 16

A/T CONTROL SYSTEM 19
Cross-Sectional View 19
Shift Mechanism 19
TCM Function 27
CAN Communication 28
Input/Output Signal of TCM 28
Line Pressure Control 29
Shift Control 30
Lock-up Control 31
Engine Brake Control (Overrun Clutch Control) 32
Control Valve 34
Centrifugal Cancel Mechanism 34

ON BOARD DIAGNOSTIC (OBD) SYSTEM 36
Introduction 36
OBD-II Function for A/T System 36
One or Two Trip Detection Logic of OBD-II 36
OBD-II Diagnostic Trouble Code (DTC) 36
Malfunction Indicator Lamp (MIL) 38

TROUBLE DIAGNOSIS 39
DTC Inspection Priority Chart 39
Fail-Safe 39
How to Perform Trouble Diagnosis for Quick and Accurate Repair 40
A/T Electrical Parts Location 46
Circuit Diagram 47
Inspections Before Trouble Diagnosis 48
Road Test 52
Check Before Engine Is Started 53
Check at Idle 53
Cruise Test - Part 1 55
Cruise Test - Part 2 58
Cruise Test - Part 3 59
Vehicle Speed at Which Gear Shifting Occurs 61
Vehicle Speed at Which Lock-up Occurs/Releases 61
Symptom Chart 61
TCM Terminal and Reference Value 71
CONSULT-III Function (A/T) 73
Diagnosis Procedure without CONSULT-III 78

DTC U1000 CAN COMMUNICATION LINE 83
Description 83
On Board Diagnosis Logic 83
Possible Cause 83
DTC Confirmation Procedure 83
Wiring Diagram - AT - CAN 84
Diagnosis Procedure 85

DTC P0705 PARK/NEUTRAL POSITION (PNP) SWITCH 86
Description 86
CONSULT-III Reference Value in Data Monitor Mode 86
On Board Diagnosis Logic 86
Possible Cause 86

DTC Confirmation Procedure 86
Wiring Diagram - AT - PNP/SW 87
Diagnosis Procedure 88
Component Inspection 90

DTC P0710 A/T FLUID TEMPERATURE SENSOR CIRCUIT 91
Description 91
CONSULT-III Reference Value in Data Monitor Mode 91
On Board Diagnosis Logic 91
Possible Cause 91
DTC Confirmation Procedure 91
Wiring Diagram - AT - FTS 92
Diagnosis Procedure 92
Component Inspection 95

DTC P0720 VEHICLE SPEED SENSOR A/T (REVOLUTION SENSOR) 96
Description 96
CONSULT-III Reference Value in Data Monitor Mode 96
On Board Diagnosis Logic 96
Possible Cause 96
DTC Confirmation Procedure 96
Wiring Diagram - AT - VSSA/T 97
Diagnosis Procedure 98

DTC P0725 ENGINE SPEED SIGNAL 101
Description 101
CONSULT-III Reference Value in Data Monitor Mode 101
On Board Diagnosis Logic 101
Possible Cause 101
DTC Confirmation Procedure 101
Wiring Diagram - AT - ENGSS 102
Diagnosis Procedure 103

DTC P0731 A/T 1ST GEAR FUNCTION 105
Description 105
On Board Diagnosis Logic 105
Possible Cause 105
DTC Confirmation Procedure 105
Diagnosis Procedure 106

DTC P0732 A/T 2ND GEAR FUNCTION 108
Description 108
On Board Diagnosis Logic 108
Possible Cause 108
DTC Confirmation Procedure 108
Diagnosis Procedure 109

DTC P0733 A/T 3RD GEAR FUNCTION 111
Description 111
On Board Diagnosis Logic 111
Possible Cause 111
DTC Confirmation Procedure 111
Diagnosis Procedure 112

DTC P0734 A/T 4TH GEAR FUNCTION 114
Description 114
CONSULT-III Reference Value in Data Monitor Mode 114
On Board Diagnosis Logic 114
Possible Cause 114
DTC Confirmation Procedure 114
Diagnosis Procedure 115

DTC P0740 TORQUE CONVERTER CLUTCH SOLENOID VALVE 119
Description 119
CONSULT-III Reference Value in Data Monitor Mode 119
On Board Diagnosis Logic 119
Possible Cause 119
DTC Confirmation Procedure 119
Wiring Diagram - AT - TCV 120
Diagnosis Procedure 121
Component Inspection 122

DTC P0744 A/T TCC S/V FUNCTION (LOCK-UP) 124
Description 124
CONSULT-III Reference Value in Data Monitor Mode 124
On Board Diagnosis Logic 124
Possible Cause 124
DTC Confirmation Procedure 124
Diagnosis Procedure 125

DTC P0745 LINE PRESSURE SOLENOID VALVE 129
Description 129
CONSULT-III Reference Value in Data Monitor Mode 129
On Board Diagnosis Logic 129
Possible Cause 129
DTC Confirmation Procedure 129
Wiring Diagram - AT - LPSV 130
Diagnosis Procedure 131
Component Inspection 133

DTC P0750 SHIFT SOLENOID VALVE A 134
Description 134
CONSULT-III Reference Value in Data Monitor Mode 134
On Board Diagnosis Logic 134
Possible Cause 134
DTC Confirmation Procedure 134
Wiring Diagram - AT - SSV/A 135
Diagnosis Procedure 136
Component Inspection 137

DTC P0755 SHIFT SOLENOID VALVE B 139
Description 139
CONSULT-III Reference Value in Data Monitor Mode 139
On Board Diagnosis Logic 139
Possible Cause 139
DTC Confirmation Procedure 139

Wiring Diagram - AT - SSV/B 140
Diagnosis Procedure 141
Component Inspection 142

DTC P1760 OVERRUN CLUTCH SOLENOID VALVE 144
Description 144
CONSULT-III Reference Value in Data Monitor Mode 144
On Board Diagnosis Logic 144
Possible Cause 144
DTC Confirmation Procedure 144
Wiring Diagram - AT - OVRCSV 145
Diagnosis Procedure 146
Component Inspection 147

DTC VEHICLE SPEED SENSOR MTR 149
Description 149
CONSULT-III Reference Value in Data Monitor Mode 149
On Board Diagnosis Logic 149
Possible Cause 149
DTC Confirmation Procedure 149
Wiring Diagram - AT - VSSMTR 150
Diagnosis Procedure 151

DTC BATT/FLUID TEMP SEN (A/T FLUID TEMP SENSOR CIRCUIT AND TCM POWER SOURCE) 152
Description 152
CONSULT-III Reference Value in Data Monitor Mode 152
On Board Diagnosis Logic 152
Possible Cause 152
DTC Confirmation Procedure 152
Wiring Diagram - AT - BA/FTS 153
Diagnosis Procedure 154
Component Inspection 156

DTC TURBINE REVOLUTION SENSOR 158
Description 158
CONSULT-III Reference Value in Data Monitor Mode 158
On Board Diagnosis Logic 158
Possible Cause 158
DTC Confirmation Procedure 158
Wiring Diagram - AT - PT/SEN 159
Diagnosis Procedure 160

CONTROL UNIT (RAM), CONTROL UNIT (ROM) 163
Description 163
On Board Diagnosis Logic 163
Possible Cause 163
DTC Confirmation Procedure 163
Diagnosis Procedure 163

MAIN POWER SUPPLY AND GROUND CIRCUIT 164
Wiring Diagram - AT - MAIN 164
Diagnosis Procedure 165

PNP, OD SWITCH AND CLOSED THROTTLE, WIDE OPEN THROTTLE POSITION SIGNAL CIRCUIT 167
CONSULT-III Reference Value in Data Monitor Mode 167
TCM Terminal and Reference Value 167
Diagnosis Procedure 167
Component Inspection 171

SHIFT POSITION INDICATOR CIRCUIT 172
Description 172
CONSULT-III Reference Value in Data Monitor Mode 172
Diagnosis Procedure 172

TROUBLE DIAGNOSIS FOR SYMPTOMS 173
Wiring Diagram - AT - NONDTC 173
OD OFF Indicator Lamp Does Not Come On 176
Engine Cannot Be Started in "P" and "N" Position. 178
In "P" Position, Vehicle Moves Forward or Backward When Pushed 179
In "N" Position, Vehicle Moves 179
Large Shock "N" → "R" Position 180
Vehicle Does Not Creep Backward in "R" Position. 181
Vehicle Does Not Creep Forward in "D", "2" or "1" Position 182
Vehicle Cannot Be Started from D_1 183
A/T Does Not Shift: $D_1 \rightarrow D_2$ or Does Not Kick-down: $D_4 \rightarrow D_2$ 185
A/T Does Not Shift: $D_2 \rightarrow D_3$ 186
A/T Does Not Shift: $D_3 \rightarrow D_4$ 188
A/T Does Not Perform Lock-up 189
A/T Does Not Hold Lock-up Condition 190
Lock-up Is Not Released 191
Engine Speed Does Not Return to Idle (Light Braking $D_4 \rightarrow D_3$) 192
A/T Does Not Shift: $D_4 \rightarrow D_3$, When OD OFF 193
A/T Does Not Shift: $D_3 \rightarrow 2_2$, When Selector Lever "D" → "2" Position 194
A/T Does Not Shift: $2_2 \rightarrow 1_1$, When Selector Lever "2" → "1" Position 195
Vehicle Does Not Decelerate by Engine Brake 197
TCM Self-Diagnosis Does Not Activate 200

TRANSMISSION CONTROL MODULE 202
Removal and Installation 202

SHIFT CONTROL SYSTEM 203
Control Device Removal and Installation 203
Control Device Disassembly and Assembly 206
Selector Lever Knob Removal and Installation 206
Adjustment of A/T Position 207
Checking of A/T Position 207

A/T SHIFT LOCK SYSTEM 209
Description 209
Shift Lock System Parts Location 209
Wiring Diagram - AT - SHIFT 210

Diagnosis Procedure 210

KEY INTERLOCK CABLE 213
Removal and Installation 213

ON-VEHICLE SERVICE 216
Control Valve Assembly and Accumulators 216
Park/Neutral Position (PNP) Switch 219
Revolution Sensor 221
Turbine Revolution Sensor (Power Train Revolution Sensor) 222
Differential Side Oil Seal 223

AIR BREATHER HOSE 225
Removal and Installation 225

TRANSAXLE ASSEMBLY 226
Removal and Installation 226

OVERHAUL 230
Component 230
Oil Channel 237
Location of Adjusting Shims, Needle Bearings and Thrust Washers 238
Location of Snap Rings 239

DISASSEMBLY 240
Disassembly 240

REPAIR FOR COMPONENT PARTS 257
Manual Shaft 257
Oil Pump 260
Control Valve Assembly 263
Control Valve Upper Body 272
Control Valve Lower Body 276
Reverse Clutch 279
High Clutch 284
Forward and Overrun Clutches 288
Low & Reverse Brake 295
Rear Internal Gear and Forward Clutch Hub 299
Output Shaft, Output Gear, Idler Gear, Reduction Pinion Gear and Bearing Retainer 302
Band Servo Piston Assembly 307
Final Drive 313

ASSEMBLY 318
Assembly (1) 318
Adjustment (1) 319
Assembly (2) 325
Adjustment (2) 330
Assembly (3) 333

SERVICE DATA AND SPECIFICATIONS (SDS) 341
General Specification 341
Vehicle Speed at Which Gear Shifting Occurs 341
Vehicle Speed at When Lock-up Occurs/Releases .341
Stall Speed 341
Line Pressure 341
Adjusting shims, Needle Bearings, Thrust Washers and Snap Rings 341
Control Valves 343
Accumulator 343
Clutches and Brakes 343
Final Drive 345
Planetary Carrier 345
Oil Pump 345
Input Shaft 345
Reduction Pinion Gear 345
Band Servo 345
Output Shaft 346
Bearing Retainer 346
Total End Play 346
Reverse Clutch End Play 346
Removal and Installation 346
Shift Solenoid Valves 346
Solenoid Valves 346
A/T Fluid Temperature Sensor 347
Revolution Sensor 347
Dropping Resistor 347
Turbine Revolution Sensor (Power Train Revolution Sensor) 347

SERVICE INFORMATION

INDEX FOR DTC

Alphabetical Index

INFOID:0000000001703149

NOTE:
If DTC "CAN COMM CIRCUIT" is displayed with other DTCs, first perform the trouble diagnosis for DTC "CAN COMM CIRCUIT". Refer to AT-83.

Items (CONSULT-III screen terms)	DTC CONSULT-III or GST*1	Reference page
A/T 1ST GR FNCTN	P0731	AT-105
A/T 2ND GR FNCTN	P0732	AT-108
A/T 3RD GR FNCTN	P0733	AT-111
A/T 4TH GR FNCTN	P0734	AT-114
A/T TCC S/V FNCTN	P0744	AT-124
ATF TEMP SEN/CIRC	P0710	AT-91
BATT/FLUID TEMP SEN	—	AT-152
CAN COMM CIRCUIT	U1000	AT-83
CONTROL UNIT (RAM)	—	AT-163
CONTROL UNIT (ROM)	—	AT-163
ENGINE SPEED SIG	P0725	AT-101
LINE PRESSURE S/V	P0745	AT-129
OVERRUN CLUTCH S/V	P1760	AT-144
PNP SW/CIRC	P0705	AT-86
SHIFT SOLENOID/V A*2	P0750	AT-134
SHIFT SOLENOID/V B*2	P0755	AT-139
T/C CLUTCH SOL/V	P0740	AT-119
TURBINE SENSOR	—	AT-158
VHCL SPEED SEN-A/T*3	P0720	AT-96
VHCL SPEED SEN-MTR	—	AT-149

*1: These numbers is prescribed by SAE J2012.

*2: When the fail-safe operation occurs, the MIL illuminates.

*3: The MIL illuminates when both the "Revolution sensor signal" and the "Vehicle speed sensor signal" meet the fail-safe condition at the same time.

DTC No. Index

INFOID:0000000001703150

NOTE:
If DTC "CAN COMM CIRCUIT" is displayed with other DTCs, first perform the trouble diagnosis for DTC "CAN COMM CIRCUIT". Refer to AT-83.

DTC CONSULT-III or GST*1	Items (CONSULT-III screen terms)	Reference page
P0705	PNP SW/CIRC	AT-86
P0710	ATF TEMP SEN/CIRC	AT-91
P0720	VHCL SPEED SEN-A/T*3	AT-96
P0725	ENGINE SPEED SIG	AT-101
P0731	A/T 1ST GR FNCTN	AT-105

DTC CONSULT-III or GST*1	Items (CONSULT-III screen terms)	Reference page
P0732	A/T 2ND GR FNCTN	AT-108
P0733	A/T 3RD GR FNCTN	AT-111
P0734	A/T 4TH GR FNCTN	AT-114
P0740	T/C CLUTCH SOL/V	AT-119
P0744	A/T TCC S/V FNCTN	AT-124
P0745	LINE PRESSURE S/V	AT-129
P0750	SHIFT SOLENOID/V A*2	AT-134
P0755	SHIFT SOLENOID/V B*2	AT-139
P1760	OVERRUN CLUTCH S/V	AT-144
U1000	CAN COMM CIRCUIT	AT-83
—	BATT/FLUID TEMP SEN	AT-152
—	CONTROL UNIT (RAM)	AT-163
—	CONTROL UNIT (ROM)	AT-163
—	TURBINE SENSOR	AT-158
—	VHCL SPEED SEN-MTR	AT-149

*1: These numbers is prescribed by SAE J2012.

*2: When the fail-safe operation occurs, the MIL illuminates.

*3: The MIL illuminates when both the “Revolution sensor signal” and the “Vehicle speed sensor signal” meet the fail-safe condition at the same time.

PRECAUTIONS

Precaution for Supplemental Restraint System (SRS) "AIR BAG" and "SEAT BELT PRE-TENSIONER"

INFOID:0000000001703151

The Supplemental Restraint System such as “AIR BAG” and “SEAT BELT PRE-TENSIONER”, used along with a front seat belt, helps to reduce the risk or severity of injury to the driver and front passenger for certain types of collision. This system includes seat belt switch inputs and dual stage front air bag modules. The SRS system uses the seat belt switches to determine the front air bag deployment, and may only deploy one front air bag, depending on the severity of a collision and whether the front occupants are belted or unbelted.
Information necessary to service the system safely is included in the SRS and SB section of this Service Manual.

WARNING:

- **To avoid rendering the SRS inoperative, which could increase the risk of personal injury or death in the event of a collision which would result in air bag inflation, all maintenance must be performed by an authorized NISSAN/INFINITI dealer.**
- **Improper maintenance, including incorrect removal and installation of the SRS, can lead to personal injury caused by unintentional activation of the system. For removal of Spiral Cable and Air Bag Module, see the SRS section.**
- **Do not use electrical test equipment on any circuit related to the SRS unless instructed to in this Service Manual. SRS wiring harnesses can be identified by yellow and/or orange harnesses or harness connectors.**

Precaution Necessary for Steering Wheel Rotation After Battery Disconnect

INFOID:0000000001703152

NOTE:

- This Procedure is applied only to models with Intelligent Key system and NVIS/IVIS (NISSAN/INFINITI VEHICLE IMMOBILIZER SYSTEM - NATS).
- Remove and install all control units after disconnecting both battery cables with the ignition knob in the ″LOCK″ position.
- Always use CONSULT-III to perform self-diagnosis as a part of each function inspection after finishing work. If DTC is detected, perform trouble diagnosis according to self-diagnostic results.

For models equipped with the Intelligent Key system and NVIS/IVIS, an electrically controlled steering lock mechanism is adopted on the key cylinder.
For this reason, if the battery is disconnected or if the battery is discharged, the steering wheel will lock and steering wheel rotation will become impossible.
If steering wheel rotation is required when battery power is interrupted, follow the procedure below before starting the repair operation.

OPERATION PROCEDURE

1. Connect both battery cables.
   NOTE:
   Supply power using jumper cables if battery is discharged.
2. Use the Intelligent Key or mechanical key to turn the ignition switch to the ″ACC″ position. At this time, the steering lock will be released.
3. Disconnect both battery cables. The steering lock will remain released and the steering wheel can be rotated.
4. Perform the necessary repair operation.
5. When the repair work is completed, return the ignition switch to the ″LOCK″ position before connecting the battery cables. (At this time, the steering lock mechanism will engage.)
6. Perform a self-diagnosis check of all control units using CONSULT-III.

Precaution for On Board Diagnosis (OBD) System of A/T and Engine

INFOID:0000000001703153

The ECM has an on board diagnostic system. It will light up the malfunction indicator lamp (MIL) to warn the driver of a malfunction causing emission deterioration.

CAUTION:

- **Be sure to turn the ignition switch OFF and disconnect battery negative cable from battery negative terminal before any repair or inspection work. The open/short circuit of related switches, sensors, solenoid valves, etc. will cause the MIL to light up.**
- **Be sure to connect and lock the connectors securely after work. A loose (unlocked) connector will cause the MIL to light up due to an open circuit. (Be sure the connectors are free from water, grease, dirt, bent terminals, etc.)**
- **Be sure to route and secure the harnesses properly after work. Interference of the harness with a bracket, etc. may cause the MIL to light up due to a short circuit.**
- **Be sure to erase the unnecessary malfunction information (repairs completed) from the TCM and ECM before returning the vehicle to the customer.**

Precaution

INFOID:0000000001703154

- **Before connecting or disconnecting the TCM harness connector, turn ignition switch OFF and disconnect the battery cable from the negative terminal. Failure to do so may damage the TCM. Because battery voltage is applied to TCM even if ignition switch is turned off.**

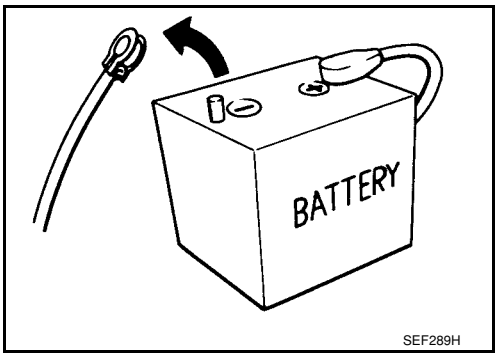

- **When connecting or disconnecting pin connectors into or from TCM, take care not to damage pin terminals (bend or break).**
  Make sure that there are not any bends or breaks on TCM pin terminal, when connecting pin connectors.

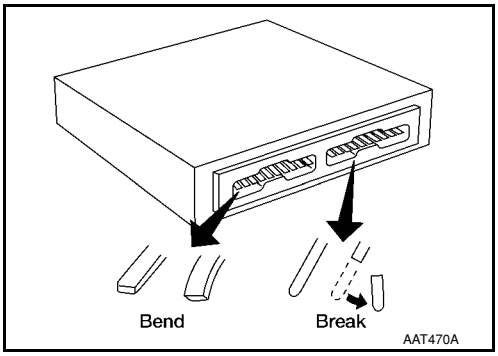

- **Before replacing TCM, perform TCM input/output signal inspection and make sure whether TCM functions properly or not. (See page AT-71, "TCM Terminal and Reference Value".)**
- **After performing each TROUBLE DIAGNOSIS, perform "DTC (Diagnostic Trouble Code) Confirmation Procedure".**
  The DTC should not be displayed in the "DTC Confirmation Procedure" if the repair is completed.

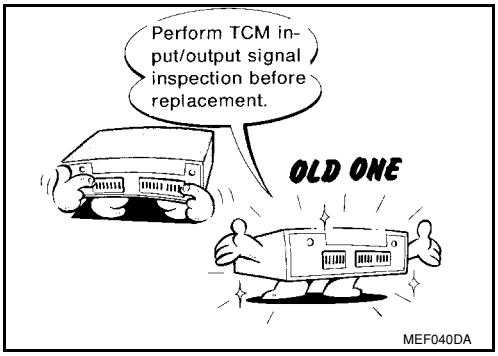

- Before proceeding with disassembly, thoroughly clean the outside of the transaxle. It is important to prevent the internal parts from becoming contaminated by dirt or other foreign matter.
- Disassembly should be done in a clean work area.
- Use lint-free cloth or towels for wiping parts clean. Common shop rags can leave fibers that could interfere with the operation of the A/T.
- Place disassembled parts in order for easier and proper assembly.
- All parts should be carefully cleaned with a general purpose, non-flammable solvent before inspection or reassembly.
- Gaskets, seals and O-rings should be replaced any time the A/T is disassembled.
- It is very important to perform functional tests whenever they are indicated.
- The valve body contains precision parts and requires extreme care when parts are removed and serviced. Place disassembled valve body parts in order for easier and proper assembly. Care will also prevent springs and small parts from becoming scattered or lost.
- Properly installed valves, sleeves, plugs, etc. will slide along bores in valve body under their own weight.

- Before assembly, apply a coat of recommended ATF to all parts. Apply petroleum jelly to protect O-rings and seals, or hold bearings and washers in place during assembly. Do not use grease.
- Extreme care should be taken to avoid damage to O-rings, seals and gaskets when assembling.
- Clean or replace ATF cooler if excessive foreign material is found in oil pan or clogging strainer. Refer to Refer to .
- After overhaul, refill the A/T with new ATF.
- When the A/T drain plug is removed, only some of the fluid is drained. Old A/T fluid will remain in torque converter and ATF cooling system.
  Always follow the procedures under “Changing A/T Fluid” in the AT section when changing A/T fluid. Refer to MA-22, "Changing A/T Fluid", MA-22, "Checking A/T Fluid".

Service Notice or Precaution

INFOID:0000000001703155

ATF COOLER SERVICE

If A/T fluid contains frictional material (clutches, bands, etc.), or if an A/T is repaired, overhauled, or replaced, inspect and clean the A/T oil cooler mounted in the radiator or replace the radiator. Flush cooler lines using cleaning solvent and compressed air after repair. Check Service Bulletins for latest A/T oil cooler cleaning procedure. For radiator replacement, refer to Refer to CO-11.

TORQUE CONVERTER SERVICE

The torque converter should be replaced under any of the following conditions:
- External leaks in the hub weld area.
- Converter hub is scored or damaged.
- Converter pilot is broken, damaged or fits poorly into crankshaft.
- Steel particles are found after flushing the cooler and cooler lines.
- Pump is damaged or steel particles are found in the converter.
- Vehicle has TCC shudder and/or no TCC apply. Replace only after all hydraulic and electrical diagnoses have been made. (Converter clutch material may be glazed.)
- Converter is contaminated with engine coolant containing antifreeze.
- Internal malfunction of stator roller clutch.
- Heavy clutch debris due to overheating (blue converter).
- Steel particles or clutch lining material found in fluid filter or on magnet when no internal parts in unit are worn or damaged — indicates that lining material came from converter.

The torque converter should not be replaced if:
- The fluid has an odor, is discolored, and there is no evidence of metal or clutch facing particles.
- The threads in one or more of the converter bolt holes are damaged.
- A/T malfunction did not display evidence of damaged or worn internal parts, steel particles or clutch plate lining material in unit and inside the fluid filter.
- Vehicle has been exposed to high mileage (only). The exception may be where the torque converter clutch dampener plate lining has seen excess wear by vehicles operated in heavy and/or constant traffic, such as taxi, delivery or police use.

OBD-II SELF-DIAGNOSIS

- A/T self-diagnosis is performed by the TCM in combination with the ECM. The results can be read through the blinking pattern of the OD OFF indicator lamp or the malfunction indicator lamp (MIL). Refer to the table on AT-78, "Diagnosis Procedure without CONSULT-III" for the indicator used to display each self-diagnostic result.
- The self-diagnostic results indicated by the MIL are automatically stored in both the ECM and TCM memories.
  Always perform the procedure “HOW TO ERASE DTC” on AT-36, "OBD-II Diagnostic Trouble Code (DTC)" to complete the repair and avoid unnecessary blinking of the MIL.
- The following self-diagnostic items can be detected using ECM self-diagnostic results mode* only when the OD OFF indicator lamp does not indicate any malfunctions.

- PNP switch
- A/T 1st, 2nd, 3rd, or 4th gear function

*: For details of OBD-II, refer to AT-36.

- **Certain systems and components, especially those related to OBD, may use a new style slide-locking type harness connector.**
  For description and how to disconnect, refer to PG-65.

PREPARATION

Special Service Tool

INFOID:0000000001703156

The actual shapes of Kent-Moore tools may differ from those of special service tools illustrated here.

Tool number (Kent-Moore No.) Tool name		Description
ST2505S001 (J-34301) Oil pressure gauge set 1. ST25051001 (J-34301) Oil pressure gauge 2. ST25052000 (J-34301) Hose 3. ST25053000 (J-25695-3) Joint pipe 4. ST25054000 (J-25695-4) Adapter 5. ST25055000 (J-25695-5) Adapter	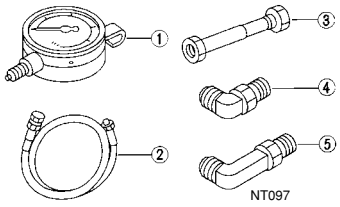	Measuring line pressure
ST35325000 (—) Drift	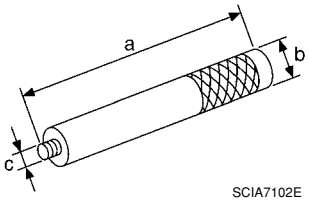	Installing LH differential side oil seal (Use with KV31103000) **a: 215 mm (8.46 in)** **b: 25 mm (0.98 in) dia.** **c: M12 X 1.5P**
KV31103000 (J-38982) Drift	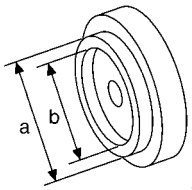	Installing LH differential side oil seal (Use with ST35325000) **a: 59 mm (2.32 in) dia.** **b: 49 mm (1.93 in) dia.**
ST37830000 (—) Drift	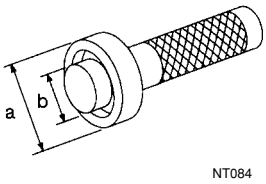	Installing idler gear bearing outer race **a: 61.9 mm (2.437 in) dia.** **b: 39 mm (1.54 in) dia.**
ST27180001 (J-25726-A) Puller	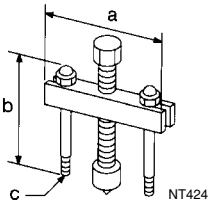	Removing idler gear **a: 100 mm (3.94 in)** **b: 110 mm (4.33 in)** **c: M8 X 1.25P**

Tool number (Kent-Moore No.) Tool name	Description
KV31103200 (J-39186) Clutch spring compressor 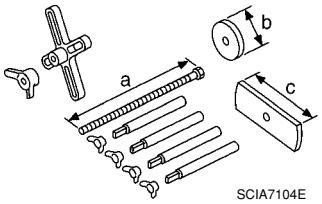	• Removing and installing clutch spring retainer assembly • Removing and installing cancel cover **a: 179 mm (7.05 in)** **b: 76 mm (2.99 in) dia.** **c: 174 mm (6.85 in)**
ST23540000 (J-25689-A) Pin punch 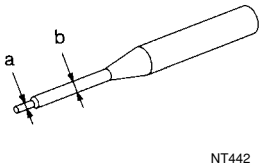	• Removing and installing retaining pin of manual plate • Installing retaining pin of manual shaft • Installing retaining pin of parking rod plate **a: 2.3 mm (0.091 in) dia.** **b: 4 mm (0.16 in) dia.**
KV32101000 (J-25689-A) Pin punch 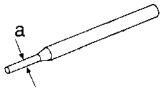	Removing and installing lock pin of pinion mate shaft **a: 4 mm (0.16 in) dia.**
ST33400001 (J-26082) Drift 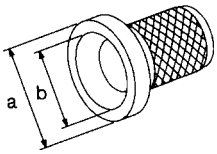	Installing oil pump housing oil seal **a: 60 mm (2.36 in) dia.** **b: 47 mm (1.85 in) dia.**
KV381054S0 (J-34286) Puller 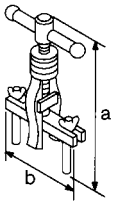	• Removing radial needle bearing • Removing idler gear bearing outer race • Removing differential side bearing outer races **a: 250 mm (9.84 in)** **b: 160 mm (6.30 in)**
ST30031000 (J-22912-01) Puller 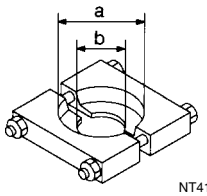	Removing reduction pinion gear bearing inner race **a: 90 mm (3.54 in) dia.** **b: 50 mm (1.97 in) dia.**
ST35272000 (J-26092) Drift 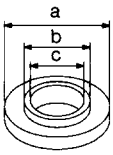	• Installing reduction pinion gear bearing inner race • Installing idler gear bearing inner race **a: 72 mm (2.83 in) dia.** **b: 40 mm (1.57 in) dia.** **c: 35.5 mm (1.398 in) dia.**

Tool number (Kent-Moore No.) Tool name	Description
ST37830000 (—) Drift 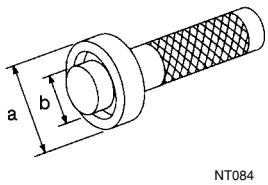 	Installing idler gear bearing outer race **a: 61.9 mm (2.437 in) dia.** **b: 39 mm (1.54 in) dia.**
ST35271000 (J-26091) Drift 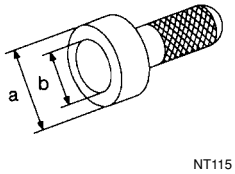 	Installing idler gear **a: 72 mm (2.83 in) dia.** **b: 63 mm (2.48 in) dia.**
ST3127S000 (J-25765-A) Preload gauge 1. GG9103000 (J-25765-A) Torque wrench 2. HT62940000 (—) Socket adapter 3. HT62900000 (—) Socket adapter 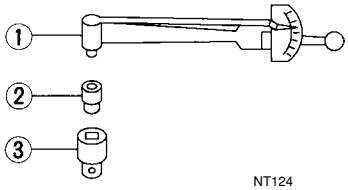 	• Measuring turning torque of reduction pinion gear • Measuring turning torque of final drive assembly
KV38105710 (J-39026) Preload adapter 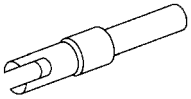 	• Selecting differential side bearing adjusting shim • Measuring turning torque of final drive assembly
ST35321000 (—) Drift 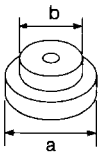 	Installing output shaft bearing **a: 49 mm (1.93 in) dia.** **b: 41 mm (1.61 in) dia.**

Tool number (Kent-Moore No.) Tool name	Description
ST30633000 (—) Drift 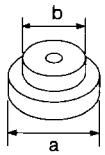 NT073	Installing differential side bearing outer races **a: 67 mm (2.48 in) dia.** **b: 49 mm (1.93 in) dia.**
ST3306S001 (J-22888-D) Differential side bearing puller set 1. ST33051001 Puller 2. ST33061000 Adapter 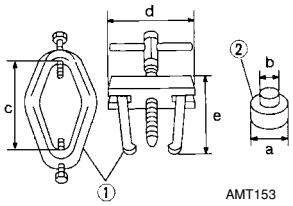 AMT153	Removing differential side bearing inner race **a: 38 mm (1.50 in) dia.** **b: 28.5 mm (1.122 in) dia.** **c: 130 mm (5.12 in)** **d: 135 mm (5.31 in)** **e: 100 mm (3.94 in)**

Commercial Service Tool

INFOID:0000000001703157

Tool name	Description
Power tool 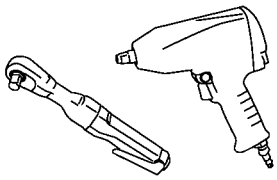 PBIC0190E	Loosening bolts and nuts
Drift 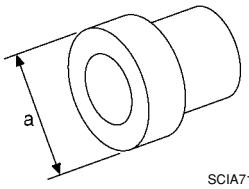 SCIA7105E	Installing manual shaft oil seal **a: 22 mm (0.87 in) dia.**
Drift 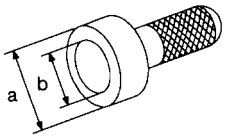 NT115	Installing RH differential side oil seal **a: 54 mm (2.13 in) dia.** **b: 47 mm (1.85 in) dia.**
Puller 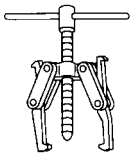 NT077	• Removing idler gear bearing inner race • Removing and installing band servo piston snap ring

Tool name	Description
Drift 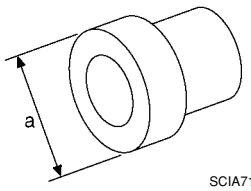 SCIA7105E	Removing idler gear bearing inner race **a: 34 mm (1.34 in) dia.**
Drift 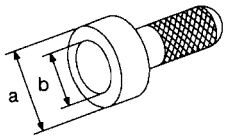 NT115	Installing differential side bearings **a: 45 mm (1.77 in) dia.** **b: 41 mm (1.61 in) dia.**
Pin punch 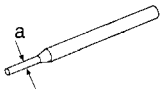 NT410	Aligning groove of manual shaft and hole of transaxle case **a: 2 mm (0.08 in) dia.**
Drift 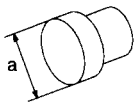 NT109	Removing idler gear bearing inner race **a: 34 mm (1.34 in) dia.**
Drift 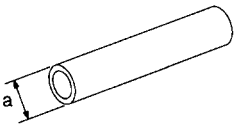 NT083	Installing radial needle bearing on bearing retainer **a: 36 mm (1.42 in) dia.**

A/T FLUID

Checking A/T Fluid

INFOID:0000000001703158

1. Warm up engine.
2. Check for A/T fluid leakage.
3. Before driving, A/T fluid level can be checked at A/T fluid temperatures of 30 to 50°C (86 to 122°F) using the “COLD” range on A/T fluid level gauge.
   a. Park vehicle on level surface and set parking brake.
   b. Start engine and move selector lever through each gear position. Leave selector lever in “P” position.
   c. Check A/T fluid level with engine idling.

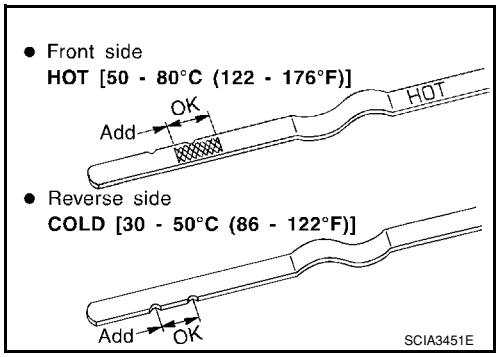

   d. Remove A/T fluid level gauge and wipe clean with lint-free cloth.
      CAUTION:
      When wiping the A/T fluid level gauge, always use lint-free cloth.
   e. Re-insert A/T fluid level gauge into A/T fluid charging pipe as far as it will go.
      CAUTION:
      Firmly fix the A/T fluid level gauge to the A/T fluid charging pipe using the stopper attached.
   f. Remove A/T fluid level gauge and note reading. If reading is at low side of range, add A/T fluid to the A/T fluid charging pipe.
      CAUTION:
      Do not overfill.

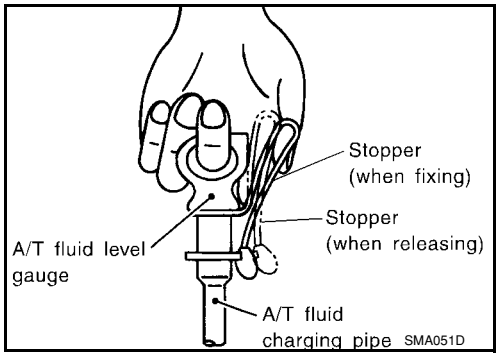

4. Drive vehicle for approximately 5 minutes.
5. Re-check A/T fluid level at A/T fluid temperatures of 50 to 80°C (122 to 176°F) using “HOT” range on A/T fluid level gauge.
   CAUTION:
   - **When wiping the A/T fluid level gauge, always use lint-free cloth.**
   - **Firmly fix the A/T fluid level gauge to the A/T fluid charging pipe using the stopper attached.**
6. Check A/T fluid condition and make any necessary repairs. Refer to AT-48, "Inspections Before Trouble Diagnosis". If the A/T fluid contains frictional material (clutches, bands, etc.), or if the A/T is repaired, overhauled, or replaced, inspect and clean the A/T fluid cooler mounted in the radiator. Refer to AT-16, "A/T Fluid Cooler Cleaning".
7. Install the removed A/T fluid level gauge into the A/T fluid charging pipe.
   CAUTION:
   Firmly fix the A/T fluid level gauge to the A/T fluid charging pipe using the stopper attached.

Changing A/T Fluid

INFOID:0000000001703159

1. Warm up A/T fluid.
2. Stop engine.
3. Drain A/T fluid by removing the drain plug. Reinstall the drain plug to the specified torque.
   CAUTION:
   Do not reuse drain plug gasket.

   Drain plug: Refer to AT-230, "Component".

4. Refill the transaxle with new specified A/T fluid through the A/T fluid charging pipe. Always refill the transaxle with the same volume of A/T fluid that was drained out.

Fluid grade and capacity: Refer to MA-10.

5. Run engine at idle speed for 5 minutes.
6. Check A/T fluid level and condition. Refer to MA-22, "Checking A/T Fluid".

A/T Fluid Cooler Cleaning

INFOID:0000000001703160

Whenever the A/T is repaired, overhauled, or replaced, the A/T fluid cooler mounted in the radiator must be inspected and cleaned.
Metal debris and friction material, if present, can become trapped in the A/T fluid cooler. This debris can contaminate the newly serviced A/T or, in severe cases, can block or restrict the flow of A/T fluid. In either case, malfunction of the newly serviced A/T may result.
Debris, if present, may build up as A/T fluid enters the cooler inlet. It will be necessary to back flush the cooler through the cooler outlet in order to flush out any built up debris.

A/T FLUID COOLER CLEANING PROCEDURE

1. Identify the A/T inlet and outlet fluid cooler hoses.
2. Position an oil pan under the A/T inlet and outlet fluid cooler hoses.
3. Disconnect the A/T fluid cooler inlet and outlet rubber hoses from the steel cooler tubes or bypass valve.
   NOTE:
   Replace the cooler hoses if rubber material from the hose remains on the tube fitting.
4. Allow any A/T fluid that remains in the cooler hoses to drain into the oil pan.

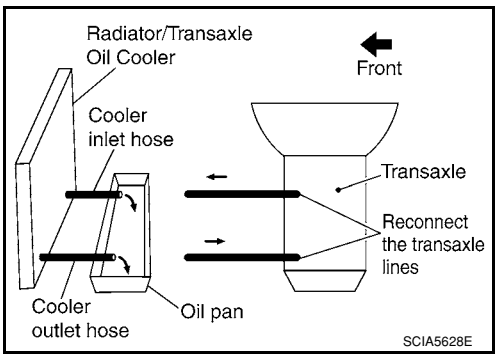

5. Insert the extension adapter hose of a can of Transmission Cooler Cleaner (Nissan P/N 999MP-AM006) into the cooler outlet hose.
   CAUTION:
   - **Wear safety glasses and rubber gloves when spraying the Transmission Cooler Cleaner.**
   - **Spray Transmission Cooler Cleaner only with adequate ventilation.**
   - **Avoid contact with eyes and skin.**
   - **Do not breath vapors or spray mist.**
6. Hold the hose and can as high as possible and spray Transmission Cooler Cleaner in a continuous stream into the cooler outlet hose until A/T fluid flows out of the cooler inlet hose for 5 seconds.

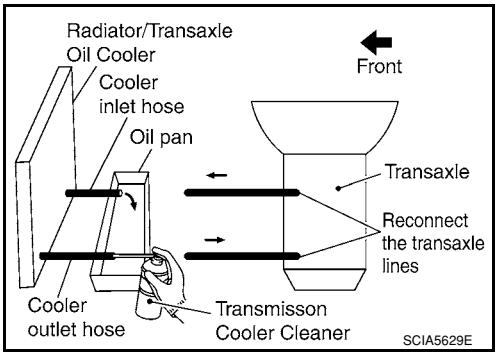

7. Insert the tip of an air gun into the end of the cooler outlet hose.
8. Wrap a shop rag around the air gun tip and end of cooler outlet hose.

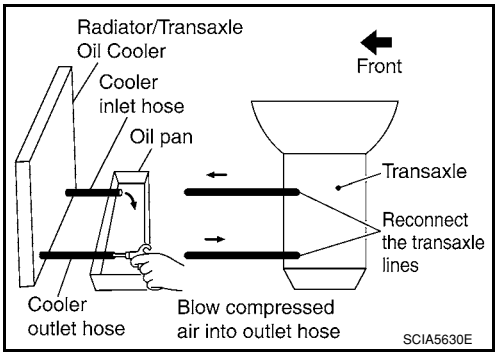

9. Blow compressed air regulated to 5 - 9 kg/cm^2 (70 - 130 psi) through the cooler outlet hose for 10 seconds to force out any remaining A/T fluid.
10. Repeat steps 5 through 9 three additional times.
11. Position an oil pan under the banjo bolts that connect the A/T fluid cooler steel lines to the A/T.
12. Remove the banjo bolts.

13. Flush each steel line from the cooler side back toward the A/T by spraying Transmission Cooler Cleaner in a continuous stream for 5 seconds.
14. Blow compressed air regulated to 5 - 9 kg/cm^2 (70 - 130 psi) through each steel line from the cooler side back toward the A/T for 10 seconds to force out any remaining A/T fluid.
15. Ensure all debris is removed from the steel cooler lines.
16. Ensure all debris is removed from the banjo bolts and fittings.
17. Perform "A/T FLUID COOLER DIAGNOSIS PROCEDURE".

A/T FLUID COOLER DIAGNOSIS PROCEDURE

NOTE:
Insufficient cleaning of the cooler inlet hose exterior may lead to inaccurate debris identification.

1. Position an oil pan under the A/T inlet and outlet cooler hoses.
2. Clean the exterior and tip of the cooler inlet hose.
3. Insert the extension adapter hose of a can of Transmission Cooler Cleaner (Nissan P/N 999MP-AM006) into the cooler outlet hose.
   CAUTION:
   - **Wear safety glasses and rubber gloves when spraying the Transmission Cooler Cleaner.**
   - **Spray Transmission Cooler Cleaner only with adequate ventilation.**
   - **Avoid contact with eyes and skin.**
   - **Do not breath vapors or spray mist.**
4. Hold the hose and can as high as possible and spray Transmission Cooler Cleaner in a continuous stream into the cooler outlet hose until A/T fluid flows out of the cooler inlet hose for 5 seconds.

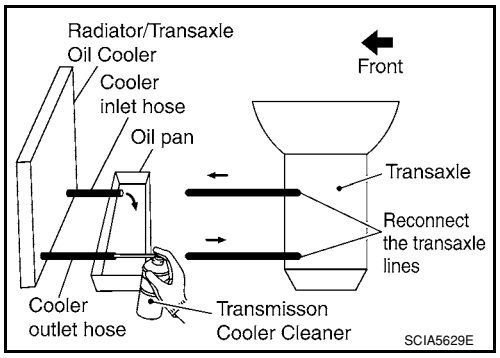

5. Tie a common white, basket-type coffee filter to the end of the cooler inlet hose.

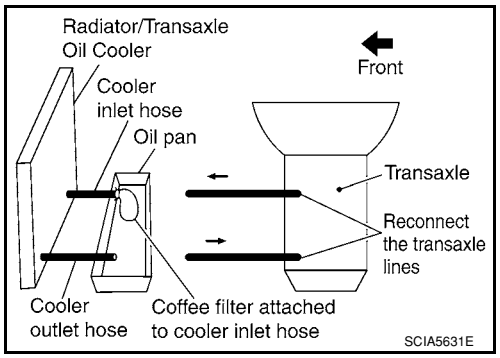

6. Insert the tip of an air gun into the end of the cooler outlet hose.
7. Wrap a shop rag around the air gun tip and end of cooler outlet hose.
8. Blow compressed air regulated to 5 - 9 kg/cm^2 (70 - 130 psi) through the cooler outlet hose to force any remaining A/T fluid into the coffee filter.
9. Remove the coffee filter from the end of the cooler inlet hose.
10. Perform "A/T FLUID COOLER INSPECTION PROCEDURE".

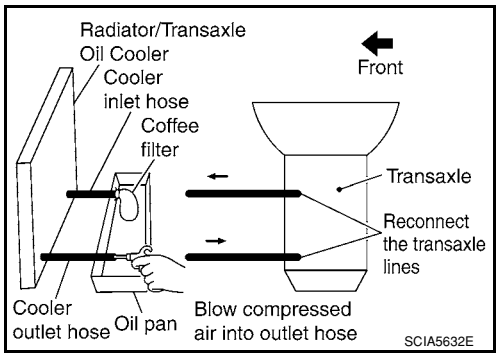

A/T FLUID COOLER INSPECTION PROCEDURE

1. Inspect the coffee filter for debris.

a. If small metal debris less than 1mm (0.040 in) in size or metal powder is found in the coffee filter, this is normal. If normal debris is found, the A/T fluid cooler/radiator can be re-used and the procedure is ended.

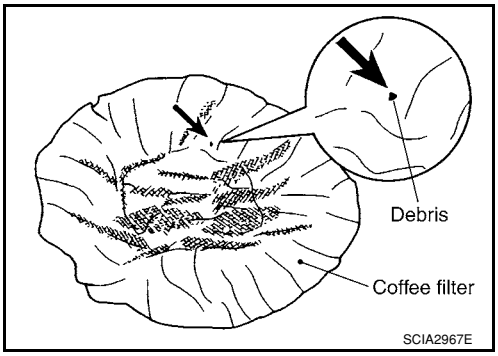

b. If one or more pieces of debris are found that are over 1mm (0.040 in) in size and/or peeled clutch facing material is found in the coffee filter, the A/T fluid cooler is not serviceable. The A/T fluid cooler/radiator must be replaced and the inspection procedure is ended. Refer to CO-11.

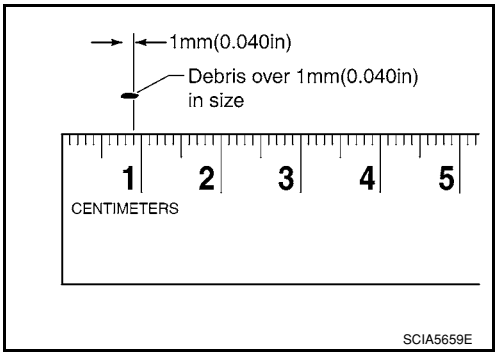

A/T FLUID COOLER FINAL INSPECTION

After performing all procedures, ensure that all remaining oil is cleaned from all components.

A/T CONTROL SYSTEM

Cross-Sectional View

INFOID:0000000001703161

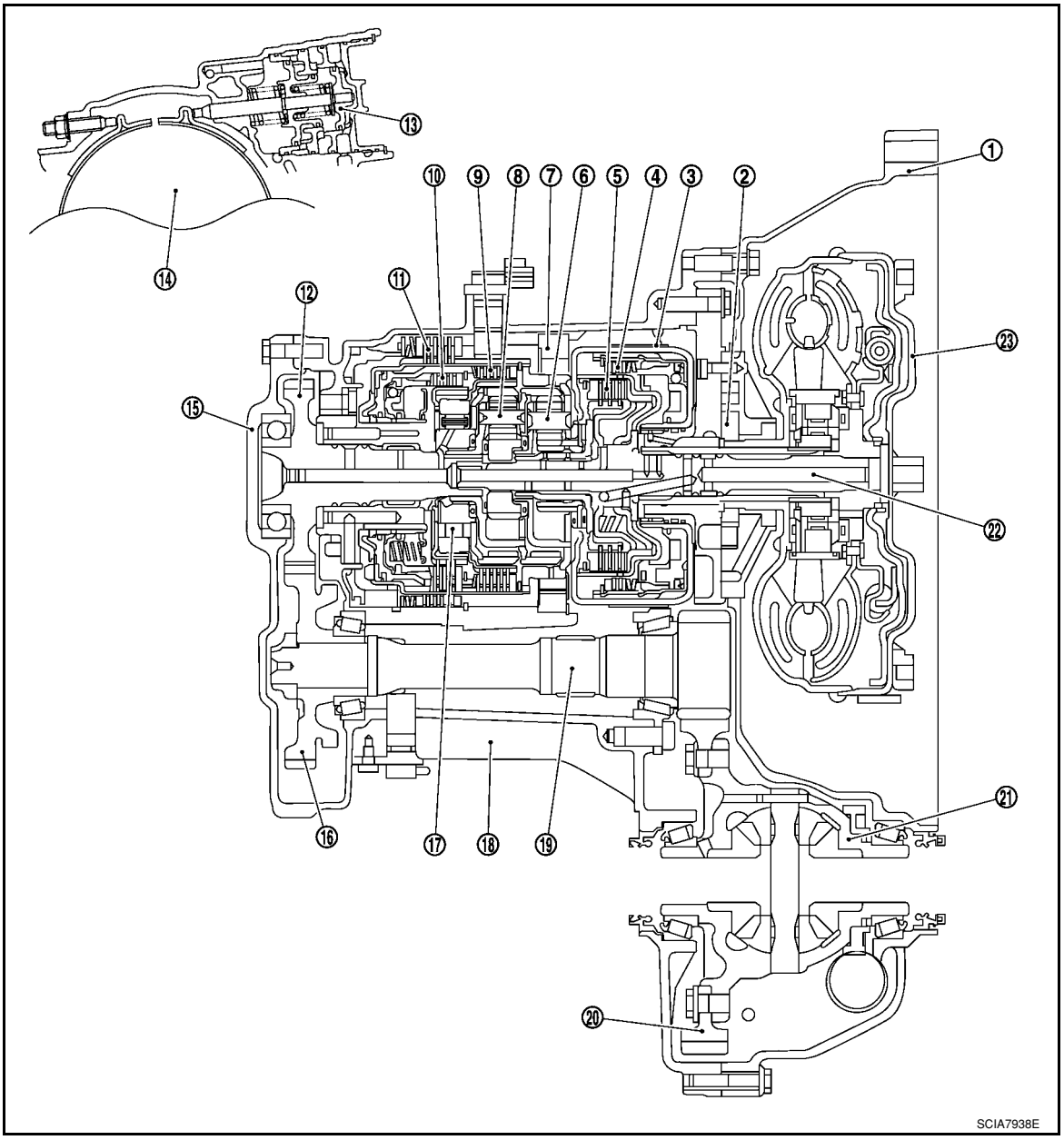

1. Converter housing	2. Oil pump	3. Brake band
4. Reverse clutch	5. High clutch	6. Front planetary gear
7. Low one-way clutch	8. Rear planetary gear	9. Forward clutch
10. Overrun clutch	11. Low & reverse brake	12. Output gear
13. Band servo piston	14. Reverse clutch drum	15. Side cover
16. Idler gear	17. Forward one-way clutch	18. Transaxle case
19. Reduction pinion gear	20. Final gear	21. Differential case
22. Input shaft	23. Torque converter	

Shift Mechanism

INFOID:0000000001703162

CONSTRUCTION

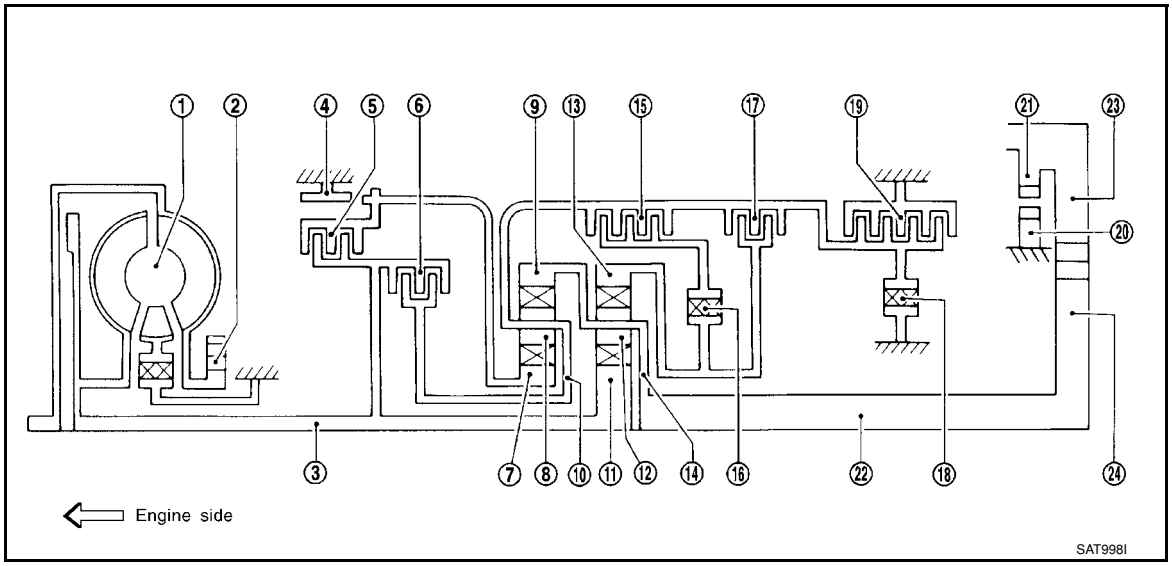

1.	Torque converter	2.	Oil pump	3.	Input shaft
4.	Brake band	5.	Reverse clutch	6.	High clutch
7.	Front sun gear	8.	Front pinion gear	9.	Front internal gear
10.	Front planetary carrier	11.	Rear sun gear	12.	Rear pinion gear
13.	Rear internal gear	14.	Rear planetary carrier	15.	Forward clutch
16.	Forward one-way clutch	17.	Overrun clutch	18.	Low one-way clutch
19.	Low & reverse brake	20.	Parking pawl	21.	Parking gear
22.	Output shaft	23.	Idle gear	24.	Output gear

FUNCTION OF CLUTCH AND BRAKE

Clutch and brake components	Abbr.	Function
5 Reverse clutch	R/C	To transmit input power to front sun gear **7**.
6 High clutch	H/C	To transmit input power to front planetary carrier **10**.
15 Forward clutch	F/C	To connect front planetary carrier **10** with forward one-way clutch **16**.
17 Overrun clutch	O/C	To connect front planetary carrier **10** with rear internal gear **13**.
4 Brake band	B/B	To lock front sun gear **7**.
16 Forward one-way clutch	F/O.C	When forward clutch **15** is engaged, to stop rear internal gear **13** from rotating in opposite direction against engine revolution.
18 Low one-way clutch	L/O.C	To stop front planetary carrier **10** from rotating in opposite direction against engine revolution.
19 Low & reverse brake	L & R/B	To lock front planetary carrier **10**.

CLUTCH AND BAND CHART

Shift position		R/C **5**	H/C **6**	F/C **15**	O/C **17**	Band servo			F/O.C **16**	L/O.C **18**	L&R/B **19**	Lock-up	Remarks
						2nd apply	3rd release	4th apply					
P													PARK POSITION
R		○									○		REVERSE POSITION
N													NEUTRAL POSITION
D*4	1st			○	*1D				B	B			

Shift position		R/C **5**	H/C **6**	F/C **15**	O/C **17**	Band servo			F/O.C **16**	L/O.C **18**	L&R/B **19**	Lock-up	Remarks
						2nd apply	3rd release	4th apply					
	2nd			○	*1A	○			B				Automatic shift 1 ⇔ 2 ⇔ 3 ⇔ 4
	3rd		○	○	*1A	*2C	C		B			*1○	
	4th		○	C		*3C	C	○				○	
2	1st			○	○				B	B			Automatic shift 1 ⇔ 2 ⇐ 3
	2nd			○	○	○			B				
	3rd		○	○	○	*2C	C		B				
1	1st			○	○				B	B	○		Locks (held stationary) in 1st speed 1 ⇐ 2 ⇐ 3
	2nd			○	○	○			B				
	3rd		○	○	○	*2C	C		B				

- *1: Operates when OD OFF. (OD OFF indicator lamp is on.)
- *2: Oil pressure is applied to both 2nd “apply” side and 3rd “release” side of band servo piston. However, brake band does not contract because oil pressure area on the “release” side is greater than that on the “apply” side.
- *3: Oil pressure is applied to 4th “apply” side on condition *2 above, and brake band contracts.
- *4: A/T will not shift to 4th when OD OFF. (OD OFF indicator lamp is on.)
- ○: Operates.
- A: Operates when throttle opening is less than specification**, activating engine brake.
- B: Operates during “progressive” acceleration.
- C: Operates but does not affect power transmission.
- D: Operates when throttle opening is less than specification**, but does not affect engine brake.
- **: Overrun clutch remains in engaged condition when throttle opening is less than 1/16.

POWER TRANSMISSION

“N” and “P” Positions

- “N” position
  Power from the input shaft is not transmitted to the output shaft because the clutches do not operate.
- “P” position
  Similar to the “N” position, the clutches do not operate. The parking pawl engages with the parking gear to mechanically hold the output shaft so that the power train is locked.

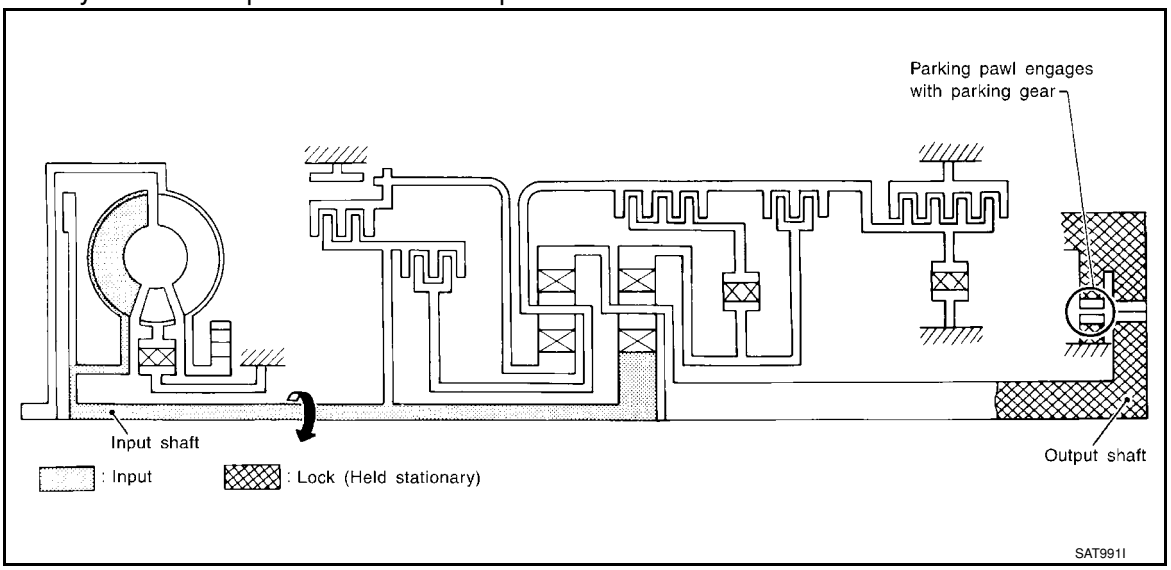

“11” Position

• **Forward clutch** • **Forward one-way clutch** • **Overrun clutch** • **Low & reverse brake**	As overrun clutch engages, rear internal gear is locked by the operation of low and reverse brake. This is different from that of D_1 and 2_1.
Engine brake	Overrun clutch always engages, therefore engine brake can be obtained when decelerating.

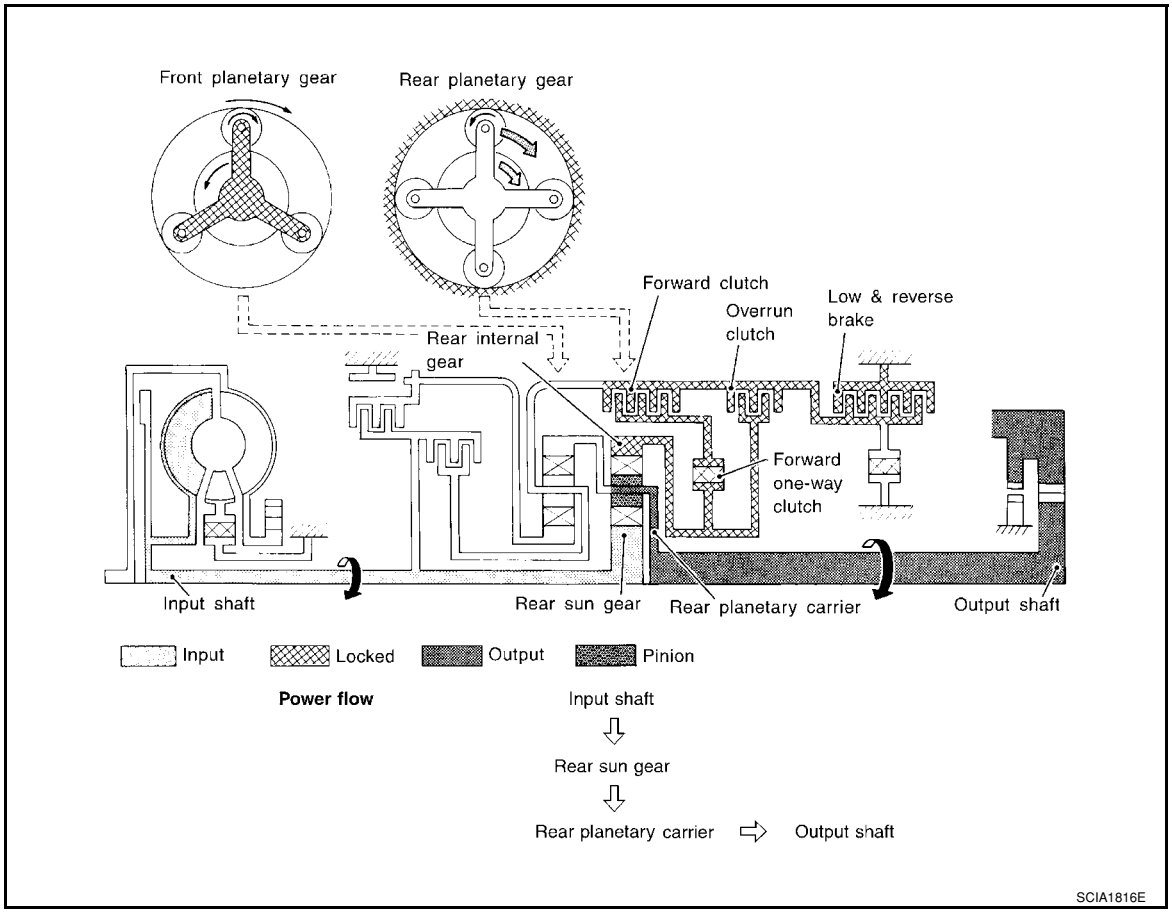

"D_1" and "2_1" Positions

• **Forward one-way clutch** • **Forward clutch** • **Low one-way clutch**	Rear internal gear is locked to rotate counterclockwise because of the functioning of these three clutches.
Overrun clutch engagement conditions (Engine brake)	D_1: OD OFF (OD OFF indicator lamp is on) and throttle opening is less than specification* 2_1: Always engaged At D_1 and 2_1 positions, engine brake is not activated due to free turning of low one- way clutch.

*: Overrun clutch remains in engaged condition when throttle opening is less than 1/16.

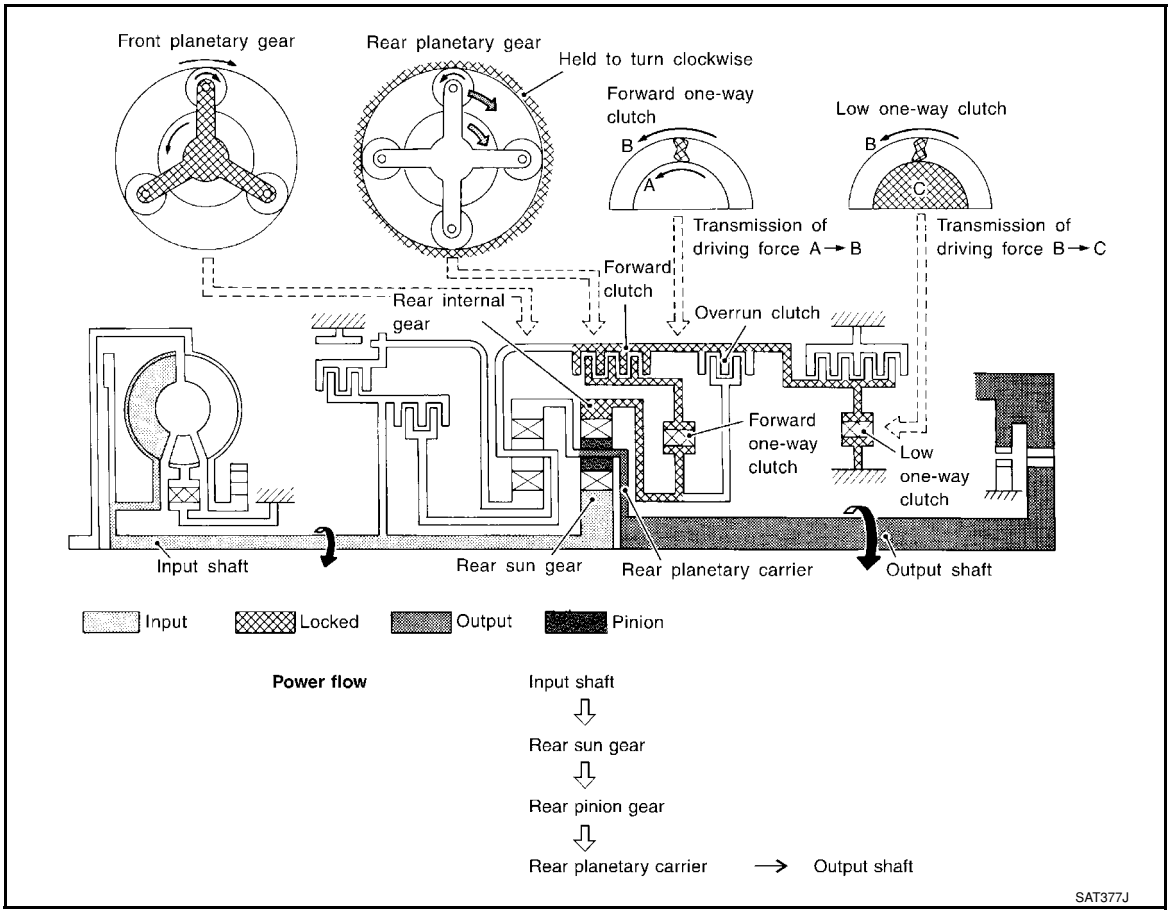

"D2", "22" and "12" Positions

• **Forward clutch** • **Forward one-way clutch** • **Brake band**	Rear sun gear drives rear planetary carrier and combined front internal gear. Front internal gear now rotates around front sun gear accompanying front planetary carrier. As front planetary carrier transfers the power to rear internal gear through forward clutch and forward one-way clutch, this rotation of rear internal gear increases the speed of rear planetary carrier compared with that of the 1st speed.
Overrun clutch engagement conditions	D2: OD OFF (OD OFF indicator lamp is on) and throttle opening is less than specification* 22 and 12: Always engaged

*: Overrun clutch remains in engaged condition when throttle opening is less than 1/16.

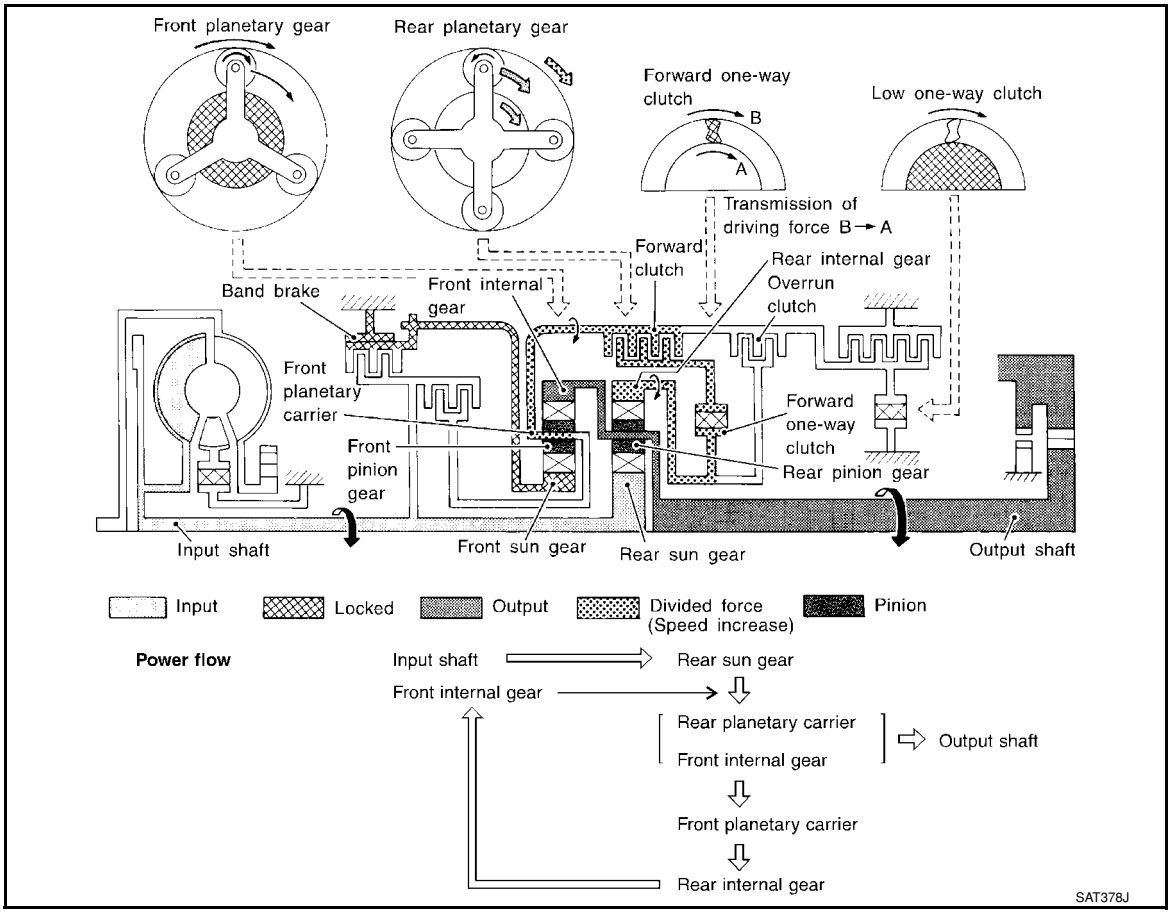

"D3", "23" and "13" Positions

• **High clutch** • **Forward clutch** • **Forward one-way clutch**	Input power is transmitted to front planetary carrier through high clutch. And front planetary carrier is connected to rear internal gear by operation of forward clutch and forward one-way clutch. This rear internal gear rotation and another input (the rear sun gear) accompany rear planetary carrier to turn at the same speed.
Overrun clutch engagement conditions	D3: OD OFF (OD OFF indicator lamp is on) and throttle opening is less than specification* 23 and 13: Always engaged

*: Overrun clutch remains in engaged condition when throttle opening is less than 1/16.

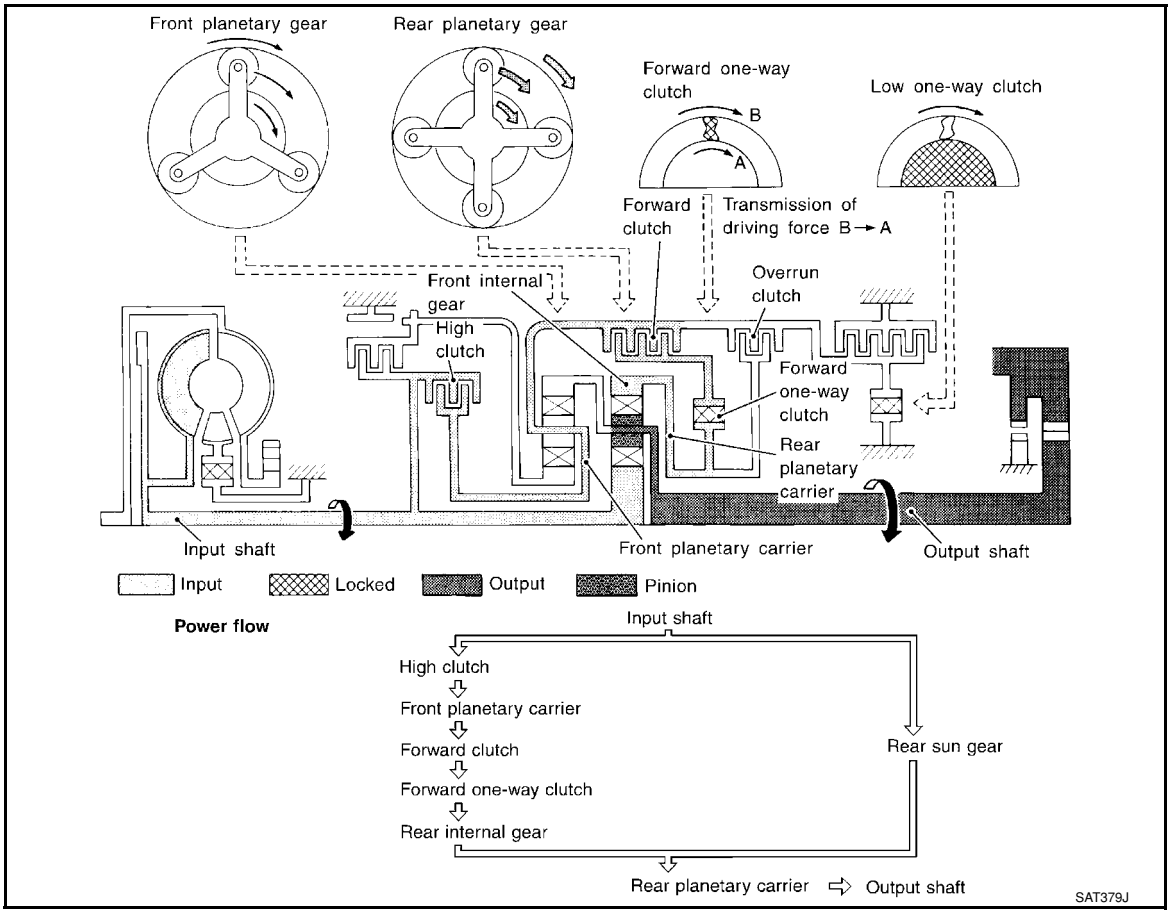

"D4" (OD) Position

• **High clutch** • **Brake band** • **Forward clutch** (Does not affect power transmission)	Input power is transmitted to front carrier through high clutch. This front carrier turns around the sun gear which is fixed by brake band and makes front internal gear (output) turn faster.
Engine brake	At D4 position, there is no one-way clutch in the power transaxle line and engine brake can be obtained when decelerating.

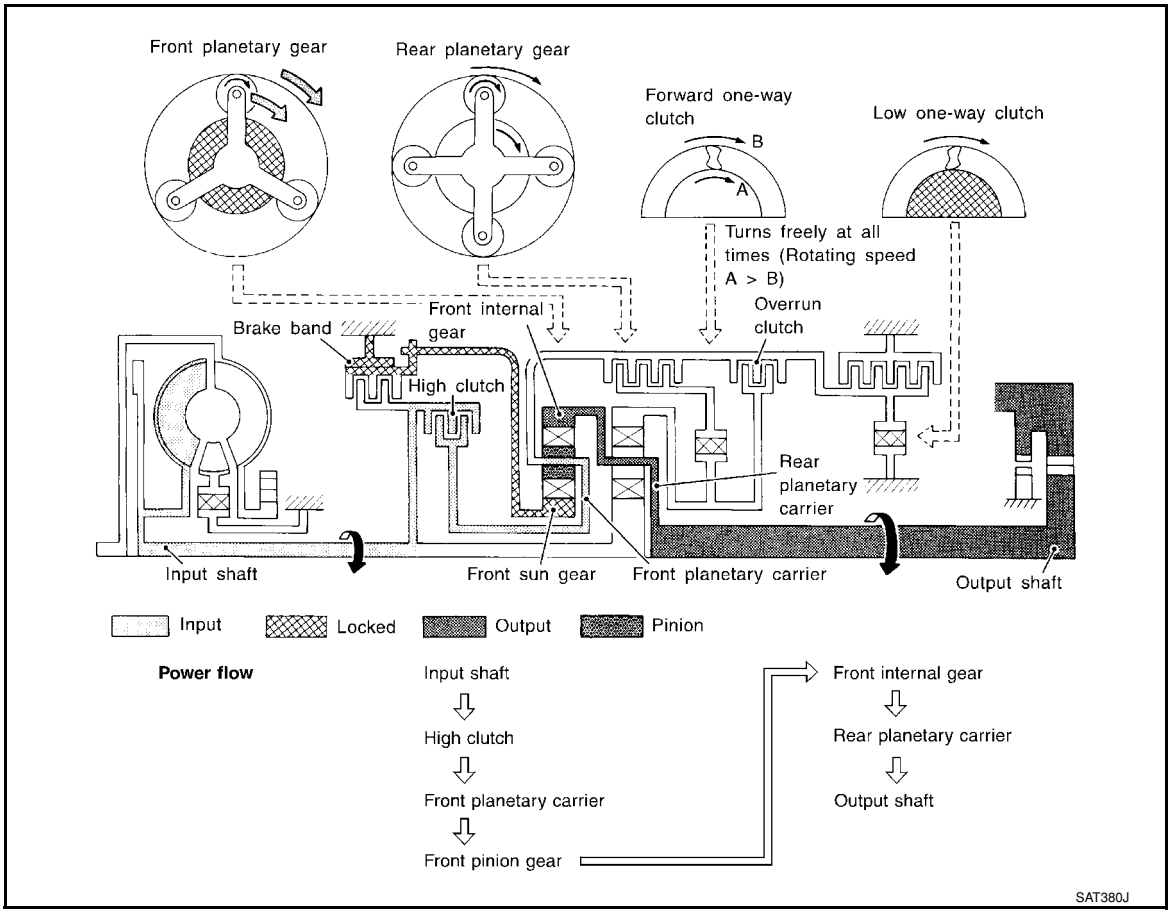

"R" Position

• **Reverse clutch** • **Low & reverse brake**	Front planetary carrier is stationary because of the operation of low and reverse brake. Input power is transmitted to front sun gear through reverse clutch, which drives front internal gear in the opposite direction.
Engine brake	As there is no one-way clutch in the power transaxle line, engine brake can be obtained when decelerating.

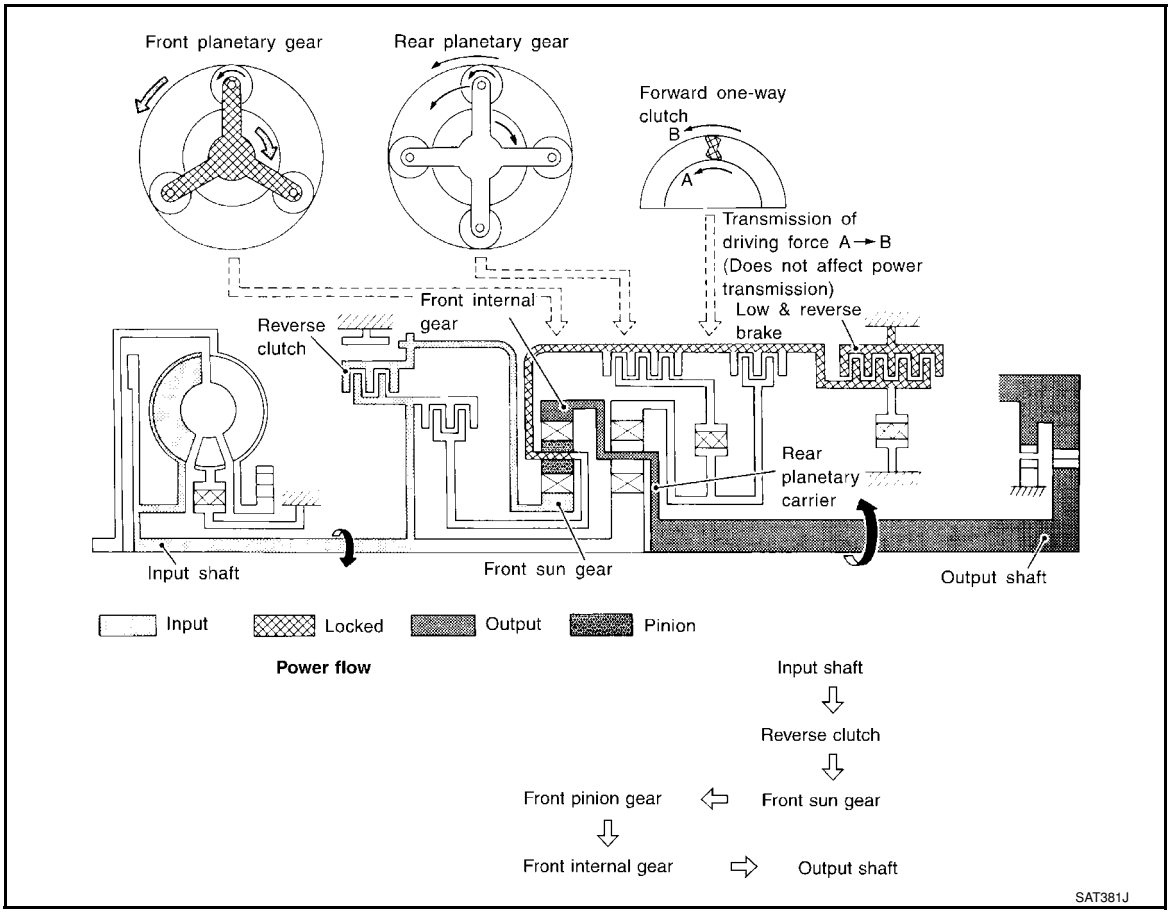

TCM Function

INFOID:0000000001703163

The function of the TCM is to:
- Receive input signals sent from various switches and sensors.
- Determine required line pressure, shifting point, lock-up operation, and engine brake operation.
- Send required output signals to the respective solenoids.

CONTROL SYSTEM OUTLINE

The automatic transaxle senses vehicle operating conditions through various sensors or signals. It always controls the optimum shift position and reduces shifting and lock-up shocks.

SWITCHES & SENSORS		TCM		ACTUATORS
PNP switch Accelerator pedal position signal Closed throttle position signal Wide open throttle position signal Engine speed signal A/T fluid temperature sensor Revolution sensor Turbine revolution sensor (Power train revolution sensor) Vehicle speed sensor Overdrive control switch signal Stop lamp switch signal	⇒	Shift control Line pressure control Lock-up control Overrun clutch control Fail-safe control Self-diagnosis CONSULT-III communication line control	⇒	Shift solenoid valve A Shift solenoid valve B Overrun clutch solenoid valve Torque converter clutch solenoid valve Line pressure solenoid valve OD OFF indicator lamp

CONTROL SYSTEM DIAGRAM

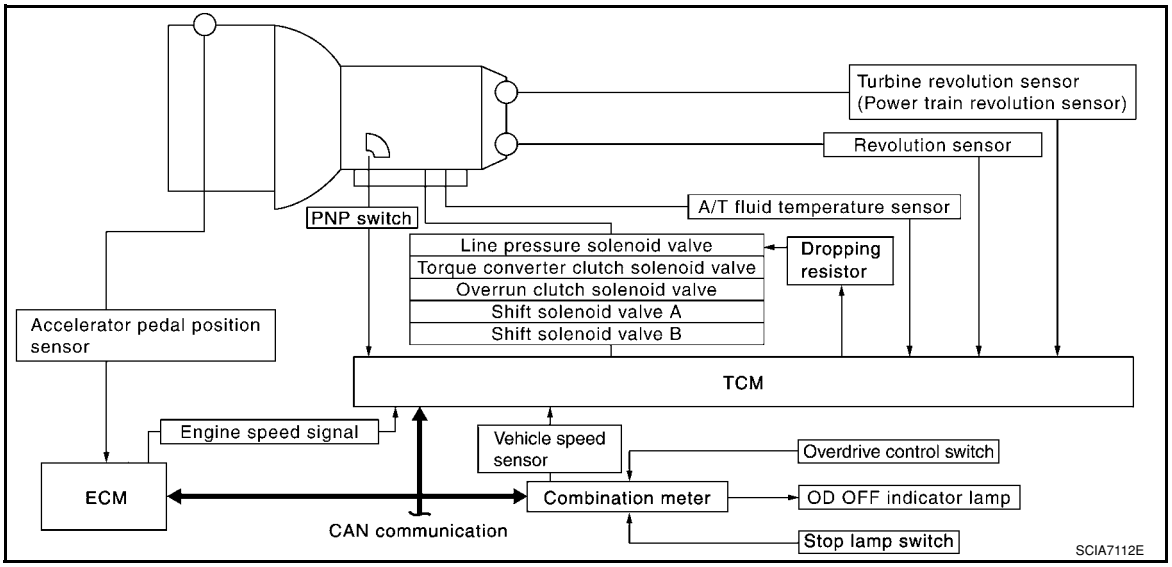

CAN Communication

INFOID:0000000001703164

SYSTEM DESCRIPTION

CAN (Controller Area Network) is a serial communication line for real time application. It is an on-vehicle multiplex communication line with high data communication speed and excellent error detection ability. Many electronic control units are equipped onto a vehicle, and each control unit shares information and links with other control units during operation (not independent). In CAN communication, control units are connected with 2 communication lines (CAN H line, CAN L line) allowing a high rate of information transmission with less wiring. Each control unit transmits/receives data but selectively reads required data only. For details, refer to LAN-6, "System Description".

Input/Output Signal of TCM

INFOID:0000000001703165

Control item		Line pressure control	Vehicle speed control	Shift control	Lock-up control	Engine brake control	Fail-safe function	Self-diagnostics function
Input	Accelerator pedal position signal(*5)	X	X	X	X	X	(*3) X	X
	Vehicle speed sensor·A/T (Revolution sensor)	X	X	X	X	X	(*3) X	X
	Vehicle speed sensor·MTR	(*1) X	(*1) X	(*1) X	(*1) X			X
	Closed throttle position signal(*5)	(*2) X	(*2) X		X	X		(*4) X
	Wide open throttle position signal(*5)	(*2) X	(*2) X					(*4) X
	Turbine revolution sensor (Power train revolution sensor)	X	X		X		X	X
	Engine speed signal		X		X		X	X
	PNP switch	X	X	X	X	X	(*3) X	(*4) X
	Stop lamp switch signal(*5)		X		X			(*4) X
	A/T fluid temperature sensors(*5)	X	X	X	X		X	X
	Overdrive control switch signal(*5)		X	X	X	X		(*4) X
	TCM power supply voltage signal	X			X		X	X

Control item		Line pressure control	Vehicle speed control	Shift control	Lock-up control	Engine brake control	Fail-safe function	Self-diagnostics function
Output	Shift solenoid valve A/B		X				(*3) X	X
	Line pressure solenoid	X					(*3) X	X
	Torque converter clutch solenoid valve				X		(*3) X	X
	Overrun clutch solenoid valve		X			X	(*3) X	X
	OD OFF indicator lamp(*6)		X					X

*1: Spare for vehicle speed sensor·A/T (revolution sensor)

*2: Spare for accelerator pedal position signal

*3: If these input and output signals are different, the TCM triggers the fail-safe function.

*4: Used as a condition for starting self-diagnostics; if self-diagnosis are not started, it is judged that there is some kind of error.

*5: Input by CAN communications.

*6: Output by CAN communications.

Line Pressure Control

INFOID:0000000001703166

- TCM has various line pressure control characteristics to match the driving conditions.
- An ON-OFF duty signal is sent to the line pressure solenoid valve based on TCM characteristics.
- Hydraulic pressure on the clutch and brake is electronically controlled through the line pressure solenoid valve to accommodate engine torque. This results in smooth shift operation.

NORMAL CONTROL

The characteristic of the line pressure to the throttle opening is set for suitable clutch operation.

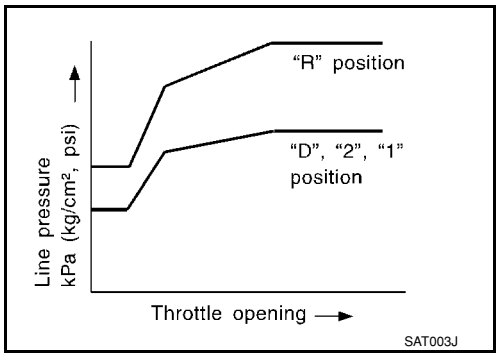

BACK-UP CONTROL (ENGINE BRAKE)

If the selector lever is shifted to "2" position while driving in D4 or D3, great driving force is applied to the clutch inside the transaxle. Clutch operating pressure (line pressure) must be increased to deal with this driving force.

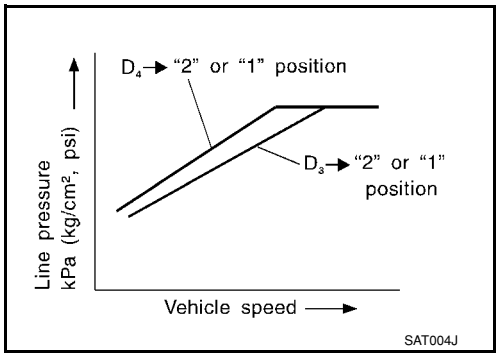

DURING SHIFT CHANGE

The line pressure is temporarily reduced corresponding to a change in engine torque when shifting gears (that is, when the shift solenoid valve is switched for clutch operation) to reduce shifting shock.

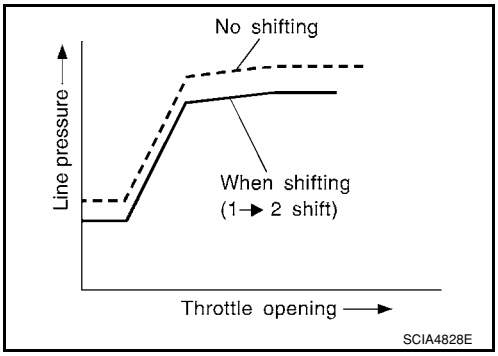

AT LOW FLUID TEMPERATURE

- A/T fluid viscosity and frictional characteristics of the clutch facing change with A/T fluid temperature. Clutch engaging or band-contacting pressure is compensated for, according to A/T fluid temperature, to stabilize shifting quality.
- The line pressure is reduced below 60°C (140°F) to prevent shifting shock due to high viscosity of A/T fluid when temperature is low.

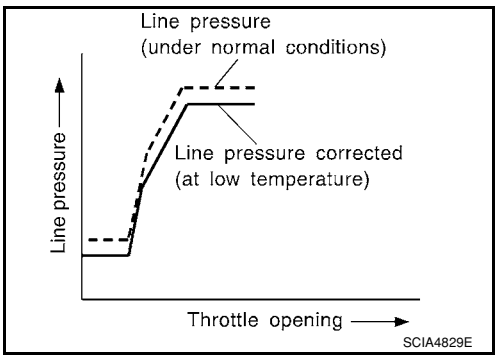

- Line pressure is increased to a maximum irrespective of the throttle opening when A/T fluid temperature drops to –10°C (14°F). This pressure rise is adopted to prevent a delay in clutch and brake operation due to extreme drop of A/T fluid viscosity at low temperature.

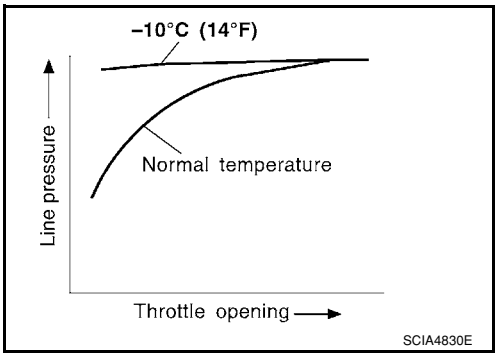

Shift Control

INFOID:0000000001703167

The shift is regulated entirely by electronic control to accommodate vehicle speed and varying engine operations. This is accomplished by electrical signals transmitted by the revolution sensor and the ECM (accelerator pedal position sensor). This results in improved acceleration performance and fuel economy.

CONTROL OF SHIFT SOLENOID VALVES A AND B

The TCM activates shift solenoid valves A and B according to signals from the accelerator pedal position sensor and revolution sensor to select the optimum gear position on the basis of the shift schedule memorized in the TCM.
The shift solenoid valve performs simple ON-OFF operation. When set to “ON”, the drain circuit closes and pilot pressure is applied to the shift valve.

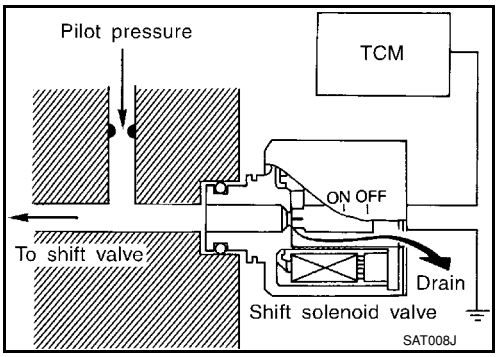

RELATION BETWEEN SHIFT SOLENOID VALVES A AND B AND GEAR POSITIONS

Gear position	1	2	3	4
Shift solenoid valve A	ON (Closed)	OFF (Open)	OFF (Open)	ON (Closed)
Shift solenoid valve B	ON (Closed)	ON (Closed)	OFF (Open)	OFF (Open)

CONTROL OF SHIFT VALVES A AND B

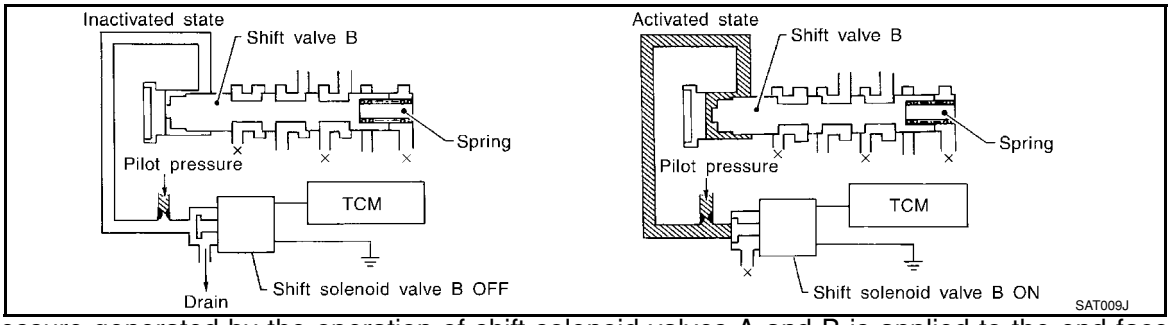

Pilot pressure generated by the operation of shift solenoid valves A and B is applied to the end face of shift valves A and B.
The figure above shows the operation of shift valve B. When the shift solenoid valve is “ON”, pilot pressure applied to the end face of the shift valve overcomes spring force, moving the valve upward.

Lock-up Control

INFOID:0000000001703168

The torque converter clutch piston in the torque converter is locked to eliminate torque converter slip and to increase power transmission efficiency. The solenoid valve is controlled by an ON-OFF duty signal sent from the TCM. The signal is converted to an oil pressure signal which controls the torque converter clutch piston.

CONDITIONS FOR LOCK-UP OPERATION

When vehicle is driven in 3rd and 4th gear positions, vehicle speed and throttle opening are detected. If the detected values fall within the lock-up zone memorized in the TCM, lock-up is performed.

OD	ON	OFF
Selector lever	“D” position	
Gear position	D_4	D_3
Vehicle speed sensor	More than set value	
Accelerator pedal position signal	Less than set opening	
Closed throttle position signal	OFF	
A/T fluid temperature sensor	More than 40°C (104°F)	

TORQUE CONVERTER CLUTCH SOLENOID VALVE CONTROL

Lock-up Control System Diagram

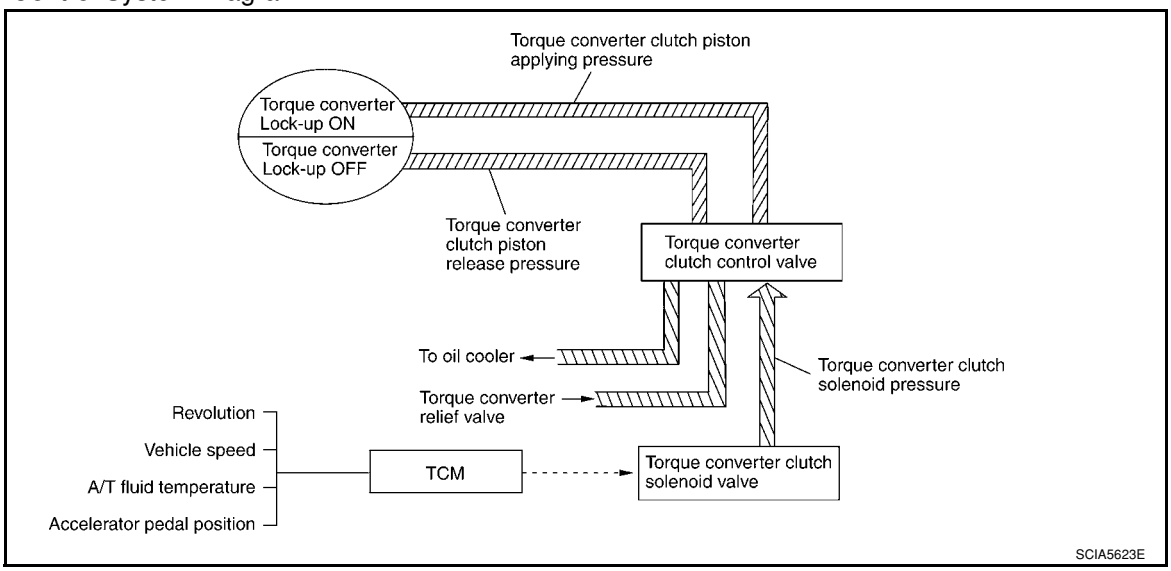

Lock-up Released

In the lock-up released state, the torque converter clutch control valve is set into the unlocked state by draining the torque converter clutch piston applying pressure and the torque converter clutch piston release pressure is generated.

In this way, the torque converter clutch piston is not coupled.

Lock-up Applied

In the lock-up applied state, the torque converter clutch control valve is set into the locked state by generating the torque converter clutch piston applying pressure and the torque converter clutch piston release pressure is drained.

In this way, the torque converter clutch piston is pressed and coupled.

SMOOTH LOCK-UP CONTROL

When shifting from the lock-up released state to the lock-up applied state, the current output to the torque converter clutch solenoid is controlled with the TCM. In this way, when shifting to the lock-up applied state, the torque converter clutch is temporarily set to the half-clutched state to reduce the shock.

Half-clutched State

The current output from the TCM to the torque converter clutch solenoid is varied to steadily increase the torque converter clutch solenoid pressure.

In this way, the lock-up applying pressure gradually rises and while the torque converter clutch piston is put into half-clutched status, the torque converter clutch piston applying pressure is increased and the coupling is completed smoothly.

Engine Brake Control (Overrun Clutch Control)

INFOID:0000000001703169

Forward one-way clutch is used to reduce shifting shocks in downshifting operations. This clutch transmits engine torque to the wheels. However, drive force from the wheels is not transmitted to the engine because the one-way clutch rotates idle. This means the engine brake is not effective.

The overrun clutch operates when the engine brake is needed.

OVERRUN CLUTCH OPERATING CONDITIONS

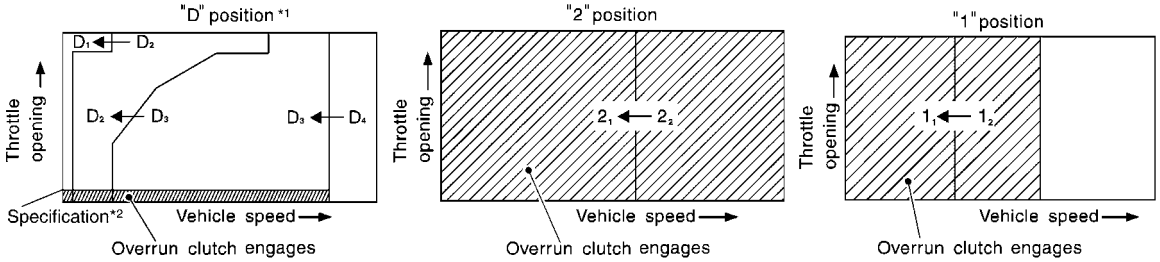

Selector lever position	Gear position	Throttle opening
"D" position *1	D_1,D_2,D_3 gear position	Less than specification *2
"2" position	2_1,2_2 gear position	At any position
"1" position	1_1,1_2 gear position	

*1 : When OD OFF (OD OFF indicator lamp is on.)
*2 : Overrun clutch remains in engaged condition when throttle opening is less than 1/16.

SCIA7186E

OVERRUN CLUTCH SOLENOID VALVE CONTROL

The overrun clutch solenoid valve is operated by an ON-OFF signal transmitted by the TCM to provide overrun clutch control (engine brake control).
When this solenoid valve is "ON", the pilot pressure drain port closes. When it is "OFF", the drain port opens.
During the solenoid valve "ON" pilot pressure is applied to the end face of the overrun clutch control valve.

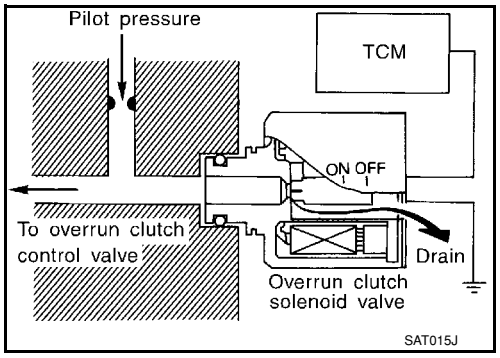

OVERRUN CLUTCH CONTROL VALVE OPERATION

When the solenoid valve is "ON", pilot pressure is applied to the overrun clutch control valve. This pushes up the overrun clutch control valve. The line pressure is then shut off so that the clutch does not engage. Only in "1" position, however, 1 range pressure is applied to overrun clutch control valve, resulting in valve moving downward and clutch engaged.
When the solenoid valve is "OFF", pilot pressure is not generated. At this point, the overrun clutch control valve moves downward by spring force. As a result, overrun clutch operation pressure is provided by the overrun clutch reducing valve. At overrun clutch reducing valve in "D" position, the hydraulic pressure is reduced to a level that balances the spring force. This is sent to overrun clutch control valve and becomes the operating pressure of overrun clutch which is engaged at all times. In "2" position and "1" position, overrun clutch reducing valve is pushed down by 2 range pressure. Line pressure is directly sent to overrun clutch control valve and becomes the operating pressure of overrun clutch which is engaged at all times.

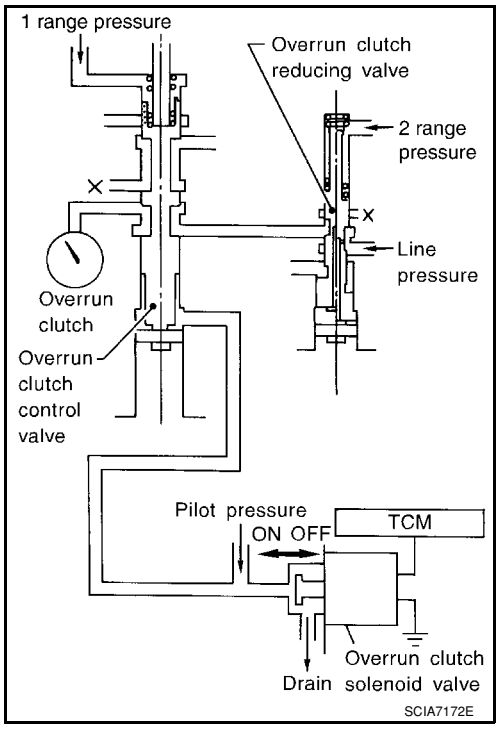

Control Valve

INFOID:0000000001703170

FUNCTION OF CONTROL VALVES

Valve name	Function
Pressure regulator valve, plug and sleeve plug	Regulates oil discharged from the oil pump to provide optimum line pressure for all driving conditions.
Pressure modifier valve and sleeve	Used as a signal supplementary valve to the pressure regulator valve. Regulates pressure-modifier pressure (signal pressure) which controls optimum line pressure for all driving conditions.
Pilot valve	Regulates line pressure to maintain a constant pilot pressure level which controls lock-up mechanism, overrun clutch, shift timing.
Accumulator control valve	Regulates accumulator back-pressure to pressure suited to driving conditions.
Manual valve	Directs line pressure to oil circuits corresponding to select positions. Hydraulic pressure drains when the shift lever is in Neutral.
Shift valve A	Simultaneously switches three oil circuits using output pressure of shift solenoid valve A to meet driving conditions (vehicle speed, throttle opening, etc.). Provides automatic downshifting and upshifting (1st → 2nd → 3rd → 4th gears/4th → 3rd → 2nd → 1st gears) in combination with shift valve B.
Shift valve B	Simultaneously switches two oil circuits using output pressure of shift solenoid valve B in relation to driving conditions (vehicle speed, throttle opening, etc.). Provides automatic downshifting and upshifting (1st → 2nd → 3rd → 4th gears/4th → 3rd → 2nd → 1st gears) in combination with shift valve A.
Overrun clutch control valve	Switches hydraulic circuits to prevent engagement of the overrun clutch simultaneously with application of the brake band in D_4. (Interlocking occurs if the overrun clutch engages during D_4.)
1st reducing valve	Reduces low & reverse brake pressure to dampen engine-brake shock when downshifting from the 1st position 1_2 to 1_1.
Overrun clutch reducing valve	Reduces oil pressure directed to the overrun clutch and prevents engine-brake shock. In the 1st and 2nd positions, line pressure acts on the overrun clutch reducing valve to increase the pressure-regulating point, with resultant engine brake capability.
Torque converter relief valve	Prevents an excessive rise in torque converter pressure.
Torque converter clutch control valve, plug and sleeve	Activates or inactivates the lock-up function. Also provides smooth lock-up through transient application and release of the lock-up system.
1-2 accumulator valve and piston	Lessens the shock find when the 2nd gear band servo contracts, and provides smooth shifting.
3-2 timing valve	Switches the pace that oil pressure is released depending on vehicle speed; maximizes the high clutch release timing, and allows for soft downshifting.
Shuttle valve	Determines if the overrun clutch solenoid valve should control the 3-2 timing valve or the overrun clutch control valve and switches between the two.
Cooler check valve	At low speeds and with a small load when a little heat is generated, saves the volume of cooler flow, and stores the oil pressure for lock-up.

Centrifugal Cancel Mechanism

INFOID:0000000001703171

FUNCTION

The centrifugal cancel mechanism is a mechanism to cancel the centrifugal hydraulic pressure instead of the conventional check balls. It cancels the centrifugal hydraulic pressure which is generated as high clutch drum rotates, and it allows for preventing high clutch from dragging and for providing stable high clutch piston pressing force in all revolution speeds.

STRUCTURE/OPERATION

A centrifugal cancel housing is provided to cancel the clutch housing pressure. The centrifugal cancel housing is always filled with ATF from the dedicated fluid passage of oil pump.

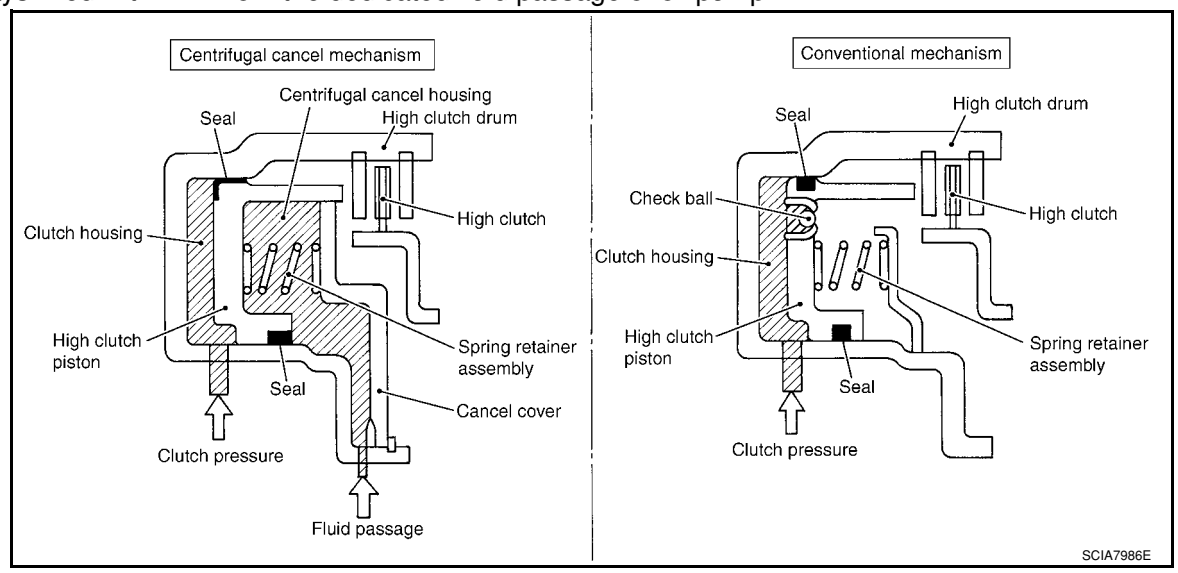

When Clutch Pressure Is Not Applied

As high clutch drum rotates, a centrifugal force applies to the remaining ATF in clutch housing to push high clutch piston. However, on the other hand, the centrifugal force also applies to ATF filled in centrifugal cancel housing, resulting in a force that pushes high clutch piston back. Consequently the high clutch piston does not move because both forces cancel each other, and thus high clutch is prevented from dragging.

When Clutch Pressure Is Applied

Clutch pressure that applies to clutch housing overcomes the fluid pressure and spring force of the opposing centrifugal housing to push high clutch piston, and high clutch is engaged. At this time, the centrifugal force caused by the revolution speed of high clutch drum has no impact any more since the centrifugal force that applies to the clutch pressure of clutch housing is canceled by the centrifugal force that applies to centrifugal cancel housing. As a result, high clutch piston pressing force is always stable in all revolution speeds, and thus smooth shifting characteristics are achieved.

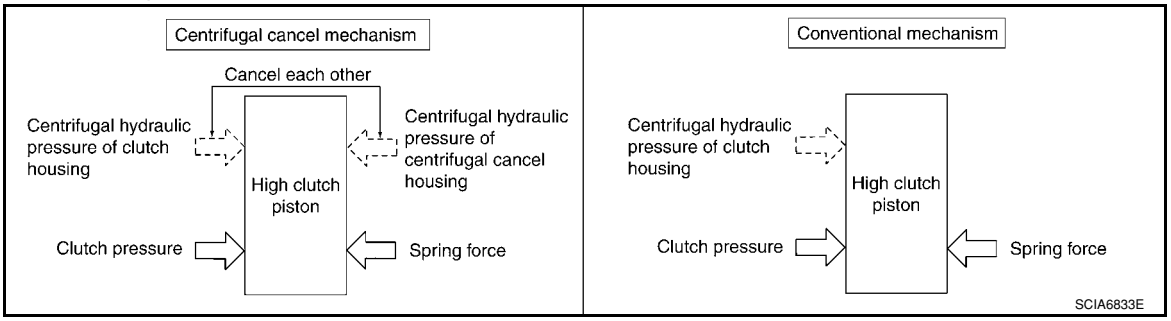

ON BOARD DIAGNOSTIC (OBD) SYSTEM

Introduction

INFOID:0000000001703172

A/T system has two self-diagnostic systems.
The first is emission-related on board diagnostic system (OBD-II) performed by the TCM in combination with the ECM. The malfunction is indicated by the MIL (malfunction indicator lamp) and is stored as a DTC in the ECM memory but not the TCM memory.
The second is the TCM original self-diagnosis indicated by the OD OFF indicator lamp. The malfunction is stored in the TCM memory. The detected items are overlapped with OBD-II self-diagnostic items. For detail, refer to AT-73, "CONSULT-III Function (A/T)" .

OBD-II Function for A/T System

INFOID:0000000001703173

The ECM provides emission-related on board diagnostic (OBD-II) functions for the A/T system. One function is to receive a signal from the TCM used with OBD-related parts of the A/T system. The signal is sent to the ECM when a malfunction occurs in the corresponding OBD-related part. The other function is to indicate a diagnostic result by means of the MIL (malfunction indicator lamp) on the instrument panel. Sensors, switches and solenoid valves are used as sensing elements.
The MIL automatically illuminates in One or Two Trip Detection Logic when a malfunction is sensed in relation to A/T system parts.

One or Two Trip Detection Logic of OBD-II

INFOID:0000000001703174

ONE TRIP DETECTION LOGIC

If a malfunction is sensed during the first test drive, the MIL will illuminate and the malfunction will be stored in the ECM memory as a DTC. The TCM is not provided with such a memory function.

TWO TRIP DETECTION LOGIC

When a malfunction is sensed during the first test drive, it is stored in the ECM memory as a 1st trip DTC (diagnostic trouble code) or 1st trip freeze frame data. At this point, the MIL will not illuminate. — 1st trip
If the same malfunction as that experienced during the first test drive is sensed during the second test drive, the MIL will illuminate. — 2nd trip
The “trip” in the “One or Two Trip Detection Logic” means a driving mode in which self-diagnosis is performed during vehicle operation.

OBD-II Diagnostic Trouble Code (DTC)

INFOID:0000000001703175

HOW TO READ DTC AND 1ST TRIP DTC

DTC and 1st trip DTC can be read by the following methods.
(with CONSULT-III or GST) CONSULT-III or GST (Generic Scan Tool) Examples: P0705, P0720 etc.
These DTC are prescribed by SAE J2012.
(CONSULT-III also displays the malfunctioning component or system.)

- **1st trip DTC No. is the same as DTC No.**
- **Output of the diagnostic trouble code indicates that the indicated circuit has a malfunction. However, in case of the Mode II and GST, they do not indicate whether the malfunction is still occurring or occurred in the past and returned to normal.**
  CONSULT-III can identify them as shown below, therefore, CONSULT-III (if available) is recommended.

DTC or 1st trip DTC of a malfunction is displayed in SELF-DIAGNOSTIC RESULTS mode for “ENGINE” with CONSULT-III. Time data indicates how many times the vehicle was driven after the last detection of a DTC.

If the DTC is being detected currently, the time data will be “0”.

If a 1st trip DTC is stored in the ECM, the time data will be “1t”.

Freeze Frame Data and 1st Trip Freeze Frame Data
The ECM has a memory function, which stores the driving condition such as fuel system status, calculated load value, engine coolant temperature, short term fuel trim, long term fuel trim, engine speed and vehicle speed at the moment the ECM detects a malfunction.

Data which are stored in the ECM memory, along with the 1st trip DTC, are called 1st trip freeze frame data, and the data, stored together with the DTC data, are called freeze frame data and displayed on CONSULT-III or GST. The 1st trip freeze frame data can only be displayed on the CONSULT-III screen, not on the GST. For detail, refer to EC-109, "CONSULT-II Function (ENGINE)" .

Only one set of freeze frame data (either 1st trip freeze frame data of freeze frame data) can be stored in the ECM. 1st trip freeze frame data is stored in the ECM memory along with the 1st trip DTC. There is no priority for 1st trip freeze frame data and it is updated each time a different 1st trip DTC is detected. However, once freeze frame data (2nd trip detection/MIL on) is stored in the ECM memory, 1st trip freeze frame data is no longer stored. Remember, only one set of freeze frame data can be stored in the ECM. The ECM has the following priorities to update the data.

Priority	Items	
1	Freeze frame data	Misfire — DTC: P0300 - P0306 Fuel Injection System Function — DTC: P0171, P0172, P0174, P0175
2		Except the above items (Includes A/T related items)
3	1st trip freeze frame data	

Both 1st trip freeze frame data and freeze frame data (along with the DTC) are cleared when the ECM memory is erased.

HOW TO ERASE DTC

The diagnostic trouble code can be erased by CONSULT-III, GST or ECM DIAGNOSTIC TEST MODE as described following.

- **If the battery cable is disconnected, the diagnostic trouble code will be cleared within 24 hours.**
- **When you erase the DTC, using CONSULT-III or GST is easier and quicker than switching the mode selector on the ECM.**

The following emission-related diagnostic information is cleared from the ECM memory when erasing DTC related to OBD-II. For details, refer to EC-47, "Emission-related Diagnostic Information" .

- **Diagnostic trouble codes (DTC)**
- **1st trip diagnostic trouble codes (1st trip DTC)**
- **Freeze frame data**
- **1st trip freeze frame data**
- **System readiness test (SRT) codes**
- **Test values**

HOW TO ERASE DTC (WITH CONSULT-III)

- **If a DTC is displayed for both ECM and TCM, it is necessary to be erased for both ECM and TCM.**

1. If the ignition switch stays ON after repair work, be sure to turn ignition switch OFF once. Wait at least 10 seconds and then turn it ON (engine stopped) again.
2. Turn CONSULT-III “ON” and touch “A/T”.
3. Touch “SELF-DIAG RESULTS”.
4. Touch “ERASE”. (The DTC in the TCM will be erased.) Then touch “BACK” twice.
5. Touch “ENGINE”.
6. Touch “SELF-DIAG RESULTS”.
7. Touch “ERASE”. (The DTC in the ECM will be erased.)

HOW TO ERASE DTC (WITH GST)

1. If the ignition switch stays ON after repair work, be sure to turn ignition switch OFF once. Wait at least 10 seconds and then turn it ON (engine stopped) again.
2. Perform “TCM SELF-DIAGNOSTIC PROCEDURE (No Tools)”. Refer to AT-78, "Diagnosis Procedure without CONSULT-III" . (The engine warm-up step can be skipped when performing the diagnosis only to erase the DTC.)
3. Select Mode 4 with Generic Scan Tool (GST). For details, refer to EC-119, "Generic Scan Tool (GST) Function" .

HOW TO ERASE DTC (NO TOOLS)

The OD OFF indicator lamp is located on the combination meter.

1. If the ignition switch stays ON after repair work, be sure to turn ignition switch OFF once. Wait at least 10 seconds and then turn it ON (engine stopped) again.
2. Perform “TCM SELF-DIAGNOSTIC PROCEDURE (No Tools)”. Refer to AT-78, "Diagnosis Procedure without CONSULT-III" . (The engine warm-up step can be skipped when performing the diagnosis only to erase the DTC.)
3. Perform “OBD-II SELF-DIAGNOSTIC PROCEDURE (No tools)”. Refer to EC-47, "Emission-related Diagnostic Information" .

Malfunction Indicator Lamp (MIL)

INFOID:0000000001703176

DESCRIPTION

The MIL is located on the instrument panel.

1. The MIL will light up when the ignition switch is turned ON without the engine running. This is a bulb check.
   - If the MIL does not light up, refer to DI-21 , or see EC-546 .
2. When the engine is started, the MIL should go off.
   - If the MIL remains on, the on board diagnostic system has detected an engine system malfunction.

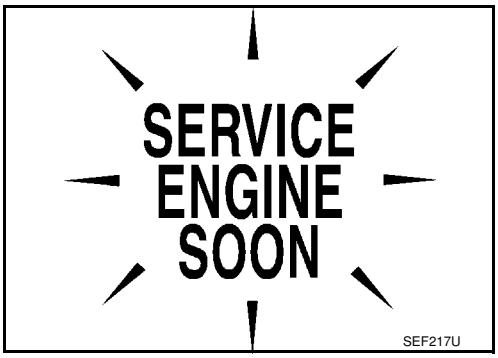

TROUBLE DIAGNOSIS

DTC Inspection Priority Chart

INFOID:0000000001703177

If some DTCs are displayed at the same time, perform inspections one by one based on the following priority chart.

NOTE:
If DTC "CAN COMM CIRCUIT" is displayed with other DTCs, first perform the trouble diagnosis for DTC "CAN COMM CIRCUIT". Refer to AT-83 .

Priority	Detected items
1	CAN communication line
2	Except above

Fail-Safe

INFOID:0000000001703178

The TCM has an electronic Fail-safe mode. This allows the vehicle to be driven even if a major electrical input/output device circuit is damaged.
Under Fail-Safe, the vehicle always runs in third gear, even with a shift lever position of "1", "2" or "D". The customer may complain of sluggish or poor acceleration.
Always follow the "AT-40, "How to Perform Trouble Diagnosis for Quick and Accurate Repair" ".
The SELF-DIAGNOSIS results will be as follows:
- The first SELF-DIAGNOSIS will indicate damage to the vehicle speed sensor or the revolution sensor.
- During the next SELF-DIAGNOSIS, performed after checking the sensor, no damages will be indicated.

FAIL-SAFE FUNCTION

The following fail-safe functions allow vehicles to be driven even when sensor, switch or solenoid malfunction occurs.

Vehicle Speed Sensor·A/T (Revolution Sensor)
Vehicle speed sensor·MTR signal is input from combination meter.

Accelerator Pedal Position Signal and Throttle Position Signal
TCM controls the throttle opening angle to a predetermined fixed position to enable driving if a malfunctioning signal is input to TCM.

PNP Switch
When the multiple PNP switch signals are input to TCM, the priority of selector lever position becomes "D", "N", "R", "2" and "1" in order by internal TCM determination.
The use of 4th gear is inhibited until normal operation resumes. Because the hydraulic circuit of the control valve is switched by manual valve according to the selector lever position, however, actual operating condition of vehicle becomes as follows.

Actual lever position	PNP switch input signal	Running status
"P"	"P" position and other position signals	P
"R"	"R" position and other position signals	R
"N"	"N" position and other position signals	N
"D"	"D" position and other position signals	$D_1 \Leftrightarrow D_2 \Leftrightarrow D_3 \Leftrightarrow D_4$
"2"	"2" position and other position signals (Except "1" position)	$2_1 \Leftrightarrow 2_2 \Leftrightarrow 2_3$
	"2" position and "1" position signals	$2_1 \Leftrightarrow 2_2$
"1"	"1" position and other position signals (Except "2" position)	$1_1 \Leftrightarrow 1_2 \Leftrightarrow 1_3$
	"1" position and "2" position signals	$1_1 \Leftrightarrow 1_2$

Shift Solenoid Valve A and B
If non-standard solenoid signal is sent to TCM, use of certain gears is limited. Refer to chart shown below.

Shift position	Normal			Malfunction in solenoid valve A			Malfunction in solenoid valve B			Malfunction in solenoid valves A and B		
	A	B	Gear	A	B	Gear	A	B	Gear	A	B	Gear
"D" position	●	●	1st	–	●→×	3rd	●→×	–	3rd	–	–	3rd
	×	●	2nd	–	●→×		×	–		–	–	
	×	×	3rd	–	x		×	–		–	–	
	●	×	4th	–	x		●→×	–		–	–	
"2" position	●	●	1st	–	●→×		●→×	–		–	–	
	×	●	2nd	–	●→×		×	–		–	–	
	×	×	3rd	–	x		×	–		–	–	
"1" position	●	●	1st	–	●→×		●→×	–		–	–	
	×	●	2nd	–	●→×		×	–		–	–	
	×	×	3rd	–	x		×	–		–	–	

●: Solenoid ON

×: Solenoid OFF

–: Non-standard condition

Line Pressure Solenoid Valve

If non-standard solenoid signal is sent to TCM, line pressure solenoid valve is turned OFF to achieve maximum oil pressure.

Torque Converter Clutch Solenoid Valve

If non-standard solenoid signal is sent to TCM, torque converter clutch solenoid valve is turned OFF to release lock-up.

Overrun Clutch Solenoid Valve

If non-standard solenoid signal is sent to TCM, overrun clutch solenoid valve is turned OFF to engage overrun clutch. This will result in more effective engine brake during deceleration.

How to Perform Trouble Diagnosis for Quick and Accurate Repair

INFOID:0000000001703179

INTRODUCTION

The TCM receives a signal from the vehicle speed sensor, accelerator pedal position sensor or PNP switch and provides shift control or lock-up control via A/T solenoid valves.

The TCM also communicates with the ECM by means of a signal sent from sensing elements used with the OBD-related parts of the A/T system for malfunction-diagnostic purposes. The TCM is capable of diagnosing malfunctioning parts while the ECM can store malfunctions in its memory.

Input and output signals must always be correct and stable in the operation of the A/T system. The A/T system must be in good operating condition and be free of valve seizure, solenoid valve malfunction, etc.

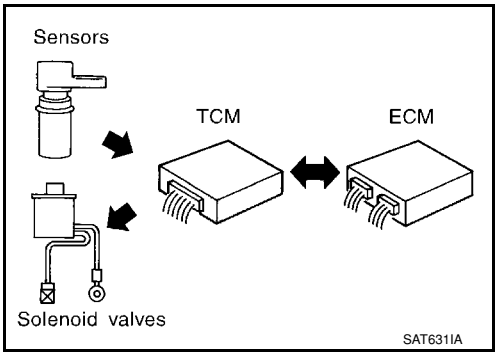

It is much more difficult to diagnose a malfunction that occurs intermittently rather than continuously. Most intermittent malfunctions are caused by poor electric connections or improper wiring. In this case, careful checking of suspected circuits may help prevent the replacement of good parts.

A visual check only, may not find the cause of the malfunctions. A road test with CONSULT-III or a circuit tester connected should be performed. Follow the "WORK FLOW" .
Before undertaking actual checks, take a few minutes to talk with a customer who approaches with a driveability complaint. The customer can supply good information about such malfunctions, especially intermittent ones. Find out what symptoms are present and under what conditions they occur. A “DIAGNOSTIC WORKSHEET” like the example ("DIAGNOSTIC WORKSHEET") should be used.
Start your diagnosis by looking for “conventional” malfunctions first. This will help troubleshoot driveability malfunctions on an electronically controlled engine vehicle.
Also check related Service bulletins for information.

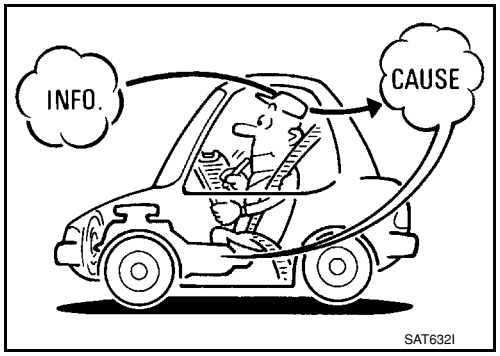

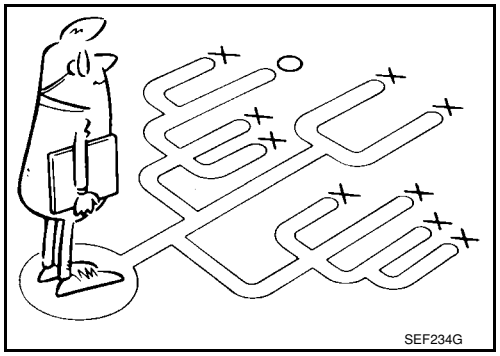

WORK FLOW

A good understanding of the malfunction conditions can make troubleshooting faster and more accurate. In general, each customer feels differently about a malfunction. It is important to fully understand the symptoms or conditions for a customer complaint.
Make good use of the two sheets provided, "Information from customer" and "Diagnostic Worksheet Chart" , to perform the best troubleshooting possible.

Work Flow Chart

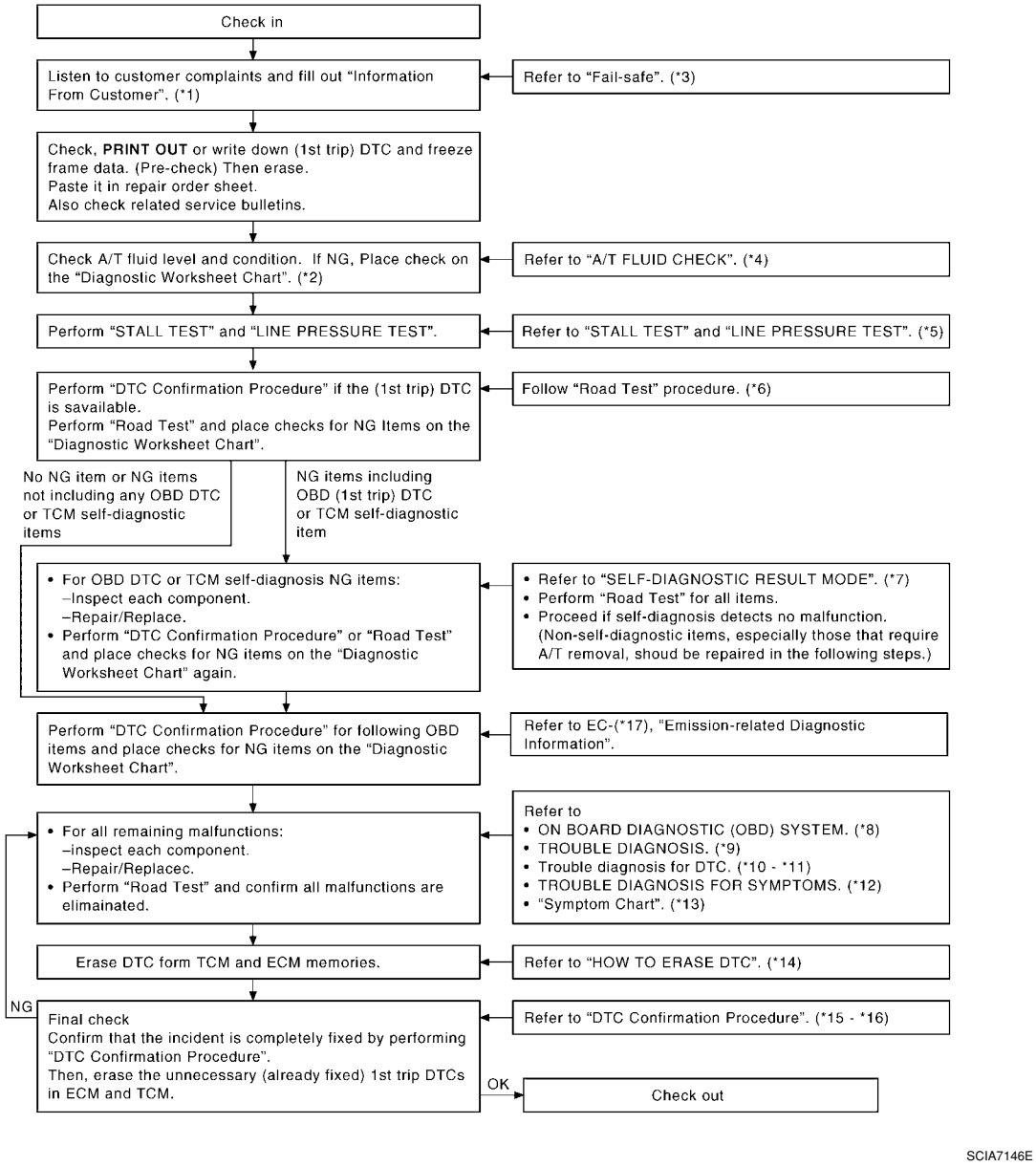

*1	"Information from customer"	*2	"Diagnostic Worksheet Chart"	*3	AT-39
*4	AT-48	*5	AT-48, AT-48	*6	AT-52
*7	AT-73	*8	AT-36	*9	AT-39
*10	AT-96	*11	AT-163	*12	AT-173
*13	AT-61	*14	AT-36	*15	AT-83
*16	AT-163	*17	EC-47		

DIAGNOSTIC WORKSHEET

Information from Customer

KEY POINTS

- **WHAT**..... Vehicle & A/T model
- **WHEN**..... Date, Frequencies
- **WHERE**..... Road conditions
- **HOW**..... Operating conditions, Symptoms

Customer name MR./MS	Model & Year	VIN
Trans. model	Engine	Mileage
Incident Date	Manuf. Date	In Service Date
Frequency	❑ Continuous ❑ Intermittent (times a day)	
Symptoms	❑ Vehicle does not move. (❑ Any position ❑ Particular position)	
	❑ No up-shift (❑ 1st → 2nd ❑ 2nd → 3rd ❑ 3rd → 4th)	
	❑ No down-shift (❑ 4th → 3rd ❑ 3rd → 2nd ❑ 2nd → 1st)	
	❑ Lock-up malfunction	
	❑ Shift point too high or too low.	
	❑ Shift shock or slip (❑ N → D ❑ Lock-up ❑ Any drive position)	
	❑ Noise or vibration	
	❑ No kick down	
	❑ No pattern select	
	❑ Others ( )	
Malfunction indicator lamp (MIL)	❑ Continuously lit	❑ Not lit

Diagnostic Worksheet Chart

1.	❑ Read the Fail-safe and listen to customer complaints.			AT-39, "Information from customer"
2.	❑ Check A/T fluid			MA-22
		❑ Leakage (Follow specified procedure) ❑ Fluid condition ❑ Fluid level		
3.	❑ Perform “STALL TEST” and “LINE PRESSURE TEST”.			AT-48, AT-48
		❑“STALL TEST”— Mark possible damaged components/others.		
		❑ Torque converter one-way clutch ❑ Reverse clutch ❑ Forward clutch ❑ Overrun clutch ❑ Forward one-way clutch	❑ Low & reverse brake ❑ Low one-way clutch ❑ Engine ❑ Line pressure is low ❑ Clutches and brakes except high clutch and brake band are OK	
		❑“LINE PRESSURE TEST”— Suspected parts:		

4.	❏ Perform “Road Test”.		AT-52
	4-1.	“Check Before Engine is Started”	AT-53
		❏AT-176, "OD OFF Indicator Lamp Does Not Come On" ❏ Perform self-diagnosis. Enter checks for detected items. AT-73 , AT-78 .	
		❏AT-83 . ❏AT-86 . ❏AT-91 . ❏AT-96 . ❏AT-101 . ❏AT-105 ❏AT-108 . ❏AT-111 . ❏AT-114 . ❏AT-119 . ❏AT-124 . ❏AT-129 . ❏AT-134 . ❏AT-139 . ❏AT-144 . ❏AT-149 . ❏AT-152 . ❏AT-158 . ❏AT-163 . ❏AT-164 .	
	4-2.	“Check at Idle”	AT-53
		❏AT-178, "Engine Cannot Be Started in "P" and "N" Position" . ❏AT-179, "In "P" Position, Vehicle Moves Forward or Backward When Pushed" . ❏AT-179, "In "N" Position, Vehicle Moves" . ❏AT-180, "Large Shock "N" → "R" Position" . ❏AT-181, "Vehicle Does Not Creep Backward in "R" Position" . ❏AT-182, "Vehicle Does Not Creep Forward in "D", "2" or "1" Position" .	

4.	4-3.	"Cruise Test"	AT-55
		Part 1	
		❑AT-183, "Vehicle Cannot Be Started from D_1" . ❑AT-185, "A/T Does Not Shift: $D_1 \rightarrow D_2$ or Does Not Kickdown: $D_4 \rightarrow D_2$" . ❑AT-186, "A/T Does Not Shift: $D_2 \rightarrow D_3$" . ❑AT-188, "A/T Does Not Shift: $D_3 \rightarrow D_4$" . ❑AT-189, "A/T Does Not Perform Lock-up" . ❑AT-190, "A/T Does Not Hold Lock-up Condition" . ❑AT-191, "Lock-up Is Not Released" . ❑AT-192, "Engine Speed Does Not Return to Idle (Light Braking $D_4 \rightarrow D_3$)" .	
		Part 2	AT-58
		❑AT-183, "Vehicle Cannot Be Started from D_1" . ❑AT-185, "A/T Does Not Shift: $D_1 \rightarrow D_2$ or Does Not Kickdown: $D_4 \rightarrow D_2$" . ❑AT-186, "A/T Does Not Shift: $D_2 \rightarrow D_3$" . ❑AT-188, "A/T Does Not Shift: $D_3 \rightarrow D_4$" .	
		Part 3	AT-59
		❑AT-193, "A/T Does Not Shift: $D_4 \rightarrow D_3$, When OD OFF" . ❑AT-194, "A/T Does Not Shift: $D_3 \rightarrow 2_2$, When Selector Lever "D" → "2" Position" . ❑AT-195, "A/T Does Not Shift: $2_2 \rightarrow 1_1$, When Selector Lever "2" → "1" Position" . ❑AT-197, "Vehicle Does Not Decelerate by Engine Brake" . ❑ Perform self-diagnosis. Enter checks for detected items. AT-73 , AT-78 .	
		❑AT-83 . ❑AT-86 . ❑AT-91 . ❑AT-96 . ❑AT-101 . ❑AT-105 ❑AT-108 . ❑AT-111 . ❑AT-114 . ❑AT-119 . ❑AT-124 . ❑AT-129 . ❑AT-134 . ❑AT-139 . ❑AT-144 . ❑AT-149 . ❑AT-152 . ❑AT-158 . ❑AT-163 . ❑AT-164 .	
5.	❑ For self-diagnosis NG items, inspect each component. Repair or replace the damaged parts.		AT-73, AT-78
6.	❑ Perform "Road Test".		AT-52
7.	❑ Perform the Diagnostic Procedures for all remaining items marked NG. Repair or replace the damaged parts. Refer to the Symptom Chart when you perform the procedures. (The chart also shows some other possible symptoms and the component inspection orders.)		AT-61
8.	❑ Erase DTC from TCM and ECM memories.		AT-36, AT-78

A/T Electrical Parts Location

INFOID:0000000001703180

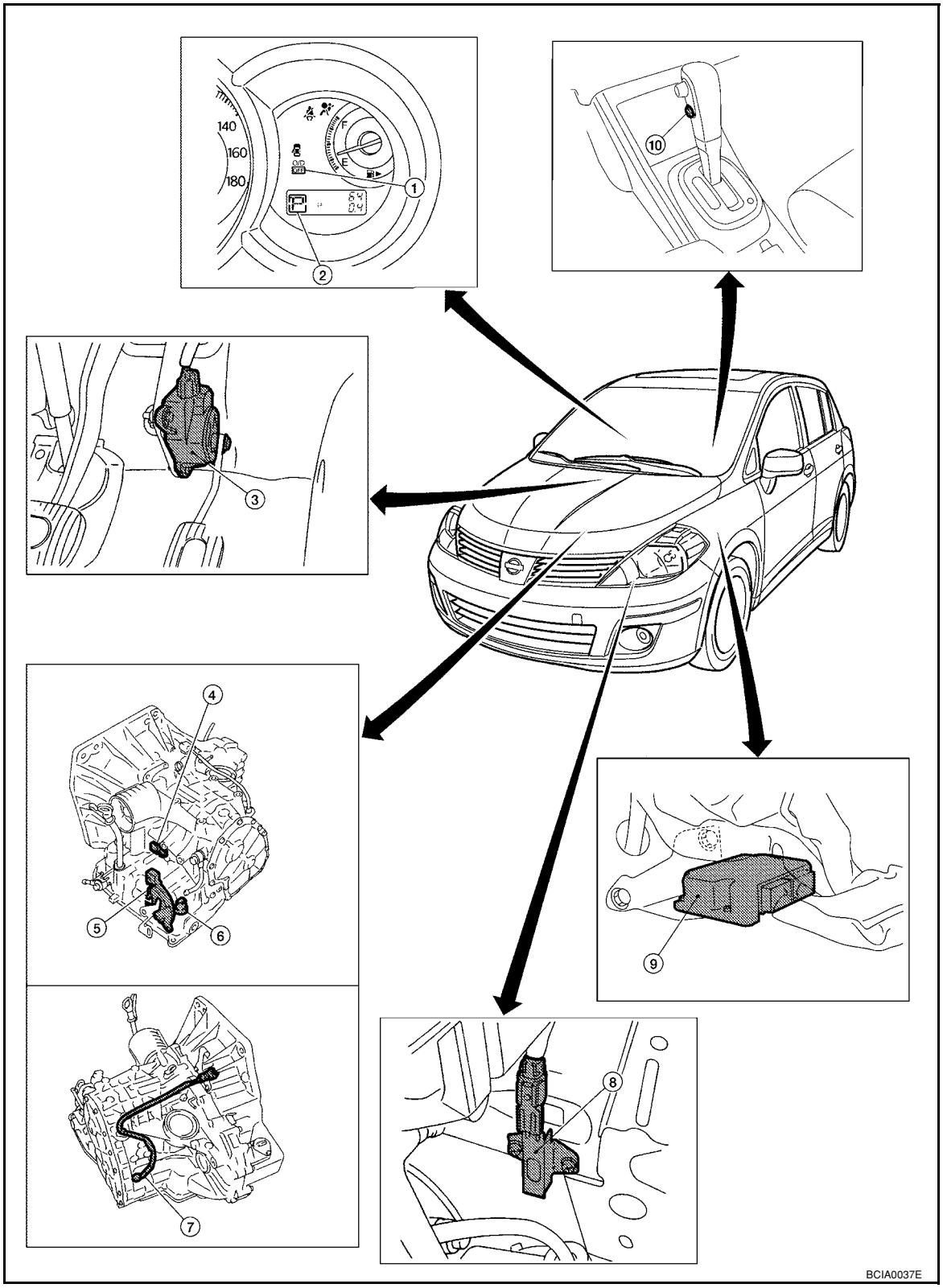

1. OD OFF indicator lamp
2. Shift position indicator
3. Accelerator pedal position (APP) sensor
4. Turbine revolution sensor (Power train revolution sensor)
5. PNP switch
6. Terminal body (Terminal cord assembly connector)

7. Revolution sensor
8. Dropping resistor
9. TCM
10. Overdrive control switch

Circuit Diagram

INFOID:0000000001703181

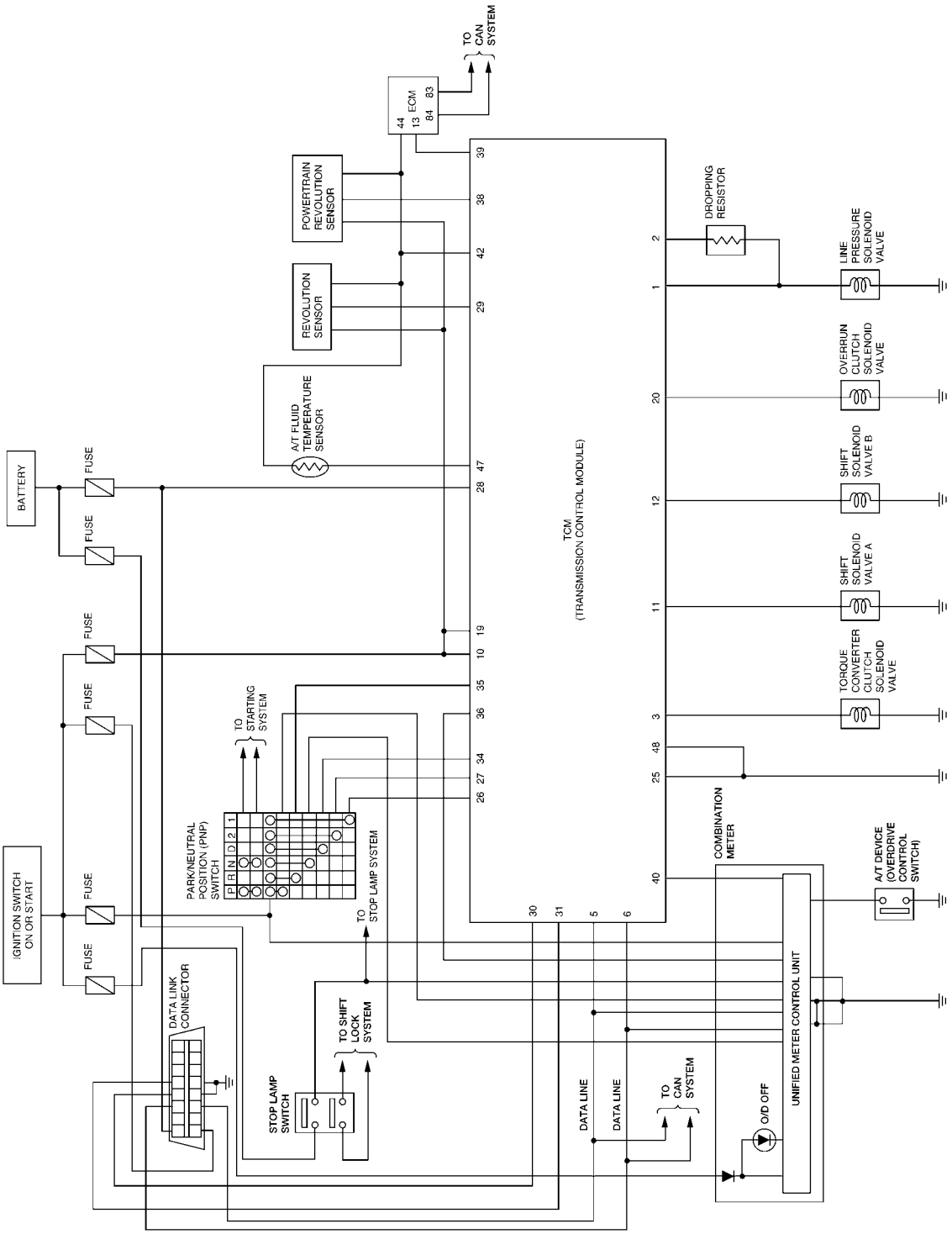

BCWA0647E

Inspections Before Trouble Diagnosis

INFOID:0000000001703182

A/T FLUID CHECK

Fluid Leakage and Fluid Level Check
Check fluid leakage and check the fluid level. Refer to MA-22, "Checking A/T Fluid".

Fluid Condition Check
Check the A/T fluid condition.

Fluid status	Conceivable Cause	Required Operation
Varnished (viscous varnish state)	Clutch, brake scorched	Replace the ATF and check the A/T main unit and the vehicle for malfunctions (wire harnesses, cooler pipes, etc.)
Milky white or cloudy	Water in the ATF	Replace the ATF and check for places where water is getting in.
Large amount of metal powder mixed in	Unusual wear of sliding parts within A/T	Replace the ATF and check for improper operation of the A/T.

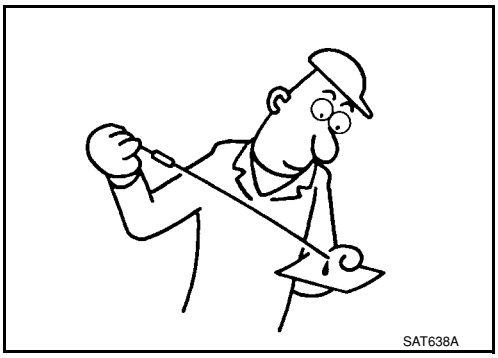
SAT638A

STALL TEST

Stall Test Procedure

1. Check ATF and engine oil levels. If necessary, add ATF and engine oil.
2. Drive vehicle for approximately 10 minutes or until ATF and engine oil reach operating temperature.

ATF operating temperature: 50 - 80°C (122 - 176°F)

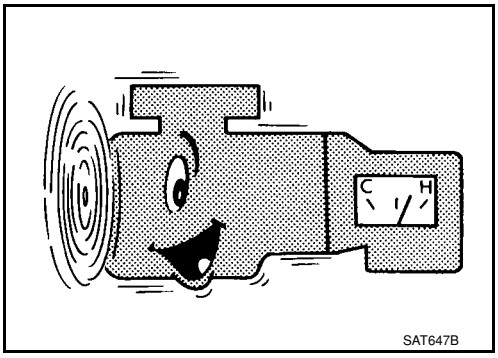

SAT647B

3. Set parking brake and block wheels.
4. Install a tachometer where it can be seen by driver during test.
   - **It is good practice to mark the point of specified engine rpm on indicator.**

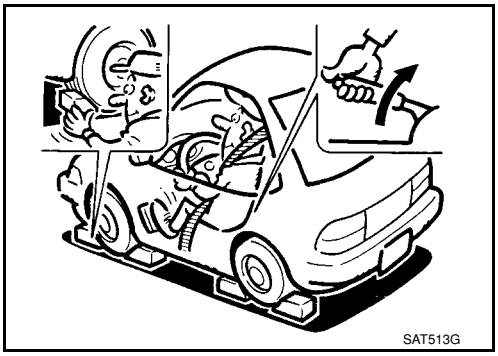
SAT513G

5. Start engine, apply foot brake, and place selector lever in “D” position.

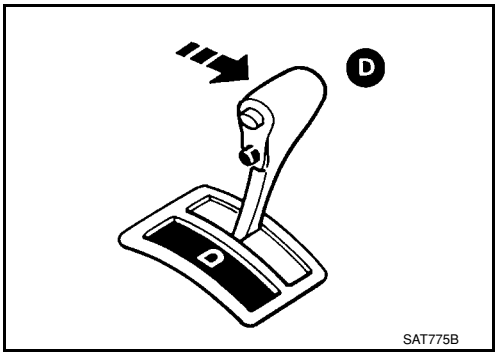

SAT775B

6. Accelerate to wide open throttle gradually while applying foot brake.
7. Quickly note the engine stall revolution and immediately release throttle.
   CAUTION:
   Do not hold down the accelerator pedal for more than 5 seconds during this test.

   Stall revolution: 2,310 - 2,770 rpm

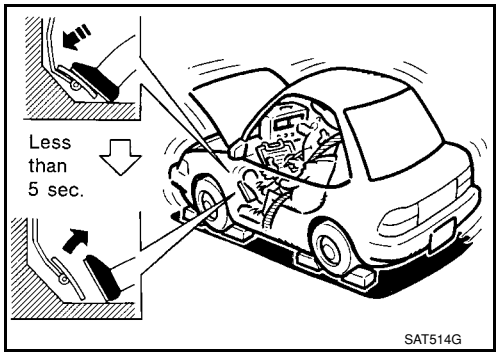

8. Move selector lever to “N” position.
9. Cool off ATF.
   CAUTION:
   Run the engine at idle for at least 1 minute.
10. Repeat steps 6 through 9 with selector lever in “2”, “1” and “R” positions.

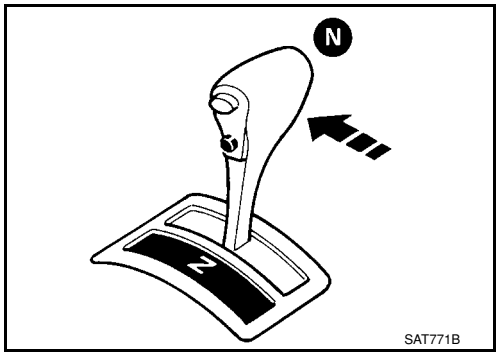

Judgement of Stall Test

The test result and possible damaged components relating to each result are shown in the illustrations on next page.

In order to pinpoint the possible damaged components, refer to AT-40, "How to Perform Trouble Diagnosis for Quick and Accurate Repair".

NOTE:

Stall revolution is too high in “D”, “2”, or “1” position:

- Slippage occurs in 1st gear but not in 2nd and 3rd gears. ..... Low one-way clutch slippage
- Slippage occurs in the following gears:
  1st through 3rd gears in “D” position and engine brake functions with OD OFF. (OD OFF indicator lamp is on.)
  1st and 2nd gears in “2” position and engine brake functions with accelerator pedal released (fully closed throttle)..... Forward clutch or forward one-way clutch slippage

Stall revolution is too high in “R” position:

- Engine brake does not function in “1” position. ..... Low & reverse brake slippage
- Engine brake functions in “1” position. ..... Reverse clutch slippage

Stall revolution within specifications:

- Vehicle does not achieve speed of more than 80 km/h (50 MPH). ..... One-way clutch seizure in torque converter housing

CAUTION:

Be careful because automatic fluid temperature increases abnormally:

- Slippage occurs in 3rd and 4th gears in “D” position. ..... High clutch slippage
- Slippage occurs in 2nd and 4th gears in “D” position. ..... Brake band slippage
- Engine brake does not function in 2nd and 3rd gears in “D” position, 2nd gear in “2” position, and 1st gear in “1” position with OD OFF. (OD OFF indicator lamp is on.) ..... Overrun clutch slippage

Stall revolution less than specifications:

- Poor acceleration during starts. ..... One-way clutch seizure in torque converter

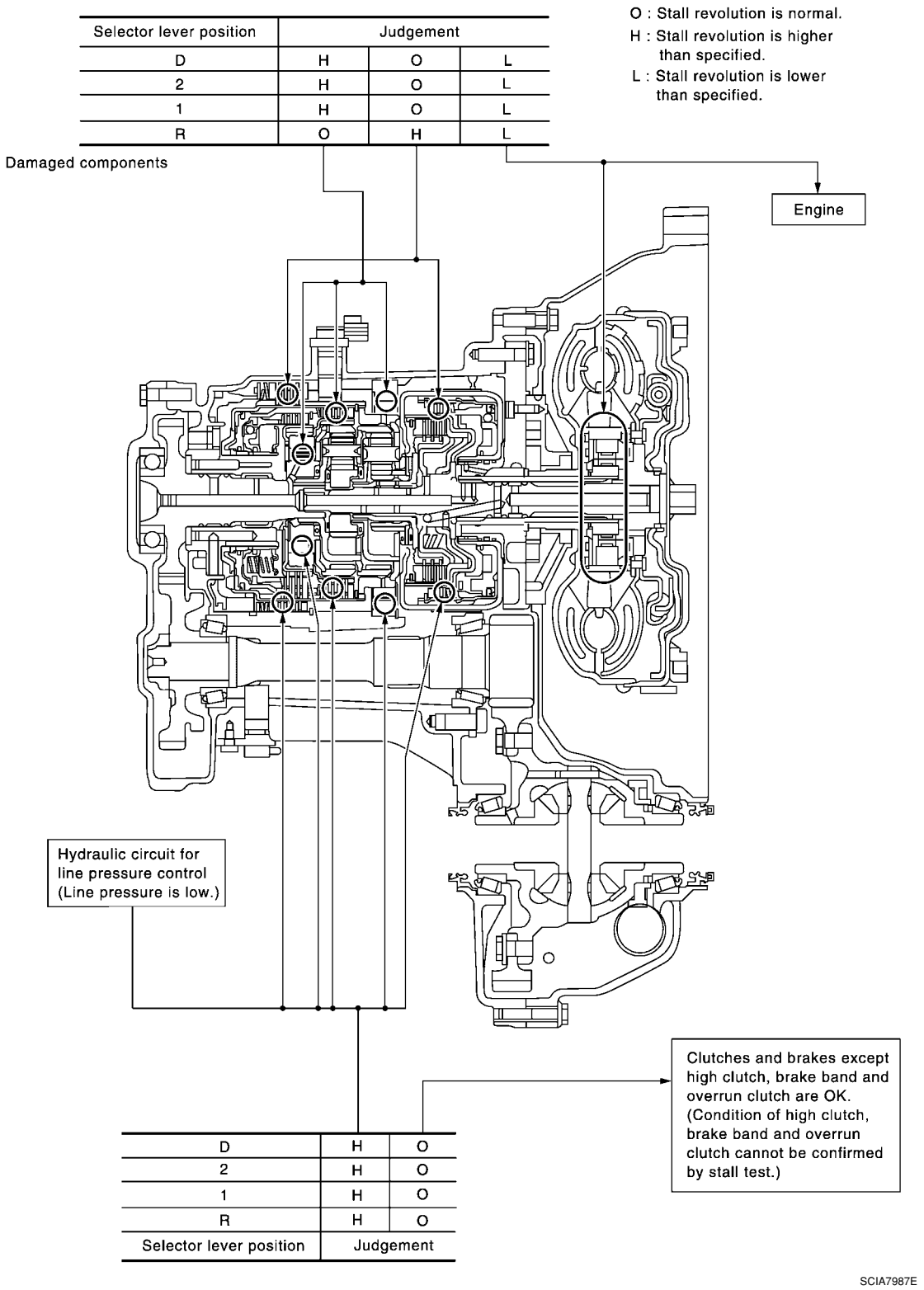

Selector lever position	Judgement		
D	H	O	L
2	H	O	L
1	H	O	L
R	O	H	L

D	H	O
2	H	O
1	H	O
R	H	O
Selector lever position	Judgement	

LINE PRESSURE TEST

Line Pressure Test Ports

Location of line pressure test ports are shown in the figure.

- **Always replace pressure plugs as they are self-sealing bolts.**

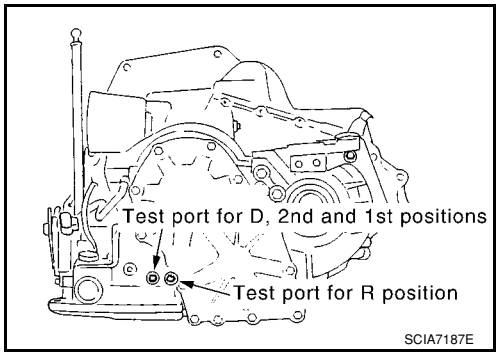

Line Pressure Test Procedure

1. Check ATF and engine oil levels. If necessary, add ATF or engine oil.
2. Drive vehicle for approx. 10 minutes or until engine oil and ATF reach operating temperature.

   ATF operating temperature: 50 - 80°C (122 -176°F)

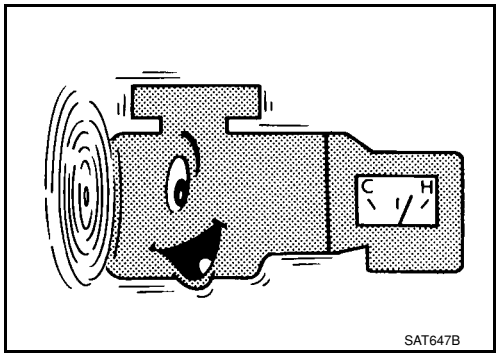

3. Install oil pressure gauge to corresponding line pressure test port.

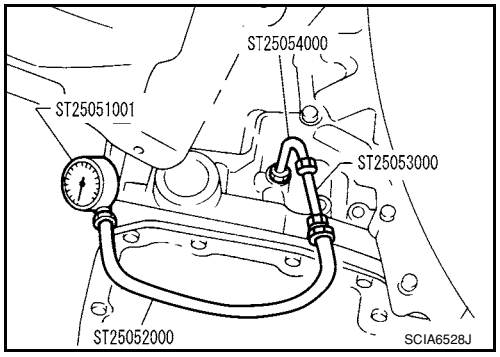

4. Set parking brake and block wheels.

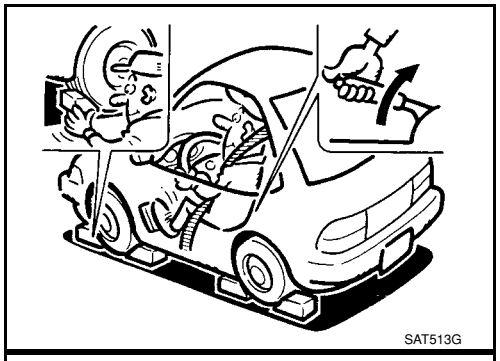

5. Start engine and measure line pressure at idle and stall speed.

   CAUTION:
   - **Keep the brake pedal pressed all the way down during measurement.**
   - **When measuring the line pressure at the stall speed, refer to "STALL TEST".**

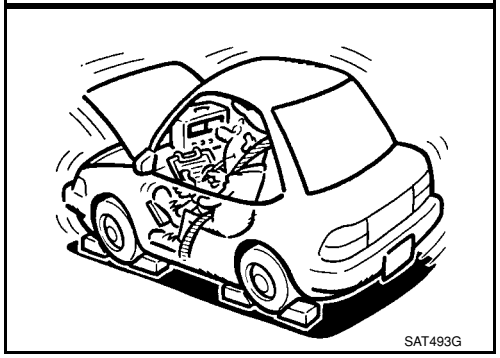

Line Pressure

Engine speed	Line pressure [kPa (kg/cm^2 , psi)]	
	D, 2nd and 1st positions	R position
Idle speed	500 (5.1, 73)	778 (7.9, 113)
Stall speed	1,173 (12.0, 170)	1,825 (18.6, 265)

Judgement of Line Pressure Test

Judgement		Suspected parts
At idle	Line pressure is low in all positions.	• Oil pump wear • Control piston damage • Pressure regulator valve or plug sticking • Spring for pressure regulator valve damaged • Fluid pressure leakage between oil strainer and pressure regulator valve • Clogged strainer
	Line pressure is low in particular position.	• Fluid pressure leakage between manual valve and particular clutch • For example, line pressure is: – Low in “R” and “1” positions, but – Normal in “D”, and “2” positions. Therefore, fluid leakage exists at or around low and reverse brake circuit. Refer to AT-19, "Shift Mechanism".
	Line pressure is high.	• Accelerator pedal position signal malfunction • A/T fluid temperature sensor damaged • Line pressure solenoid valve sticking • Short circuit of line pressure solenoid valve circuit • Pressure modifier valve sticking • Pressure regulator valve or plug sticking • Open in dropping resistor circuit
At stall speed	Line pressure is low.	• Accelerator pedal position signal malfunction • Line pressure solenoid valve sticking • Short circuit of line pressure solenoid valve circuit • Pressure regulator valve or plug sticking • Pressure modifier valve sticking • Pilot valve sticking

Road Test

INFOID:0000000001703183

DESCRIPTION

- The purpose of the test is to determine overall performance of A/T and analyze causes of malfunctions.
- The road test consists of the following three parts:

1. Check before engine is started. Refer to AT-53 .
2. Check at idle. Refer to AT-53 .
3. Cruise test
   - Inspection all the item from Part 1 to Part 3. Refer to AT-55 , AT-58 and AT-59 .

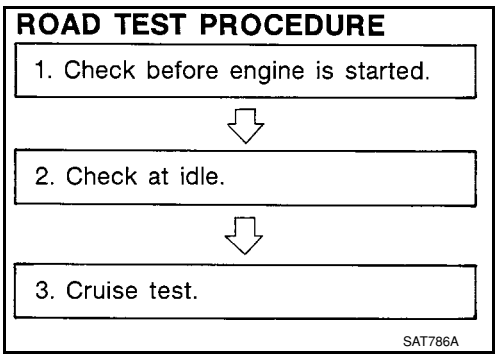

- Before road test, familiarize yourself with all test procedures and items to check.
- Perform tests on all items until specified symptom is found. Troubleshoot the items which are checked out to be no good after road test. Refer to AT-73, "CONSULT-III Function (A/T)" , AT-78, "Diagnosis Procedure without CONSULT-III" and AT-173 .

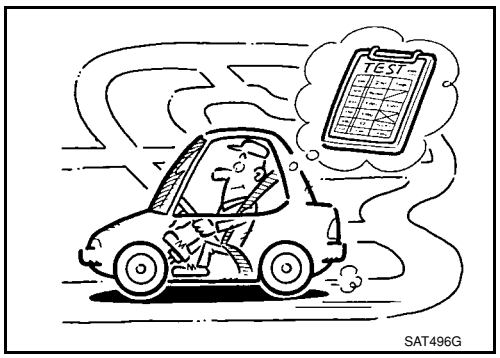

SAT496G

Check Before Engine Is Started

INFOID:0000000001703184

1.CHECK OD OFF INDICATOR LAMP

1. Park vehicle on flat surface.
2. Move selector lever to “P” position.
3. Turn ignition switch OFF. Wait at least 5 seconds.

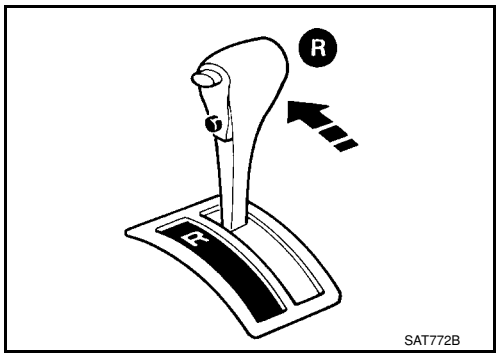

SAT772B

4. Turn ignition switch ON. (Do not start engine.)

Does OD OFF indicator lamp come on for about 2 seconds?

YES >> 1. Turn ignition switch OFF.
2. Perform self-diagnosis and note NG items. Refer to AT-73, "CONSULT-III Function (A/T)" , AT-78, "Diagnosis Procedure without CONSULT-III" .
3. Go to AT-53, "Check at Idle" .

NO >> Stop “Road Test”. Go to AT-176, "OD OFF Indicator Lamp Does Not Come On" .

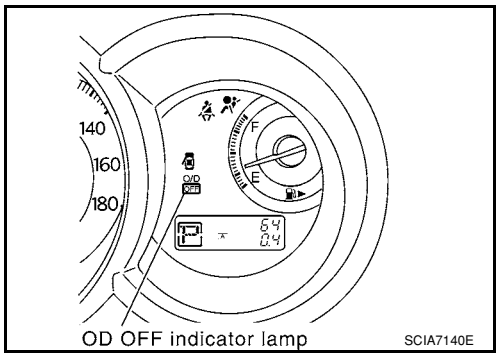

SCIA7140E

Check at Idle

INFOID:0000000001703185

1.CHECK ENGINE START

1. Park vehicle on flat surface.
2. Turn ignition switch ON. (Do not start engine.)
3. Move selector lever to “P” or “N” position.
4. Turn ignition switch to “START” position.

Is engine started?

YES >> GO TO 2.

NO >>
- Stop “Road Test”. Mark the box on the AT-40, "How to Perform Trouble Diagnosis for Quick and Accurate Repair" .
- Go to AT-178, "Engine Cannot Be Started in "P" and "N" Position" .

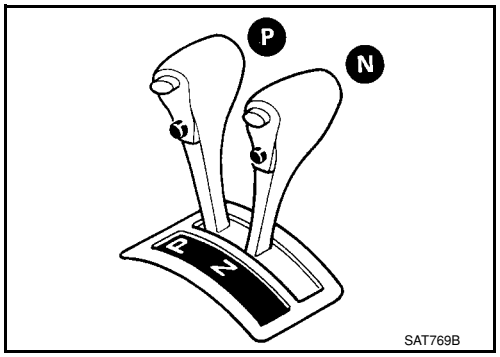

SAT769B

2.CHECK ENGINE START

1. Turn ignition switch ON. (Do not start engine.)

2. Move selector lever to “R”, “D”, “2” or “1” position.
3. Turn ignition switch to “START” position.

Is engine started?

YES >> • Stop “Road Test”. Mark the box on the AT-40, "How to Perform Trouble Diagnosis for Quick and Accurate Repair" .
• Go to AT-178, "Engine Cannot Be Started in "P" and "N" Position" .
• Continue “Road Test”.

NO >> GO TO 3.

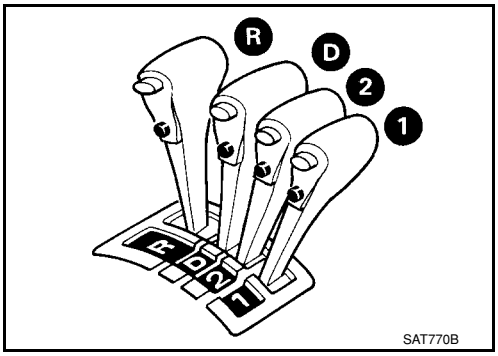

3. CHECK VEHICLE MOVE

1. Move selector lever to “P” position.
2. Turn ignition switch OFF.
3. Release parking brake.

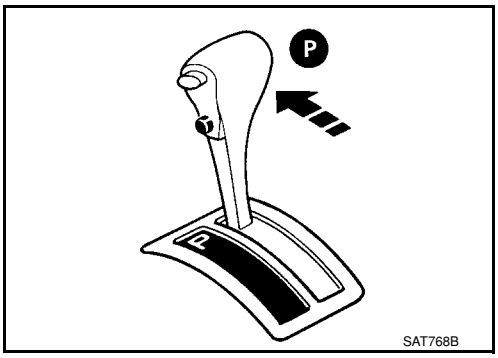

4. Push vehicle forward or backward.

Does vehicle move when it is pushed forward or backyard?

YES >> • Mark the box on the AT-40, "How to Perform Trouble Diagnosis for Quick and Accurate Repair" .
• Go to AT-179, "In "P" Position, Vehicle Moves Forward or Backward When Pushed" .
• Continue “Road Test”.

NO >> GO TO 4.

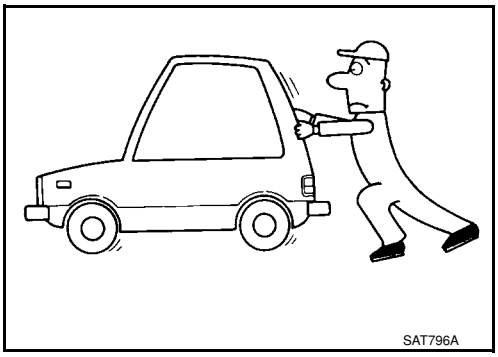

4. CHECK VEHICLE MOVE

1. Apply parking brake.
2. Start engine.
3. Move selector lever to “N” position.
4. Release parking brake.

Does vehicle move forward or backward?

YES >> • Mark the box on the AT-40, "How to Perform Trouble Diagnosis for Quick and Accurate Repair" .
• Go to AT-179, "In "N" Position, Vehicle Moves" .
• Continue “Road Test”.

NO >> GO TO 5.

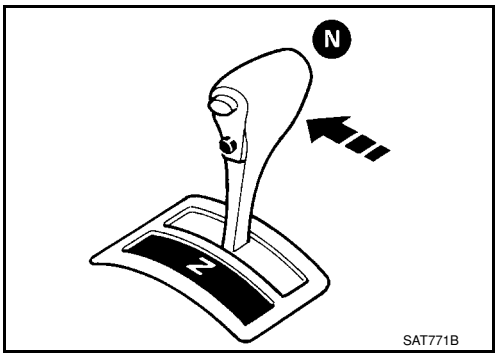

5. CHECK SHIFT SHOCK

1. Apply foot brake.

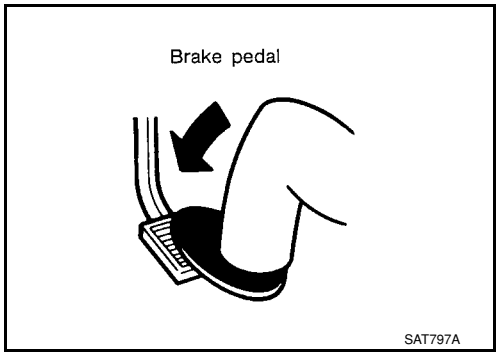

2. Move selector lever to “R” position.

Is there large shock when changing from “N” to “R” position?

YES >> • Mark the box on the AT-40, "How to Perform Trouble Diagnosis for Quick and Accurate Repair" .
• Go to AT-180, "Large Shock "N" → "R" Position" .
• Continue “Road Test”.

NO >> GO TO 6.

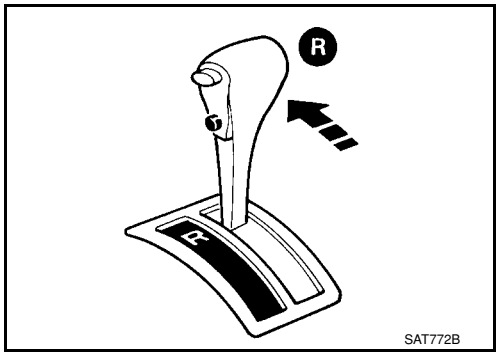

6. CHECK VEHICLE MOVE

Release foot brake for several seconds.

Does vehicle creep backward when foot brake is released?

YES >> GO TO 7.

NO >> • Mark the box on the AT-40, "How to Perform Trouble Diagnosis for Quick and Accurate Repair" .
• Go to AT-181, "Vehicle Does Not Creep Backward in "R" Position" .
• Continue “Road Test”.

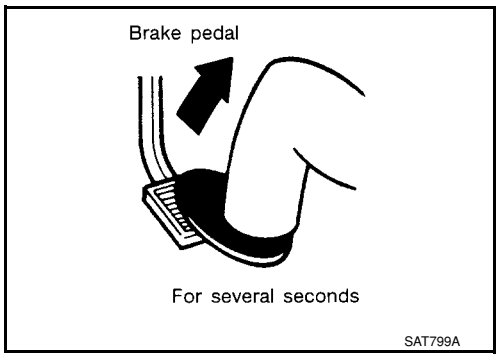

7. CHECK VEHICLE MOVE

Move selector lever to “D”, “2” and “1” positions and check if vehicle creeps forward.

Does vehicle creep forward in all three positions?

YES >> Go to AT-55, "Cruise Test - Part 1" .

NO >> • Mark the box on the AT-40, "How to Perform Trouble Diagnosis for Quick and Accurate Repair" .
• Go to AT-182, "Vehicle Does Not Creep Forward in "D", "2" or "1" Position" .
• Continue “Road Test”.

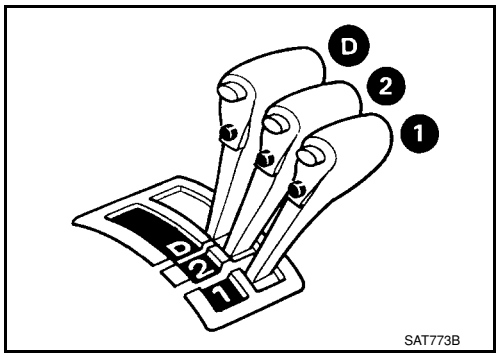

Cruise Test - Part 1

INFOID:0000000001703186

1. CHECK STARTING GEAR (D_1) POSITION

1. Drive vehicle for approximately 10 minutes to warm engine oil and ATF up to operating temperature.

ATF operating temperature: 50 - 80°C (122 - 176°F)

2. Park vehicle on flat surface.

3. Push overdrive control switch. (OD OFF indicator lamp is off.)
4. Move selector lever to “P” position.
5. Start engine.

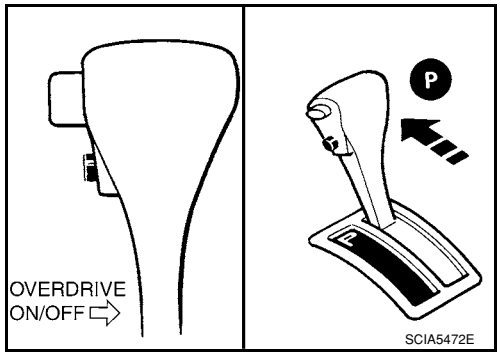

6. Move selector lever to “D” position.

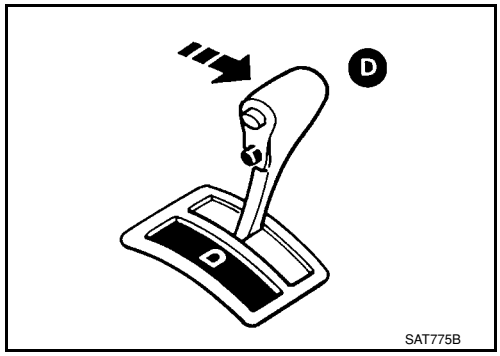

7. Accelerate vehicle by constantly depressing accelerator pedal half-way.

   Read gear position. Refer to AT-73, "CONSULT-III Function (A/T)" .

Does vehicle start from D_1 ?

YES >> GO TO 2.
NO >> • Mark the box on the AT-40, "How to Perform Trouble Diagnosis for Quick and Accurate Repair" .
• Go to AT-183, "Vehicle Cannot Be Started from D_1" .
• Continue “Road Test”.

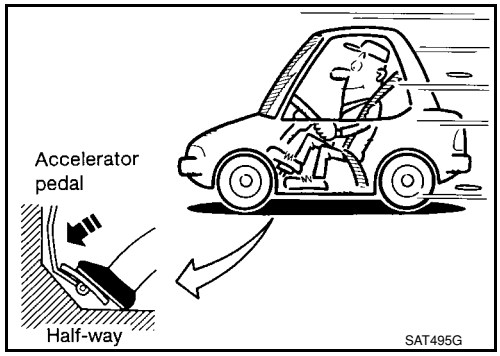

2. CHECK SHIFT-UP (D_1 TO D_2)

Check shift-up (D_1 to D_2).
Specified speed when shifting from D_1 to D_2. Refer to AT-61, "Vehicle Speed at Which Gear Shifting Occurs" .

Read gear position, throttle opening and vehicle speed. Refer to AT-73, "CONSULT-III Function (A/T)" .

Does A/T shift from D_1 to D_2 at the specified speed?

YES >> GO TO 3.
NO >> • Mark the box on the AT-40, "How to Perform Trouble Diagnosis for Quick and Accurate Repair" .
• Go to AT-185, "A/T Does Not Shift: $D_1 \rightarrow D_2$ or Does Not Kickdown: $D_4 \rightarrow D_2$" .
• Continue “Road Test”.

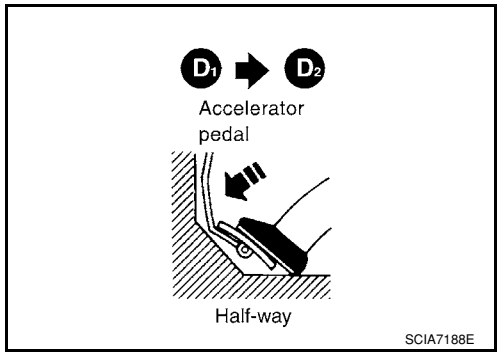

3. CHECK SHIFT-UP (D_2 TO D_3)

Check shift-up (D_2 to D_3).
Specified speed when shifting from D_2 to D_3. Refer to AT-61, "Vehicle Speed at Which Gear Shifting Occurs" .

Read gear position, throttle opening and vehicle speed. Refer to AT-73, "CONSULT-III Function (A/T)" .

Does A/T shift from D_2 to D_3 at the specified speed?

YES >> GO TO 4.
NO >> • Mark the box on the AT-40, "How to Perform Trouble Diagnosis for Quick and Accurate Repair" .
• Go to AT-186, "A/T Does Not Shift: $D_2 \rightarrow D_3$" .
• Continue "Road Test".

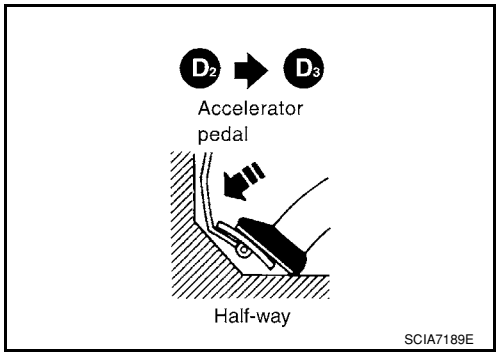

4. CHECK SHIFT-UP (D_3 TO D_4)

Check shift-up (D_3 to D_4).
Specified speed when shifting from D_3 to D_4. Refer to AT-61, "Vehicle Speed at Which Gear Shifting Occurs" .

Read gear position, throttle opening and vehicle speed. Refer to AT-73, "CONSULT-III Function (A/T)" .

Does A/T shift from D_3 to D_4 at the specified speed?

YES >> GO TO 5.
NO >> • Mark the box on the AT-40, "How to Perform Trouble Diagnosis for Quick and Accurate Repair" .
• Go to AT-188, "A/T Does Not Shift: $D_3 \rightarrow D_4$" .
• Continue "Road Test".

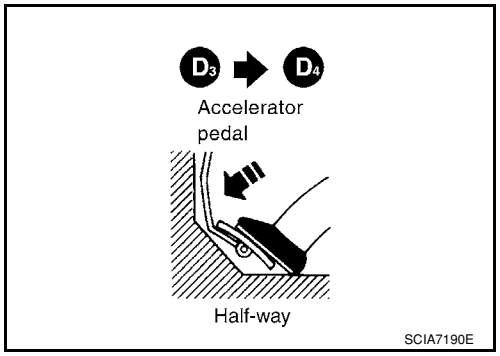

5. CHECK LOCK-UP (D_4 TO D_4 L/U)

Check lock-up (D_4 to D_4 L/U).
Specified speed when lock-up occurs. Refer to AT-61, "Vehicle Speed at Which Lock-up Occurs/Releases" .

Read vehicle speed, throttle opening when lock-up duty becomes 94%. Refer to AT-73, "CONSULT-III Function (A/T)" .

Does A/T perform lock-up at the specified speed?

YES >> GO TO 6.
NO >> • Mark the box on the AT-40, "How to Perform Trouble Diagnosis for Quick and Accurate Repair" .
• Go to AT-189, "A/T Does Not Perform Lock-up" .
• Continue "Road Test".

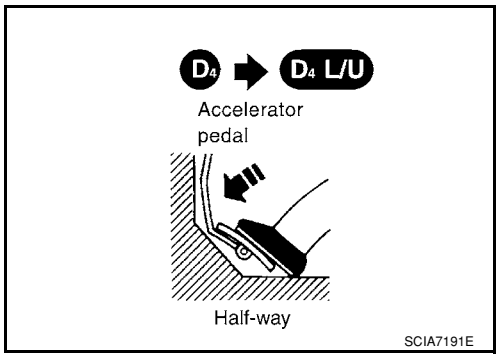

6. CHECK LOCK-UP HOLD

Check lock-up hold.

When lock-up duty becomes 94%. Refer to AT-73, "CONSULT-III Function (A/T)" .

Does A/T hold lock-up condition for more than 30 seconds?

YES >> GO TO 7.
NO >> • Mark the box on the AT-40, "How to Perform Trouble Diagnosis for Quick and Accurate Repair" .
• Go to AT-190, "A/T Does Not Hold Lock-up Condition" .
• Continue "Road Test".

7. CHECK SHIFT-DOWN (D_4 L/U TO D_4)

Release accelerator pedal.

When lock-up duty becomes 4%. Refer to AT-73, "CONSULT-III Function (A/T)" .

Is lock-up released when accelerator pedal is released?

YES >> GO TO 8.
NO >> • Mark the box on the AT-40, "How to Perform Trouble Diagnosis for Quick and Accurate Repair" .
• Go to AT-191, "Lock-up Is Not Released" .

- Continue “Road Test”.

8. CHECK SHIFT-DOWN (D_4 TO D_3)

Decelerate vehicle by applying foot brake lightly.

Read gear position and engine speed. Refer to AT-73, "CONSULT-III Function (A/T)" .

Does engine speed return to idle smoothly when A/T is shifted from D_4 to D_3 ?

YES >> 1. Stop vehicle.
2. Go to AT-58, "Cruise Test - Part 2" .

NO >>
- Mark the box on the AT-40, "How to Perform Trouble Diagnosis for Quick and Accurate Repair" .
- Go to AT-192, "Engine Speed Does Not Return to Idle (Light Braking $D_4 \rightarrow D_3$)" .
- Continue “Road Test”.

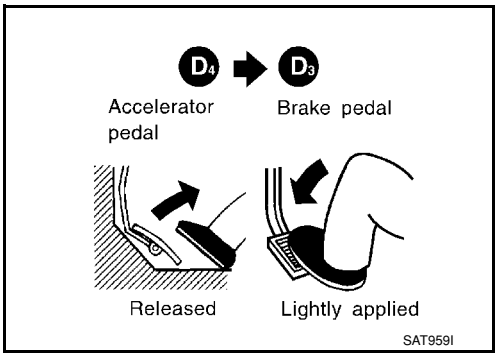

Cruise Test - Part 2

INFOID:0000000001703187

1. CHECK STARTING GEAR (D_1) POSITION

1. Push overdrive control switch. (OD OFF indicator lamp is off.)
2. Move selector lever to “D” position.
3. Accelerate vehicle by half throttle again.

Read gear position. Refer to AT-73, "CONSULT-III Function (A/T)" .

Does vehicle start from D_1 ?

YES >> GO TO 2.

NO >>
- Mark the box on the AT-40, "How to Perform Trouble Diagnosis for Quick and Accurate Repair" .
- Go to AT-183, "Vehicle Cannot Be Started from D_1" .
- Continue “Road Test”.

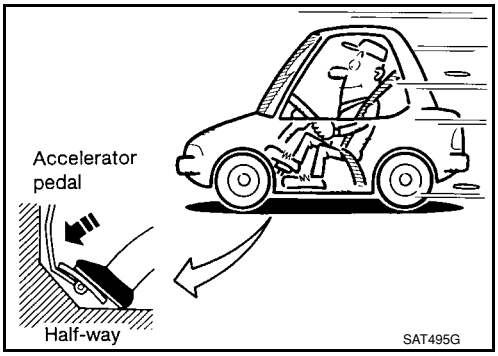

2. CHECK SHIFT-UP AND SHIFT-DOWN (D_3 TO D_4 TO D_2)

1. Accelerate vehicle to 80 km/h (50 MPH) as shown in the figure.
2. Release accelerator pedal and then quickly depress it fully.

Read gear position and throttle opening. Refer to AT-73, "CONSULT-III Function (A/T)" .

Does A/T shift from D_4 to D_2 as soon as accelerator pedal is depressed fully?

YES >> GO TO 3.

NO >>
- Mark the box on the AT-40, "How to Perform Trouble Diagnosis for Quick and Accurate Repair" .
- Go to AT-185, "A/T Does Not Shift: $D_1 \rightarrow D_2$ or Does Not Kickdown: $D_4 \rightarrow D_2$" .
- Continue “Road Test”.

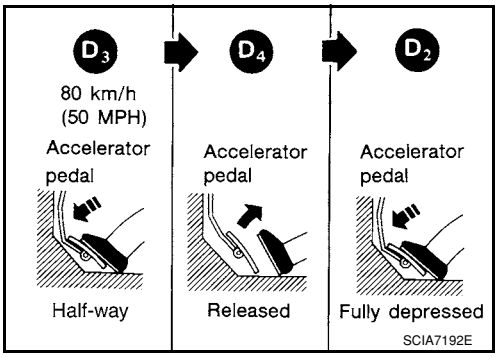

3. CHECK SHIFT-UP (D_2 TO D_3)

Check shift-up (D_2 to D_3)

Specified speed when shifting from D_2 to D_3 . Refer to AT-61, "Vehicle Speed at Which Gear Shifting Occurs" .

Read gear position, throttle opening and vehicle speed. Refer to AT-73, "CONSULT-III Function (A/T)" .

Does A/T shift from D2 to D3 at the specified speed?

YES >> GO TO 4.

NO >>
- Mark the box on the AT-40, "How to Perform Trouble Diagnosis for Quick and Accurate Repair" .
- Go to AT-186, "A/T Does Not Shift: D2→ D3" .
- Continue “Road Test”.

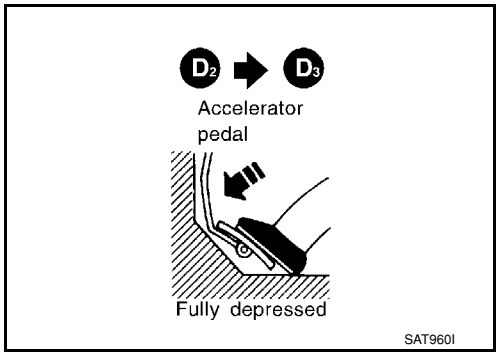

4. CHECK SHIFT-UP (D3 TO D4) AND ENGINE BRAKE

Release accelerator pedal after shifting from D2 to D3 .

Read gear position, throttle opening and vehicle speed. Refer to AT-73, "CONSULT-III Function (A/T)" .

Does A/T shift from D3 to D4 and does vehicle decelerate by engine brake?

YES >>
1. Stop vehicle.
2. Go to AT-59, "Cruise Test - Part 3" .

NO >>
- Mark the box on the AT-40, "How to Perform Trouble Diagnosis for Quick and Accurate Repair" .
- Go to AT-188, "A/T Does Not Shift: D3→ D4" .
- Continue “Road Test”.

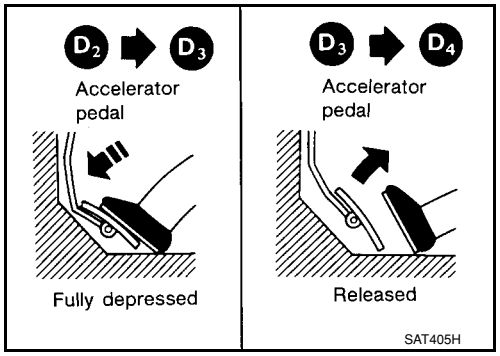

Cruise Test - Part 3

INFOID:0000000001703188

1. CHECK SHIFT-DOWN (D4 TO D3)

1. Push overdrive control switch. (OD OFF indicator lamp is off.)
2. Move selector lever to “D” position.
3. Accelerate vehicle using half throttle to D4 .

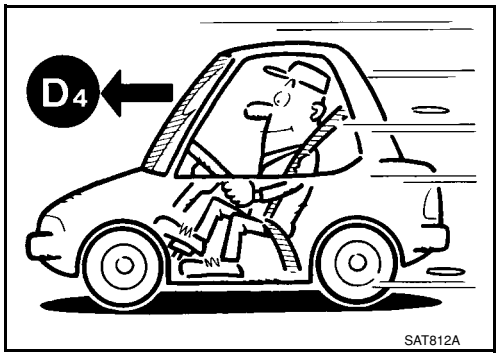

4. Release accelerator pedal.

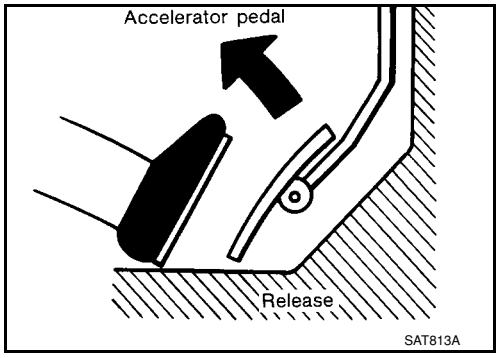

5. Push overdrive control switch. (OD OFF indicator lamp is on.)

Read gear position and vehicle speed. Refer to AT-73, "CONSULT-III Function (A/T)" .

Does A/T shift from D_4 to D_3 (OD OFF)?

YES >> GO TO 2.
NO >> • Mark the box on the AT-40, "How to Perform Trouble Diagnosis for Quick and Accurate Repair" .
• Go to AT-193, "A/T Does Not Shift: $D_4 \rightarrow D_3$, When OD OFF" .
• Continue “Road Test”.

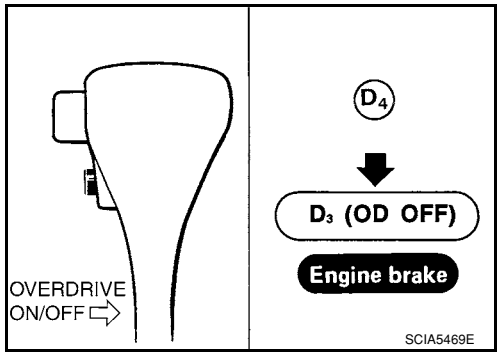

2. CHECK ENGINE BRAKE

Check engine brake.

Does vehicle decelerate by engine brake?

YES >> GO TO 3.
NO >> • Mark the box on the AT-40, "How to Perform Trouble Diagnosis for Quick and Accurate Repair" .
• Go to AT-197, "Vehicle Does Not Decelerate by Engine Brake" .
• Continue “Road Test”.

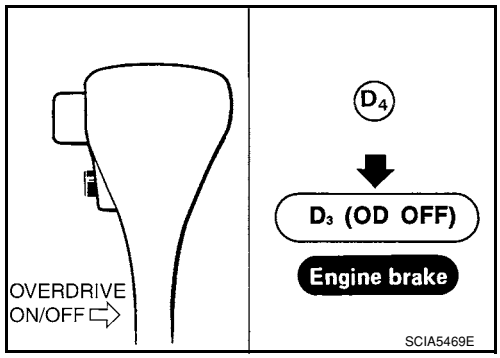

3. CHECK SHIFT-DOWN (D_3 TO 2_2)

Move selector lever from “D” to “2” position while driving in D_3 (OD OFF).

Read gear position. Refer to AT-73, "CONSULT-III Function (A/T)" .

Does A/T shift from D_3 (OD OFF) to 2_2 ?

YES >> GO TO 4.
NO >> • Mark the box on the AT-40, "How to Perform Trouble Diagnosis for Quick and Accurate Repair" .
• Go to AT-194, "A/T Does Not Shift: $D_3 \rightarrow 2_2$, When Selector Lever "D" → "2" Position" .
• Continue “Road Test”.

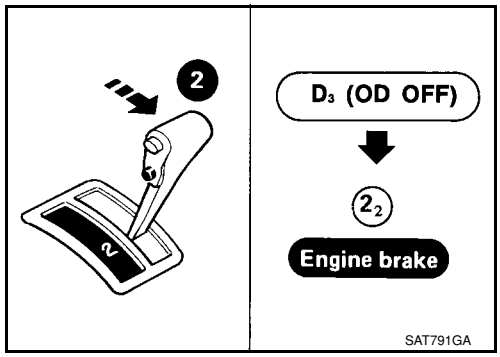

4. CHECK ENGINE BRAKE

Check engine brake.

Does vehicle decelerate by engine brake?

YES >> GO TO 5.
NO >> • Mark the box on the AT-40, "How to Perform Trouble Diagnosis for Quick and Accurate Repair" .
• Go to AT-197, "Vehicle Does Not Decelerate by Engine Brake" .
• Continue “Road Test”.

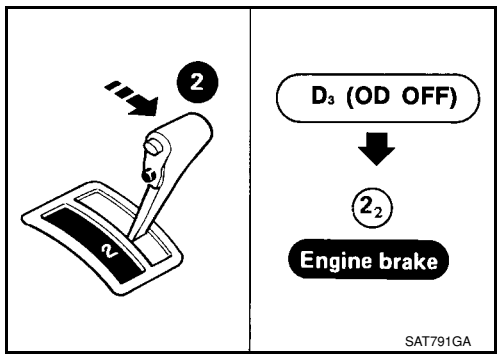

5. CHECK SHIFT-DOWN (2_2 TO 1_1)

Move selector lever from “2” to “1” position while driving in 2_2 .

Read gear position. Refer to AT-73, "CONSULT-III Function (A/T)" .

Does A/T shift from 2_2 to 1_1 position?

YES >> GO TO 6.

NO >>
- Mark the box on the AT-40, "How to Perform Trouble Diagnosis for Quick and Accurate Repair" .
- Go to AT-195, "A/T Does Not Shift: $2_2 \rightarrow 1_1$, When Selector Lever "2" → "1" Position" .
- Continue “Road Test”.

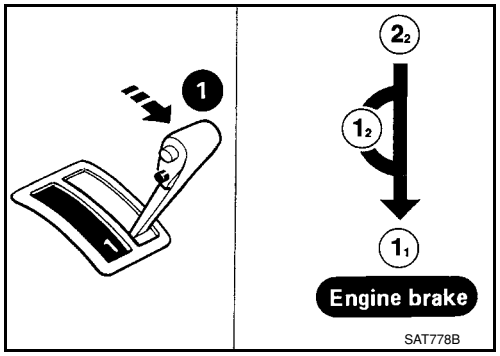

6. CHECK ENGINE BRAKE

Check engine brake.

Does vehicle decelerate by engine brake?

YES >>
1. Stop vehicle.
2. Perform self-diagnosis. Refer to AT-73, "CONSULT-III Function (A/T)" , AT-78, "Diagnosis Procedure without CONSULT-III" .

NO >>
- Mark the box on the AT-40, "How to Perform Trouble Diagnosis for Quick and Accurate Repair" .
- Go to AT-197, "Vehicle Does Not Decelerate by Engine Brake" .
- Stop “Road Test”.

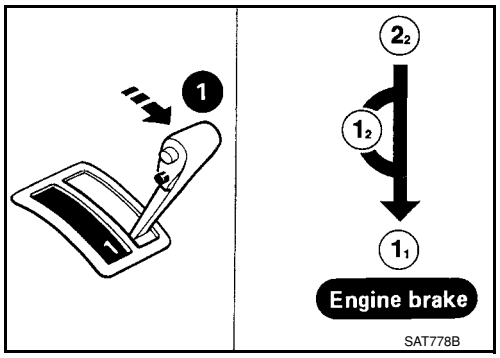

Vehicle Speed at Which Gear Shifting Occurs

INFOID:0000000001703189

Throttle position	Vehicle speed km/h (MPH)					
	$D_1 \rightarrow D_2$	$D_2 \rightarrow D_3$	$D_3 \rightarrow D_4$	$D_4 \rightarrow D_3$	$D_3 \rightarrow D_2$	$D_2 \rightarrow D_1$
Full throttle	51 - 59 (32 - 37)	97 - 105 (60 - 65)	154 - 162 (96 - 101)	150 - 158 (93 - 98)	87 - 95 (54 - 59)	40 - 48 (25 - 30)
Half throttle	34 - 42 (21 - 26)	62 - 70 (39 - 43)	124 - 132 (77 - 82)	69 - 77 (43 - 48)	36 - 44 (22 - 27)	19 - 27 (12 - 17)

- At half throttle, the accelerator opening is 4/8 of the full opening.

Vehicle Speed at Which Lock-up Occurs/Releases

INFOID:0000000001703190

Throttle position	Selector lever position	Vehicle speed km/h (MPH)	
		Lock-up ON	Lock-up OFF
2.0/8	“D” position	86 - 94 (53 - 58)	59 - 67 (37 - 42)
	“D” position (OD OFF)	86 - 94 (53 - 58)	83 - 91 (52 - 57)

Symptom Chart

INFOID:0000000001703191

Numbers are arranged in order of inspection.

Perform inspections starting with number one and work up.

Items	Symptom	Condition	Diagnostic item	Reference page
No Lock-up Engagement/TCC Inoperative	Torque converter is not locked up.	ON vehicle	1. Accelerator pedal position sensor	EC-493
			2. Vehicle speed sensor·A/T (Revolution sensor) and vehicle speed sensor·MTR	AT-96, AT-149
			3. Engine speed signal	AT-101
			4. A/T fluid temperature sensor	AT-91
			5. Line pressure test	AT-48
			6. Torque converter clutch solenoid valve	AT-119
			7. Control valve assembly	AT-216
		OFF vehicle	8. Torque converter	AT-240
	Torque converter clutch piston slip.	ON vehicle	1. A/T fluid level	MA-22
			2. Accelerator pedal position sensor	EC-493
			3. Line pressure test	AT-48
			4. Torque converter clutch solenoid valve	AT-119
			5. Line pressure solenoid valve	AT-129
			6. Control valve assembly	AT-216
		OFF vehicle	7. Torque converter	AT-240
	Lock-up point is extremely high or low.	ON vehicle	1. Accelerator pedal position sensor	EC-493
			2. Vehicle speed sensor·A/T (Revolution sensor) and vehicle speed sensor·MTR	AT-96, AT-149
			3. Torque converter clutch solenoid valve	AT-119
			4. Control valve assembly	AT-216
Shift Shock	Sharp shock in shifting from “N” to “D” position.	ON vehicle	1. Engine idling speed	EC-73
			2. Accelerator pedal position sensor	EC-493
			3. Line pressure test	AT-48
			4. A/T fluid temperature sensor	AT-91
			5. Engine speed signal	AT-101
			6. Line pressure solenoid valve	AT-129
			7. Control valve assembly	AT-216
			8. Accumulator N-D	AT-216
		OFF vehicle	9. Forward clutch	AT-288
	Too sharp a shock in changing from D_1 to D_2 .	ON vehicle	1. Accelerator pedal position sensor	EC-493
			2. Line pressure test	AT-48
			3. Accumulator servo release	AT-216
			4. Control valve assembly	AT-216
			5. A/T fluid temperature sensor	AT-91
		OFF vehicle	6. Brake band	AT-307

Items	Symptom	Condition	Diagnostic item	Reference page
Shift Shock	Too sharp a shock in changing from D_2 to D_3.	ON vehicle	1. Accelerator pedal position sensor	EC-493
			2. Line pressure test	AT-48
			3. Control valve assembly	AT-216
		OFF vehicle	4. High clutch	AT-284
			5. Brake band	AT-307
	Too sharp a shock in changing from D_3 to D_4.	ON vehicle	1. Accelerator pedal position sensor	EC-493
			2. Line pressure test	AT-48
			3. Control valve assembly	AT-216
		OFF vehicle	4. Brake band	AT-307
			5. Overrun clutch	AT-288
			6. Forward one-way clutch	AT-299
	Gear change shock during deceleration by releasing accelerator pedal.	ON vehicle	1. Accelerator pedal position sensor	EC-493
			2. Line pressure test	AT-48
			3. Overrun clutch solenoid valve	AT-144
			4. Control valve assembly	AT-216
	Large shock in changing from 1_2 to 1_1 in "1" position.	ON vehicle	1. Control valve assembly	AT-216
		OFF vehicle	2. Low & reverse brake	AT-295
Improper Shift Timing	Too high a gear change point from D_1 to D_2, from D_2 to D_3, from D_3 to D_4.	ON vehicle	1. Accelerator pedal position sensor	EC-493
			2. Vehicle speed sensor·A/T (Revolution sensor) and vehicle speed sensor·MTR	AT-96, AT-149
			3. Shift solenoid valve A	AT-134
			4. Shift solenoid valve B	AT-139
	Gear change directly from D_1 to D_3 occurs.	ON vehicle	1. A/T fluid level	MA-22
			2. Accumulator servo release	AT-216
		OFF vehicle	3. Brake band	AT-307
	Too high a change point from D_4 to D_3, from D_3 to D_2, from D_2 to D_1.	ON vehicle	1. Accelerator pedal position sensor	EC-493
			2. Vehicle speed sensor·A/T (Revolution sensor) and vehicle speed sensor·MTR	AT-96, AT-149
	Kickdown does not operate when depressing accelerator pedal in D_4 within kickdown vehicle speed.	ON vehicle	1. Accelerator pedal position sensor	EC-493
			2. Vehicle speed sensor·A/T (Revolution sensor) and vehicle speed sensor·MTR	AT-96, AT-149
			3. Shift solenoid valve A	AT-134
			4. Shift solenoid valve B	AT-139
	Kickdown operates or engine overruns when depressing accelerator pedal in D_4 beyond kickdown vehicle speed limit.	ON vehicle	1. Vehicle speed sensor·A/T (Revolution sensor) and vehicle speed sensor·MTR	AT-96, AT-149
			2. Accelerator pedal position sensor	EC-493
			3. Shift solenoid valve A	AT-134
			4. Shift solenoid valve B	AT-139
	Gear change from 2_2 to 2_3 in "2" position.	ON vehicle	1. PNP switch adjustment	AT-219
			2. Control cable adjustment	AT-207
	Gear change from 1_1 to 1_2 in "1" position.	ON vehicle	1. PNP switch adjustment	AT-219
			2. Control cable adjustment	AT-207

Items	Symptom	Condition	Diagnostic item	Reference page
No Down Shift	Failure to change gear from D_4 to D_3.	ON vehicle	1. A/T fluid level	MA-22
			2. Accelerator pedal position sensor	EC-493
			3. Overrun clutch solenoid valve	AT-144
			4. Shift solenoid valve A	AT-134
			5. Line pressure solenoid valve	AT-129
			6. Control valve assembly	AT-216
		OFF vehicle	7. Brake band	AT-307
			8. Overrun clutch	AT-288
	Failure to change gear from D_3 to D_2 or from D_4 to D_2.	ON vehicle	1. A/T fluid level	MA-22
			2. Accelerator pedal position sensor	EC-493
			3. Shift solenoid valve A	AT-134
			4. Shift solenoid valve B	AT-139
			5. Control valve assembly	AT-216
		OFF vehicle	6. High clutch	AT-284
			7. Brake band	AT-307
	Failure to change gear from D_2 to D_1 or from D_3 to D_1.	ON vehicle	1. A/T fluid level	MA-22
			2. Accelerator pedal position sensor	EC-493
			3. Shift solenoid valve A	AT-134
			4. Shift solenoid valve B	AT-139
			5. Control valve assembly	AT-216
		OFF vehicle	6. Low one-way clutch	AT-240
			7. High clutch	AT-284
			8. Brake band	AT-307
	Failure to change from D_3 to 2_2 when shifting selector lever into “2” position. AT-194	ON vehicle	1. Accelerator pedal position sensor	EC-493
			2. Shift solenoid valve B	AT-139
			3. Control valve assembly	AT-216
			4. Control cable adjustment	AT-207
		OFF vehicle	5. Brake band	AT-307
	Does not change from 1_2 to 1_1 in 1st position.	ON vehicle	1. PNP switch adjustment	AT-219
			2. Vehicle speed sensor·A/T (Revolution sensor) and vehicle speed sensor·MTR	AT-96, AT-149
			3. Shift solenoid valve A	AT-134
			4. Control valve assembly	AT-216
			5. Overrun clutch solenoid valve	AT-144
		OFF vehicle	6. Overrun clutch	AT-288
			7. Low & reverse brake	AT-295

Items	Symptom	Condition	Diagnostic item	Reference page
No Up Shift	Failure to change gear from D_1 to D_2.	ON vehicle	1. Control cable adjustment	AT-207
			2. Shift solenoid valve A	AT-134
			3. Control valve assembly	AT-216
			4. Vehicle speed sensor·A/T (Revolution sensor) and vehicle speed sensor·MTR	AT-96, AT-149
			5. Accelerator pedal position sensor	EC-493
		OFF vehicle	6. Brake band	AT-307
	Failure to change gear from D_2 to D_3.	ON vehicle	1. Control cable adjustment	AT-207
			2. Shift solenoid valve B	AT-139
			3. Control valve assembly	AT-216
			4. Vehicle speed sensor·A/T (Revolution sensor) and vehicle speed sensor·MTR	AT-96, AT-149
			5. Accelerator pedal position sensor	EC-493
		OFF vehicle	6. High clutch	AT-284
			7. Brake band	AT-307
	Failure to change gear from D_3 to D_4.	ON vehicle	1. PNP switch adjustment	AT-219
			2. Overdrive control switch	AT-167
			3. Control cable adjustment	AT-207
			4. Shift solenoid valve A	AT-134
			5. Vehicle speed sensor·A/T (Revolution sensor) and vehicle speed sensor·MTR	AT-96, AT-149
			6. A/T fluid temperature sensor	AT-91
		OFF vehicle	7. Brake band	AT-307
	A/T does not shift to D_4 when driving with OD ON. (OD OFF indicator lamp is off.)	ON vehicle	1. Accelerator pedal position sensor	EC-493
			2. PNP switch adjustment	AT-219
			3. Overdrive control switch	AT-167
			4. Vehicle speed sensor·A/T (Revolution sensor) and vehicle speed sensor·MTR	AT-96, AT-149
			5. Shift solenoid valve A	AT-134
			6. Overrun clutch solenoid valve	AT-144
			7. Control valve assembly	AT-216
			8. A/T fluid temperature sensor	AT-91
			9. Line pressure solenoid valve	AT-129
		OFF vehicle	10. Brake band	AT-307
			11. Overrun clutch	AT-288

Items	Symptom	Condition	Diagnostic item	Reference page
Slips/Will Not Engage	Vehicle will not run in “R” position (but runs in “D”, “2” and “1” positions). Clutch slips. Very poor acceleration.	ON vehicle	1. Control cable adjustment	AT-207
			2. Stall test	AT-48
			3. Line pressure test	AT-48
			4. Line pressure solenoid valve	AT-129
			5. Control valve assembly	AT-216
		OFF vehicle	6. Reverse clutch	AT-279
			7. High clutch	AT-284
			8. Forward clutch	AT-288
			9. Overrun clutch	AT-288
			10. Low & reverse brake	AT-295
	Vehicle will not run in “D” and “2” positions (but runs in “1” and “R” positions).	ON vehicle	1. Control cable adjustment	AT-207
		OFF vehicle	2. Low one-way clutch	AT-240
	Vehicle will not run in “D”, “1”, “2” positions (but runs in R position). Clutch slips. Very poor acceleration.	ON vehicle	1. A/T fluid level	MA-22
			2. Stall test	AT-48
			3. Line pressure test	AT-48
			4. Line pressure solenoid valve	AT-129
			5. Control valve assembly	AT-216
			6. Accumulator N-D	AT-216
		OFF vehicle	7. Reverse clutch	AT-279
			8. High clutch	AT-284
			9. Forward clutch	AT-288
			10. Forward one-way clutch	AT-299
			11. Low one-way clutch	AT-240
	Clutches or brakes slip somewhat in starting.	ON vehicle	1. A/T fluid level	MA-22
			2. Control cable adjustment	AT-207
			3. Accelerator pedal position sensor	EC-493
			4. Line pressure test	AT-48
			5. Line pressure solenoid valve	AT-129
			6. Control valve assembly	AT-216
			7. Accumulator N-D	AT-216
		OFF vehicle	8. Forward clutch	AT-288
			9. Reverse clutch	AT-279
			10. Low & reverse brake	AT-295
			11. Oil pump	AT-260
			12. Torque converter	AT-240

Items	Symptom	Condition	Diagnostic item	Reference page
Slips/Will Not Engage	No creep at all. AT-181, AT-182	ON vehicle	1. A/T fluid level	MA-22
			2. Line pressure test	AT-48
			3. Control valve assembly	AT-216
		OFF vehicle	4. Forward clutch	AT-288
			5. Oil pump	AT-260
			6. Torque converter	AT-240
	Almost no shock or clutches slipping in change from D_1 to D_2 .	ON vehicle	1. A/T fluid level	MA-22
			2. Accelerator pedal position sensor	EC-493
			3. Line pressure test	AT-48
			4. Accumulator servo release	AT-216
			5. Control valve assembly	AT-216
		OFF vehicle	6. Brake band	AT-307
	Almost no shock or slipping in changing from D_2 to D_3 .	ON vehicle	1. A/T fluid level	MA-22
			2. Accelerator pedal position sensor	EC-493
			3. Line pressure test	AT-48
			4. Control valve assembly	AT-216
		OFF vehicle	5. High clutch	AT-284
			6. Forward clutch	AT-288
	Almost no shock or slipping in changing from D_3 to D_4 .	ON vehicle	1. A/T fluid level	MA-22
			2. Accelerator pedal position sensor	EC-493
			3. Line pressure test	AT-48
			4. Control valve assembly	AT-216
		OFF vehicle	5. Brake band	AT-307
	Races extremely fast or slips in changing from D_4 to D_3 when depressing accelerator pedal.	ON vehicle	1. A/T fluid level	MA-22
			2. Accelerator pedal position sensor	EC-493
			3. Line pressure test	AT-48
			4. Line pressure solenoid valve	AT-129
			5. Shift solenoid valve A	AT-134
			6. Control valve assembly	AT-216
		OFF vehicle	7. Brake band	AT-307
			8. Forward clutch	AT-288
	Races extremely fast or slips in changing from D_4 to D_2 when depressing accelerator pedal.	ON vehicle	1. A/T fluid level	MA-22
			2. Accelerator pedal position sensor	EC-493
			3. Line pressure test	AT-48
			4. Line pressure solenoid valve	AT-129
			5. Shift solenoid valve A	AT-134
			6. Shift solenoid valve B	AT-139
			7. Control valve assembly	AT-216
		OFF vehicle	8. Brake band	AT-307
			9. Forward clutch	AT-288

Items	Symptom	Condition	Diagnostic item	Reference page
Slips/Will Not Engage	Races extremely fast or slips in changing from D_3 to D_2 when depressing accelerator pedal.	ON vehicle	1. A/T fluid level	MA-22
			2. Accelerator pedal position sensor	EC-493
			3. Line pressure test	AT-48
			4. Line pressure solenoid valve	AT-129
			5. Shift solenoid valve B	AT-139
			6. Control valve assembly	AT-216
		OFF vehicle	7. Brake band	AT-307
			8. High clutch	AT-284
	Races extremely fast or slips in changing from D_4 or D_3 to D_1 when depressing accelerator pedal.	ON vehicle	1. A/T fluid level	MA-22
			2. Accelerator pedal position sensor	EC-493
			3. Line pressure test	AT-48
			4. Line pressure solenoid valve	AT-129
			5. Shift solenoid valve A	AT-134
			6. Shift solenoid valve B	AT-139
			7. Control valve assembly	AT-216
		OFF vehicle	8. Forward clutch	AT-288
			9. Forward one-way clutch	AT-299
			10. Low one-way clutch	AT-240
	Vehicle will not run in any position.	ON vehicle	1. A/T fluid level	MA-22
			2. Control cable adjustment	AT-207
			3. Line pressure test	AT-48
			4. Line pressure solenoid valve	AT-129
		OFF vehicle	5. Oil pump	AT-260
			6. High clutch	AT-284
			7. Brake band	AT-307
			8. Low & reverse brake	AT-295
			9. Torque converter	AT-240
			10. Parking components	AT-230
Others	Engine cannot be started in “P” and “N” positions. AT-178	ON vehicle	1. Ignition switch and starter	PG-3, SC-8
			2. Control cable adjustment	AT-207
			3. PNP switch adjustment	AT-219
	Engine starts in positions other than “P” and “N”.	ON vehicle	1. Control cable adjustment	AT-207
			2. PNP switch adjustment	AT-219
	Transaxle noise in“ P” and “N” positions.	ON vehicle	1. A/T fluid level	MA-22
			2. Line pressure test	AT-48
			3. Accelerator pedal position sensor	EC-493
			4. Vehicle speed sensor·A/T (Revolution sensor) and vehicle speed sensor·MTR	AT-96, AT-149
		OFF vehicle	5. Oil pump	AT-260
			6. Torque converter	AT-240

Items	Symptom	Condition	Diagnostic item	Reference page
Others	Vehicle moves when changing into “P” position or parking gear does not disengage when shifted out of “P” position.	ON vehicle	1. Control cable adjustment	AT-207
		OFF vehicle	2. Parking components	AT-230
	Vehicle runs in “N” position. AT-179	ON vehicle	1. Control cable adjustment	AT-207
		OFF vehicle	2. Forward clutch	AT-288
			3. Reverse clutch	AT-279
			4. Overrun clutch	AT-288
	Vehicle braked when shifting into “R” position.	ON vehicle	1. A/T fluid level	MA-22
			2. Control cable adjustment	AT-207
			3. Line pressure test	AT-48
			4. Line pressure solenoid valve	AT-129
			5. Control valve assembly	AT-216
		OFF vehicle	6. High clutch	AT-284
			7. Brake band	AT-307
			8. Forward clutch	AT-288
			9. Overrun clutch	AT-288
	Excessive creep.	ON vehicle	1. Engine idling speed	EC-73
	Engine stops when shifting lever into “R”, “D”, “2” and “1” positions.	ON vehicle	1. Engine idling speed	EC-73
			2. A/T fluid level	MA-22
			3. Torque converter clutch solenoid valve	AT-119
			4. Control valve assembly	AT-216
		OFF vehicle	5. Torque converter	AT-240
	Vehicle braked by gear change from D_1 to D_2 .	ON vehicle	1. A/T fluid level	MA-22
		OFF vehicle	2. Reverse clutch	AT-279
			3. Low & reverse brake	AT-295
			4. High clutch	AT-284
			5. Low one-way clutch	AT-240
	Vehicle braked by gear change from D_2 to D_3 .	ON vehicle	1. A/T fluid level	MA-22
		OFF vehicle	2. Brake band	AT-307
	Vehicle braked by gear change from D_3 to D_4 .	ON vehicle	1. A/T fluid level	MA-22
		OFF vehicle	2. Overrun clutch	AT-288
			3. Forward one-way clutch	AT-299
			4. Reverse clutch	AT-279

Items	Symptom	Condition	Diagnostic item	Reference page
Others	Maximum speed not attained. Poor acceleration.	ON vehicle	1. A/T fluid level	MA-22
			2. PNP switch adjustment	AT-219
			3. Overdrive control switch	AT-167
			4. Accelerator pedal position sensor	EC-493
			5. Vehicle speed sensor·A/T (Revolution sensor) and vehicle speed sensor·MTR	AT-96, AT-149
			6. Shift solenoid valve A	AT-134
			7. Shift solenoid valve B	AT-139
			8. Control valve assembly	AT-216
		OFF vehicle	9. Reverse clutch	AT-279
			10. High clutch	AT-284
			11. Brake band	AT-307
			12. Low & reverse brake	AT-295
			13. Oil pump	AT-260
			14. Torque converter	AT-240
	Transaxle noise in “D”, “2”, “1” and “R” positions.	ON vehicle	1. A/T fluid level	MA-22
		OFF vehicle	2. Torque converter	AT-240
	Engine brake does not operate in “1” position.	ON vehicle	1. PNP switch adjustment	AT-219
			2. Control cable adjustment	AT-207
			3. Vehicle speed sensor·A/T (Revolution sensor) and vehicle speed sensor·MTR	AT-96, AT-149
			4. Control valve assembly	AT-216
			5. Overrun clutch solenoid valve	AT-144
		OFF vehicle	6. Overrun clutch	AT-288
			7. Low & reverse brake	AT-295
	Transaxle overheats.	ON vehicle	1. A/T fluid level	MA-22
			2. Engine idling speed	EC-73
			3. Accelerator pedal position sensor	EC-493
			4. Line pressure test	AT-48
			5. Line pressure solenoid valve	AT-129
			6. Control valve assembly	AT-216
		OFF vehicle	7. Oil pump	AT-260
			8. Reverse clutch	AT-279
			9. High clutch	AT-284
			10. Brake band	AT-307
			11. Forward clutch	AT-288
			12. Overrun clutch	AT-288
			13. Low & reverse brake	AT-295
			14. Torque converter	AT-240

Items	Symptom	Condition	Diagnostic item	Reference page
Others	ATF shoots out during operation. White smoke emitted from exhaust pipe during operation.	ON vehicle	1. A/T fluid level	MA-22
		OFF vehicle	2. Reverse clutch	AT-279
			3. High clutch	AT-284
			4. Brake band	AT-307
			5. Forward clutch	AT-288
			6. Overrun clutch	AT-288
			7. Low & reverse brake	AT-295
	Unusual smell at A/T fluid charging pipe.	ON vehicle	1. A/T fluid level	MA-22
		OFF vehicle	2. Torque converter	AT-240
			3. Oil pump	AT-260
			4. Reverse clutch	AT-279
			5. High clutch	AT-284
			6. Brake band	AT-307
			7. Forward clutch	AT-288
			8. Overrun clutch	AT-288
			9. Low & reverse brake	AT-295

TCM Terminal and Reference Value

INFOID:0000000001703192

TCM HARNESS CONNECTOR TERMINAL LAYOUT

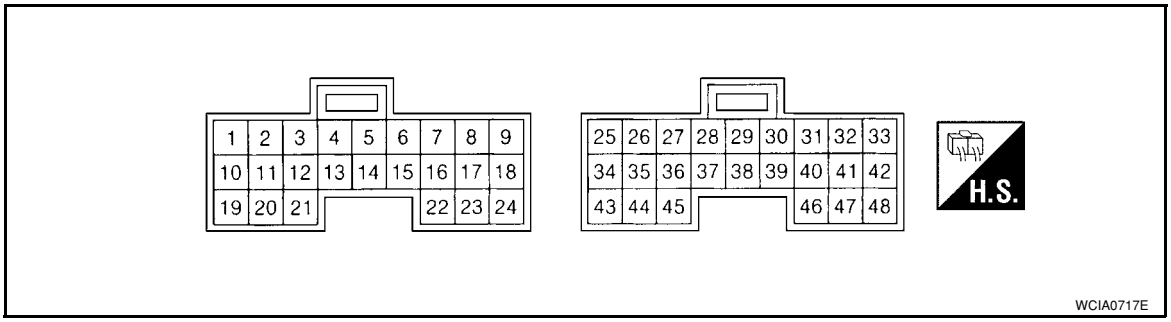

Terminals and Reference Values for TCM

TCM terminal data are reference values, measured between each terminal and ground.

Terminal	Wire color	Item	Condition		Judgement standard (Approx.)
1	W	Line pressure solenoid valve		When releasing accelerator pedal after warming up engine.	1.5 - 3.0 V
				When depressing accelerator pedal fully after warming up engine.	0 V
2	P	Line pressure solenoid valve (with dropping resistor)		When releasing accelerator pedal after warming up engine.	4 - 14 V
				When depressing accelerator pedal fully after warming up engine.	0 V
3	GR	Torque converter clutch solenoid valve		When A/T performs lock-up.	8 - 15 V
				When A/T does not perform lock-up.	0 V
5	L	CAN H	—		—
6	P	CAN L	—		—
10	R	Power supply	When turning ignition switch to “ON”.		Battery voltage
			When turning ignition switch to “OFF”.		0 V

Terminal	Wire color	Item	Condition		Judgement standard (Approx.)
11	O	Shift solenoid valve A		When shift solenoid valve A operates. (When driving in “D1” or “D4”.)	Battery voltage
				When shift solenoid valve A does not operate. (When driving in “D2” or “D3”.)	0 V
12	G	Shift solenoid valve B		When shift solenoid valve B operates. (When driving in “D1” or “D2”.)	Battery voltage
				When shift solenoid valve B does not operate. (When driving in “D3” or “D4”.)	0 V
19	R	Power supply	When turning ignition switch to “ON”.		Battery voltage
			When turning ignition switch to “OFF”.		0 V
20	V	Overrun clutch solenoid valve		When overrun clutch solenoid valve operates. (When overrun clutch disengaged. Refer to AT-19 .)	Battery voltage
				When overrun clutch solenoid valve does not operate. (When overrun clutch engaged. Refer to AT-19 .)	0 V
25	B	Ground	Always		0 V
26	Y	PNP switch “1” position	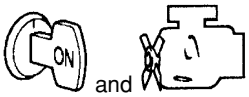	When setting selector lever to “1” position.	Battery voltage
				When setting selector lever to other positions.	0 V
27	G	PNP switch “2” position		When setting selector lever to “2” position.	Battery voltage
				When setting selector lever to other positions.	0 V
28	GR	Power supply (memory back-up)	Always		Battery voltage
29	V	Revolution sensor		When driving at 20 km/h (12 MPH)	150 Hz
30*1	BR	CONSULT- III (RX)	—		—
31*1	Y	CONSULT- III (TX)	—		—
34	LG	PNP switch “D” position	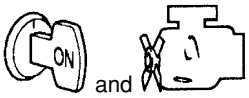	When setting selector lever to “D” position.	Battery voltage
				When setting selector lever to other positions.	0 V
35	SB	PNP switch “R” position		When setting selector lever to “R” position.	Battery voltage
				When setting selector lever to other positions.	0 V
36	R	PNP switch “N” or “P” position		When setting selector lever to “N” or “P” position.	Battery voltage
				When setting selector lever to other positions.	0 V
38	G	Turbine revolution sensor (power train revolution sensor)		When driving at 20 km/h (12 MPH)	360 Hz

Terminal	Wire color	Item	Condition		Judgement standard (Approx.)
39*2	L	Engine speed signal	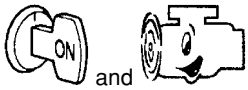	Refer to EC-102 .	
40	O	Vehicle speed sensor		When driving vehicle at 2 to 3 km/h (1 to 2 MPH) for 1 m (3 ft) or more.	Voltage varies between less than 0 V and more than 4.5 V
42	B	Sensor ground	Always		0 V
47	BR	A/T fluid temperature sensor	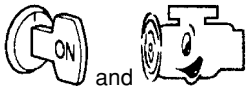	When A/T fluid temperature is 20°C (68°F).	1.5 V
				When A/T fluid temperature is 80°C (176°F).	0.5 V
48	B	Ground	Always		0 V

*1: These terminals are connected to the data link connector.

*2: These terminals are connected to the ECM.

CONSULT-III Function (A/T)

INFOID:0000000001703193

CONSULT-III can display each diagnostic item using the diagnostic test models shown following.

FUNCTION

Diagnostic test mode	Function
Work support	This mode enables a technician to adjust some devices faster and more accurately by following the indications on CONSULT-III.
Self-diagnostic results	Self-diagnostic results can be read and erased quickly.
Data monitor	Input/Output data in the TCM can be read.
CAN diagnostic support monitor	The results of transmit/receive diagnosis of CAN communication can be read.
Function test	Performed by CONSULT-III instead of a technician to determine whether each system is “OK” or “NG”.
DTC work support	Select the operating condition to confirm Diagnostic Trouble Codes.
TCM part number	TCM part number can be read.

CONSULT-III REFERENCE VALUE

NOTICE:

1. The CONSULT-III electrically displays shift timing and lock-up timing (that is, operation timing of each solenoid).
   Check for time difference between actual shift timing and the CONSULT-III display. If the difference is noticeable, mechanical parts (except solenoids, sensors, etc.) may be malfunctioning. Check mechanical parts using applicable diagnostic procedures.
2. Shift schedule (which implies gear position) displayed on CONSULT-III and that indicated in Service Manual may differ slightly. This occurs because of the following reasons:
- Actual shift schedule has more or less tolerance or allowance,
- Shift schedule indicated in Service Manual refers to the point where shifts start, and
- Gear position displayed on CONSULT-III indicates the point where shifts are completed.
3. Shift solenoid valve “A” or “B” is displayed on CONSULT-III at the start of shifting. Gear position is displayed upon completion of shifting (which is computed by TCM).

Item name	Condition	Display value (Approx.)
VHCL/S SE-A/T	During driving	Approximately matches the speedometer reading.
VHCL/S SE-MTR		
THROTTLE POSI	Released accelerator pedal.	0.0/8
	Fully depressed accelerator pedal.	8.0/8

Item name	Condition	Display value (Approx.)
FLUID TEMP SE	When A/T fluid temperature is 20°C (68°F).	1.5 V
	When A/T fluid temperature is 80°C (176°F).	0.5 V
BATTERY VOLT	When turning ignition switch to “ON”.	Battery voltage
ENGINE SPEED	Engine running	Approximately matches the tachometer reading.
TURBINE REV	During driving (lock-up ON)	Approximately matches the engine speed.
OVERDRIVE SW	When overdrive control switch is depressed.	ON
	When overdrive control switch is released.	OFF
PN POSI SW	When setting selector lever to “N” or “P” position.	ON
	When setting selector lever to other positions.	OFF
R POSITION SW	When setting selector lever to “R” position.	ON
	When setting selector lever to other positions.	OFF
D POSITION SW	When setting selector lever to “D” position.	ON
	When setting selector lever to other positions.	OFF
2 POSITION SW	When setting selector lever to “2” position.	ON
	When setting selector lever to other positions.	OFF
1 POSITION SW	When setting selector lever to “1” position.	ON
	When setting selector lever to other positions.	OFF
CLOSED THL/SW	Released accelerator pedal.	ON
	Depressed accelerator pedal.	OFF
W/O THRL/P-SW	Fully depressed accelerator pedal.	ON
	Released accelerator pedal.	OFF
SHIFT S/V A	When shift solenoid valve A operates. (When driving in “D1” or “D4”.)	ON
	When shift solenoid valve A does not operate. (When driving in “D2” or “D3”.)	OFF
SHIFT S/V B	When shift solenoid valve B operates. (When driving in “D1” or “D2”.)	ON
	When shift solenoid valve B does not operate. (When driving in “D3” or “D4”.)	OFF
OVERRUN/C S/V	When overrun clutch solenoid valve operates. (When overrun clutch disengaged. Refer to AT-19 .)	ON
	When overrun clutch solenoid valve does not operate. (When overrun clutch engaged. Refer to AT-19 .)	OFF
BRAKE SW	Depressed brake pedal.	ON
	Released brake pedal.	OFF
GEAR	During driving	1, 2, 3, 4
SLCT LVR POSI	When setting selector lever to “N” or “P” positions.	N · P
	When setting selector lever to “R” position.	R
	When setting selector lever to “D” position.	D
	When setting selector lever to “2” position.	2
	When setting selector lever to “1” position.	1
VEHICLE SPEED	During driving	Approximately matches the speedometer reading.

Item name	Condition	Display value (Approx.)
LINE PRES DTY	Line pressure low ⇔ Line pressure high	0 % ⇔ 94 %
TCC S/V DUTY	Lock-up OFF ⇔ Lock-up ON	4 % ⇔ 94 %

SELF-DIAGNOSTIC RESULT MODE

After performing AT-78, "Diagnosis Procedure without CONSULT-III" , place check marks for results on the AT-40, "How to Perform Trouble Diagnosis for Quick and Accurate Repair" . Reference pages are provided following the items.

Display Items List

Items (CONSULT-III screen terms)	Malfunction is detected when...	OBD-II (DTC)	Reference page
		MIL indicator lamp*1, "ENGINE" with CONSULT-III or GST	
CAN COMM CIRCUIT	• When TCM is not transmitting or receiving CAN communication signal for 2 seconds or more.	U1000	AT-83
PNP SW/CIRC	• TCM does not receive the correct voltage signal (based on the gear position) from the switch.	P0705	AT-86
ATF TEMP SEN/CIRC	• TCM receives an excessively low or high voltage from the sensor.	P0710	AT-91
VHCL SPEED SEN-A/T	• TCM does not receive the proper voltage signal from the sensor.	P0720	AT-96
ENGINE SPEED SIG	• TCM does not receive the proper voltage signal from the ECM.	P0725	AT-101
A/T 1ST GR FNCTN	• A/T cannot be shifted to the 1st gear position even if electrical circuit is good.	P0731*2	AT-105
A/T 2ND GR FNCTN	• A/T cannot be shifted to the 2nd gear position even if electrical circuit is good.	P0732*2	AT-108
A/T 3RD GR FNCTN	• A/T cannot be shifted to the 3rd gear position even if electrical circuit is good.	P0733*2	AT-111
A/T 4TH GR FNCTN	• A/T cannot be shifted to the 4th gear position even if electrical circuit is good.	P0734*2	AT-114
T/C CLUTCH SOL/V	• TCM detects an improper voltage drop when it tries to operate the solenoid valve.	P0740	AT-119
A/T TCC S/V FNCTN	• A/T cannot perform lock-up even if electrical circuit is good.	P0744*2	AT-124
LINE PRESSURE S/V	• TCM detects an improper voltage drop when it tries to operate the solenoid valve.	P0745	AT-129
SHIFT SOLENOID/V A	• TCM detects an improper voltage drop when it tries to operate the solenoid valve.	P0750	AT-134
SHIFT SOLENOID/V B	• TCM detects an improper voltage drop when it tries to operate the solenoid valve.	P0755	AT-139
OVERRUN CLUTCH S/V	• TCM detects an improper voltage drop when it tries to operate the solenoid valve.	P1760	AT-144
VHCL SPEED SEN-MTR	• TCM does not receive the proper voltage signal from the sensor.	—	AT-149
BATT/FLUID TEMP SEN	• TCM receives an excessively low or high voltage from the sensor.	—	AT-152
TURBINE SENSOR	• TCM does not receive proper voltage signal from sensor.	—	AT-158
CONTROL UNIT (RAM)	• TCM memory (RAM) is malfunctioning.	—	AT-163

Items (CONSULT-III screen terms)	Malfunction is detected when...	OBD-II (DTC)	Reference page
		MIL indicator lamp*1, "ENGINE" with CONSULT-III or GST	
CONTROL UNIT (ROM)	• TCM memory (ROM) is malfunctioning.	—	AT-163
No failure (NO SELF DIAGNOSTIC FAILURE INDICATED FURTHER TESTING MAY BE REQUIRED)	• No failure has been detected.	—	—

*1: Refer to AT-38, "Malfunction Indicator Lamp (MIL)" .

*2: These malfunctions cannot be displayed MIL if another malfunction is assigned to MIL.

DATA MONITOR MODE

Display Items List

X: Standard, —: Not applicable, ▼: Option

Monitored item (Unit)	Monitor Item Selection			Remarks
	TCM INPUT SIGNALS	MAIN SIGNALS	SELECTION FROM MENU	
VHCL/S SE-A/T (km/h)	X	—	▼	Revolution sensor
VHCL/S SE-MTR (km/h)	X	—	▼	Vehicle speed display may not be accurate under approx. 10 km/h (6 mph). It may not indicate 0 km/h (0 mph) when vehicle is stationary.
THRTL POS SEN (V)	X	—	▼	
FLUID TEMP SE (V)	X	—	▼	
BATTERY VOLT (V)	X	—	▼	
ENGINE SPEED (rpm)	X	X	▼	
TURBINE REV (rpm)	X	—	▼	
OVERDRIVE SW (ON/OFF)	X	—	▼	
PN POSI SW (ON/OFF)	X	—	▼	
R POSITION SW (ON/OFF)	X	—	▼	
D POSITION SW (ON/OFF)	X	—	▼	
2 POSITION SW (ON/OFF)	X	—	▼	
1 POSITION SW (ON/OFF)	X	—	▼	
ASCD-CRUISE (ON/OFF)	X	—	▼	Signal input with CAN communication.
ASCD-OD CUT (ON/OFF)	X	—	▼	
KICKDOWN SW (ON/OFF)	X	—	▼	Not mounted but displayed.
POWERSHIFT SW (ON/OFF)	X	—	▼	
CLOSED THL/SW (ON/OFF)	X	—	▼	Signal input with CAN communication.
W/O THRL/P-SW (ON/OFF)	X	—	▼	

Monitored item (Unit)	Monitor Item Selection			Remarks
	TCM INPUT SIGNALS	MAIN SIGNALS	SELECTION FROM MENU	
*SHIFT S/V A (ON/OFF)	—	—	▼	Displays status of check signal (reinput signal) for TCM control signal output. Remains unchanged when solenoid valves are open or shorted.
*SHIFT S/V B (ON/OFF)	—	—	▼	
*OVRRUN/C S/V (ON/OFF)	—	—	▼	
HOLD SW (ON/OFF)	X	—	▼	Not mounted but displayed.
BRAKE SW (ON/OFF)	X	—	▼	Stop lamp switch (Signal input with CAN communication)
GEAR	—	X	▼	Gear position recognized by the TCM updated after gear-shifting
SLCT LVR POSI	—	X	▼	Selector lever position is recognized by the TCM. For fail-safe operation, the specific value used for control is displayed.
VEHICLE SPEED (km/h)	—	X	▼	Vehicle speed recognized by the TCM.
THROTTLE POSI (0.0/8)	—	X	▼	Degree of opening for accelerator recognized by the TCM For fail-safe operation, the specific value used for control is displayed.
LINE PRES DTY (%)	—	X	▼	
TCC S/V DUTY (%)	—	X	▼	
SHIFT S/V A (ON/OFF)	—	X	▼	
SHIFT S/V B (ON/OFF)	—	X	▼	
OVERRUN/C S/V (ON/OFF)	—	X	▼	
SELF-D DP LMP (ON/OFF)	—	X	▼	
TC SLIP RATIO (0.000)	—	—	▼	
TC SLIP SPEED (rpm)	—	—	▼	Difference between engine speed and torque converter input shaft speed
Voltage (V)	—	—	▼	Displays the value measured by the voltage probe.
Frequency (Hz)	—	—	▼	The value measured by the pulse probe is displayed.
DUTY-HI (high) (%)	—	—	▼	
DUTY-LOW (low) (%)	—	—	▼	
PLS WIDTH-HI (ms)	—	—	▼	
PLS WIDTH-LOW (ms)	—	—	▼	

CAN DIAGNOSTIC SUPPORT MONITOR MODE

Refer to LAN-12, "CAN Diagnostic Support Monitor".

DTC WORK SUPPORT MODE

Display Items List

DTC work support item	Description	Check item
1ST GR FNCTN P0731	Following items for “A/T 1st gear function (P0731)” can be confirmed. • Self-diagnosis status (whether the diagnosis is being performed or not) • Self-diagnostic results (OK or NG)	• Shift solenoid valve A • Shift solenoid valve B • Each clutch • Hydraulic control circuit
2ND GR FNCTN P0732	Following items for “A/T 2nd gear function (P0732)” can be confirmed. • Self-diagnosis status (whether the diagnosis is being performed or not) • Self-diagnostic results (OK or NG)	• Shift solenoid valve B • Each clutch • Hydraulic control circuit
3RD GR FNCTN P0733	Following items for “A/T 3rd gear function (P0733)” can be confirmed. • Self-diagnosis status (whether the diagnosis is being performed or not) • Self-diagnostic results (OK or NG)	• Shift solenoid valve A • Each clutch • Hydraulic control circuit
4TH GR FNCTN P0734	Following items for “A/T 4th gear function (P0734)” can be confirmed. • Self-diagnosis status (whether the diagnosis is being performed or not) • Self-diagnostic results (OK or NG)	• Shift solenoid valve A • Shift solenoid valve B • Overrun clutch solenoid valve • Line pressure solenoid valve • Each clutch • Hydraulic control circuit
TCC S/V FNCTN P0744	Following items for “A/T TCC S/V function (lock-up) (P0744)” can be confirmed. • Self-diagnosis status (whether the diagnosis is being performed or not) • Self-diagnostic results (OK or NG)	• Torque converter clutch solenoid valve • Each clutch • Hydraulic control circuit

Diagnosis Procedure without CONSULT-III

INFOID:0000000001703194

TCM SELF-DIAGNOSTIC PROCEDURE

Description

If a malfunction occurs in electrical system, turning ignition switch ON will illuminate OD OFF indicator lamp for 2 seconds. To detect a malfunction, entering a self-diagnosis start signal retrieves information on malfunctions from memory and indicates malfunction by blinking OD OFF indicator lamp.

Diagnostic Procedure

1. CHECK OD OFF INDICATOR LAMP

1. Park vehicle on flat surface.
2. Move selector lever to “P” position.
3. Turn ignition switch OFF. Wait at least 5 seconds.

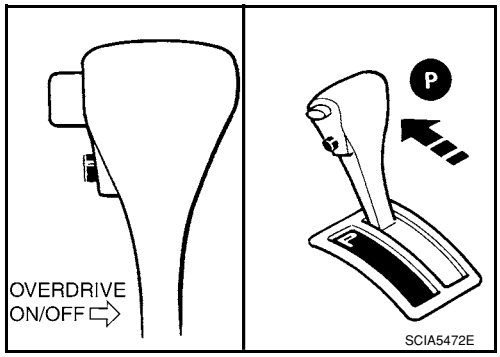

4. Turn ignition switch ON. (Do not start engine.)

Does OD OFF indicator lamp come on about 2 seconds?

YES >> GO TO 2.
NO >> Stop procedure. Perform AT-176, "OD OFF Indicator Lamp Does Not Come On" before proceeding.

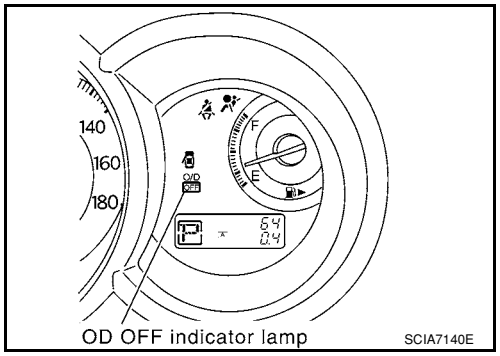

2. JUDGEMENT PROCEDURE STEP 1

1. Turn ignition switch OFF.
2. Keep pressing shift lock release button.
3. Move selector lever from “P” to “D” position.
4. Turn ignition switch ON. (Do not start engine.)
5. Keep pressing overdrive control switch while OD OFF indicator lamp is lighting up for 2 seconds. (OD OFF indicator lamp is on.)
6. Keep pressing overdrive control switch and shift selector lever to the “2” position. (OD OFF indicator lamp is on.)
7. Stop pressing overdrive control switch. (OD OFF indicator lamp is on.)
8. Shift selector lever to the “1” position. (OD OFF indicator lamp is on.)
9. Keep pressing overdrive control switch. (OD OFF indicator lamp is off.)
10. Depress accelerator pedal fully while pressing overdrive control switch.

>> GO TO 3.

3. CHECK SELF-DIAGNOSIS CODE

Check OD OFF indicator lamp. Refer to "Judgement of Self-diagnosis Code" .

>> **DIAGNOSIS END**

Judgement of Self-diagnosis Code

OD OFF indicator lamp	
All judgement flickers are the same. 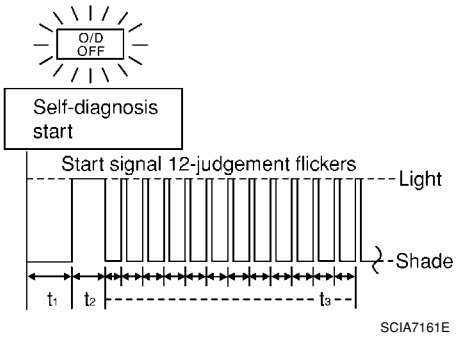 All circuits that can be confirmed by self-diagnosis are OK.	1st judgement flicker is longer than others. 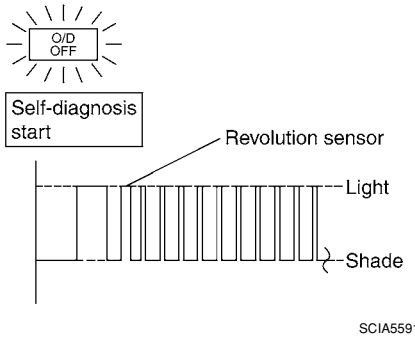 Revolution sensor circuit is short-circuited or disconnected. ⇒ **Go to AT-96 .**
2nd judgement flicker is longer than others. 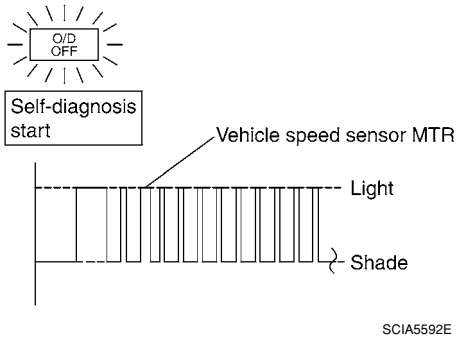 Vehicle speed sensor circuit is short-circuited or disconnected. ⇒ **Go to AT-149 .**	4th judgement flicker is longer than others. 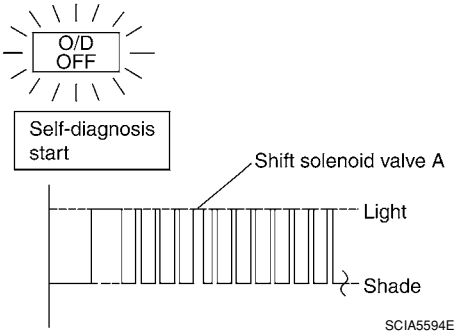 Shift solenoid valve A circuit is short-circuited or disconnected. ⇒ **Go to AT-134 .**
5th judgement flicker is longer than others. 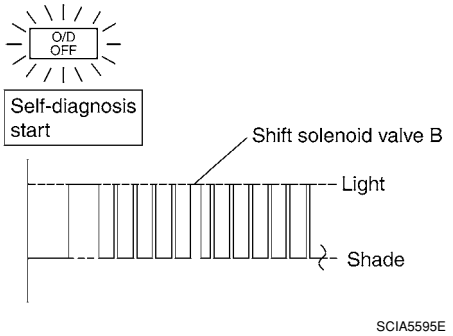 Shift solenoid valve B circuit is short-circuited or disconnected. ⇒ **Go to AT-139 .**	6th judgement flicker is longer than others. 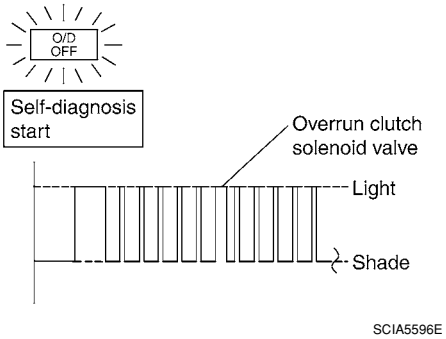 Overrun clutch solenoid valve circuit is short-circuited or disconnected. ⇒ **Go to AT-144 .**

OD OFF indicator lamp	
7th judgement flicker is longer than others. 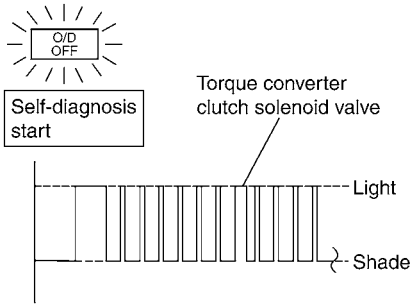 SCIA5597E Torque converter clutch solenoid valve circuit is short-circuited or disconnected. ⇒ **Go to AT-119 .**	8th judgement flicker is longer than others. 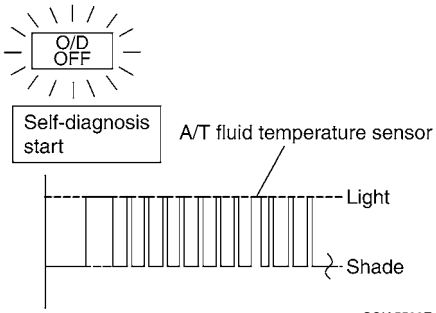 SCIA5598E A/T fluid temperature sensor is disconnected or TCM power supply circuit is damaged. ⇒ **Go to AT-152 .**
9th judgement flicker is longer than others. 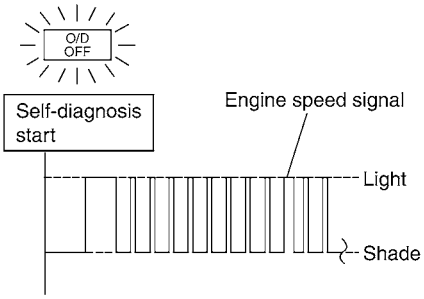 SCIA5599E Engine speed signal circuit is short-circuited or disconnected. ⇒ **Go to AT-101 .**	10th judgement flicker is longer than others. 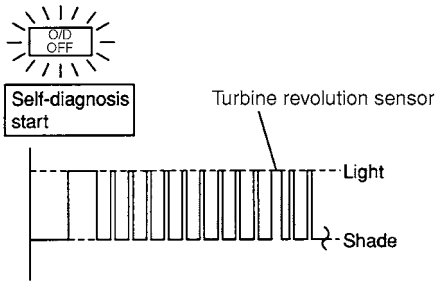 SCIA7082E Turbine revolution sensor (power train revolution sensor) circuit is short-circuited or disconnected. ⇒ **Go to AT-158 .**

OD OFF indicator lamp	
11th judgement flicker is longer than others. 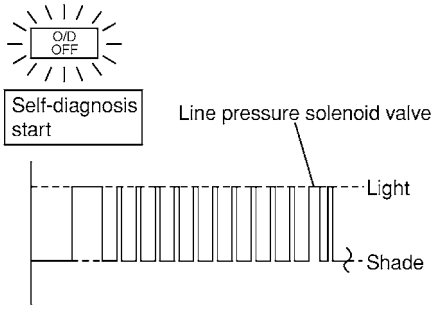 SCIA7083E Line pressure solenoid valve circuit is short-circuited or disconnected. ⇒ **Go to AT-129 .**	12th judgement flicker is longer than others. 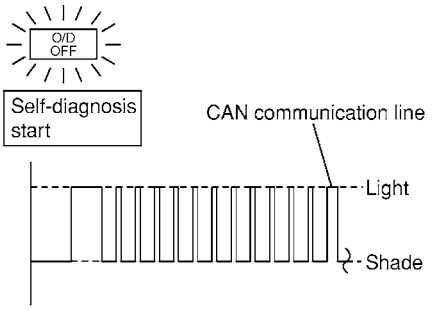 SCIA7085E CAN communication line is damaged. ⇒ **Go to AT-83 .**
Lamp turns off. SCIA4674E Park/neutral position (PNP) switch, overdrive control switch, closed throttle position signal or wide open throttle position signal circuit is disconnected or TCM is damaged. (Because overdrive control switch signal, closed throttle position signal and wide open throttle position signal are input via CAN communication line malfunction may continue after self-diagnosis.) ⇒ **Go to AT-200, "TCM Self-Diagnosis Does Not Activate" .**	

t_1 = 2.5 seconds t_2 = 2.0 seconds t_3 = 1.0 second

How to Erase Self-diagnostic Results

1. If the ignition switch stays ON after repair work, be sure to turn ignition switch OFF once. Wait for at least 5 seconds and then turn it ON again.
2. Perform "Diagnostic Procedure Without CONSULT-III" .
3. Turn ignition switch OFF. (The self-diagnostic results will be erased.)

DTC U1000 CAN COMMUNICATION LINE

Description

INFOID:0000000001703195

CAN (Controller Area Network) is a serial communication line for real time application. It is an on-vehicle multiplex communication line with high data communication speed and excellent malfunction detection ability. Many electronic control units are equipped onto a vehicle, and each control unit shares information and links with other control units during operation (not independent). In CAN communication, control units are connected with 2 communication lines (CAN H line, CAN L line) allowing a high rate of information transmission with less wiring. Each control unit transmits/receives data but selectively reads required data only.

On Board Diagnosis Logic

INFOID:0000000001703196

- This is an OBD-II self-diagnostic item.
- Diagnostic trouble code “U1000 CAN COMM CIRCUIT” with CONSULT-III or 12th judgement flicker without CONSULT-III is detected when TCM cannot communicate to other control units.

Possible Cause

INFOID:0000000001703197

Harness or connector
(CAN communication line is open or shorted.)

DTC Confirmation Procedure

INFOID:0000000001703198

CAUTION:
If performing this “DTC Confirmation Procedure” again, always turn ignition switch OFF and wait at least 10 seconds before continuing.
After the repair, perform the following procedure to confirm the malfunction is eliminated.

WITH CONSULT-III

1. Turn ignition switch ON.
2. Select “DATA MONITOR” mode for “A/T” with CONSULT-III.
3. Touch “START”.
4. Wait at least 6 seconds or start engine and wait for at least 6 seconds.
5. If DTC is detected, go to AT-85, "Diagnosis Procedure".

WITH GST

Follow the procedure “WITH CONSULT-III”.

WITHOUT CONSULT-III

1. Turn ignition switch ON.
2. Wait at least 6 seconds or start engine and wait at least 6 seconds.
3. Perform self-diagnosis. Refer to AT-78, "Diagnosis Procedure without CONSULT-III".
4. If DTC is detected, go to AT-85, "Diagnosis Procedure".

Wiring Diagram - AT - CAN

INFOID:0000000001703199

AT-CAN-01

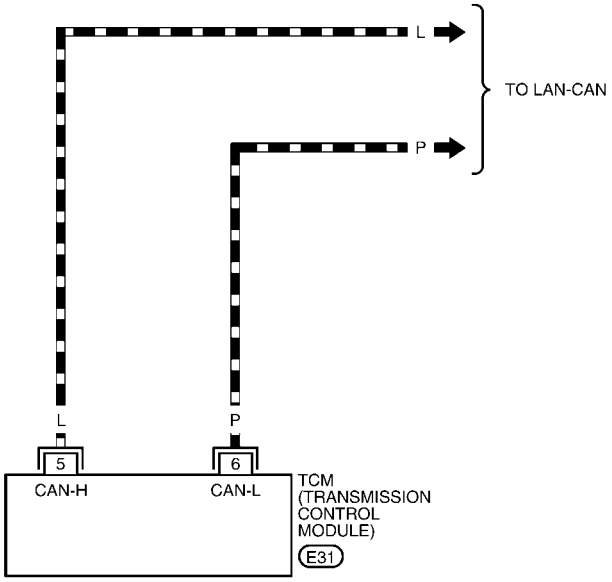

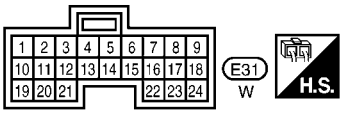

BCWA0648E

TCM TERMINALS AND REFERENCE VALUES

Refer to AT-71, "TCM Terminal and Reference Value".

Diagnosis Procedure

INFOID:0000000001703200

1. CHECK CAN COMMUNICATION CIRCUIT

With CONSULT-III

1. Turn ignition switch ON and start engine.
2. Select “SELF-DIAG RESULTS” mode for “A/T” with CONSULT-III.

Is any malfunction of the “U1000 CAN COMM CIRCUIT” indicated?

YES >> Print out CONSULT-III screen, Go to LAN section. Refer to LAN-23, "CAN System Specification Chart".

NO >> **INSPECTION END**

DTC P0705 PARK/NEUTRAL POSITION (PNP) SWITCH

Description

INFOID:0000000001703201

- The PNP switch assembly includes a transaxle range switch.
- The transaxle range switch detects the selector lever position and sends a signal to the TCM.

CONSULT-III Reference Value in Data Monitor Mode

INFOID:0000000001703202

Item name	Condition	Display value
PN POSI SW	When setting selector lever to “N” or “P” position.	ON
	When setting selector lever to other positions.	OFF
R POSITION SW	When setting selector lever to “R” position.	ON
	When setting selector lever to other positions.	OFF
D POSITION SW	When setting selector lever to “D” position.	ON
	When setting selector lever to other positions.	OFF
2 POSITION SW	When setting selector lever to “2” position.	ON
	When setting selector lever to other positions.	OFF
1 POSITION SW	When setting selector lever to “1” position.	ON
	When setting selector lever to other positions.	OFF

On Board Diagnosis Logic

INFOID:0000000001703203

- This is an OBD-II self-diagnostic item.
- Diagnostic trouble code “P0705 PNP SW/CIRC” with CONSULT-III is detected when TCM does not receive the correct voltage signal from the switch based on the gear position.

Possible Cause

INFOID:0000000001703204

- Harness or connectors
  [The PNP switch circuit is open or shorted.]
- PNP switch

DTC Confirmation Procedure

INFOID:0000000001703205

CAUTION:
- **Always drive vehicle at a safe speed.**
- **If performing this “DTC Confirmation Procedure” again, always turn ignition switch OFF and wait at least 10 seconds before continuing.**

After the repair, perform the following procedure to confirm the malfunction is eliminated.

WITH CONSULT-III

1. Turn ignition switch ON. (Do not start engine.)
2. Select “DATA MONITOR” mode for “A/T” with CONSULT-III.
3. Touch “START”.
4. Start engine and maintain the following conditions for at least 5 consecutive seconds.
   VEHICLE SPEED: 10 km/h (6 MPH) or more
   THROTTLE POSI: More than 1.0/8
   SLCT LVR POSI: “D” position
5. If the check result is NG, go to AT-88, "Diagnosis Procedure" .

WITH GST

Follow the procedure “WITH CONSULT-III”.

Wiring Diagram - AT - PNP/SW

INFOID:0000000001703206

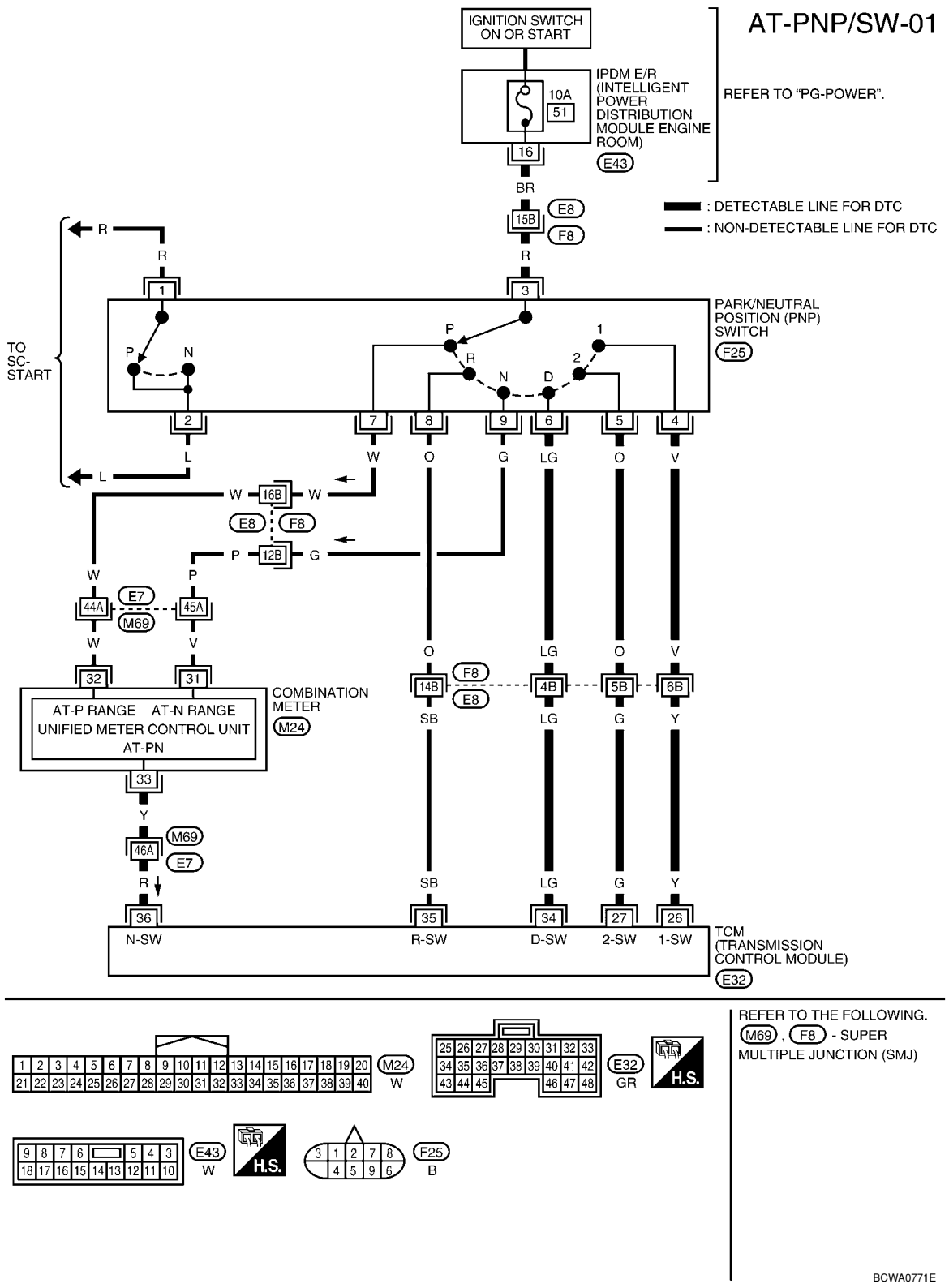

TCM TERMINALS AND REFERENCE VALUES

Refer to AT-71, "TCM Terminal and Reference Value".

Diagnosis Procedure

INFOID:0000000001703207

1. CHECK INPUT SIGNAL

With CONSULT-III

1. Turn ignition switch ON. (Do not start engine.)
2. Select “TCM INPUT SIGNALS” in “DATA MONITOR” mode for “A/T” with CONSULT-III.
3. Read out “P·N”, “R”, “D”, “2” and “1” position switches moving selector lever to each position.

Item name	Condition	Display value
PN POSI SW	When setting selector lever to “N” or “P” position.	ON
	When setting selector lever to other positions.	OFF
R POSITION SW	When setting selector lever to “R” position.	ON
	When setting selector lever to other positions.	OFF
D POSITION SW	When setting selector lever to “D” positions.	ON
	When setting selector lever to other positions.	OFF
2 POSITION SW	When setting selector lever to “2” position.	ON
	When setting selector lever to other positions.	OFF
1 POSITION SW	When setting selector lever to “1” position.	ON
	When setting selector lever to other positions.	OFF

OK or NG

OK >> GO TO 6.
NG >> GO TO 3.

2. CHECK INPUT SIGNAL

Without CONSULT-III

1. Turn ignition switch ON. (Do not start engine.)
2. Check voltage between TCM connector terminals and ground while moving selector lever through each position.

Selector lever position	Terminal				
	36	35	34	27	26
P, N	B	0	0	0	0
R	0	B	0	0	0
D	0	0	B	0	0
2	0	0	0	B	0
1	0	0	0	0	B

B: Battery voltage
0: 0V

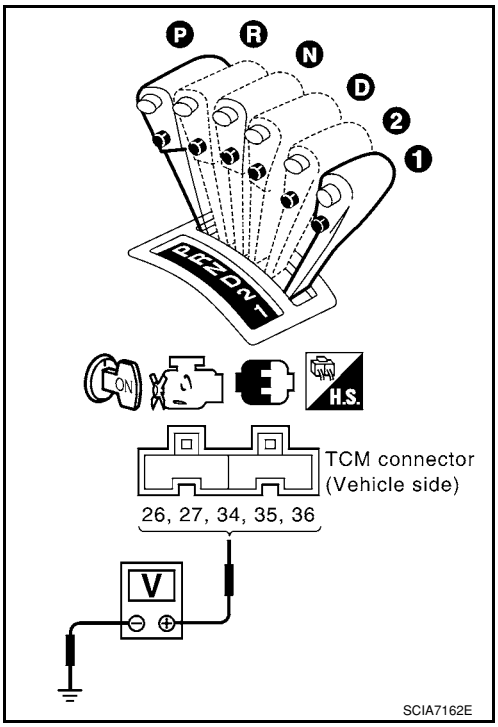

OK or NG

OK >> GO TO 6.

NG >> GO TO 3.

3. CHECK PNP SWITCH

1. Turn ignition switch OFF.
2. Disconnect PNP switch harness connector.
3. Check continuity between PNP switch harness connector terminals.

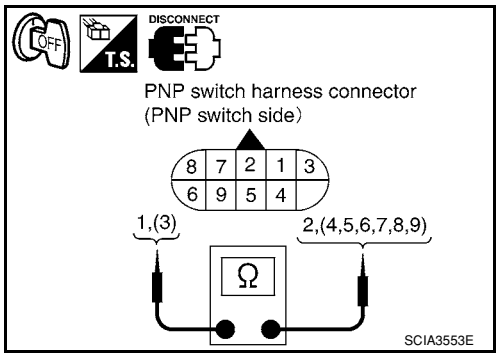

Selector lever position	Connector	Terminal	Continuity
P	F25	1 - 2, 3 - 7	Yes *Continuity should not exist in positions other than the specified positions.
R		3 - 8	
N		1 - 2, 3 - 9	
D		3 - 6	
2		3 - 5	
1		3 - 4	

OK or NG

OK >> GO TO 5.
NG >> GO TO 4.

4. CHECK CONTROL CABLE ADJUSTMENT

Check PNP switch again with control cable disconnected from manual shaft of A/T assembly. Refer to test group 3.

OK or NG

OK >> Adjust control cable. Refer to AT-207, "Adjustment of A/T Position" .
NG >> Check PNP switch (Refer to test group 1) again after adjusting PNP switch (Refer to AT-219).
- If OK, **INSPECTION END**
- If NG, repair or replace PNP switch. Refer to AT-219, "Park/Neutral Position (PNP) Switch" .

5. DETECT MALFUNCTIONING ITEM

Check the following items:
- Harness for short or open between ignition switch and PNP switch.
- Harness for short or open between PNP switch and TCM.
- Harness for short or open between combination meter and PNP switch.
- Harness for short or open between combination meter and TCM.
- 10A fuse (No.51, located in the IPDM E/R)
- Combination meter. Refer to DI-4 .
- Ignition switch. Refer to PG-3 .

OK or NG

OK >> GO TO 6.
NG >> Repair or replace damaged parts.

6. CHECK DTC

Perform AT-86, "DTC Confirmation Procedure" .

OK or NG

OK >> **INSPECTION END**
NG >> GO TO 7.

7. CHECK TCM

1. Check TCM input/output signal. Refer to AT-71, "TCM Terminal and Reference Value" .
2. If NG, recheck TCM pin terminals for damage or loose connection with harness connector.

OK or NG

OK >> **INSPECTION END**
NG >> Repair or replace damaged parts.

Component Inspection

INFOID:0000000001703208

PNP SWITCH

1. Check continuity between PNP switch harness connector terminals.

Selector lever position	Connector	Terminal	Continuity
“P”	F25	1 - 2, 3 - 7	Yes *Continuity should not exist in positions other than the specified positions.
“R”		3 - 8	
“N”		1 - 2, 3 - 9	
“D”		3 - 6	
“2”		3 - 5	
“1”		3 - 4	

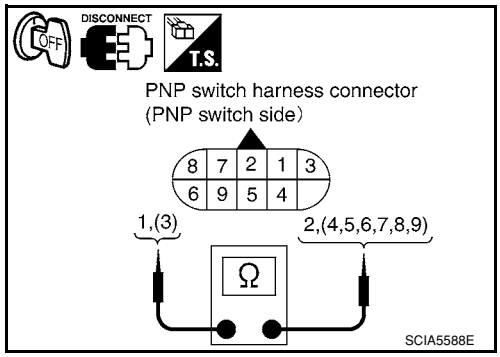

2. If NG, check again with control cable (2) disconnected from manual shaft of A/T assembly. Refer to step 1.
   (1): Lock nut
   (3): Manual shaft
3. If OK on step 2, adjust control cable (2). Refer to AT-207, "Adjustment of A/T Position" .
4. If NG on step 2, remove PNP switch from A/T and check continuity of PNP switch terminals. Refer to step 1.
5. If OK on step 4, adjust PNP switch. Refer to AT-219, "Park/Neutral Position (PNP) Switch" .
6. If NG on step 4, replace PNP switch. Refer to AT-219, "Park/Neutral Position (PNP) Switch" .

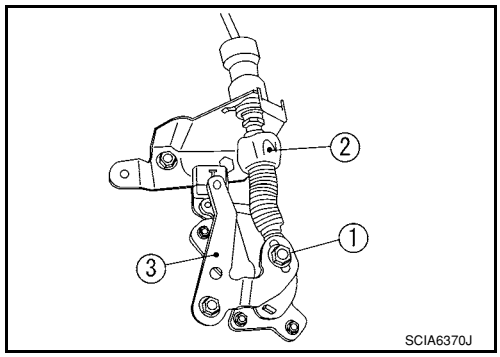

DTC P0710 A/T FLUID TEMPERATURE SENSOR CIRCUIT

Description

INFOID:0000000001703209

The A/T fluid temperature sensor detects the A/T fluid temperature and sends a signal to the TCM.

CONSULT-III Reference Value in Data Monitor Mode

INFOID:0000000001703210

Remarks: Specification data are reference values.

Item name	Condition	Display value (Approx.)
FLUID TEMP SE	When A/T fluid temperature is 20°C (68°F).	1.5 V
	When A/T fluid temperature is 80°C (176°F).	0.5 V

On Board Diagnosis Logic

INFOID:0000000001703211

- This is an OBD-II self-diagnostic item.
- Diagnostic trouble code “P0710 ATF TEMP SEN/CIRC” with CONSULT-III is detected when TCM receives an excessively low or high voltage from the sensor.

Possible Cause

INFOID:0000000001703212

- Harness or connector
  (The sensor circuit is open or shorted.)
- A/T fluid temperature sensor

DTC Confirmation Procedure

INFOID:0000000001703213

CAUTION:
- **Always drive vehicle at a safe speed.**
- **If performing this “DTC Confirmation Procedure” again, always turn ignition switch OFF and wait at least 10 seconds before continuing.**

After the repair, perform the following procedure to confirm the malfunction is eliminated.

WITH CONSULT-III

1. Turn ignition switch ON and select “DATA MONITOR” mode for “A/T” with CONSULT-III.
2. Touch “START”.
3. Start engine and maintain the following conditions for at least 10 minutes (Total). (It is not necessary to maintain continuously.)
   ENGINE SPEED: 450 rpm or more
   VEHICLE SPEED: 10 km/h (6 MPH) or more
   THROTTLE POSI: More than 1.0/8
   SLCT LVR POSI: “D” position
4. If the check result is NG, go to AT-92, "Diagnosis Procedure".

WITH GST

Follow the procedure “With CONSULT-III”.

Wiring Diagram - AT - FTS

INFOID:0000000001703214

AT-FTS-01

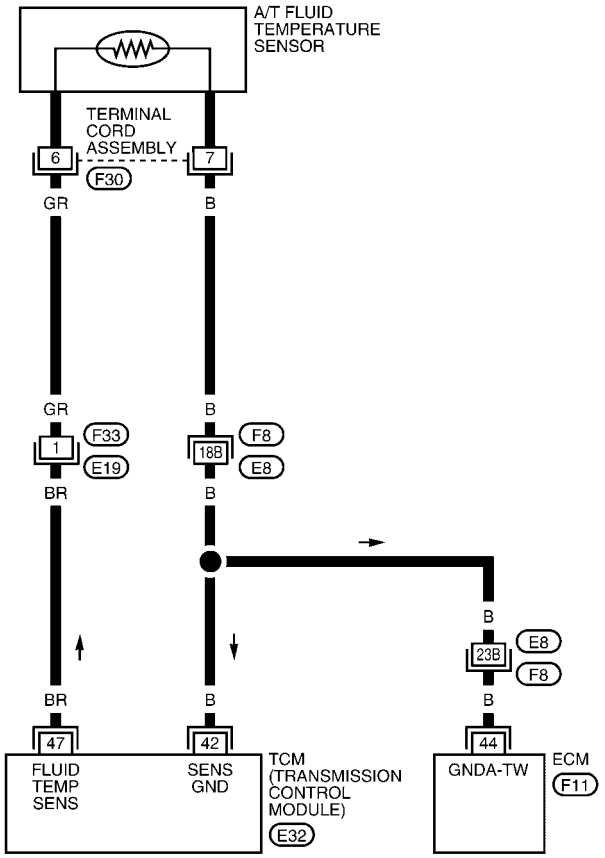

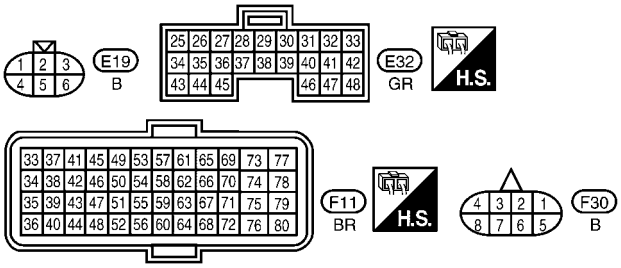

REFER TO THE FOLLOWING.
F8 - SUPER MULTIPLE JUNCTION (SMJ)

BCWA0650E

TCM TERMINALS AND REFERENCE VALUES

Refer to AT-71, "TCM Terminal and Reference Value".

Diagnosis Procedure

INFOID:0000000001703215

1.CHECK INPUT SIGNAL

With CONSULT-III

1. Start engine.
2. Select “TCM INPUT SIGNALS” in “DATA MONITOR” mode for “A/T” with CONSULT-III.
3. Read out the value of “FLUID TEMP SE”.

Item name	Condition	Display value (Approx.)
FLUID TEMP SE	When A/T fluid temperature is 20°C (68°F).	1.5 V
	When A/T fluid temperature is 80°C (176°F).	0.5 V

Without CONSULT-III

1. Start engine.
2. Check voltage TCM connector terminals while warming up A/T.

Item	Connector	Terminal	Condition	Judgement standard (Approx.)
A/T fluid temperature sensor	E32	47 - 42	When A/T fluid temperature is 20°C (68°F).	1.5 V
			When A/T fluid temperature is 80°C (176°F).	0.5 V

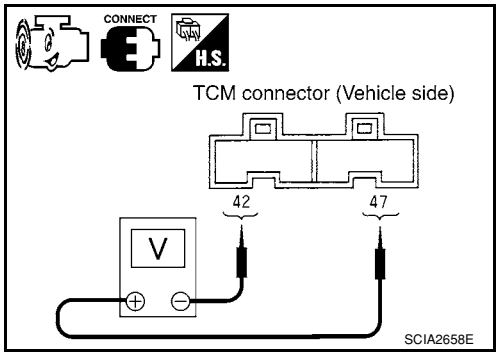

OK or NG

OK >> GO TO 7.
NG >> GO TO 2.

2. DETECT MALFUNCTIONING ITEMS

Check the following.

- Harness for short or open between TCM, ECM and terminal cord assembly
- Ground circuit for ECM, Refer to EC-137.

OK or NG

OK >> GO TO 3.
NG >> Repair or replace damaged parts.

3. CHECK FLUID TEMPERATURE SENSOR CIRCUIT

1. Turn ignition switch OFF.
2. Disconnect the TCM connector.
3. Check resistance between TCM connector terminals.

Item	Connector	Terminal	Temperature [°C (°F)]	Resistance (Approx.)
A/T fluid temperature sensor	E32	47 - 42	20 (68)	2.5 kΩ
			80 (176)	0.3 kΩ

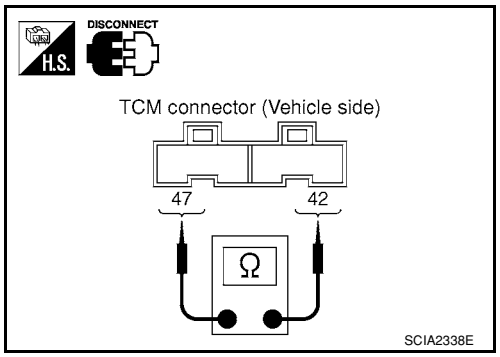

OK or NG

OK >> GO TO 7.
NG >> GO TO 4.

4. CHECK HARNESS BETWEEN TCM AND TERMINAL CORD ASSEMBLY HARNESS CONNECTOR

1. Turn ignition switch OFF.
2. Disconnect terminal cord assembly harness connector and TCM connector.

3. Check continuity between terminal cord assembly harness connector terminal and TCM connector terminal.

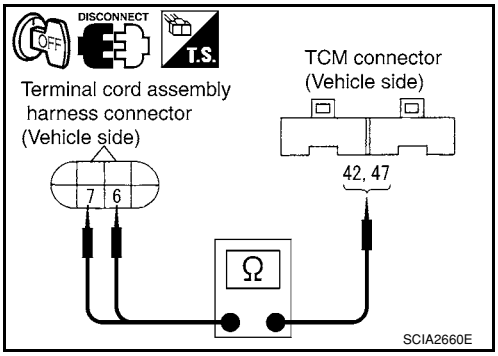

Item	Connector	Terminal	Continuity
TCM	E32	42	Yes
Terminal cord assembly harness connector	F30	7	
TCM	E32	47	Yes
Terminal cord assembly harness connector	F30	6	

4. If OK, check harness for short to ground and short to power.
5. If OK, check continuity between ground and transaxle assembly.
6. Reinstall any part removed.

OK or NG

OK >> GO TO 5.
NG >> Repair open circuit or short to ground or short to power in harness or connectors.

5. CHECK A/T FLUID TEMPERATURE SENSOR WITH TERMINAL CORD ASSEMBLY

1. Turn ignition switch OFF.
2. Disconnect terminal cord assembly harness connector in engine room.
3. Check resistance between terminal cord assembly harness connector terminals.

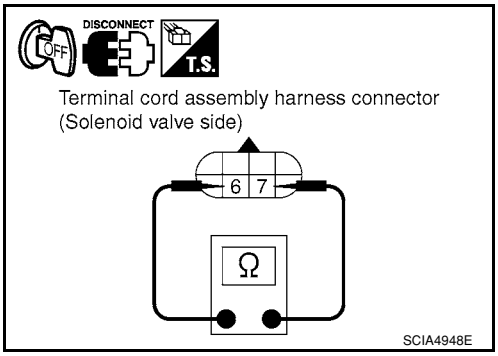

Item	Connector	Terminal	Temperature [°C (°F)]	Resistance (Approx.)
A/T fluid temperature sensor	F30	6 - 7	20 (68)	2.5 kΩ
			80 (176)	0.3 kΩ

4. Reinstall any part removed.

OK or NG

OK >> GO TO 6.
NG >> Repair or replace damaged parts.

6. DETECT MALFUNCTIONING ITEM

1. Remove oil pan. Refer to AT-216, "Control Valve Assembly and Accumulators".
2. Check the following.

- A/T fluid temperature sensor
- Check resistance between terminal cord assembly harness connector terminals while changing temperature as shown.

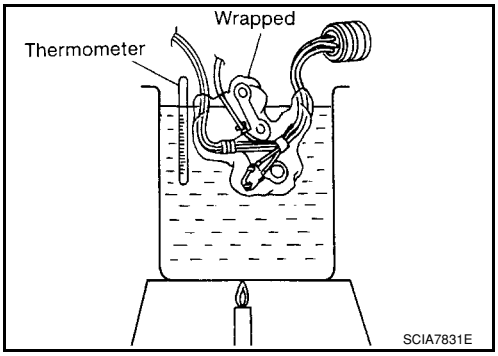

Item	Connector	Terminal	Temperature [°C (°F)]	Resistance (Approx.)
A/T fluid temperature sensor	F30	6 - 7	20 (68)	2.5 kΩ
			80 (176)	0.3 kΩ

- Harness of terminal cord assembly for short or open

OK or NG

OK >> GO TO 7.
NG >> Repair or replace damaged parts.

7. CHECK DTC

Perform AT-91, "DTC Confirmation Procedure".

OK or NG

OK >> **INSPECTION END**
NG >> GO TO 8.

8. CHECK TCM

1. Check TCM input/output signal. Refer to AT-71, "TCM Terminal and Reference Value".
2. If NG, recheck TCM pin terminals for damage or loose connection with harness connector.

OK or NG

OK >> **INSPECTION END**
NG >> Repair or replace damaged parts.

Component Inspection

INFOID:0000000001703216

A/T FLUID TEMPERATURE SENSOR

- Remove oil pan. Refer to AT-216, "Control Valve Assembly and Accumulators".
- Check resistance between terminal cord assembly harness connector terminals while changing temperature as shown.

Item	Connector	Terminal	Temperature [°C (°F)]	Resistance (Approx.)
A/T fluid temperature sensor	F30	6 - 7	20 (68)	2.5 kΩ
			80 (176)	0.3 kΩ

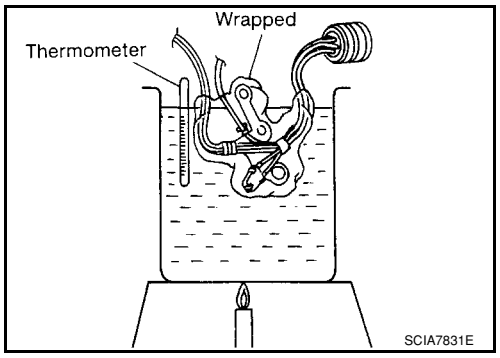

DTC P0720 VEHICLE SPEED SENSOR A/T (REVOLUTION SENSOR)

Description

INFOID:0000000001703217

The revolution sensor detects the revolution of the idler gear parking pawl lock gear and emits a pulse signal. The pulse signal is sent to the TCM which converts it into vehicle speed.

CONSULT-III Reference Value in Data Monitor Mode

INFOID:0000000001703218

Remarks: Specification data are reference values.

Item name	Condition	Display value
VHCL/S SE-A/T	During driving	Approximately matches the speedometer reading.

On Board Diagnosis Logic

INFOID:0000000001703219

- This is an OBD-II self-diagnostic item.
- Diagnostic trouble code “P0720 VHCL SPEED SEN-AT” with CONSULT-III or 1st judgement flicker without CONSULT-III is detected when TCM does not receive the proper voltage signal from the sensor.

Possible Cause

INFOID:0000000001703220

- Harness or connector
  (The sensor circuit is open or shorted.)
- Revolution sensor

DTC Confirmation Procedure

INFOID:0000000001703221

CAUTION:
- **Always drive vehicle at a safe speed.**
- **Be careful not to rev engine into the red zone on the tachometer.**
- **If performing this “DTC Confirmation Procedure” again, always turn ignition switch OFF and wait at least 10 seconds before continuing.**

After the repair, perform the following procedure to confirm the malfunction is eliminated.

WITH CONSULT-III

1. Turn ignition switch ON and select “DATA MONITOR” mode for “A/T” with CONSULT-III.
2. Touch “START”.
3. Drive vehicle and check for an increase of “VHCL/S SE-MTR” value.
   If the check result is NG, go to AT-98, "Diagnosis Procedure" .
   If the check result is OK, go to following step.
4. Select “DATA MONITOR” mode for “A/T” with CONSULT-III.
5. Touch “START”.
6. Start engine and maintain the following conditions for at least 5 consecutive seconds.
   VEHICLE SPEED: 30 km/h (19 MPH) or more
   THROTTLE POSI: More than 1.0/8
   SLCT LVR POSI: “D” position
   Driving location: Driving the vehicle uphill (increased engine load) will help maintain the driving conditions required for this test.
   If the check result is NG, go to AT-98, "Diagnosis Procedure" .
   If the check result is OK, go to following step.
7. Maintain the following conditions for at least 5 consecutive seconds.
   ENGINE SPEED: 3,500 rpm or more
   THROTTLE POSI: More than 1.0/8
   SLCT LVR POSI: “D” position
   Driving location: Driving the vehicle uphill (increased engine load) will help maintain the driving conditions required for this test.

WITH GST

Follow the procedure “WITH CONSULT-III”.

WITHOUT CONSULT-III

1. Start engine.

2. Drive vehicle under the following conditions for more than 5 seconds.
   Selector lever position: “D” position
   Vehicle speed: 30 km/h (19 MPH) or more
   Throttle position: greater than 1.0/8 of the full throttle position
3. Perform self-diagnosis. Refer to AT-78, "Diagnosis Procedure without CONSULT-III" .
4. If the check result is NG, go to AT-98, "Diagnosis Procedure" .

Wiring Diagram - AT - VSSA/T

INFOID:0000000001703222

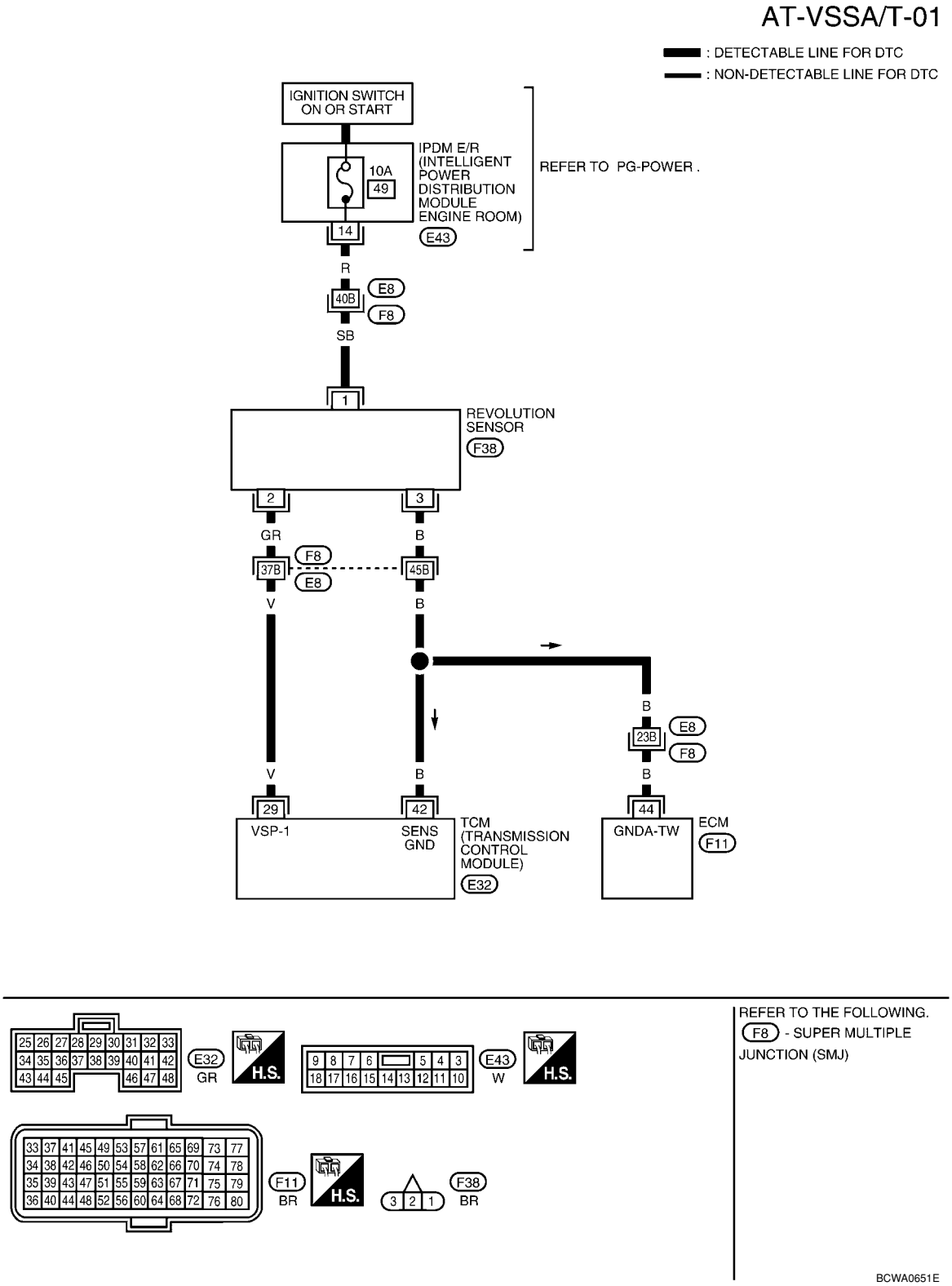

TCM TERMINALS AND REFERENCE VALUES

Refer to AT-71, "TCM Terminal and Reference Value".

Diagnosis Procedure

INFOID:0000000001703223

1. CHECK INPUT SIGNAL

With CONSULT-III

1. Start engine.
2. Select “TCM INPUT SIGNALS” in “DATA MONITOR” mode for “A/T” with CONSULT-III.
3. Read out the value of “VHCL/S SE-A/T” while driving.
   Check the value changes according to driving speed.

OK or NG

OK >> GO TO 8.
NG >> GO TO 2.

2. CHECK REVOLUTION SENSOR

With CONSULT-III

1. Start engine.
2. Check power supply to revolution sensor by voltage between TCM connector terminals. Refer to AT-164, "Wiring Diagram - AT - MAIN" and AT-97, "Wiring Diagram - AT - VSSA/T" .

Item	Connector	Terminal	Judgement standard (Approx.)
TCM	E31, E32	10 - 42	Battery voltage
		19 - 42	

3. If OK, check the pulse when vehicle cruises.

Item	Condition
Revolution sensor	When driving at 20 km/h (12 MPH), use the CONSULT-III pulse frequency measuring function.*1 **CAUTION:** **Connect the diagnosis data link cable to the data link connector.** *1: A circuit tester cannot be used to test this item.

Item	Connector	Terminal	Condition	Judgement standard (Approx.)
TCM	E32	29	When driving at 20 km/h (12 MPH)	150 Hz

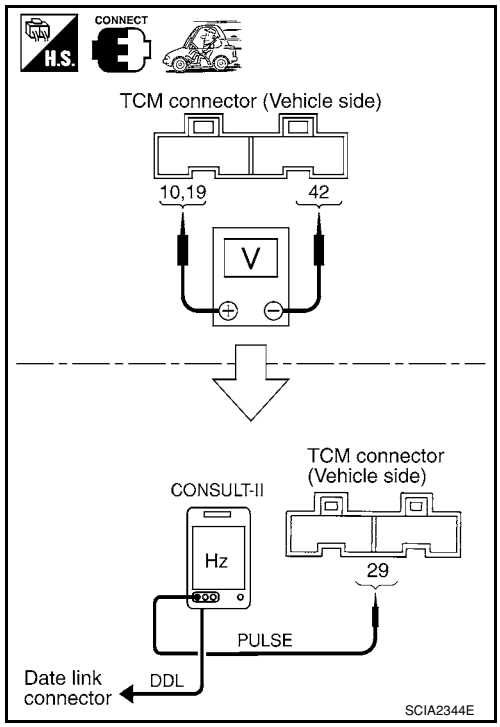

OK or NG

OK >> GO TO 8.
NG >> GO TO 3.

3. CHECK POWER AND SENSOR GROUND

1. Turn ignition switch OFF.
2. Disconnect the revolution sensor harness connector.
3. Turn ignition switch ON. (Do not start engine.)

4. Check voltage between revolution sensor harness connector terminals.

Item	Connector	Terminal	Judgement standard (Approx.)
Revolution sensor	F38	1 - 3	Battery voltage

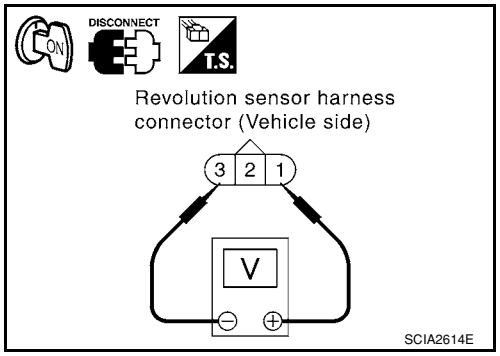

5. Check voltage between revolution sensor harness connector terminal and ground.

Item	Connector	Terminal	Judgement standard (Approx.)
Revolution sensor	F38	1 - ground	Battery voltage

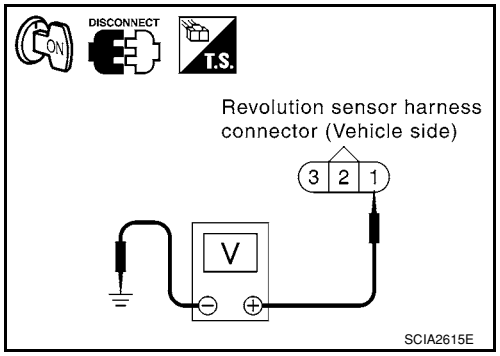

6. If OK, check harness for short to ground and short to power.
7. Reinstall any part removed.

OK or NG

OK >> GO TO 4.
NG - 1 >> Battery voltage is not supplied between terminals 1 and 3, terminals 1 and ground: GO TO 6.
NG - 2 >> Battery voltage is not supplied between terminals 1 and 3 only: GO TO 7.

4. CHECK HARNESS BETWEEN TCM AND REVOLUTION SENSOR

1. Turn ignition switch OFF.
2. Disconnect the TCM connector and revolution sensor harness connector.
3. Check continuity between TCM connector terminal and revolution sensor harness connector terminal.

Item	Connector	Terminal	Continuity
TCM	E32	29	Yes
Revolution sensor	F38	2	

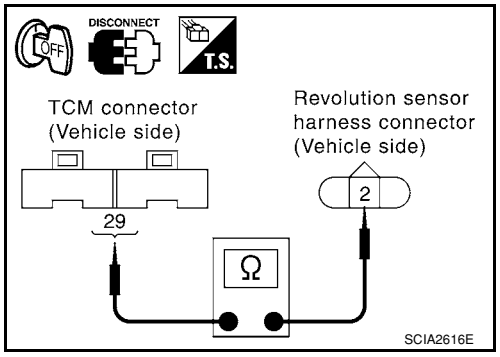

4. If OK, check harness for short to ground and short to power.
5. Reinstall any part removed.

OK or NG

OK >> GO TO 5.
NG >> Repair open circuit or short to ground or short to power in harness or connectors.

5. CHECK TCM

1. Check TCM input/output signal. Refer to AT-71, "TCM Terminal and Reference Value" .
2. If NG, re-check TCM pin terminals for damage or loose connection with harness connector.

OK or NG

OK >> GO TO 8.
NG >> Repair or replace damaged parts.

6. CHECK HARNESS BETWEEN TCM AND REVOLUTION SENSOR (POWER)

1. Turn ignition switch OFF.
2. Disconnect the TCM connector and revolution sensor harness connector.

3. Check continuity between TCM connector terminals and revolution sensor harness connector terminal. Refer to AT-47, "Circuit Diagram" and AT-164, "Wiring Diagram - AT - MAIN" .

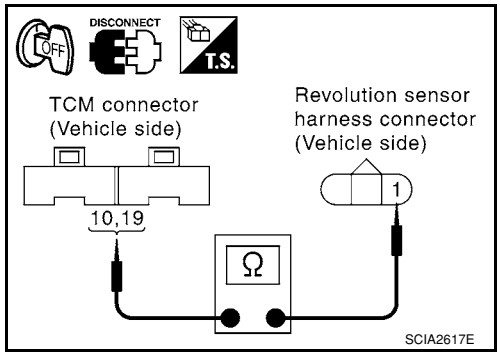

Item	Connector	Terminal	Continuity
TCM	E31	10	Yes
Revolution sensor	F38	1	
TCM	E31	19	Yes
Revolution sensor	F38	1	

4. If OK, check harness for short to ground and short to power.
5. Reinstall any part removed.

OK or NG

OK >> 10A fuse (No.49, located in the IPDM E/R) or ignition switch are malfunctioning.
NG >> Repair open circuit or short to ground or short to power in harness or connectors.

7. CHECK HARNESS BETWEEN TCM AND REVOLUTION SENSOR (SENSOR GROUND)

1. Turn ignition switch OFF.
2. Disconnect the TCM connector and revolution sensor harness connector.
3. Check continuity between TCM connector terminal and revolution sensor harness connector terminal.

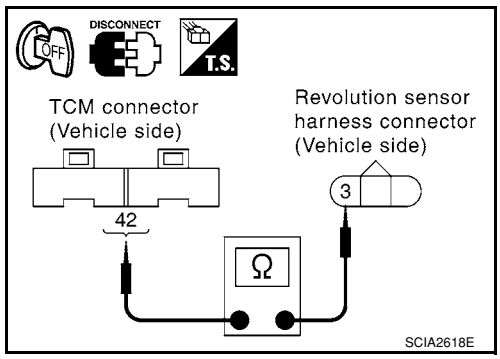

Item	Connector	Terminal	Continuity
TCM	E32	42	Yes
Revolution sensor	F38	3	

4. If OK, check harness for short to ground and short to power.
5. Reinstall any part removed.

OK or NG

OK >> GO TO 5.
NG >> Repair open circuit or short to ground or short to power in harness or connectors.

8. CHECK DTC

Perform AT-96, "DTC Confirmation Procedure" .

OK or NG

OK >> **INSPECTION END**
NG >> GO TO 5.

DTC P0725 ENGINE SPEED SIGNAL

Description

INFOID:0000000001703224

The engine speed signal is sent from the ECM to the TCM.

CONSULT-III Reference Value in Data Monitor Mode

INFOID:0000000001703225

Remarks: Specification data are reference values.

Item name	Condition	Display value
ENGINE SPEED	Engine running	Approximately matches the tachometer reading.

On Board Diagnosis Logic

INFOID:0000000001703226

- This is an OBD-II self-diagnostic item.
- Diagnostic trouble code “P0725 ENGINE SPEED SIG” with CONSULT-III or 9th judgement flicker without CONSULT-III is detected when TCM does not receive the proper voltage signal from ECM.

Possible Cause

INFOID:0000000001703227

Harness or connector
(Circuit is open or shorted.)

DTC Confirmation Procedure

INFOID:0000000001703228

CAUTION:
- **Always drive vehicle at a safe speed.**
- **If performing this “DTC Confirmation Procedure” again, always turn ignition switch OFF and wait at least 10 seconds before continuing.**

After the repair, perform the following procedure to confirm the malfunction is eliminated.

WITH CONSULT-III

1. Turn ignition switch ON and select “DATA MONITOR” mode for “A/T” with CONSULT-III.
2. Touch “START”.
3. Start engine and maintain the following conditions for at least 10 consecutive seconds.
   VEHICLE SPEED: 10 km/h (6 MPH) or more
   THROTTLE POSI: More than 1.0/8
   SLCT LVR POSI: “D” position
4. If the check result is NG, go to AT-103, "Diagnosis Procedure" .

WITH GST

Follow the procedure “WITH CONSULT-III”.

WITHOUT CONSULT-III

1. Start engine.
2. Drive vehicle under the following conditions for more than 10 seconds.
   Selector lever position: “D” position
   Vehicle speed: Higher than 10 km/h (6 MPH)
   Throttle position: Greater than 1.0/8 of the full throttle position
3. Perform self-diagnosis. Refer to AT-78, "Diagnosis Procedure without CONSULT-III" .
4. If the check result is NG, go to AT-103, "Diagnosis Procedure" .

Wiring Diagram - AT - ENGSS

INFOID:0000000001703229

AT-ENGSS-01

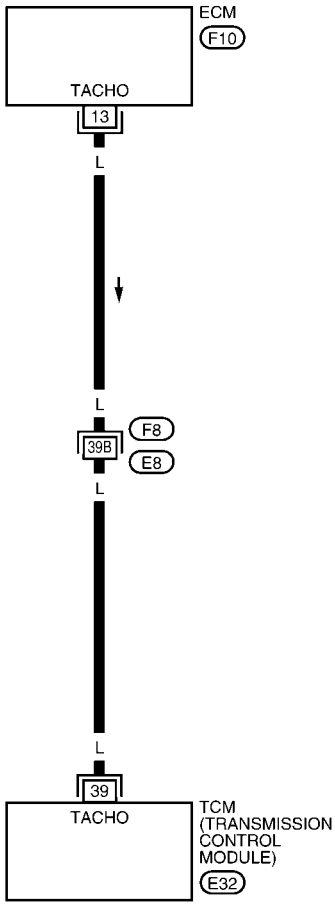

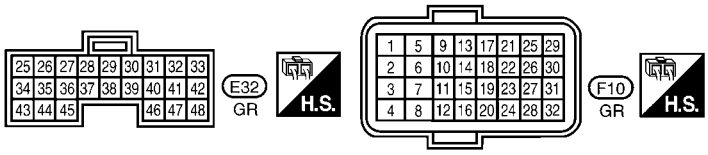

REFER TO THE FOLLOWING.
F8 - SUPER MULTIPLE JUNCTION (SMJ)

BCWA0652E

TCM TERMINALS AND REFERENCE VALUES

Refer to AT-71, "TCM Terminal and Reference Value".

Diagnosis Procedure

INFOID:0000000001703230

1. CHECK DTC WITH ECM

Check DTC with CONSULT-III “ENGINE”.
Turn ignition switch ON and select “SELF-DIAGNOSTIC RESULTS” mode for “ENGINE” with CONSULT-III. Refer to EC-109, "CONSULT-II Function (ENGINE)" .

OK or NG

OK >> GO TO 2.
NG >> Check ignition signal circuit for engine control. Refer to EC-531 .

2. CHECK INPUT SIGNAL

With CONSULT-III

1. Start engine.
2. Select “TCM INPUT SIGNALS” in “DATA MONITOR” mode for “A/T” with CONSULT-III.
3. Read out the value of “ENGINE SPEED”. Check engine speed changes according to throttle position.

Item name	Condition	Display value
ENGINE SPEED	Engine running	Approximately matches the tachometer reading.

Without CONSULT-III

1. Start engine.
2. Check voltage between TCM harness connector terminal and ground.

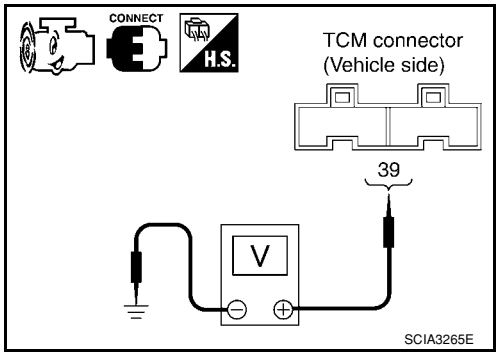

item	Connector	Terminal	Condition	Judgement standard (Approx.)
Engine speed signal	E32	39 - Ground	ON and	Refer to EC-102 .

OK or NG

OK >> GO TO 4.
NG >> GO TO 3.

3. CHECK HARNESS BETWEEN TCM AND ECM

1. Turn ignition switch OFF.
2. Disconnect ECM connector and TCM connector.
3. Check continuity between ECM connector and TCM connector.

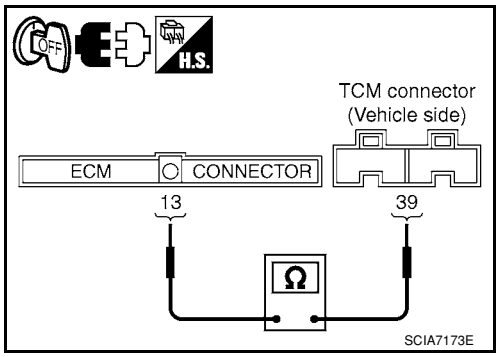

Item	Connector	Terminal	Continuity
TCM	E32	39	Yes
ECM	F10	13	

4. If OK, check harness for short to ground and short to power.
5. If OK, check continuity between body ground and transaxle assembly.
6. Reinstall any part removed.

OK or NG

OK >> GO TO 4.
NG >> Repair open circuit or short to ground or short to power in harness or connectors.

4. CHECK DTC

Perform AT-101, "DTC Confirmation Procedure" .

OK or NG

OK >> **INSPECTION END**
NG >> GO TO 5.

5. CHECK TCM

1. Check TCM input/output signal. Refer to AT-71, "TCM Terminal and Reference Value" .
2. If NG, recheck TCM pin terminals for damage or loose connection with harness connector.

OK or NG

OK >> **INSPECTION END**
NG >> Repair or replace damaged parts.

DTC P0731 A/T 1ST GEAR FUNCTION

Description

INFOID:0000000001703231

- This malfunction will not be detected while the OD OFF indicator lamp is indicating another self-diagnosis malfunction.
- This malfunction is detected when the A/T does not shift into first gear position as instructed by the TCM. This is not caused by electrical malfunction (circuits open or shorted) but by mechanical malfunction such as control valve sticking, improper solenoid valve operation, etc.

Gear position	1	2	3	4
Shift solenoid valve A	ON (Closed)	OFF (Open)	OFF (Open)	ON (Closed)
Shift solenoid valve B	ON (Closed)	ON (Closed)	OFF (Open)	OFF (Open)

On Board Diagnosis Logic

INFOID:0000000001703232

- This is an OBD-II self-diagnostic item.
- Diagnostic trouble code “P0731 A/T 1ST GR FNCTN” with CONSULT-III is detected when A/T cannot be shifted to the 1st gear position even if electrical circuit is good.
- This diagnosis monitors actual gear position by checking the torque converter slip ratio calculated by TCM as follows:
  Torque converter slip ratio = A x C/B
  A: Output shaft revolution signal from revolution sensor
  B: Engine speed signal from ECM
  C: Gear ratio determined as gear position which TCM supposes
  If the actual gear position is higher than the position (1st) supposed by TCM, the slip ratio will be more than normal. In case the ratio exceeds the specified value, TCM judges this diagnosis malfunction.
  This malfunction will be caused when either shift solenoid valve A is stuck open or shift solenoid valve B is stuck open.
- Gear positions supposed by TCM are as follows:
  In case of gear position with no malfunctions: **1**, 2, 3 and 4 positions
  In case of gear position with shift solenoid valve A stuck open: **2***, 2, 3 and 3 positions
  In case of gear position with shift solenoid valve B stuck open: **4***, 3, 3 and 4 positions to each gear position above
  *: “P0731 A/T 1ST GR FNCTN” is detected.

Possible Cause

INFOID:0000000001703233

- Shift solenoid valve A
- Shift solenoid valve B
- Each clutch
- Hydraulic control circuit

DTC Confirmation Procedure

INFOID:0000000001703234

CAUTION:
- **Always drive vehicle at a safe speed.**
- **If performing this “DTC Confirmation Procedure” again, always turn ignition switch OFF and wait at least 10 seconds before continuing.**

After the repair, perform the following procedure to confirm the malfunction is eliminated.

WITH CONSULT-III

1. Start engine and select “DATA MONITOR” mode for “A/T” with CONSULT-III.
2. Touch “START”.
3. Make sure that output voltage of A/T fluid temperature sensor is within the range below.
   FLUID TEMP SE: 0.4 - 1.5 V
   If out of range, drive the vehicle to decrease the voltage (warm up the fluid) or stop engine to increase the voltage (cool down the fluid).
4. Select “1ST GR FNCTN P0731” of “DTC WORK SUPPORT” mode for “A/T” with CONSULT-III and touch “START”.

5. Accelerate vehicle to 20 to 25 km/h (12 to 16 MPH) under the following conditions and release the accelerator pedal completely.
   THROTTLE POSI: Less than 1.0/8 (at all times during step 4)
   SLCT LVR POSI: "D" position
- **Make sure that "GEAR" shows "2" after releasing pedal.**
6. Depress accelerator pedal to WOT (more than 7.0/8 of "THROTTLE POSI") quickly from a speed of 20 to 25 km/h (12 to 16 MPH) until "TESTING" changes to "STOP VEHICLE" or "COMPLETED". (It will take approximately 3 seconds.)
   If the check result NG appears on CONSULT-III screen, go to AT-106, "Diagnosis Procedure".
   If "STOP VEHICLE" appears on CONSULT-III screen, go to the following step.
- **Make sure that "GEAR" shows "1" when depressing accelerator pedal to WOT.**
- **If "TESTING" does not appear on CONSULT-III for a long time, select "SELF-DIAG RESULTS" for "A/T". In case a DTC other than "P0731 A/T 1ST GR FNCTN" is shown, refer to AT-73, "CONSULT-III Function (A/T)".**
7. Stop vehicle.
8. Follow the instruction displayed. (Check for normal shifting referring to the table below.)

Vehicle condition	Gear on actual transmission shift pattern when screen is changed to 1 → 2 → 3 → 4
No malfunction exists.	1 → 2 → 3 → 4
Malfunction for "A/T 1ST GR FNCTN " exists.	2 → 2 → 3 → 3
	4 → 3 → 3 → 4

9. Make sure that "OK" is displayed. (If "NG" is displayed, refer to "Diagnostic Procedure".)
   Refer to AT-106, "Diagnosis Procedure".
   Refer to AT-61, "Vehicle Speed at Which Gear Shifting Occurs".

WITH GST

Follow the procedure "WITH CONSULT-III".

Diagnosis Procedure

INFOID:0000000001703235

1. CHECK VALVE RESISTANCE

1. Remove control valve assembly. Refer to AT-216, "Control Valve Assembly and Accumulators".
- Shift solenoid valve A
- Shift solenoid valve B
2. Check resistance between terminal cord assembly harness connector terminals and ground. Refer to AT-135, "Wiring Diagram - AT - SSV/A" and AT-140, "Wiring Diagram - AT - SSV/B".

Solenoid valve	Connector	Terminal	Resistance (Approx.)
Shift solenoid valve A	F30	2 - Ground	20 - 30 Ω
Shift solenoid valve B		1 - Ground	5 - 20 Ω

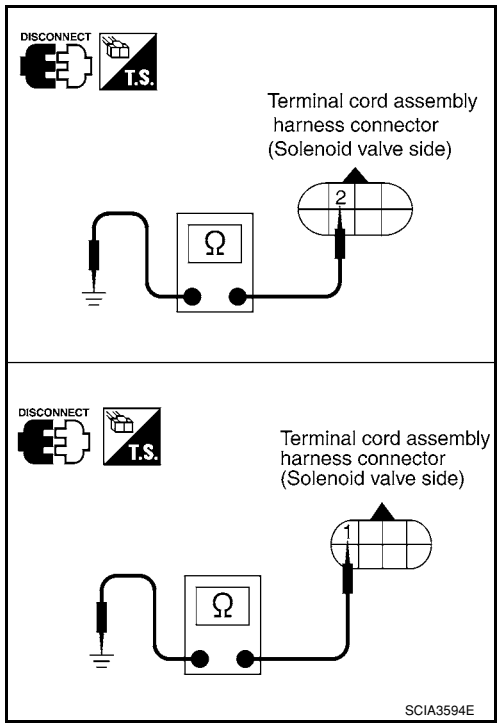

OK or NG

OK >> GO TO 2.
NG >> Repair or replace damaged parts.

2. CHECK VALVE OPERATION

1. Remove control valve assembly. Refer to AT-216, "Control Valve Assembly and Accumulators".
- Shift solenoid valve A
- Shift solenoid valve B
2. Check solenoid valve by listening for its operating sound while applying battery voltage to the terminals and ground. Refer to AT-135, "Wiring Diagram - AT - SSV/A" and AT-140, "Wiring Diagram - AT - SSV/B".

OK or NG

OK >> GO TO 3.
NG >> Repair or replace shift solenoid valve assembly.

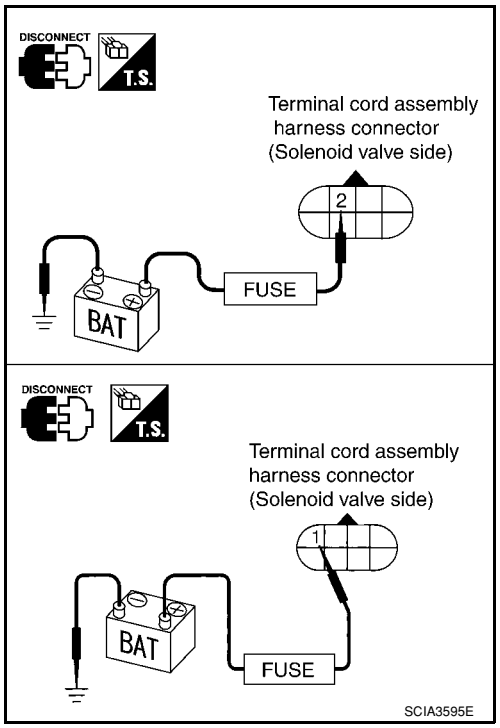

3. CHECK CONTROL VALVE

1. Disassemble control valve assembly. Refer to AT-263, "Control Valve Assembly".
2. Check to ensure that:
- Valve, sleeve and plug slide along valve bore under their own weight.
- Valve, sleeve and plug are free from burrs, dents and scratches.
- Control valve springs are free from damage, deformation and fatigue.
- Hydraulic line is free from obstacles.

OK or NG

OK >> GO TO 4.
NG >> Repair control valve assembly.

4. CHECK DTC

Perform AT-105, "DTC Confirmation Procedure".

OK or NG

OK >> **INSPECTION END**
NG >> Check control valve again. If NG, repair or replace control valve assembly.

DTC P0732 A/T 2ND GEAR FUNCTION

Description

INFOID:0000000001703236

- This malfunction will not be detected while the OD OFF indicator lamp is indicating another self-diagnosis malfunction.
- This malfunction is detected when the A/T does not shift into second gear position as instructed by the TCM. This is not caused by electrical malfunction (circuits open or shorted) but by mechanical malfunction such as control valve sticking, improper solenoid valve operation, etc.

Gear position	1	2	3	4
Shift solenoid valve A	ON (Closed)	OFF (Open)	OFF (Open)	ON (Closed)
Shift solenoid valve B	ON (Closed)	ON (Closed)	OFF (Open)	OFF (Open)

On Board Diagnosis Logic

INFOID:0000000001703237

- This is an OBD-II self-diagnostic item.
- Diagnostic trouble code “P0732 A/T 2ND GR FNCTN” with CONSULT-III is detected when A/T cannot be shifted to the 2nd gear position even if electrical circuit is good.
- This diagnosis monitors actual gear position by checking the torque converter slip ratio calculated by TCM as follows:
  Torque converter slip ratio = A x C/B
  A: Output shaft revolution signal from revolution sensor
  B: Engine speed signal from ECM
  C: Gear ratio determined as gear position which TCM supposes
  If the actual gear position is higher than the position (2nd) supposed by TCM, the slip ratio will be more than normal. In case the ratio exceeds the specified value, TCM judges this diagnosis malfunction.
  This malfunction will be caused when shift solenoid valve B is stuck open.
- Gear positions supposed by TCM are as follows:
  In case of gear position with no malfunctions: 1, **2**, 3 and 4 positions
  In case of gear position with shift solenoid valve B stuck open: 4, **3***, 3 and 4 positions to each gear position above
  *: “P0732 A/T 2ND GR FNCTN” is detected.

Possible Cause

INFOID:0000000001703238

- Shift solenoid valve B
- Each clutch
- Hydraulic control circuit

DTC Confirmation Procedure

INFOID:0000000001703239

CAUTION:
- **Always drive vehicle at a safe speed.**
- **If performing this “DTC Confirmation Procedure” again, always turn ignition switch OFF and wait at least 10 seconds before continuing.**

After the repair, perform the following procedure to confirm the malfunction is eliminated.

WITH CONSULT-III

1. Start engine and select “DATA MONITOR” mode for “A/T” with CONSULT-III.
2. Touch “START”.
3. Make sure that output voltage of A/T fluid temperature sensor is within the range below.
   FLUID TEMP SE: 0.4 - 1.5 V
   If out of range, drive the vehicle to decrease the voltage (warm up the fluid) or stop engine to increase the voltage (cool down the fluid).
4. Select “2ND GR FNCTN P0732” of “DTC WORK SUPPORT” mode for “A/T” with CONSULT-III and touch “START”.
5. Accelerate vehicle to 45 to 50 km/h (28 to 31 MPH) under the following conditions and release the accelerator pedal completely.
   THROTTLE POSI: Less than 1.0/8
   SLCT LVR POSI: “D” position

- **Make sure that "GEAR" shows "3" or "4" after releasing pedal.**

6. Depress accelerator pedal to WOT (more than 7.0/8 of "THROTTLE POSI") quickly from a speed of 45 to 50 km/h (28 to 31 MPH) until "TESTING" changes to "STOP VEHICLE" or "COMPLETE". (It will take approximately 3 seconds.)
   If the check result NG appears on CONSULT-III screen, go to AT-109, "Diagnosis Procedure".
   If "STOP VEHICLE" appears on CONSULT-III screen, go to following step.

- **Make sure that "GEAR" shows "2" when depressing accelerator pedal to WOT.**
- **If "TESTING" does not appear on CONSULT-III for a long time, select "SELF-DIAG RESULTS" for "A/T". In case a DTC other than "P0732 A/T 2ND GR FNCTN" is shown, refer to AT-73, "CONSULT-III Function (A/T)".**

7. Stop vehicle.
8. Follow the instruction displayed. (Check for normal shifting referring to the table below.)

Vehicle condition	Gear on actual transmission shift pattern when screen is changed to 1 → 2 → 3 → 4
No malfunction exists	1 → 2 → 3 → 4
Malfunction for "A/T 2ND GR FNCTN" exists.	4 → 3 → 3 → 4

9. Make sure that "OK" is displayed. (If "NG" is displayed, refer to "Diagnostic Procedure".)
   Refer to AT-109, "Diagnosis Procedure".
   Refer to AT-61, "Vehicle Speed at Which Gear Shifting Occurs".

WITH GST

Follow the procedure "WITH CONSULT-III".

Diagnosis Procedure

INFOID:0000000001703240

1. CHECK VALVE RESISTANCE

1. Remove control valve assembly. Refer to AT-216, "Control Valve Assembly and Accumulators".
- Shift solenoid valve B
2. Check resistance between terminal cord assembly harness connector terminal and ground. Refer to AT-140, "Wiring Diagram - AT - SSV/B".

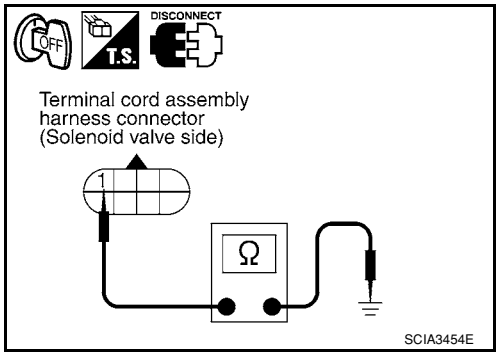

Solenoid valve	Connector	Terminal	Resistance (Approx.)
Shift solenoid valve B	F30	1 - Ground	5 - 20 Ω

OK or NG

OK >> GO TO 2.
NG >> Repair or replace shift solenoid valve assembly.

2. CHECK VALVE OPERATION

1. Remove control valve assembly. Refer to AT-216, "Control Valve Assembly and Accumulators".
- Shift solenoid valve B
2. Check solenoid valve by listening for its operating sound while applying battery voltage to the terminal and ground. Refer to AT-140, "Wiring Diagram - AT - SSV/B".

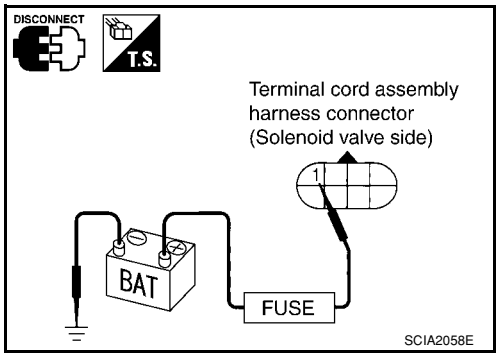

OK or NG

OK >> GO TO 3.
NG >> Repair or replace shift solenoid valve assembly.

3. CHECK CONTROL VALVE

1. Disassemble control valve assembly. Refer to AT-263, "Control Valve Assembly".
2. Check to ensure that:
- Valve, sleeve and plug slide along valve bore under their own weight.

- Valve, sleeve and plug are free from burrs, dents and scratches.
- Control valve springs are free from damage, deformation and fatigue.
- Hydraulic line is free from obstacles.

OK or NG

OK >> GO TO 4.
NG >> Repair control valve assembly.

4. CHECK DTC

Perform AT-108, "DTC Confirmation Procedure".

OK or NG

OK >> **INSPECTION END**
NG >> Check control valve again. If NG, repair or replace control valve assembly.

DTC P0733 A/T 3RD GEAR FUNCTION

Description

INFOID:0000000001703241

- This malfunction will not be detected while the OD OFF indicator lamp is indicating another self-diagnosis malfunction.
- This malfunction is detected when the A/T does not shift into third gear position as instructed by the TCM. This is not caused by electrical malfunction (circuits open or shorted) but by mechanical malfunction such as control valve sticking, improper solenoid valve operation, malfunctioning servo piston or brake band, etc.

Gear position	1	2	3	4
Shift solenoid valve A	ON (Closed)	OFF (Open)	OFF (Open)	ON (Closed)
Shift solenoid valve B	ON (Closed)	ON (Closed)	OFF (Open)	OFF (Open)

On Board Diagnosis Logic

INFOID:0000000001703242

- This is an OBD-II self-diagnostic item.
- Diagnostic trouble code “P0733 A/T 3RD GR FNCTN” with CONSULT-III is detected when A/T cannot be shifted to the 3rd gear position even if electrical circuit is good.
- This diagnosis monitors actual gear position by checking the torque converter slip ratio calculated by TCM as follows:
  Torque converter slip ratio = A x C/B
  A: Output shaft revolution signal from revolution sensor
  B: Engine speed signal from ECM
  C: Gear ratio determined as gear position which TCM supposes
  If the actual gear position is higher than the position (3rd) supposed by TCM, the slip ratio will be more than normal. In case the ratio exceeds the specified value, TCM judges this diagnosis malfunction.
  This malfunction will be caused when shift solenoid valve A is stuck closed.
- Gear positions supposed by TCM are as follows.
  In case of gear position with no malfunctions: 1, 2, **3** and 4 positions
  In case of gear position with shift solenoid valve A stuck closed: 1, 1, **4*** and 4 positions to each gear position above
  *: “P0733 A/T 3RD GR FNCTN” is detected.

Possible Cause

INFOID:0000000001703243

- Shift solenoid valve A
- Each clutch
- Hydraulic control circuit

DTC Confirmation Procedure

INFOID:0000000001703244

CAUTION:
- **Always drive vehicle at a safe speed.**
- **If performing this “DTC Confirmation Procedure” again, always turn ignition switch OFF and wait at least 10 seconds before continuing.**

After the repair, perform the following procedure to confirm the malfunction is eliminated.

WITH CONSULT-III

1. Start engine and select “DATA MONITOR” mode for “A/T” with CONSULT-III.
2. Touch “START”.
3. Make sure that output voltage of A/T fluid temperature sensor is within the range below.
   FLUID TEMP SE: 0.4 - 1.5 V
   If out of range, drive the vehicle to decrease the voltage (warm up the fluid) or stop engine to increase the voltage (cool down the fluid).
4. Select “3RD GR FNCTN P0733” of “DTC WORK SUPPORT” mode for “A/T” with CONSULT-III and touch “START”.
5. Accelerate vehicle to 60 to 75 km/h (37 to 47 MPH) under the following conditions and release the accelerator pedal completely.
   THROTTLE POSI: Less than 1.0/8 (at all times during step 4)
   SLCT LVR POSI: “D” position

- **Make sure that "GEAR" shows "4" after releasing pedal.**

6. Depress accelerator pedal steadily with 3.5/8 - 4.5/8 of "THROTTLE POSI" from a speed of 60 to 75 km/h (37 to 47 MPH) until "TESTING" changes to "STOP VEHICLE" or "COMPLETED". (It will take approximately 3 seconds.)
   If the check result NG appears on CONSULT-III screen, go to AT-112, "Diagnosis Procedure".
   If "STOP VEHICLE" appears on CONSULT-III screen, go to following step.

- **Make sure that "GEAR" shows "3" when depressing accelerator pedal with 3.5/8 - 4.5/8 of "THROTTLE POSI".**
- **If "TESTING" does not appear on CONSULT-III for a long time, select "SELF-DIAG RESULTS" for "A/T". In case a DTC other than "P0733 A/T 3RD GR FNCTN" is shown, refer to AT-73, "CONSULT-III Function (A/T)".**

7. Stop vehicle.
8. Follow the instruction displayed. (Check for normal shifting referring to the table below.)

Vehicle condition	Gear on actual transmission shift pattern when screen is changed to 1 → 2 → 3 → 4
No malfunction exists.	1 → 2 → 3 → 4
Malfunction for "A/T 3RD GR FNCTN" exists.	1 → 1 → 4 → 4

9. Make sure that "OK" is displayed. (If "NG" is displayed, refer to "Diagnostic Procedure".)
   Refer to AT-112, "Diagnosis Procedure".
   Refer to AT-61, "Vehicle Speed at Which Gear Shifting Occurs".

WITH GST

Follow the procedure "WITH CONSULT-III".

Diagnosis Procedure

INFOID:0000000001703245

1. CHECK VALVE RESISTANCE

1. Remove control valve assembly. Refer to AT-216, "Control Valve Assembly and Accumulators".
- Shift solenoid valve A
- Shift solenoid valve B

2. Check resistance between terminal cord assembly harness connector terminals and ground. Refer to AT-135, "Wiring Diagram - AT - SSV/A" and AT-140, "Wiring Diagram - AT - SSV/B".

Solenoid valve	Connector	Terminal	Resistance (Approx.)
Shift solenoid valve A	F30	2 - Ground	20 - 30 Ω
Shift solenoid valve B		1 - Ground	5 - 20 Ω

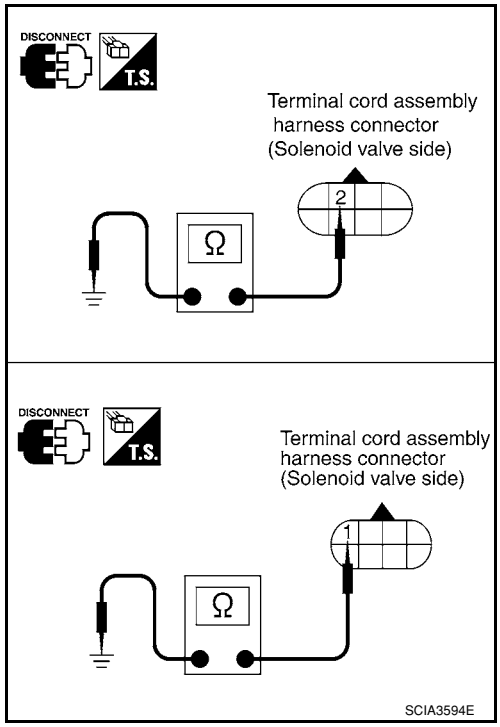

OK or NG

OK >> GO TO 2.
NG >> Repair or replace shift solenoid valve assembly.

2. CHECK VALVE OPERATION

1. Remove control valve assembly. Refer to AT-216, "Control Valve Assembly and Accumulators".
- Shift solenoid valve A
- Shift solenoid valve B

2. Check solenoid valve by listening for its operating sound while applying battery voltage to the terminals and ground. Refer to AT-135, "Wiring Diagram - AT - SSV/A" and AT-140, "Wiring Diagram - AT - SSV/B".

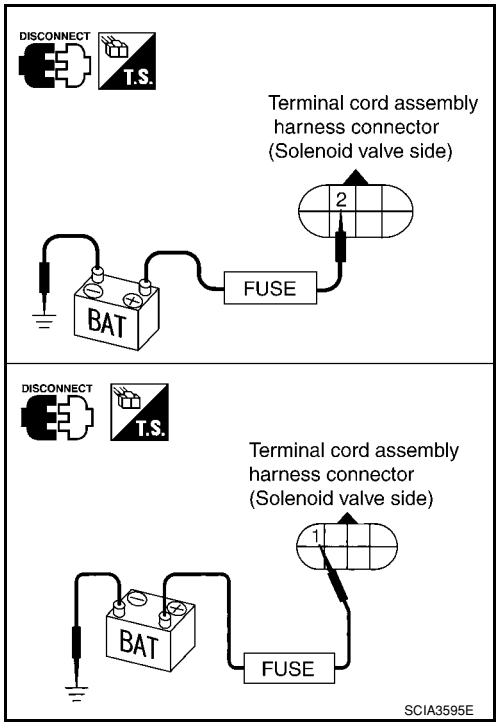

OK or NG

OK >> GO TO 3.
NG >> Repair or replace shift solenoid valve assembly.

3. CHECK CONTROL VALVE

1. Disassemble control valve assembly. Refer to AT-263, "Control Valve Assembly".
2. Check to ensure that:
- Valve, sleeve and plug slide along valve bore under their own weight.
- Valve, sleeve and plug are free from burrs, dents and scratches.
- Control valve springs are free from damage, deformation and fatigue.
- Hydraulic line is free from obstacles.

OK or NG

OK >> GO TO 4.
NG >> Repair control valve assembly.

4. CHECK DTC

Perform AT-111, "DTC Confirmation Procedure".

OK or NG

OK >> **INSPECTION END**
NG >> Check control valve again. If NG, repair or replace control valve assembly.

DTC P0734 A/T 4TH GEAR FUNCTION

Description

INFOID:0000000001703246

- This malfunction will not be detected while the OD OFF indicator lamp is indicating another self-diagnosis malfunction.
- This malfunction is detected when the A/T does not shift into fourth gear position or the torque converter clutch does not lock up as instructed by the TCM. This is not caused by electrical malfunction (circuits open or shorted) but by mechanical malfunction such as control valve sticking, improper solenoid valve operation, malfunctioning oil pump or torque converter clutch, etc.

Gear position	1	2	3	4
Shift solenoid valve A	ON (Closed)	OFF (Open)	OFF (Open)	ON (Closed)
Shift solenoid valve B	ON (Closed)	ON (Closed)	OFF (Open)	OFF (Open)

CONSULT-III Reference Value in Data Monitor Mode

INFOID:0000000001703247

Remarks: Specification data are reference values.

Item name	Condition	Display value (Approx.)
LINE PRES DTY	Small throttle opening (Low line pressure) ⇔ Large throttle opening (High line pressure)	0% ⇔ 94%

On Board Diagnosis Logic

INFOID:0000000001703248

- This is an OBD-II self-diagnostic item.
- Diagnostic trouble code “P0734 A/T 4TH GR FNCTN” with CONSULT-III is detected when A/T cannot be shifted to the 4th gear position even if electrical circuit is good.
- This diagnosis monitors actual gear position by checking the torque converter slip ratio calculated by TCM as follows:
  Torque converter slip ratio = A x C/B
  A: Output shaft revolution signal from revolution sensor
  B: Engine speed signal from ECM
  C: Gear ratio determined as gear position which TCM supposes
  If the actual gear position is much lower than the position (4th) supposed by TCM, the slip ratio will be much less than normal. In case the ratio does not reach the specified value, TCM judges this diagnosis malfunction.
  This malfunction will be caused when shift solenoid valve A is stuck open or shift solenoid valve B is stuck closed.
- Gear positions supposed by TCM are as follows.
  In case of gear position with no malfunctions: 1, 2, 3 and **4** positions
  In case of gear position with shift solenoid valve A stuck open: 2, 2, 3 and **3*** positions
  In case of gear position with shift solenoid valve B stuck closed: 1, 2, 2 and **1*** positions to each gear position above
  *: “P0734 A/T 4TH GR FNCTN” is detected.

Possible Cause

INFOID:0000000001703249

- Shift solenoid valve A
- Shift solenoid valve B
- Line pressure solenoid valve
- Each clutch
- Hydraulic control circuit

DTC Confirmation Procedure

INFOID:0000000001703250

CAUTION:
- **Always drive vehicle at a safe speed.**
- **If performing this “DTC Confirmation Procedure” again, always turn ignition switch OFF and wait at least 10 seconds before continuing.**

After the repair, perform the following procedure to confirm the malfunction is eliminated.

WITH CONSULT-III

1. Start engine and select “DATA MONITOR” mode for “A/T” with CONSULT-III.
2. Touch “START”.
3. Make sure that output voltage of A/T fluid temperature sensor is within the range below.
   FLUID TEMP SE: 0.4 - 1.5 V
   If out of range, drive the vehicle to decrease the voltage (warm up the fluid) or stop engine to increase the voltage (cool down the fluid).
4. Select “4TH GR FNCTN P0734” of “DTC WORK SUPPORT” mode for “A/T” with CONSULT-III and touch “START”.
5. Accelerate vehicle to 55 to 65 km/h (34 to 40 MPH) under the following conditions and release the accelerator pedal completely.
   THROTTLE POSI: Less than 5.5/8 (at all times during step 4)
   SLCT LVR POSI: “D” position
- **Make sure that “GEAR” shows “3” after releasing pedal.**
6. Depress accelerator pedal steadily with 1.0/8 - 2.0/8 of “THROTTLE POSI” from a speed of 55 to 65 km/h (34 to 40 MPH) until “TESTING” has turned to “STOP VEHICLE” or “COMPLETED”. (It will take approximately 3 seconds.)
   If the check result NG appears on CONSULT-III screen, go to AT-115, "Diagnosis Procedure".
   If “STOP VEHICLE” appears on CONSULT-III screen, go to following step.
- **Make sure that “GEAR” shows “4” when depressing accelerator pedal with 1.0/8 - 2.0/8 of “THROTTLE POSI”.**
- **If “TESTING” does not appear on CONSULT-III for a long time, select “SELF-DIAG RESULTS” for “A/T”. In case a DTC other than “P0734 A/T 4TH GR FNCTN” is shown, refer to AT-73, "CONSULT-III Function (A/T)".**
7. Stop vehicle.
8. Follow the instruction displayed. (Check for normal shifting referring to the table below.)

Vehicle condition	Gear on actual transmission shift pattern when screen is changed to 1 → 2 → 3 → 4
No malfunction exists	1 → 2 → 3 → 4
Malfunction for “A/T 4TH GR FNCTN” exists.	2 → 2 → 3 → 3
	1 → 2 → 2 → 1

9. Make sure that “OK” is displayed. (If “NG” is displayed, refer to “Diagnostic Procedure”.)
   Refer to AT-115, "Diagnosis Procedure".
   Refer to AT-61, "Vehicle Speed at Which Gear Shifting Occurs".

WITH GST

Follow the procedure “WITH CONSULT-III”.

Diagnosis Procedure

INFOID:0000000001703251

1. CHECK SHIFT-UP (D3 TO D4)

During AT-55, "Cruise Test - Part 1".

Does A/T shift from D3 to D4 at the specified speed?

YES >> GO TO 11.
NO >> GO TO 2.

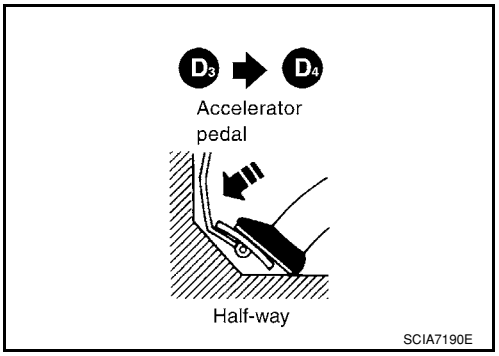

2. CHECK LINE PRESSURE

Perform line pressure test. Refer to AT-48, "Inspections Before Trouble Diagnosis".

OK or NG

OK >> GO TO 3.
NG >> GO TO 7.

3. CHECK VALVE RESISTANCE

1. Remove control valve assembly. Refer to AT-216, "Control Valve Assembly and Accumulators".
- Shift solenoid valve A
- Shift solenoid valve B
2. Check resistance between terminal cord assembly harness connector terminals and ground. Refer to AT-135, "Wiring Diagram - AT - SSV/A" and AT-140, "Wiring Diagram - AT - SSV/B".

Solenoid valve	Connector	Terminal	Resistance (Approx.)
Shift solenoid valve A	F30	2 - Ground	20 - 30 Ω
Shift solenoid valve B		1 - Ground	5 - 20 Ω

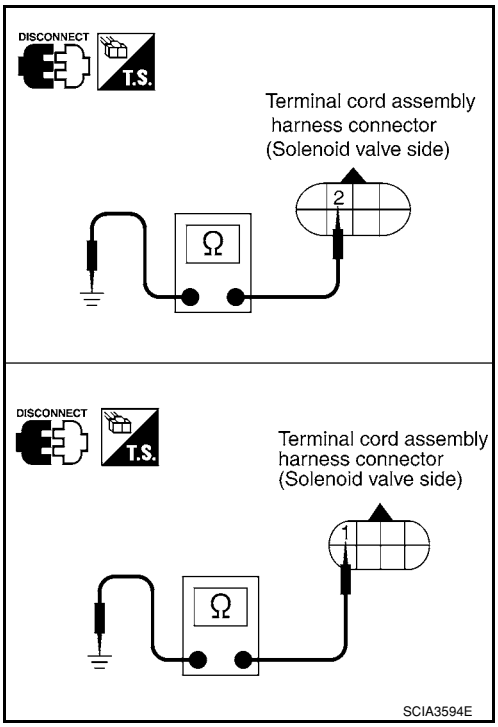

OK or NG

OK >> GO TO 4.
NG >> Replace solenoid valve assembly.

4. CHECK VALVE OPERATION

1. Remove control valve assembly. Refer to AT-216, "Control Valve Assembly and Accumulators".
- Shift solenoid valve A
- Shift solenoid valve B
2. Check solenoid valve by listening for its operating sound while applying battery voltage to the terminals and ground. Refer to AT-135, "Wiring Diagram - AT - SSV/A" and AT-140, "Wiring Diagram - AT - SSV/B".

OK or NG

OK >> GO TO 5.
NG >> Replace solenoid valve assembly.

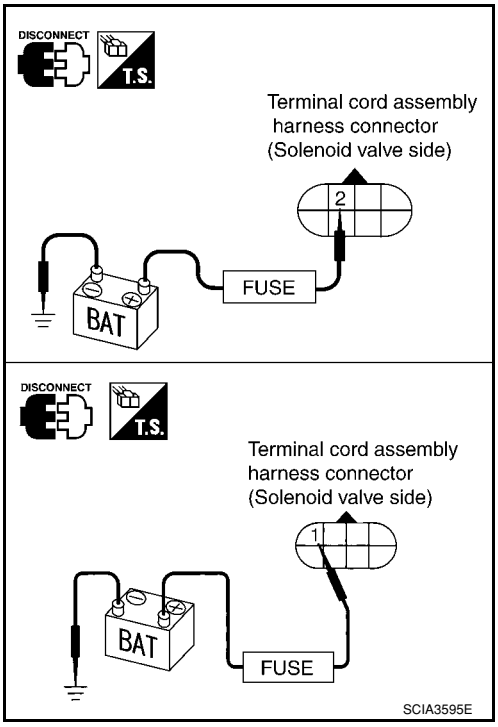

5. CHECK CONTROL VALVE

1. Disassemble control valve assembly. Refer to AT-263, "Control Valve Assembly".
2. Check to ensure that:

- Valve, sleeve and plug slide along valve bore under their own weight.
- Valve, sleeve and plug are free from burrs, dents and scratches.
- Control valve springs are free from damage, deformation and fatigue.
- Hydraulic line is free from obstacles.

OK or NG

OK >> GO TO 6.
NG >> Repair control valve.

6. CHECK SHIFT-UP (D3 TO D4)

During AT-55, "Cruise Test - Part 1".

Does A/T shift from D3 to D4 at the specified speed?

YES >> GO TO 11.
NO >> Check control valve again. Repair or replace control valve assembly.

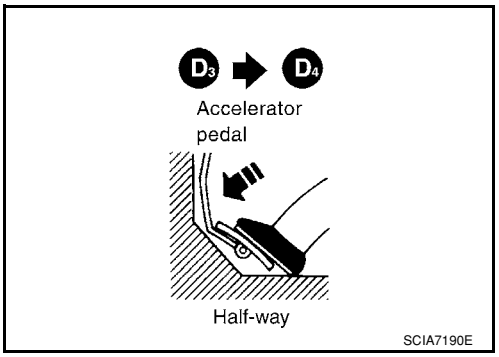

7. CHECK VALVE RESISTANCE

1. Remove control valve assembly. Refer to AT-216, "Control Valve Assembly and Accumulators".
- Line pressure solenoid valves
2. Check resistance between terminal cord assembly harness connector terminal and ground. Refer to AT-130, "Wiring Diagram - AT - LPSV".

Solenoid valve	Connector	Terminal	Resistance (Approx.)
Line pressure solenoid valve	F30	4 - Ground	2.5 - 5 Ω

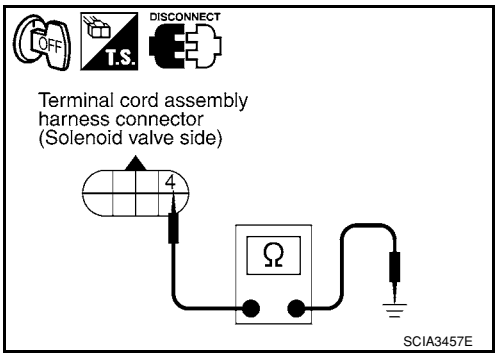

OK or NG

OK >> GO TO 8.
NG >> Replace solenoid valve assembly.

8. CHECK VALVE OPERATION

1. Remove control valve assembly. Refer to AT-216, "Control Valve Assembly and Accumulators".
- Line pressure solenoid valves
2. Check solenoid valve by listening for its operating sound while applying battery voltage to the terminal and ground. Refer to AT-130, "Wiring Diagram - AT - LPSV".

OK or NG

OK >> GO TO 9.
NG >> Replace solenoid valve assembly.

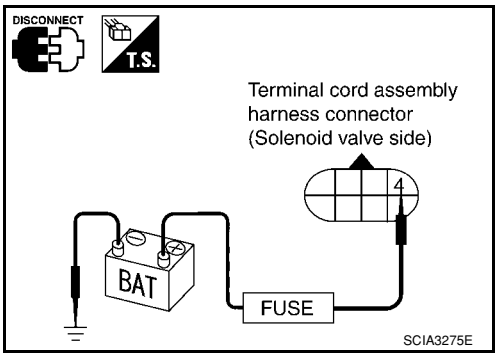

9. CHECK CONTROL VALVE

1. Disassemble control valve assembly. Refer to AT-263, "Control Valve Assembly".
2. Check line pressure circuit valves for sticking.
- Pilot valve
- Shift solenoid valve A
- Shift solenoid valve B

OK or NG

OK >> GO TO 10.

NG >> Repair control valve.

10. CHECK SHIFT-UP (D_3 TO D_4)

During AT-55, "Cruise Test - Part 1".

Does A/T shift from D_3 to D_4 at the specified speed?

YES >> GO TO 11.
NO >> Check control valve again. Repair or replace control valve assembly.

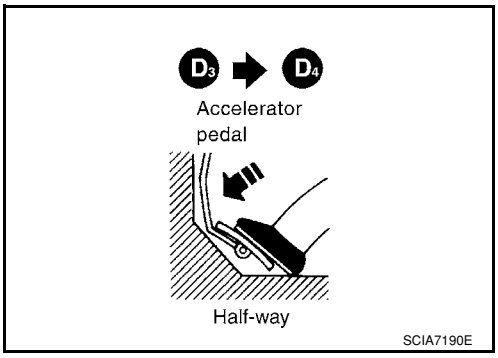

11. CHECK DTC

Perform AT-114, "DTC Confirmation Procedure".

OK or NG

OK >> **INSPECTION END**
NG >> Perform AT-55, "Cruise Test - Part 1" again and return to the start point of this test group.

DTC P0740 TORQUE CONVERTER CLUTCH SOLENOID VALVE

Description

INFOID:0000000001703252

- The torque converter clutch solenoid valve is activated, with the gear in D4 and D3, by the TCM in response to signals sent from the vehicle speed sensor and the ECM (throttle opening). Lock-up piston operation will then be controlled.
- Lock-up operation, however, is prohibited when A/T fluid temperature is too low.
- When the accelerator pedal is depressed (less than 2/8) on lock-up condition, the engine speed should not change abruptly. If there is an abrupt change in engine speed, there is no lock-up.

CONSULT-III Reference Value in Data Monitor Mode

INFOID:0000000001703253

Remarks: Specification data are reference values.

Item name	Condition	Display value (Approx)
TCC S/V DUTY	Lock-up OFF ⇔ Lock-up ON	4% ⇔ 94%

On Board Diagnosis Logic

INFOID:0000000001703254

- This is an OBD-II self-diagnostic item.
- Diagnostic trouble code “P0740 T/C CLUTCH SOL/V” with CONSULT-III or 7th judgement flicker without CONSULT-III is detected when TCM detects an improper voltage drop while it tries to operate solenoid valve.

Possible Cause

INFOID:0000000001703255

- Torque converter clutch solenoid valve
- Harness or connector
  (The solenoid circuit is open or shorted.)

DTC Confirmation Procedure

INFOID:0000000001703256

CAUTION:
- **Always drive vehicle at a safe speed.**
- **If performing this “DTC Confirmation Procedure” again, always turn ignition switch OFF and wait at least 10 seconds before continuing.**

After the repair, perform the following procedure to confirm the malfunction is eliminated.

WITH CONSULT-III

1. Turn ignition switch ON. (Do not start engine.)
2. Select “DATA MONITOR” mode for “A/T” with CONSULT-III and wait at least 1 second.
3. Touch “START”.
4. Start engine and maintain the following conditions for at least 5 consecutive seconds.
   VEHICLE SPEED: 80 km/h (50 MPH) or more
   THROTTLE POSI: 0.5/8 - 1.0/8
   SLCT LVR POSI: “D” position
   Driving location: Driving the vehicle uphill (increased engine load) will help maintain the driving conditions required for this test.
5. If the check result is NG, go to AT-121, "Diagnosis Procedure".

WITH GST

Follow the procedure “WITH CONSULT-III”.

WITHOUT CONSULT-III

1. Start engine.
2. Drive vehicle in D1→ D2→ D3→ D4→ D4 lock-up position.
3. Perform self-diagnosis. Refer to AT-78, "Diagnosis Procedure without CONSULT-III" .
4. If the check result is NG, go to AT-121, "Diagnosis Procedure" .

Wiring Diagram - AT - TCV

INFOID:0000000001703257

AT-TCV-01

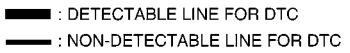

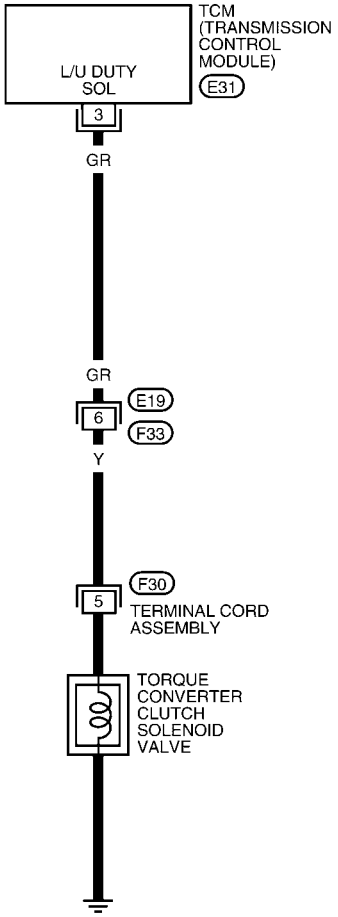

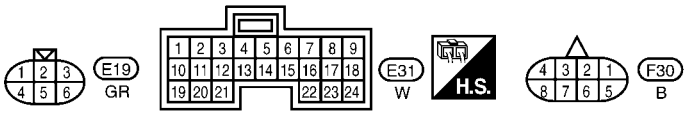

BCWA0653E

TCM TERMINALS AND REFERENCE VALUES

Refer to AT-71, "TCM Terminal and Reference Value".

Diagnosis Procedure

INFOID:0000000001703258

1. CHECK INPUT SIGNAL

With CONSULT-III

1. Start engine.
2. Select “MAIN SIGNALS” in “DATA MONITOR” mode for “A/T” with CONSULT-III.
3. Read out the value of “TCC S/V DUTY” while driving. Check the value changes according to driving speed.

Monitor item	Condition	Display value (Approx)
TCC S/V DUTY	Lock-up OFF ⇔ Lock-up ON	4 % ⇔ 94 %

Without CONSULT-III

1. Start engine.
2. Check voltage between TCM connector terminal and ground.

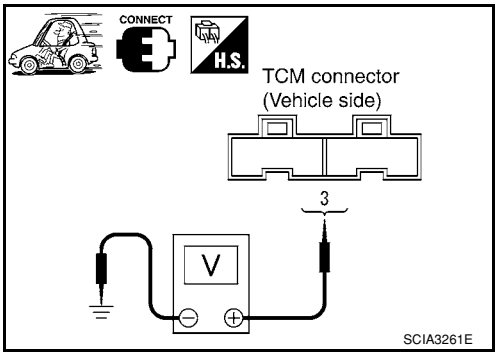

Name	Connector	Terminal	Condition	Judgement standard (Approx.)
Torque converter clutch solenoid valve	E31	3 - Ground	When A/T performs lock-up.	8 - 15 V
			When A/T does not perform lock-up.	0 V

OK or NG

OK >> GO TO 5.
NG >> GO TO 2.

2. CHECK TORQUE CONVERTER CLUTCH SOLENOID VALVE CIRCUIT

1. Turn ignition switch OFF.
2. Disconnect TCM connector.
3. Check resistance between TCM connector terminal and ground.

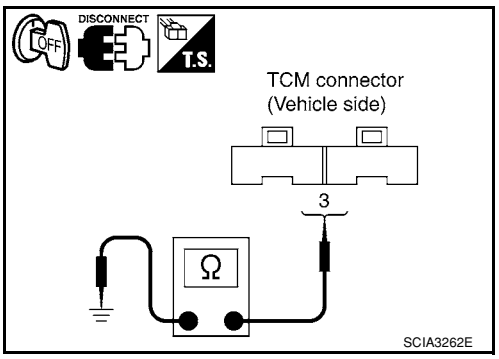

Solenoid Valve	Connector	Terminal	Resistance (Approx.)
Torque converter clutch solenoid valve	E31	3 - Ground	5 - 20 Ω

OK or NG

OK >> GO TO 5.
NG >> GO TO 3.

3. CHECK HARNESS BETWEEN TCM AND TERMINAL CORD ASSEMBLY HARNESS CONNECTOR

1. Turn ignition switch OFF.
2. Disconnect terminal cord assembly harness connector and TCM connector.

3. Check continuity between terminal cord assembly harness connector terminal and TCM connector terminal.

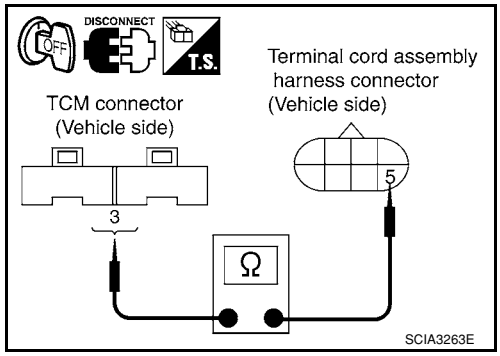

Item	Connector	Terminal	Continuity
TCM	E31	3	Yes
Terminal cord assembly harness connector	F30	5	

4. If OK, check harness for short to ground and short to power.
5. If OK, check continuity between ground and transaxle assembly.
6. Reinstall any part removed.

OK or NG

OK >> GO TO 4.
NG >> Repair open circuit or short to ground or short to power in harness or connectors.

4. CHECK VALVE RESISTANCE

1. Turn ignition switch OFF.
2. Disconnect terminal cord assembly connector in engine room.
3. Check resistance between terminal cord assembly harness connector terminal and ground.

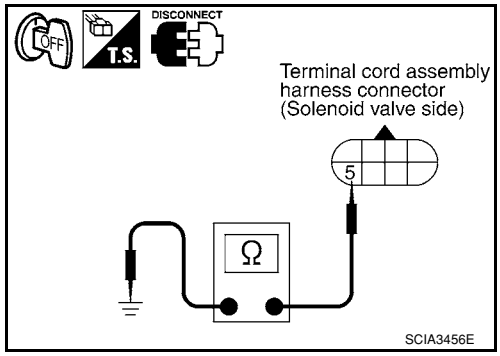

Solenoid valve	Connector	Terminal	Resistance (Approx.)
Torque converter clutch solenoid valve	F30	5 - Ground	5 - 20 Ω

OK or NG

OK >> GO TO 5.
NG >> Repair or replace damaged parts.

5. CHECK DTC

Perform AT-119, "DTC Confirmation Procedure" .

OK or NG

OK >> **INSPECTION END**
NG >> GO TO 6.

6. CHECK TCM

1. Check TCM input/output signal. Refer to AT-71, "TCM Terminal and Reference Value" .
2. If NG, recheck TCM pin terminals for damage or loose connection with harness connector.

OK or NG

OK >> **INSPECTION END**
NG >> Repair or replace damaged parts.

Component Inspection

INFOID:0000000001703259

TORQUE CONVERTER CLUTCH SOLENOID VALVE

- For removal, refer to AT-216, "Control Valve Assembly and Accumulators" .

Resistance Check

- Check resistance between terminal and ground.

Solenoid valve	Connector	Terminal	Resistance (Approx.)
Torque converter clutch solenoid valve	F30	5 - Ground	5 - 20 Ω

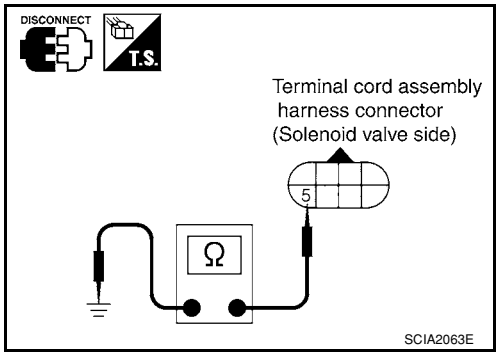

Operation Check

- Check solenoid valve by listening for its operating sound while applying battery voltage to the terminal and ground.

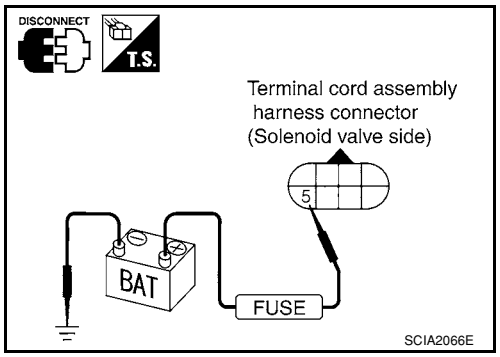

DTC P0744 A/T TCC S/V FUNCTION (LOCK-UP)

Description

INFOID:0000000001703260

- This malfunction will not be detected while the OD OFF indicator lamp is indicating another self-diagnosis malfunction.
- This malfunction is detected when the A/T does not shift into fourth gear position or the torque converter clutch does not lock-up as instructed by the TCM. This is not caused by electrical malfunction (circuits open or shorted) but by mechanical malfunction such as control valve sticking, improper solenoid valve operation, malfunctioning oil pump or torque converter clutch, etc.

CONSULT-III Reference Value in Data Monitor Mode

INFOID:0000000001703261

Remarks: Specification data are reference values.

Item name	Condition	Display value (Approx)
TCC S/V DUTY	Lock-up OFF ⇔ Lock-up ON	4% ⇔ 94%

On Board Diagnosis Logic

INFOID:0000000001703262

- This is an OBD-II self-diagnostic item.
- Diagnostic trouble code “P0744 A/T TCC S/V FNCTN” with CONSULT-III is detected when A/T cannot perform lock-up even if electrical circuit is good.
- This diagnosis monitors actual gear position by checking the torque converter slip ratio calculated by TCM as follows:
  Torque converter slip ratio = A x C/B
  A: Output shaft revolution signal from revolution sensor
  B: Engine speed signal from ECM
  C: Gear ratio determined as gear position which TCM supposes
  If the actual gear position is much lower than the position (4th) supposed by TCM, the slip ratio will be much less than normal. In case the ratio does not reach the specified value, TCM judges this diagnosis malfunction.
  This malfunction will be caused when shift solenoid valve B is stuck closed.
- Gear positions supposed by TCM are as follows.
  In case of gear position with no malfunctions: 1, 2, 3 and 4 positions
  In case of gear position with shift solenoid valve B stuck closed: 1, 2, 2 and 1* positions to each gear position above
  *: “P0744 A/T TCC S/V FNCTN” is detected.

Possible Cause

INFOID:0000000001703263

- Line pressure solenoid valve
- Torque converter clutch solenoid valve
- Each clutch
- Hydraulic control circuit

DTC Confirmation Procedure

INFOID:0000000001703264

CAUTION:
- **Always drive vehicle at a safe speed.**
- **If performing this “DTC Confirmation Procedure” again, always turn ignition switch OFF and wait at least 10 seconds before continuing.**

After the repair, perform the following procedure to confirm the malfunction is eliminated.

WITH CONSULT-III

1. Start engine and select “DATA MONITOR” mode for “A/T” with CONSULT-III.
2. Touch “START”.
3. Make sure that output voltage of A/T fluid temperature sensor is within the range below.
   FLUID TEMP SE: 0.4 - 1.5 V
   If out of range, drive vehicle to decrease voltage (warm up the fluid) or stop engine to increase voltage (cool down the fluid).
4. Select “TCC S/V FNCTN P0744” of “DTC WORK SUPPORT” mode for “A/T” with CONSULT-III and touch “START”.

5. Accelerate vehicle to more than 80 km/h (50 MPH) and maintain the following conditions continuously until “TESTING” has turned to “COMPLETE”. (It will take approximately 30 seconds after “TESTING” shows.)
   THROTTLE POSI: 1.0/8 - 2.0/8 (at all times during step 4)
   SLCT LVR POSI: “D” position
   TCC S/V DUTY: More than 94%
   VEHICLE SPEED: Constant speed of more than 80 km/h (50 MPH)
- **Make sure that “GEAR” shows “4”.**
- **For shift schedule, refer to AT-61, "Vehicle Speed at Which Gear Shifting Occurs".**
- **If “TESTING” does not appear on CONSULT-III for a long time, select “SELF-DIAG RESULTS”. In case a DTC other than “P0744 A/T TCC S/V FNCTN” is shown, refer to AT-73, "CONSULT-III Function (A/T)".**

6. Make sure that “OK” is displayed. (If “NG” is displayed, refer to “DIAGNOSTIC PROCEDURE”.)
   Refer to AT-125, "Diagnosis Procedure".
   Refer to AT-61, "Vehicle Speed at Which Lock-up Occurs/Releases".

WITH GST

Follow the procedure “WITH CONSULT-III”.

Diagnosis Procedure

INFOID:0000000001703265

1. CHECK SHIFT-UP (D3 TO D4)

During AT-55, "Cruise Test - Part 1".

Does A/T shift from D3 to D4 at the specified speed?

YES >> GO TO 11.
NO >> GO TO 2.

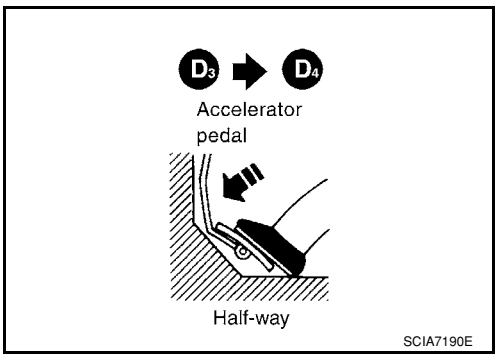

2. CHECK LINE PRESSURE

Perform line pressure test. Refer to AT-48, "Inspections Before Trouble Diagnosis".

OK or NG

OK >> GO TO 3.
NG >> GO TO 6.

3. CHECK CONTROL VALVE

1. Disassemble control valve assembly. Refer to AT-263, "Control Valve Assembly".
2. Check to ensure that:
- Valve, sleeve and plug slide along valve bore under their own weight.
- Valve, sleeve and plug are free from burrs, dents and scratches.
- Control valve springs are free from damage, deformation and fatigue.
- Hydraulic line is free from obstacles.

OK or NG

OK >> GO TO 4.
NG >> Repair control valve.

4. CHECK SHIFT-UP (D3 TO D4)

During AT-55, "Cruise Test - Part 1".

Does A/T shift from D3 to D4 at the specified speed?

YES >> GO TO 5.
NO >> Check control valve again. Repair or replace control valve assembly.

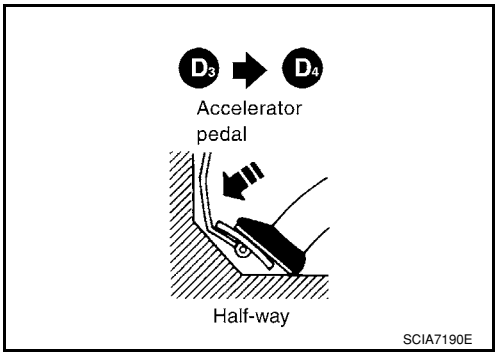

5. CHECK DTC

Perform AT-124, "DTC Confirmation Procedure".

OK or NG

OK >> **INSPECTION END**
NG >> GO TO 11. Check for proper lock-up.

6. CHECK VALVE RESISTANCE

1. Remove control valve assembly. Refer to AT-216, "Control Valve Assembly and Accumulators".
- Line pressure solenoid valve
2. Check resistance between terminal cord assembly harness connector terminal and ground. Refer to AT-130, "Wiring Diagram - AT - LPSV".

Solenoid valve	Connectror	Terminal	Resistance (Approx.)
Line pressure solenoid valve	F30	4 - Ground	2.5 - 5 Ω

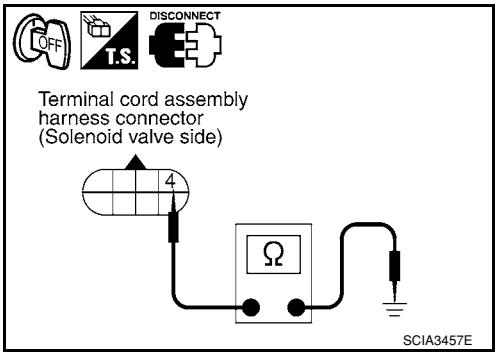

OK or NG

OK >> GO TO 7.
NG >> Replace solenoid valve assembly.

7. CHECK VALVE OPERATION

1. Remove control valve assembly. Refer to AT-216, "Control Valve Assembly and Accumulators".
- Line pressure solenoid valve
2. Check solenoid valve by listening for its operating sound while applying battery voltage to the terminal and ground. Refer to AT-130, "Wiring Diagram - AT - LPSV".

OK or NG

OK >> GO TO 8.
NG >> Replace solenoid valve assembly.

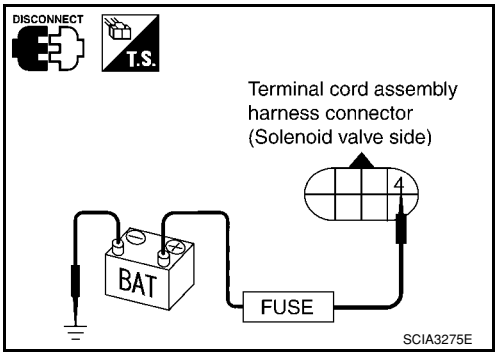

8. CHECK CONTROL VALVE

1. Disassemble control valve assembly. Refer to AT-263, "Control Valve Assembly".
2. Check line pressure circuit valves for sticking.
- Pressure regulator valve
- Pilot valve
- Pressure modifier valve

OK or NG

OK >> GO TO 9.
NG >> Repair control valve.

9. CHECK SHIFT-UP (D3 TO D4)

During AT-55, "Cruise Test - Part 1".

Does A/T shift from D3 to D4 at the specified speed?

YES >> GO TO 10.
NO >> Check control valve again. Repair or replace control valve assembly.

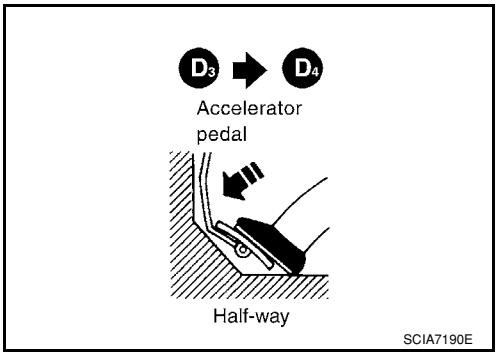

10. CHECK DTC

Perform AT-124, "DTC Confirmation Procedure".

OK or NG

OK >> **INSPECTION END**
NG >> GO TO 11. Check for proper lock-up.

11. CHECK LOCK-UP

During AT-55, "Cruise Test - Part 1".

A/T perform lock-up at the specified speed?

YES >> Perform “Cruise test — Part 1” again and return to the start point of this test group.
NO >> GO TO 12.

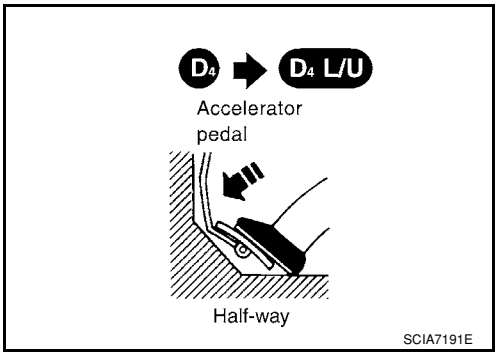

12. CHECK VALVE RESISTANCE

1. Remove control valve assembly. Refer to AT-216, "Control Valve Assembly and Accumulators".
- Torque converter clutch solenoid valve
2. Check resistance between terminal cord assembly harness connector terminal and ground. Refer to AT-120, "Wiring Diagram - AT - TCV".

Solenoid valve	Connectror	Terminal	Resistance (Approx.)
Torque converter clutch solenoid valve	F30	5 - Ground	5 - 20 Ω

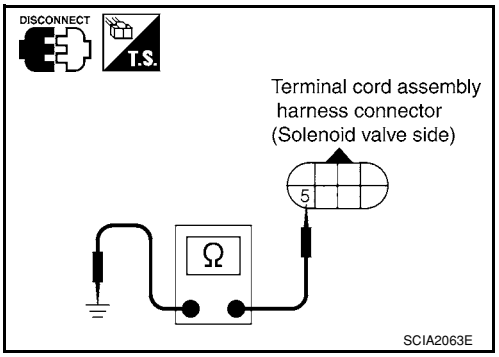

OK or NG

OK >> GO TO 13.
NG >> Replace solenoid valve assembly.

13. CHECK VALVE OPERATION

1. Remove control valve assembly. Refer to AT-216, "Control Valve Assembly and Accumulators".
- Torque converter clutch solenoid valve

2. Check solenoid valve by listening for its operating sound while applying battery voltage to the terminal and ground. Refer to AT-120, "Wiring Diagram - AT - TCV".

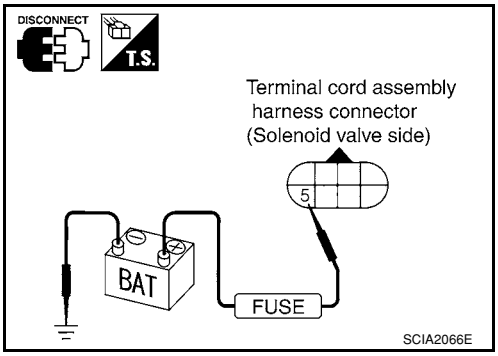

OK or NG

OK >> GO TO 14.
NG >> Replace solenoid valve assembly.

14. CHECK CONTROL VALVE

1. Disassemble control valve assembly. Refer to AT-263, "Control Valve Assembly".
2. Check control valves for sticking.
- Torque converter clutch control valve
- Torque converter clutch relief valve

OK or NG

OK >> GO TO 15.
NG >> Repair control valve.

15. CHECK LOCK-UP

During AT-55, "Cruise Test - Part 1".

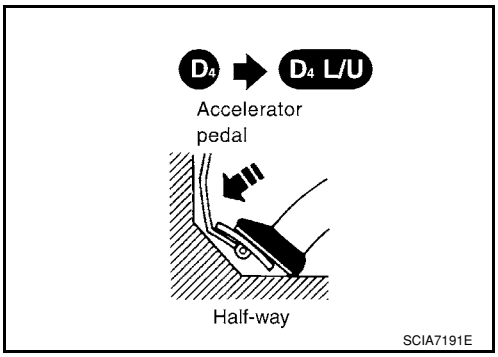

A/T perform lock-up at the specified speed?

YES >> GO TO 16.
NO >> Check control valve again. Repair or replace control valve assembly.

16. CHECK DTC

Perform AT-124, "DTC Confirmation Procedure".

OK or NG

OK >> **INSPECTION END**
NG >> Perform “Cruise test — Part 1” again and return to the start point of this test group.

DTC P0745 LINE PRESSURE SOLENOID VALVE

Description

INFOID:0000000001703266

The line pressure solenoid valve regulates the oil pump discharge pressure to suit the driving condition in response to signals sent from the TCM.
The line pressure duty cycle value is not constant when the closed throttle position switch is ON. To confirm the line pressure duty cycle at low-pressure, the accelerator (throttle) should be open until the closed throttle position switch is OFF.

CONSULT-III Reference Value in Data Monitor Mode

INFOID:0000000001703267

Remarks: Specification data are reference values.

Item name	Condition	Display value (Approx.)
LINE PRES DTY	Small throttle opening (Low line pressure) ⇔ Large throttle opening (High line pressure)	0% ⇔ 94%

On Board Diagnosis Logic

INFOID:0000000001703268

- This is an OBD-II self-diagnostic item.
- Diagnostic trouble code “P0745 LINE PRESSURE S/V” with CONSULT-III or 11th judgement flicker without CONSULT-III is detected when TCM detects an improper voltage drop while it tries to operate the solenoid valve.

Possible Cause

INFOID:0000000001703269

- Harness or connector
  (The solenoid circuit is open or shorted.)
- Line pressure solenoid valve

DTC Confirmation Procedure

INFOID:0000000001703270

CAUTION:
If performing this “DTC Confirmation Procedure” again, always turn ignition switch OFF and wait at least 10 seconds before continuing.
After the repair, perform the following procedure to confirm the malfunction is eliminated.

WITH CONSULT-III

1. Turn ignition switch ON and select “DATA MONITOR” mode for “A/T” with CONSULT-III.
2. Touch “START”.
3. Depress accelerator pedal completely and wait at least 1 second.
4. If the check result is NG, go to AT-131, "Diagnosis Procedure" .

WITH GST

Follow the procedure “WITH CONSULT-III”.

WITHOUT CONSULT-III

1. Start engine.
2. With brake pedal depressed, shift the lever from “P”→“N”→“D”→“N”→“P” positions.
3. Perform self-diagnosis. Refer to AT-78, "Diagnosis Procedure without CONSULT-III" .
4. If the check result is NG, go to AT-131, "Diagnosis Procedure" .

Wiring Diagram - AT - LPSV

INFOID:0000000001703271

AT-LPSV-01

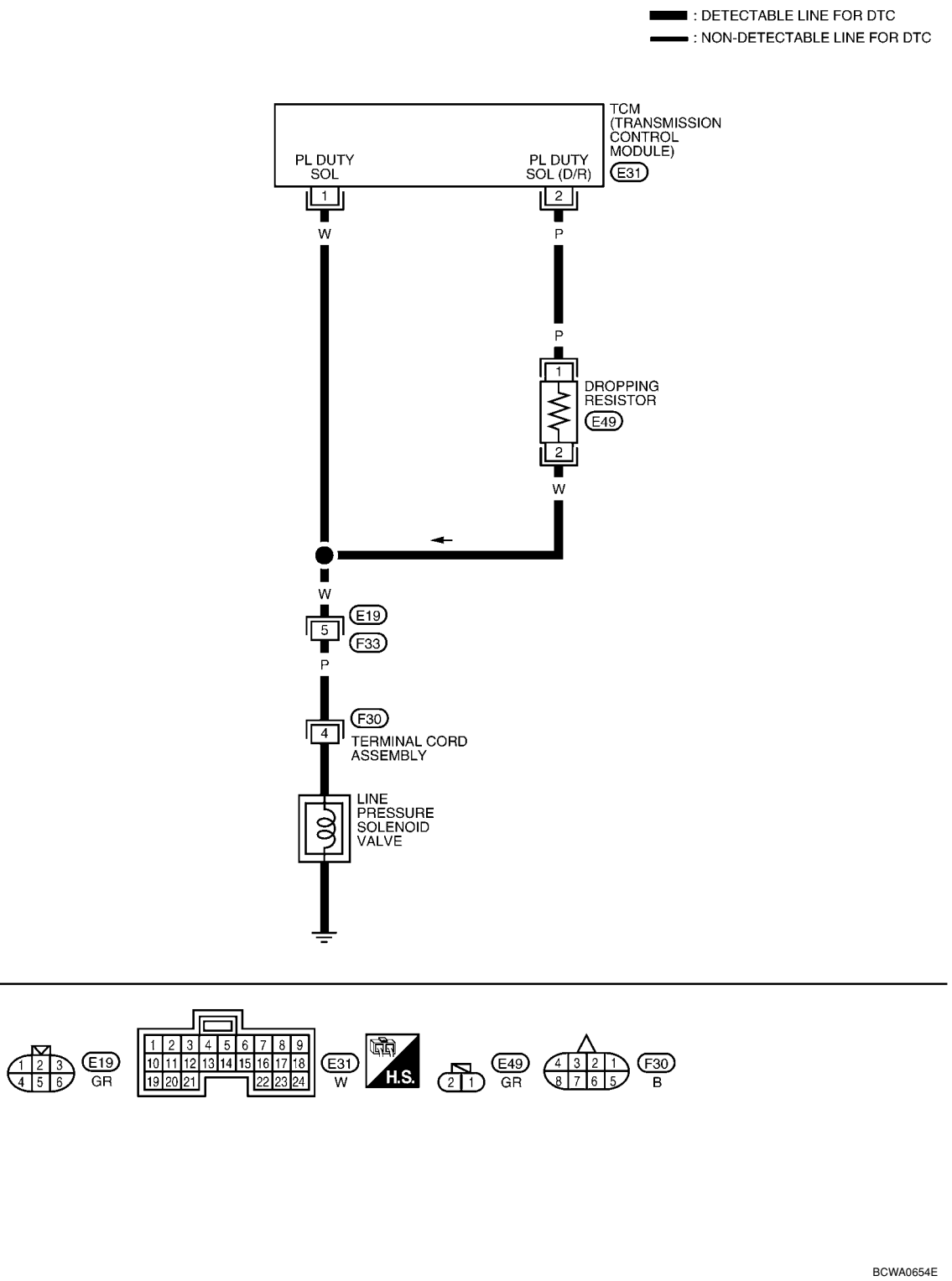

TCM TERMINALS AND REFERENCE VALUES

Refer to AT-71, "TCM Terminal and Reference Value".

Diagnosis Procedure

INFOID:0000000001703272

1. CHECK INPUT SIGNAL

With CONSULT-III

1. Turn ignition switch ON. (Do not start engine.)
2. Select “MAIN SIGNALS” in “DATA MONITOR” mode for “A/T” with CONSULT-III.
3. Read out the value of “LINE PRES DTY” while driving. Check the value changes according to driving speed.

Item name	Condition	Display value
LINE PRES DTY	Small throttle opening (Low line pressure) ⇔ Large throttle opening (High line pressure)	0 % ⇔ 94 %

Without CONSULT-III

1. Turn ignition switch ON. (Do not start engine.)
2. Check voltage between TCM connector terminals and ground.

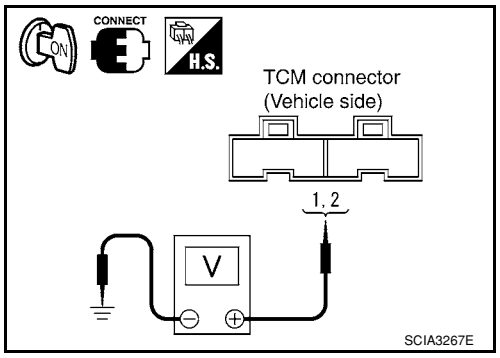

Item	Connector	Terminal	Condition	Judgement standard (Approx.)
Line pressure solenoid valve	E31	1 - Ground	When releasing accelerator pedal after warming up engine.	1.5 - 3.0 V
			When depressing accelerator pedal fully after warming up engine.	0 V
Line pressure solenoid valve (with dropping resistor)	E31	2 - Ground	When releasing accelerator pedal after warming up engine.	4 - 14 V
			When depressing accelerator pedal fully after warming up engine.	0 V

OK or NG

OK >> GO TO 5.
NG >> GO TO 2.

2. CHECK DROPPING RESISTOR

1. Turn ignition switch OFF.
2. Disconnect dropping resistor harness connector in engine room.
3. Check resistance between terminals.

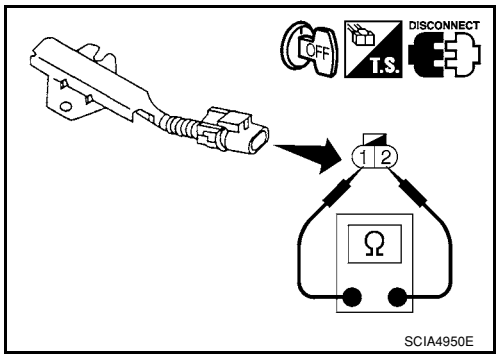

Item	Connector	Terminal	Resistance (Approx.)
Dropping resistor	E49	1 - 2	12 Ω

OK or NG

OK >> GO TO 3.
NG >> Repair or replace damaged parts.

3. CHECK VALVE RESISTANCE

1. Turn ignition switch OFF.
2. Disconnect terminal cord assembly connector in engine room.

3. Check resistance between terminal cord assembly harness connector terminal and ground.

Solenoid valve	Connector	Terminal	Resistance (Approx.)
Line pressure solenoid valve	F30	4 - Ground	2.5 - 5.0 Ω

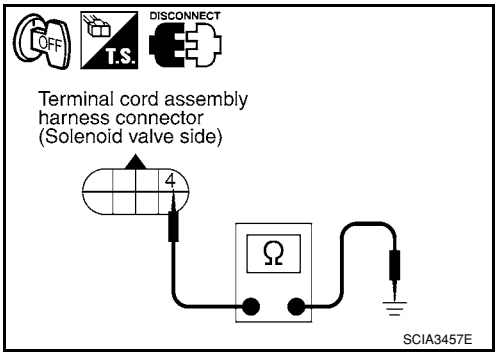

OK or NG

OK >> GO TO 4.
NG >> Repair or replace damaged parts.

4. CHECK HARNESS BETWEEN TCM AND TERMINAL CORD ASSEMBLY HARNESS CONNECTOR

1. Turn ignition switch OFF.
2. Disconnect terminal cord assembly harness connector and TCM connector.
3. Check continuity between terminal cord assembly harness connector terminal and TCM connector terminal.

Item	Connector	Terminal	Continuity
TCM	E31	1	Yes
Terminal cord assembly harness connector	F30	4	

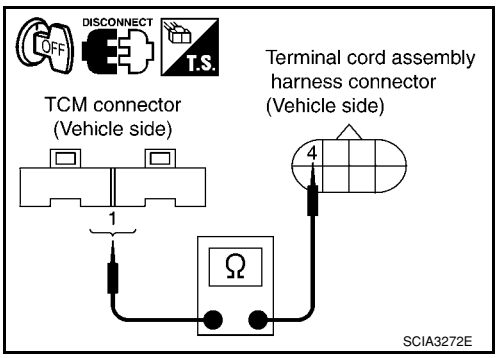

4. Check continuity between terminal cord assembly harness connector terminal and dropping resistor harness connector terminal.

Item	Connector	Terminal	Continuity
Dropping resistor harness connector	E49	2	Yes
Terminal cord assembly harness connector	F30	4	

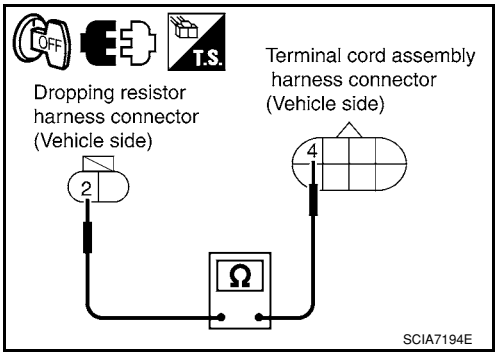

5. Check continuity between dropping resistor harness connector terminal and TCM connector terminal.

Item	Connector	Terminal	Continuity
TCM	E31	2	Yes
Dropping resistor harness connector	E49	1	

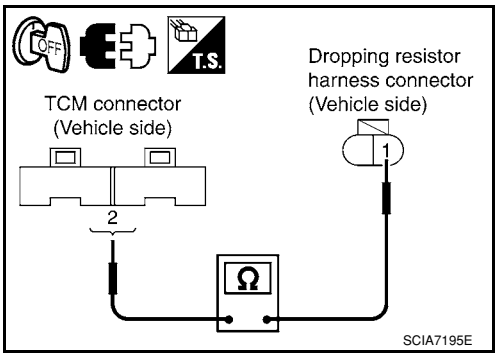

6. If OK, check harness for short to ground and short to power.
7. If OK, check continuity between ground and transaxle assembly.
8. Reinstall any part removed.

OK or NG

OK >> GO TO 5.
NG >> Repair open circuit or short to ground or short to power in harness or connectors.

5. CHECK DTC

Perform AT-129, "DTC Confirmation Procedure" .

OK or NG

OK >> **INSPECTION END**

NG >> GO TO 6.

6. CHECK TCM

1. Check TCM input/output signal. Refer to AT-71, "TCM Terminal and Reference Value" .
2. If NG, recheck TCM pin terminals for damage or loose connection with harness connector.

OK or NG

OK >> **INSPECTION END**
NG >> Repair or replace damaged parts.

Component Inspection

INFOID:0000000001703273

LINE PRESSURE SOLENOID VALVE

- For removal, refer to AT-216, "Control Valve Assembly and Accumulators" .

Resistance Check

- Check resistance between terminal and ground.

Solenoid valve	Connector	Terminal	Resistance (Approx.)
Line pressure solenoid valve	F30	4 - Ground	2.5 - 5 Ω

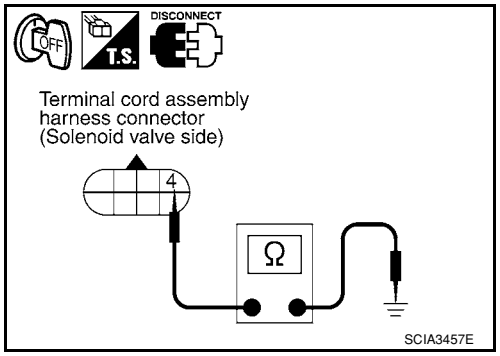

Operation Check

- Check solenoid valve by listening for its operating sound while applying battery voltage to the terminal and ground.

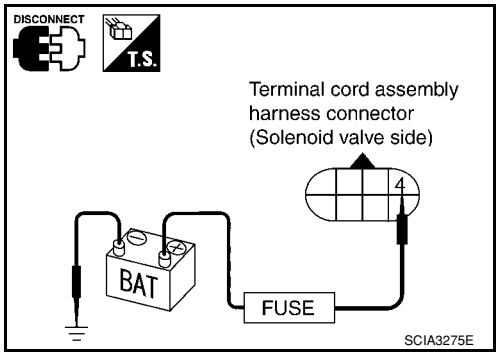

DROPPING RESISTOR

- Check resistance between terminals.

Item	Connector	Terminal	Resistance (Approx.)
Dropping resistor	E49	1 - 2	12 Ω

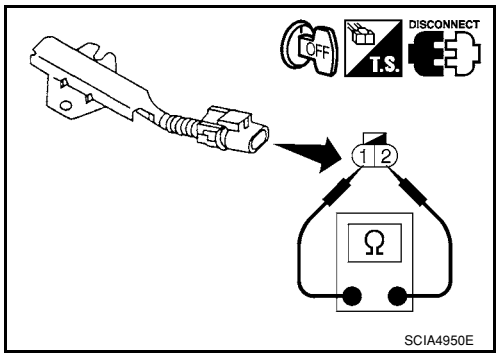

DTC P0750 SHIFT SOLENOID VALVE A

Description

INFOID:0000000001703274

Shift solenoid valves A and B are turned ON or OFF by the TCM in response to signals sent from the PNP switch, vehicle speed and ECM (throttle opening). Gears will then be shifted to the optimum position.

Gear position	1	2	3	4
Shift solenoid valve A	ON (Closed)	OFF (Open)	OFF (Open)	ON (Closed)
Shift solenoid valve B	ON (Closed)	ON (Closed)	OFF (Open)	OFF (Open)

CONSULT-III Reference Value in Data Monitor Mode

INFOID:0000000001703275

Item name	Condition	Display value
SHIFT S/V A	When shift solenoid valve A operates. (When driving in “D1 ” or “D4 ”.)	ON
	When shift solenoid valve A does not operate. (When driving in “D2 ” or “D3 ”.)	OFF

On Board Diagnosis Logic

INFOID:0000000001703276

- This is an OBD-II self-diagnostic item.
- Diagnostic trouble code “P0750 SHIFT SOLENOID/V A” with CONSULT-III or 4th judgement flicker without CONSULT-III is detected when TCM detects an improper voltage drop when it tries to operate the solenoid valve.

Possible Cause

INFOID:0000000001703277

- Harness or connector
  (The solenoid circuit is open or shorted.)
- Shift solenoid valve A

DTC Confirmation Procedure

INFOID:0000000001703278

CAUTION:
- **Always drive vehicle at a safe speed.**
- **If performing this “DTC Confirmation Procedure” again, always turn ignition switch OFF and wait at least 10 seconds before continuing.**

After the repair, perform the following procedure to confirm the malfunction is eliminated.

WITH CONSULT-III

1. Turn ignition switch ON and select “DATA MONITOR” mode for “A/T” with CONSULT-III.
2. Touch “START”.
3. Start engine.
4. Drive vehicle in “D” position and allow the transaxle to shift 1 → 2 (“GEAR”).
5. If the check result is NG, go to AT-136, "Diagnosis Procedure" .

WITH GST

Follow the procedure “WITH CONSULT-III”.

WITHOUT CONSULT-III

1. Start engine.
2. Drive vehicle in D1→ D2 position.
3. Perform self-diagnosis. Refer to AT-78, "Diagnosis Procedure without CONSULT-III" .
4. If the check result is NG, go to AT-136, "Diagnosis Procedure" .

Wiring Diagram - AT - SSV/A

INFOID:0000000001703279

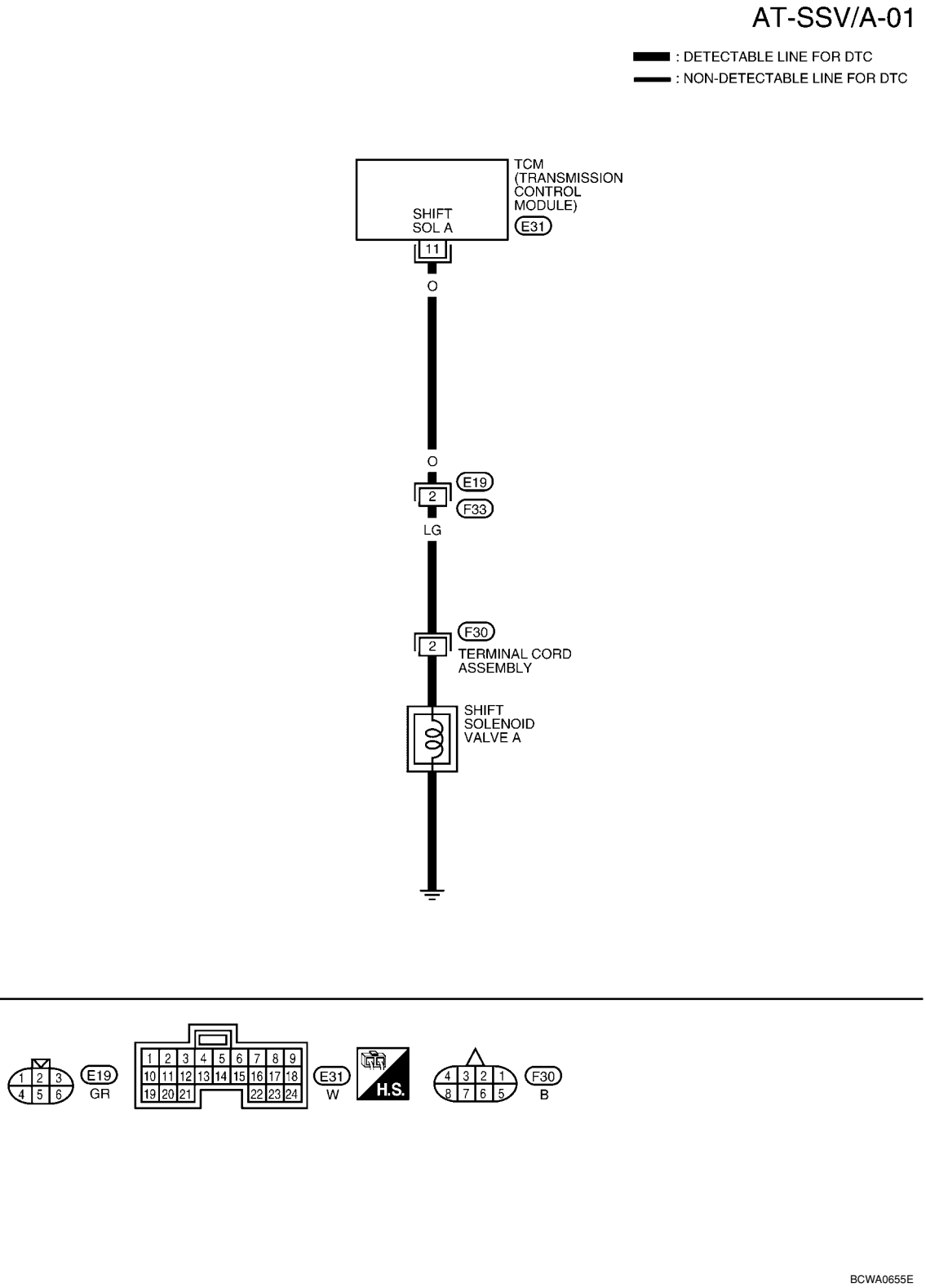

TCM TERMINALS AND REFERENCE VALUES

Refer to AT-71, "TCM Terminal and Reference Value".

Diagnosis Procedure

INFOID:0000000001703280

1. CHECK INPUT SIGNAL

With CONSULT-III

1. Start engine.
2. Select “MAIN SIGNALS” in “DATA MONITOR” mode for “A/T” with CONSULT-III.
3. Read out the value of “SHIFT S/V A” while driving.
   Check the value changes according to driving speed.

Item name	Condition	Display value
SHIFT S/V A	When shift solenoid valve A operates. (When driving in “D1” or “D4”.)	ON
	When shift solenoid valve A does not operate. (When driving in “D2” or “D3”.)	OFF

Without CONSULT-III

1. Start engine.
2. Check voltage between TCM connector terminal and ground.

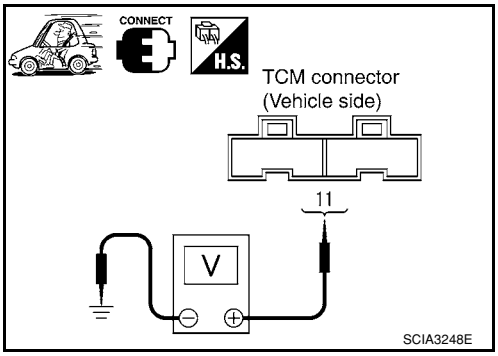

Item	Connector	Terminal	Condition	Judgement standard (Approx.)
Shift solenoid valve A	E31	11 - Ground	When shift solenoid valve A operates. (When driving in “D1” or “D4”.)	Battery voltage
			When shift solenoid valve A does not operate. (When driving in “D2” or “D3”.)	0 V

OK or NG

OK >> GO TO 5.
NG >> GO TO 2.

2. CHECK SHIFT SOLENOID VALVE A CIRCUIT

1. Turn ignition switch OFF.
2. Disconnect TCM connector.
3. Check resistance between TCM connector terminal and ground.

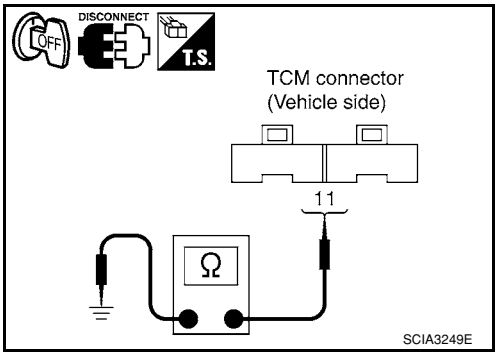

Solenoid Valve	Connector	Terminal	Resistance (Approx.)
Shift solenoid valve A	E31	11 - Ground	20 - 30 Ω

OK or NG

OK >> GO TO 5.
NG >> GO TO 3.

3. CHECK HARNESS BETWEEN TCM AND TERMINAL CORD ASSEMBLY HARNESS CONNECTOR

1. Turn ignition switch OFF.
2. Disconnect terminal cord assembly harness connector and TCM connector.

3. Check continuity between terminal cord assembly harness connector terminal and TCM connector terminal.

Item	Connector	Terminal	Continuity
TCM	E31	11	Yes
Terminal cord assembly harness connector	F30	2	

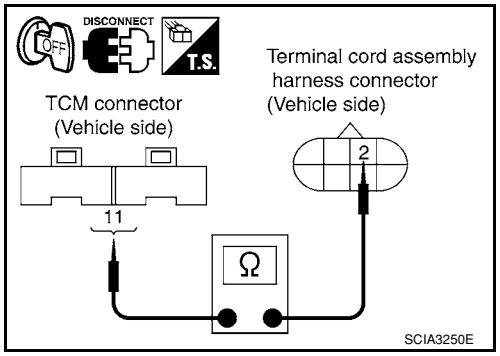

4. If OK, check harness for short to ground and short to power.
5. If OK, check continuity between ground and transaxle assembly.
6. Reinstall any part removed.

OK or NG

OK >> GO TO 4.
NG >> Repair open circuit or short to ground or short to power in harness or connectors.

4. CHECK VALVE RESISTANCE

1. Turn ignition switch OFF.
2. Disconnect terminal cord assembly connector in engine room.
3. Check resistance between terminal cord assembly harness connector terminal and ground.

Solenoid valve	Connector	Terminal	Resistance (Approx.)
Shift solenoid valve A	F30	2 - Ground	20 - 30 Ω

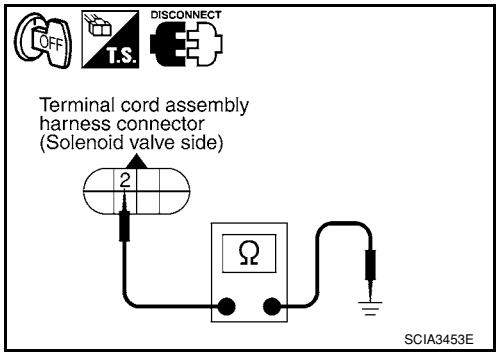

OK or NG

OK >> GO TO 5.
NG >> Repair or replace damaged parts.

5. CHECK DTC

Perform AT-134, "DTC Confirmation Procedure" .

OK or NG

OK >> **INSPECTION END**
NG >> GO TO 6.

6. CHECK TCM

1. Check TCM input/output signal. Refer to AT-71, "TCM Terminal and Reference Value" .
2. If NG, recheck TCM pin terminals for damage or loose connection with harness connector.

OK or NG

OK >> **INSPECTION END**
NG >> Repair or replace damaged parts.

Component Inspection

INFOID:0000000001703281

SHIFT SOLENOID VALVE A

- For removal, refer to AT-216, "Control Valve Assembly and Accumulators" .

Resistance Check

- Check resistance between terminal and ground.

Solenoid valve	Connector	Terminal	Resistance (Approx.)
Shift solenoid valve A	F30	2 - Ground	20 - 30 Ω

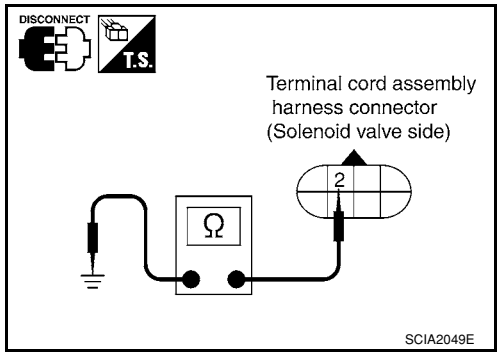

Operation Check

- Check solenoid valve by listening for its operating sound while applying battery voltage to the terminal and ground.

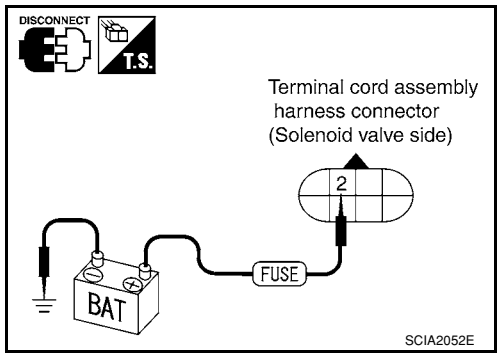

DTC P0755 SHIFT SOLENOID VALVE B

Description

INFOID:0000000001703282

Shift solenoid valves A and B are turned ON or OFF by the TCM in response to signals sent from the PNP switch, vehicle speed and ECM (throttle opening). Gears will then be shifted to the optimum position.

Gear position	1	2	3	4
Shift solenoid valve A	ON (Closed)	OFF (Open)	OFF (Open)	ON (Closed)
Shift solenoid valve B	ON (Closed)	ON (Closed)	OFF (Open)	OFF (Open)

CONSULT-III Reference Value in Data Monitor Mode

INFOID:0000000001703283

Item name	Condition	Display value
SHIFT S/V B	When shift solenoid valve B operates. (When driving in “D1 ” or “D2 ”.)	ON
	When shift solenoid valve B does not operate. (When driving in “D3 ” or “D4 ”.)	OFF

On Board Diagnosis Logic

INFOID:0000000001703284

- This is an OBD-II self-diagnostic item.
- Diagnostic trouble code “P0755 SHIFT SOLENOID/V B” with CONSULT-III or 5th judgement flicker without CONSULT-III is detected when TCM detects an improper voltage drop when it tries to operate the solenoid valve.

Possible Cause

INFOID:0000000001703285

- Harness or connector
  (The solenoid circuit is open or shorted.)
- Shift solenoid valve B

DTC Confirmation Procedure

INFOID:0000000001703286

CAUTION:
- **Always drive vehicle at a safe speed.**
- **If performing this “DTC Confirmation Procedure” again, always turn ignition switch OFF and wait at least 10 seconds before continuing.**

After the repair, perform the following procedure to confirm the malfunction is eliminated.

WITH CONSULT-III

1. Turn ignition switch ON and select “DATA MONITOR” mode for “A/T” with CONSULT-III.
2. Touch “START”.
3. Start engine.
4. Drive vehicle in D position and allow the transaxle to shift 1 → 2 → 3 (“GEAR”).
5. If the check result is NG, go to AT-141, "Diagnosis Procedure" .

WITH GST

Follow the procedure “WITH CONSULT-III”.

WITHOUT CONSULT-III

1. Start engine.
2. Drive vehicle in D1→ D2→ D3 position.
3. Perform self-diagnosis. Refer to AT-78, "Diagnosis Procedure without CONSULT-III" .
4. If the check result is NG, go to AT-141, "Diagnosis Procedure" .

Wiring Diagram - AT - SSV/B

INFOID:0000000001703287

AT-SSV/B-01

: DETECTABLE LINE FOR DTC
: NON-DETECTABLE LINE FOR DTC

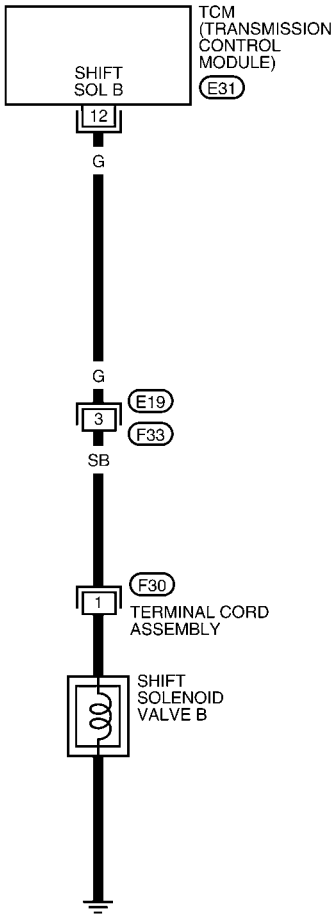

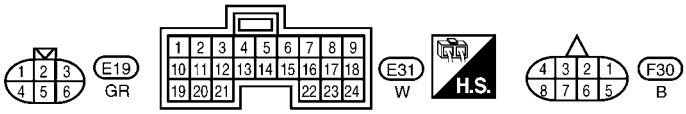

BCWA0656E

TCM TERMINALS AND REFERENCE VALUES

Refer to AT-71, "TCM Terminal and Reference Value".

Diagnosis Procedure

INFOID:0000000001703288

1. CHECK INPUT SIGNAL

With CONSULT-III

1. Start engine.
2. Select “MAIN SIGNALS” in “DATA MONITOR” mode for “A/T” with CONSULT-III.
3. Read out the value of “SHIFT S/V B” while driving.
   Check the value changes according to driving speed.

Item name	Condition	Display value
SHIFT S/V B	When shift solenoid valve B operates. (When driving in “D1” or “D2”.)	ON
	When shift solenoid valve B does not operate. (When driving in “D3” or “D4”.)	OFF

Without CONSULT-III

1. Start engine.
2. Check voltage between TCM connector terminal and ground.

Item	Connector	Terminal	Condition	Judgement standard (Approx.)
Shift solenoid valve B	E31	12 - Ground	When shift solenoid valve B operates. (When driving in “D1” or “D2”.)	Battery voltage
			When shift solenoid valve B does not operate. (When driving in “D3” or “D4”.)	0 V

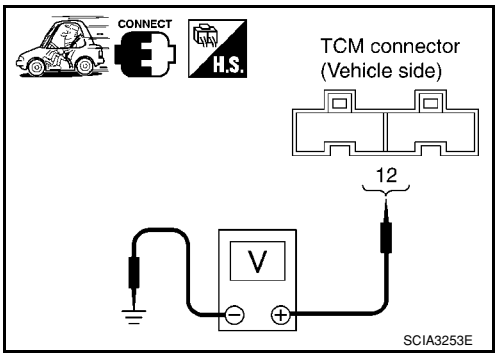

OK or NG

OK >> GO TO 5.
NG >> GO TO 2.

2. CHECK SHIFT SOLENOID VALVE B CIRCUIT

1. Turn ignition switch OFF.
2. Disconnect TCM connector.
3. Check resistance between TCM connector terminal and ground.

Solenoid Valve	Connector	Terminal	Resistance (Approx.)
Shift solenoid valve B	E31	12 - Ground	5 - 20 Ω

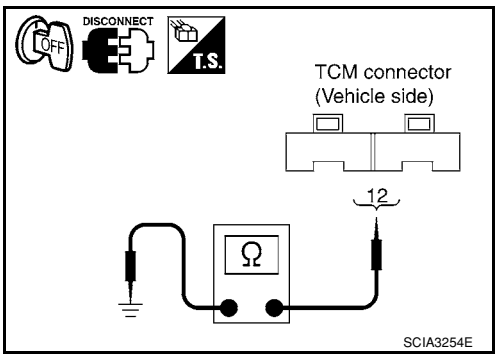

OK or NG

OK >> GO TO 5.
NG >> GO TO 3.

3. CHECK HARNESS BETWEEN TCM AND TERMINAL CORD ASSEMBLY HARNESS CONNECTOR

1. Turn ignition switch OFF.
2. Disconnect terminal cord assembly harness connector and TCM connector.

3. Check continuity between terminal cord assembly harness connector terminal and TCM connector terminal.

Item	Connector	Terminal	Continuity
TCM	E31	12	Yes
Terminal cord assembly harness connector	F30	1	

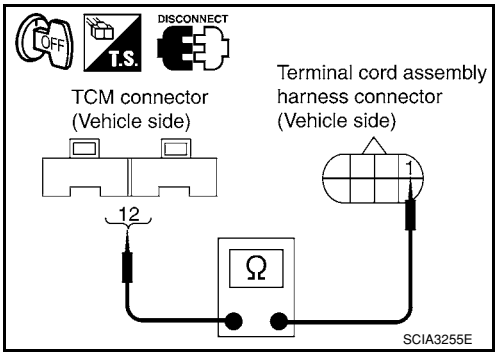

4. If OK, check harness for short to ground and short to power.
5. If OK, check continuity between ground and transaxle assembly.
6. Reinstall any part removed.

OK or NG

OK >> GO TO 4.
NG >> Repair open circuit or short to ground or short to power in harness or connectors.

4. CHECK VALVE RESISTANCE

1. Turn ignition switch OFF.
2. Disconnect terminal cord assembly connector in engine room.
3. Check resistance between terminal cord assembly harness connector terminal and ground.

Solenoid valve	Connector	Terminal	Resistance (Approx.)
Shift solenoid valve B	F30	1 - Ground	5 - 20 Ω

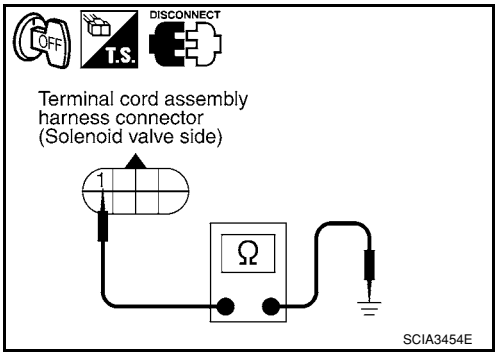

OK or NG

OK >> GO TO 5.
NG >> Repair or replace damaged parts.

5. CHECK DTC

Perform AT-139, "DTC Confirmation Procedure" .

OK or NG

OK >> **INSPECTION END**
NG >> GO TO 6.

6. CHECK TCM

1. Check TCM input/output signal. Refer to AT-71, "TCM Terminal and Reference Value" .
2. If NG, recheck TCM pin terminals for damage or loose connection with harness connector.

OK or NG

OK >> **INSPECTION END**
NG >> Repair or replace damaged parts.

Component Inspection

INFOID:0000000001703289

SHIFT SOLENOID VALVE B

- For removal, refer to AT-216, "Control Valve Assembly and Accumulators" .

Resistance Check

- Check resistance between terminal and ground.

Solenoid valve	Connector	Terminal	Resistance (Approx.)
Shift solenoid valve B	F30	1 - Ground	5 - 20 Ω

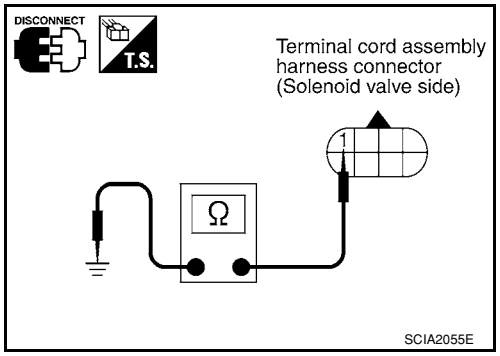

Operation Check

- Check solenoid valve by listening for its operating sound while applying battery voltage to the terminal and ground.

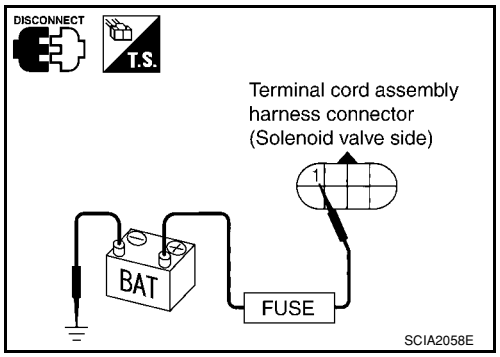

DTC P1760 OVERRUN CLUTCH SOLENOID VALVE

Description

INFOID:0000000001703290

The overrun clutch solenoid valve is activated by the TCM in response to signals sent from the PNP switch, overdrive control switch, vehicle speed and ECM (throttle opening). The overrun clutch operation will then be controlled.

CONSULT-III Reference Value in Data Monitor Mode

INFOID:0000000001703291

Item name	Condition	Display value
OVERRUN/C S/V	When overrun clutch solenoid valve operates. (When overrun clutch disengaged. Refer to AT-19 .)	ON
	When overrun clutch solenoid valve does not operate. (When overrun clutch engaged. Refer to AT-19 .)	OFF

On Board Diagnosis Logic

INFOID:0000000001703292

- This is an OBD-II self-diagnostic item.
- Diagnostic trouble code “P1760 OVERRUN CLUTCH S/V” with CONSULT-III or 6th judgement flicker without CONSULT-III is detected when TCM detects an improper voltage drop when it tries to operate solenoid valve.

Possible Cause

INFOID:0000000001703293

- Harness or connector
  (The solenoid circuit is open or shorted.)
- Overrun clutch solenoid valve

DTC Confirmation Procedure

INFOID:0000000001703294

CAUTION:
- **Always drive vehicle at a safe speed.**
- **If performing this “DTC Confirmation Procedure” again, always turn ignition switch OFF and wait at least 10 seconds before continuing.**

After the repair, perform the following procedure to confirm the malfunction is eliminated.

WITH CONSULT-III

1. Turn ignition switch ON and select “DATA MONITOR” mode for “A/T” with CONSULT-III.
2. Touch “START”.
3. Start engine.
4. Accelerate vehicle to a speed of more than 10 km/h (6 MPH) with “D” position (OD ON).
5. Release accelerator pedal completely with “D” position (OD OFF).
6. If the check result is NG, go to AT-146, "Diagnosis Procedure".

WITH GST

Follow the procedure “WITH CONSULT-III”.

WITHOUT CONSULT-III

1. Start engine.
2. Drive vehicle under the following conditions:
   Selector lever position: “D” position (OD ON)
   Vehicle speed: Higher than 10 km/h (6 MPH)
3. Perform self-diagnosis. Refer to AT-78, "Diagnosis Procedure without CONSULT-III" .
4. If the check result is NG, go to AT-146, "Diagnosis Procedure" .

Wiring Diagram - AT - OVRCSV

INFOID:0000000001703295

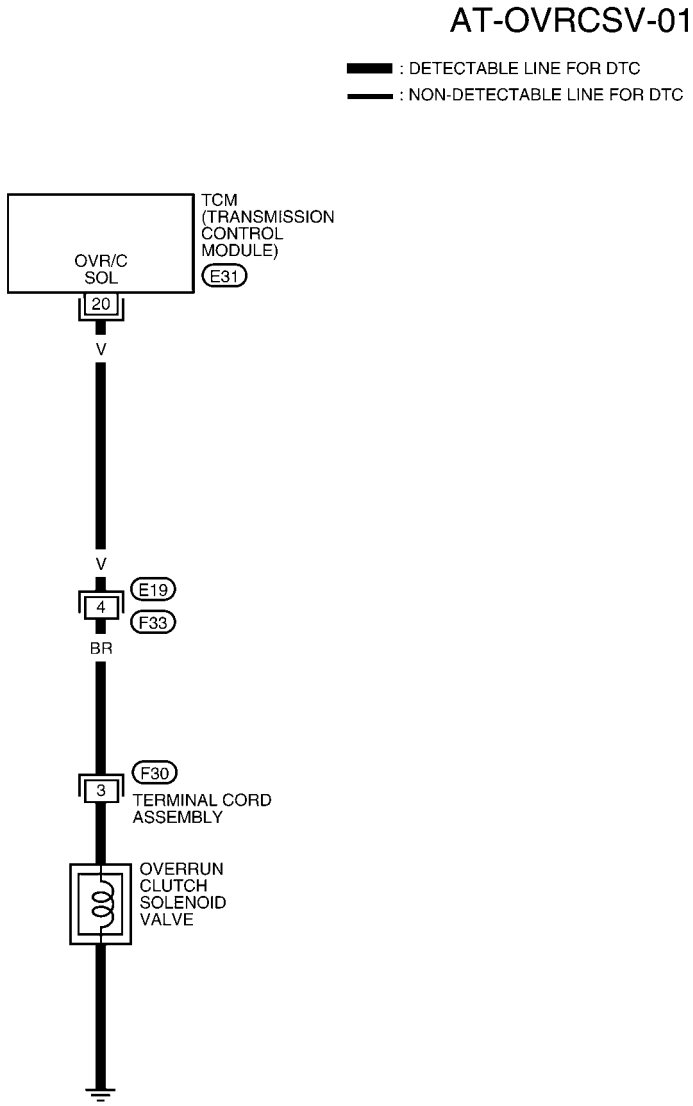

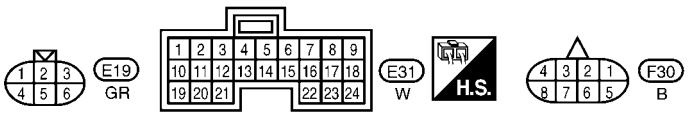

BCWA0657E

TCM TERMINALS AND REFERENCE VALUES

Refer to AT-71, "TCM Terminal and Reference Value".

Diagnosis Procedure

INFOID:0000000001703296

1. CHECK INPUT SIGNAL

With CONSULT-III

1. Start engine.
2. Select “MAIN SIGNALS” in “DATA MONITOR” mode for “A/T” with CONSULT-III.
3. Read out the value of “OVERRUN/C S/V” while driving.
   Check the value changes according to driving speed.

Item name	Condition	Display value
OVERRUN/C S/V	When overrun clutch solenoid valve operates. (When overrun clutch disengaged. Refer to AT-19 .)	ON
	When overrun clutch solenoid valve does not operate. (When overrun clutch engaged. Refer to AT-19 .)	OFF

Without CONSULT-III

1. Start engine.
2. Check voltage between TCM connector terminal and ground.

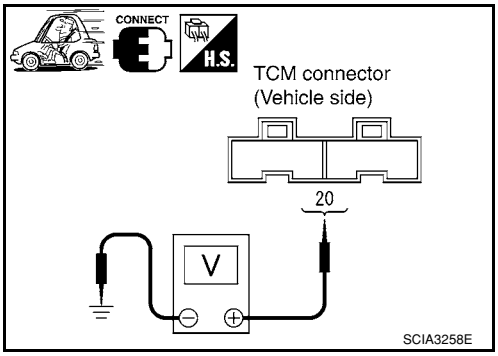

Item	Connector	Terminal	Condition	Judgement standard (Approx.)
Overrun clutch solenoid valve	E31	20 - Ground	When overrun clutch solenoid valve operates. (When overrun clutch disengaged. Refer to AT-19 .)	Battery voltage
			When overrun clutch solenoid valve dose not operate. (When overrun clutch engaged. Refer to AT-19 .)	0 V

OK or NG

OK >> GO TO 5.
NG >> GO TO 2.

2. CHECK OVERRUN CLUTCH SOLENOID VALVE CIRCUIT

1. Turn ignition switch OFF.
2. Disconnect TCM connector.
3. Check resistance between TCM connector terminal and ground.

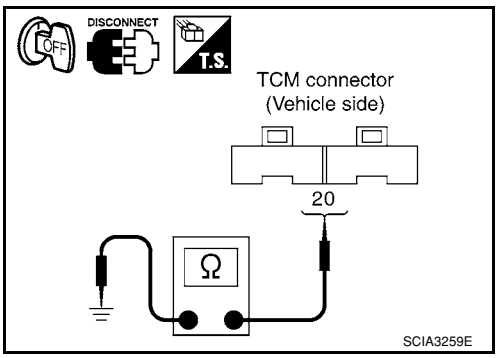

Solenoid Valve	Connector	Terminal	Resistance (Approx.)
Overrun clutch solenoid valve	E31	20 - Ground	20 - 30 Ω

OK or NG

OK >> GO TO 5.
NG >> GO TO 3.

3. CHECK HARNESS BETWEEN TCM AND TERMINAL CORD ASSEMBLY HARNESS CONNECTOR

1. Turn ignition switch OFF.
2. Disconnect terminal cord assembly harness connector and TCM connector.

3. Check continuity between terminal cord assembly harness connector terminal and TCM connector terminal.

Item	Connector	Terminal	Continuity
TCM	E31	20	Yes
Terminal cord assembly harness connector	F30	3	

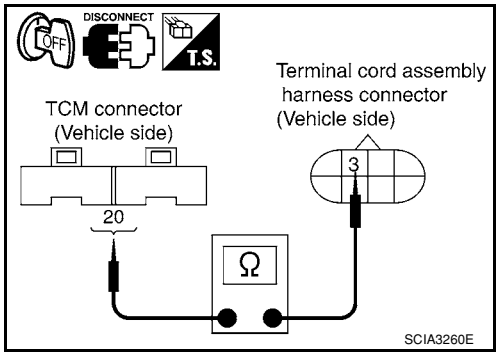

4. If OK, check harness for short to ground and short to power.
5. If OK, check continuity between ground and transaxle assembly.
6. Reinstall any part removed.

OK or NG

OK >> GO TO 4.
NG >> Repair open circuit or short to ground or short to power in harness or connectors.

4. CHECK VALVE RESISTANCE

1. Turn ignition switch OFF.
2. Disconnect terminal cord assembly connector in engine room.
3. Check resistance between terminal cord assembly harness connector terminal and ground.

Solenoid valve	Connector	Terminal	Resistance (Approx.)
Overrun clutch solenoid valve	F30	3 - Ground	20 - 30 Ω

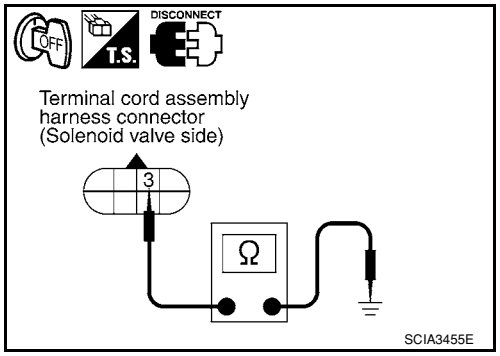

OK or NG

OK >> GO TO 5.
NG >> Repair or replace damaged parts.

5. CHECK DTC

Perform AT-144, "DTC Confirmation Procedure".

OK or NG

OK >> **INSPECTION END**
NG >> GO TO 6.

6. CHECK TCM

1. Check TCM input/output signal. Refer to AT-71, "TCM Terminal and Reference Value".
2. If NG, recheck TCM pin terminals for damage or loose connection with harness connector.

OK or NG

OK >> **INSPECTION END**
NG >> Repair or replace damaged parts.

Component Inspection

INFOID:0000000001703297

OVERRUN CLUTCH SOLENOID VALVE

- For removal, refer to AT-216, "Control Valve Assembly and Accumulators".

Resistance Check

- Check resistance between terminal and ground.

Solenoid valve	Connector	Terminal	Resistance (Approx.)
Overrun clutch solenoid valve	F30	3 - Ground	20 - 30 Ω

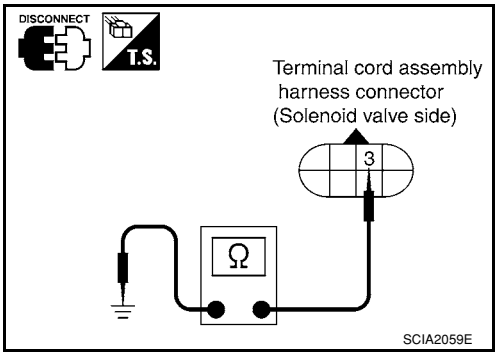

Operation Check

- Check solenoid valve by listening for its operating sound while applying battery voltage to the terminal and ground.

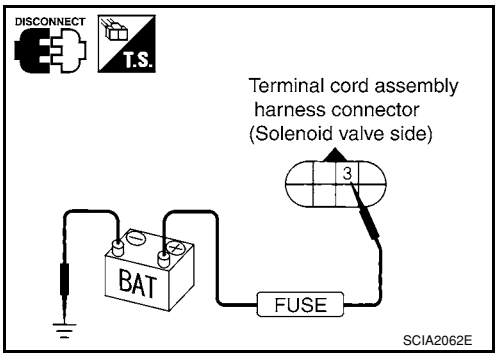

DTC VEHICLE SPEED SENSOR MTR

Description

INFOID:0000000001703298

The vehicle speed sensor·MTR is built into the speedometer assembly. The sensor functions as an auxiliary device to the revolution sensor when it is malfunctioning. The TCM will then use a signal sent from the vehicle speed sensor·MTR.

CONSULT-III Reference Value in Data Monitor Mode

INFOID:0000000001703299

Remarks: Specification data are reference values.

Item name	Condition	Display value
VHCL/S SE-MTR	During driving	Approximately matches the speedometer reading.

On Board Diagnosis Logic

INFOID:0000000001703300

- This is not an OBD-II self-diagnostic item.
- Diagnostic trouble code “VHCL SPEED SEN-MTR” with CONSULT-III or 2nd judgement flicker without CONSULT-III is detected when TCM does not receive the proper voltage signal from the sensor.

Possible Cause

INFOID:0000000001703301

- Harness or connector
  (The sensor circuit is open or shorted.)
- Vehicle speed sensor

DTC Confirmation Procedure

INFOID:0000000001703302

CAUTION:
- **Always drive vehicle at a safe speed.**
- **If performing this “DTC Confirmation Procedure” again, always turn ignition switch OFF and wait at least 10 seconds before continuing.**

After the repair, perform the following procedure to confirm the malfunction is eliminated.

WITH CONSULT-III

1. Turn ignition switch ON and select “DATA MONITOR” mode for “A/T” with CONSULT-III.
2. Touch “START”.
3. Start engine and accelerate vehicle from 0 to 25 km/h (0 to 16 MPH).
4. If the check result is NG, go to AT-151, "Diagnosis Procedure" .

WITHOUT CONSULT-III

1. Start engine.
2. Drive vehicle under the following conditions:
   Selector lever position: “D” position
   Vehicle speed: Higher than 25 km/h (16 MPH)
3. Perform self-diagnosis. Refer to AT-78, "Diagnosis Procedure without CONSULT-III" .
4. If the check result is NG, go to AT-151, "Diagnosis Procedure" .

Wiring Diagram - AT - VSSMTR

INFOID:0000000001703303

AT-VSSMTR-01

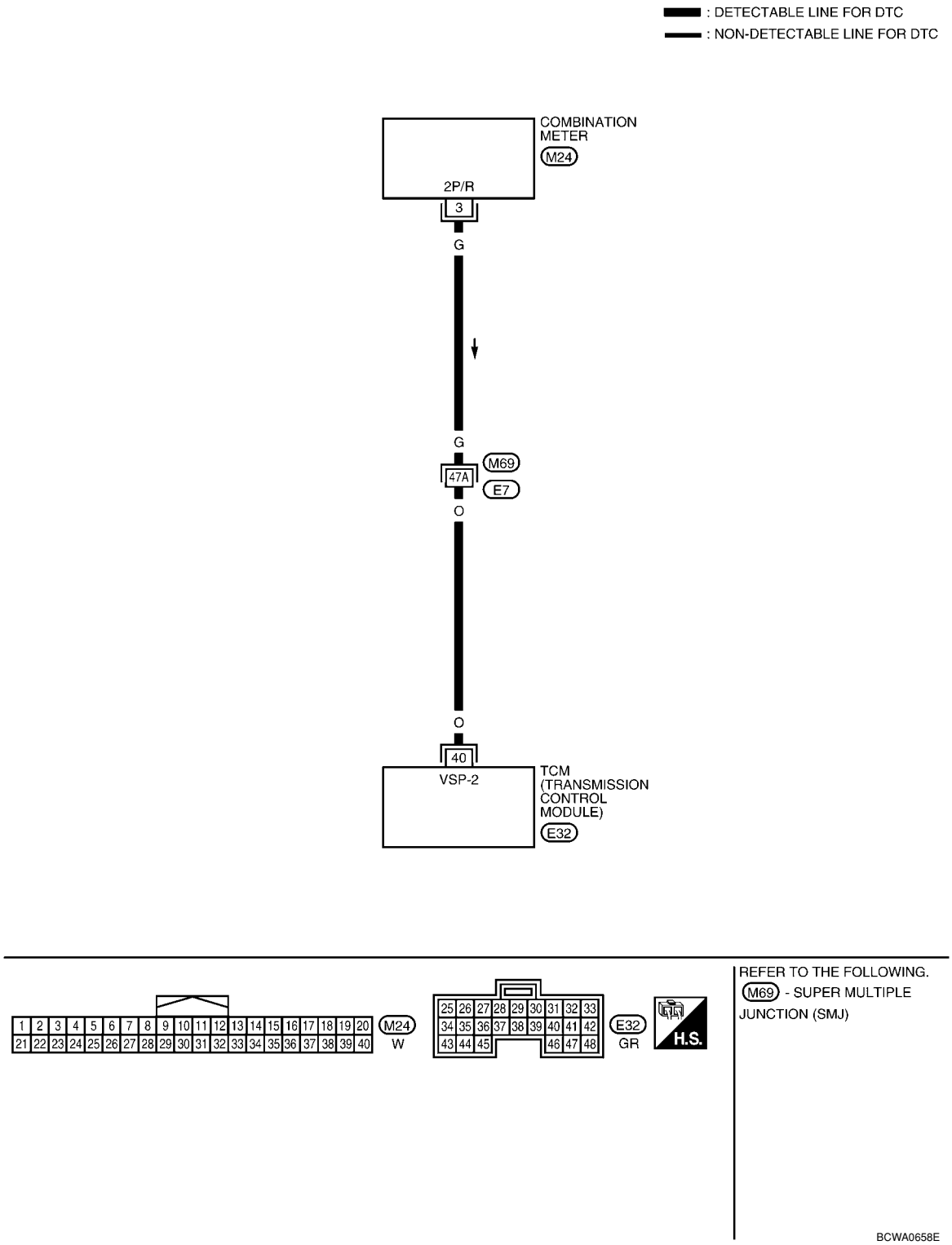

TCM TERMINALS AND REFERENCE VALUES

Refer to AT-71, "TCM Terminal and Reference Value".

Diagnosis Procedure

INFOID:0000000001703304

1. CHECK INPUT SIGNAL

With CONSULT-III

1. Start engine.
2. Select “TCM INPUT SIGNALS” in “DATA MONITOR” mode for “A/T” with CONSULT-III.
3. Read out the value of “VHCL/S SE-MTR” while driving. Check the value changes according to driving speed.

Item name	Condition	Display value
VHCL/S SE-MTR	During driving	Approximately matches the speedometer reading.

Without CONSULT-III

1. Start engine.
2. Check voltage between TCM connector terminal and ground.

Item	Connector	Terminal	Condition	Judgement standard (Approx.)
Vehicle speed sensor	E32	40 - Ground	When driving vehicle at 2 to 3 km/h (1 to 2 MPH) for 1 m (3 ft) or more.	Voltage varies between less than 0 V and more than 4.5 V

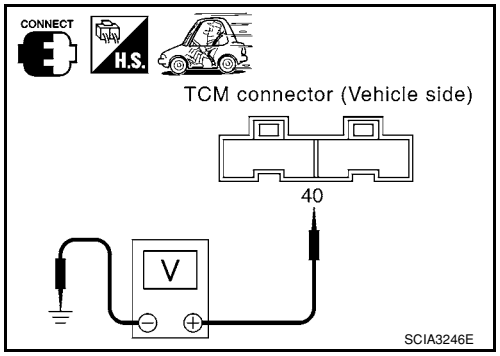

OK or NG

OK >> GO TO 3.
NG >> GO TO 2.

2. DETECT MALFUNCTIONING ITEM

Check the following items:

- Combination meter. Refer to DI-4 .
- Harness for short or open between TCM and combination meter.

OK or NG

OK >> GO TO 3.
NG >> Repair or replace damaged parts.

3. CHECK DTC

Perform AT-149, "DTC Confirmation Procedure" .

OK or NG

OK >> **INSPECTION END**
NG >> GO TO 4.

4. CHECK TCM

1. Check TCM input/output signal. Refer to AT-71, "TCM Terminal and Reference Value" .
2. If NG, recheck TCM pin terminals for damage or loose connection with harness connector.

OK or NG

OK >> **INSPECTION END**
NG >> Repair or replace damaged parts.

DTC BATT/FLUID TEMP SEN (A/T FLUID TEMP SENSOR CIRCUIT AND TCM POWER SOURCE)

Description

INFOID:0000000001703305

The A/T fluid temperature sensor detects the A/T fluid temperature and sends a signal to the TCM.

CONSULT-III Reference Value in Data Monitor Mode

INFOID:0000000001703306

Remarks: Specification data are reference values.

Item name	Condition	Display value
FLUID TEMP SE	When A/T fluid temperature is 20°C (68°F).	1.5 V
	When A/T fluid temperature is 80°C (176°F).	0.5 V

On Board Diagnosis Logic

INFOID:0000000001703307

- This is not an OBD-II self-diagnostic item.
- Diagnostic trouble code “BATT/FLUID TEMP SEN” with CONSULT-III or 8th judgement flicker without CONSULT-III is detected when TCM receives an excessively low or high voltage from the sensor.

Possible Cause

INFOID:0000000001703308

- Harness or connector
  (The sensor circuit is open or shorted.)
- A/T fluid temperature sensor

DTC Confirmation Procedure

INFOID:0000000001703309

CAUTION:
- **Always drive vehicle at a safe speed.**
- **If performing this “DTC Confirmation Procedure” again, always turn ignition switch OFF and wait at least 10 seconds before continuing.**

After the repair, perform the following procedure to confirm the malfunction is eliminated.

WITH CONSULT-III

1. Start engine.
2. Select “DATA MONITOR” mode for “A/T” with CONSULT-III.
3. Touch “START”.
4. Drive vehicle under the following conditions.
   SLCT LVR POSI: “D” position
   VEHICLE SPEED: Higher than 20 km/h (12 MPH)
5. If the check result is NG, go to AT-154, "Diagnosis Procedure" .

WITHOUT CONSULT-III

1. Start engine.
2. Drive vehicle under the following conditions.
   Selector lever position: D position
   Vehicle speed: higher than 20 km/h (12 MPH)
3. Perform self-diagnosis. Refer to AT-78, "Diagnosis Procedure without CONSULT-III" .
4. If the check result is NG, go to AT-154, "Diagnosis Procedure" .

Wiring Diagram - AT - BA/FTS

INFOID:0000000001703310

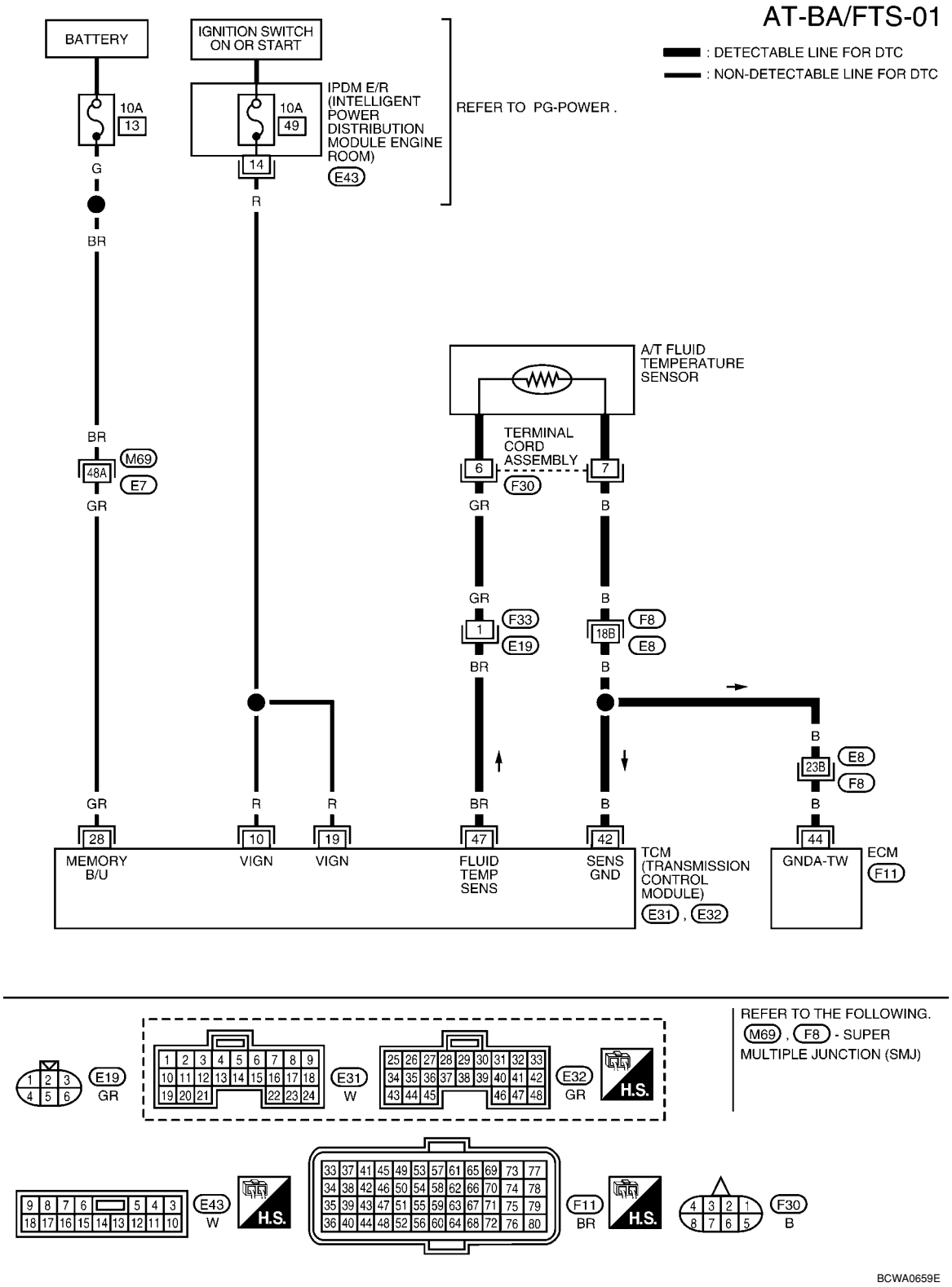

TCM TERMINALS AND REFERENCE VALUES

Refer to AT-71, "TCM Terminal and Reference Value".

Diagnosis Procedure

INFOID:0000000001703311

1. CHECK TCM POWER SOURCE

1. Turn ignition switch ON. (Do not start engine.)
2. Check voltage between TCM connector terminals and ground.

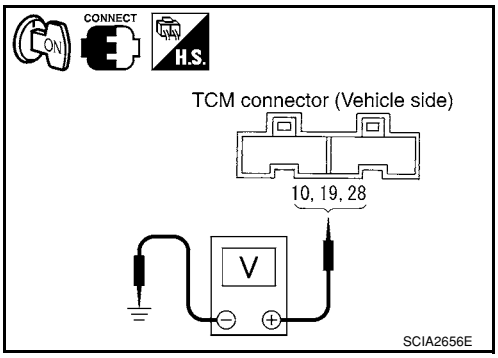

Item	Connector	Terminal	Judgement standard (Approx.)
Power supply	E31	10	Battery voltage
		19	Battery voltage
Power supply (memory back-up)	E32	28	Battery voltage

3. Turn ignition switch OFF.
4. Check voltage between TCM connector terminals and ground.

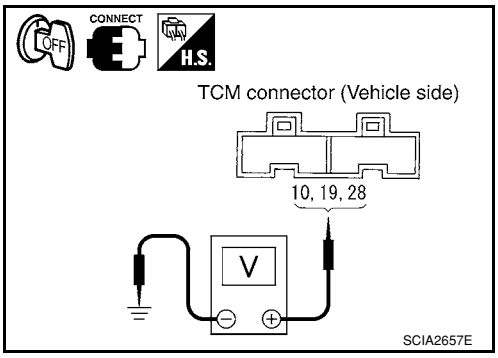

Item	Connector	Terminal	Judgement standard (Approx.)
Power supply	E31	10	0 V
		19	0 V
Power supply (memory back-up)	E32	28	Battery voltage

OK or NG

OK >> GO TO 3.
NG >> GO TO 2.

2. DETECT MALFUNCTIONING ITEM

Check the following items:
- Harness for short or open between ignition switch and TCM terminals 10, 19
- Harness for short or open between battery and TCM terminal 28
- 10A fuse (No.13, located in the fuse block) and 10A fuse (No.49, located in the IPDM E/R)
- Ignition switch. Refer to PG-3 .

OK or NG

OK >> GO TO 9.
NG >> Repair or replace damaged parts.

3. CHECK INPUT SIGNAL OF A/T FLUID TEMPERATURE SENSOR

With CONSULT-III

1. Start engine.
2. Select “TCM INPUT SIGNALS” in “DATA MONITOR” mode for “A/T” with CONSULT-III.
3. Read out the value of “FLUID TEMP SE”.

Item name	Condition	Display value
FLUID TEMP SE	When A/T fluid temperature is 20°C (68°F).	1.5 V
	When A/T fluid temperature is 80°C (176°F).	0.5 V

Without CONSULT-III

1. Start engine.

2. Check voltage TCM connector terminals while warming up A/T.

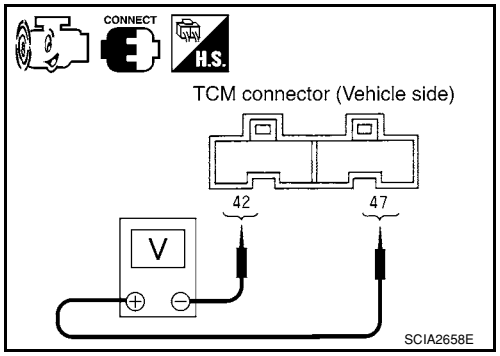

Item	Connector	Terminal	Condition	Judgement standard (Approx.)
A/T fluid temperature sensor	E32	47 - 42	When A/T fluid temperature is 20°C (68°F).	1.5 V
			When A/T fluid temperature is 80°C (176°F).	0.5 V

OK or NG

OK >> GO TO 9.
NG >> GO TO 4.

4. DETECT MALFUNCTIONING ITEM

Check the following items:
- Harness for short or open between TCM, ECM and terminal cord assembly
- Ground circuit for ECM
  Refer to EC-137 .

OK or NG

OK >> GO TO 5.
NG >> Repair or replace damaged parts.

5. CHECK FLUID TEMPERATURE SENSOR CIRCUIT

1. Turn ignition switch OFF.
2. Disconnect the TCM connector.
3. Check resistance between terminals.

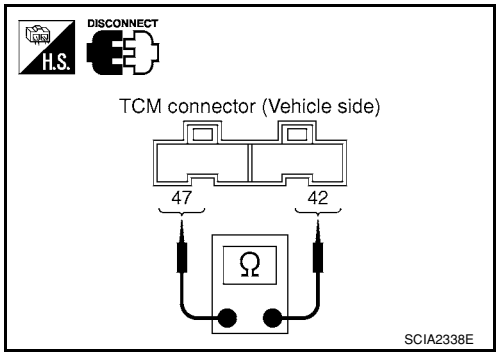

Item	Connector	Terminal	Temperature °C (°F)	Resistance (Approx.)
A/T fluid temperature sensor	E32	47 - 42	20 (68)	2.5 kΩ
			80 (176)	0.3 kΩ

OK or NG

OK >> GO TO 9.
NG >> GO TO 6.

6. CHECK HARNESS BETWEEN TCM AND TERMINAL CORD ASSEMBLY HARNESS CONNECTOR

1. Turn ignition switch OFF.
2. Disconnect terminal cord assembly harness connector and TCM connector.
3. Check continuity between terminal cord assembly harness connector terminal and TCM connector terminal.

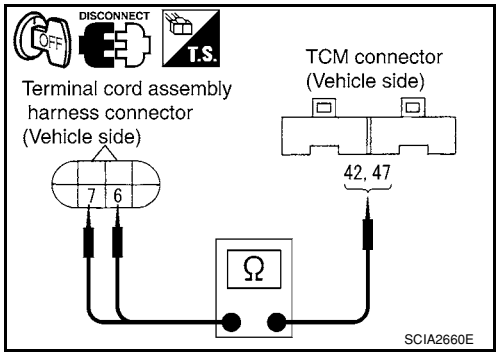

Item	Connector	Terminal	Continuity
TCM	E32	42	Yes
Terminal cord assembly harness connector	F30	7	
TCM	E32	47	Yes
Terminal cord assembly harness connector	F30	6	

4. If OK, check harness for short to ground and short to power.
5. If OK, check continuity between ground and transaxle assembly.
6. Reinstall any part removed.

OK or NG

OK >> GO TO 7.
NG >> Repair open circuit or short to ground or short to power in harness or connectors.

7. CHECK A/T FLUID TEMPERATURE SENSOR WITH TERMINAL CORD ASSEMBLY

1. Turn ignition switch OFF.
2. Disconnect terminal cord assembly connector in engine room.
3. Check resistance between terminal cord assembly terminals.

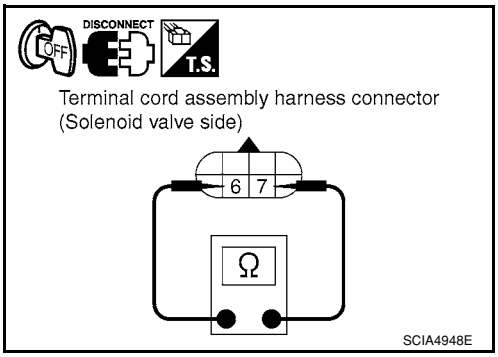

Item	Connector	Terminal	Temperature [°C (°F)]	Resistance (Approx.)
A/T fluid temperature sensor	F30	6 - 7	20 (68)	2.5 kΩ
			80 (176)	0.3 kΩ

4. Reinstall any part removed.

OK or NG

OK >> GO TO 8.
NG >> Repair or replace damaged parts.

8. DETECT MALFUNCTIONING ITEM

1. Remove oil pan. Refer to AT-216, "Control Valve Assembly and Accumulators" .
2. Check the following items:

- A/T fluid temperature sensor
- Check resistance between terminal cord assembly harness connector terminals while changing temperature as shown.

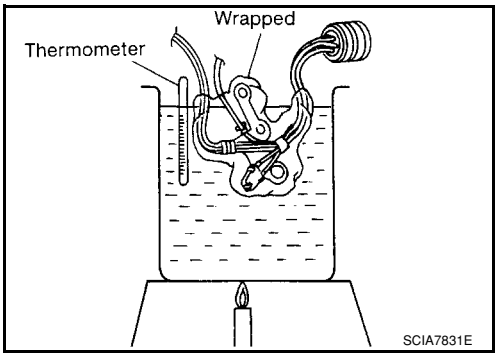

Item	Connector	Terminal	Temperature [°C (°F)]	Resistance (Approx.)
A/T fluid temperature sensor	F30	6 - 7	20 (68)	2.5 kΩ
			80 (176)	0.3 kΩ

- Harness of terminal cord assembly for short or open

OK or NG

OK >> GO TO 9.
NG >> Repair or replace damaged parts.

9. CHECK DTC

Perform AT-152, "DTC Confirmation Procedure" .

OK or NG

OK >> **INSPECTION END**
NG >> GO TO 10.

10. CHECK TCM

1. Check TCM input/output signal. Refer to AT-71, "TCM Terminal and Reference Value" .
2. If NG, recheck TCM pin terminals for damage or loose connection with harness connector.

OK or NG

OK >> **INSPECTION END**
NG >> Repair or replace damaged parts.

Component Inspection

INFOID:0000000001703312

A/T FLUID TEMPERATURE SENSOR

- Remove oil pan. Refer to AT-216, "Control Valve Assembly and Accumulators" .
- Check resistance between terminal cord assembly harness connector terminals while changing temperature as shown.

Item	Connector	Terminal	Temperature [°C (°F)]	Resistance (Approx.)
A/T fluid temperature sensor	F30	6 - 7	20 (68)	2.5 kΩ
			80 (176)	0.3 kΩ

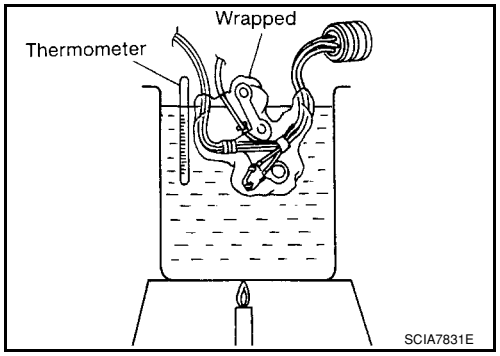

DTC TURBINE REVOLUTION SENSOR

Description

INFOID:0000000001703313

The turbine revolution sensor (power train revolution sensor) detects forward clutch drum rpm (revolutions per minute). It is located on the input side of the automatic transaxle. The vehicle speed sensor A/T (Revolution sensor) is located on the output side of the automatic transaxle. With the two sensors, input and output rpms are accurately detected. As a result, optimal shift timing during deceleration and shift quality can be improved.

CONSULT-III Reference Value in Data Monitor Mode

INFOID:0000000001703314

Remarks: Specification data are reference values.

Item name	Condition	Display value
TURBINE REV	During driving (lock-up ON)	Approximately matches the engine speed.

On Board Diagnosis Logic

INFOID:0000000001703315

- This is not an OBD-II self-diagnostic item.
- Diagnostic trouble code “TURBINE SENSOR” with CONSULT-III or 10th judgement flicker without CONSULT-III is detected when TCM does not receive the proper voltage signal from the sensor.

Possible Cause

INFOID:0000000001703316

- Harness or connector
  (The sensor circuit is open or shorted.)
- Turbine revolution sensor (power train revolution sensor)

DTC Confirmation Procedure

INFOID:0000000001703317

CAUTION:
- **Always drive vehicle at a safe speed.**
- **Be careful not to rev engine into the red zone on the tachometer.**
- **If performing this “DTC Confirmation Procedure” again, always turn ignition switch OFF and wait at least 10 seconds before continuing.**

After the repair, perform the following procedure to confirm the malfunction is eliminated.

WITH CONSULT-III

1. Start engine.
2. Select “DATA MONITOR” mode for “A/T” with CONSULT-III.
3. Touch “START”.
4. Drive vehicle under the following conditions for more than 5 seconds.
   SLCT LVR POSI: “D” position
   VEHICLE SPEED: Higher than 40 km/h (25 MPH)
   ENGINE SPEED: Higher than 1,500 rpm
   THROTTLE POSI: Greater than 1.0/8 of the full throttle position
5. If the check result is NG, go to AT-160, "Diagnosis Procedure" .

WITHOUT CONSULT-III

1. Start engine.
2. Drive vehicle under the following conditions for more than 5 seconds.
   Selector lever position: “D” position
   Vehicle speed: Higher than 40 km/h (25 MPH)
   Engine speed: Higher than 1,500 rpm
   Throttle position: 1.0/8 of the full throttle position
3. Perform self-diagnosis. Refer to AT-78, "Diagnosis Procedure without CONSULT-III" .
4. If the check result is NG, go to AT-160, "Diagnosis Procedure" .

Wiring Diagram - AT - PT/SEN

INFOID:0000000001703318

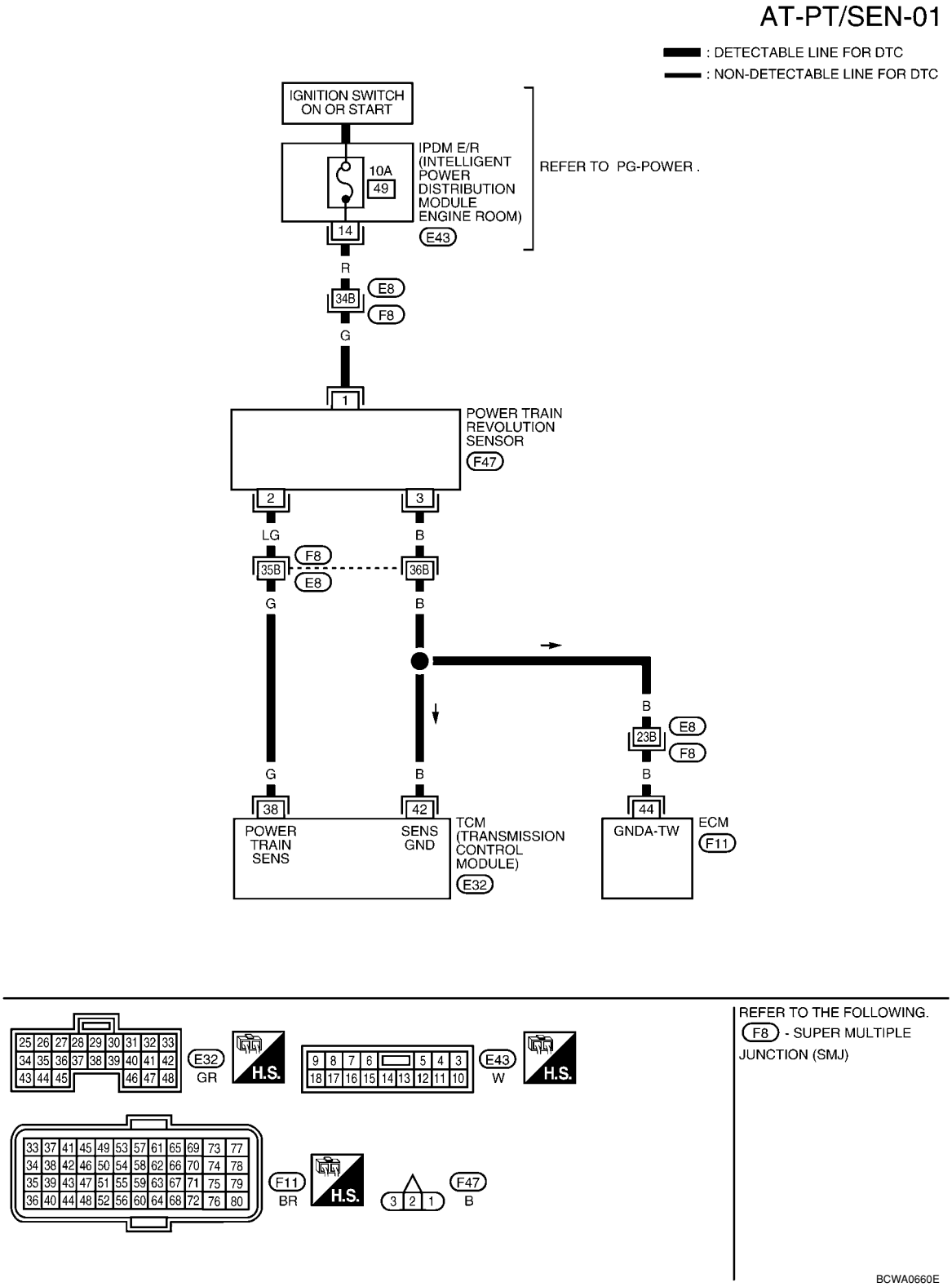

TCM TERMINALS AND REFERENCE VALUES

Refer to AT-71, "TCM Terminal and Reference Value".

Diagnosis Procedure

INFOID:0000000001703319

1. CHECK INPUT SIGNAL

With CONSULT-III

1. Start engine.
2. Select “TCM INPUT SIGNALS” in “DATA MONITOR” mode for “A/T” with CONSULT-III.
3. Read out the value of “TURBINE REV” while driving. Check the value changes according to driving speed.

Item name	Condition	Display value
TURBINE REV	During driving (lock-up ON)	Approximately matches the engine speed.

OK or NG

OK >> GO TO 8.
NG >> GO TO 2.

2. CHECK TURBINE REVOLUTION SENSOR (POWER TRAIN REVOLUTION SENSOR)

With CONSULT-III

1. Start engine.
2. Check power supply to turbine revolution sensor (power train revolution sensor) by voltage between TCM connector terminals. Refer to AT-164, "Wiring Diagram - AT - MAIN" and AT-159, "Wiring Diagram - AT - PT/SEN" .

Item	Connector	Terminal	Judgement standard (Approx.)
TCM	E31, E32	10 - 42	Battery voltage
		19 - 42	

3. If OK, check the pulse when vehicle cruises.

Name	Condition
Turbine revolution sensor (power train revolution sensor)	When driving at 20 km/h (12 MPH), use the CONSULT-III pulse frequency measuring function.*1 **CAUTION:** **Connect the diagnosis data link cable to the vehicle diagnosis connector.** *1: A circuit tester cannot be used to test this item.

Item	Connector	Terminal	Name	Judgement standard (Approx.)
TCM	E32	38	Turbine revolution sensor (power train revolution sensor)	360 Hz

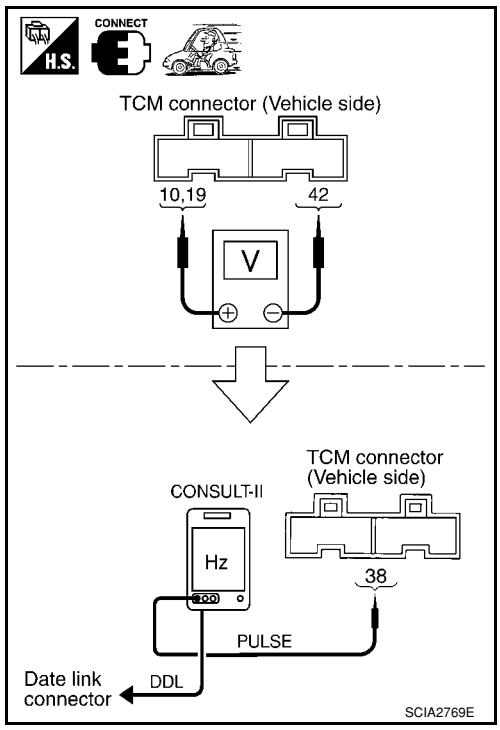

OK or NG

OK >> GO TO 8.
NG >> GO TO 3.

3. CHECK POWER AND SENSOR GROUND

1. Turn ignition switch OFF.
2. Disconnect the turbine revolution sensor (power train revolution sensor) harness connector.
3. Turn ignition switch ON.

4. Check voltage between turbine revolution sensor (power train revolution sensor) harness connector terminals.

Item	Connector	Terminal	Judgement standard (Approx.)
Turbine revolution sensor (power train revolution sensor)	F47	1 - 3	Battery voltage

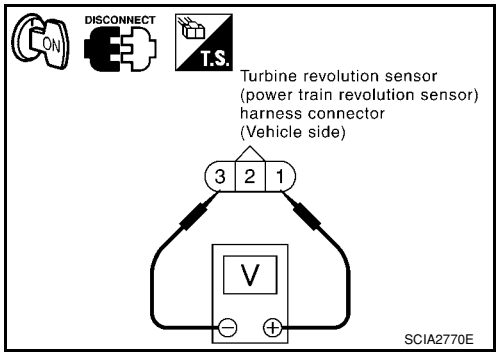

5. Check voltage between turbine revolution sensor (power train revolution sensor) harness connector terminal and ground.

Item	Connector	Terminal	Judgement standard (Approx.)
Turbine revolution sensor (power train revolution sensor)	F47	1 - ground	Battery voltage

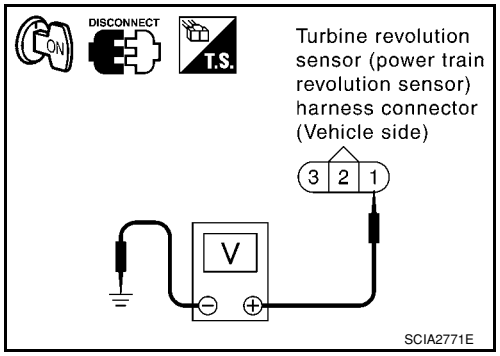

6. If OK, check harness for short to ground and short to power.
7. Reinstall any part removed.

OK or NG

OK >> GO TO 4.
NG - 1 >> Battery voltage is not supplied between terminals 1 and 3, terminals 1 and ground: GO TO 6.
NG - 2 >> Battery voltage is not supplied between terminals 1 and 3 only: GO TO 7.

4. CHECK HARNESS BETWEEN TCM AND TURBINE REVOLUTION SENSOR (POWER TRAIN REVOLUTION SENSOR)

1. Turn ignition switch OFF.
2. Disconnect the turbine revolution sensor (power train revolution sensor) harness connector.
3. Check continuity between TCM connector terminal and turbine revolution sensor (power train revolution sensor) harness connector terminal.

Item	Connector	Terminal	Continuity
TCM	E32	38	Yes
Turbine revolution sensor (power train revolution sensor)	F47	2	

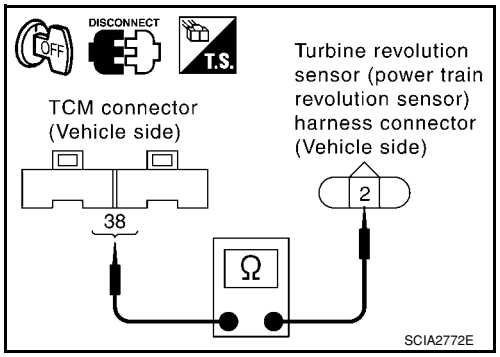

4. If OK, check harness for short to ground and short to power.
5. Reinstall any part removed.

OK or NG

OK >> GO TO 5.
NG >> Repair open circuit or short to ground or short to power in harness or connectors.

5. CHECK TCM

1. Check TCM input/output signal. Refer to AT-71, "TCM Terminal and Reference Value" .
2. If NG, re-check TCM pin terminals for damage or loose connection with harness connector.

OK or NG

OK >> GO TO 8.
NG >> Repair or replace damaged parts.

6. CHECK HARNESS BETWEEN TCM AND TURBINE REVOLUTION SENSOR [(POWER TRAIN REVOLUTION SENSOR) POWER]

1. Turn ignition switch OFF.
2. Disconnect the turbine revolution sensor (power train revolution sensor) harness connector.

3. Check continuity between TCM connector terminals and turbine revolution sensor (power train revolution sensor) harness connector terminal. Refer to AT-47, "Circuit Diagram" and AT-164, "Wiring Diagram - AT - MAIN" .

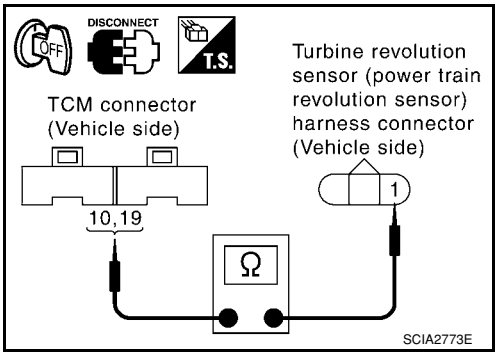

Item	Connector	Terminal	Continuity
TCM	E31	10	Yes
Turbine revolution sensor (power train revolution sensor)	F47	1	
TCM	E31	19	Yes
Turbine revolution sensor (power train revolution sensor)	F47	1	

4. If OK, check harness for short to ground and short to power.
5. Reinstall any part removed.

OK or NG

OK >> 10A fuse (No.49, located in the IPDM E/R) or ignition switch are malfunctioning.
NG >> Repair open circuit or short to ground or short to power in harness or connectors.

7. CHECK HARNESS BETWEEN TCM AND TURBINE REVOLUTION [(POWER TRAIN REVOLUTION SENSOR) SENSOR GROUND]

1. Turn ignition switch OFF.
2. Disconnect the turbine revolution sensor (power train revolution sensor) harness connector.
3. Check continuity between TCM connector terminal and turbine revolution sensor (power train revolution sensor) harness connector terminal.

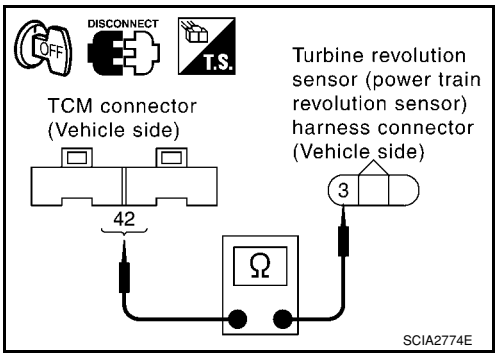

Item	Connector	Terminal	Continuity
TCM	E32	42	Yes
Turbine revolution sensor (power train revolution sensor)	F47	3	

4. If OK, check harness for short to ground and short to power.
5. Reinstall any part removed.

OK or NG

OK >> GO TO 5.
NG >> Repair open circuit or short to ground or short to power in harness or connectors.

8. CHECK DTC

Perform AT-158, "DTC Confirmation Procedure" .

OK or NG

OK >> **INSPECTION END**
NG >> GO TO 5.

CONTROL UNIT (RAM), CONTROL UNIT (ROM)

Description

INFOID:0000000001703320

The TCM consists of a microcomputer and connectors for signal input and output and for power supply. The unit controls the A/T.

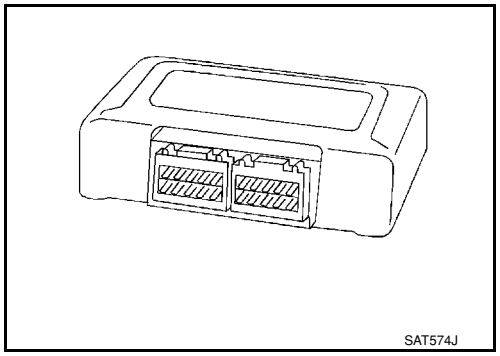

On Board Diagnosis Logic

INFOID:0000000001703321

- This is not an OBD-II self-diagnostic item.
- Diagnostic trouble code “CONTROL UNIT (RAM)”, “CONTROL UNIT (ROM)” with CONSULT-III is detected when TCM memory (RAM) or (ROM) is malfunctioning.

Possible Cause

INFOID:0000000001703322

TCM.

DTC Confirmation Procedure

INFOID:0000000001703323

CAUTION:
If performing this “DTC Confirmation Procedure” again, always turn ignition switch OFF and wait at least 10 seconds before continuing.
After the repair, perform the following procedure to confirm the malfunction is eliminated.

WITH CONSULT-III

1. Turn ignition switch ON and select “DATA MONITOR” mode for A/T with CONSULT-III.
2. Touch “START”.
3. Start engine.
4. Run engine for at least 2 seconds at idle speed.
5. If the check result is NG, go to AT-163, "Diagnosis Procedure".

Diagnosis Procedure

INFOID:0000000001703324

1.CHECK DTC

With CONSULT-III

1. Turn ignition switch ON and select “SELF-DIAG RESULTS” mode for A/T with CONSULT-III.
2. Touch “ERASE”.
3. Perform AT-163, "DTC Confirmation Procedure".

Is the “CONTROL UNIT (RAM)” or “CONTROL UNIT (ROM)” displayed again?

YES >> Replace TCM. Refer to AT-202, "Removal and Installation".
NO >> **INSPECTION END**

MAIN POWER SUPPLY AND GROUND CIRCUIT

Wiring Diagram - AT - MAIN

INFOID:0000000001703325

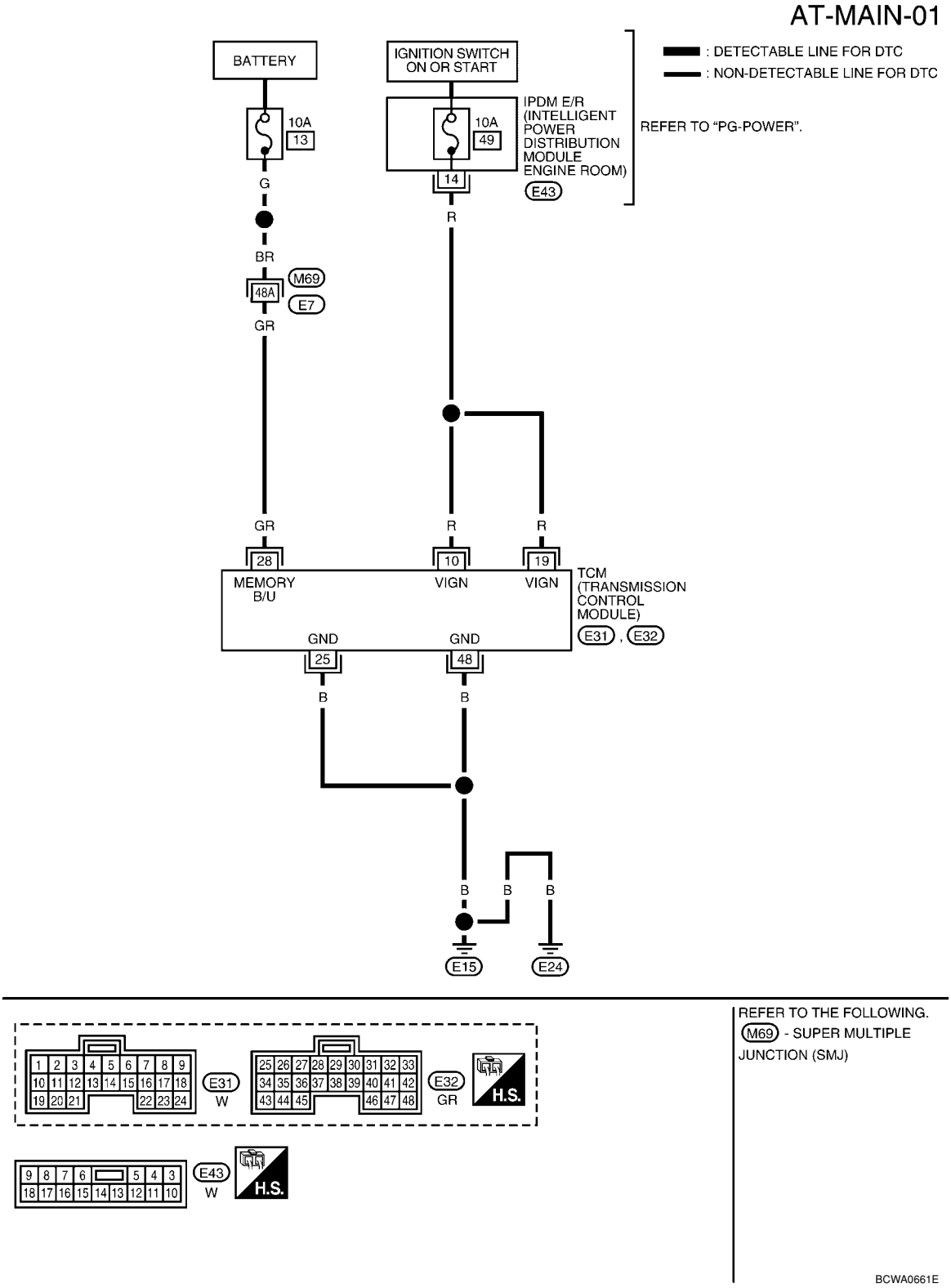

TCM TERMINALS AND REFERENCE VALUES

Refer to AT-71, "TCM Terminal and Reference Value" .

Diagnosis Procedure

INFOID:0000000001703326

1. CHECK TCM POWER SOURCE

1. Turn ignition switch ON. (Do not start engine.)
2. Check voltage between TCM connector terminals and ground.

Item	Connector	Terminal	Judgement standard (Approx.)
Power supply	E31	10	Battery voltage
		19	Battery voltage
Power supply (memory back-up)	E32	28	Battery voltage

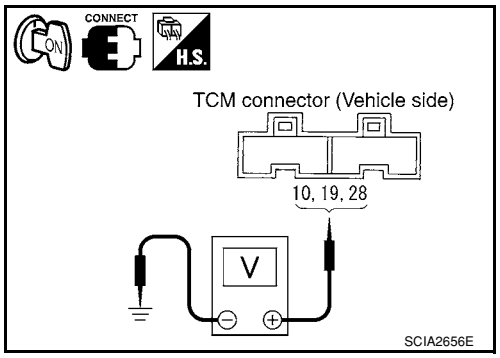

3. Turn ignition switch OFF.
4. Check voltage between TCM connector terminals and ground.

Item	Connector	Terminal	Judgement standard (Approx.)
Power supply	E31	10	0 V
		19	0 V
Power supply (memory back-up)	E32	28	Battery voltage

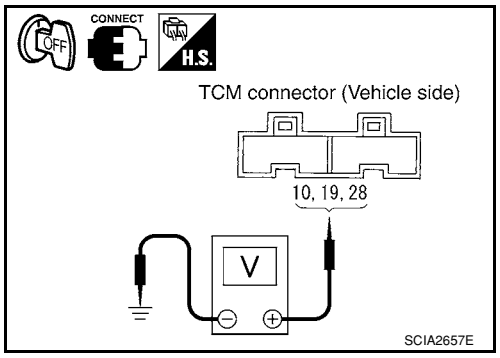

OK or NG

OK >> GO TO 3.
NG >> GO TO 2.

2. DETECT MALFUNCTIONING ITEM

Check the following items:
- Harness for short or open between ignition switch and TCM terminals 10, 19
- Harness for short or open between battery and TCM terminal 28
- 10A fuse (No.13, located in the fuse block) and 10A fuse (No.49, located in the IPDM E/R)
- Ignition switch. Refer to PG-3 .

OK or NG

OK >> GO TO 3.
NG >> Repair or replace damaged parts.

3. CHECK TCM GROUND CIRCUIT

1. Turn ignition switch OFF.
2. Check continuity between TCM connector terminals and ground.

Item	Connector	Terminal	Continuity
Ground	E32	25, 48 - Ground	Yes

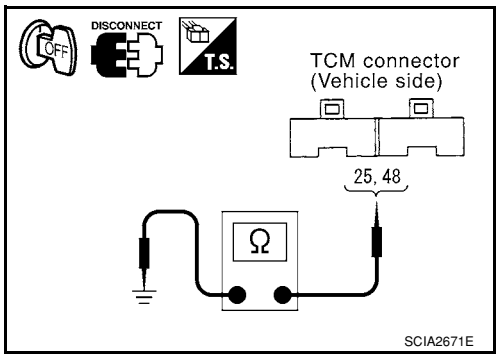

OK or NG

OK >> GO TO 4.
NG >> Repair open circuit or short to ground or short to power in harness or connectors.

4. CHECK SYMPTOM

Drive for a while to check that there is no malfunction.

OK or NG

OK >> **INSPECTION END**
NG >> GO TO 5.

5. CHECK TCM

1. Check TCM input/output signal. Refer to AT-71, "TCM Terminal and Reference Value" .
2. If NG, recheck TCM pin terminals for damage or loose connection with harness connector.

OK or NG

OK >> **INSPECTION END**
NG >> Repair or replace damaged parts.

PNP, OD SWITCH AND CLOSED THROTTLE, WIDE OPEN THROTTLE POSITION SIGNAL CIRCUIT

CONSULT-III Reference Value in Data Monitor Mode

INFOID:0000000001703327

Item name	Condition	Display value
PN POSI SW	When setting selector lever to “N” or “P” position.	ON
	When setting selector lever to other positions.	OFF
R POSITION SW	When setting selector lever to “R” position.	ON
	When setting selector lever to other positions.	OFF
D POSITION SW	When setting selector lever to “D” position.	ON
	When setting selector lever to other positions.	OFF
2 POSITION SW	When setting selector lever to “2” position.	ON
	When setting selector lever to other positions.	OFF
1 POSITION SW	When setting selector lever to “1” position.	ON
	When setting selector lever to other positions.	OFF
OVERDRIVE SW	When overdrive control switch is depressed.	ON
	When overdrive control switch is released.	OFF
CLOSED THL/SW	Released accelerator pedal.	ON
	Depressed accelerator pedal.	OFF
W/O THRL/P-SW	Fully depressed accelerator pedal.	ON
	Released accelerator pedal.	OFF

TCM Terminal and Reference Value

INFOID:0000000001703328

TCM terminal data are reference values, measured between each terminal and ground.

Terminal	Wire color	Item	Condition		Judgement standard (Approx.)
26	Y	PNP switch “1” position	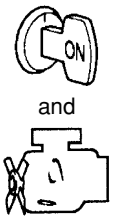	When setting selector lever to “1” position.	Battery voltage
				When setting selector lever to other positions.	0 V
27	G	PNP switch “2” position		When setting selector lever to “2” position.	Battery voltage
				When setting selector lever to other positions.	0 V
34	LG	PNP switch “D” position		When setting selector lever to “D” position.	Battery voltage
				When setting selector lever to other positions.	0 V
35	SB	PNP switch “R” position		When setting selector lever to “R” position.	Battery voltage
				When setting selector lever to other positions.	0 V
36	R	PNP switch “N” or “P” position		When setting selector lever to “N” or “P” positions.	Battery voltage
				When setting selector lever to other positions.	0 V

Diagnosis Procedure

INFOID:0000000001703329

1.CHECK CAN COMMUNICATION LINE

Perform self-diagnosis. Refer to AT-73, "CONSULT-III Function (A/T)".

Is a malfunction in the CAN communication indicated in the results?

YES >> Check CAN communication line. Refer to AT-83.
NO (With CONSULT-III) >>GO TO 2.
NO (Without CONSULT-III) >>GO TO 3.

2. CHECK PNP SWITCH CIRCUIT

With CONSULT-III

1. Turn ignition switch ON. (Do not start engine.)
2. Select “TCM INPUT SIGNALS” in “DATA MONITOR” mode for “A/T” with CONSULT-III.
3. Read out “P·N”, “R”, “D”, “2” and “1” position switches moving selector lever to each position.

Item name	Condition	Display value
PN POSI SW	When setting selector lever to “N” or “P” position.	ON
	When setting selector lever to other positions.	OFF
R POSITION SW	When setting selector lever to “R” position.	ON
	When setting selector lever to other positions.	OFF
D POSITION SW	When setting selector lever to “D” positions.	ON
	When setting selector lever to other positions.	OFF
2 POSITION SW	When setting selector lever to “2” position.	ON
	When setting selector lever to other positions.	OFF
1 POSITION SW	When setting selector lever to “1” position.	ON
	When setting selector lever to other positions.	OFF

OK or NG

OK >> GO TO 4.
NG >> Check PNP switch circuit. Refer to AT-86.

3. CHECK PNP SWITCH CIRCUIT

Without CONSULT-III

1. Turn ignition switch ON. (Do not start engine.)
2. Check voltage between TCM connector terminals and ground while moving selector lever through each position. Refer to AT-87, "Wiring Diagram - AT - PNP/SW".

Selector lever position	Terminal				
	36	35	34	27	26
“P”, “N”	B	0	0	0	0
“R”	0	B	0	0	0
“D”	0	0	B	0	0
“2”	0	0	0	B	0
“1”	0	0	0	0	B

B: Battery voltage

0: 0V

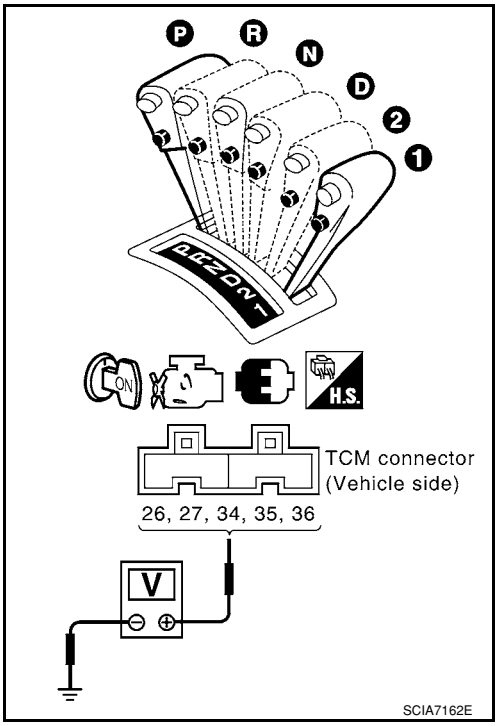

OK or NG

OK >> GO TO 4.
NG >> Check PNP switch circuit. Refer to AT-86.

4. CHECK PNP SWITCH

1. Turn ignition switch OFF.
2. Disconnect PNP switch harness connector.
3. Check continuity between PNP switch harness connector terminals.

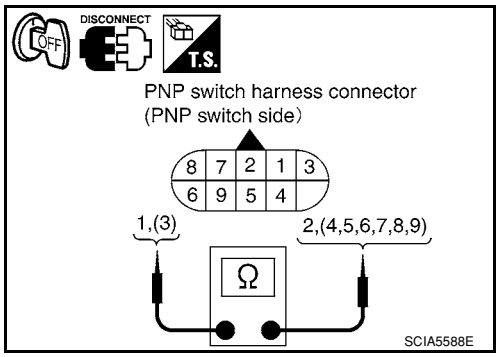

Selector lever position	Connector	Terminal	Continuity
"P"	F25	1 - 2, 3 - 7	Yes *Continuity should not exist in positions other than the specified positions.
"R"		3 - 8	
"N"		1 - 2, 3 - 9	
"D"		3 - 6	
"2"		3 - 5	
"1"		3 - 4	

OK or NG

OK >> GO TO 6.
NG >> GO TO 5.

5. CHECK CONTROL CABLE ADJUSTMENT

Check PNP switch again with control cable disconnected from manual shaft of A/T assembly. Refer to test group 4.

OK or NG

OK >> Adjust control cable. Refer to AT-207, "Adjustment of A/T Position".
NG >> Check PNP switch (Refer to test group 1) again after adjusting PNP switch (Refer to AT-219).
- If OK, **INSPECTION END**
- If NG, repair or replace PNP switch. Refer to AT-219, "Park/Neutral Position (PNP) Switch".

6. DETECT MALFUNCTIONING ITEM

Check the following.
- Harness for short or open between ignition switch and PNP switch
- Harness for short or open between PNP switch and TCM
- Harness for short or open between PNP switch and combination meter
- Harness for short or open between combination meter and TCM
- 10A fuse (No.51, located in the IPDM E/R)
- Combination meter. Refer to DI-4.
- Ignition switch. Refer to PG-3.

OK or NG

OK >> GO TO 7.
NG >> Repair or replace damaged parts.

7. CHECK OVERDRIVE CONTROL SWITCH CIRCUIT

With CONSULT-III

1. Turn ignition switch ON. (Do not start engine.)
2. Select "TCM INPUT SIGNALS" in "DATA MONITOR" mode for "A/T" with CONSULT-III.
3. Read out "OVERDRIVE SW". Check the signal of overdrive control switch is indicated properly.

Item name	Overdrive control switch Condition	Display value
OVERDRIVE SW	Depressed	ON
	Released	OFF

Without CONSULT-III

1. Turn ignition switch ON. (Do not start engine.)

2. Check voltage between A/T device harness connector terminal and ground. Refer to AT-173, "Wiring Diagram - AT - NONDTC".

Item	Connector	Terminal	Overdrive control switch Condition	Judgement standard (Approx.)
A/T device harness connector (Overdrive control switch)	M38	1 - Ground	Released	Battery voltage
			Depressed	0 V

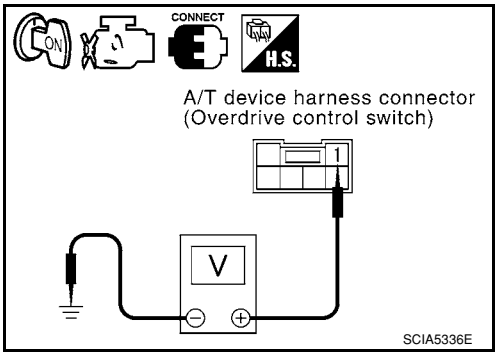

OK or NG

OK >> GO TO 10.
NG >> GO TO 8.

8. CHECK OVERDRIVE CONTROL SWITCH

1. Turn ignition switch OFF.
2. Disconnect A/T device harness connector.
3. Check continuity between A/T device harness connector terminals. Refer to AT-173, "Wiring Diagram - AT - NONDTC".

Item	Connector	Terminal	Overdrive control switch condition	Continuity
A/T device harness connector (Overdrive control switch)	M38	1 - 2	Released	No
			Depressed	Yes

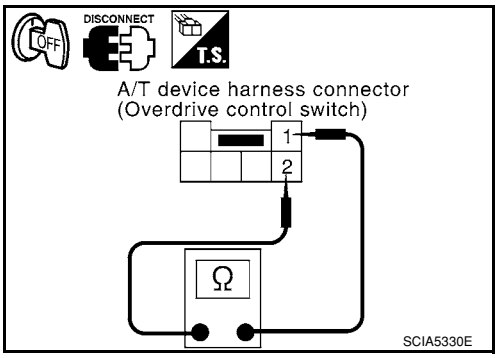

OK or NG

OK >> GO TO 9.
NG >> Repair or replace damaged parts.

9. DETECT MALFUNCTIONING ITEM

Check the following.
- Harness for short or open between combination meter and A/T device harness connector
- Harness for short or open between A/T device harness connector and ground
- Combination meter. Refer to DI-4.

OK or NG

OK >> GO TO 10.
NG >> Repair or replace damaged parts.

10. CHECK CLOSED THROTTLE POSITION AND WIDE OPEN THROTTLE POSITION SIGNAL CIRCUIT

With CONSULT-III

1. Turn ignition switch ON. (Do not start engine.)
2. Select “TCM INPUT SIGNALS” in “DATA MONITOR” mode for A/T with CONSULT-III.
3. Read out “CLOSED THL/SW” and “W/O THRL/P-SW” depressing and releasing accelerator pedal. Check that the signals of throttle position are indicated properly.

Accelerator pedal condition	Data monitor	
	CLOSED THL/SW	W/O THRL/P-SW
Released	ON	OFF
Fully depressed	OFF	ON

OK or NG

OK >> GO TO 11.
NG >> Check the following. If any items are damaged, repair or replace damaged parts.
- Accelerator pedal position sensor. Refer toEC-493.

11. PERFORM SELF-DIAGNOSIS

Without CONSULT-III

Perform self-diagnosis. Refer to AT-78, "Diagnosis Procedure without CONSULT-III".

OK or NG

OK >> **INSPECTION END**
NG – 1 >> Self-diagnosis does not activate: GO TO 12.
NG – 2 >> DTC is displayed: Check the malfunctioning system. Refer to AT-78, "Diagnosis Procedure without CONSULT-III".

12. CHECK TCM

1. Check TCM input/output signal. Refer to AT-71, "TCM Terminal and Reference Value".
2. If NG, recheck TCM pin terminals for damage or loose connection with harness connector.

OK or NG

OK >> **INSPECTION END**
NG >> Repair or replace damaged parts.

Component Inspection

INFOID:0000000001703330

OVERDRIVE CONTROL SWITCH

- Check continuity between A/T device harness connector terminals.

Item	Connector	Terminal	Overdrive control switch condition	Continuity
A/T device harness connector (Overdrive control switch)	M38	1 - 2	Released	No
			Depressed	Yes

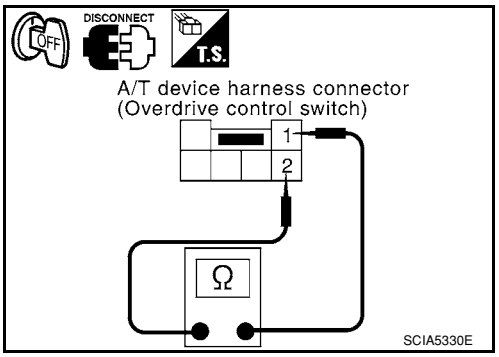

PNP SWITCH

1. Check continuity between PNP switch harness connector terminals.

Selector lever position	Connector	Terminal	Continuity
"P"	F25	1 - 2, 3 - 7	Yes *Continuity should not exist in positions other than the specified positions.
"R"		3 - 8	
"N"		1 - 2, 3 - 9	
"D"		3 - 6	
"2"		3 - 5	
"1"		3 - 4	

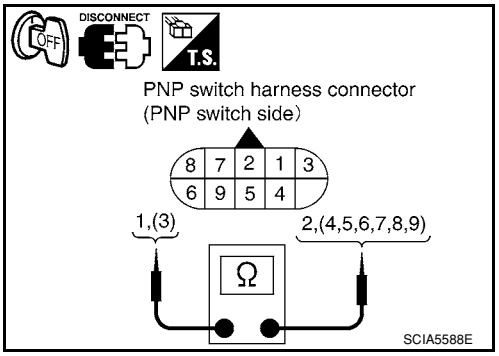

2. If NG, check again with control cable (2) disconnected from manual shaft (3) of A/T assembly. Refer to step 1.
   (1): Lock nut
3. If OK on step 2, adjust control cable (2). Refer to AT-207, "Adjustment of A/T Position".
4. If NG on step 2, remove PNP switch from A/T assembly and check continuity of PNP switch terminals. Refer to step 1.
5. If OK on step 4, adjust PNP switch. Refer to AT-219, "Park/Neutral Position (PNP) Switch".
6. If NG on step 4, replace PNP switch. Refer to AT-219, "Park/Neutral Position (PNP) Switch".

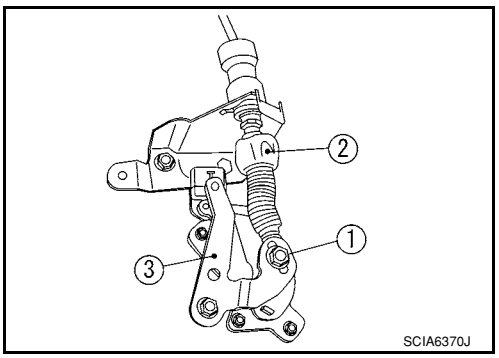

SHIFT POSITION INDICATOR CIRCUIT

Description

INFOID:0000000001703331

TCM sends the switch signals to combination meter via CAN communication line. Then selector lever position is indicated on the shift position indicator.

CONSULT-III Reference Value in Data Monitor Mode

INFOID:0000000001703332

Item name	Condition	Display value
SLCT LVR POSI	When setting selector lever to “N” or “P” positions.	N · P
	When setting selector lever to “R” position.	R
	When setting selector lever to “D” position.	D
	When setting selector lever to “2” position.	2
	When setting selector lever to “1” position.	1

Diagnosis Procedure

INFOID:0000000001703333

1.CHECK INPUT SIGNALS

With CONSULT-III

1. Start engine.
2. Select “MAIN SIGNALS” in “DATA MONITOR” mode for “A/T” with CONSULT-III and read out the value of “SLCT LVR POSI”.
3. Check that the following three positions or indicators are same.

- Actual position of the selector lever
- “SLCT LVR POSI” on CONSULT-III screen
- Shift position indicator in the combination meter

OK or NG

OK >> **INSPECTION END**
NG >> Check the following.

SHIFT POSITION INDICATOR SYMPTOM CHART

Items	Presumed location of trouble
Actual position does not change.	Park/neutral position (PNP) switch • Refer to AT-86. A/T main system (Fail-safe function actuated) • Refer to AT-73, "CONSULT-III Function (A/T)" and AT-78, "Diagnosis Procedure without CONSULT-III".
Shift position indicator in the combination meter does not indicate any position.	Perform the self-diagnosis for A/T and the combination meter. • Refer to AT-73, "CONSULT-III Function (A/T)" and DI-4.
Actual position changes, but the shift position indicator in the combination meter does not change.	
Actual position differs from the shift position indicator in the combination meter.	
Shift position indicator in the combination meter does not indicate specific position only.	Check the combination meter. • Refer to DI-4.

TROUBLE DIAGNOSIS FOR SYMPTOMS

Wiring Diagram - AT - NONDTC

INFOID:0000000001703334

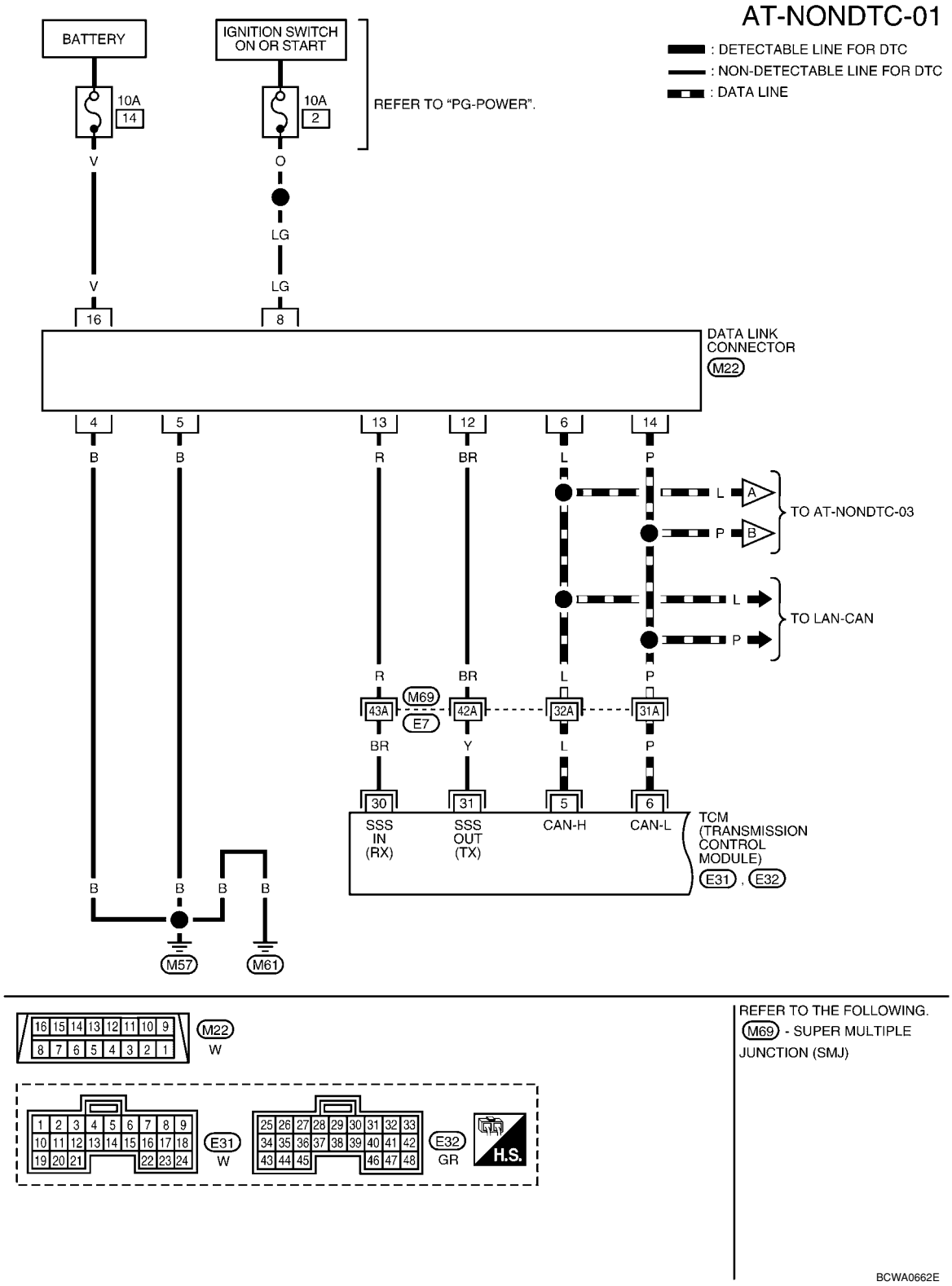

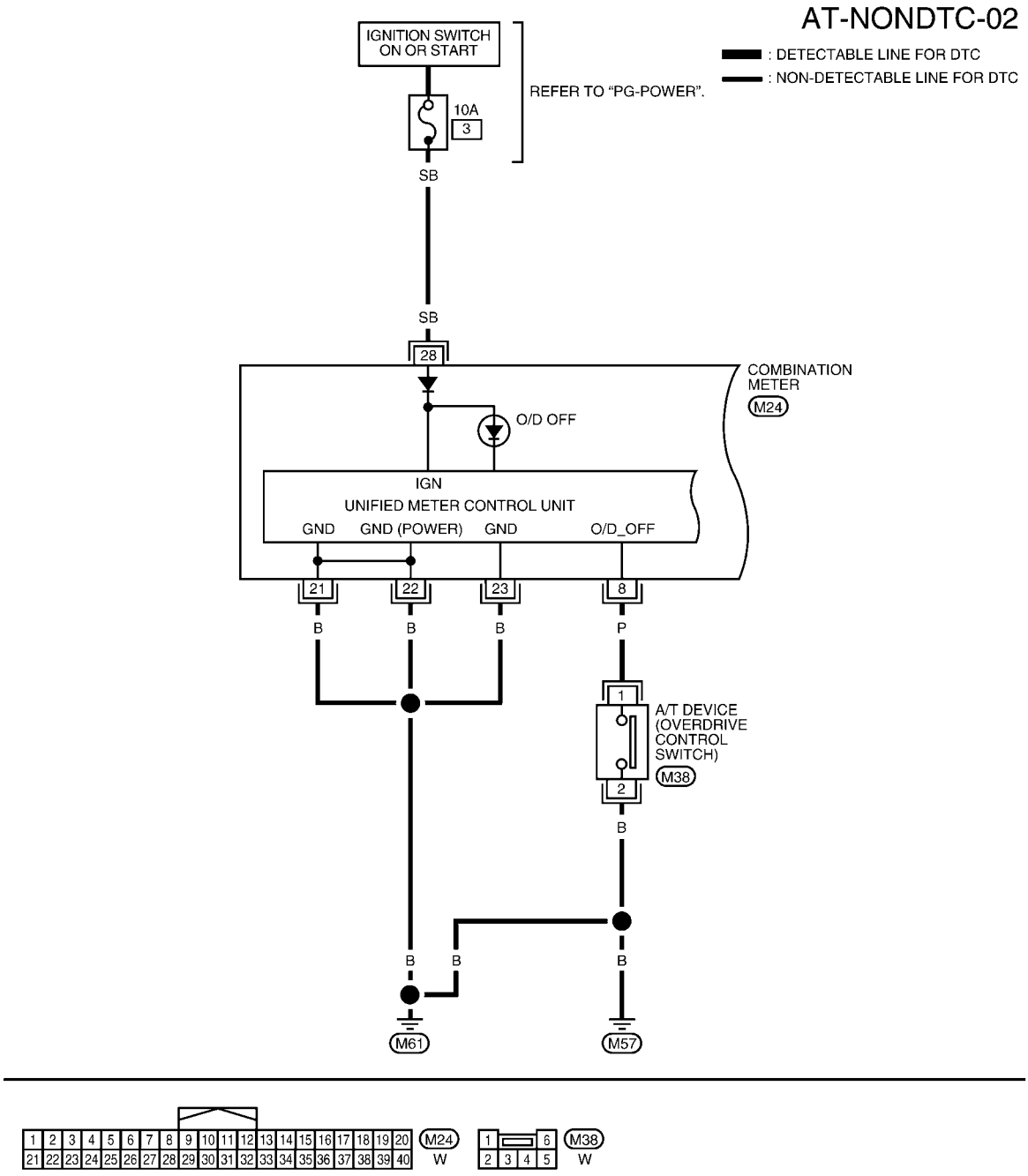
AT-NONDTC-02
: DETECTABLE LINE FOR DTC
: NON-DETECTABLE LINE FOR DTC
IGNITION SWITCH ON OR START
REFER TO "PG-POWER".
10A
3
SB
SB
28
COMBINATION METER
M24
O/D OFF
IGN
UNIFIED METER CONTROL UNIT
GND
GND (POWER)
GND
O/D_OFF
21
22
23
8
B
B
B
P
1
A/T DEVICE (OVERDRIVE CONTROL SWITCH)
M38
2
B
B
B
B
M61
M57

M24
W
M38
W

BCWA0663E

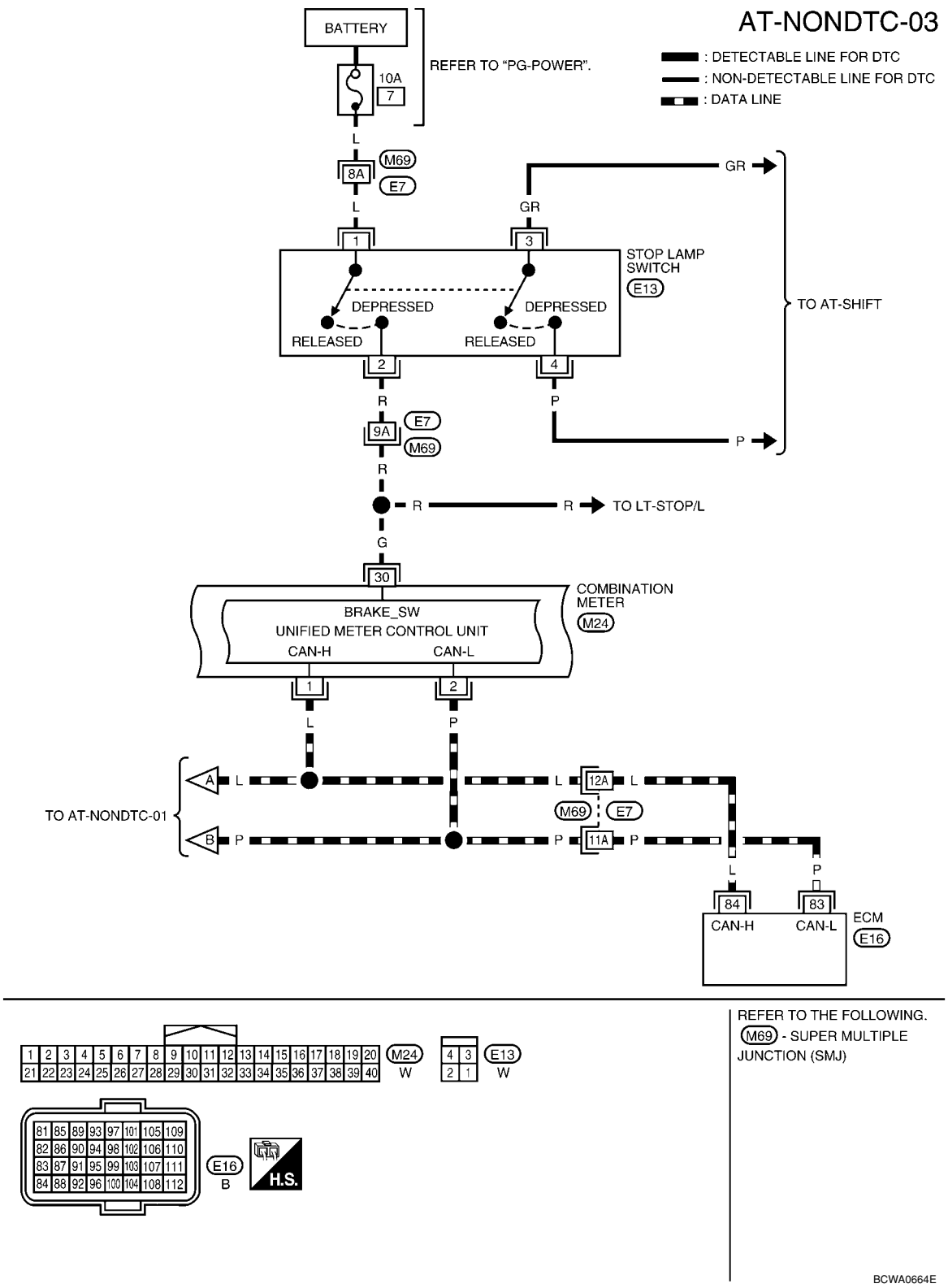
AT-NONDTC-03
: DETECTABLE LINE FOR DTC
: NON-DETECTABLE LINE FOR DTC
: DATA LINE
BATTERY
10A
7
REFER TO "PG-POWER".
L
8A
M69
E7
L
GR
GR
1
3
STOP LAMP SWITCH
E13
DEPRESSED
DEPRESSED
RELEASED
RELEASED
2
4
R
P
9A
E7
M69
R
P
TO AT-SHIFT
R
R
TO LT-STOP/L
G
30
COMBINATION METER
M24
BRAKE_SW
UNIFIED METER CONTROL UNIT
CAN-H
CAN-L
1
2
L
P
TO AT-NONDTC-01
A
B
L
P
L
P
12A
11A
M69
E7
L
P
84
83
CAN-H
CAN-L
ECM
E16
REFER TO THE FOLLOWING.
M69 - SUPER MULTIPLE JUNCTION (SMJ)
M24
W
E13
W
E16
B
H.S.
BCWA0664E

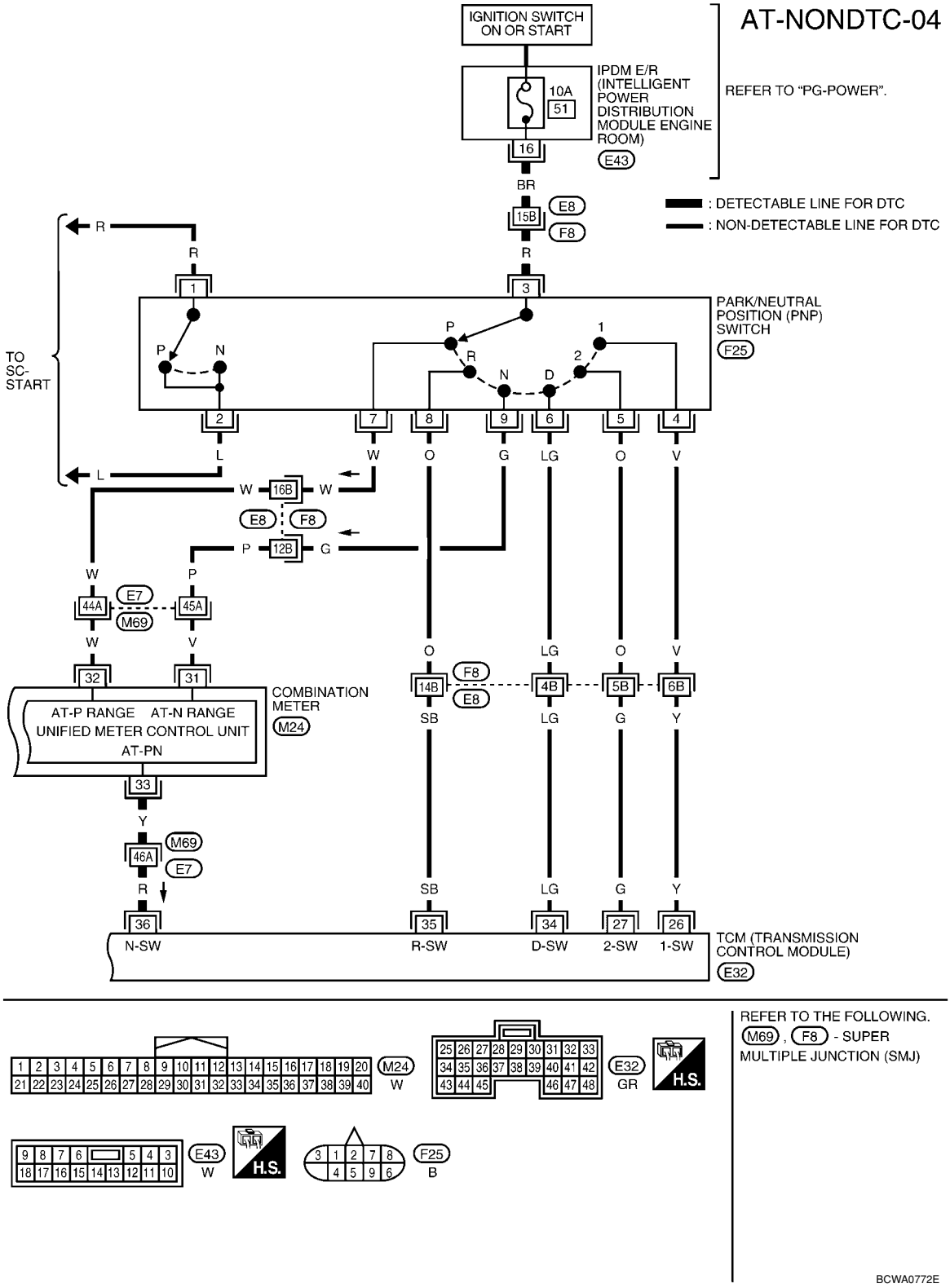

TCM TERMINALS AND REFERENCE VALUES

Refer to AT-71, "TCM Terminal and Reference Value" .

OD OFF Indicator Lamp Does Not Come On

INFOID:0000000001703335

SYMPTOM:

OD OFF indicator lamp does not come on for about 2 seconds when turning ignition switch to ON.

DIAGNOSTIC PROCEDURE

1. CHECK CAN COMMUNICATION LINE

Perform self-diagnosis. Refer to AT-73, "CONSULT-III Function (A/T)" .

Is a malfunction in CAN communication indicated in the results?

YES >> Check CAN communication line. Refer to AT-83 .
NO >> GO TO 2.

2. CHECK TCM POWER SOURCE

1. Turn ignition switch ON. (Do not start engine.)
2. Check voltage between TCM connector terminals and ground. Refer to AT-164, "Wiring Diagram - AT - MAIN" .

Item	Connector	Terminal	Judgement standard (Approx.)
TCM connector	E31	10 - Ground	Battery voltage
		19 - Ground	
	E32	28 - Ground	

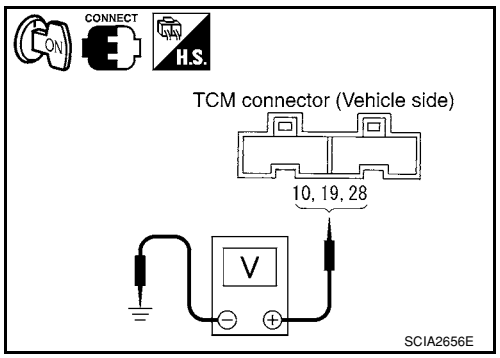

3. Turn ignition switch OFF.
4. Check voltage between TCM connector terminals and ground.

Item	Connector	Terminal	Judgement standard (Approx.)
TCM connector	E31	10 - Ground	0V
		19 - Ground	0V
	E32	28 - Ground	Battery voltage

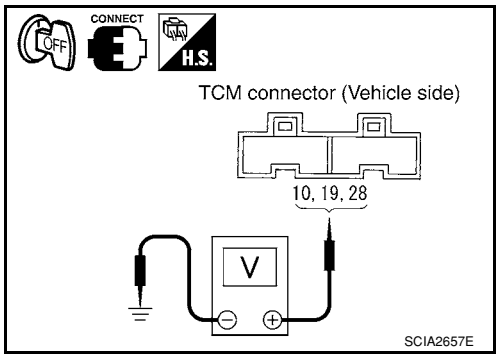

OK or NG

OK >> GO TO 4.
NG >> GO TO 3.

3. DETECT MALFUNCTIONING ITEM

Check the following.

- Harness for short or open between ignition switch and TCM connector terminals 10, 19. Refer to AT-164, "Wiring Diagram - AT - MAIN" .
- Harness for short or open between battery and TCM connector terminal 28. Refer to AT-164, "Wiring Diagram - AT - MAIN" .
- 10A fuse (No.13, located in the fuse block) and 10A fuse (No.49, located in the IPDM E/R). Refer to AT-164, "Wiring Diagram - AT - MAIN" .
- Ignition switch. Refer to PG-3 .

OK or NG

OK >> GO TO 4.
NG >> Repair or replace damaged parts.

4. CHECK TCM GROUND CIRCUIT

1. Turn ignition switch OFF.
2. Disconnect TCM connector.

3. Check continuity between TCM connector terminals and ground. Refer to AT-164, "Wiring Diagram - AT - MAIN" .

Item	Connector	Terminal	Continuity
TCM connector	E32	25, 48 - Ground	Yes

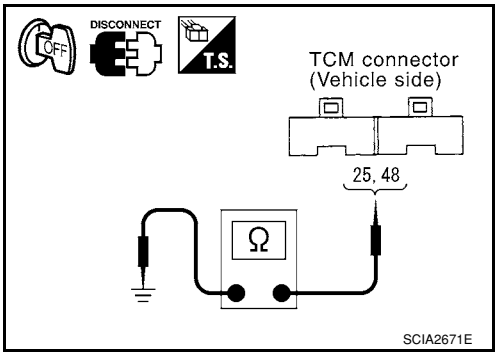

OK or NG

OK >> GO TO 5.
NG >> Repair open circuit or short to ground or short to power in harness or connectors.

5. DETECT MALFUNCTIONING ITEM

Check the following.
- Harness for short or open between ignition switch and combination meter
- Combination meter. Refer to DI-4 .

OK or NG

OK >> GO TO 6.
NG >> Repair or replace damaged parts.

6. CHECK SYMPTOM

Check again. Refer to AT-53, "Check Before Engine Is Started" .

OK or NG

OK >> **INSPECTION END**
NG >> GO TO 7.

7. CHECK TCM

1. Check TCM input/output. Refer to AT-71, "TCM Terminal and Reference Value" .
2. If NG, recheck TCM pin terminals for damage or loose connection with harness connector.

OK or NG

OK >> **INSPECTION END**
NG >> Repair or replace damaged parts.

Engine Cannot Be Started in "P" and "N" Position

INFOID:0000000001703336

SYMPTOM:
- **Engine cannot be started with selector lever in “P” or “N” position.**
- **Engine can be started with selector lever in “D”, “2”, “1” or “R” position.**

DIAGNOSTIC PROCEDURE

1. CHECK PNP SWITCH

Check continuity between PNP switch harness connector terminals. Refer to AT-87, "Wiring Diagram - AT - PNP/SW" .

Selector lever position	Connector	terminal	Continuity
“P”, “N”	F25	1 - 2	Yes
Other positions			No

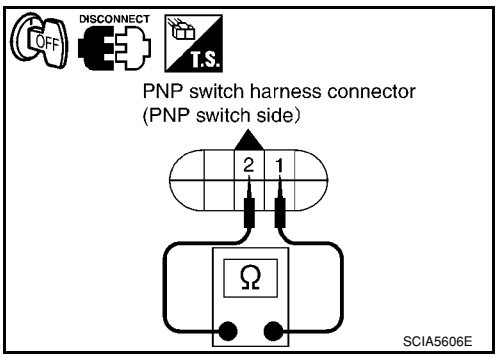

OK or NG

OK >> GO TO 3.
NG >> GO TO 2.

2. CHECK PNP SWITCH

Check PNP switch again with control cable disconnected from manual shaft of A/T assembly. Refer to test group 1.

OK or NG

OK >> Adjust A/T position. Refer to AT-207, "Adjustment of A/T Position" .

NG >> 1. Check PNP switch (Refer to test group 1.) again after adjusting PNP switch (Refer to AT-219).
- If OK, **INSPECTION END**
- If NG, repair or replace PNP switch. Refer to AT-219, "Park/Neutral Position (PNP) Switch" .

3. CHECK STARTING SYSTEM

Check starting system. Refer to SC-8 .

OK or NG

OK >> **INSPECTION END**
NG >> Repair or replace damaged parts.

In "P" Position, Vehicle Moves Forward or Backward When Pushed

INFOID:0000000001703337

SYMPTOM:
Vehicle moves when it is pushed forward or backward with selector lever in "P" position.

DIAGNOSTIC PROCEDURE

1. CHECK A/T POSITION

Check A/T position. Refer to AT-207, "Checking of A/T Position" .

OK or NG

OK >> GO TO 2.
NG >> Adjust A/T position. Refer to AT-207, "Adjustment of A/T Position" .

2. CHECK PARKING COMPONENTS

Check parking components. Refer to AT-230, "Component" and AT-240 .

OK or NG

OK >> **INSPECTION END**
NG >> Repair or replace damaged parts.

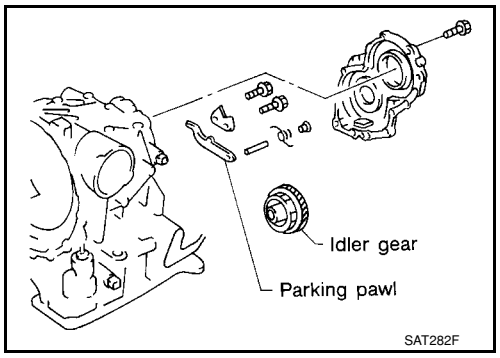

In "N" Position, Vehicle Moves

INFOID:0000000001703338

SYMPTOM:
Vehicle moves forward or backward when selecting "N" position.

DIAGNOSTIC PROCEDURE

1. CHECK A/T POSITION

Check A/T position. Refer to AT-207, "Checking of A/T Position" .

OK or NG

OK >> GO TO 2.
NG >> Adjust A/T position. Refer to AT-207, "Adjustment of A/T Position" .

2. CHECK A/T FLUID LEVEL

Check A/T fluid level. Refer to MA-22, "Checking A/T Fluid" .

OK or NG

OK >> GO TO 3.
NG >> Refill ATF.

3. CHECK A/T FLUID CONDITION

1. Remove oil pan. Refer to AT-230, "Component" .
2. Check A/T fluid condition. Refer to AT-48, "Inspections Before Trouble Diagnosis" .

OK or NG

OK >> GO TO 5.
NG >> GO TO 4.

4. DETECT MALFUNCTIONING ITEM

1. Disassemble A/T. Refer to AT-240, "Disassembly" .
2. Check the following items:
- Forward clutch assembly. Refer to AT-288, "Forward and Overrun Clutches" .
- Overrun clutch assembly. Refer to AT-288, "Forward and Overrun Clutches" .
- Reverse clutch assembly. Refer to AT-279, "Reverse Clutch" .

OK or NG

OK >> GO TO 5.
NG >> Repair or replace damaged parts.

5. CHECK SYMPTOM

Check again. Refer to AT-53, "Check at Idle" .

OK or NG

OK >> **INSPECTION END**
NG >> GO TO 6.

6. CHECK TCM

1. Check TCM input/output signals. Refer to AT-71, "TCM Terminal and Reference Value" .
2. If NG, recheck TCM pin terminals for damage or loose connection with harness connector.

OK or NG

OK >> **INSPECTION END**
NG >> Repair or replace damaged parts.

Large Shock "N" → "R" Position

INFOID:0000000001703339

SYMPTOM:

There is a large shock when changing from “N” to “R” position.

DIAGNOSTIC PROCEDURE

1. CHECK SELF-DIAGNOSTIC RESULTS

Perform self-diagnosis. Refer to AT-73, "CONSULT-III Function (A/T)" or AT-78, "Diagnosis Procedure without CONSULT-III" .

Is any malfunction detected by self-diagnostic results?

YES >> Check the malfunctioning system. Refer to AT-73, "CONSULT-III Function (A/T)" or AT-78, "Diagnosis Procedure without CONSULT-III" .
NO >> GO TO 2.

2. CHECK LINE PRESSURE

Check line pressure at idle with selector lever in “D” position. Refer to AT-48, "Inspections Before Trouble Diagnosis" .

OK or NG

OK >> GO TO 4.
NG >> GO TO 3.

3. DETECT MALFUNCTIONING ITEM

1. Remove control valve assembly. Refer to AT-216, "Control Valve Assembly and Accumulators" .
2. Check the following items:
- Valves to control line pressure (Pressure regulator valve, pressure modifier valve, pilot valve and pilot filter)
- Line pressure solenoid valve
- Oil pump assembly. Refer to AT-260, "Oil Pump" .

OK or NG

OK >> GO TO 4.

NG >> Repair or replace damaged parts.

4. CHECK SYMPTOM

Check again. Refer to AT-53, "Check at Idle" .

OK or NG

OK >> **INSPECTION END**
NG >> GO TO 5.

5. CHECK TCM

1. Check TCM input/output signals. Refer to AT-71, "TCM Terminal and Reference Value" .
2. If NG, recheck TCM pin terminals for damage or loose connection with harness connector.

OK or NG

OK >> **INSPECTION END**
NG >> Repair or replace damaged parts.

Vehicle Does Not Creep Backward in "R" Position

INFOID:0000000001703340

SYMPTOM:

Vehicle does not creep backward when selecting “R” position.

DIAGNOSTIC PROCEDURE

1. CHECK A/T FLUID LEVEL

Check A/T fluid level. Refer to MA-22, "Checking A/T Fluid" .

OK or NG

OK >> GO TO 2.
NG >> Refill ATF.

2. CHECK LINE PRESSURE

Check line pressure at idle with selector lever in “R” position. Refer to AT-48, "Inspections Before Trouble Diagnosis" .

OK or NG

OK >> GO TO 4.
NG >> GO TO 3.

3. DETECT MALFUNCTIONING ITEM

1. Remove control valve assembly. Refer to AT-216, "Control Valve Assembly and Accumulators" .
2. Check the following items:
- Valves to control line pressure (Pressure regulator valve, pressure modifier valve, pilot valve and pilot filter)
- Line pressure solenoid valve
3. Disassemble A/T. Refer to AT-240, "Disassembly" .
4. Check the following item:
- Oil pump assembly. Refer to AT-260, "Oil Pump" .

OK or NG

OK >> GO TO 4.
NG >> Repair or replace damaged parts.

4. CHECK STALL REVOLUTION

Check stall revolution with selector lever in “1” and “R” positions. Refer to AT-48, "Inspections Before Trouble Diagnosis" .

OK or NG

OK >> GO TO 6.
OK in “1” position, NG in “R” position>> GO TO 5.
NG in both “1” and “R” positions>> GO TO 7.

5. DETECT MALFUNCTIONING ITEM

1. Disassemble A/T. Refer to AT-240, "Disassembly" .

2. Check the following items:
- Low & reverse brake assembly. Refer to AT-295, "Low & Reverse Brake" .
- Reverse clutch assembly. Refer to AT-279, "Reverse Clutch" .

OK or NG

OK >> GO TO 6.
NG >> Repair or replace damaged parts.

6. CHECK A/T FLUID CONDITION

1. Remove oil pan. Refer to AT-230, "Component" .
2. Check A/T fluid condition. Refer to AT-48, "Inspections Before Trouble Diagnosis" .

OK or NG

OK >> GO TO 8.
NG >> GO TO 7.

7. DETECT MALFUNCTIONING ITEM

1. Disassemble A/T. Refer to AT-240, "Disassembly" .
2. Check the following items:
- Reverse clutch assembly. Refer to AT-279, "Reverse Clutch" .
- High clutch assembly. Refer to AT-284, "High Clutch" .
- Low & reverse brake assembly. Refer to AT-295, "Low & Reverse Brake" .
- Forward clutch assembly. Refer to AT-288, "Forward and Overrun Clutches" .
- Overrun clutch assembly. Refer to AT-288, "Forward and Overrun Clutches" .

OK or NG

OK >> GO TO 8.
NG >> Repair or replace damaged parts.

8. CHECK SYMPTOM

Check again. Refer to AT-53, "Check at Idle" .

OK or NG

OK >> **INSPECTION END**
NG >> GO TO 9.

9. CHECK TCM

1. Check TCM input/output signals. Refer to AT-71, "TCM Terminal and Reference Value" .
2. If NG, recheck TCM pin terminals for damage or loose connection with harness connector.

OK or NG

OK >> **INSPECTION END**
NG >> Repair or replace damaged parts.

Vehicle Does Not Creep Forward in "D", "2" or "1" Position

INFOID:0000000001703341

SYMPTOM:

Vehicle does not creep forward when selecting “D”, “2” or “1” position.

DIAGNOSTIC PROCEDURE

1. CHECK A/T FLUID LEVEL

Check A/T fluid level. Refer to MA-22, "Checking A/T Fluid" .

OK or NG

OK >> GO TO 2.
NG >> Refill ATF.

2. CHECK LINE PRESSURE

Check line pressure at idle with selector lever in “D” position. Refer to AT-48, "Inspections Before Trouble Diagnosis" .

OK or NG

OK >> GO TO 4.
NG >> GO TO 3.

3. DETECT MALFUNCTIONING ITEM

1. Remove control valve assembly. Refer to AT-216, "Control Valve Assembly and Accumulators" .
2. Check the following items:
- Valves to control line pressure (Pressure regulator valve, pressure modifier valve, pilot valve and pilot filter)
- Line pressure solenoid valve
3. Disassemble A/T. Refer to AT-240, "Disassembly" .
4. Check the following item:
- Oil pump assembly. Refer to AT-260, "Oil Pump" .

OK or NG

OK >> GO TO 4.
NG >> Repair or replace damaged parts.

4. CHECK STALL REVOLUTION

Check stall revolution with selector lever in “D” position. Refer to AT-48, "Inspections Before Trouble Diagnosis" .

OK or NG

OK >> GO TO 6.
NG >> GO TO 5.

5. DETECT MALFUNCTIONING ITEM

1. Disassemble A/T. Refer to AT-240, "Disassembly" .
2. Check the following items:
- Oil pump assembly. Refer to AT-260, "Oil Pump" .
- Forward clutch assembly. Refer to AT-288, "Forward and Overrun Clutches" .
- Forward one-way clutch. Refer to AT-299, "Rear Internal Gear and Forward Clutch Hub" .
- Low one-way clutch. Refer to AT-240, "Disassembly" .
- Torque converter. Refer to AT-240, "Disassembly" .

OK or NG

OK >> GO TO 7.
NG >> Repair or replace damaged parts.

6. CHECK A/T FLUID CONDITION

1. Remove oil pan. Refer to AT-230, "Component" .
2. Check A/T fluid condition. Refer to AT-48, "Inspections Before Trouble Diagnosis" .

OK or NG

OK >> GO TO 7.
NG >> GO TO 5.

7. CHECK SYMPTOM

Check again. Refer to AT-53, "Check at Idle" .

OK or NG

OK >> **INSPECTION END**
NG >> GO TO 8.

8. CHECK TCM

1. Check TCM input/output signals. Refer to AT-71, "TCM Terminal and Reference Value" .
2. If NG, recheck TCM pin terminals for damage or loose connection with harness connector.

OK or NG

OK >> **INSPECTION END**
NG >> Repair or replace damaged parts.

Vehicle Cannot Be Started from D_1

INFOID:0000000001703342

SYMPTOM:

Vehicle cannot be started from D_1 on “Cruise Test — Part 1”.

DIAGNOSTIC PROCEDURE

1. CHECK SYMPTOM

Check symptom. Refer to AT-53, "Check at Idle" .

Is “Vehicle Dose Not Creep Backward in “R” Position” OK?

OK >> GO TO 2.
NG >> Go to AT-181, "Vehicle Does Not Creep Backward in "R" Position" .

2. CHECK SELF-DIAGNOSTIC RESULTS

Perform self-diagnosis. Refer to AT-73, "CONSULT-III Function (A/T)" or AT-78, "Diagnosis Procedure without CONSULT-III" .

Is any malfunction detected by self-diagnostic results?

YES >> Check the malfunctioning system. Refer to AT-73, "CONSULT-III Function (A/T)" or AT-78, "Diagnosis Procedure without CONSULT-III" .
NO >> GO TO 3.

3. CHECK ACCELERATOR PEDAL POSITION SENSOR

Check accelerator pedal position sensor. Refer to EC-493 .

OK or NG

OK >> GO TO 4.
NG >> Repair or replace accelerator pedal position sensor.

4. CHECK LINE PRESSURE

Check line pressure at stall point with selector lever in “D” position. Refer to AT-48, "Inspections Before Trouble Diagnosis" .

OK or NG

OK >> GO TO 6.
NG >> GO TO 5.

5. DETECT MALFUNCTIONING ITEM

1. Remove control valve assembly. Refer to AT-216, "Control Valve Assembly and Accumulators" .
2. Check the following items:
- Shift valve A
- Shift valve B
- Shift solenoid valve A
- Shift solenoid valve B
- Pilot valve
- Pilot filter
3. Disassemble A/T. Refer to AT-240, "Disassembly" .
4. Check the following items:
- Forward clutch assembly. Refer to AT-288, "Forward and Overrun Clutches" .
- Low one-way clutch. Refer to AT-240, "Disassembly" .
- Forward one-way clutch. Refer to AT-299, "Rear Internal Gear and Forward Clutch Hub" .
- High clutch assembly. Refer to AT-284, "High Clutch" .
- Torque converter. Refer to AT-240, "Disassembly" .
- Oil pump assembly. Refer to AT-260, "Oil Pump" .

OK or NG

OK >> GO TO 8.
NG >> Repair or replace damaged parts.

6. CHECK A/T FLUID CONDITION

1. Remove oil pan. Refer to AT-230, "Component" .
2. Check A/T fluid condition. Refer to AT-48, "Inspections Before Trouble Diagnosis" .

OK or NG

OK >> GO TO 7.
NG >> GO TO 5.

7. DETECT MALFUNCTIONING ITEM

1. Remove control valve assembly. Refer to AT-216, "Control Valve Assembly and Accumulators" .
2. Check the following items:
- Shift valve A
- Shift valve B
- Shift solenoid valve A
- Shift solenoid valve B
- Pilot valve
- Pilot filter

OK or NG

OK >> GO TO 8.
NG >> Repair or replace damage parts.

8. CHECK SYMPTOM

Check again. Refer to AT-55, "Cruise Test - Part 1" .

OK or NG

OK >> **INSPECTION END**
NG >> GO TO 9.

9. CHECK TCM

1. Check TCM input/output signals. Refer to AT-71, "TCM Terminal and Reference Value" .
2. If NG, recheck TCM pin terminals for damage or loose connection with harness connector.

OK or NG

OK >> **INSPECTION END**
NG >> Repair or replace damaged parts.

A/T Does Not Shift: $D_1 \rightarrow D_2$ or Does Not Kickdown: $D_4 \rightarrow D_2$

INFOID:0000000001703343

SYMPTOM:

- **A/T does not shift from D_1 to D_2 at the specified speed on “Cruise Test — Part 1”.**
- **A/T does not shift from D_4 to D_2 when depressing accelerator pedal fully at the specified speed on “Cruise Test — Part 2”.**

DIAGNOSTIC PROCEDURE

1. CHECK SYMPTOM

Check symptom . Refer to AT-53, "Check at Idle" and AT-55, "Cruise Test - Part 1" .

Are “Vehicle Dose Not Creep Forward in “D”, “2” or “1” Position” and “Vehicle Cannot Be Started from D_1 ” OK?

YES >> GO TO 2.
NO >> Go to AT-182, "Vehicle Does Not Creep Forward in "D", "2" or "1" Position" and AT-183, "Vehicle Cannot Be Started from D_1" .

2. CHECK A/T POSITION

Check A/T position. Refer to AT-207, "Checking of A/T Position" .

OK or NG

OK >> GO TO 3.
NG >> Adjust A/T position. Refer to AT-207, "Adjustment of A/T Position" .

3. CHECK VEHICLE SPEED SENSOR·A/T AND VEHICLE SPEED SENSOR·MTR CIRCUIT

Check vehicle speed sensor·A/T (revolution sensor) and vehicle speed sensor·MTR circuit. Refer to AT-96 and AT-149 .

OK or NG

OK >> GO TO 4.
NG >> Repair or replace vehicle speed sensor·A/T (revolution sensor) and vehicle speed sensor·MTR circuits.

4. CHECK ACCELERATOR PEDAL POSITION SENSOR

Check accelerator pedal position sensor. Refer to EC-493 .

OK or NG

OK >> GO TO 5.
NG >> Repair or replace accelerator pedal position sensor.

5. CHECK A/T FLUID CONDITION

1. Remove oil pan. Refer to AT-230, "Component" .
2. Check A/T fluid condition. Refer to AT-48, "Inspections Before Trouble Diagnosis" .

OK or NG

OK >> GO TO 7.
NG >> GO TO 6.

6. DETECT MALFUNCTIONING ITEM

1. Remove control valve. Refer to AT-216, "Control Valve Assembly and Accumulators" .
2. Check the following items:
- Shift valve A
- Shift valve B
- Shift solenoid valve A
- Shift solenoid valve B
- Pilot valve
- Pilot filter
3. Disassemble A/T. Refer to AT-240, "Disassembly" .
4. Check the following items:
- Servo piston assembly
- Brake band

OK or NG

OK >> GO TO 8.
NG >> Repair or replace damaged parts.

7. DETECT MALFUNCTIONING ITEM

1. Remove control valve. Refer to AT-216, "Control Valve Assembly and Accumulators" .
2. Check the following items:
- Shift valve A
- Shift valve B
- Shift solenoid valve A
- Shift solenoid valve B
- Pilot valve
- Pilot filter

OK or NG

OK >> GO TO 8.
NG >> Repair or replace damaged parts.

8. CHECK SYMPTOM

Check again. Refer to AT-55, "Cruise Test - Part 1" and AT-58, "Cruise Test - Part 2" .

OK or NG

OK >> **INSPECTION END**
NG >> GO TO 9.

9. CHECK TCM

1. Check TCM input/output signals. Refer to AT-71, "TCM Terminal and Reference Value" .
2. If NG, recheck TCM pin terminals for damage or loose connection with harness connector.

OK or NG

OK >> **INSPECTION END**
NG >> Repair or replace damaged parts.

A/T Does Not Shift: D2→ D3

INFOID:0000000001703344

SYMPTOM:

A/T does not shift from D_2 to D_3 at the specified speed on “Cruise Test — Part 1” and “Cruise Test — Part 2”.

DIAGNOSTIC PROCEDURE

1. CHECK SYMPTOM

Check symptom. Refer to AT-53, "Check at Idle" and AT-55, "Cruise Test - Part 1" .

Are “Vehicle Does Not Creep Forward in “D”, “2” or “1” Position” and “Vehicle Cannot Be Started from D_1” OK?

YES >> GO TO 2.
NO >> Go to AT-182, "Vehicle Does Not Creep Forward in "D", "2" or "1" Position" and AT-183, "Vehicle Cannot Be Started from D_1" .

2. CHECK A/T POSITION

Check A/T position. Refer to AT-207, "Checking of A/T Position" .

OK or NG

OK >> GO TO 3.
NG >> Adjust A/T position. Refer to AT-207, "Adjustment of A/T Position" .

3. CHECK VEHICLE SPEED SENSOR·A/T AND VEHICLE SPEED SENSOR·MTR CIRCUIT

Check vehicle speed sensor·A/T (revolution sensor) and vehicle speed sensor·MTR circuit. Refer to AT-96 and AT-149 .

OK or NG

OK >> GO TO 4.
NG >> Repair or replace vehicle speed sensor·A/T (revolution sensor) and vehicle speed sensor·MTR circuits.

4. CHECK ACCELERATOR PEDAL POSITION SENSOR

Check accelerator pedal position sensor. Refer to EC-493 .

OK or NG

OK >> GO TO 5.
NG >> Repair or replace accelerator pedal position sensor.

5. CHECK A/T FLUID CONDITION

1. Remove oil pan. Refer to AT-230, "Component" .
2. Check A/T fluid condition. Refer to AT-48, "Inspections Before Trouble Diagnosis" .

OK or NG

OK >> GO TO 7.
NG >> GO TO 6.

6. DETECT MALFUNCTIONING ITEM

1. Remove control valve assembly. Refer to AT-216, "Control Valve Assembly and Accumulators" .
2. Check the following items:
- Shift valve B
- Shift solenoid valve B
- Pilot valve
- Pilot filter
3. Disassemble A/T. Refer to AT-240, "Disassembly" .
4. Check the following items:
- Servo piston assembly
- High clutch assembly. Refer to AT-284, "High Clutch" .
- Oil pump assembly. Refer to AT-260, "Oil Pump" .

OK or NG

OK >> GO TO 8.
NG >> Repair or replace damaged parts.

7. DETECT MALFUNCTIONING ITEM

1. Remove control valve assembly. Refer to AT-216, "Control Valve Assembly and Accumulators" .

2. Check the following items:
- Shift valve B
- Shift solenoid valve B
- Pilot valve
- Pilot filter

OK or NG

OK >> GO TO 8.
NG >> Repair or replace damaged parts.

8. CHECK SYMPTOM

Check again. Refer to AT-55, "Cruise Test - Part 1" and AT-58, "Cruise Test - Part 2" .

OK or NG

OK >> **INSPECTION END**
NG >> GO TO 9.

9. CHECK TCM

1. Check TCM input/output signal. Refer to AT-71, "TCM Terminal and Reference Value" .
2. If NG, recheck TCM pin terminals for damage or loose connection with harness connector.

OK or NG

OK >> **INSPECTION END**
NG >> Repair or replace damaged parts.

A/T Does Not Shift: $D_3 \rightarrow D_4$

INFOID:0000000001703345

SYMPTOM:

- **A/T does not shift from D_3 to D_4 at the specified speed on “Cruise Test — Part 1” and “Cruise Test — Part 2”.**
- **A/T must be warm before D_3 to D_4 shift will occur.**

DIAGNOSTIC PROCEDURE

1. CHECK SYMPTOM

Check symptom. Refer to AT-53, "Check at Idle" and AT-55, "Cruise Test - Part 1" .

Are “Vehicle Does Not Creep Forward in “D”, “2” or “1” Position” and “Vehicle Cannot Be Started from D_1 ” OK?

YES >> GO TO 2.
NO >> Go to AT-182, "Vehicle Does Not Creep Forward in "D", "2" or "1" Position" and AT-183, "Vehicle Cannot Be Started from D_1" .

2. CHECK SELF-DIAGNOSTIC RESULTS

Perform self-diagnosis. Refer to AT-73, "CONSULT-III Function (A/T)" or AT-78, "Diagnosis Procedure without CONSULT-III" .

Is any malfunction detected by self-diagnostic results?

YES >> Check the malfunctioning system. Refer to AT-73, "CONSULT-III Function (A/T)" or AT-78, "Diagnosis Procedure without CONSULT-III" .
NO >> GO TO 3.

3. CHECK ACCELERATOR PEDAL POSITION SENSOR

Check accelerator pedal position sensor. Refer to EC-493 .

OK or NG

OK >> GO TO 4.
NG >> Repair or replace accelerator pedal position sensor.

4. CHECK A/T FLUID CONDITION

1. Remove oil pan. Refer to AT-230, "Component" .
2. Check A/T fluid condition. Refer to AT-48, "Inspections Before Trouble Diagnosis" .

OK or NG

OK >> GO TO 6.

NG >> GO TO 5.

5. DETECT MALFUNCTIONING ITEM

1. Remove control valve assembly. Refer to AT-216, "Control Valve Assembly and Accumulators" .
2. Check the following items:
- Shift valve A
- Overrun clutch control valve
- Shift solenoid valve A
- Overrun clutch solenoid valve
- Pilot valve
- Pilot filter
3. Disassemble A/T. Refer to AT-240, "Disassembly" .
4. Check the following items:
- Servo piston assembly
- Brake band
- Torque converter. Refer to AT-240, "Disassembly" .
- Oil pump assembly. Refer to AT-260, "Oil Pump" .

OK or NG

OK >> GO TO 7.
NG >> Repair or replace damaged parts.

6. DETECT MALFUNCTIONING ITEM

1. Remove control valve assembly. Refer to AT-216, "Control Valve Assembly and Accumulators" .
2. Check the following items:
- Shift valve A
- Overrun clutch control valve
- Shift solenoid valve A
- Pilot valve
- Pilot filter

OK or NG

OK >> GO TO 7.
NG >> Repair or replace damaged parts.

7. CHECK SYMPTOM

Check again. Refer to AT-55, "Cruise Test - Part 1" and AT-58, "Cruise Test - Part 2" .

OK or NG

OK >> **INSPECTION END**
NG >> GO TO 8.

8. CHECK TCM

1. Check TCM input/output signals. Refer to AT-71, "TCM Terminal and Reference Value" .
2. If NG, recheck TCM pin terminals for damage or loose connection with harness connector.

OK or NG

OK >> **INSPECTION END**
NG >> Repair or replace damaged parts.

A/T Does Not Perform Lock-up

INFOID:0000000001703346

SYMPTOM:

A/T does not perform lock-up at the specified speed on “Cruise Test — Part 1”.

DIAGNOSTIC PROCEDURE

1. CHECK SELF-DIAGNOSTIC RESULTS

Perform self-diagnosis. Refer to AT-73, "CONSULT-III Function (A/T)" or AT-78, "Diagnosis Procedure without CONSULT-III" .

Is any malfunction detected by self-diagnostic results?

YES >> Check the malfunctioning system. Refer to AT-73, "CONSULT-III Function (A/T)" or AT-78, "Diagnosis Procedure without CONSULT-III" .

NO >> GO TO 2.

2. CHECK ACCELERATOR PEDAL POSITION SENSOR

Check accelerator pedal position sensor. Refer to EC-493 .

OK or NG

OK >> GO TO 3.
NG >> Repair or replace accelerator pedal position sensor.

3. DETECT MALFUNCTIONING ITEM

1. Remove control valve. Refer to AT-216, "Control Valve Assembly and Accumulators" .
2. Check following items:
- Torque converter clutch control valve
- Torque converter clutch solenoid valve
- Torque converter relief valve
- Pilot valve
- Pilot filter
3. Disassemble A/T. Refer to AT-240, "Disassembly" .
4. Check the following items:
- Torque converter. Refer to AT-240, "Disassembly" .

OK or NG

OK >> GO TO 4.
NG >> Repair or replace damaged parts.

4. CHECK SYMPTOM

Check again. Refer to AT-55, "Cruise Test - Part 1" .

OK or NG

OK >> **INSPECTION END**
NG >> GO TO 5.

5. CHECK TCM

1. Check TCM input/output signals. Refer to AT-71, "TCM Terminal and Reference Value" .
2. If NG, recheck TCM pin terminals for damage or loose connection with harness connector.

OK or NG

OK >> **INSPECTION END**
NG >> Repair or replace damaged parts.

A/T Does Not Hold Lock-up Condition

INFOID:0000000001703347

SYMPTOM:

A/T does not hold lock-up condition for more than 30 seconds on “Cruise Test — Part 1”.

DIAGNOSTIC PROCEDURE

1. CHECK SELF-DIAGNOSTIC RESULTS

Perform self-diagnosis. Refer to AT-73, "CONSULT-III Function (A/T)" or AT-78, "Diagnosis Procedure without CONSULT-III" .

Is any malfunction detected by self-diagnostic results?

YES >> Check the malfunctioning system. Refer to AT-73, "CONSULT-III Function (A/T)" or AT-78, "Diagnosis Procedure without CONSULT-III" .
NO >> GO TO 2.

2. CHECK A/T FLUID CONDITION

1. Remove oil pan. Refer to AT-230, "Component" .
2. Check A/T fluid condition. Refer to AT-48, "Inspections Before Trouble Diagnosis" .

OK or NG

OK >> GO TO 4.
NG >> GO TO 3.

3. DETECT MALFUNCTIONING ITEM

1. Remove control valve assembly. Refer to AT-216, "Control Valve Assembly and Accumulators" .
2. Check the following items:
- Torque converter clutch control valve
- Torque converter clutch solenoid valve
- Pilot valve
- Pilot filter
3. Disassemble A/T. Refer to AT-240, "Disassembly" .
4. Check the following items:
- Torque converter. Refer to AT-240, "Disassembly" .
- Oil pump assembly. Refer to AT-260, "Oil Pump" .

OK or NG

OK >> GO TO 5.
NG >> Repair or replace damaged parts.

4. DETECT MALFUNCTIONING ITEM

1. Remove control valve assembly. Refer to AT-216, "Control Valve Assembly and Accumulators" .
2. Check the following items:
- Torque converter clutch control valve
- Torque converter clutch solenoid valve
- Pilot valve
- Pilot filter

OK or NG

OK >> GO TO 5.
NG >> Repair or replace damaged parts.

5. CHECK SYMPTOM

Check again. Refer to AT-55, "Cruise Test - Part 1" .

OK or NG

OK >> **INSPECTION END**
NG >> GO TO 6.

6. CHECK TCM

1. Check TCM input/output signals. Refer to AT-71, "TCM Terminal and Reference Value" .
2. If NG, recheck TCM pin terminals for damage or loose connection with harness connector.

OK or NG

OK >> **INSPECTION END**
NG >> Repair or replace damaged parts.

Lock-up Is Not Released

INFOID:0000000001703348

SYMPTOM:

Lock-up is not released when accelerator pedal is released on “Cruise Test — Part 1”.

DIAGNOSTIC PROCEDURE

1. CHECK SELF-DIAGNOSTIC RESULTS

Perform self-diagnosis. Refer to AT-73, "CONSULT-III Function (A/T)" or AT-78, "Diagnosis Procedure without CONSULT-III" .

Is any malfunction detected by self-diagnostic results?

YES >> Check the malfunctioning system. Refer to AT-73, "CONSULT-III Function (A/T)" or AT-78, "Diagnosis Procedure without CONSULT-III" .
NO >> GO TO 2.

2. CHECK SYMPTOM

Check again. Refer to AT-55, "Cruise Test - Part 1" .

OK or NG

OK >> **INSPECTION END**
NG >> GO TO 3.

3. CHECK TCM

1. Check TCM input/output signals. Refer to AT-71, "TCM Terminal and Reference Value" .
2. If NG, recheck TCM pin terminals for damage or loose connection with harness connector.

OK or NG

OK >> **INSPECTION END**
NG >> Repair or replace damaged parts.

Engine Speed Does Not Return to Idle (Light Braking D4→ D3)

INFOID:0000000001703349

SYMPTOM:

Engine speed does not smoothly return to idle when A/T shifts from D4 to D3 on "Cruise Test — Part 1".

DIAGNOSTIC PROCEDURE

1. CHECK SELF-DIAGNOSTIC RESULTS

Perform self-diagnosis. Refer to AT-73, "CONSULT-III Function (A/T)" or AT-78, "Diagnosis Procedure without CONSULT-III" .

Is any malfunction detected by self-diagnostic results?

YES >> Check the malfunctioning system. Refer to AT-73, "CONSULT-III Function (A/T)" or AT-78, "Diagnosis Procedure without CONSULT-III" .
NO >> GO TO 2.

2. CHECK ACCELERATOR PEDAL POSITION SENSOR

Check accelerator pedal position sensor. Refer to EC-493 .

OK or NG

OK >> GO TO 3.
NG >> Repair or replace accelerator pedal position sensor.

3. CHECK A/T FLUID CONDITION

1. Remove oil pan. Refer to AT-230, "Component" .
2. Check A/T fluid condition. Refer to AT-48, "Inspections Before Trouble Diagnosis" .

OK or NG

OK >> GO TO 5.
NG >> GO TO 4.

4. DETECT MALFUNCTIONING ITEM

1. Remove control valve assembly. Refer to AT-216, "Control Valve Assembly and Accumulators" .
2. Check the following items:
- Overrun clutch control valve
- Overrun clutch reducing valve
- Overrun clutch solenoid valve
3. Disassemble A/T. Refer to AT-240, "Disassembly" .
4. Check the following items:
- Overrun clutch assembly. Refer to AT-288, "Forward and Overrun Clutches" .

OK or NG

OK >> GO TO 6.
NG >> Repair or replace damaged parts.

5. DETECT MALFUNCTIONING ITEM

1. Remove control valve assembly. Refer to AT-216, "Control Valve Assembly and Accumulators" .
2. Check the following items:
- Overrun clutch control valve
- Overrun clutch reducing valve
- Overrun clutch solenoid valve

OK or NG

OK >> GO TO 6.
NG >> Repair or replace damaged parts.

6. CHECK SYMPTOM

Check again. Refer to AT-55, "Cruise Test - Part 1" .

OK or NG

OK >> **INSPECTION END**
NG >> GO TO 7.

7. CHECK TCM

1. Check TCM input/output signals. Refer to AT-71, "TCM Terminal and Reference Value" .
2. If NG, recheck TCM pin terminals for damage or loose connection with harness connector.

OK or NG

OK >> **INSPECTION END**
NG >> Repair or replace damaged parts.

A/T Does Not Shift: D4→ D3, When OD OFF

INFOID:0000000001703350

SYMPTOM:

A/T does not shift from D4 to D3 when OD OFF (OD OFF indicator lamp is on) on "Cruise Test — Part 3".

DIAGNOSTIC PROCEDURE

1. CHECK CAN COMMUNICATION LINE

Perform self-diagnosis. Refer to AT-73, "CONSULT-III Function (A/T)" or AT-78, "Diagnosis Procedure without CONSULT-III" .

Is a malfunction in CAN communication indicated in the results?

YES >> Check CAN communication line. Refer to AT-83 .
NO >> GO TO 2.

2. CHECK OVERDRIVE CONTROL SWITCH CIRCUIT

With CONSULT-III

1. Turn ignition switch ON. (Do not start engine)
2. Select "TCM INPUT SIGNALS" in "DATA MONITOR" mode for "A/T" with CONSULT-III.
3. Read out "OVERDRIVE SW".
   Check the signal of the overdrive control switch is indicated properly.

Item name	Overdrive control switch Condition	Display value
OVERDRIVE SW	Depressed	ON
	Released	OFF

Without CONSULT-III

1. Turn ignition switch ON. (Do not start engine)
2. Check voltage between A/T device harness connector terminal and ground. Refer toAT-173, "Wiring Diagram - AT - NONDTC" .

Item	Connector	Terminal	Overdrive control switch Condition	Judge-ment standard (Approx.)
A/T device harness connector (Overdrive control switch)	M38	1 - Ground	Released	Battery voltage
			Depressed	0V

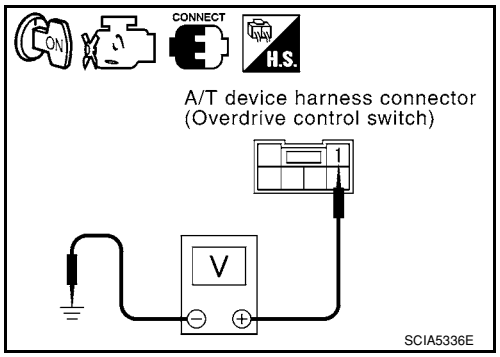

OK or NG

OK >> Go to AT-186, "A/T Does Not Shift: $D_2 \rightarrow D_3$" .
NG >> Check overdrive control switch. Refer to AT-171, "Component Inspection" .

A/T Does Not Shift: $D_3 \rightarrow 2_2$, When Selector Lever "D" → "2" Position

INFOID:0000000001703351

SYMPTOM:

A/T does not shift from D_3 to 2_2 when changing selector lever from “D” to “2” position on “Cruise Test — Part 3”.

DIAGNOSTIC PROCEDURE

1. CHECK SYMPTOM

Check symptom. Refer to AT-55, "Cruise Test - Part 1" or AT-58, "Cruise Test - Part 2" .

Is “A/T Does Not Shift: $D_1 \rightarrow D_2$ or Does Not Kickdown: $D_4 \rightarrow D_2$” OK?

YES (With CONSULT-III) >>GO TO 2.
YES (Without CONSULT-III) >>GO TO 3.
NO >> Go to AT-185, "A/T Does Not Shift: $D_1 \rightarrow D_2$ or Does Not Kickdown: $D_4 \rightarrow D_2$" .

2. CHECK PNP SWITCH CIRCUIT

With CONSULT-III

1. Turn ignition switch ON. (Do not start engine.)
2. Select “TCM INPUT SIGNALS” in “DATA MONITOR” mode for “A/T” with CONSULT-III.
3. Read out “P·N”, “R”, “D”, “2” and “1” position switches moving selector lever to each position.

Monitor item	Condition	Display value
PN POSI SW	When setting selector lever to “N” or “P” position.	ON
	When setting selector lever to other positions.	OFF
R POSITION SW	When setting selector lever to “R” position.	ON
	When setting selector lever to other positions.	OFF
D POSITION SW	When setting selector lever to “D” positions.	ON
	When setting selector lever to other positions.	OFF
2 POSITION SW	When setting selector lever to “2” position.	ON
	When setting selector lever to other positions.	OFF
1 POSITION SW	When setting selector lever to “1” position.	ON
	When setting selector lever to other positions.	OFF

OK or NG

OK >> **INSPECTION END**
NG >> Check PNP switch. Refer to AT-171, "Component Inspection" .

3. CHECK PNP SWITCH CIRCUIT

Without CONSULT-III

1. Turn ignition switch ON. (Do not start engine.)

2. Check voltage between TCM connector terminals and ground while moving selector lever through each position. Refer to AT-87, "Wiring Diagram - AT - PNP/SW" .

Selector lever position	Terminal				
	36	35	34	27	26
“P”, “N”	B	0	0	0	0
“R”	0	B	0	0	0
“D”	0	0	B	0	0
“2”	0	0	0	B	0
“1”	0	0	0	0	B

B: Battery voltage

0: 0V

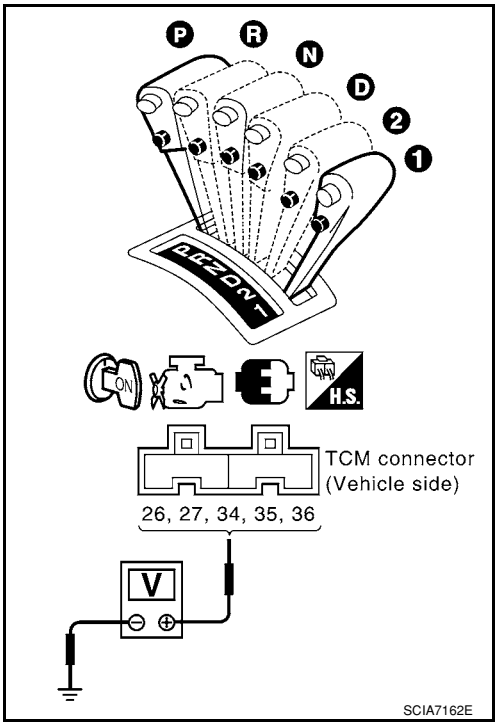

OK or NG

OK >> **INSPECTION END**

NG >> Check PNP switch. Refer to AT-171, "Component Inspection" .

A/T Does Not Shift: $2_2 \rightarrow 1_1$, When Selector Lever "2" → "1" Position

INFOID:0000000001703352

SYMPTOM:

A/T does not shift from 2_2 to 1_1 when changing selector lever from “2” to “1” position on “Cruise Test — Part 3”.

DIAGNOSTIC PROCEDURE

1. CHECK PNP SWITCH CIRCUIT

With CONSULT-III

1. Turn ignition switch ON. (Do not start engine.)
2. Select “TCM INPUT SIGNALS” in “DATA MONITOR” mode for “A/T” with CONSULT-III.
3. Read out “P·N”, “R”, “D”, “2” and “1” position switches moving selector lever to each position.

Monitor item	Condition	Display value
PN POSI SW	When setting selector lever to “N” or “P” position.	ON
	When setting selector lever to other positions.	OFF
R POSITION SW	When setting selector lever to “R” position.	ON
	When setting selector lever to other positions.	OFF
D POSITION SW	When setting selector lever to “D” positions.	ON
	When setting selector lever to other positions.	OFF
2 POSITION SW	When setting selector lever to “2” position.	ON
	When setting selector lever to other positions.	OFF
1 POSITION SW	When setting selector lever to “1” position.	ON
	When setting selector lever to other positions.	OFF

OK or NG

OK >> GO TO 3
NG >> Check PNP switch. Refer to AT-171, "Component Inspection" .

2. CHECK PNP SWITCH CIRCUIT

Without CONSULT-III

1. Turn ignition switch ON. (Do not start engine.)
2. Check voltage between TCM connector terminals and ground while moving selector lever through each position. Refer to AT-87, "Wiring Diagram - AT - PNP/SW" .

Selector lever position	Terminal				
	36	35	34	27	26
"P", "N"	B	0	0	0	0
"R"	0	B	0	0	0
"D"	0	0	B	0	0
"2"	0	0	0	B	0
"1"	0	0	0	0	B

B: Battery voltage
0: 0V

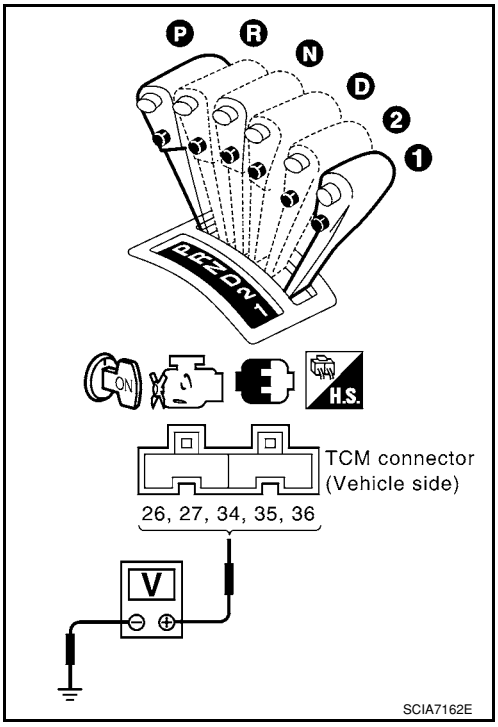

OK or NG

OK >> GO TO 3
NG >> Check PNP switch. Refer to AT-171, "Component Inspection" .

3. CHECK A/T POSITION

Check A/T position. Refer to AT-207, "Checking of A/T Position" .

OK or NG

OK >> GO TO 4.
NG >> Adjust A/T position. Refer to AT-207, "Adjustment of A/T Position" .

4. CHECK VEHICLE SPEED SENSOR·A/T AND VEHICLE SPEED SENSOR·MTR CIRCUIT

Check vehicle speed sensor·A/T (revolution sensor) and vehicle speed sensor·MTR circuit. Refer to AT-96 and/or AT-149 .

OK or NG

OK >> GO TO 5.
NG >> Repair or replace vehicle speed sensor·A/T (revolution sensor) and/or vehicle speed sensor·MTR circuits.

5. CHECK A/T FLUID CONDITION

1. Remove oil pan. Refer to AT-230, "Component" .
2. Check A/T fluid condition. Refer to AT-48, "Inspections Before Trouble Diagnosis" .

OK or NG

OK >> GO TO 7.
NG >> GO TO 6.

6. DETECT MALFUNCTIONING ITEM

1. Remove control valve assembly. Refer to AT-216, "Control Valve Assembly and Accumulators" .
2. Check the following items:

- Shift valve A
- Shift solenoid valve A
- Overrun clutch control valve
- Overrun clutch solenoid valve

3. Disassemble A/T. Refer to AT-240, "Disassembly" .
4. Check the following items:
- Servo piston assembly
- Brake band

OK or NG

OK >> GO TO 7.
NG >> Repair or replace damaged parts.

7. CHECK SYMPTOM

Check again. Refer to AT-59, "Cruise Test - Part 3" .

OK or NG

OK >> **INSPECTION END**
NG >> GO TO 8.

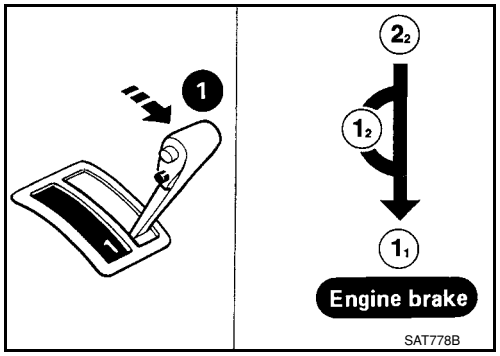

8. CHECK TCM

1. Check TCM input/output signals. Refer to AT-71, "TCM Terminal and Reference Value" .
2. If NG, recheck TCM pin terminals for damage or loose connection with harness connector.

OK or NG

OK >> **INSPECTION END**
NG >> Repair or replace damaged parts.

Vehicle Does Not Decelerate by Engine Brake

INFOID:0000000001703353

SYMPTOM:

- **Vehicle does not decelerate by engine brake when shifting from 2_2 (1_2) to 1_1"Cruise Test — Part 3".**
- **Vehicle does not decelerate by engine brake when OD OFF (OD OFF indicator lamp is on) on "Cruise Test — Part 3".**
- **Vehicle does not decelerate by engine brake when shifting A/T from "D" to "2" position on "Cruise Test — Part 3".**

DIAGNOSTIC PROCEDURE

1. CHECK CAN COMMUNICATION LINE

Perform self-diagnosis. Refer to AT-73, "CONSULT-III Function (A/T)" or AT-78, "Diagnosis Procedure without CONSULT-III" .

Is a malfunction in CAN communication indicated in the results?

YES >> Check CAN communication line. Refer to AT-83 .
NO >> GO TO 2.

2. CHECK OVERDRIVE CONTROL SWITCH CIRCUIT

With CONSULT-III

1. Turn ignition switch ON. (Do not start engine)
2. Select "TCM INPUT SIGNALS" in "DATA MONITOR" mode for "A/T" with CONSULT-III.
3. Read out "OVERDRIVE SW".
   Check the signal of the overdrive control switch is indicated properly.

Item name	Overdrive control switch Condition	Display value
OVERDRIVE SW	Depressed	ON
	Released	OFF

Without CONSULT-III

1. Turn ignition switch ON. (Do not start engine)
2. Check voltage between A/T device harness connector terminal and ground. Refer to AT-173, "Wiring Diagram - AT - NONDTC" .

Item	Connector	Terminal	Overdrive control switch Condition	Judge-ment standard (Approx.)
A/T device harness connector (Overdrive control switch)	M38	1 - Ground	Released	Battery voltage
			Depressed	0V

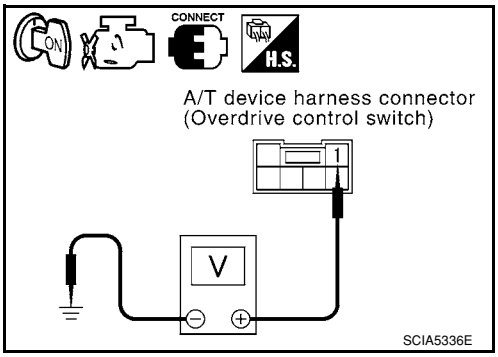

OK or NG

OK (With CONSULT-III)>>GO TO 3.
OK (Without CONSULT-III)>>GO TO 4.
NG >> Check overdrive control switch. Refer to AT-171, "Component Inspection" .

3. CHECK PNP SWITCH CIRCUIT

With CONSULT-III

1. Turn ignition switch ON. (Do not start engine.)
2. Select “TCM INPUT SIGNALS” in “DATA MONITOR” mode for “A/T” with CONSULT-III.
3. Read out “P·N”, “R”, “D”, “2” and “1” position switches moving selector lever to each position.

Monitor item	Condition	Display value
PN POSI SW	When setting selector lever to “N” or “P” position.	ON
	When setting selector lever to other positions.	OFF
R POSITION SW	When setting selector lever to “R” position.	ON
	When setting selector lever to other positions.	OFF
D POSITION SW	When setting selector lever to “D” positions.	ON
	When setting selector lever to other positions.	OFF
2 POSITION SW	When setting selector lever to “2” position.	ON
	When setting selector lever to other positions.	OFF
1 POSITION SW	When setting selector lever to “1” position.	ON
	When setting selector lever to other positions.	OFF

OK or NG

OK >> GO TO 5
NG >> Check PNP switch. Refer to AT-171, "Component Inspection" .

4. CHECK PNP SWITCH CIRCUIT

Without CONSULT-III

1. Turn ignition switch ON. (Do not start engine.)

2. Check voltage between TCM connector terminals and ground while moving selector lever through each position. Refer to AT-87, "Wiring Diagram - AT - PNP/SW" .

Selector lever position	Terminal				
	36	35	34	27	26
“P”, “N”	B	0	0	0	0
“R”	0	B	0	0	0
“D”	0	0	B	0	0
“2”	0	0	0	B	0
“1”	0	0	0	0	B

B: Battery voltage

0: 0V

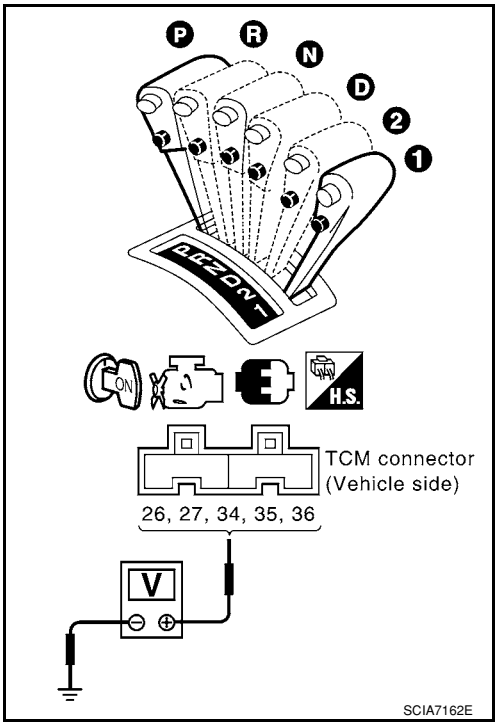

OK or NG

OK >> GO TO 5

NG >> Check PNP switch. Refer to AT-171, "Component Inspection" .

5. CHECK A/T POSITION

Check A/T position. Refer to AT-207, "Checking of A/T Position" .

OK or NG

OK >> GO TO 6.

NG >> Adjust A/T position. Refer to AT-207, "Adjustment of A/T Position" .

6. CHECK VEHICLE SPEED SENSOR·A/T AND VEHICLE SPEED SENSOR·MTR CIRCUIT

Check vehicle speed sensor·A/T (revolution sensor) and vehicle speed sensor·MTR circuit. Refer to AT-96 and/or AT-149 .

OK or NG

OK >> GO TO 7.

NG >> Repair or replace vehicle speed sensor·A/T (revolution sensor) and/or vehicle speed sensor·MTR circuits.

7. CHECK ACCELERATOR PEDAL POSITION SENSOR

Check accelerator pedal position sensor. Refer to EC-493 .

OK or NG

OK >> GO TO 8.

NG >> Repair or replace accelerator pedal position sensor.

8. CHECK A/T FLUID CONDITION

1. Remove oil pan. Refer to AT-230, "Component" .
2. Check A/T fluid condition. Refer to AT-48, "Inspections Before Trouble Diagnosis" .

OK or NG

OK >> GO TO 10.

NG >> GO TO 9.

9. DETECT MALFUNCTIONING ITEM

1. Remove control valve assembly. Refer to AT-216, "Control Valve Assembly and Accumulators" .
2. Check the following.

- Shift valve A
- Overrun clutch solenoid valve

3. Disassemble A/T. Refer to AT-240, "Disassembly" .
4. Check the following.
- Overrun clutch assembly. Refer to AT-288, "Forward and Overrun Clutches" .
- Low & reverse brake assembly. Refer to AT-295, "Low & Reverse Brake" .

OK or NG

OK >> GO TO 10.
NG >> Repair or replace damaged parts.

10. CHECK SYMPTOM

Check again. Refer to AT-59, "Cruise Test - Part 3" .

OK or NG

OK >> **INSPECTION END**
NG >> GO TO 11.

11. CHECK TCM

1. Check TCM input/output signals. Refer to AT-71, "TCM Terminal and Reference Value" .
2. If NG, recheck TCM pin terminals for damage or loose connection with harness connector.

OK or NG

OK >> **INSPECTION END**
NG >> Repair or replace damaged parts.

TCM Self-Diagnosis Does Not Activate

INFOID:0000000001703354

SYMPTOM:

OD OFF indicator lamp does not come on in TCM self-diagnostic procedure even if the lamp circuit is good.

DESCRIPTION

- PNP switch
  PNP switch assembly includes a transaxle position switch. The transaxle position switch detects the selector lever position and sends a signal to the TCM.

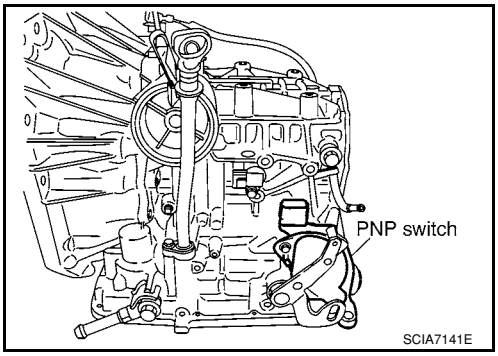

- Overdrive control switch
  Overdrive control switch detects the switch position (ON or OFF) and sends the signal via CAN communication to the TCM.

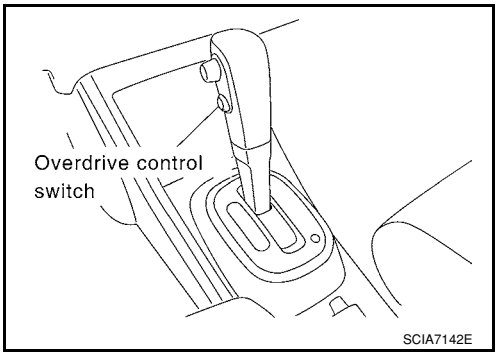

- Closed throttle position signal and wide open throttle position signal
  ECM judges throttle opening based on a signal from accelerator pedal position sensor, and sends the signal via CAN communication to the TCM.

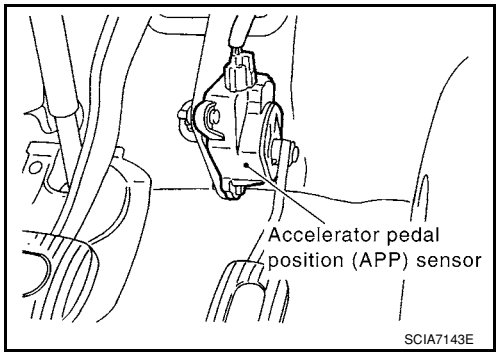

DIAGNOSTIC PROCEDURE

NOTE:

The diagnostic procedure includes inspection for the PNP stitch, overdrive control switch, closed throttle position signal and wide open throttle position signal circuit. Refer to AT-167 .

TRANSMISSION CONTROL MODULE

Removal and Installation

INFOID:0000000001703355

COMPONENTS

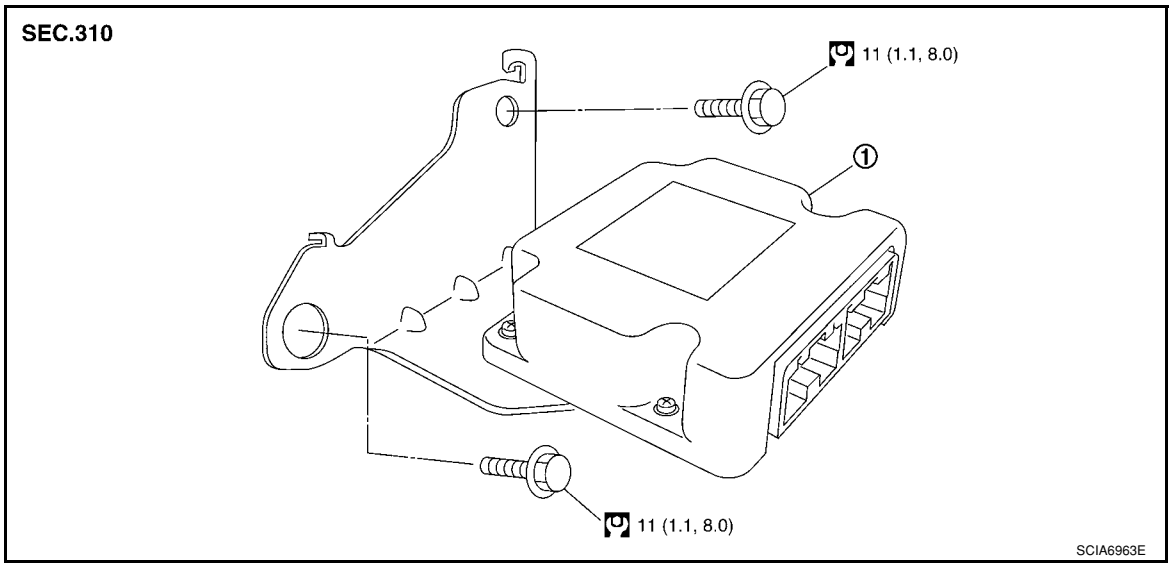

1. TCM

REMOVAL

1. Disconnect the battery negative terminal.
2. Disconnect TCM harness connectors (1) from TCM (2).
   - Instrument lower finisher (3)
3. Remove TCM (2).

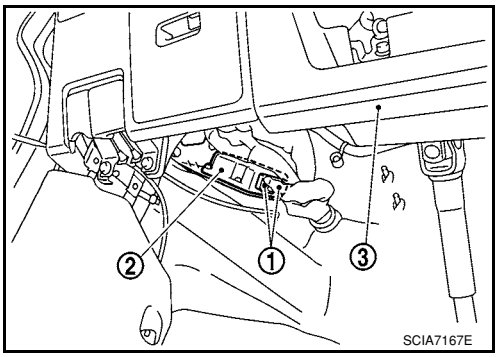

INSTALLATION

Installation is in the reverse order of removal.

SHIFT CONTROL SYSTEM

Control Device Removal and Installation

INFOID:0000000001703356

CONTROL DEVICE COMPONENTS

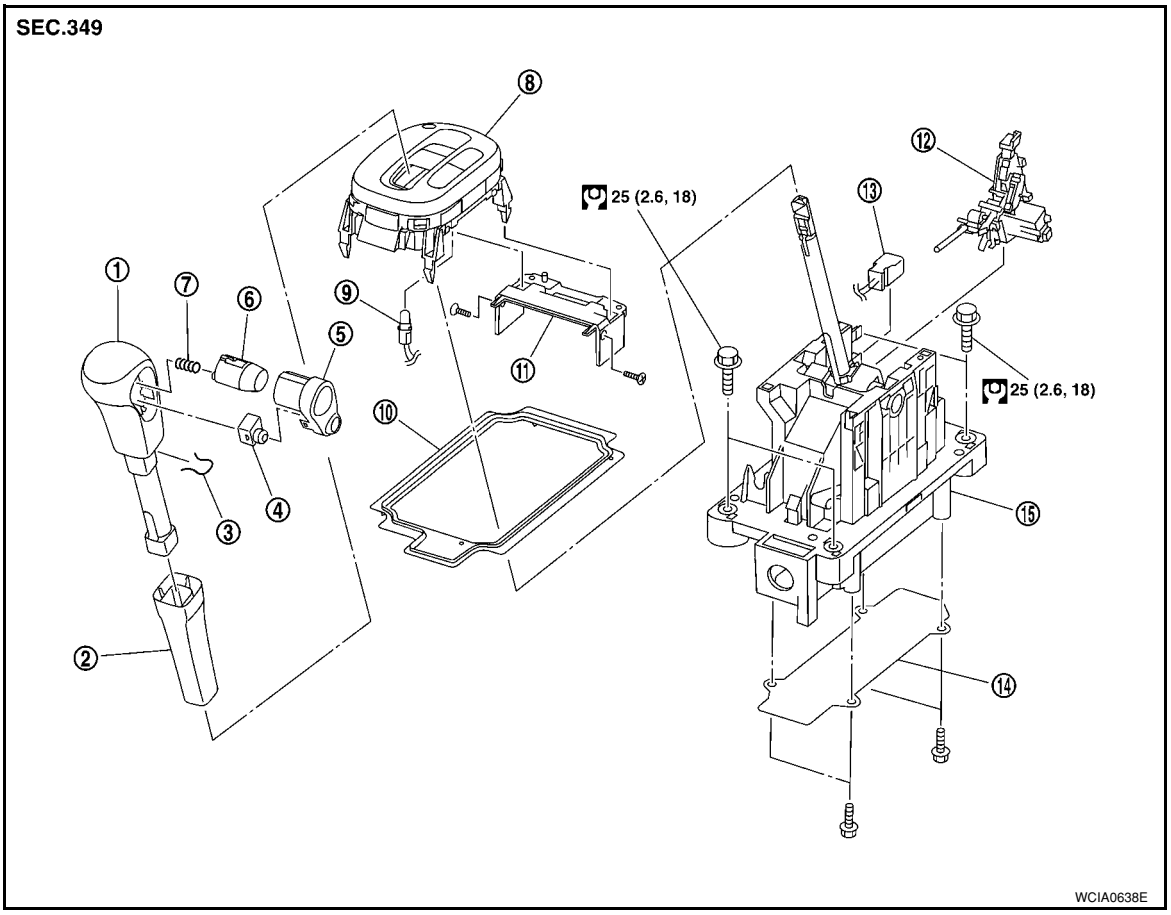

1. Selector lever knob	2. Knob cover	3. Lock pin
4. Overdrive control switch	5. Knob finisher	6. Selector button
7. Selector button return spring	8. Position indicator plate	9. Position lamp
10. Dust cover	11. Bracket	12. Shift lock solenoid and park position switch assembly
13. A/T device harness connector	14. Plate	15. Control device assembly

CONTROL CABLE COMPONENTS

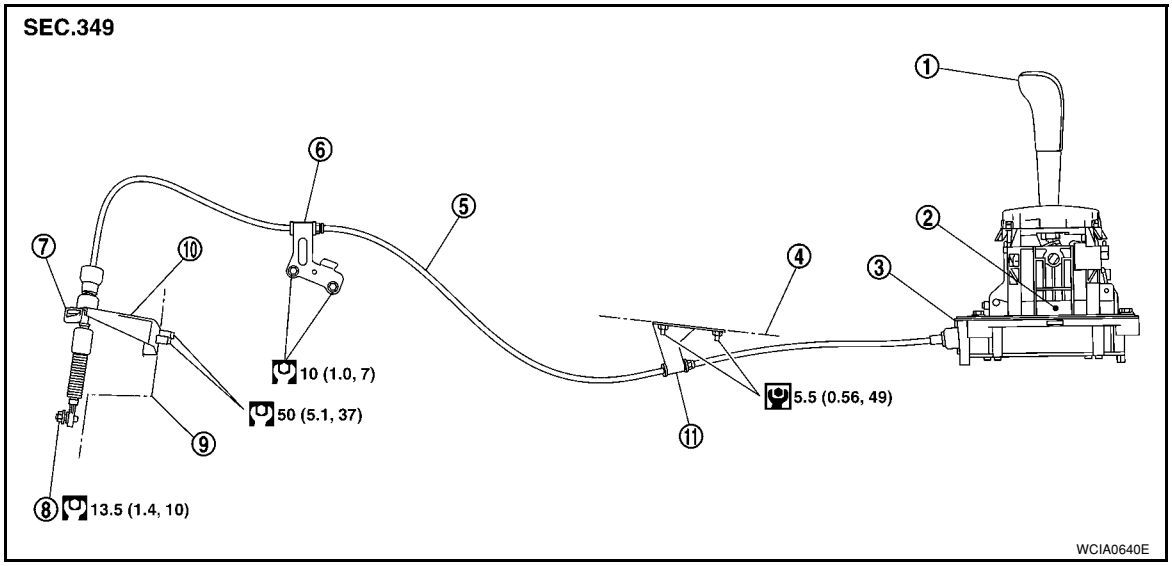

1. Selector lever knob	2. Control device assembly	3. Lock plate
4. Floor panel	5. Control cable	6. Bracket
7. Lock plate	8. Lock nut	9. A/T assembly
10. Bracket	11. Bracket	

REMOVAL

CAUTION:

Make sure that parking brake is applied before removal/installation.

1. Place the selector lever in the “N” position.
2. Remove the center console assembly. Refer to IP-10.
3. Disconnect the A/T device harness connector (1).
4. Remove the key interlock cable from the control device assembly. Refer to AT-213, "Removal and Installation".

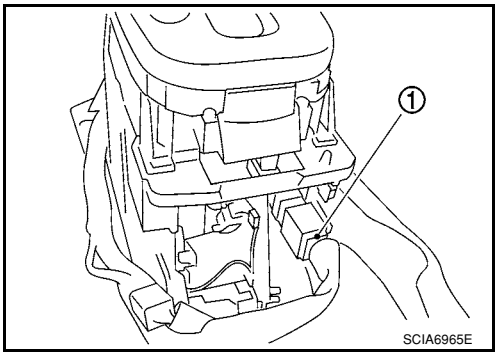

5. Remove the bolts (A) from the control device assembly (1).
6. Remove exhaust front tube, center muffler and heat plates. Refer to EM-21.

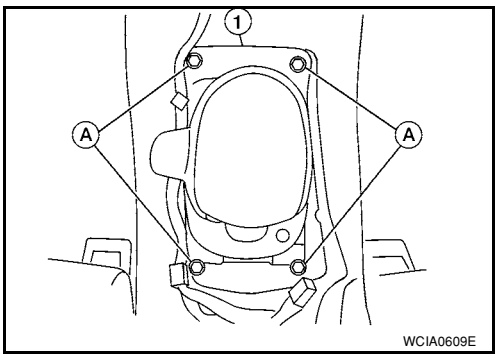

7. Remove the plate (1) from the control device assembly.
   ⇦: Vehicle front

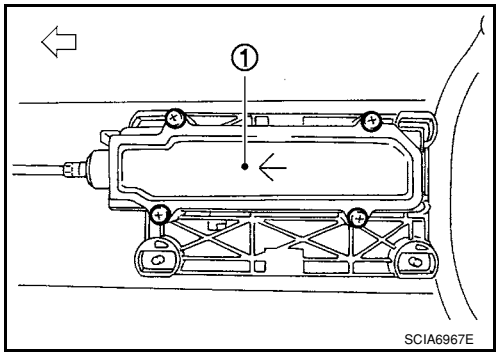

8. Remove the lock plate (1) from the control cable (2).
   ⇦: Vehicle front
9. Remove the control cable (2) from the control device assembly.

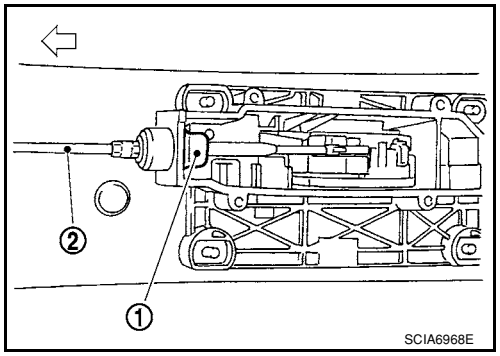

10. Insert flat-bladed screwdrivers at points (A) and (B) as shown, and press both tabs (E) and (F) at the front (C) and rear (D) slightly toward the center of the control device assembly to remove the control device assembly from the underside of the vehicle.
    ⇦: Vehicle front

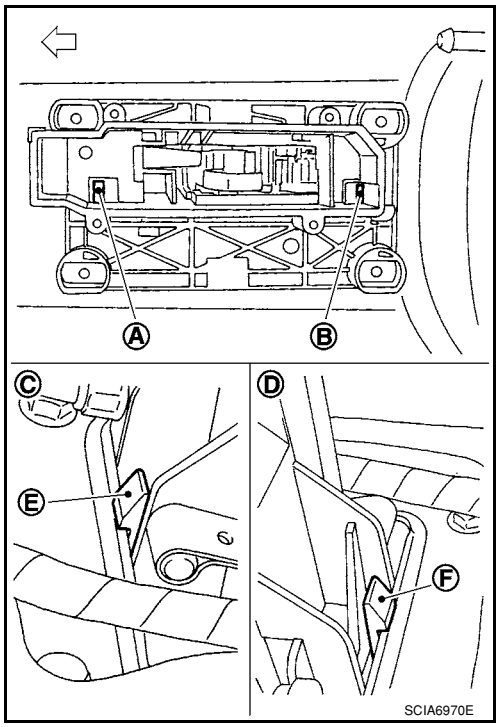

INSTALLATION

Installation is in the reverse order of removal.

- When installing the control cable (1) to the control device assembly (2), make sure that the control cable (1) is fully pressed in with the ribbed surface (A) facing downward from the vehicle.
  ⇦: Vehicle front
- After installation is completed, adjust and check the A/T position. Refer to AT-207, "Adjustment of A/T Position" and AT-207, "Checking of A/T Position".

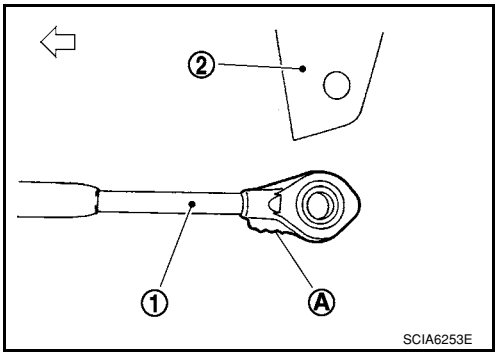

Control Device Disassembly and Assembly

INFOID:0000000001703357

DISASSEMBLY

NOTE:

Refer to AT-203, "Control Device Removal and Installation" to disassemble.

1. Remove selector lever knob from control device assembly. Refer to AT-206, "Selector Lever Knob Removal and Installation".
2. Remove position lamp from position indicator plate (1).
3. Insert a flat-bladed screwdriver to (A) (at 4 locations) as shown, and bend each hook slightly to raise position indicator plate (1) and remove from control device assembly (2).
4. Remove bracket from control device assembly (2).
5. Remove A/T device harness connector from control device assembly (2).

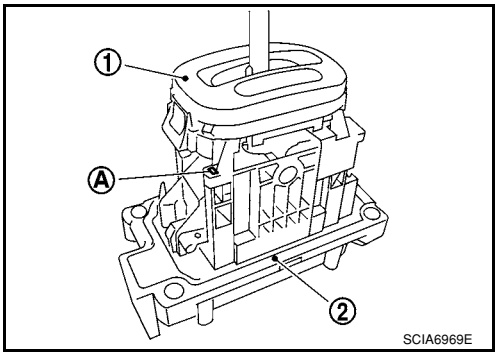

6. Release tabs (A) on shift lock solenoid and park position switch assembly from hooks (B) on control device assembly to shift lock solenoid and park position switch assembly.

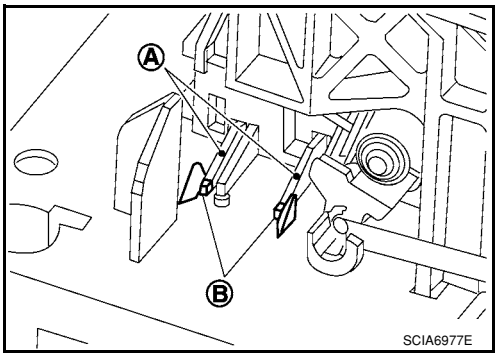

ASSEMBLY

Assemble in the reverse order of disassembly.

Selector Lever Knob Removal and Installation

INFOID:0000000001703358

REMOVAL

CAUTION:

Make sure that parking brake is applied before removal/installation.

1. Place the selector lever knob (1) in “N” position.
2. Slide knob cover (2) downward.
3. Pull out lock pin (3) from selector lever knob (1).
4. Remove selector lever knob (1) and knob cover (2) as a set from selector lever.
   CAUTION:
   Do not push selector button.

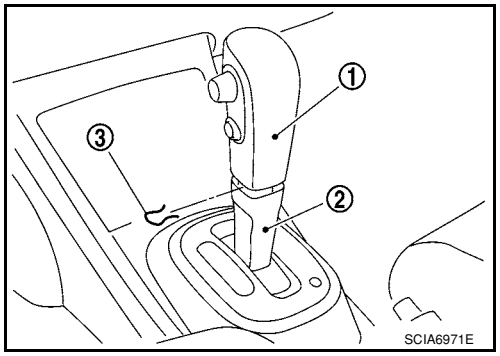

INSTALLATION

1. Insert lock pin (1) to selector lever knob (2).
2. Install knob cover (3) to selector lever knob (2).
3. Place the selector lever in “N” position.
4. Install selector lever knob over selector lever until a click is felt.
   CAUTION:
   - **Do not tilt selector lever knob when installing. Install it straight, and do not tap or apply any shock to install it.**
   - **Do not push selector button.**

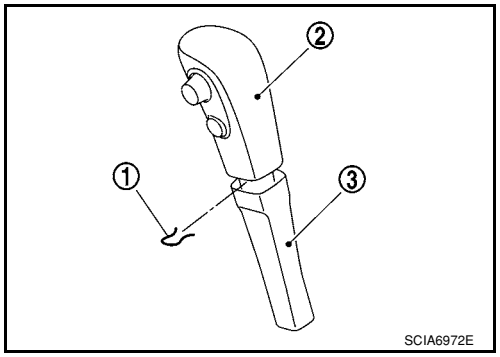

Adjustment of A/T Position

INFOID:0000000001703359

Move selector lever from “P” position to “1” position. You should be able to feel the detents in each position. If the detents cannot be felt or if the position indicator is improperly aligned, the control cable needs adjustment.
CAUTION:
Make sure that parking brake is applied before adjustment.

1. Remove the air duct assembly. Refer to EM-16.
2. Remove the control cable nut (A) and control cable (1) and place the manual lever (2) in the "P' position.
3. Place selector lever in “P” position.
4. Hold control cable (1) at the end and pull it with a force of 9.8 N (approximately 1 kg, 2.2 lb). Release the control cable and temporarily tighten control cable nut (A).
5. Tighten control cable nut (A) to the specified torque.

   Control cable nut **: Refer to AT-203, "Control Device Removal and Installation".**

   CAUTION:
   Secure manual lever when tightening nut.

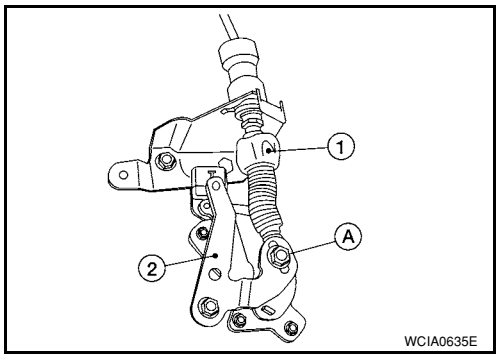

6. Move selector lever from “P” to “1” position again. Make sure that selector lever moves smoothly.
7. Check A/T position. Refer to AT-207, "Checking of A/T Position".
8. Install air duct assembly. Refer to EM-16.

Checking of A/T Position

INFOID:0000000001703360

1. Place selector lever in “P” position, and turn ignition switch ON (Do not start engine).
2. Make sure selector lever can be shifted to other than “P” position when brake pedal is depressed. Also make sure selector lever can be shifted from “P” position only when brake pedal is depressed.
3. Move selector lever and check for excessive effort, sticking, noise or rattle.
4. Confirm selector lever stops at each position with the feel of engagement when it is moved through all the positions. Check whether or not the actual position selector lever is in matches the position shown by the shift position indicator and the transaxle.

5. The method of operating selector lever to individual positions correctly should be as shown.
   - (A): Press selector button to operate selector lever, while depressing the brake pedal.
   - (B): Press selector button to operate selector lever.
   - (C): Selector lever can be operated without pressing selector button.
6. Confirm back-up lamps illuminate only when selector lever is placed in “R” position. Confirm back-up lamps do not illuminate when selector lever is in “P” or “N” position even if it is pushed toward “R” position without pressing selector button.
7. Confirm engine can only be started with selector lever in “P” and “N” positions.
8. Make sure A/T is locked completely in “P” position.

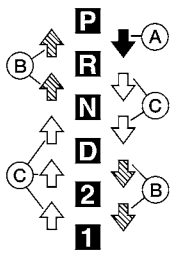

WCIA0636E

A/T SHIFT LOCK SYSTEM

Description

INFOID:0000000001703361

- The mechanical key interlock mechanism also operates as a shift lock:
  With the ignition switch turned to ON, selector lever cannot be shifted from “P” position to any other position unless brake pedal is depressed.
  With the key removed, selector lever cannot be shifted from “P” position to any other position.
  The key cannot be removed unless selector lever is placed in “P” position.
- The shift lock and key interlock mechanisms are controlled by the ON-OFF operation of the shift lock solenoid and by the operation of the rotator and slider located inside key cylinder, respectively.

Shift Lock System Parts Location

INFOID:0000000001703362

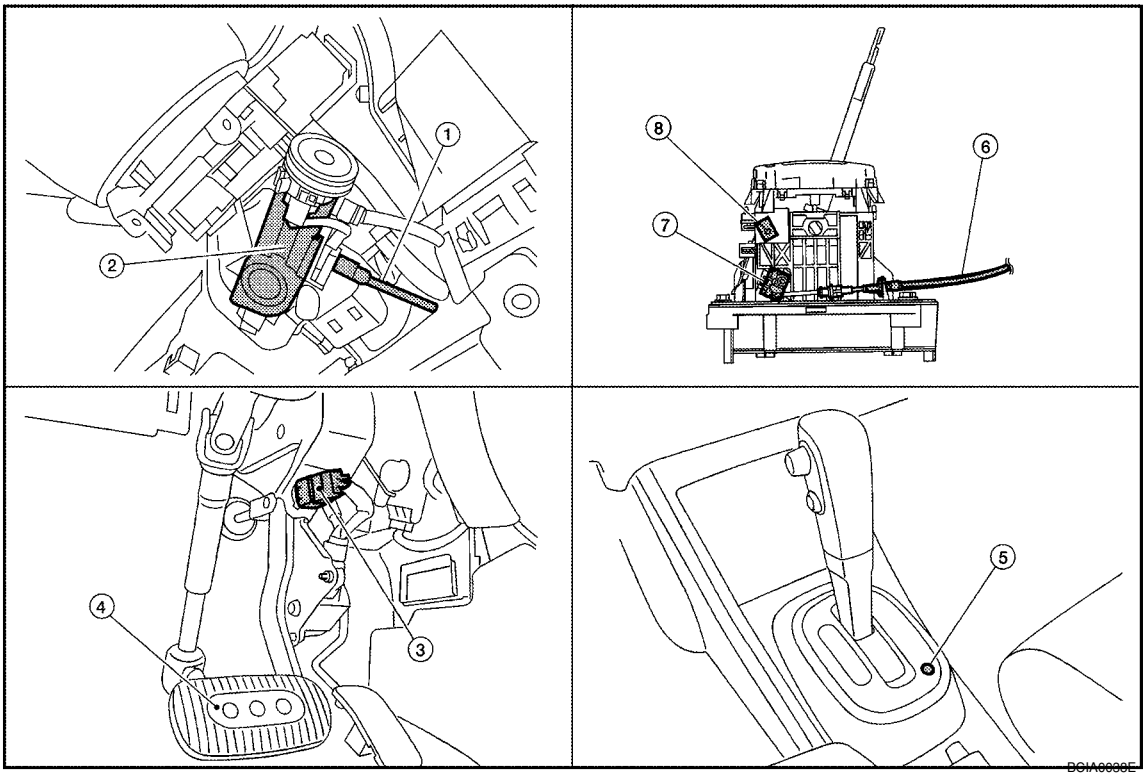

1. Key interlock cable
2. Key cylinder
3. Stop lamp switch
4. Brake pedal
5. Shift lock release button
6. Key interlock cable
7. Shift lock solenoid
8. Park position switch

Wiring Diagram - AT - SHIFT

INFOID:0000000001703363

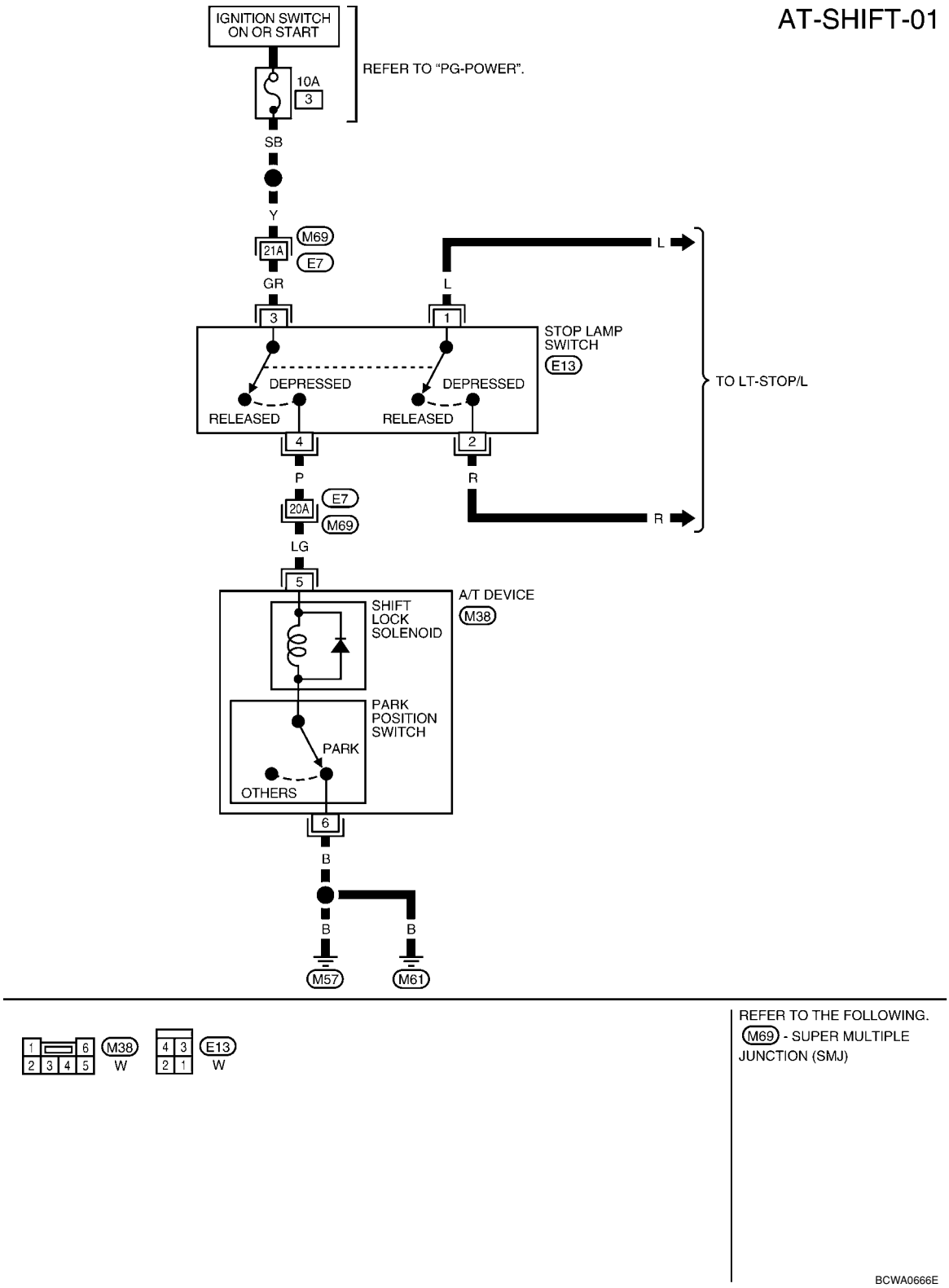

Diagnosis Procedure

INFOID:0000000001703364

SYMPTOM 1:

- **Selector lever cannot be moved from "P" position with ignition switch in ON position and brake pedal depressed.**

- **Selector lever can be moved from “P” position with ignition key in ON position and brake pedal released.**
- **Selector lever can be moved from “P” position when ignition switch is removed from key cylinder.**

SYMPTOM 2:

- **Ignition key cannot be removed when selector lever is set to “P” position.**
- **Ignition key can be removed when selector lever is set to any position except “P” position.**

1. CHECK KEY INTERLOCK CABLE

Check key interlock cable for damage.

OK or NG

OK >> GO TO 2.
NG >> Repair key interlock cable. Refer to AT-213, "Removal and Installation" .

2. CHECK A/T POSITION

Check A/T position. Refer to AT-207, "Checking of A/T Position" .

OK or NG

OK >> GO TO 3.
NG >> Adjust control cable. Refer to AT-207, "Adjustment of A/T Position" .

3. CHECK SHIFT LOCK SOLENOID AND PARK POSITION SWITCH

1. Turn ignition switch ON. (Do not start engine.)
2. Selector lever is set in “P” position.
3. Check operation sound.

Condition	Brake pedal	Operation sound
When ignition switch is turned to ON position and selector lever is set in “P” position.	Depressed	Yes
	Released	No

OK or NG

OK >> **INSPECTION END**
NG >> GO TO 4.

4. CHECK POWER SOURCE

1. Turn ignition switch ON. (Do not start engine.)
2. Check voltage between A/T device harness connector terminal 5 and ground.

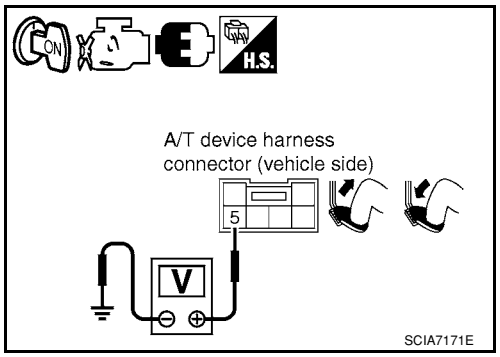

Voltage:

Brake pedal depressed: Battery voltage

Brake pedal released: 0V

OK or NG

OK >> GO TO 7.
NG >> GO TO 5.

5. CHECK STOP LAMP SWITCH

1. Turn ignition switch OFF.
2. Disconnect stop lamp switch harness connector.

3. Check continuity between stop lamp switch harness connector terminals 3 and 4.

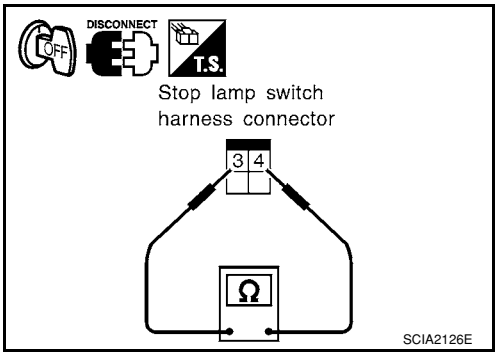

Condition	Continuity
When brake pedal is depressed	Yes
When brake pedal is released	No

Check stop lamp switch after adjusting brake pedal. Refer to BR-5 .

OK or NG

OK >> GO TO 6.
NG >> Repair or replace damaged parts.

6. DETECT MALFUNCTIONING ITEM

Check the following. If any items are damaged, repair or replace damaged parts.
- Harness for short or open between ignition switch and stop lamp switch harness connector
- Harness for short or open between stop lamp switch harness connector and A/T device harness connector
- 10A fuse [No.3, located in the fuse block (J/B)]
- Ignition switch, Refer to PG-3 .

OK or NG

OK >> **INSPECTION END**
NG >> Repair or replace damaged parts.

7. CHECK GROUND CIRCUIT

1. Turn ignition switch OFF.
2. Disconnect A/T device harness connector.
3. Check continuity between A/T device harness connector terminal 6 and ground.

Continuity should exist.

4. Connect A/T device harness connector.

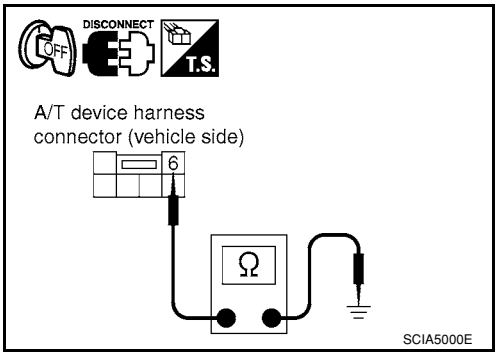

OK or NG

OK >> Replace shift lock solenoid and park position switch assembly.
NG >> Repair open circuit or short to ground or short to power in harness or connectors.

KEY INTERLOCK CABLE

Removal and Installation

INFOID:0000000001703365

COMPONENTS

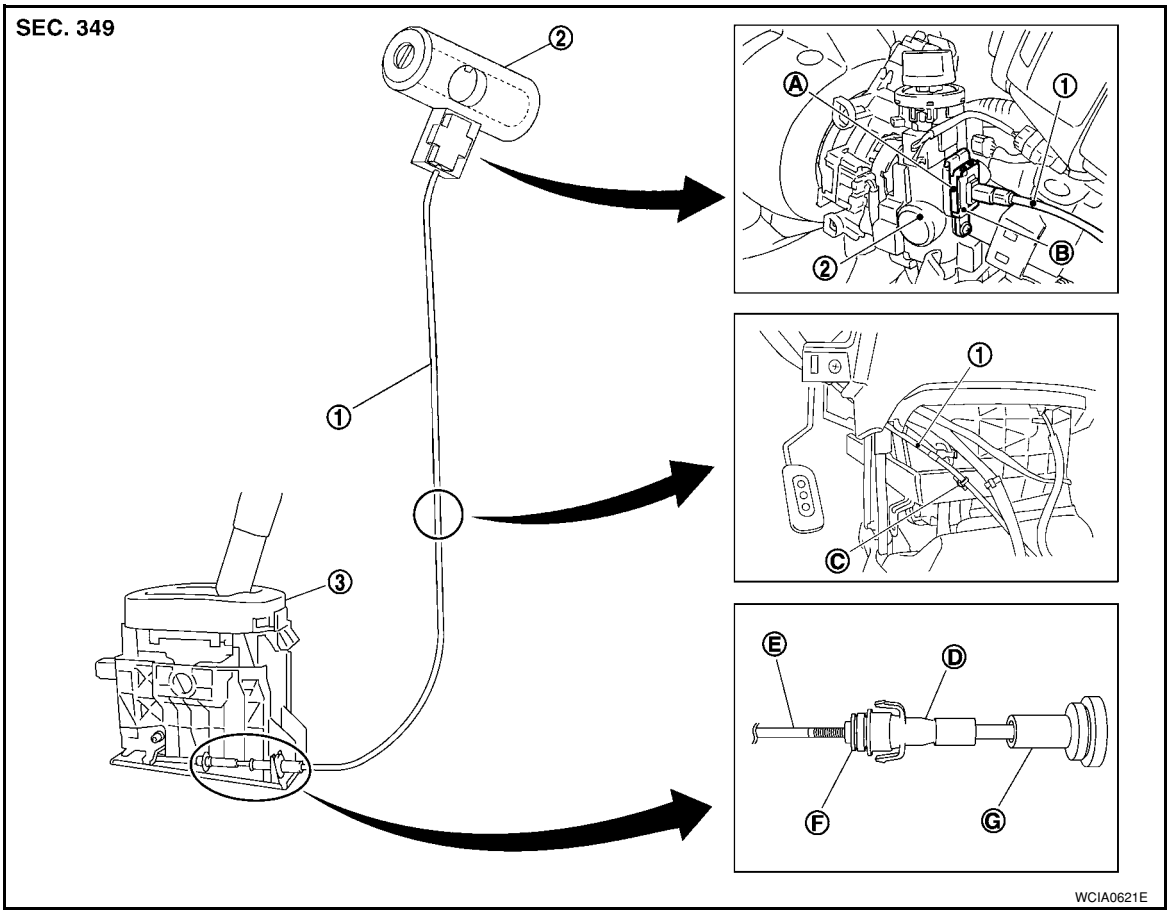

1. Key interlock cable	2. Key cylinder	3. Control device assembly
A. Lock plate	B. Holder	C. Clip
D. Slider	E. Key interlock rod	F. Adjust holder
G. Casing cap		

REMOVAL

CAUTION:

Make sure that parking brake is applied before removal and installation.

1. Place the selector lever in the “N” position.
2. Remove the selector lever knob. Refer to AT-206, "Selector Lever Knob Removal and Installation".
3. Remove the center console assembly. Refer to IP-10.
4. Slide the slider (A) toward the casing cap (B) while pressing tabs (C) on the slider to separate the slider (A) from the adjust holder (D).
5. Remove the casing cap (B) from the cable bracket on the control device assembly.
6. Remove the key interlock cable from the key interlock rod (E).

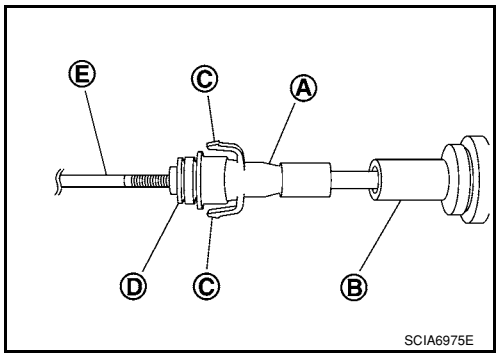

7. Remove steering column cover (upper and lower) and instrument lower finisher. Refer to IP-10.
8. Pull out the lock plate (A) from the holder (B).
9. Remove the key interlock cable (1) from the key cylinder (2).

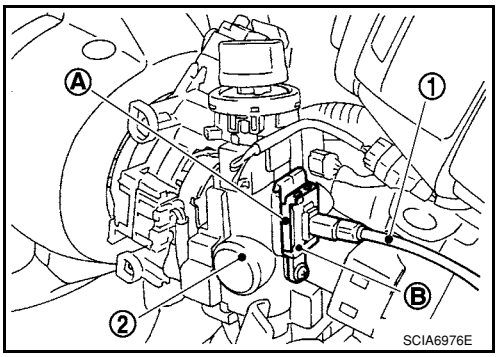

10. Remove the clip (A), and then remove the key interlock cable (1).

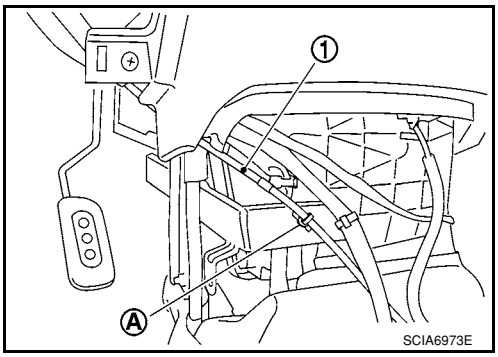

INSTALLATION

CAUTION:

- **Install key interlock cable in such a way that it will not be damaged by sharp bends, twists or interference with adjacent parts.**
- **After installing key interlock cable to control device assembly, make sure that casing cap and bracket are firmly secured in their positions.**

1. Place the selector lever in the “P” position.
2. Turn ignition switch to “ACC” or “ON” position.
3. Set the key interlock cable (1) to the key cylinder (2).
4. Install the lock plate (A) to the holder (B).
5. Turn ignition switch to “LOCK” position.

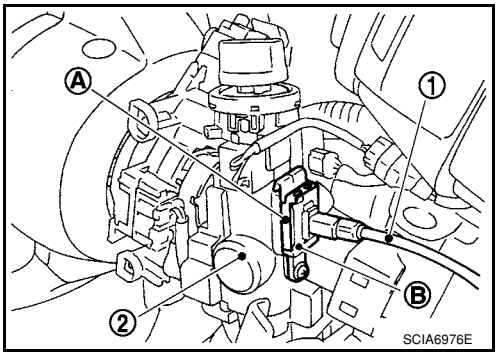

6. Temporarily install the adjust holder (A) to the key interlock rod (B).
7. Install the casing cap (C) to the cable bracket (D) on the control device assembly.

   CAUTION:
   - **Do not bend or twist key interlock cable excessively when installing.**
   - **After installing key interlock cable to cable bracket (D) on control device assembly, make sure casing cap (C) is firmly secured in cable bracket (D) on control device assembly.**
   - **If casing cap (C) is loose [less than 39.2 N (4.0 kg, 8.8 lb) removing force], replace key interlock cable.**

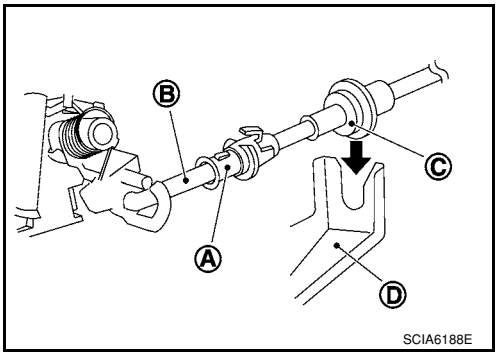

8. Slide the slider (A) toward the key interlock rod (D) while pressing the pull lock (B) down to securely connect the adjust holder (C) with the key interlock rod (D).
   CAUTION:
   - **Do not press tabs when holding slider (A).**
   - **Do not apply any side to side force to key interlock rod (D) when sliding slider (A).**

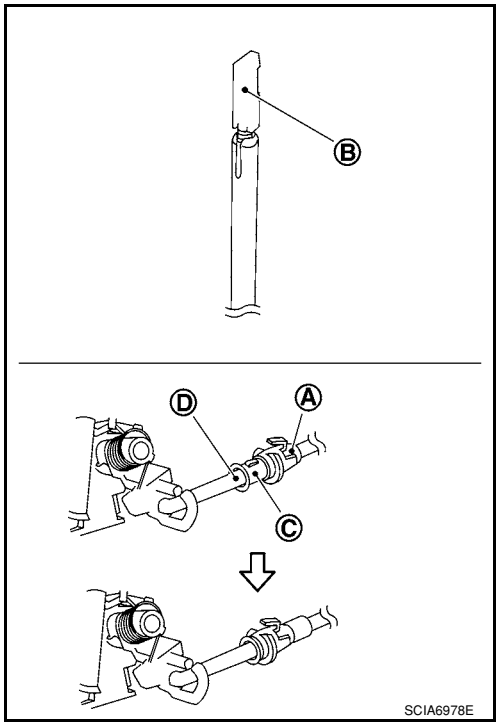

9. Secure the key interlock cable (1) with the clip (A).
10. Install steering column cover (upper and lower) and instrument lower finisher. Refer to IP-10.
11. Install the center console assembly. Refer to IP-10.
12. Install the selector lever knob. Refer to AT-206, "Selector Lever Knob Removal and Installation".
13. Check shift lock system. Refer to AT-209, "Description".

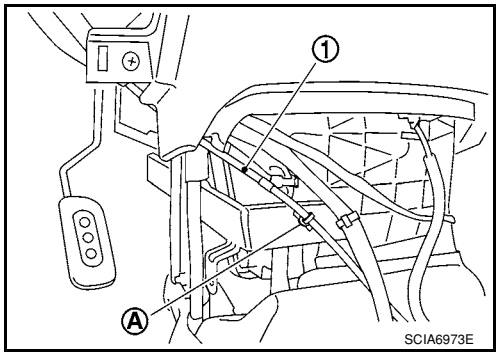

ON-VEHICLE SERVICE

Control Valve Assembly and Accumulators

INFOID:0000000001703366

COMPONENTS

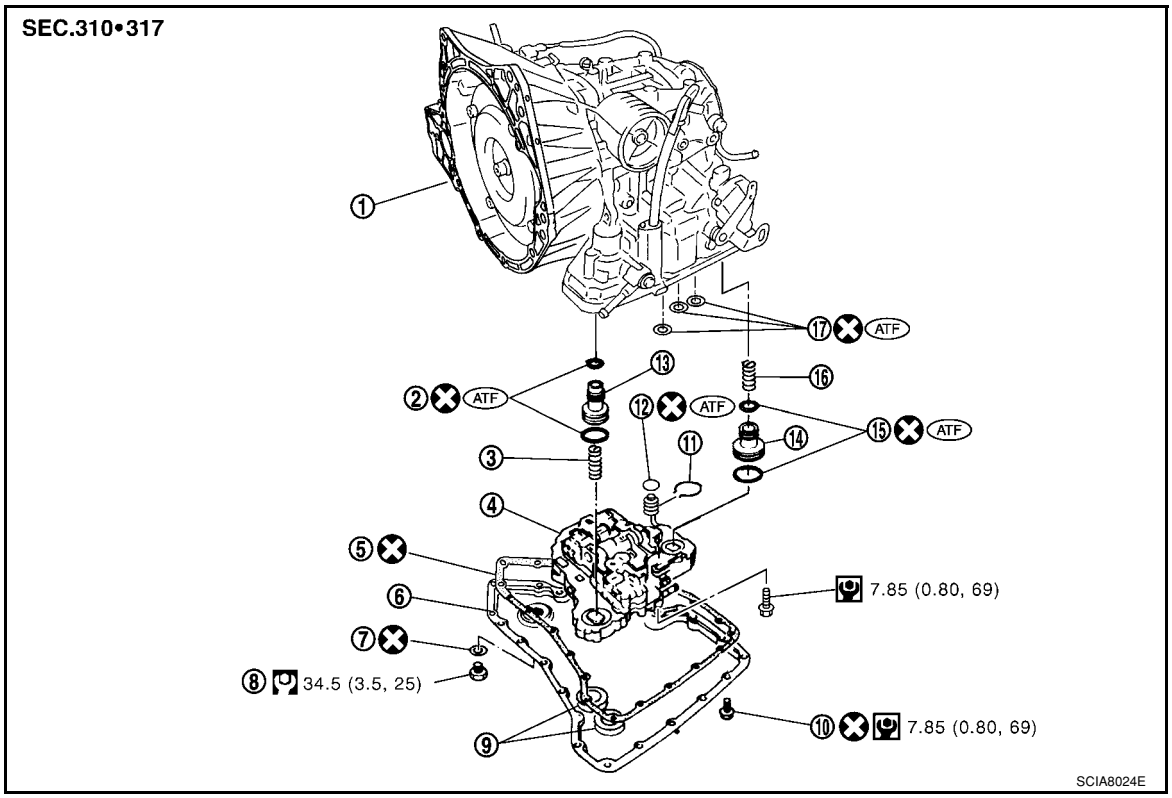

1. A/T	2. O-ring	3. Return spring
4. Control valve assembly	5. Oil pan gasket	6. Oil pan
7. Drain plug gasket	8. Drain plug	9. Magnet
10. Oil pan fitting bolt	11. Snap ring	12. O-ring
13. Servo release accumulator piston	14. N-D accumulator piston	15. O-ring
16. Return spring	17. Lip seal	

REMOVAL AND INSTALLATION

Removal

1. Disconnect the battery negative terminal.
2. Remove engine under cover and fender protector (LH). Refer to EI-23, "Removal and Installation".
3. Drain the A/T fluid. Refer to AT-15.
4. Remove oil pan and oil pan gasket.
5. Check for foreign materials in oil pan to help determine cause of malfunction. If the ATF is very dark, smell burned or contains foreign particles, friction material (clutches, band) may need replacement. A tacky film that will not wipe clean indicates varnish build up. Varnish can cause valves, servo, and clutches to stick and can inhibit pump pressure.
   - **If ATF contains frictional material (clutch, bands, etc.), replace radiator and flush cooler line using cleaning solvent and compressed air after repair of A/T. Refer to CO-11.**
6. Remove magnets from oil pan.

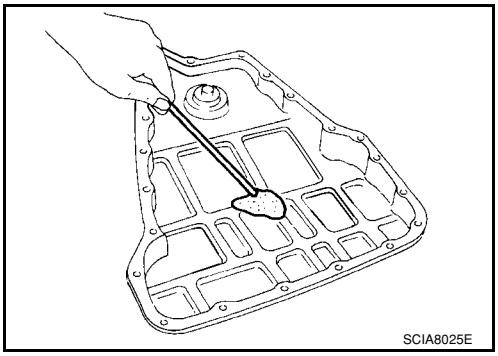

7. Disconnect terminal cord assembly harness connector.
8. Remove snap ring from terminal body.
9. Remove terminal cord assembly by pushing terminal body into transaxle case.

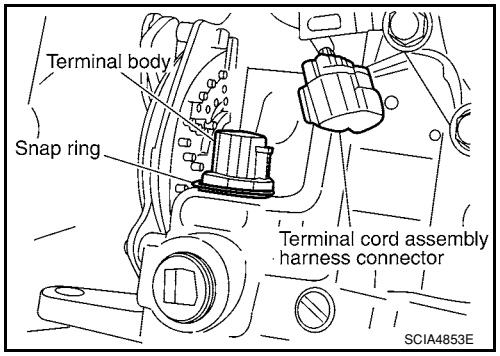

10. Remove control valve assembly bolts (A), (B) and (C).

Bolt length, number and location:

Bolt symbol	A	B	C
Bolt length "ℓ" mm (in) ℓ	40.0 mm (1.575 in)	33.0 mm (1.299 in)	43.5 mm (1.713 in)
Number of bolts	5	6	2

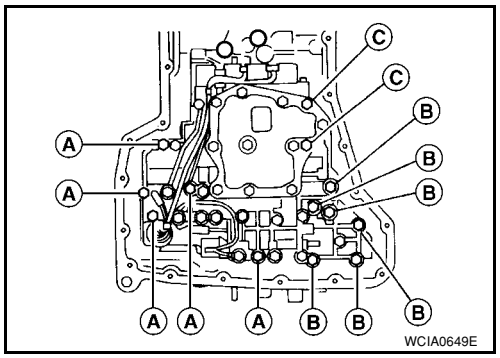

11. Remove control valve assembly from transaxle case.
CAUTION:
Be careful not to drop manual valve and servo release accumulator return spring.
12. Remove manual valve from control valve assembly.
CAUTION:
Be careful not to drop manual valve.
13. Remove O-ring from terminal body.
14. Disassemble and inspect control valve assembly if necessary. Refer to AT-263, "Control Valve Assembly", AT-272, "Control Valve Upper Body" and AT-276, "Control Valve Lower Body".

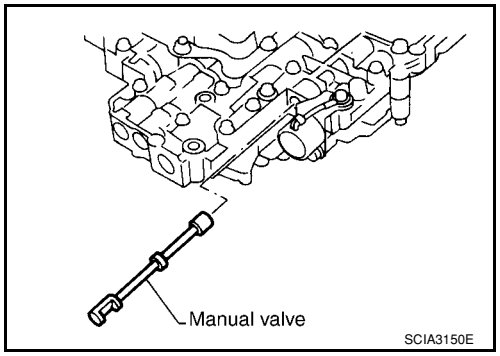

15. Remove servo release accumulator piston and N-D accumulator piston by applying compressed air if necessary.
CAUTION:
Hold each piston with lint-free cloth.

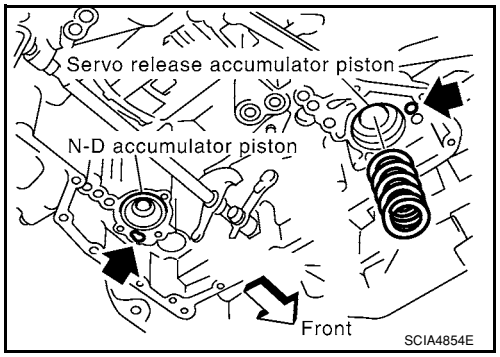

a. Apply compressed air to the oil hole as shown, and remove servo release accumulator piston from transaxle case.
CAUTION:
Strong flow of air will push the accumulator piston out along with a splash of ATF. To avoid this cover the area with lint-free cloth and blow air little by little.

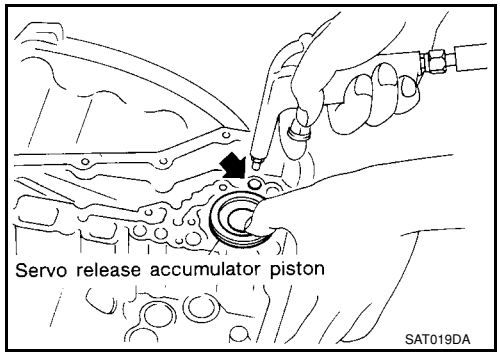

b. Apply compressed air to the oil hole as shown, and remove N-D accumulator piston and return spring from transaxle case.
CAUTION:
Strong flow of air will push the accumulator piston out along with a splash of ATF. To avoid this cover the area with lint-free cloth and blow air little by little.

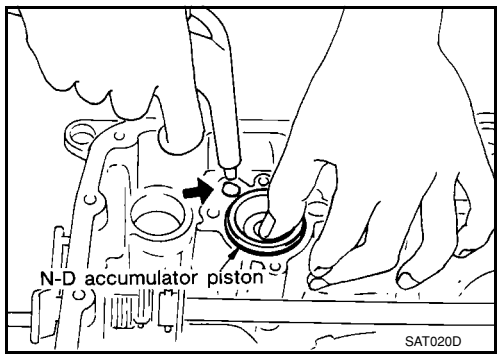

c. Remove O-rings (1) from servo release accumulator piston (2) and N-D accumulator piston (3).
CAUTION:
Wrap the removed servo release accumulator piston (2) and N-D accumulator piston (3) in a lint-free cloth.

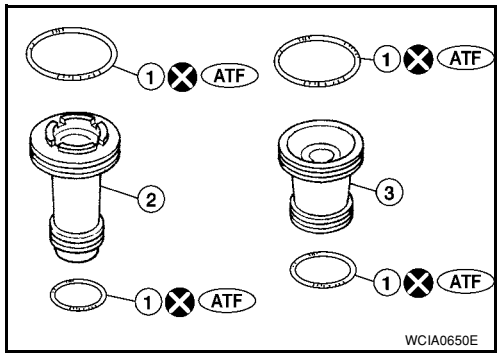

16. Remove lip seals (1) from transaxle case.

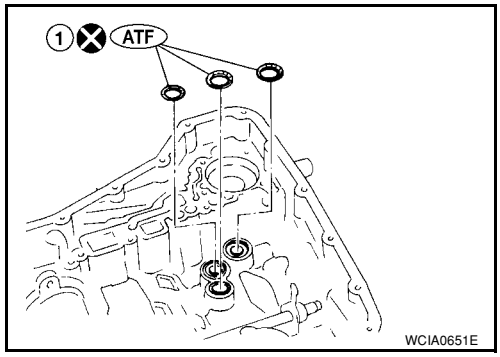

Inspection
- Inspect the sliding surfaces of each accumulator piston and transaxle case, and replace if damaged or dented.
  (1): Servo release accumulator piston
  (2): N-D accumulator piston
- Inspect the sliding surfaces of manual valve and valve body, and replace if damaged or dented.

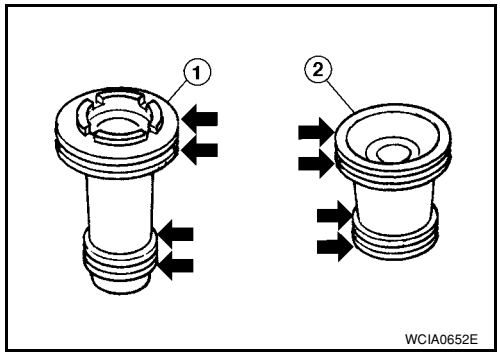

- Inspect each return spring, and replace if damaged, deformed or worn. Refer to AT-343, "Accumulator" for free length (L_1) and length (L_2).
  (1): Return spring (Servo release accumulator)
  (2): Return spring (N-D accumulator)
  CAUTION:
  Do not remove spring retainer (3).

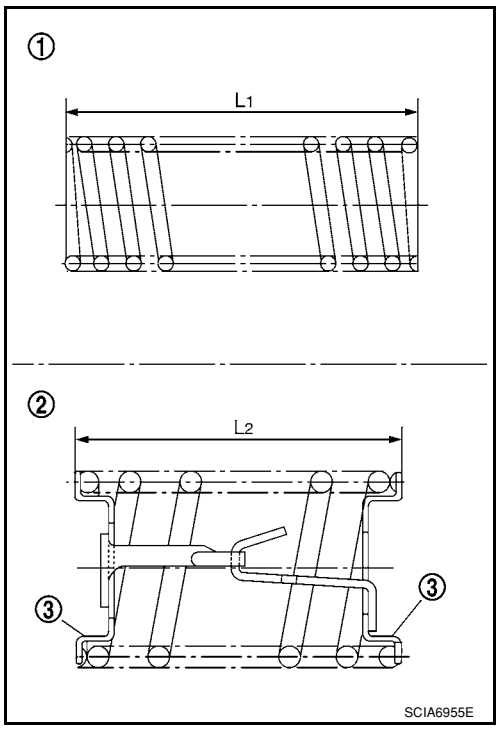

Installation
Installation is in the reverse order of removal.
CAUTION:
- **Completely remove all moisture, oil and old gasket from the oil pan gasket mounting surface of transaxle case and oil pan.**
- **Do not reuse O-rings, lip seals, oil pan gasket and oil pan bolts.**
- **Apply ATF to manual valve, O-rings, lip seals and sliding surfaces of the transaxle case.**

NOTE:
- Set manual shaft in “N” position, then align manual plate (1) with groove in manual valve (2).
- After installing control valve assembly to transaxle case, make sure that selector lever can be moved to all positions.
- After completing installation, check for A/T fluid leakage and A/T fluid level. Refer to MA-22, "Checking A/T Fluid".

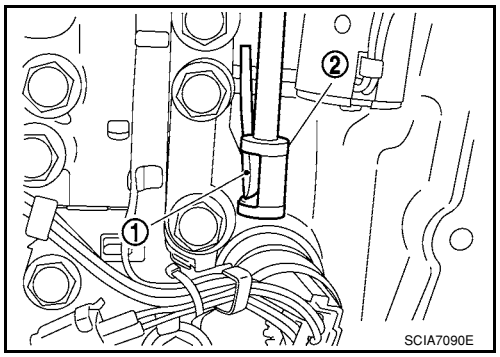

Park/Neutral Position (PNP) Switch

INFOID:0000000001703367

COMPONENTS

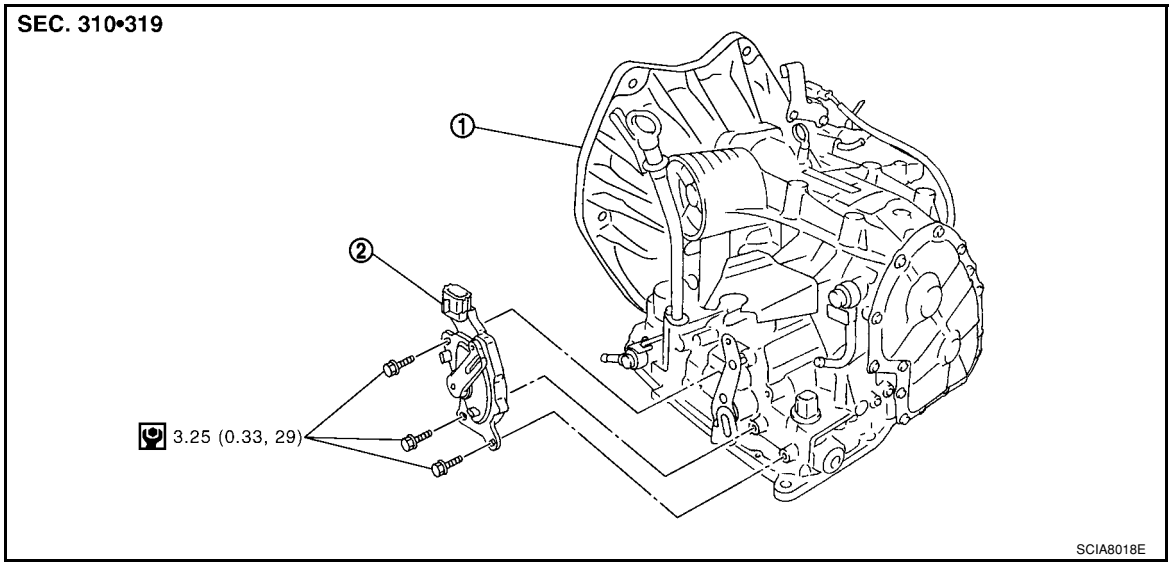

1. A/T
2. PNP switch

REMOVAL AND INSTALLATION

Removal

1. Disconnect the battery negative terminal.
2. Remove air duct (inlet). Refer to EM-16.
3. Remove control cable (1) from manual shaft. Refer to AT-203, "Control Device Removal and Installation".
4. Disconnect PNP switch harness connector (2).
5. Remove PNP switch bolts.
6. Set manual shaft in “P” position.
7. Remove PNP switch from A/T.

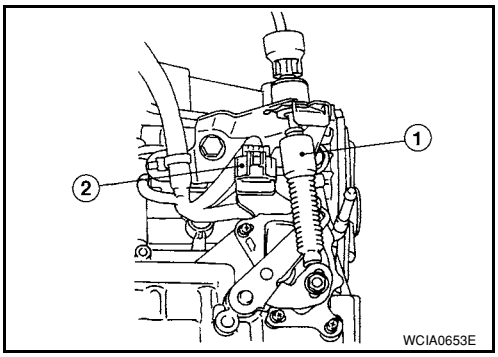

Installation

Installation is in the reverse order of removal.

NOTE:

- Align PNP switch position when installing.
- After installation is completed, adjust and check the PNP switch and A/T position. Refer to "PARK/NEUTRAL POSITION (PNP) SWITCH ADJUSTMENT", AT-207, "Adjustment of A/T Position" and AT-207, "Checking of A/T Position".
- After installation is completed, check continuity of PNP switch. Refer to AT-171, "Component Inspection".

PARK/NEUTRAL POSITION (PNP) SWITCH ADJUSTMENT

1. Remove air duct (inlet). Refer to EM-16.

2. Set selector lever and manual shaft (1) in “N” position.
3. Remove control cable from manual shaft (1). Refer to AT-203, "Control Device Removal and Installation".
4. Loosen PNP switch bolts.
   ⬅:Bolt (3)
5. Insert the pin (3) [4 mm (0.16 in) dia.] straight into manual shaft (1) adjustment hole.
6. Rotate PNP switch (2) until the pin (3) can also be inserted straight into hole in PNP switch (2).
7. Tighten PNP switch bolts to the specified torque. Refer to "COMPONENTS".

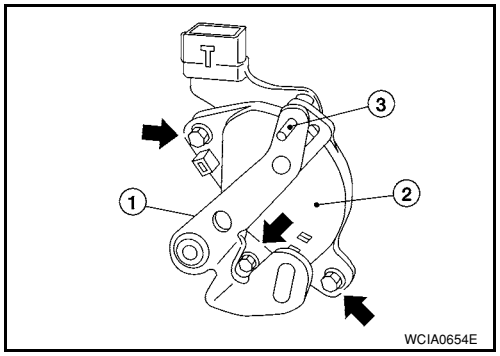

8. Remove the pin (3) from adjustment hole after adjusting PNP switch (2).
9. Install the control cable. Refer to AT-203, "Control Device Removal and Installation".
10. Adjust and check A/T position. Refer to AT-207, "Adjustment of A/T Position" and AT-207, "Checking of A/T Position".
11. Check continuity of PNP switch (2). Refer to AT-171, "Component Inspection".
12. Install the air duct (inlet). Refer to EM-16.

Revolution Sensor

INFOID:0000000001703368

COMPONENTS

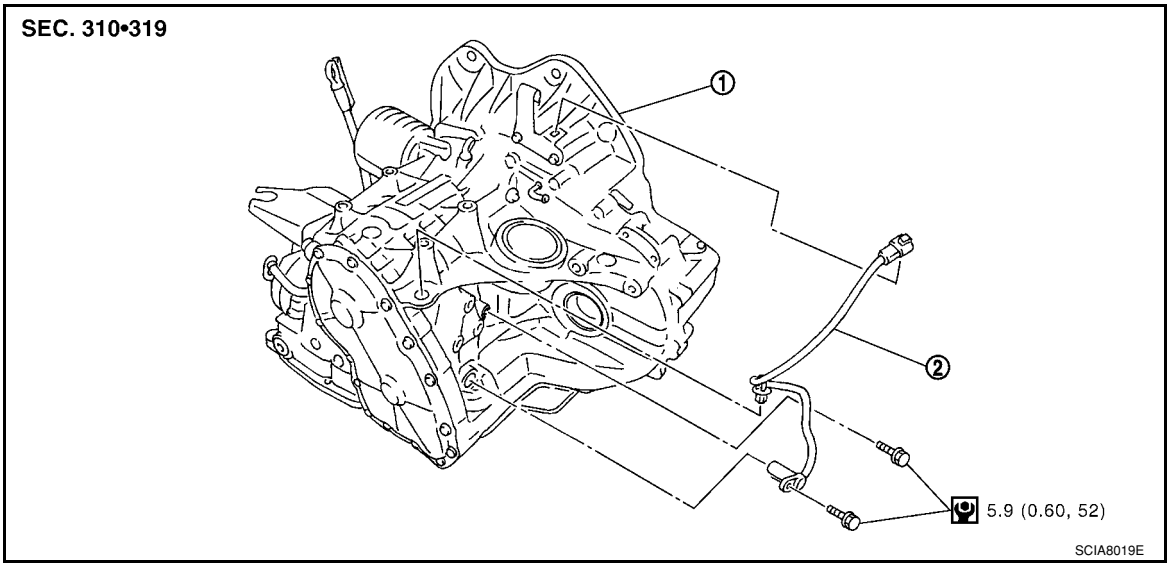

1. A/T
2. Revolution sensor

REMOVAL AND INSTALLATION

Removal

1. Disconnect the battery negative terminal.
2. Remove air duct (inlet), air duct and air cleaner case. Refer to EM-16.

3. Disconnect revolution sensor harness connector.
4. Remove clip (A).
5. Remove revolution sensor (1) from A/T.
   ⬅: Bolt (2)
6. Remove O-ring from revolution sensor (1)

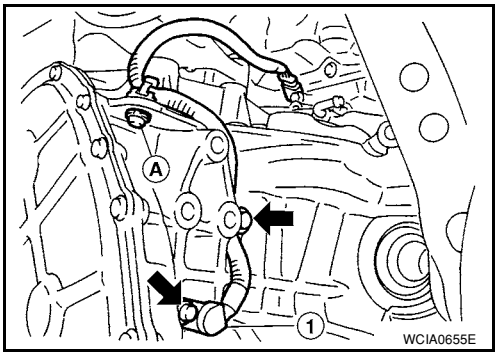

Installation
Installation is in the reverse order of removal.
CAUTION:
- **Do not reuse O-ring.**
- **Apply ATF to O-ring.**
- **Ensure revolution sensor harness is firmly secured with bolt.**
  (1): Revolution sensor
  ⬅: Bolt (1)

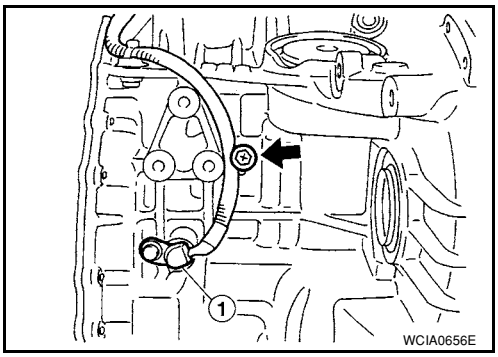

Turbine Revolution Sensor (Power Train Revolution Sensor)

INFOID:0000000001703369

COMPONENTS

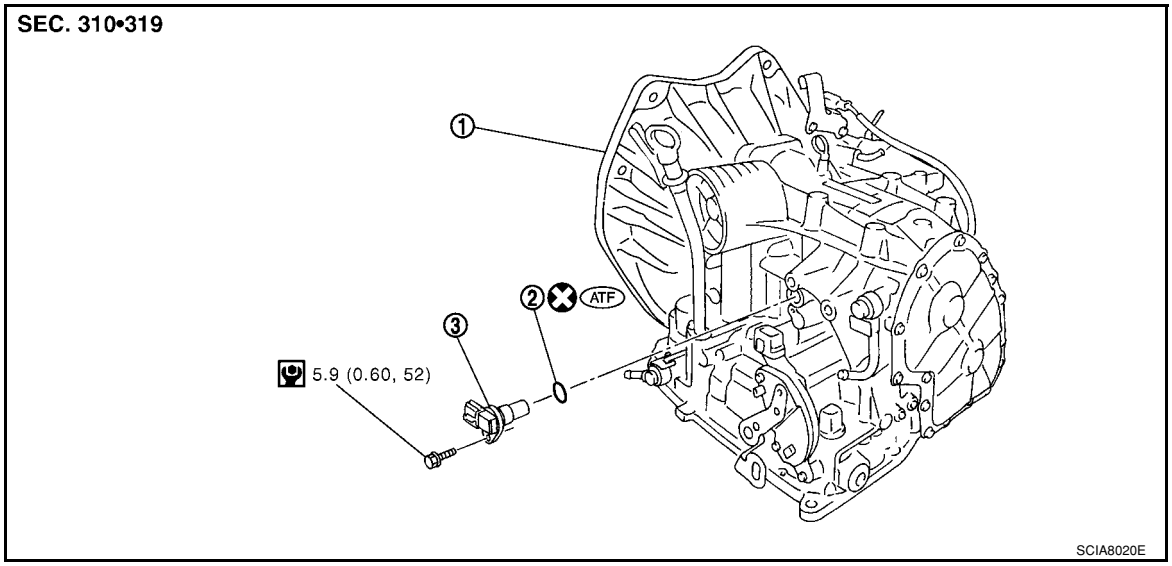

1. A/T
2. O-ring
3. Turbine revolution sensor (power train revolution sensor)

REMOVAL AND INSTALLATION

Removal
1. Disconnect the battery negative terminal.
2. Remove air duct (inlet). Refer to EM-16.

3. Disconnect turbine revolution sensor (power train revolution sensor) harness connector (1).
4. Remove turbine revolution sensor (power train revolution sensor) bolt.
   ⬅: Bolt (1)
5. Remove turbine revolution sensor (power train revolution sensor) (2) from A/T.
6. Remove O-ring from turbine revolution sensor (power train revolution sensor) (2).

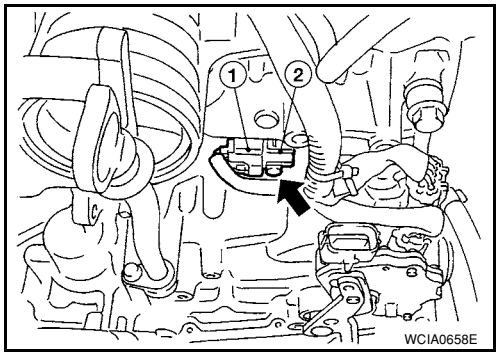

Installation

Installation is in the reverse order of removal.

CAUTION:

- **Do not reuse O-ring.**
- **Apply ATF to O-ring.**

Differential Side Oil Seal

INFOID:0000000001703370

COMPONENTS

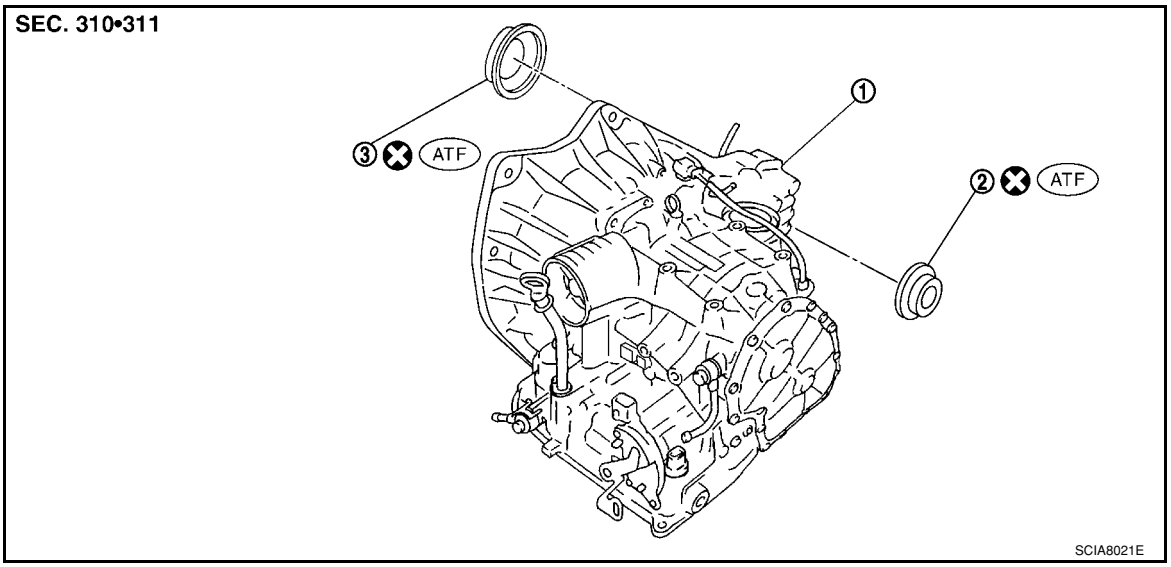

1. A/T
2. LH differential side oil seal
3. RH differential side oil seal

REMOVAL AND INSTALLATION

Removal

1. Remove front drive shaft. Refer to FAX-8.
2. Remove differential side oil seals using a flat-bladed screwdriver.
   CAUTION:
   Be careful not to scratch transaxle case and converter housing.

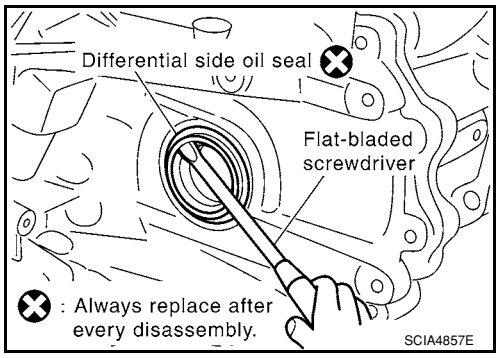

Installation

Installation is in the reverse order of removal.

NOTE:

- Drive each differential side oil seal evenly using a drift (SST and commercial service tool) so that differential side oil seal protrudes by the dimension “C” or “D” respectively.
  (1): LH differential side oil seal
  (2): RH differential side oil seal
  (A): Transaxle case side
  (B): Converter housing side

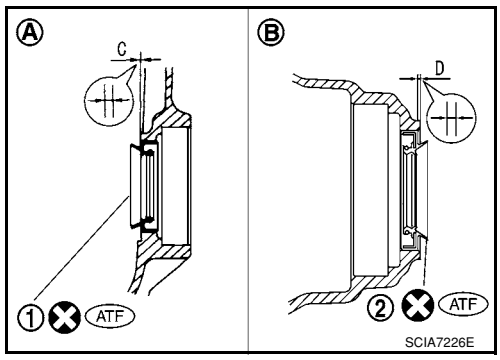

Unit: mm (in)

Dimension “C”	0 ± 0.5 (0 ± 0.020)
Dimension “D”	6 ± 0.5 (0.043 ± 0.020)

- Differential side oil seal pulling direction is used as the reference.

Drift to be used:

Location	Tool number
Transaxle case side (A)	ST35325000 (–) KV31103000 (J-38982)
Converter housing side (B)	Commercial service tool [Inner diameter: 47 mm (1.85 in), outer diameter: 54 mm (2.13 in)]

- After installing differential side oil seal, check A/T fluid leakage and A/T fluid level. Refer to MA-22, "Checking A/T Fluid".

AIR BREATHER HOSE

Removal and Installation

INFOID:0000000001703371

COMPONENTS

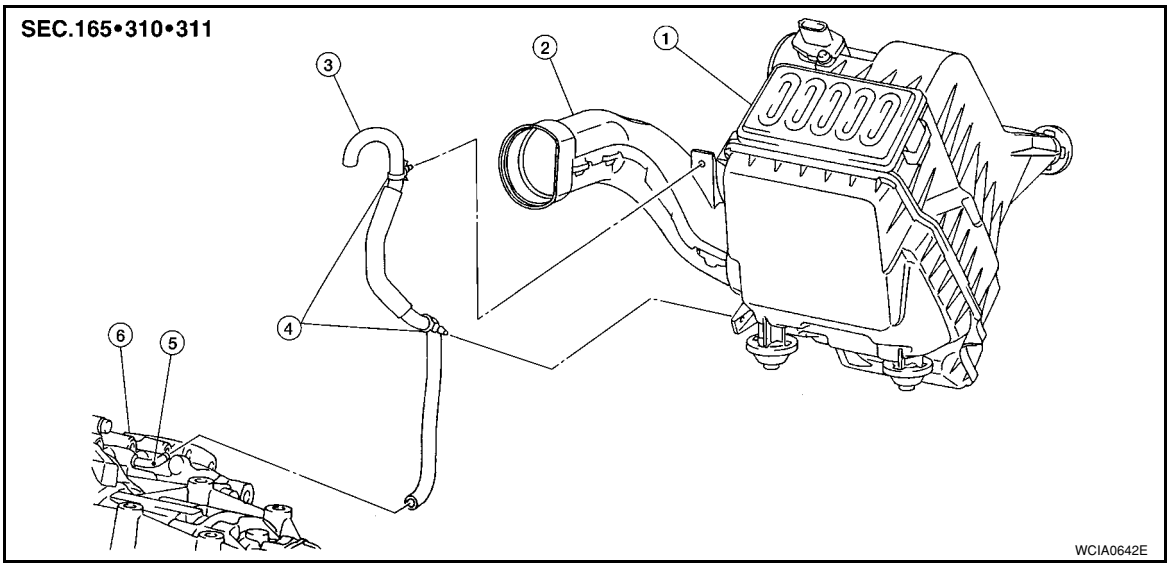

1.	Air cleaner case	2.	Air duct	3.	Air breather hose
4.	Clip	5.	Air breather tube	6.	A/T

REMOVAL

1. Remove air duct (inlet), air duct and air cleaner case. Refer to EM-16.
2. Remove air breather hose.

INSTALLATION

Installation is in the reverse order of removal.

CAUTION:

Make sure air breather hose is not collapsed or blocked due to folding or bending when installed.

NOTE:

- Install the air breather hose (1) to the air breather tube (2) so that the paint mark (A) faces upward. Also make sure the air breather hose end laps with air breather tube 17 mm (0.67 in) or more.
- When installing air breather hose (1) to air duct and air cleaner case, make sure to fully insert the hose clips.

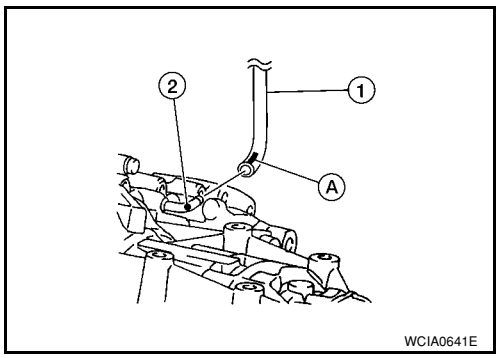

TRANSAXLE ASSEMBLY

Removal and Installation

INFOID:0000000001703372

COMPONENTS

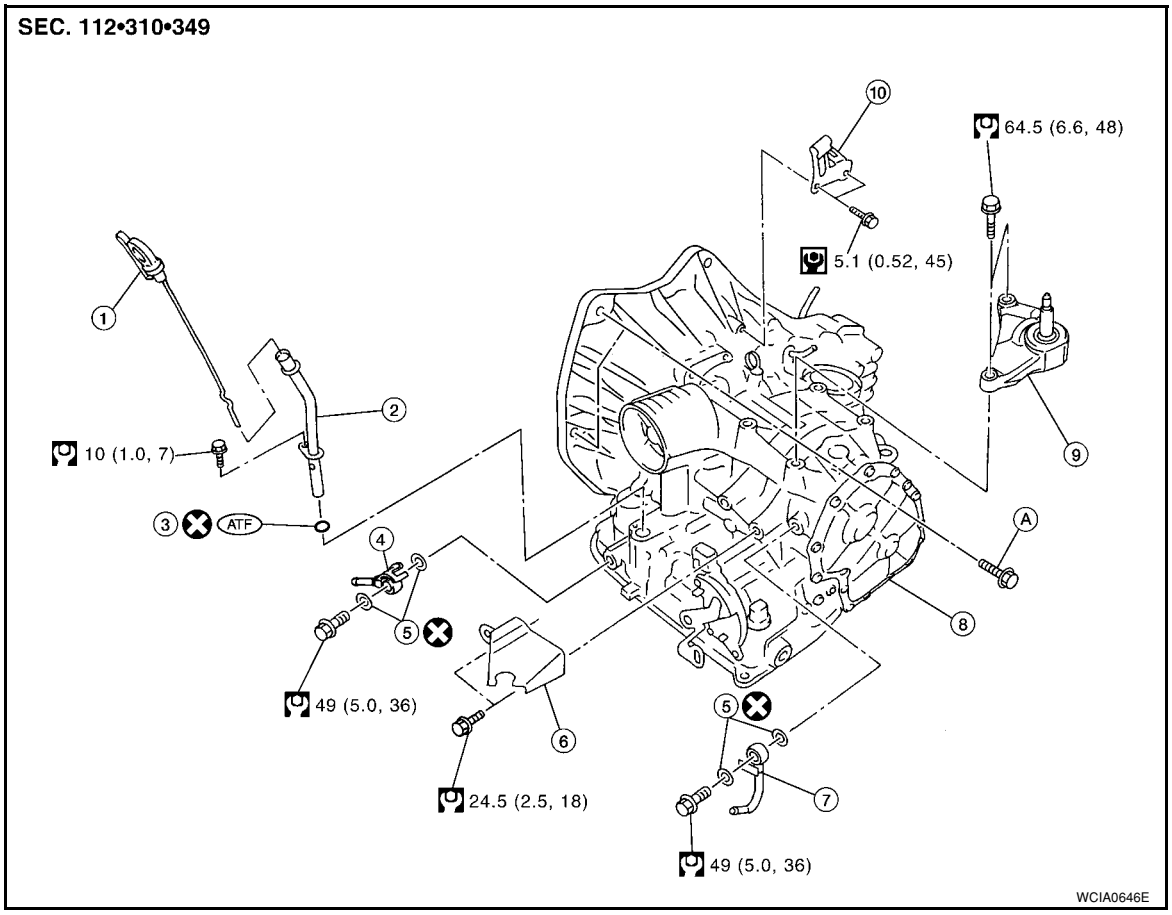

1.	A/T fluid level gauge	2.	A/T fluid charging pipe	3.	O-ring
4.	Fluid cooler tube	5.	Copper washer	6.	Bracket
7.	Fluid cooler tube	8.	A/T assembly	9.	Engine mounting bracket (LH)
10.	Bracket	A.	Refer to "INSTALLATION".		

REMOVAL

1. Remove the engine and transaxle as an assembly. Refer to EM-72, "Removal and Installation".

2. Disconnect the following connectors and remove the wire harness.
   - Turbine revolution sensor (power train revolution sensor) harness connector (1)
   - Terminal cord assembly harness connector (2)
   - PNP switch connector (3)
   - Revolution sensor harness connector (4)

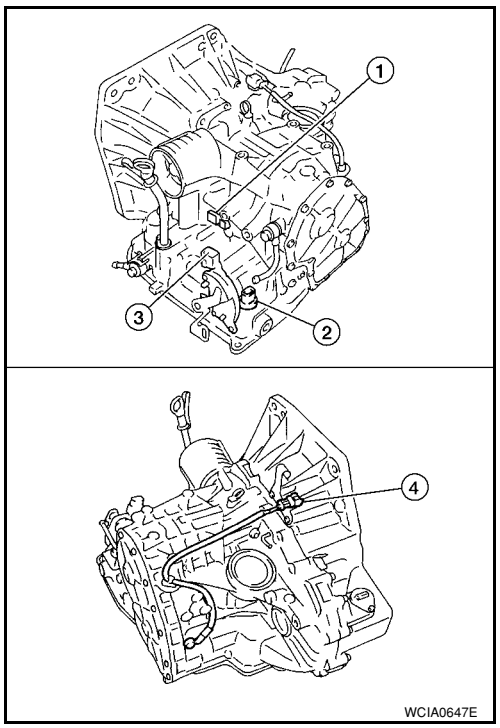

3. Remove the four drive plate to torque converter bolts.
   NOTE:
   Rotate the crankshaft clockwise as viewed from front of engine for access to drive plate to torque converter bolts.

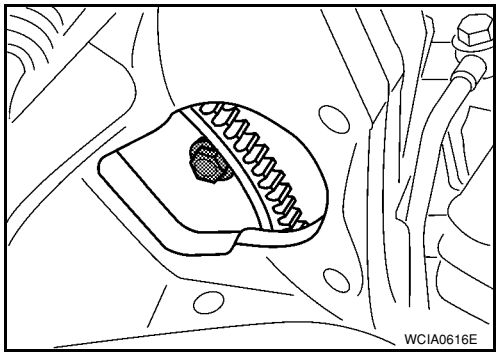

4. Put matching marks on the drive plate and torque converter.
   CAUTION:
   For matching marks, use paint. Never damage the drive plate or torque converter.
5. Remove the transaxle to engine and engine to transaxle bolts.
6. Separate the transaxle from the engine.
   CAUTION:
   Secure torque converter to prevent it from dropping.
7. If necessary, remove the following from the transaxle:
   - Revolution sensor
   - Turbine revolution sensor (powertrain revolution sensor)
   - Fluid cooler tubes (1) and copper washers
   - A/T fluid level gauge (2) and charging pipe (3)
   - PNP switch
   - Air breather hose
   - Engine mounting bracket (LH)
   - Any necessary brackets

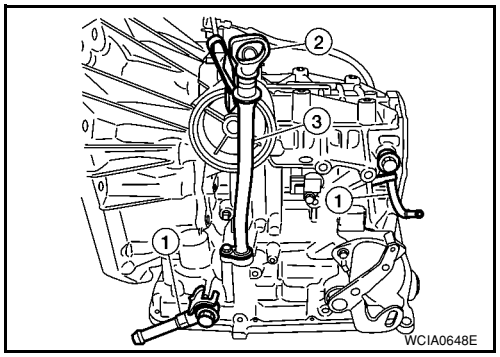

INSTALLATION

Installation is in the reverse order of removal.

CAUTION:

- **When replacing an engine or transmission you must make sure any dowels are installed correctly during re-assembly.**
- **Improper alignment caused by missing dowels may cause vibration, oil leaks or breakage of drive train components.**
- **Do not reuse O-rings and copper washers. Refer to "COMPONENTS".**
- **When turning crankshaft, turn it clockwise as viewed from the front of the engine.**
- **When tightening the bolts for the torque converter while securing the crankshaft pulley bolt, be sure to confirm the tightening torque of the crankshaft pulley bolt. Refer to EM-37.**
- **After converter is installed to drive plate, rotate crankshaft several turns to check that transaxle rotates freely without binding.**
- When installing the torque converter to the transaxle measure distance A.

Dimension A: 14.4 mm (0.567 in) or more

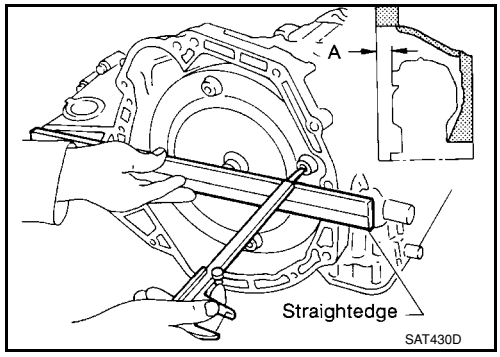

- Check the fitting of the dowel pins when installing the transaxle assembly and the engine assembly.
  ⬅: Dowel pin (2)

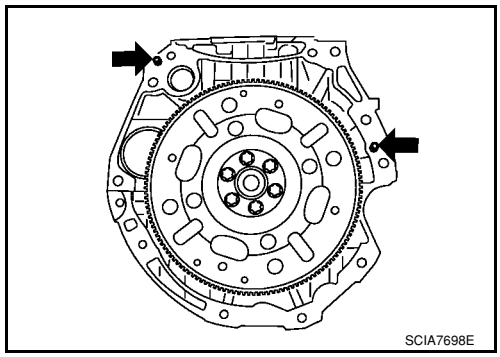

- When installing the transaxle to the engine, align the matching mark on the drive plate with the matching mark on the torque converter.
- When securing the transaxle to the engine, attach the bolts in accordance with the following standard.

Bolt No.	1	2
Number of bolts	2	7
Bolt length “L” [mm (in)]	55 (2.17)	50 (1.97)
Tightening torque [N·m (kg-m, ft-lb)]	62 (6.3, 46)	

(A): A/T to engine
(B): Engine to A/T

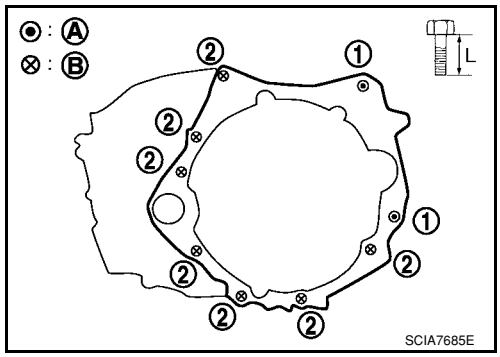

- Align the positions for the bolts on drive plate with those of the torque converter, and temporarily tighten bolts. Then, tighten bolts to the specified torque.

Converter nuts : 51 N·m (5.2 kg-m, 38 ft-lb)

- After completing installation, check for A/T fluid leakage, A/T fluid level and A/T positions. Refer to MA-22, "Checking A/T Fluid" and AT-207, "Checking of A/T Position".

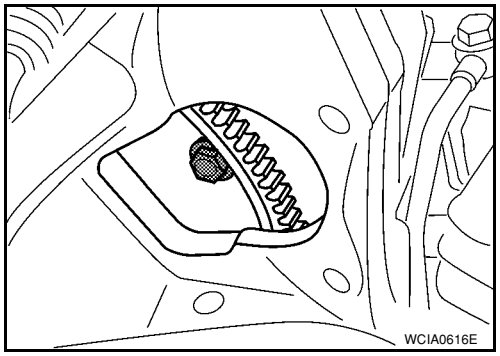

OVERHAUL

Component

INFOID:0000000001703373

With ABS

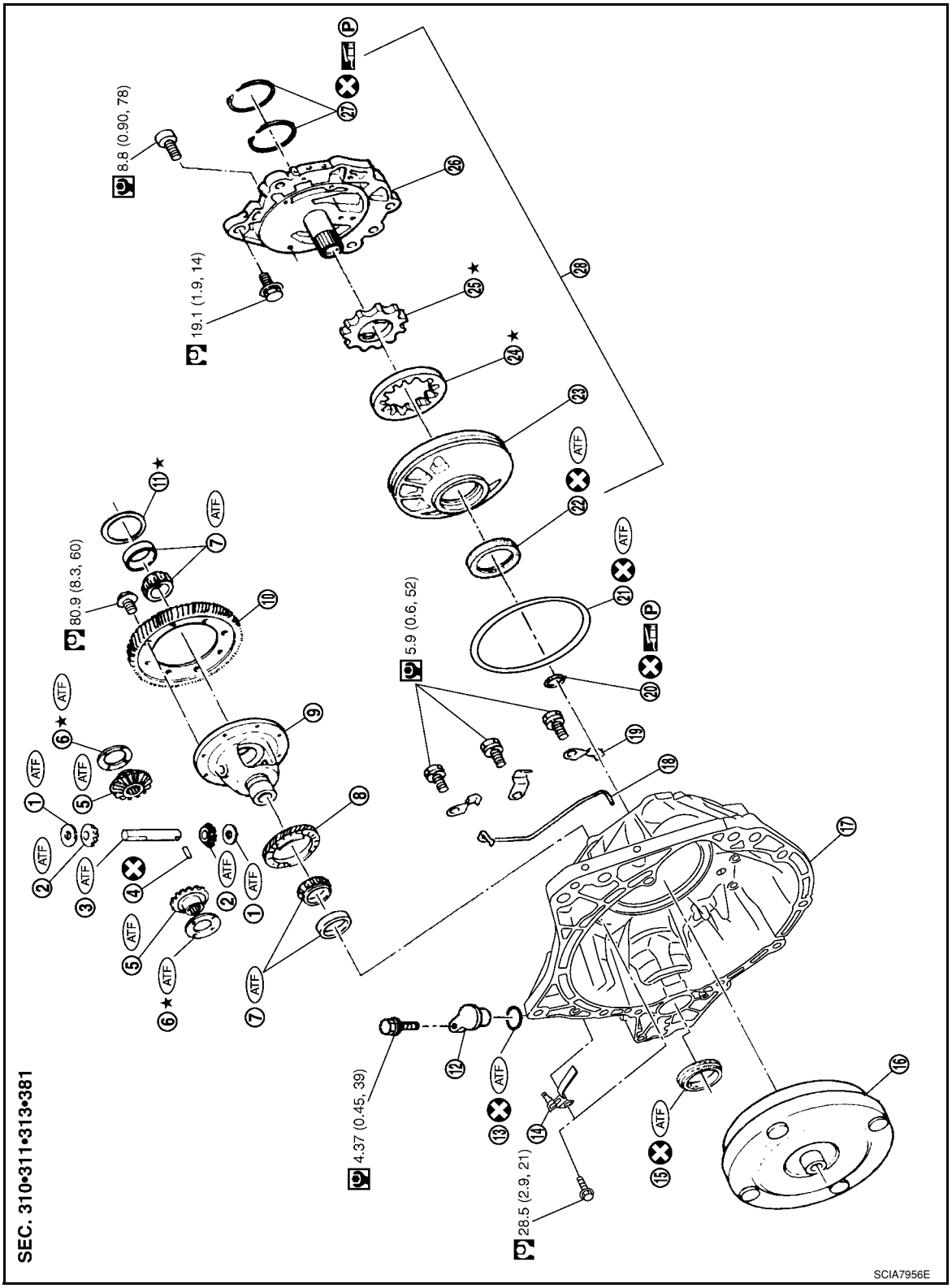

1. Pinion mate gear thrust washer	2. Pinion mate gear	3. Pinion mate shaft
4. Lock pin	5. Side gear	6. Side gear thrust washer
7. Differential side bearing	8. Speedometer drive gear	9. Differential case

10. Final gear	11. Differential side bearing adjusting shim	12. Plug
13. O-ring	14. Bracket	15. RH differential side oil seal
16. Torque converter	17. Converter housing	18. Differential lubricant tube
19. Clip	20. O-ring	21. O-ring
22. Oil pump housing oil seal	23. Oil pump housing	24. Outer gear
25. Inner gear	26. Oil pump cover	27. Seal ring
28. Oil pump assembly		

Refer to GI section to make sure icons (symbol marks) in the figure. Refer to GI-8, "Component".

Without ABS

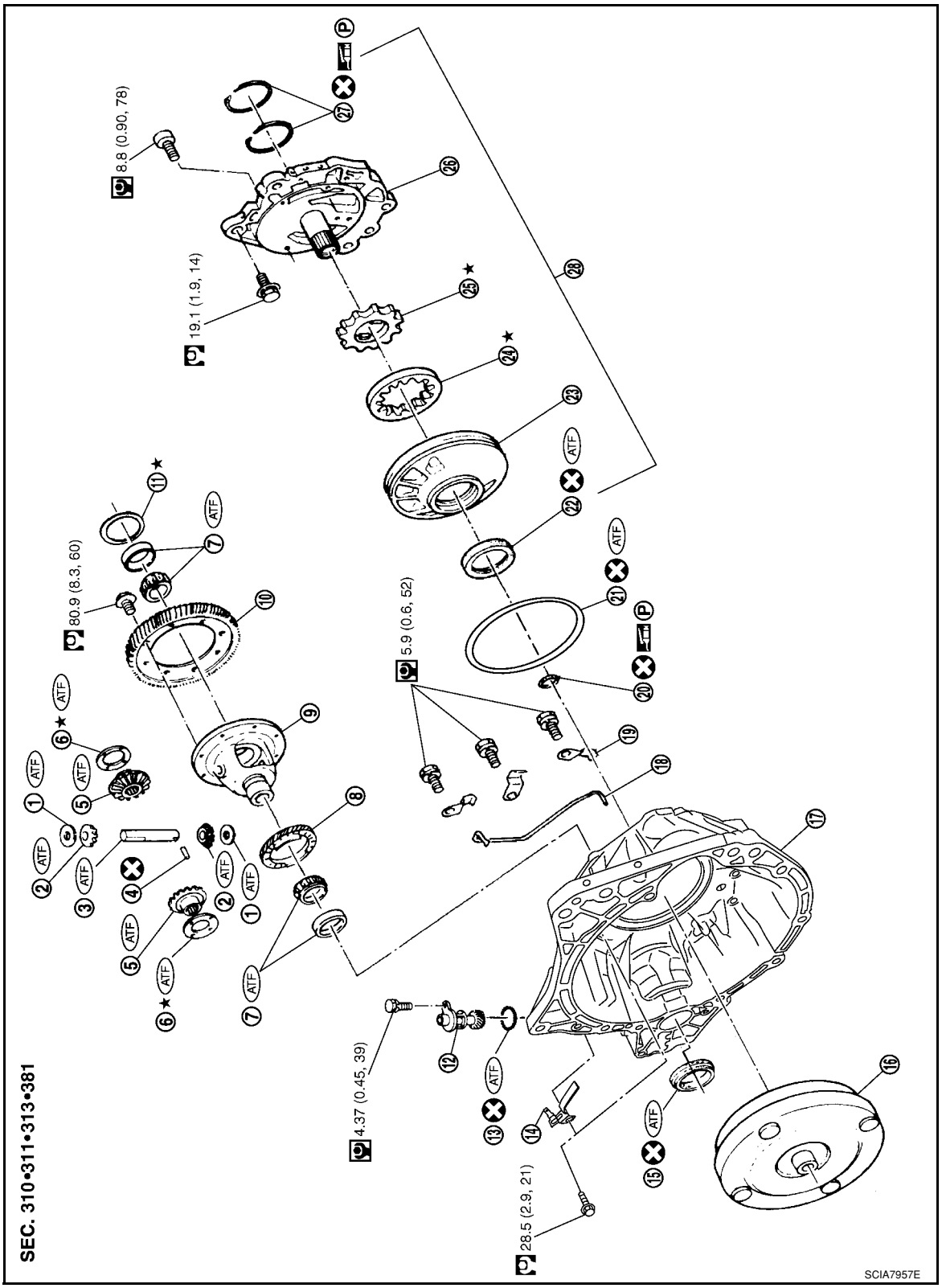

1. Pinion mate gear thrust washer	2. Pinion mate gear	3. Pinion mate shaft
4. Lock pin	5. Side gear	6. Side gear thrust washer
7. Differential side bearing	8. Speedometer drive gear	9. Differential case
10. Final gear	11. Differential side bearing adjusting shim	12. Speedometer pinion
13. O-ring	14. Bracket	15. RH differential side oil seal

16. Torque converter
17. Converter housing
18. Differential lubricant tube
19. Clip
20. O-ring
21. O-ring
22. Oil pump housing oil seal
23. Oil pump housing
24. Outer gear
25. Inner gear
26. Oil pump cover
27. Seal ring
28. Oil pump assembly

Refer to GI section to make sure icons (symbol marks) in the figure. Refer to GI-8, "Component".

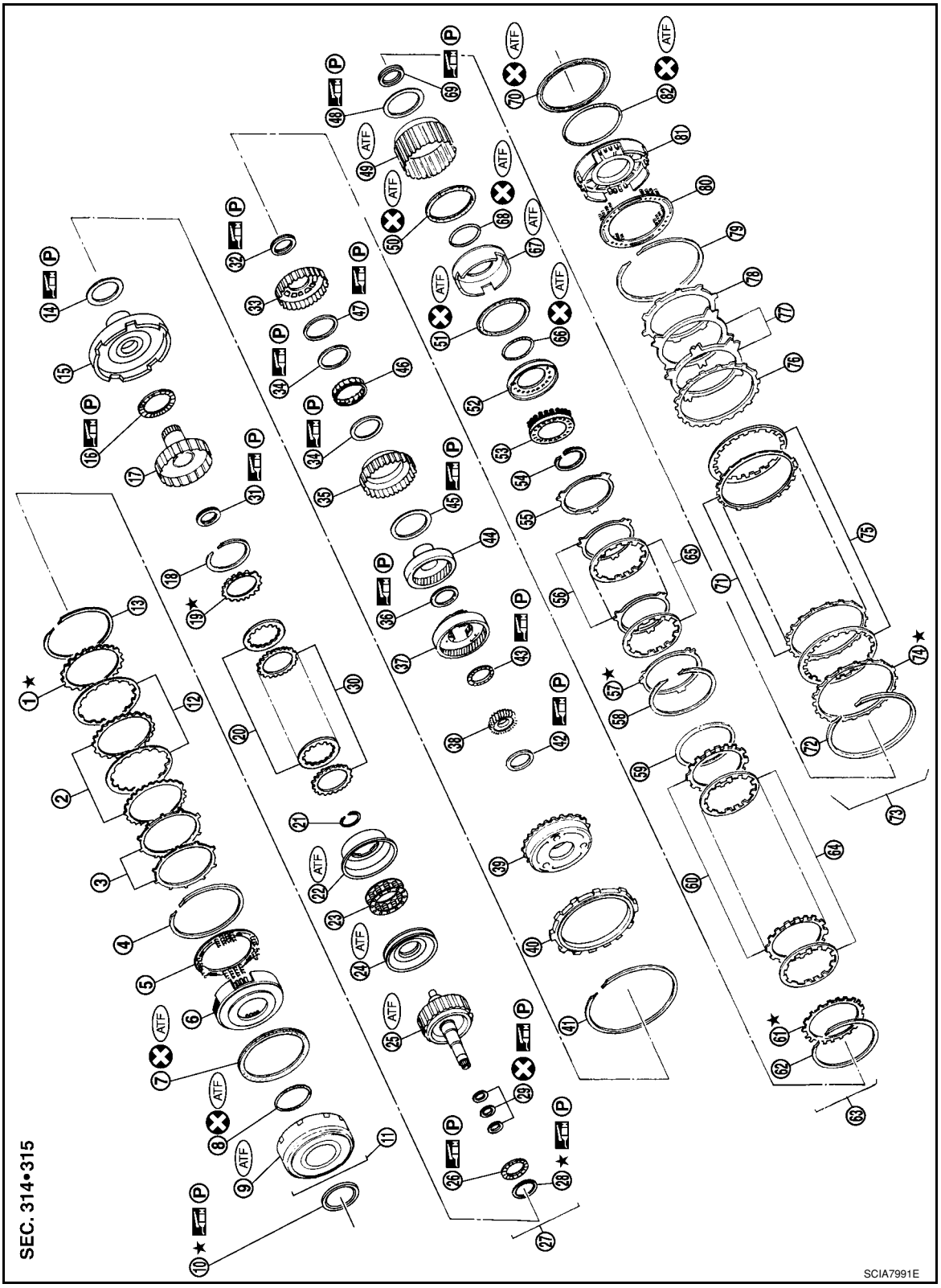

1. Retaining plate	2. Driven plate	3. Dish plate
4. Snap ring	5. Spring retainer assembly	6. Reverse clutch piston
7. Seal lip	8. D-ring	9. Reverse clutch drum
10. Thrust washer	11. Reverse clutch assembly	12. Drive plate
13. Snap ring	14. Needle bearing	15. Front sun gear
16. Needle bearing	17. High clutch hub	18. Snap ring
19. Retaining plate	20. Drive plate	21. Snap ring
22. Cancel cover	23. Spring retainer assembly	24. High clutch piston
25. Input shaft assembly (high clutch drum)	26. Needle bearing	27. High clutch assembly
28. Bearing race	29. Seal ring	30. Driven plate
31. Needle bearing	32. Needle bearing	33. Overrun clutch hub
34. End bearing	35. Forward clutch hub	36. Needle bearing
37. Rear planetary carrier	38. Rear sun gear	39. Front planetary carrier
40. Low one-way clutch	41. Snap ring	42. Needle bearing
43. Needle bearing	44. Rear internal gear	45. Thrust washer
46. Forward one-way clutch	47. Thrust washer	48. Thrust washer
49. Forward clutch drum	50. Seal lip	51. Seal lip
52. Overrun clutch piston	53. Spring retainer assembly	54. Snap ring
55. Dish plate	56. Driven plate	57. Retaining plate
58. Snap ring	59. Dish plate	60. Driven plate
61. Retaining plate	62. Snap ring	63. Forward clutch assembly and over-run clutch assembly
64. Drive plate	65. Drive plate	66. D-ring
67. Forward clutch piston	68. D-ring	69. Needle bearing
70. Seal lip	71. Driven plate	72. Snap ring
73. Low & reverse brake assembly	74. Retaining plate	75. Drive plate
76. Retaining plate	77. Dish plate	78. Driven plate
79. Snap ring	80. Spring retainer assembly	81. Low & reverse brake piston
82. D-ring		

Refer to GI section to make sure icons (symbol marks) in the figure. Refer to GI-8, "Component".

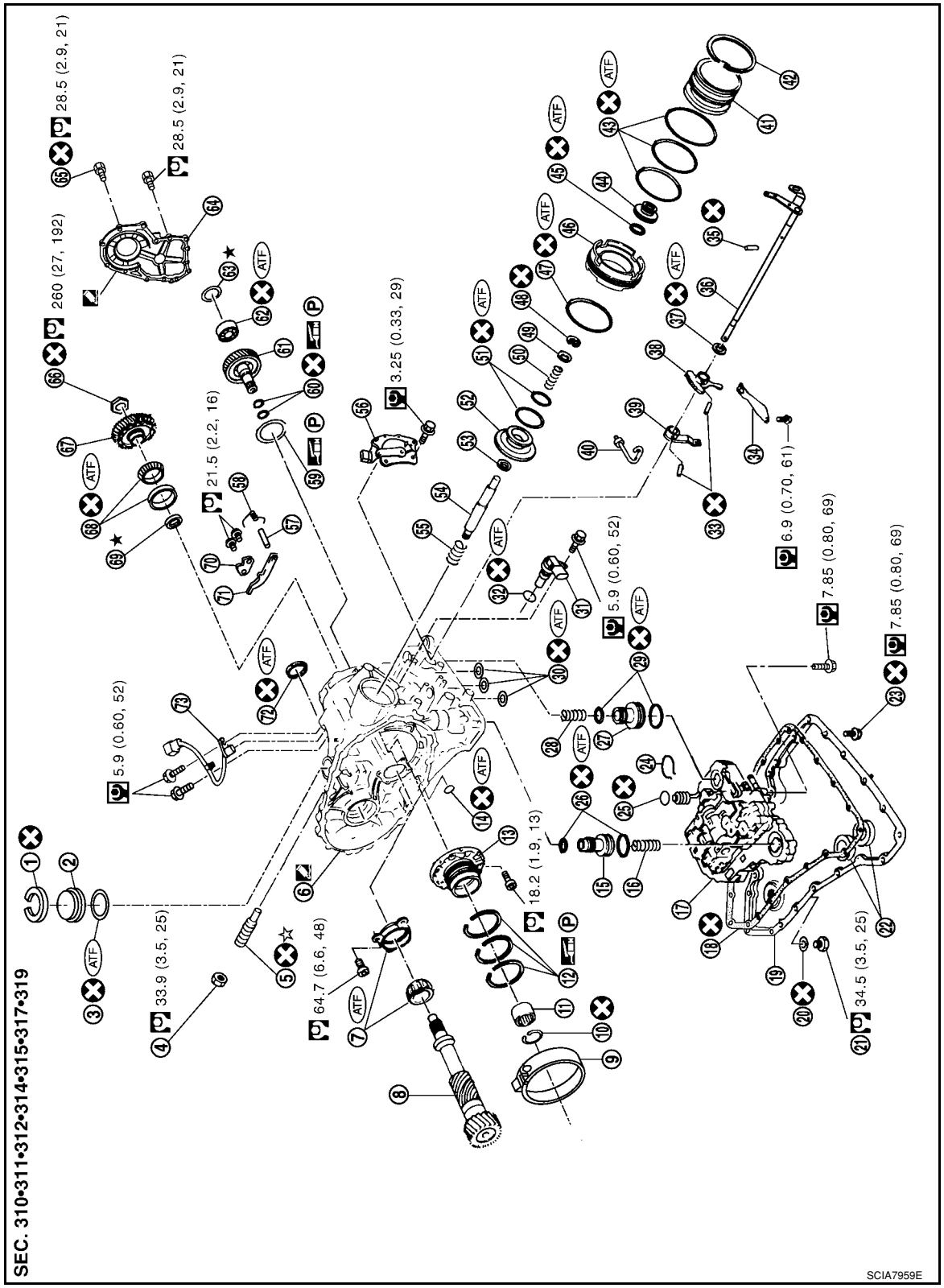

1. Snap ring	2. Governor cap	3. O-ring
4. Lock nut	5. Anchor end pin	6. Transaxle case
7. Reduction pinion gear bearing	8. Reduction pinion gear	9. Brake band
10. Snap ring	11. Radial needle bearing	12. Seal ring
13. Bearing retainer	14. O-ring	15. Servo release accumulator piston
16. Return spring	17. Control valve assembly	18. Oil pan gasket

19. Oil pan	20. Drain plug gasket	21. Drain plug
22. Magnet	23. Oil pan fitting bolt	24. Snap ring
25. O-ring	26. O-ring	27. N-D accumulator piston
28. Return spring	29. O-ring	30. Lip seal
31. Turbine revolution sensor (power train revolution sensor)	32. O-ring	33. Retaining pin
34. Detent spring	35. Retaining pin	36. Manual shaft
37. Manual shaft oil seal	38. Manual plate	39. Parking rod plate
40. Parking rod	41. OD servo piston retainer	42. Snap ring
43. O-ring	44. OD servo piston	45. D-ring
46. Servo piston retainer	47. O-ring	48. E-ring
49. Spring retainer	50. OD servo return spring	51. D-ring
52. Band servo piston	53. Band servo thrust washer	54. Band servo piston stem
55. 2nd servo return spring	56. PNP switch	57. Parking shaft
58. Return spring	59. Thrust needle bearing	60. Seal ring
61. Output shaft	62. Output shaft bearing	63. Output shaft adjusting shim
64. Side cover	65. Side cover fitting bolt	66. Lock nut
67. Idler gear	68. Idler gear bearing	69. Reduction pinion gear adjusting shim
70. Parking actuator support	71. Parking pawl	72. LH differential side oil seal
73. Revolution sensor		

Refer to GI section to make sure icons (symbol marks) in the figure. Refer to GI-8, "Component".

However, refer to the following symbol for others.

: Apply Genuine Anaerobic Liquid Gasket or equivalent.

Oil Channel

INFOID:0000000001703374

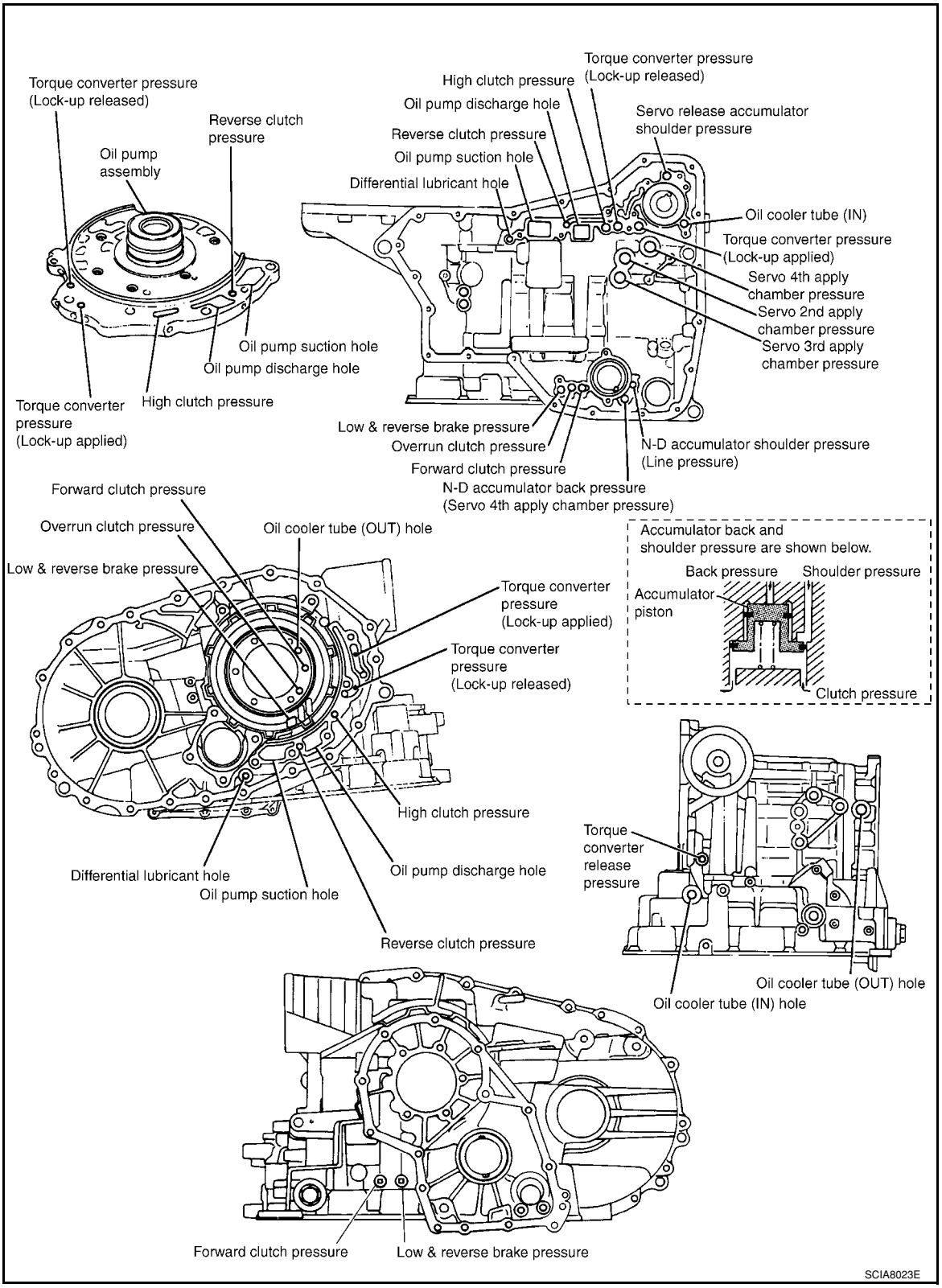

Location of Adjusting Shims, Needle Bearings and Thrust Washers

INFOID:0000000001703375

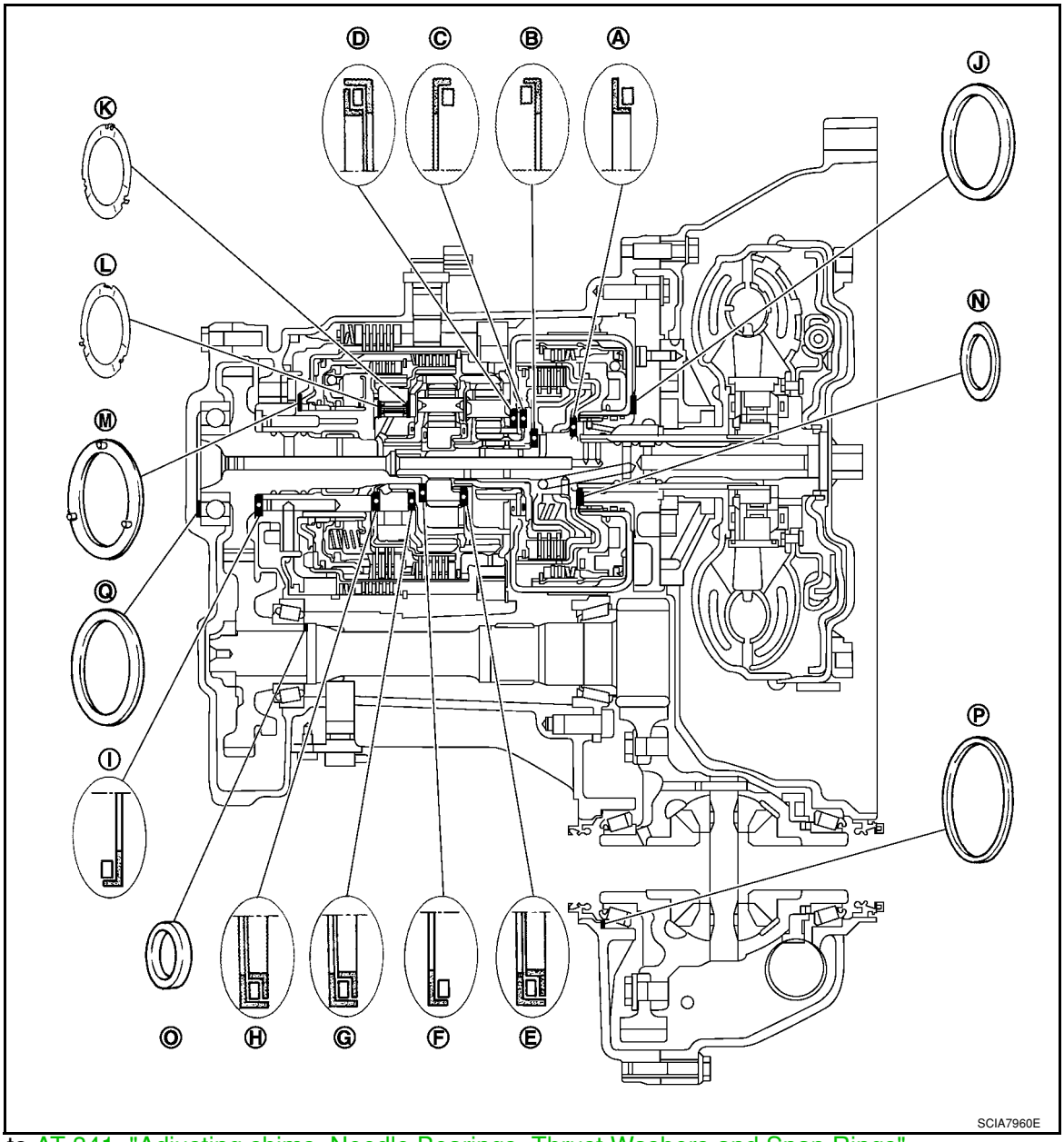

- Refer to AT-341, "Adjusting shims, Needle Bearings, Thrust Washers and Snap Rings".

Location of Snap Rings

INFOID:0000000001703376

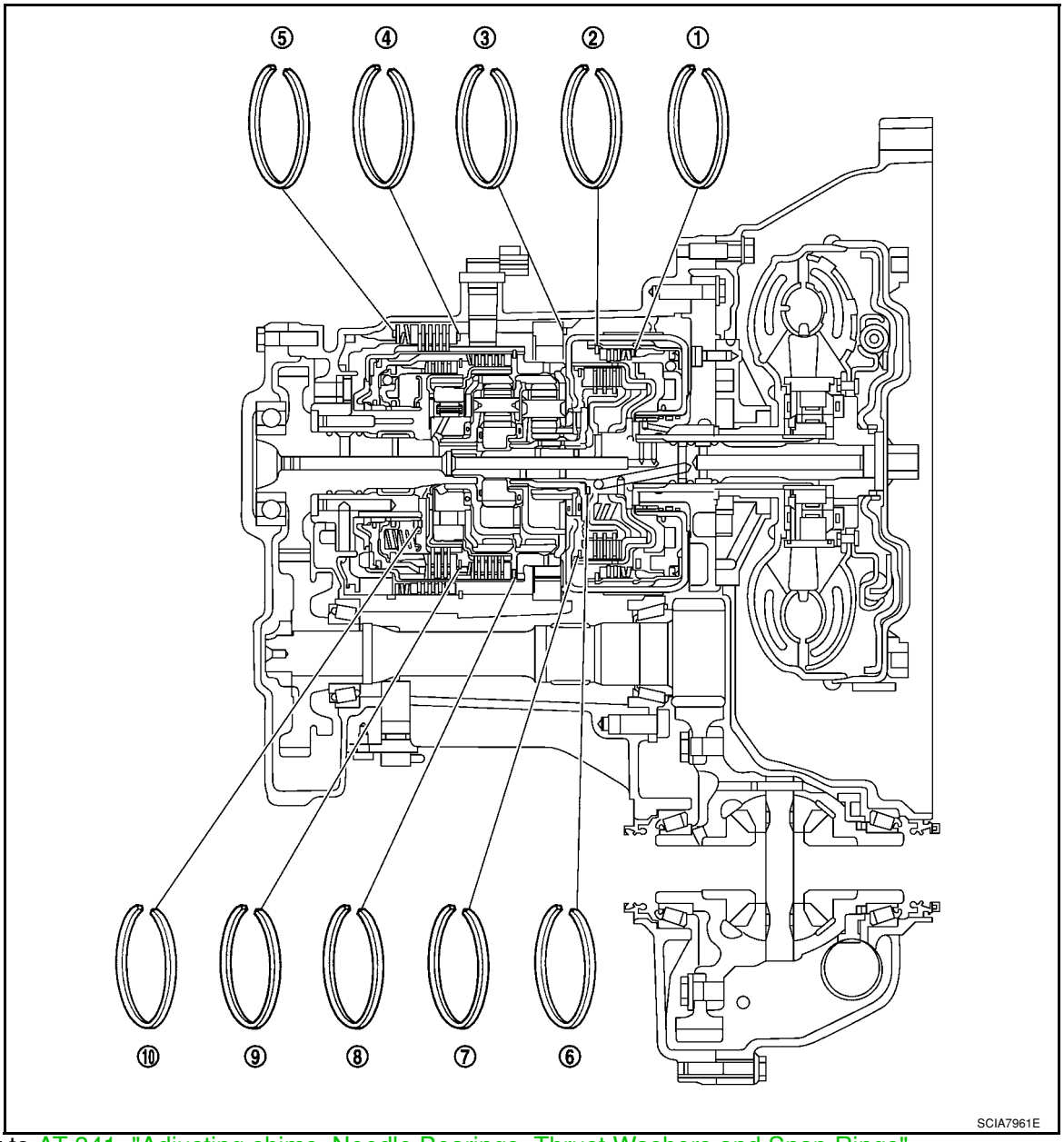

- Refer to AT-341, "Adjusting shims, Needle Bearings, Thrust Washers and Snap Rings".

DISASSEMBLY

Disassembly

INFOID:0000000001703377

1. Drain ATF through drain hole.
2. Remove drain plug gasket from drain plug.

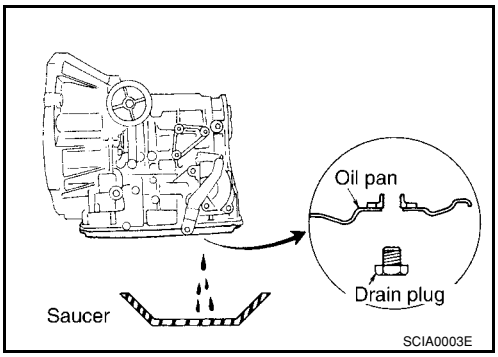

3. Remove torque converter.

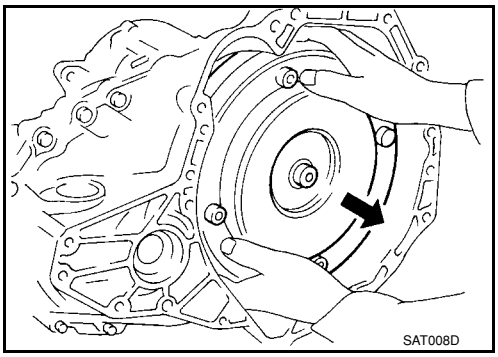

4. Check torque converter one-way clutch using check tool as shown in the figure.

a. Insert check tool into groove of bearing support built into one-way clutch outer race.

b. When fixing bearing support with check tool, rotate one-way clutch spline using screwdriver.

c. Check that inner race rotates clockwise only. If not, replace torque converter assembly.

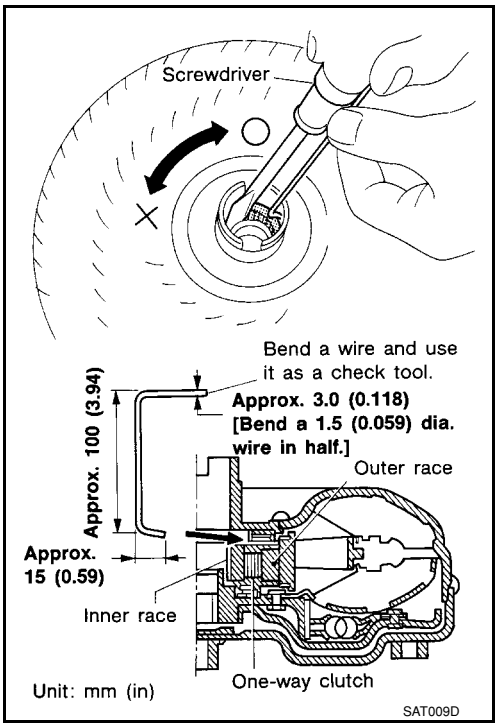

5. Remove turbine revolution sensor (power train revolution sensor) (1) from transaxle case (2).
   ⬅: Bolt (1)
6. Remove O-ring (3) from turbine revolution sensor (power train revolution sensor) (1).

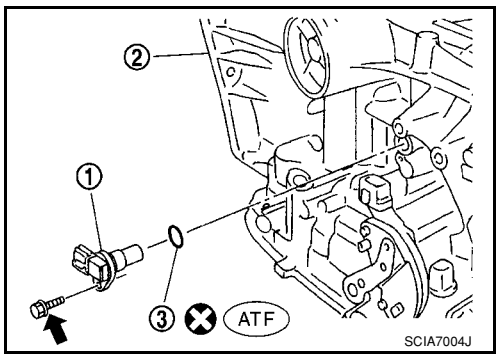

7. Remove revolution sensor (1) from transaxle case (2).
   ⬅: Bolt (2)

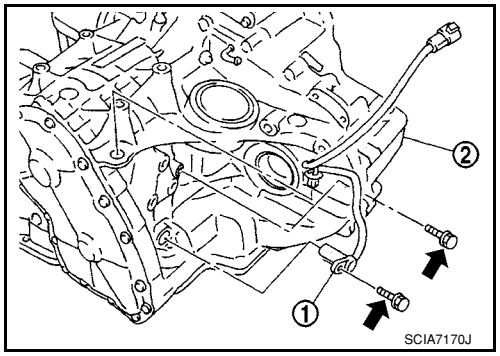

8. Remove plug or speedometer pinion according to the following procedures.

a. With ABS

i. Remove plug (1) from converter housing (2).
   ⬅: Bolt (1)

ii. Remove O-ring (3) from plug (1).

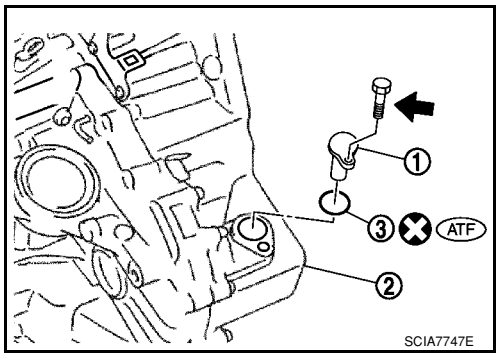

b. Without ABS

i. Remove speedometer pinion (1) from converter housing (2).
   ⬅: Bolt (1)

ii. Remove O-ring (3) from speedometer pinion (1).

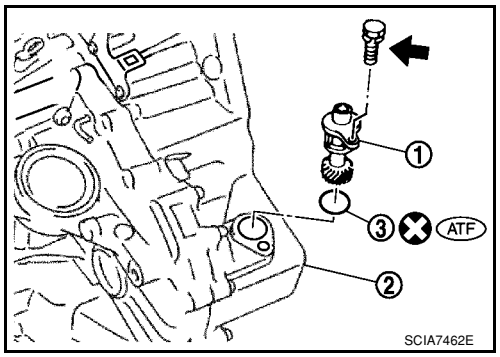

9. Set manual shaft (1) in “P” position.
10. Remove PNP switch (2) from transaxle case.
    ⬅: Bolt (3)
11. Remove oil pan fitting bolts.
12. Remove oil pan and oil pan gasket.

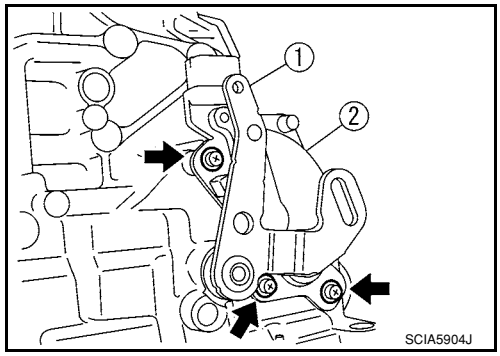

13. Check foreign materials in oil pan to help determine causes of malfunction. If the ATF is very dark, smells burned, or contains foreign particles, frictional material (clutches, band) may need replacement. A tacky film that will not wipe clean indicates varnish build up. Varnish can cause valves, servo, and clutches to stick and can inhibit pump pressure.
    - **If frictional material is detected, replace radiator after repair of A/T. Refer to CO-11.**
14. Remove magnets from oil pan.

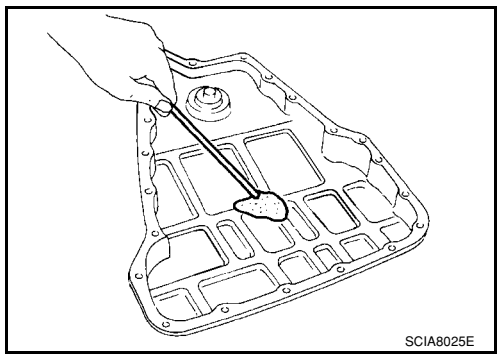

15. Remove control valve assembly according to the following procedures.

a. Remove snap ring (1) from terminal body (2).
   CAUTION:
   Do not expand snap ring (1) excessively.
b. Push terminal body (2) into transaxle case.

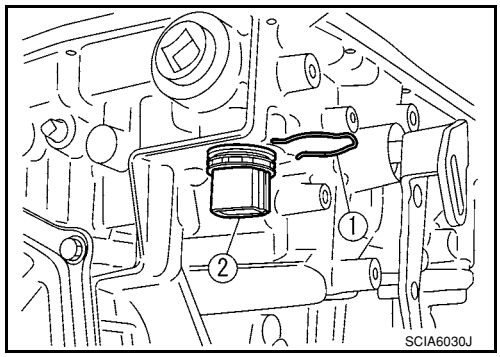

c. Remove control valve assembly fitting bolts **A**, **B** and **C**.

Bolt length, number and location:

Bolt symbol	A	B	C
Bolt length “ℓ” [mm (in)] ℓ	40.0 mm (1.575 in)	33.0 mm (1.299 in)	43.5 mm (1.713 in)
Number of bolts	5	6	2

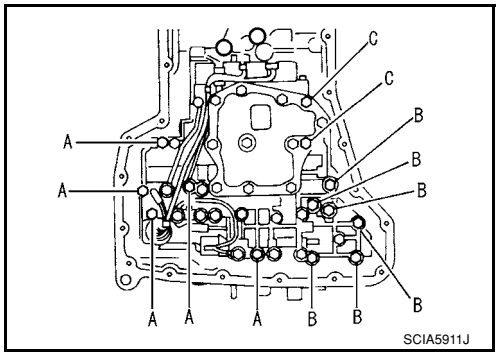

d. Remove control valve assembly from transaxle case.
   CAUTION:
   Be careful not to drop manual valve.

16. Remove manual valve from control valve assembly.
    - **Inspect the sliding surfaces of manual valve and valve body, and replace if damaged or dented.**

    CAUTION:
    Be careful not to drop manual valve.
17. Remove O-ring from terminal body.

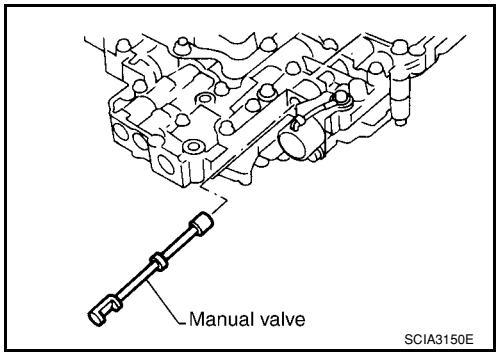

18. Remove return spring from servo release accumulator piston.

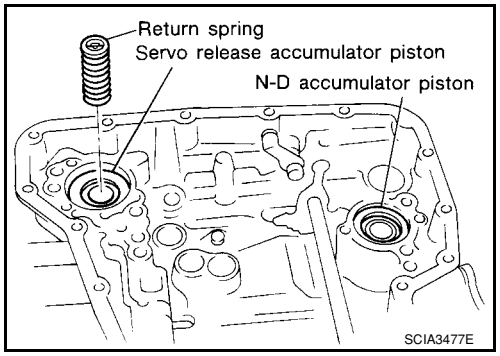

19. Apply compressed air into the oil hole as shown in the figure, and remove servo release accumulator piston from transaxle case.

    CAUTION:
    Strong flow of air will push the accumulator piston out along with a splash of ATF. Cover the area with lint-free cloth and blow air little by little to avoid this.

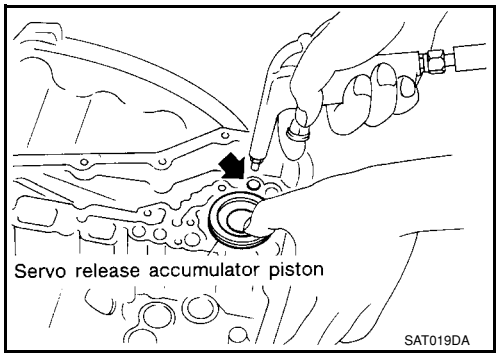

20. Apply compressed air into the oil hole as shown in the figure, and remove N-D accumulator piston and return spring from transaxle case.

    CAUTION:
    Strong flow of air will push the accumulator piston out along with a splash of ATF. Cover the area with lint free-cloth and blow air little by little to avoid this.

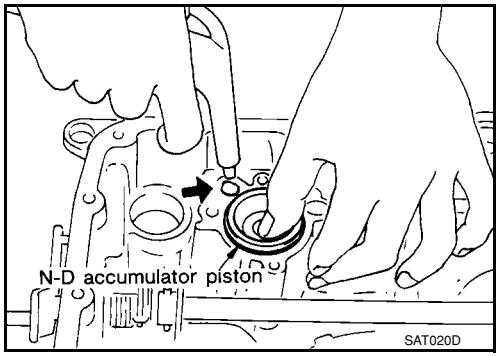

21. Remove O-rings (1) from servo release accumulator piston (2) and N-D accumulator piston (3).

    CAUTION:
    Wrap the removed servo release accumulator piston (2) and N-D accumulator piston (3) in a lint-free cloth.

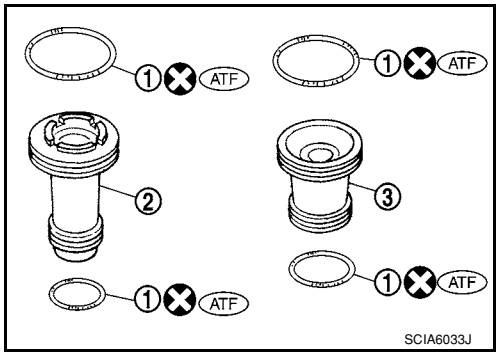

- **Inspect the sliding surfaces of each accumulator piston and transaxle case, and replace if damaged or dented.**
  (1): Servo release accumulator piston
  (2): N-D accumulator piston

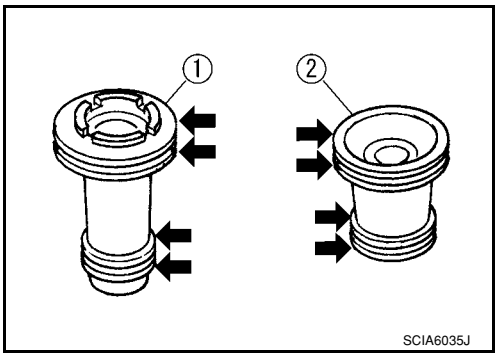

- Inspect each return spring, and replace if deformed or worn. Refer to **AT-343, "Accumulator"** **for free length (L_1) and length (L_2).**
  (1): Return spring (Servo release accumulator)
  (2): Return spring (N-D accumulator)
  CAUTION:
  Do not remove spring retainer (3).

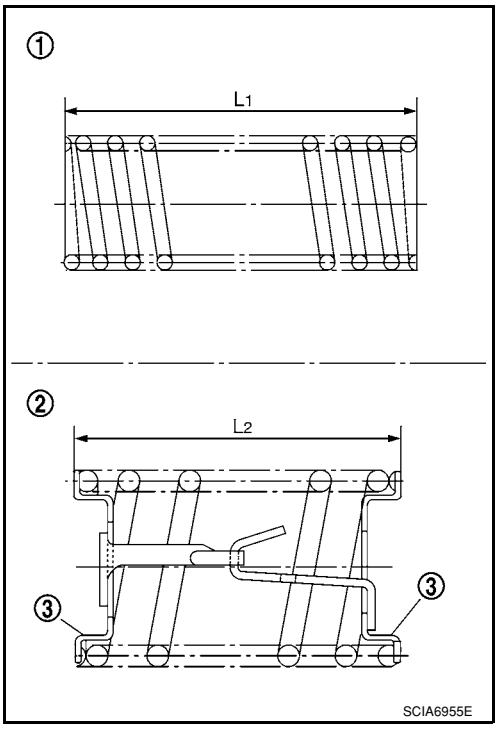

22. Remove lip seals (1) from transaxle case.

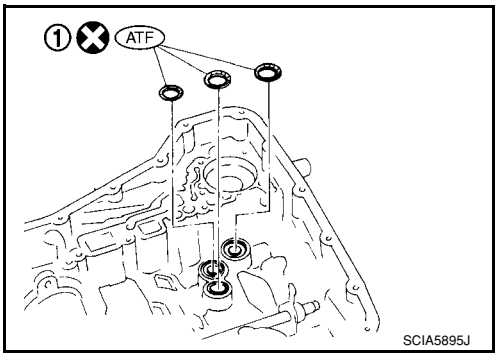

23. Remove converter housing according to the following procedures.

a. Remove converter housing fitting bolts (1) and (2) using a power tool.
b. Remove bracket from converter housing
c. Remove converter housing by tapping it lightly.

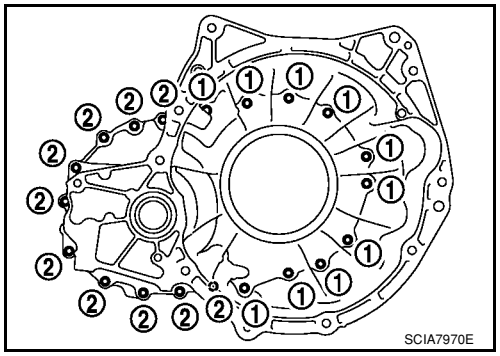

d. Remove O-ring from differential lubricant hole.

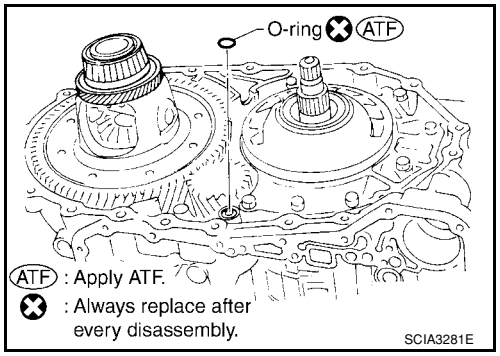

24. Remove final drive assembly from transaxle case.

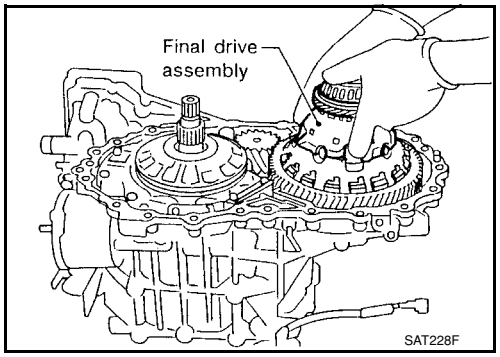

25. Remove differential side bearing outer race from transaxle case and converter housing.

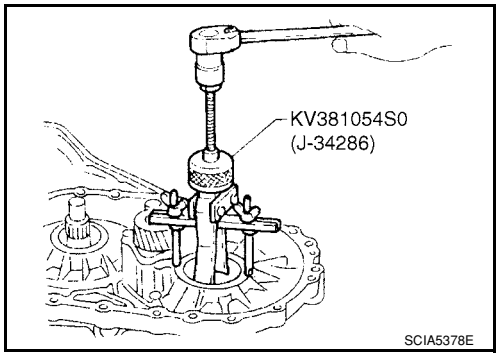

26. Remove differential side bearing adjusting shim from transaxle case.

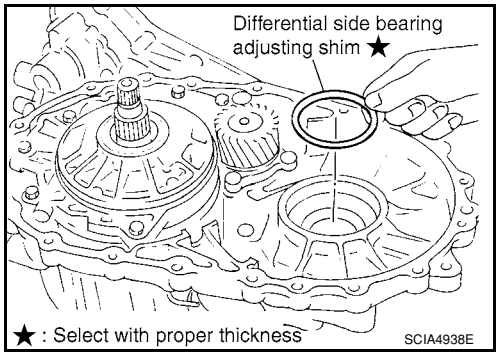

27. Remove RH differential side oil seal from converter housing using a flat-bladed screwdriver.
    CAUTION:
    Be careful not to scratch converter housing.

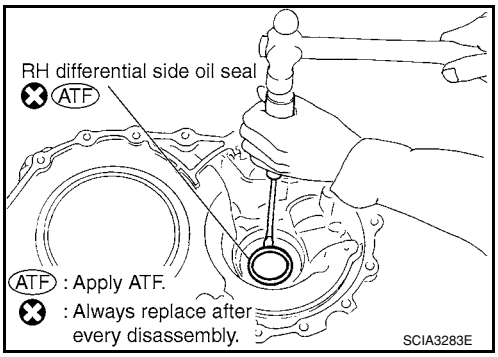

28. Remove differential lubricant tube (1) and clips (2) from converter housing.
    ⬅: Bolt (3)

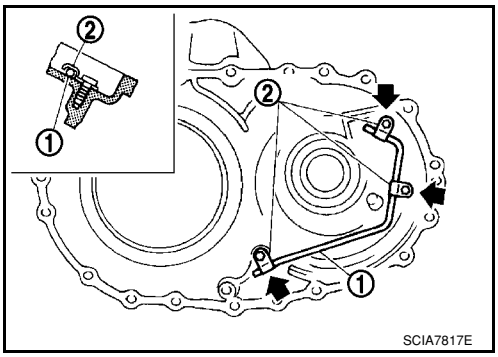

29. Remove oil pump assembly according to the following procedures.

a. Remove O-ring from input shaft assembly (high clutch drum).

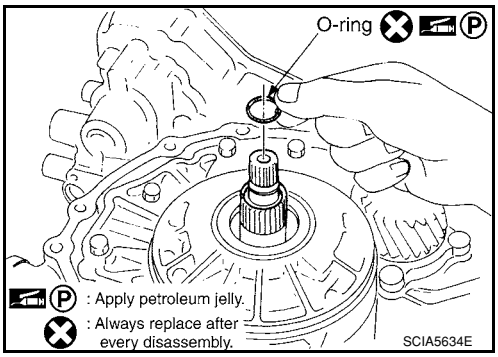

b. Remove oil pump assembly fitting bolts, and then remove oil pump assembly (1) from transaxle case.

c. Remove O-ring from oil pump assembly (1).

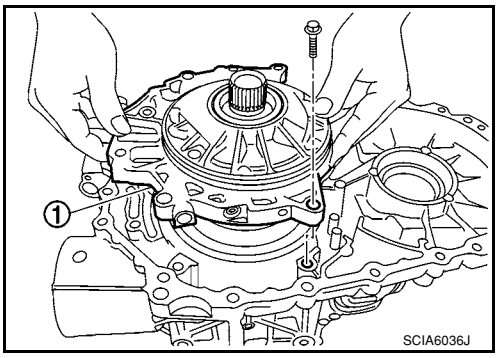

d. Remove bearing race (1) and thrust washer (2) from oil pump assembly (3).

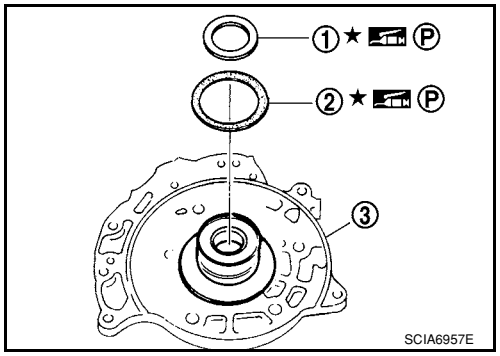

30. Remove brake band according to the following procedures.

a. Loosen lock nut (1), and then remove anchor end pin (2) and lock nut (1) as a set from transaxle case.

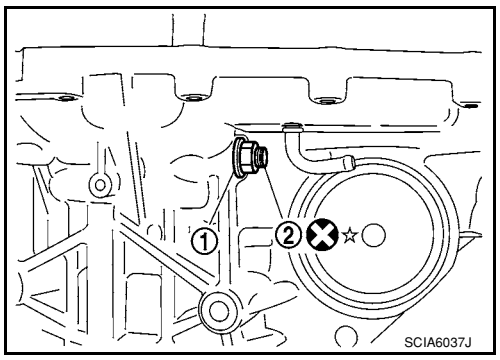

b. Remove brake band from transaxle case.

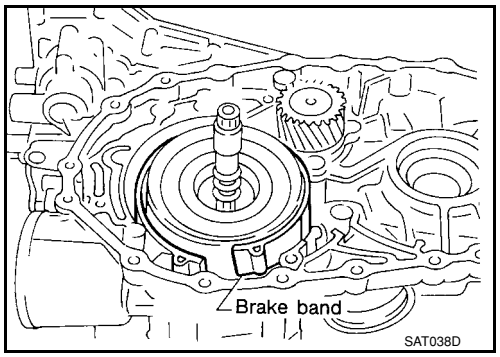

- **To prevent brake linings from cracking or peeling, do not stretch the flexible band unnecessarily. When removing brake band, always secure it with a clip as shown in the figure.**
  Leave the clip in position after removing brake band.

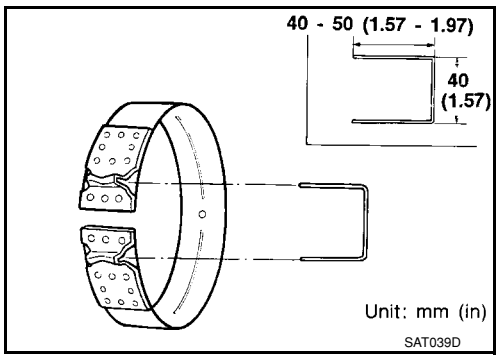

c. Check brake band facing for damage, cracks, wear or burns.

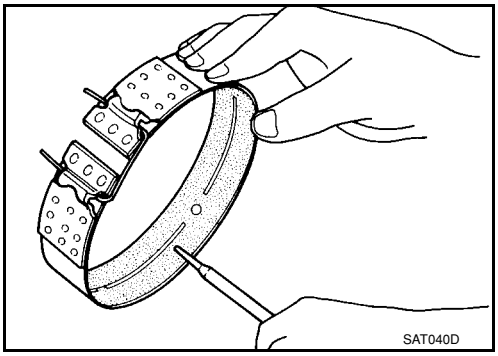

31. Remove input shaft assembly (high clutch assembly) and reverse clutch assembly according to the following procedures.

a. Remove input shaft assembly (high clutch assembly) (1) with reverse clutch assembly (2).

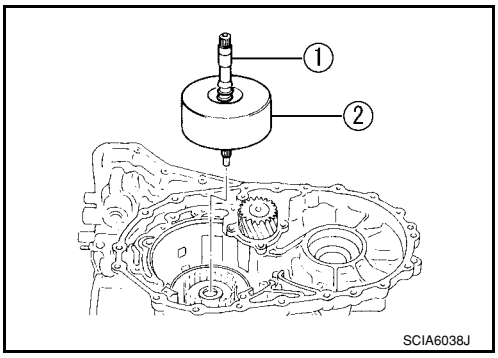

b. Remove input shaft assembly (high clutch assembly) (1) from reverse clutch assembly (2).

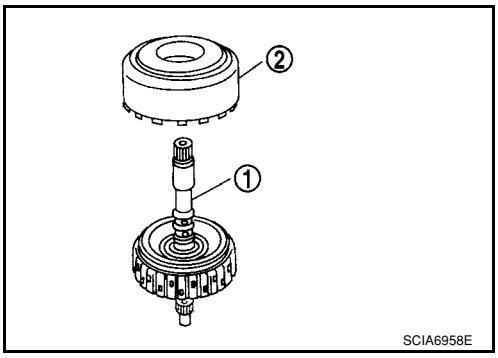

c. Remove needle bearing (1) from input shaft assembly (high clutch drum) (2).
   - **Inspect needle bearing (1) and input shaft assembly (high clutch drum) (2), and replace if damaged or worn.**

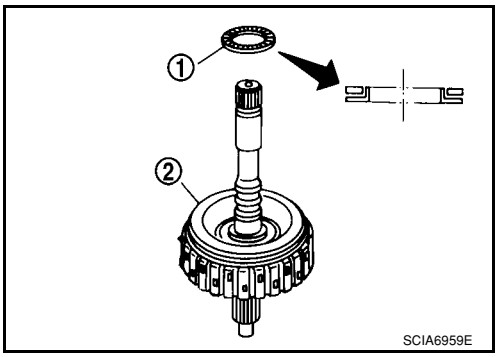

32. Remove needle bearing from high clutch hub.
    - **Inspect needle bearing, and replace if damaged or worn.**

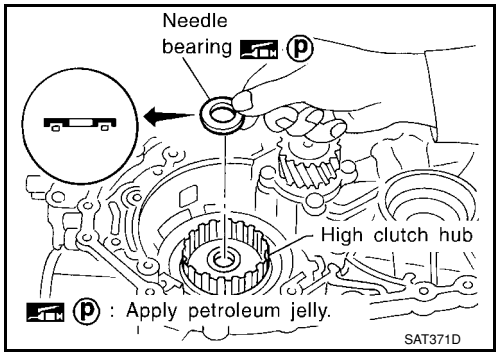

33. Remove high clutch hub from front sun gear.
    - **Inspect high clutch hub, and replace if damaged or worn.**

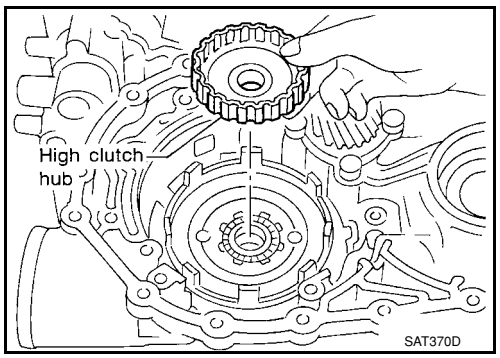

34. Remove needle bearing from front sun gear.
    - **Inspect needle bearing, and replace if damaged or worn.**

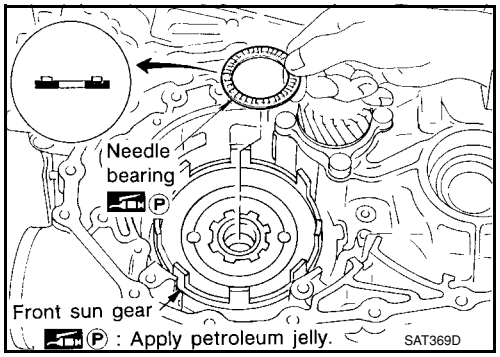

35. Remove front sun gear from front planetary carrier.

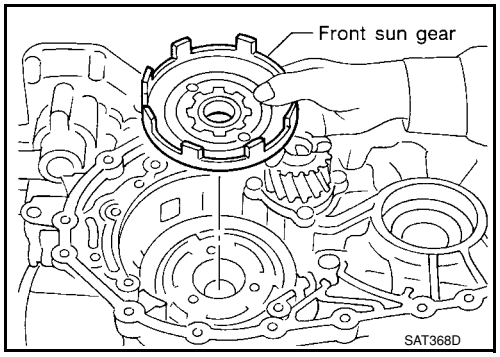

36. Remove needle bearing (1) from front sun gear (2).
    - **Inspect needle bearing (1) and front sun gear (2), and replace if damaged or worn.**

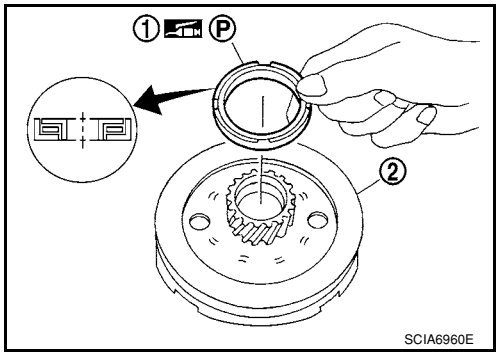

37. Remove front planetary carrier and low one-way clutch according to the following procedures.

a. Remove snap ring using a flat-bladed screwdriver.

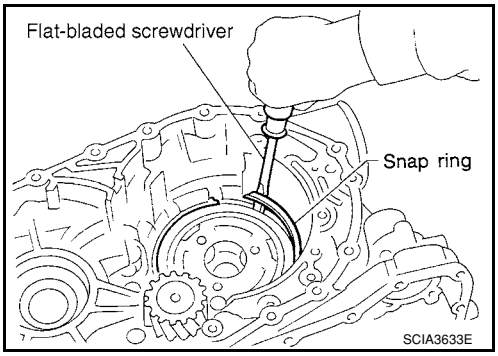

b. Remove low one-way clutch (1) and front planetary carrier (2) as a set from transaxle case.

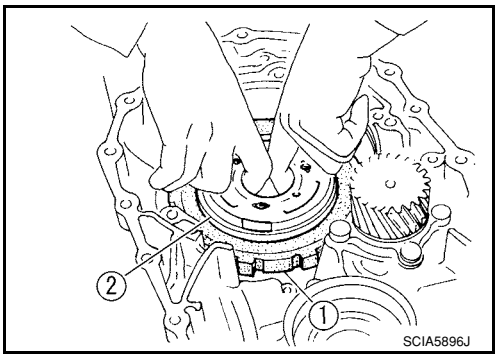

c. Check that low one-way clutch rotates counter-clockwise around front planetary carrier. Then try to turn it clockwise and check that it is locked.
   - **Replace low one-way clutch if necessary.**

d. Remove low one-way clutch from front planetary carrier by turning it in the direction of unlock.
   - **Inspect low one-way clutch, and replace if damaged or worn.**

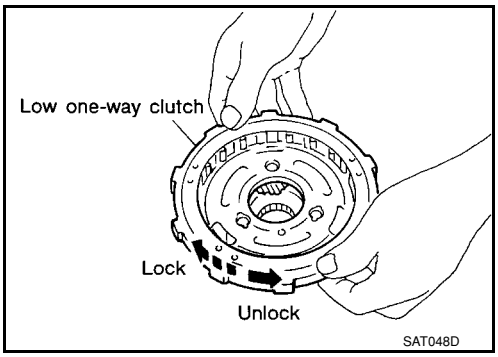

e. Remove needle bearing (1) from front planetary carrier (2).
   - **Inspect needle bearing (1) and front planetary carrier (2), and replace if damaged or worn.**

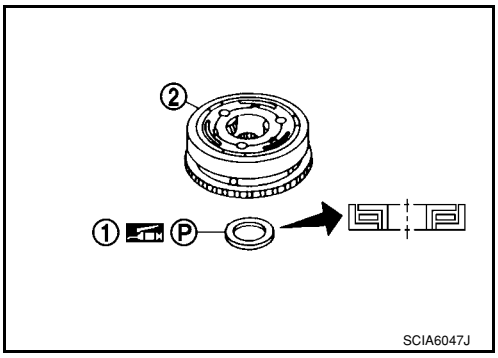

f. Check clearance between pinion washer and front planetary carrier using feeler gauge.

Standard clearance and allowable limit:

Refer to AT-345, "Planetary Carrier".

- **Replace front planetary carrier if the clearance exceeds allowable limit.**

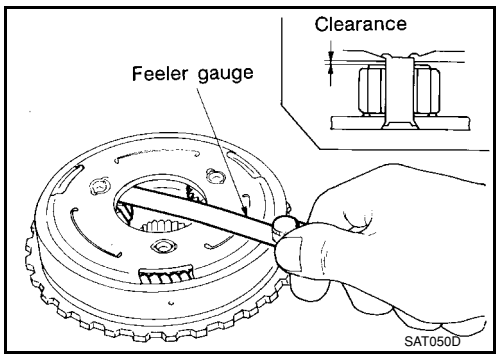

38. Remove rear planetary carrier and rear sun gear according to the following procedures.

a. Remove rear planetary carrier (with rear sun gear) from transaxle case.

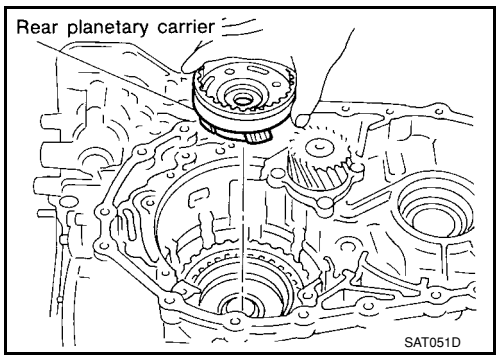

b. Remove rear sun gear from rear planetary carrier.
- **Inspect rear sun gear, and replace if damaged or worn.**

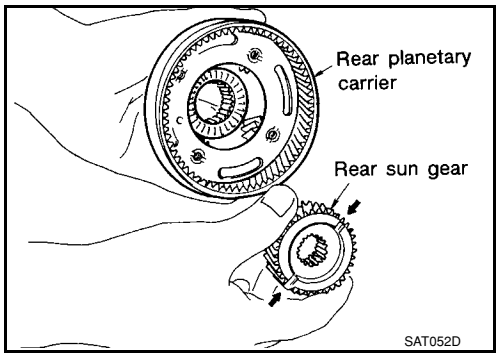

c. Remove needle bearing (1) from rear planetary carrier (2).
- **Inspect needle bearing (1) and rear planetary carrier (2), and replace if damaged or worn.**

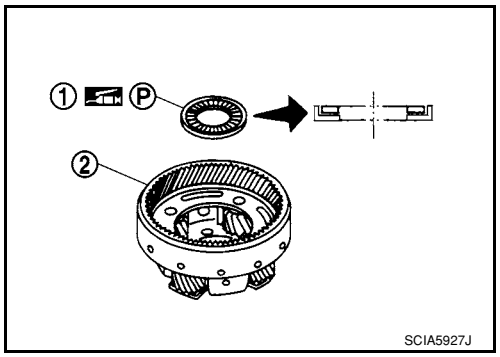

d. Check clearance between pinion washer and rear planetary carrier using feeler gauge.

Standard clearance and allowable limit:

Refer to AT-345, "Planetary Carrier".

- **Replace rear planetary carrier if the clearance exceeds allowable limit.**

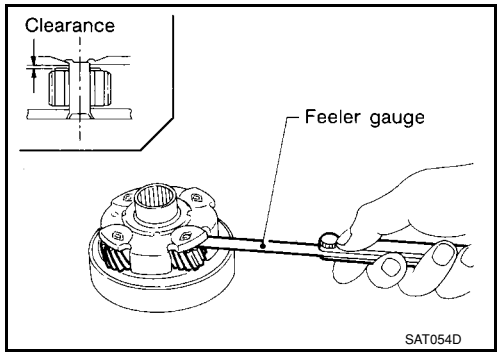

39. Remove rear internal gear (1) and forward clutch hub (2) as a set from forward clutch drum.

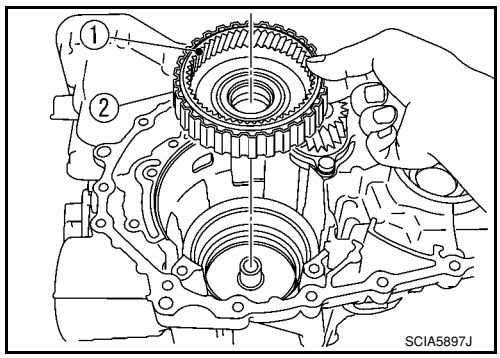

40. Remove needle bearing (1) from rear internal gear (2).
    - **Inspect needle bearing (1), and replace if damaged or worn.**

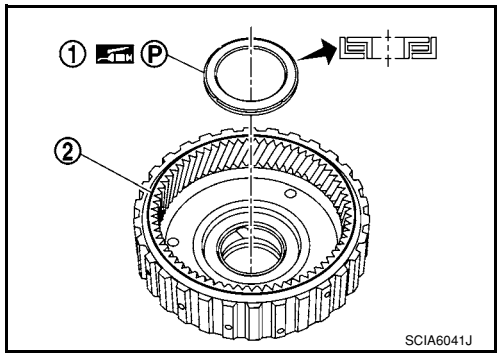

41. Remove overrun clutch hub (1) from forward clutch drum.

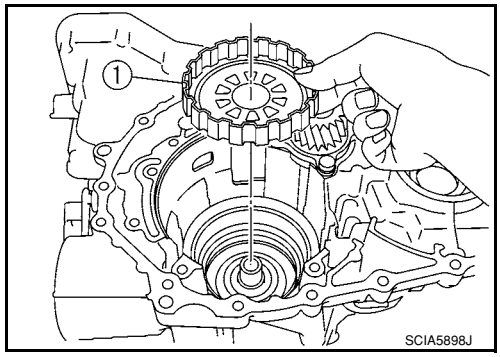

42. Remove thrust washer (1) from overrun clutch hub (2).
    - **Inspect thrust washer (1) and overrun clutch hub (2), and replace if damaged or worn.**

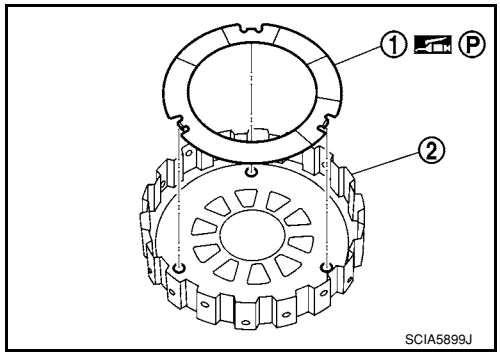

43. Remove forward clutch assembly and overrun clutch assembly (1) from transaxle case.

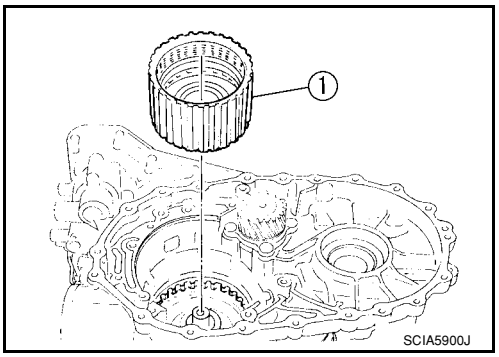

44. Remove needle bearing (1) and thrust washer (2) from bearing retainer.
    - **Inspect needle bearing (1) and thrust washer (2), and replace damaged or worn.**

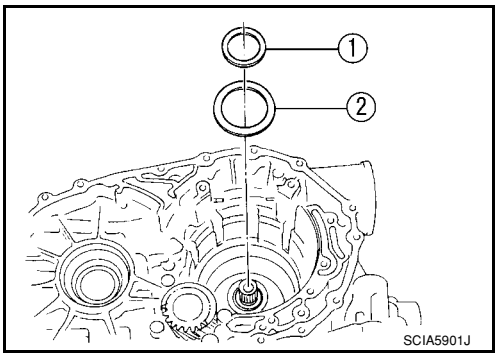

45. Remove output shaft assembly according to the following procedures.

a. Remove side cover fitting bolts.
   CAUTION:
   - **Do not mix bolts A and B.**
   - **Always replace bolts A as they are self-sealing bolts.**

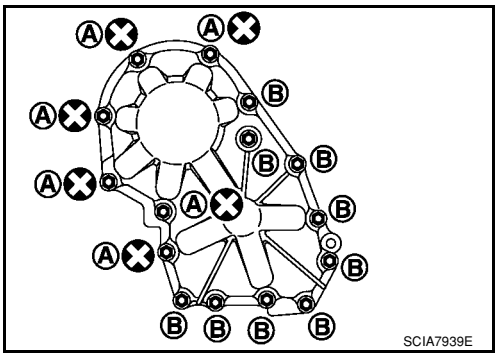

b. Remove side cover by lightly tapping it using a soft hammer.
   CAUTION:
   - **Be careful not to drop output shaft assembly. It might come out when removing side cover.**
   - **Be careful not to damage side cover.**

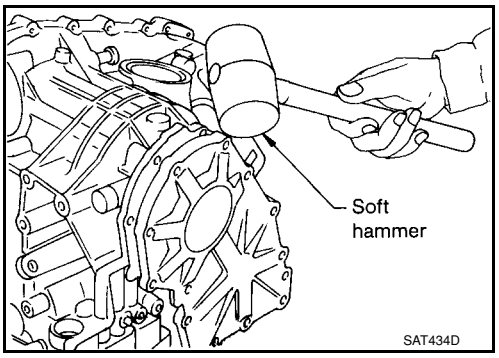

c. Remove output shaft adjusting shim.

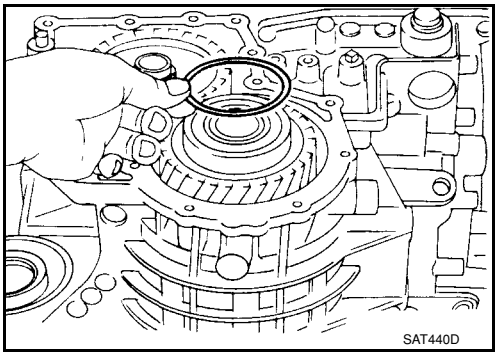

d. Remove output shaft assembly.

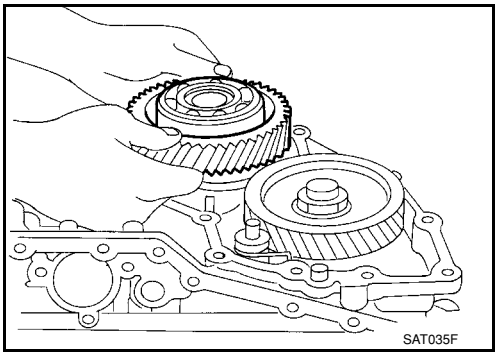

- If output shaft assembly came off with side cover, tap side-cover with a soft hammer to separate.

CAUTION:
Be careful not to damage side cover.

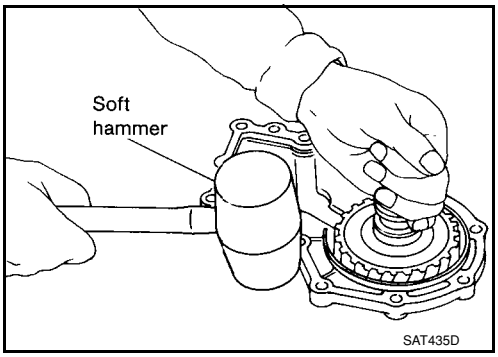

e. Remove needle bearing.
- **Check needle bearing, and replace if damaged or worn.**

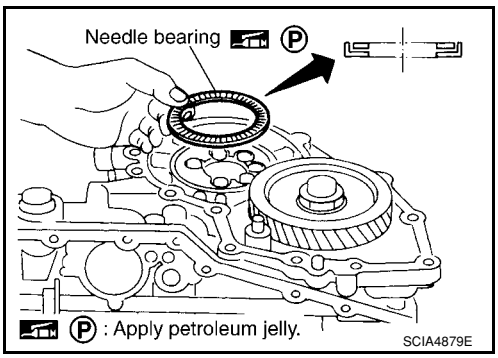

46. Disassemble reduction pinion gear according to the followingprocedures.

a. Set manual shaft to “P” position to fix idler gear.
b. Unlock idler gear lock nut with pin punch.

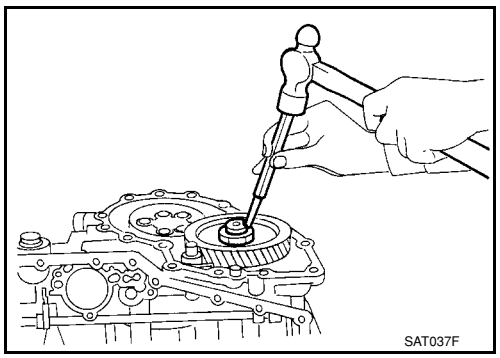

c. Remove idler gear lock nut.

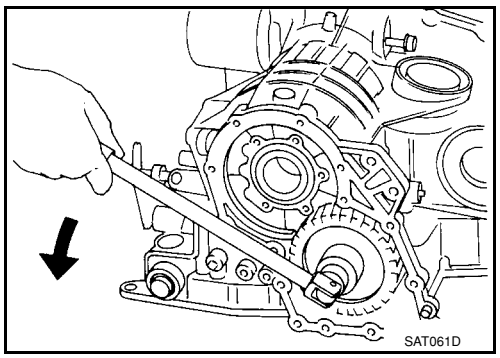

d. Remove idler gear with puller.
e. Remove reduction pinion gear.

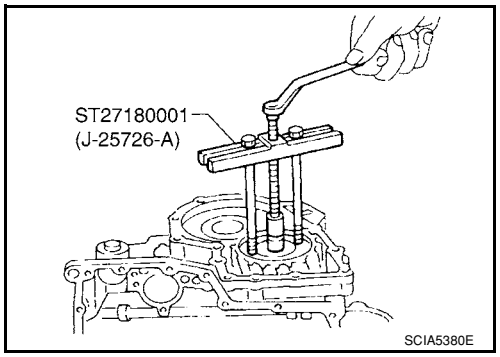

f. Remove reduction pinion gear adjusting shim from reduction pinion gear.

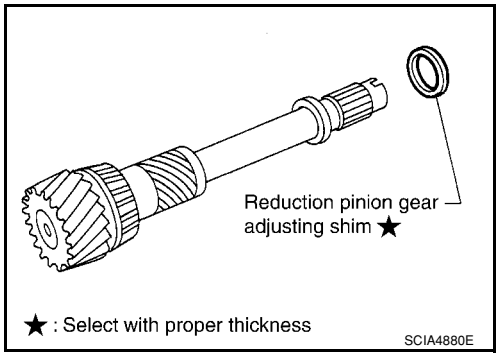

47. Remove bearing retainer fitting bolts, and then remove bearing retainer (1) from transaxle case.

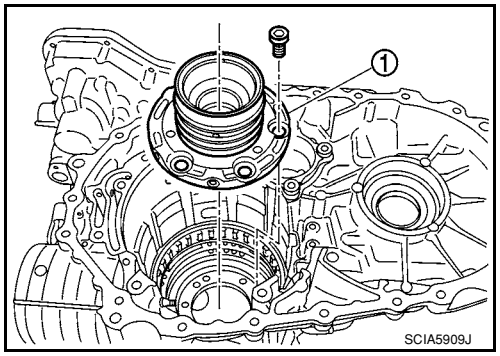

48. Remove return spring (2) from parking shaft (3) using a flat-bladed screwdriver.
    (1): Parking pawl
    - **Inspect return spring (2), and replace if damaged or worn.**

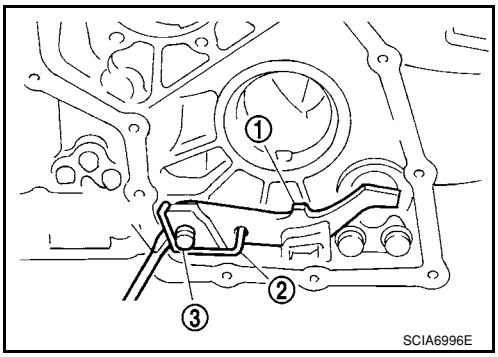

49. Draw out parking shaft (1), and then remove parking pawl (2) from transaxle case.
    - **Inspect parking shaft (1) and parking pawl (2), and replace if damaged or worn.**

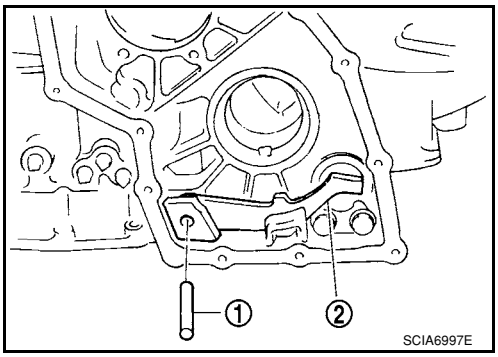

50. Remove parking actuator support (1) from transaxle case.
    - **Inspect parking actuator support (1), and replace if damaged or worn.**
51. Remove snap ring from transaxle case using a flat-bladed screwdriver.
52. Remove governor cap from transaxle case.
53. Remove O-ring from governor cap.

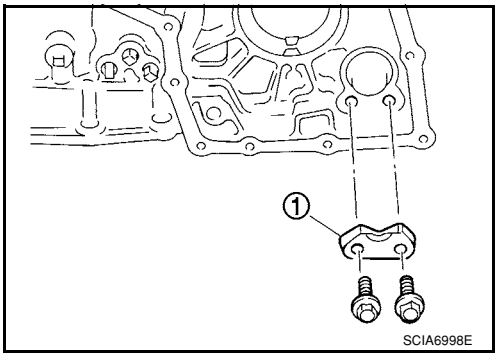

54. Remove LH differential side oil seal from transaxle case using a flat-bladed screwdriver.
    CAUTION:
    Be careful not to scratch transaxle case.

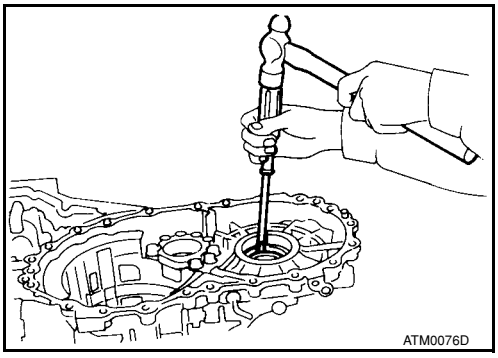

REPAIR FOR COMPONENT PARTS

Manual Shaft

INFOID:0000000001703378

COMPONENTS

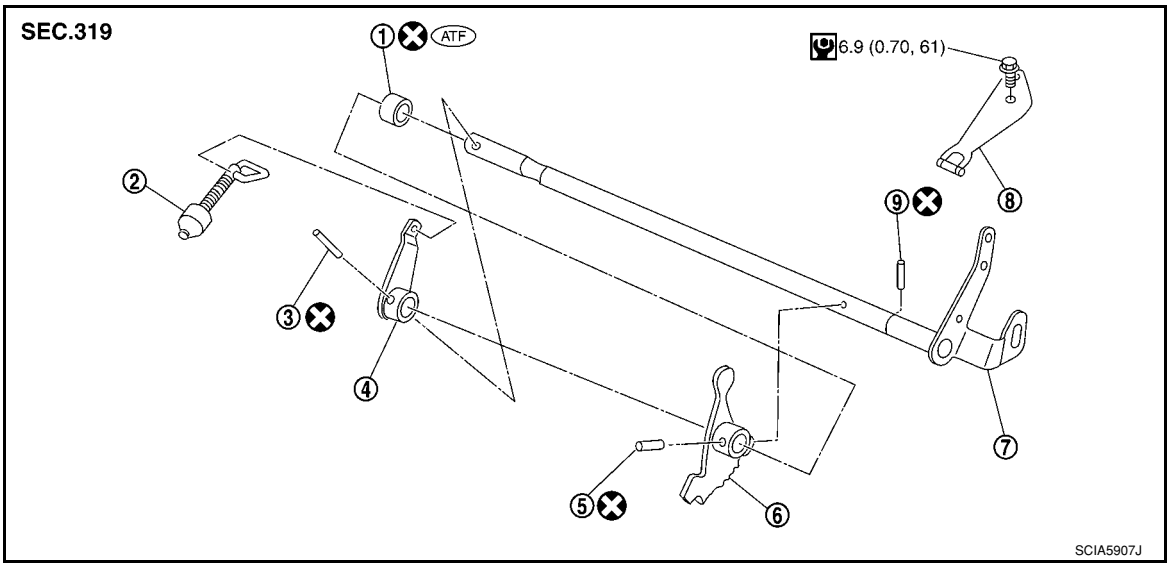

1.	Manual shaft oil seal	2.	Parking rod	3.	Retaining pin
4.	Parking rod plate	5.	Retaining pin	6.	Manual plate
7.	Manual shaft	8.	Detent spring	9.	Retaining pin

Refer to GI section to make sure icons (symbol marks) in the figure. Refer to GI-8, "Component".

REMOVAL

1. Remove detent spring from transaxle case.

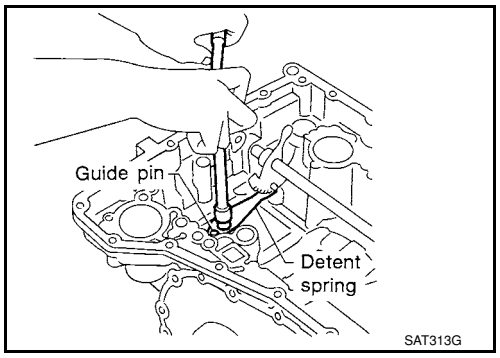

2. Drive out retaining pin of manual plate using the pin punch.

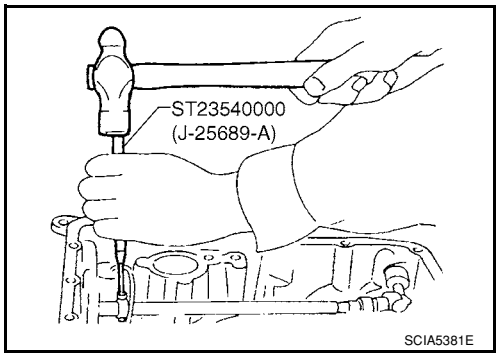

3. Pull out retaining pin (2) of parking rod plate (1) using nippers.

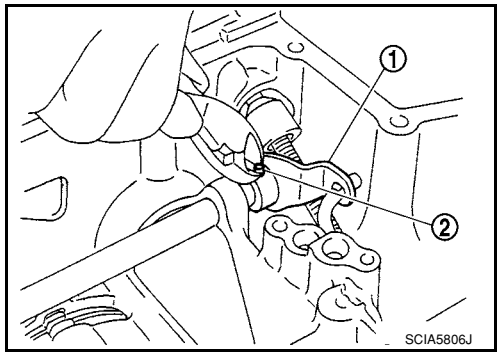

4. Pull out retaining pin (1) of manual shaft using nippers.

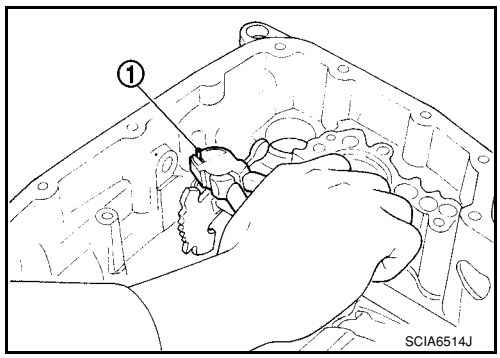

5. Remove parking rod plate (with parking rod) (3) from manual shaft (1).
6. Remove parking rod from parking rod plate (3).
7. Remove manual plate (2) from manual shaft (1).
8. Draw out manual shaft (1) from transaxle case.

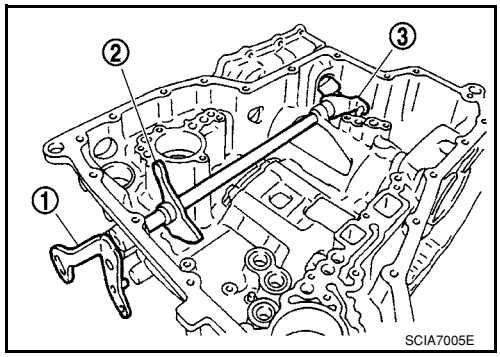

9. Remove manual shaft oil seal from transaxle case using a flat-bladed screwdriver.
   CAUTION:
   Be careful not to scratch transaxle case.

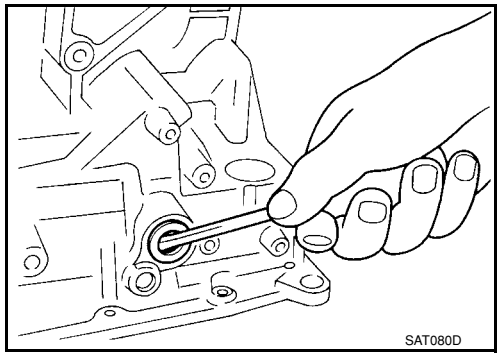

INSPECTION

Check component parts, and replace if damaged or worn.

INSTALLATION

1. Drive manual shaft oil seal into transaxle case using a drift [commercial service tool: 22 mm (0.87 in) dia.].

CAUTION:
- **Do not reuse manual shaft oil seal.**
- **Apply ATF to outer surface of manual shaft oil seal.**

2. Install parking rod to parking rod plate.

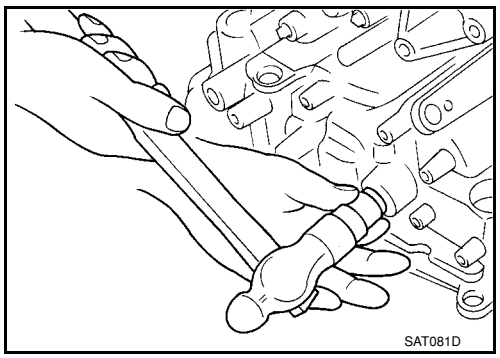

3. Insert manual shaft (1) to transaxle case, and install manual plate (2) to manual shaft (1).
4. Install parking rod plate (with parking rod) (3) to manual shaft (1).

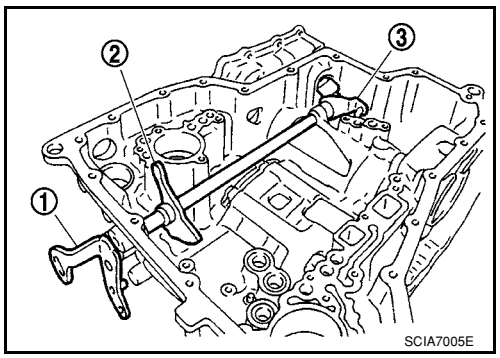

5. Align groove of manual shaft and hole of transaxle case using a pin punch A [commercial service tool: 2 mm (0.08 in) dia.].
6. Drive retaining pin of manual shaft into transaxle case using Tool B.

Tool number: **ST23540000 (J-25689-A)**

CAUTION:
Do not reuse retaining pin.

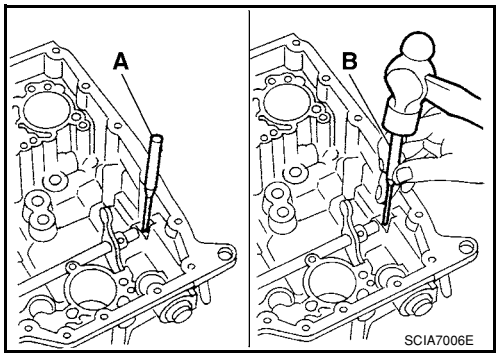

7. Set parking rod plate (1) onto manual shaft, and drive retaining pin (2) of parking rod plate (1).

Tool number: **ST23540000 (J-25689-A)**

CAUTION:
The retaining pin end should protrude approx. 3mm (0.12 in) (B) from the outer surface of parking rod plate (1).

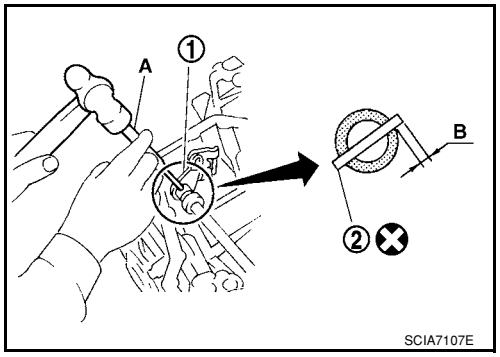

8. Set manual plate (1) onto manual shaft, and drive retaining pin (2) of manual plate (1).

Tool number: **ST23540000 (J-25698-A)**

CAUTION:
The retaining pin end should protrude approx. 3mm (0.12 in) (B) from the outer surface of manual plate (1).

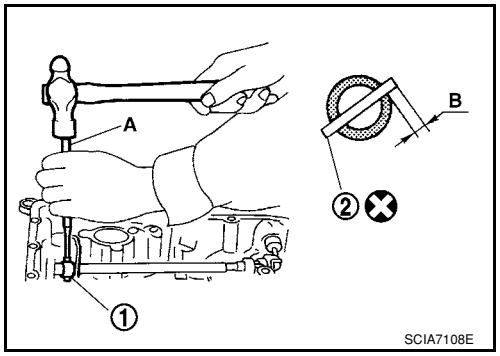

9. Install detent spring on transaxle case.
10. Tighten detent spring fitting bolt to the specified torque. Refer to "COMPONENTS".

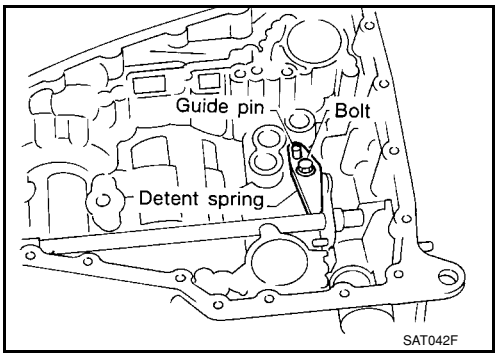

Oil Pump

INFOID:0000000001703379

COMPONENTS

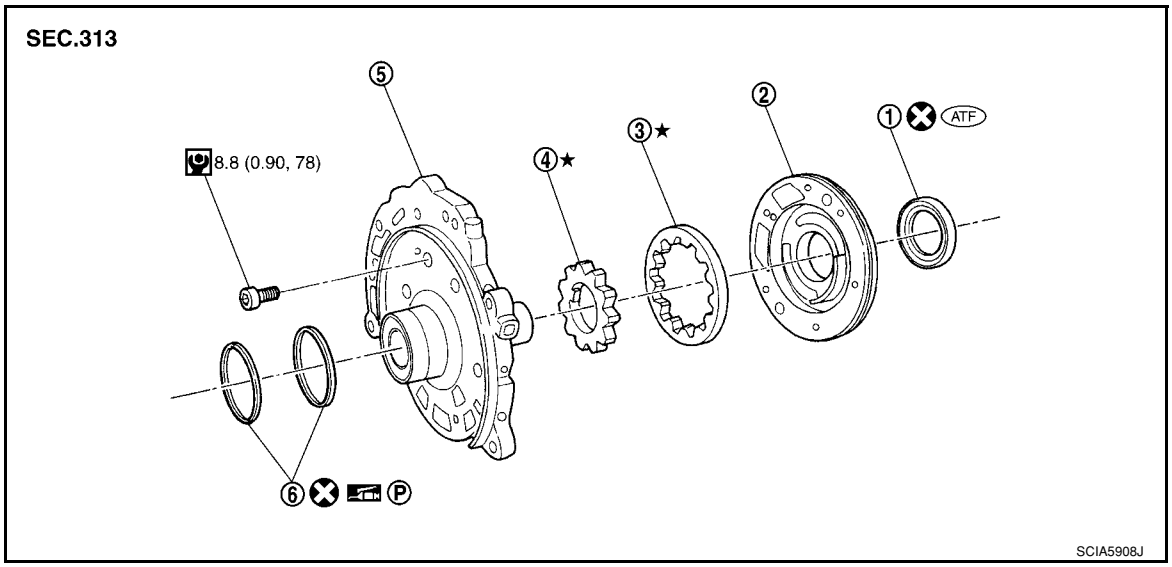

1.	Oil pump housing oil seal	2.	Oil pump housing	3.	Outer gear
4.	Inner gear	5.	Oil pump cover	6.	Seal ring

Refer to GI section to make sure icons (symbol marks) in the figure. Refer to GI-8, "Component".

DISASSEMBLY

1. Remove seal rings (1) from oil pump assembly (2).

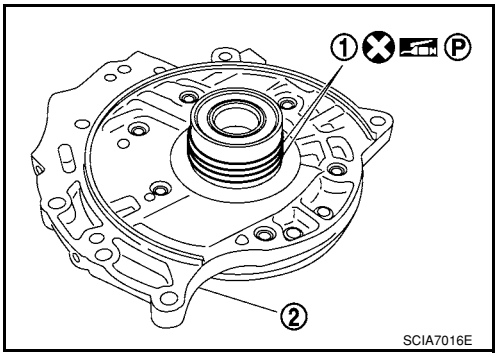

2. Remove bolts in the order as shown in the figure, and remove oil pump cover.

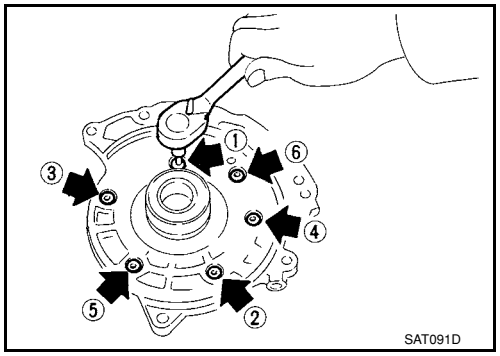

3. Remove inner gear and outer gear from oil pump housing.

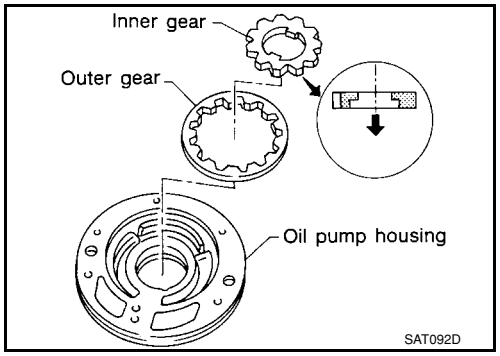

4. Remove oil pump housing oil seal using a flat-bladed screwdriver.
CAUTION:
Be careful not to scratch oil pump housing.

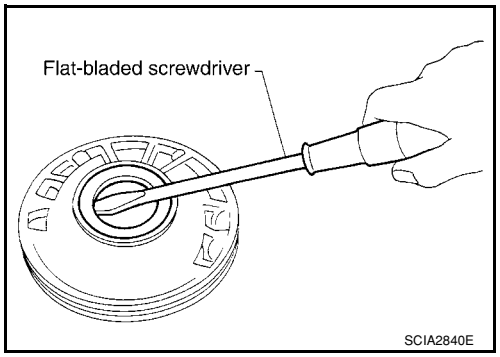

INSPECTION

Oil Pump Housing, Oil Pump Cover, Inner Gear and Outer Gear
Check for wear or damage. Replace if necessary.

Side Clearances

- Measure side clearance of inner gear and outer gear in at least four places around each outside edge. Clearances measured values should be within the specified clearance.

Standard clearance: Refer to AT-345, "Oil Pump".

- If clearance is less than standard, select inner gear and outer gear as a set so that clearance is within specifications. Refer to “Parts Information” for the inner gear and outer gear selection.
- If clearance is more than standard, replace whole oil pump assembly except oil pump cover.

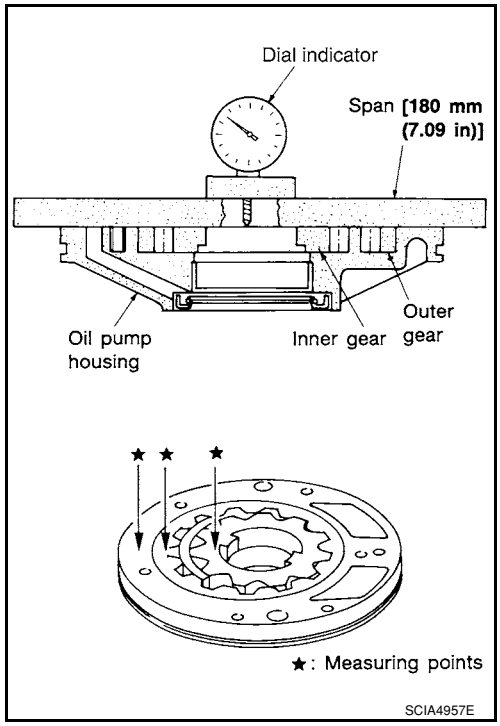

- Measure clearance between outer gear and oil pump housing.

Standard clearance and allowable limit:
Refer to AT-345, "Oil Pump".

- If not within allowable limit, replace whole oil pump assembly except oil pump cover.

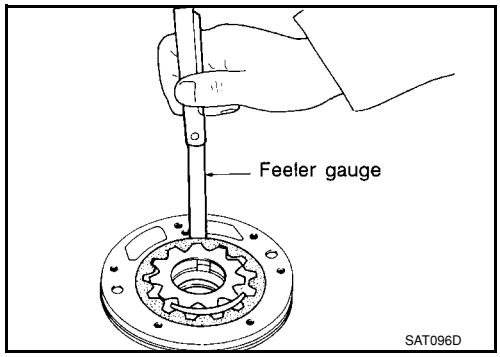

Seal Ring Clearance

- Measure clearance between seal ring and ring groove.

Standard clearance and allowable limit:
Refer to AT-345, "Oil Pump".

- If not within allowable limit, replace oil pump cover assembly.

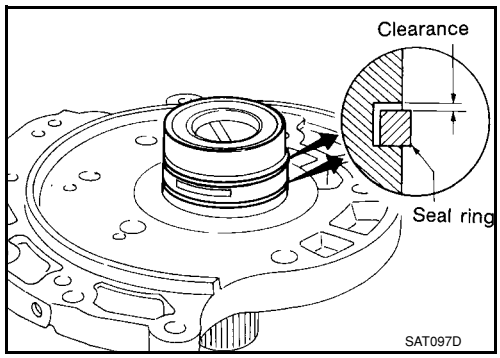

ASSEMBLY

1. Install oil pump housing oil seal on oil pump housing.
   CAUTION:
   - **Do not reuse oil pump housing oil seal.**
   - **Apply ATF to outer surface of oil pump housing oil seal.**

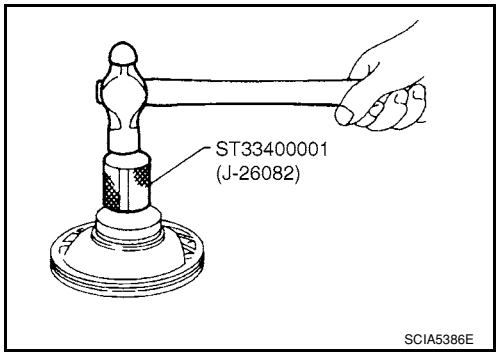

2. Install inner gear and outer gear on oil pump housing.
   CAUTION:
   Be careful with the direction of inner gear.

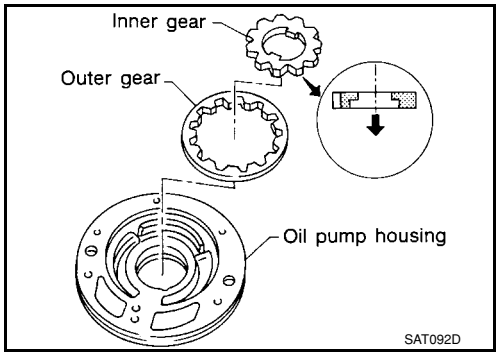

3. Install oil pump cover on oil pump housing.
   a. Wrap masking tape around splines of oil pump cover assembly to protect seal. Position oil pump cover assembly on oil pump housing assembly, then remove masking tape.
   b. Tighten oil pump cover fitting bolts in the order as shown in the figure, and then tighten them to the specified torque in the same order. Refer to "COMPONENTS".

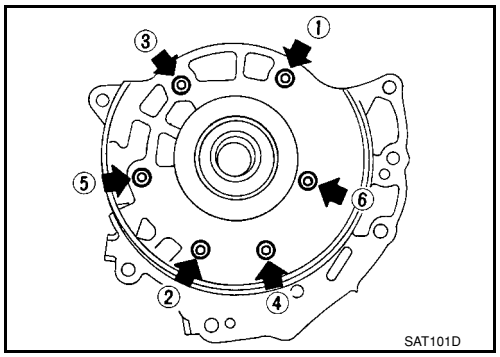

4. Install seal rings (1) to oil pump assembly (2) carefully after packing ring groove with petroleum jelly.
   CAUTION:
   Do not spread gap of seal rings (1) excessively while installing. The seal rings (1) may be deformed.

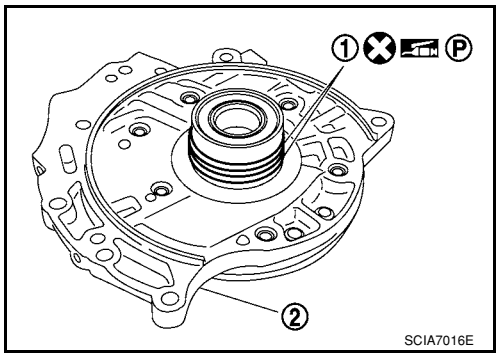

Control Valve Assembly

INFOID:0000000001703380

COMPONENTS

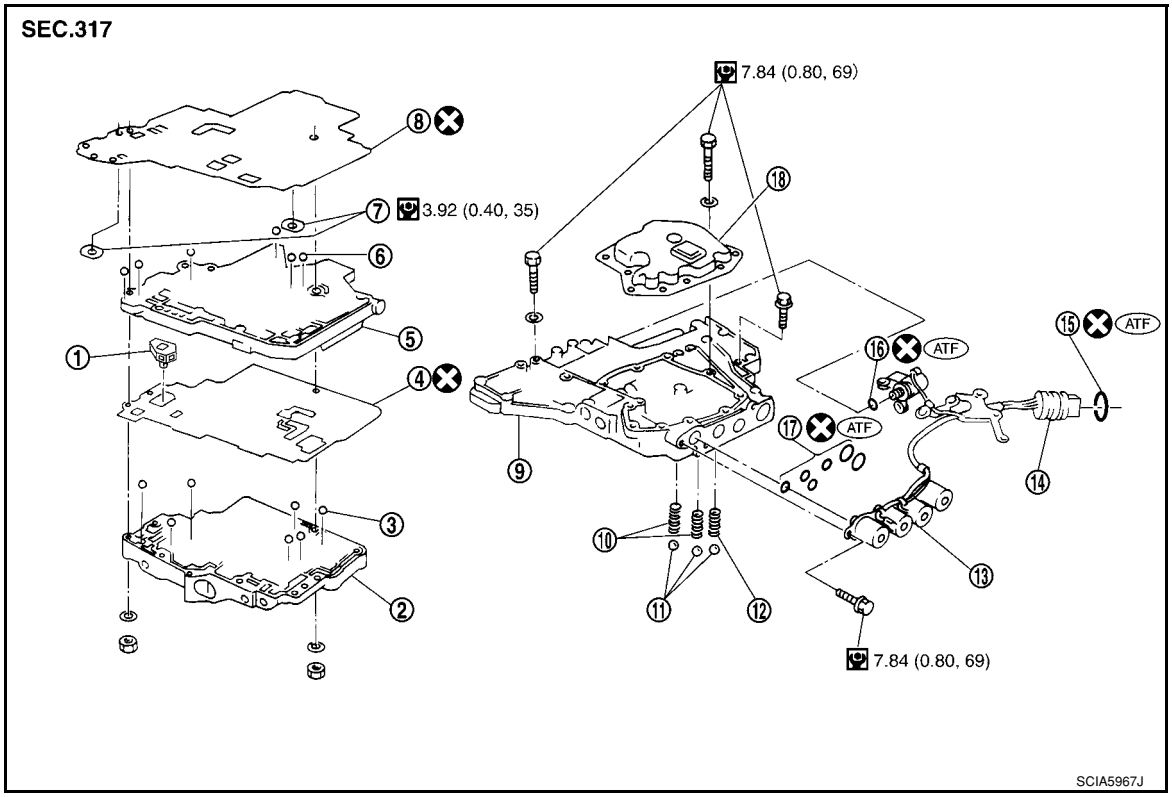

1. Pilot filter	2. Control valve upper body	3. Steel ball
4. Separating plate	5. Control valve inter body	6. Steel ball
7. Support plate	8. Separating plate	9. Control valve lower body
10. Line pressure relief valve spring	11. Check ball	12. Torque converter pressure holding spring
13. Solenoid valve assembly	14. Terminal body	15. O-ring
16. O-ring	17. O-ring	18. Oil strainer

Refer to GI section to make sure icons (symbol marks) in the figure. Refer to GI-8, "Component".

DISASSEMBLY

Place control valve assembly with control valve upper body (1) side down. Remove bolts (A) to (G), reamer bolts (F), nuts and support plates (4) according to the following procedures. Separate control valve upper body (1), control valve inter body (2) and control valve lower body (3).

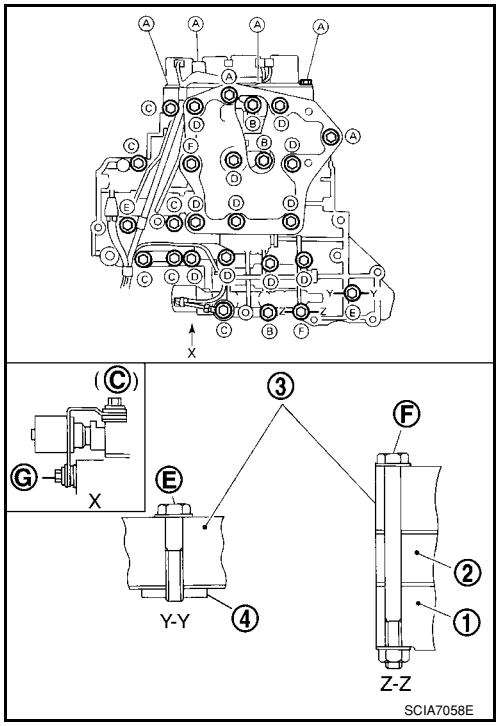

Bolt length, number and location:

Bolt symbol	A	B	C	D	E	F*	G
Bolt length "ℓ" [mm (in)] ℓ	13.5 (0.531)	58.0 (2.283)	40.0 (1.575)	66.0 (2.598)	33.0 (1.299)	78.0 (3.071)	18.0 (0.709)
Number of bolts	6	3	6	11	2	2	1

*: Reamer bolt and nut.

1. Remove bolts (A), (D), reamer bolt (F) and nut, and remove oil strainer (1) from control valve assembly.

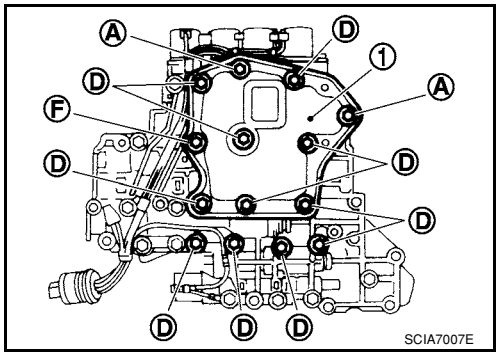

2. Remove bolts (A), (C) and (G), and then remove solenoid valve assembly (1) from control valve assembly.

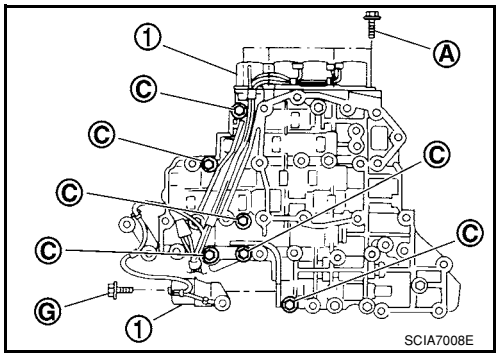

3. Remove O-rings from solenoid valves and terminal body.

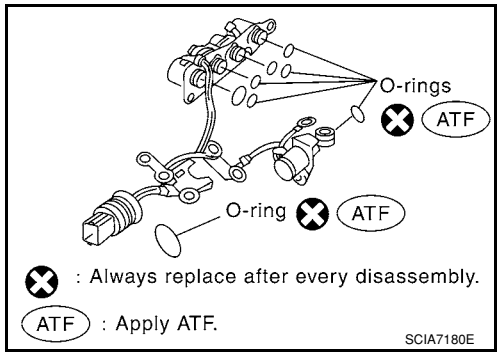

4. Place control valve upper body face down, and remove bolts (B), reamer bolt (F) and nut.
CAUTION:
Remove bolts with control valve upper body facing down, because control valve upper body and control valve inter body may come off and steel ball may fall and be lost.

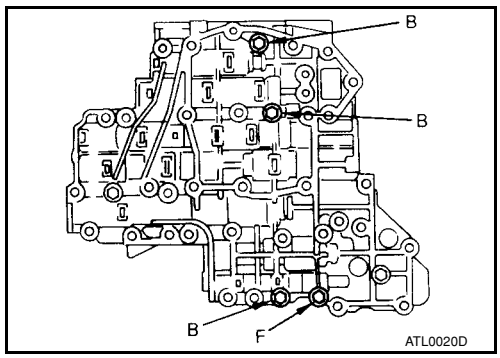

5. Remove control valve lower body (1) from control valve inter body (2).
(3): Control valve upper body

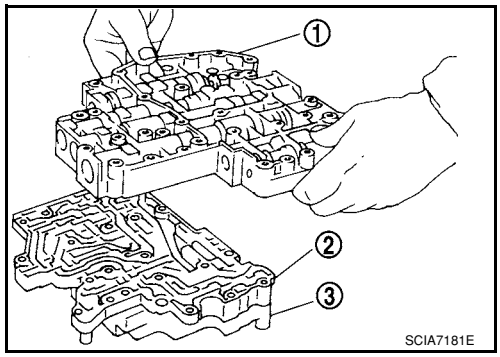

6. Turn over control valve lower body (1).
7. Remove bolts (E), support plates (2) and separating plate (3) from control valve lower body (1).

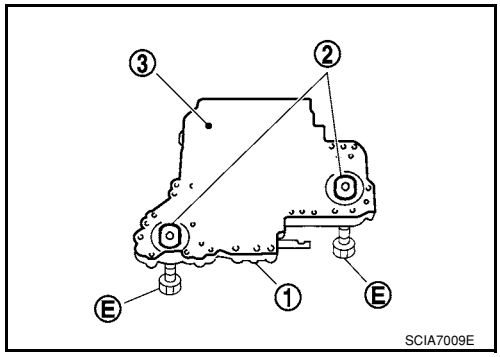

8. Remove check balls (1), line pressure relief valve springs (2) and torque converter pressure holding spring (3) from control valve lower body (4).
CAUTION:
Be careful not to lose check balls (1), line pressure relief valve springs (2) and torque converter pressure holding spring (3).

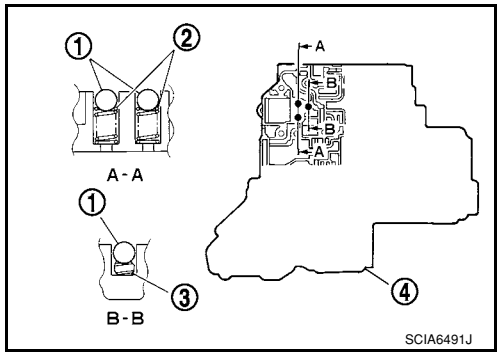

9. Remove control valve inter body from control valve upper body.

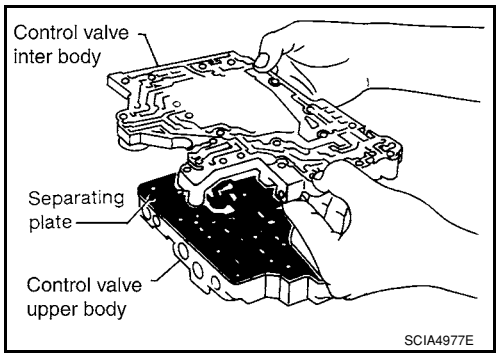

10. Remove pilot filter (1) from control valve upper body (2).
11. Remove separating plate from control valve upper body (2).

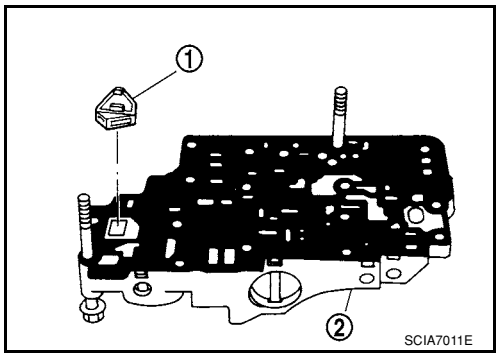

12. Check to see that steel balls are properly positioned in control valve inter body and then remove them.
CAUTION:
Be careful not to lose steel balls.

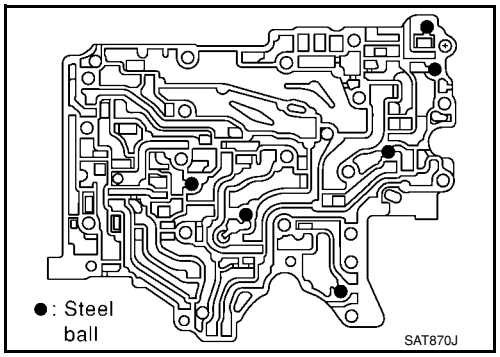

13. Check to see that steel balls are properly positioned in control valve upper body and then remove them.
CAUTION:
Be careful not to lose steel balls.

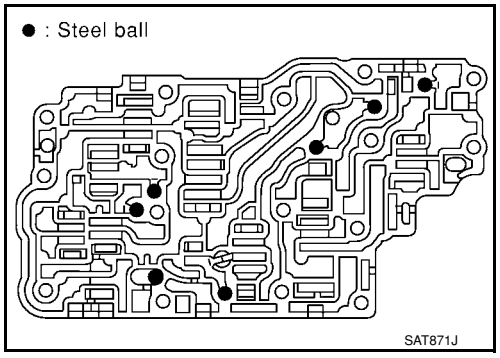

INSPECTION

Control Valve Lower and Upper Bodies

CAUTION:
Be careful not to lose these parts.

- Check to see that retainer plates are properly positioned in control valve lower body.

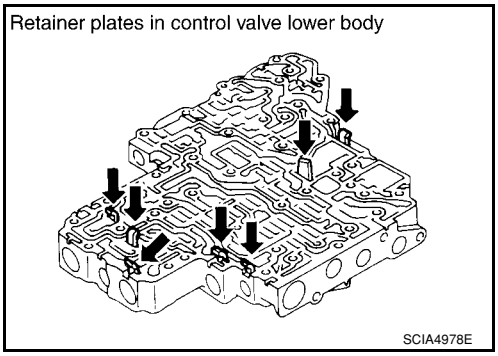

- Check to see that retainer plates are properly positioned in control valve upper body.

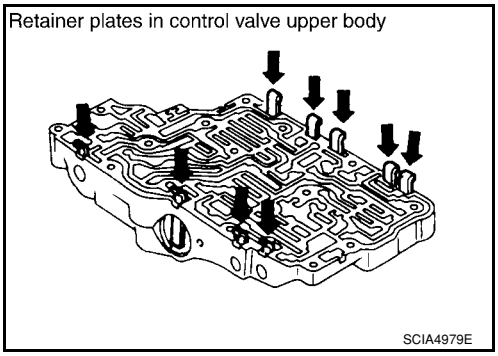

Oil Strainer
Check wire netting of oil strainer for damage. Replace if necessary.

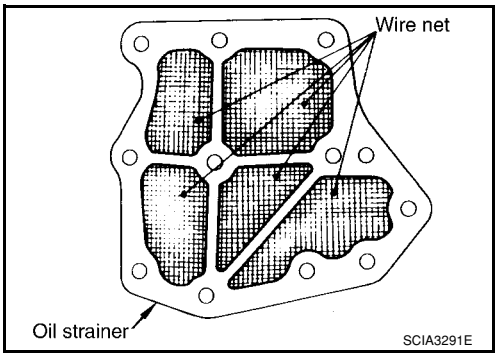

Shift Solenoid Valves “A” and “B”, Line Pressure Solenoid Valve, Torque Converter Clutch Solenoid Valve and Overrun Clutch Solenoid Valve
Measure resistance.

- For shift solenoid valve A, refer to AT-137, "Component Inspection".
- For shift solenoid valve B, refer to AT-142, "Component Inspection".
- For line pressure solenoid valve, refer to AT-133, "Component Inspection".
- For torque converter clutch solenoid valve, refer to AT-122, "Component Inspection".
- For overrun clutch solenoid valve, refer to AT-147, "Component Inspection".

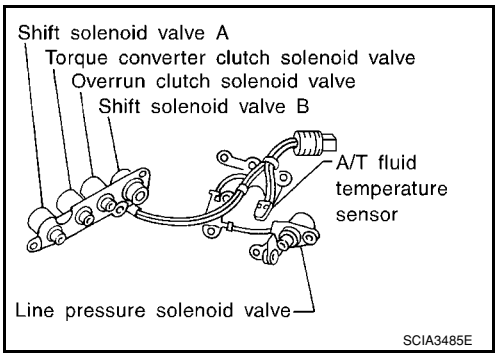

A/T Fluid Temperature Sensor
Measure resistance.

- For A/T fluid temperature sensor, refer to AT-156, "Component Inspection".

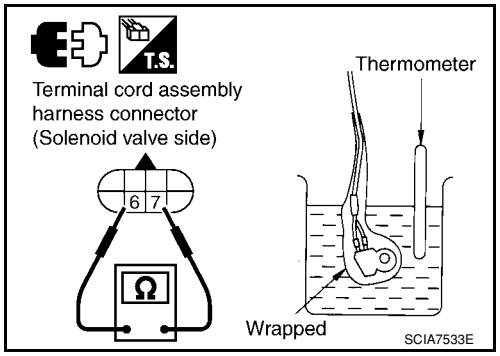

Line Pressure Relief Valve Springs and Torque Converter Pressure Holding Spring

- Check each spring for damage or deformation. Also measure free length and outer diameter. Refer to AT-343, "Control Valves".
- Replace springs if deformed or fatigued.

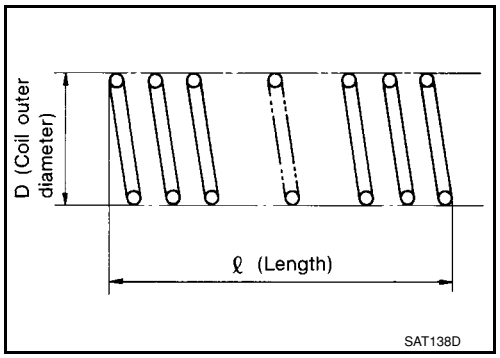

ASSEMBLY

1. Install control valve upper, inter and lower body.

a. Place oil circuit of control valve upper body face up. Install steel balls in their proper positions.

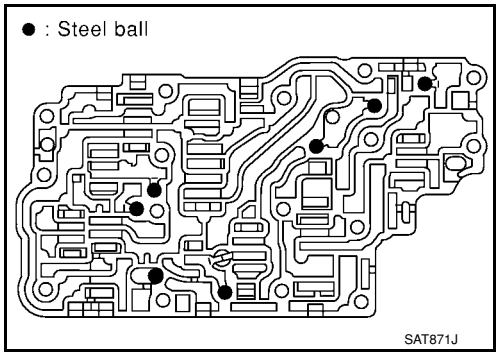

b. Install reamer bolts (F) from bottom of control valve upper body (1). Using reamer bolts (F) as guides, install separating plate (2) as a set.

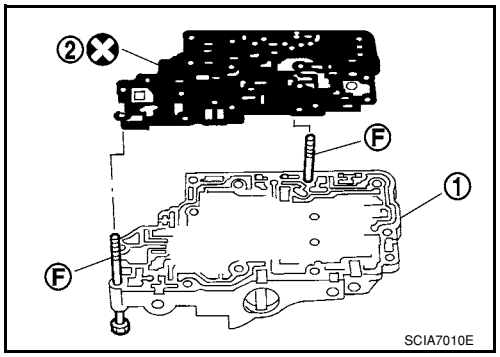

c. Install pilot filter (1) on control valve upper body (2).

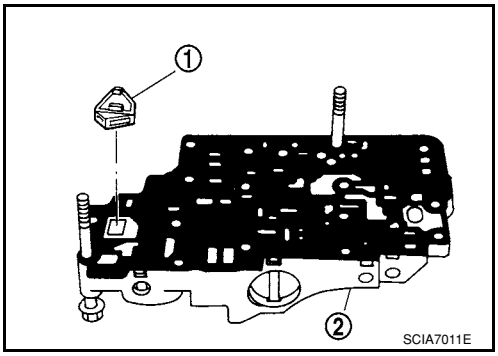

d. Place control valve inter body as shown in figure (side of control valve lower body face up). Install steel balls in their proper positions.

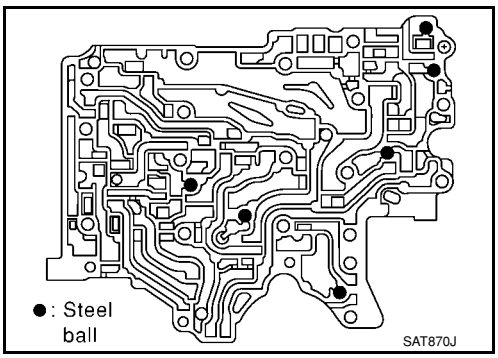

e. Install control valve inter body (1) on control valve upper body (2) using reamer bolts (F) as guides.
CAUTION:
Be careful not to dislocate or drop steel balls.

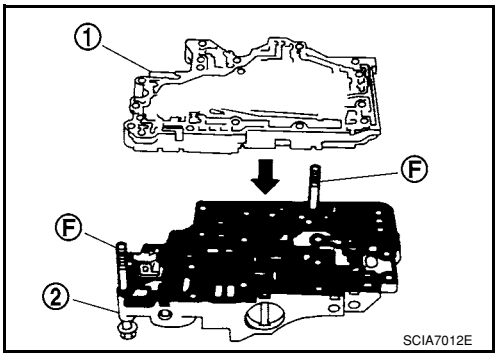

f. Install check balls (1), line pressure relief valve springs (2) and torque converter pressure holding spring (3) in their proper positions in control valve lower body (4).

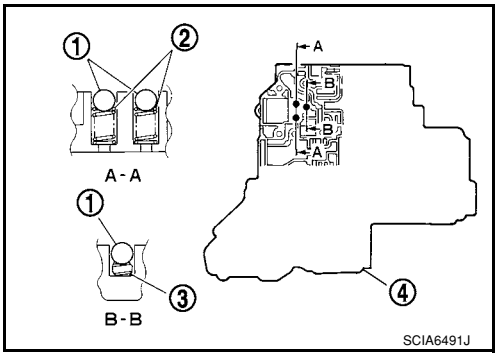

g. Install bolts (E) from bottom of control valve lower body (1). Using bolts (E) as guides, install separating plate (2) as a set.

h. Install support plates (3) on control valve lower body (1).

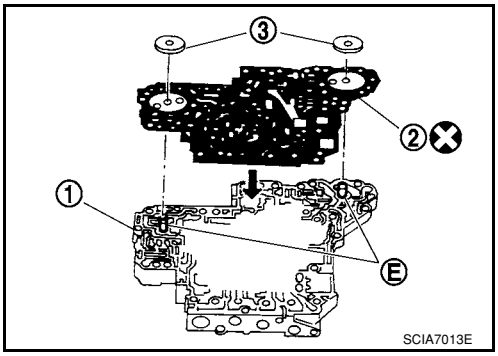

i. Install control valve lower body (1) on control valve inter body (2) using reamer bolts (F) as guides, and tighten reamer bolts (F) slightly.

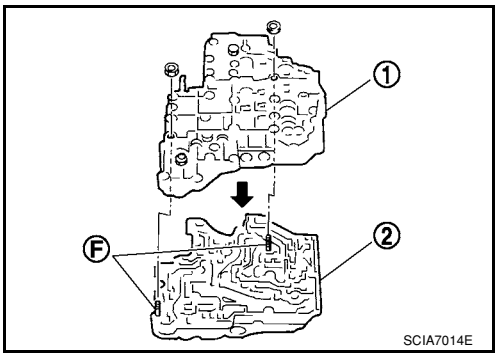

2. Install O-rings on solenoid valves and terminal body.

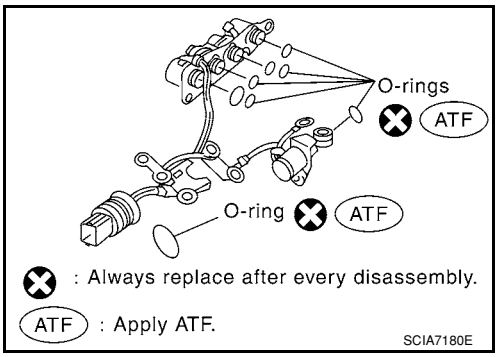

3. Install and tighten bolts.
   (1): Control valve upper body
   (2): Control valve inter body
   (3): Control valve lower body
   (4): Support plate

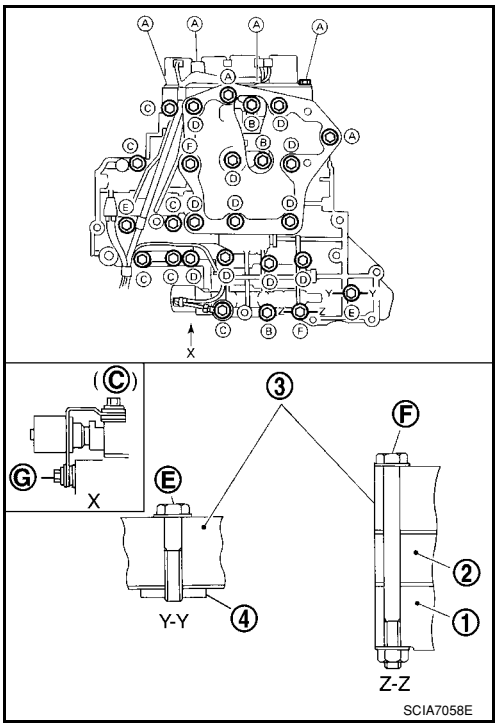

Bolt length, number and location:

Bolt symbol	A	B	C	D	E	F*	G
Bolt length "ℓ" [mm (in)]	13.5 (0.531)	58.0 (2.283)	40.0 (1.575)	66.0 (2.598)	33.0 (1.299)	78.0 (3.071)	18.0 (0.709)
Number of bolts	6	3	6	11	2	2	1
Tightening torque [N·m (kg-m, in-lb)]	7.84 (0.80, 69)				3.92 (0.40, 35)	7.84 (0.80, 69)	

*: Reamer bolt and nut.

a. Install and tighten bolts (B) to the specified torque.

: **7.84 N·m (0.80 kg-m, 69 in-lb)**

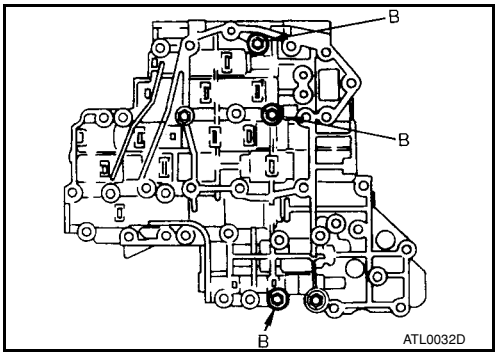

b. Install solenoid valve assembly (1) on control valve assembly.
c. Tighten bolts (A), (C) and (G) to the specified torque.

: **7.84 N·m (0.80 kg-m, 69 in-lb)**

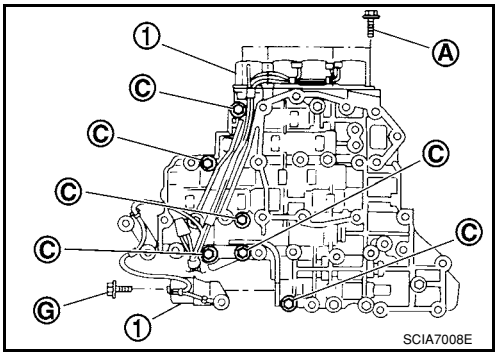

d. Remove reamer bolts (F), and then set oil strainer (1) on control valve assembly
e. Install and tighten bolts (A), (D), reamer bolts (F) and nuts to the specified torque.

: **7.84 N·m (0.80 kg-m, 69 in-lb)**

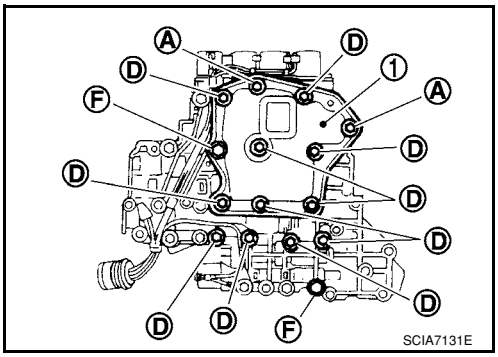

f. Tighten bolts (E) to the specified torque.

: **3.92 N·m (0.40 kg-m, 35 in-lb)**

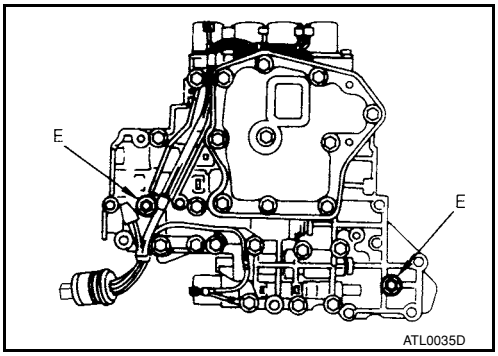

Control Valve Upper Body

INFOID:0000000001703381

COMPONENTS

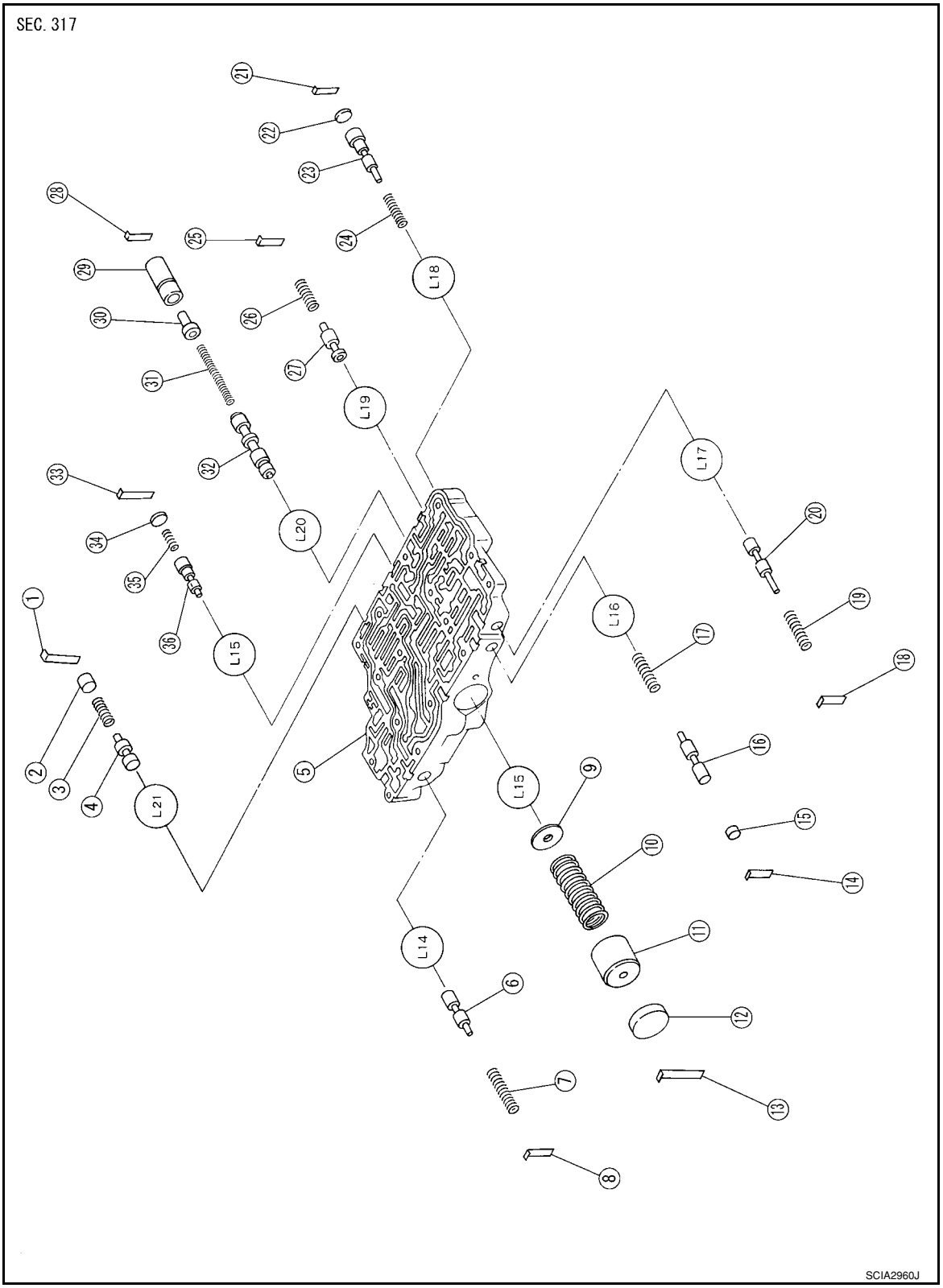

1. Retainer plate
2. Plug
3. Cooler check valve spring
4. Cooler check valve
5. Control valve upper body
6. Pilot valve
7. Pilot valve spring
8. Retainer plate
9. 1-2 accumulator retainer plate
10. 1-2 accumulator piston spring
11. 1-2 accumulator piston
12. Plug
13. Retainer plate
14. Retainer plate
15. Plug
16. 1st reducing valve
17. 1st reducing valve spring
18. Retainer plate

19. 3-2 timing valve spring	20. 3-2 timing valve	21. Retainer plate
22. Plug	23. Overrun clutch reducing valve	24. Overrun clutch reducing valve spring
25. Retainer plate	26. Torque converter relief valve spring	27. Torque converter relief valve
28. Retainer plate	29. Sleeve	30. Plug
31. Torque converter clutch control valve spring	32. Torque converter clutch control valve	33. Retainer plate
34. Plug	35. 1-2 accumulator valve spring	36. 1-2 accumulator valve

DISASSEMBLY

1. Remove valves at retainer plates.
   CAUTION:
   Do not use a magnetic pick-up tool.

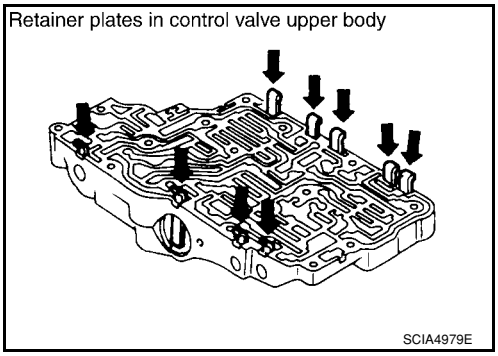

a. Use a flat-bladed screwdriver A to remove retainer plates (1).

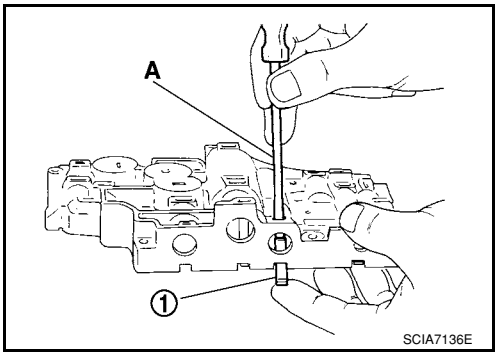

b. Remove retainer plates (1) while holding spring, plugs (2) or sleeves using a flat-bladed screwdriver A.
   CAUTION:
   Remove plugs (2) slowly to prevent internal parts from jumping out.

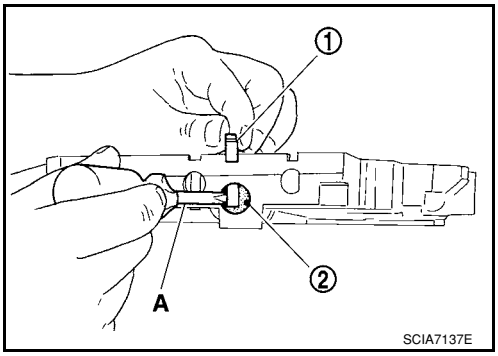

c. Place mating surface of valve body face down, and remove internal parts.
   CAUTION:
   - **If a valve is hard to remove, place valve body face down and lightly tap it with a soft hammer.**
   - **Be careful not to drop or damage valves and sleeves.**

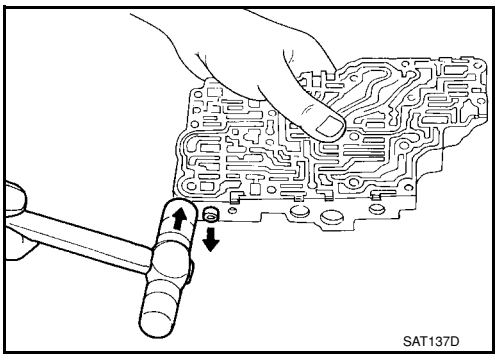

INSPECTION

Valve Springs

- Check each valve spring for damage or deformation. Also measure free length and outer diameter. Refer to AT-343, "Control Valves".
- Replace valve springs if deformed or fatigued.

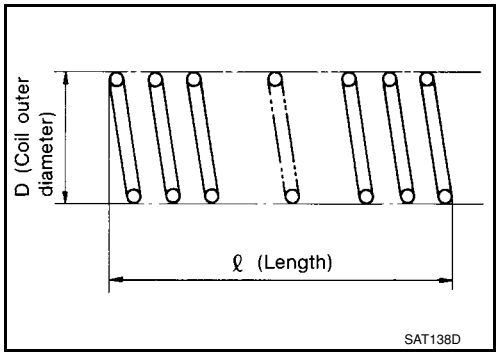

Control Valves

Check sliding surfaces of valves, sleeves and plugs. Replace if necessary.

ASSEMBLY

CAUTION:

- **Apply ATF to all components before installation.**
- **Lay control valve body down when installing valves. Do not stand control valve body upright.**

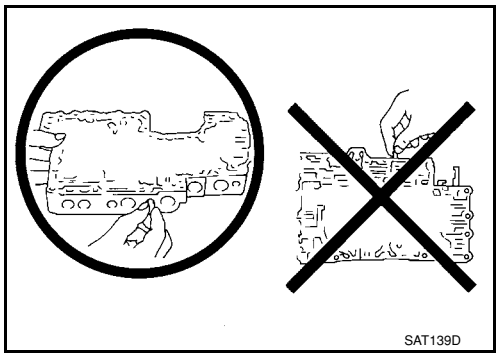

Lubricate control valve body and all valves with ATF. Install control valves by sliding them carefully into their bores.

CAUTION:

- **Install each control valve one by one.**
- **Install control valves after checking, because some of them are similar.**
- **Be careful not to scratch or damage valve body.**

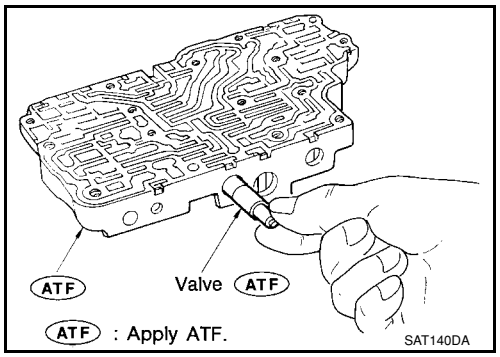

- Wrap a small flat-bladed screwdriver A with vinyl tape and use it to insert valves into their proper positions.

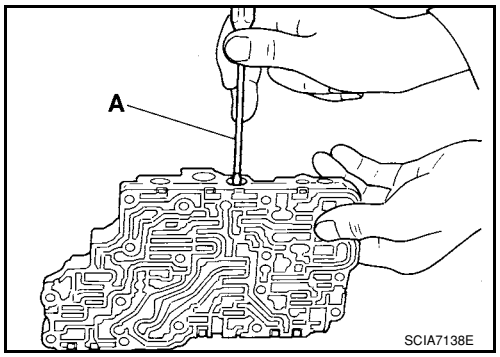

- Install retainer plates (1).
- While pushing plug or return spring, install retainer plate (1) using a flat-bladed screwdriver A.

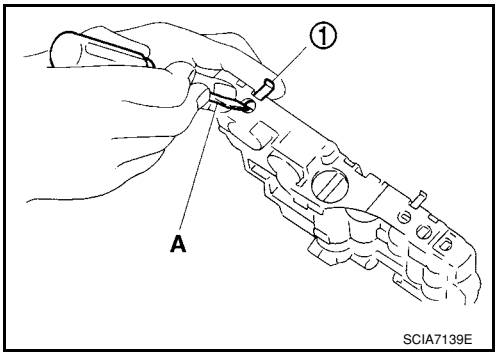

1-2 Accumulator Valve

- Install 1-2 accumulator valve (1), 1-2 accumulator valve spring and plug. Align 1-2 accumulator retainer plate (2) from opposite side of control valve body.
- Install 1-2 accumulator valve piston spring (3), 1-2 accumulator piston (4), plug (5) and retainer plate (6).

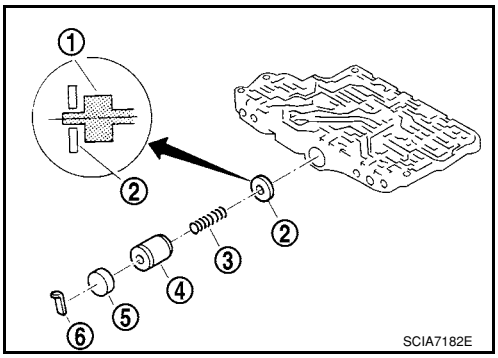

Retainer Plate (Control Valve Upper Body)
Install proper retainer plates. Refer to "COMPONENTS".

Unit: mm (in)

Location	Retainer plate designation	Width “A”	Length “B”
L14	Pilot valve	6.0 (0.236)	21.5 (0.846)
L15	1-2 accumulator valve		40.5 (1.594)
	1-2 accumulator piston		
L16	1st reducing valve		21.5 (0.846)
L17	3-2 timing valve		
L18	Overrun clutch reducing valve		24.0 (0.945)
L19	Torque converter relief valve		21.5 (0.846)
L20	Torque converter clutch control valve		28.0 (1.102)
L21	Cooler check valve		24.0 (0.945)

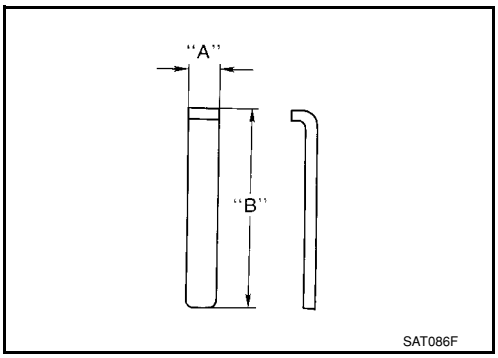

Control Valve Lower Body

INFOID:0000000001703382

COMPONENTS

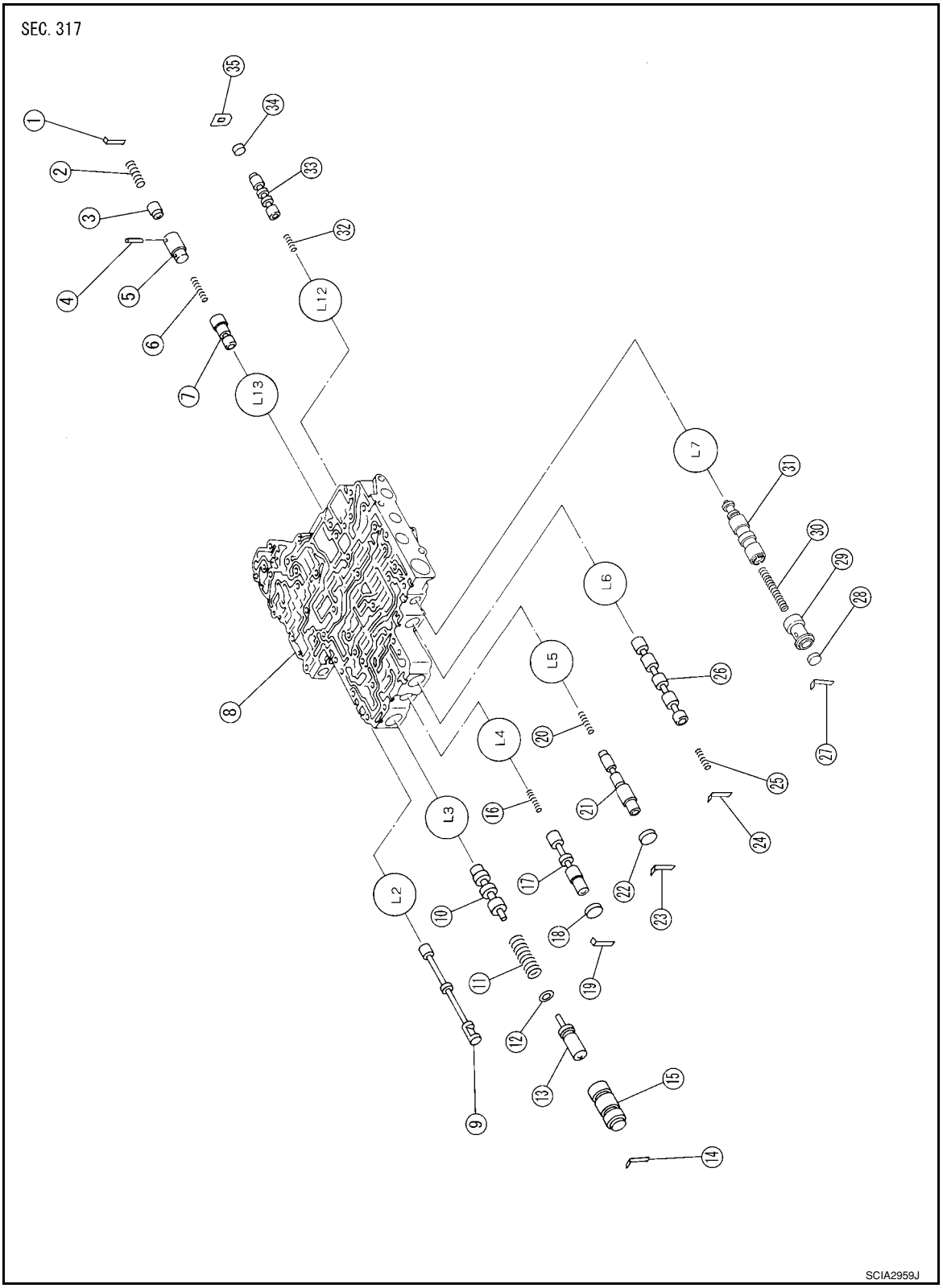

1. Retainer plate
2. Pressure modifier piston spring
3. Pressure modifier piston
4. Parallel pin
5. Sleeve
6. Pressure modifier valve spring
7. Pressure modifier valve
8. Control valve lower body
9. Manual valve
10. Pressure regulator valve
11. Pressure regulator valve spring
12. Spring seat
13. Plug
14. Retainer plate
15. Sleeve
16. Overrun clutch control valve spring
17. Overrun clutch control valve
18. Plug

19. Retainer plate
20. Accumulator control valve spring
21. Accumulator control valve
22. Plug
23. Retainer plate
24. Retainer plate
25. Shift valve A spring
26. Shift valve A
27. Retainer plate
28. Plug
29. Shuttle plug
30. Shuttle valve spring
31. Shuttle valve
32. Shift valve B spring
33. Shift valve B
34. Plug
35. Retainer plate

DISASSEMBLY

Remove valves at retainer plate.
For removal procedures, refer to AT-272, "Control Valve Upper Body".

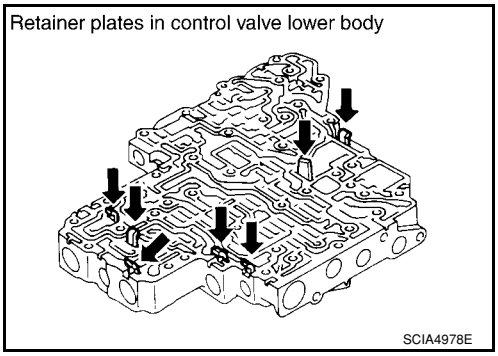

INSPECTION

Valve Springs

- Check each valve spring for damage or deformation. Also measure free length and outer diameter. Refer to AT-343, "Control Valves".
- Replace valve springs if deformed or fatigued.

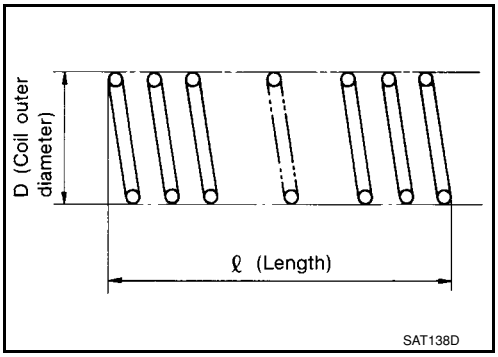

Control Valves

Check sliding surfaces of control valves, sleeves and plugs for damage. Replace if necessary.

ASSEMBLY

CAUTION:

- **Apply ATF to all components before installation.**
- **Lay control valve body down when installing valves. Do not stand control valve body upright.**

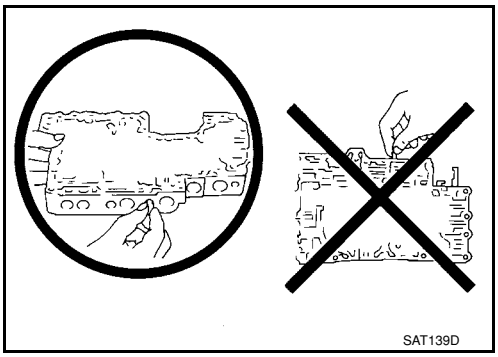

Install control valves.
For installation procedures, refer to AT-272, "Control Valve Upper Body".

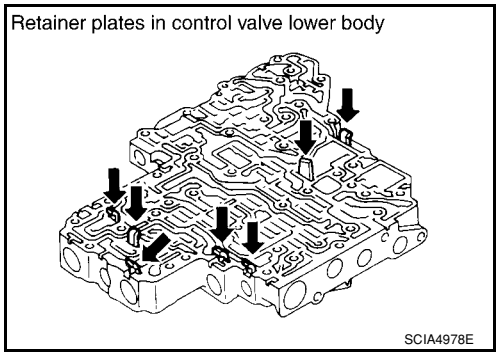

Retainer Plate (Control Valve Lower Body)
Install proper retainer plates. Refer to "COMPONENTS".

Unit: mm (in)

Location	Retainer plate designation	Width "A"	Length "B"	Type
L3	Pressure regulator valve	6.0 (0.236)	28.0 (1.102)	I
L4	Overrun clutch control valve			
L5	Accumulator control valve			
L6	Shift valve A			
L7	Shuttle valve			
L12	Shift valve B	17.0 (0.669)	24.0 (0.945)	II
L13	Pressure modifier valve	6.0 (0.236)	28.0 (1.102)	I

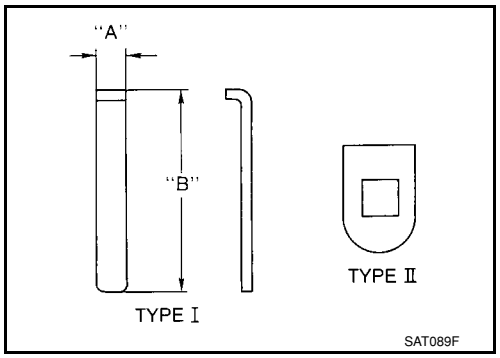

Reverse Clutch

INFOID:0000000001703383

COMPONENTS

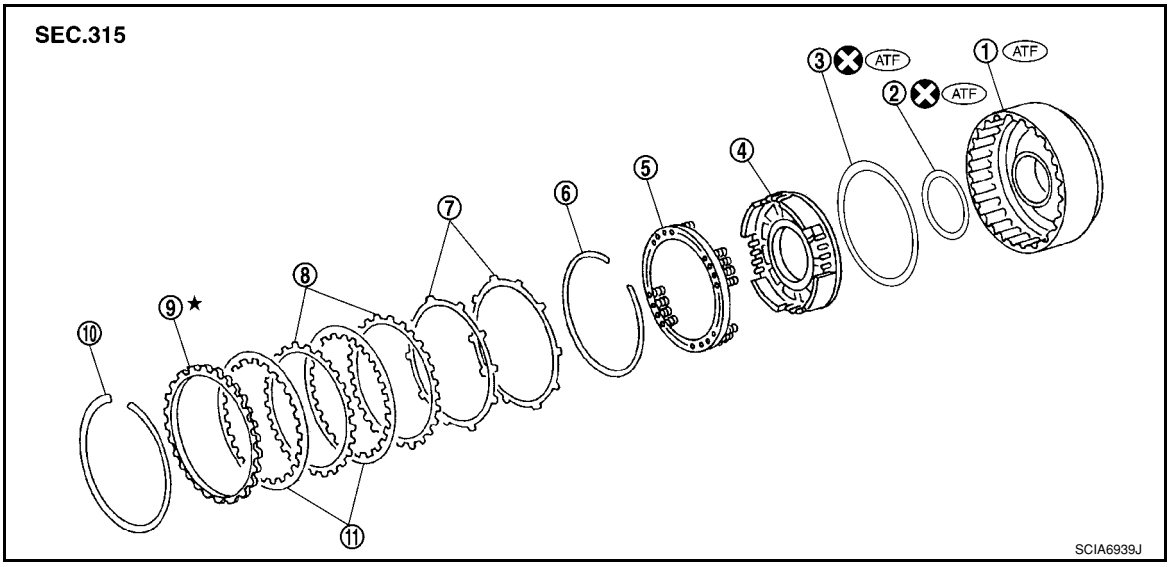

1. Reverse clutch drum
2. D-ring
3. Seal lip
4. Reverse clutch piston
5. Spring retainer assembly
6. Snap ring
7. Dish plate
8. Driven plate
9. Retaining plate
10. Snap ring
11. Drive plate

Refer to GI section to make sure icons (symbol marks) in the figure. Refer to GI-8, "Component".

DISASSEMBLY

1. Check operation of reverse clutch

a. Install seal rings to drum support of oil pump assembly, and set reverse clutch assembly.

b. Apply compressed air into the oil hole at the location as shown in the figure.

c. Check to see that retaining plate moves to snap ring.

d. If retaining plate does not contact snap ring:
   - D-ring might be damaged.
   - Seal lip might be damaged.
   - Fluid might be leaking past piston check ball.

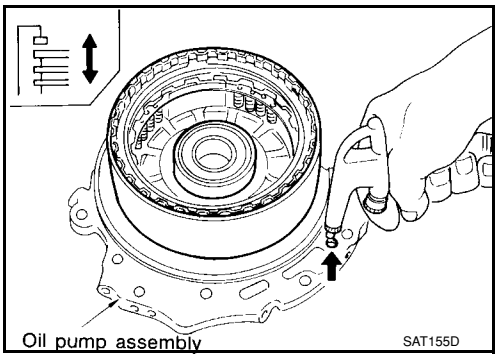

2. Remove snap ring (1) using a flat-bladed screwdriver A.

3. Remove retaining plate, drive plates, driven plates and dish plates.

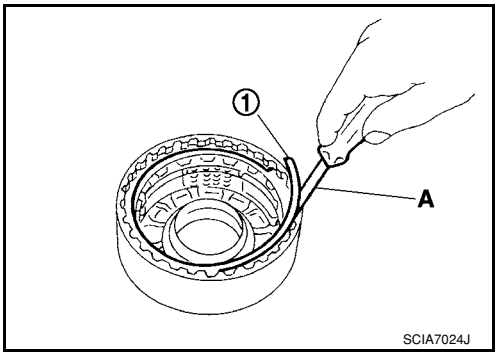

4. Set Tool A on spring retainer assembly, and remove snap ring (1) from reverse clutch drum while compressing spring retainer assembly.

   Tool number: KV31103200 (J-39186)

   CAUTION:
   Set SST directly over return springs.

5. Remove spring retainer assembly from reverse clutch drum.
   CAUTION:
   Do not remove return springs from spring retainer.

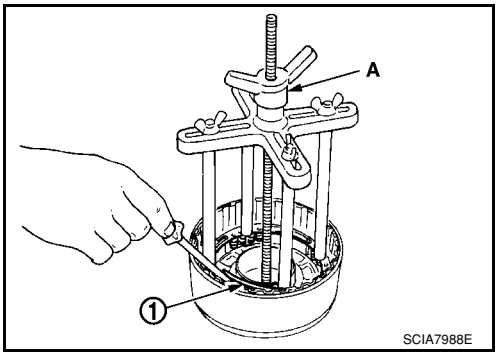

6. Install seal rings to drum support of oil pump assembly (1), and set reverse clutch drum (2). Then apply compressed air into the oil hole at the location as shown in the figure to remove reverse clutch piston (3) from reverse clutch drum (2).
   CAUTION:
   Do not flow air in too quickly or reverse clutch piston (3) and ATF could jump out. Carefully flow air in little by little while protecting with lint-free cloth.

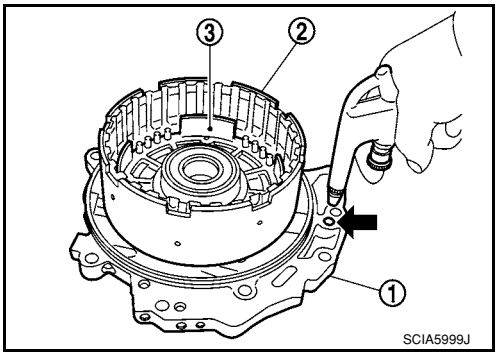

7. Remove D-ring (1) and seal lip (2) from reverse clutch piston (3).

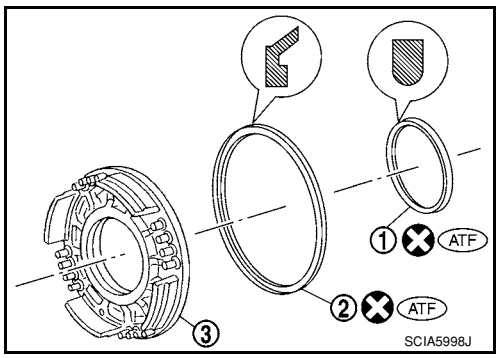

INSPECTION

Reverse Clutch Snap Ring

Check for deformation, fatigue or damage. Replace if necessary.

Reverse Clutch Drive Plates

- Check facing for burns, cracks or damage. Replace if necessary.
- Measure thickness of facing.

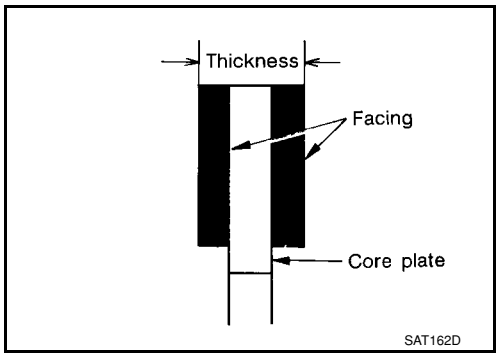

Thickness of drive plate

Standard and allowable limit:

Refer to AT-343, "Clutches and Brakes".

CAUTION:

- **Measure the thickness at 3 locations and find the average.**
- **Inspect all drive plates.**
- **Replace if the thickness is below the allowable limit.**

Reverse Clutch Dish Plates

- Check for deformation or damage.
- Measure thickness (t) of dish plate. Replace if damaged, deformed or worn.

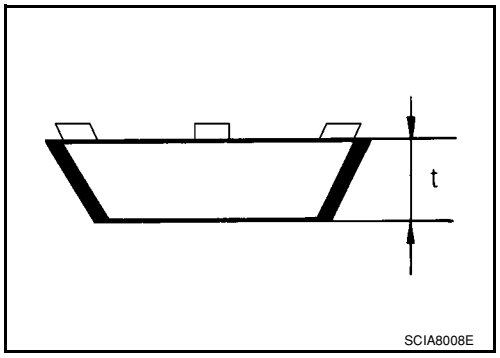

Thickness of dish plate (t): 2.87 mm (0.1130 in)

Reverse Clutch Spring Retainer Assembly

Measure length (L) of spring retainer assembly. Replace if damaged, deformed or worn.

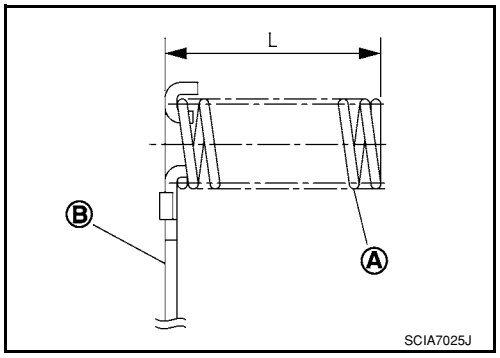

Length (L): 20.1 mm (0.791 in)

CAUTION:

Do not remove return springs (A) from spring retainer (B)

Reverse Clutch Piston

- Make sure that check balls are not fixed.
- Apply compressed air to check ball oil hole opposite from return spring. Make sure there is no air leakage.
- Apply compressed air to oil hole on return spring side to make sure that air leaks past ball.

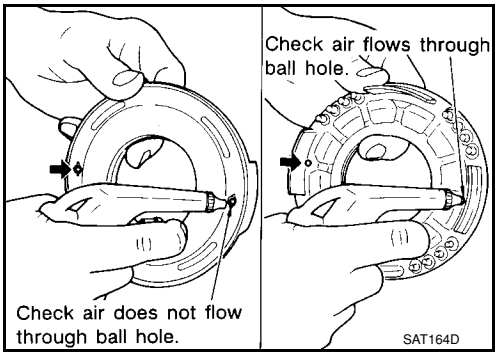

Reverse Clutch Drum
Check for deformation or damage. Replace if necessary.

ASSEMBLY

1. Install D-ring (1) and seal lip (2) on reverse clutch piston (3).
   CAUTION:
   Be careful with the direction of seal lip (2).

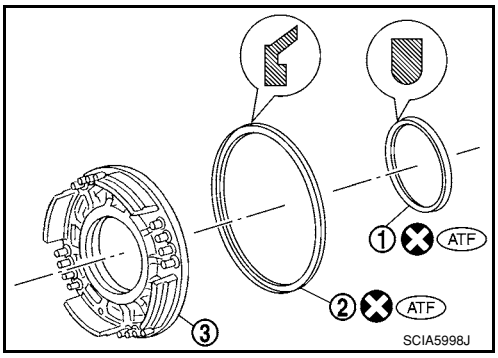

2. Install reverse clutch piston by turning it slowly.
   CAUTION:
   Apply ATF to inner surface of reverse clutch drum.

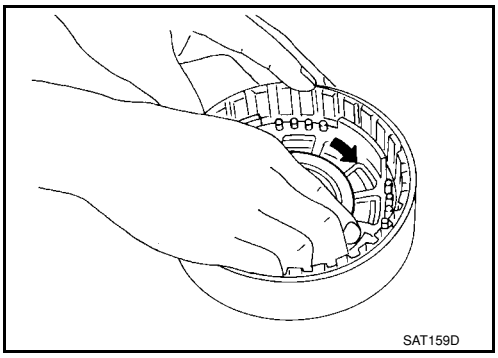

3. Install spring retainer assembly (1) to reverse clutch piston (2).

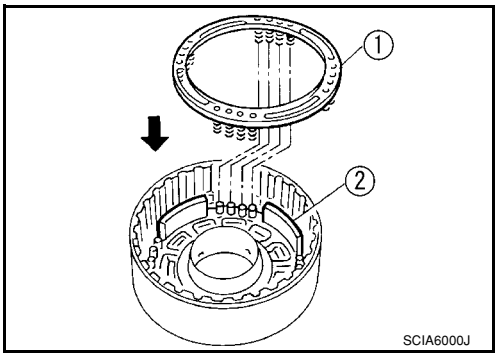

4. Set Tool A on spring retainer assembly, and install snap ring (1) while compressing spring retainer assembly.

Tool number: KV31103200 (J-39186)

CAUTION:
Set SST directly over return springs.

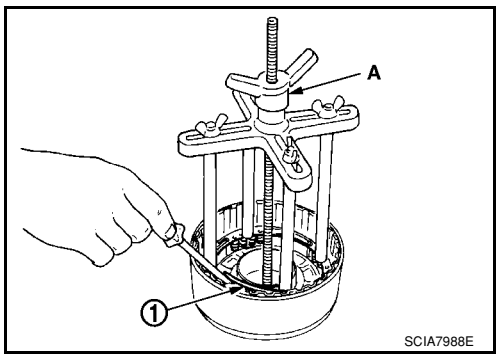

5. Install dish plates, driven plates, drive plates and retaining plate.
(1): Snap ring
(2): Retaining plate
(3): Drive plate
(4): Driven plate
(5): Dish plate
Drive plate/Driven plate: 2/2
CAUTION:
Be careful with the order of plates.

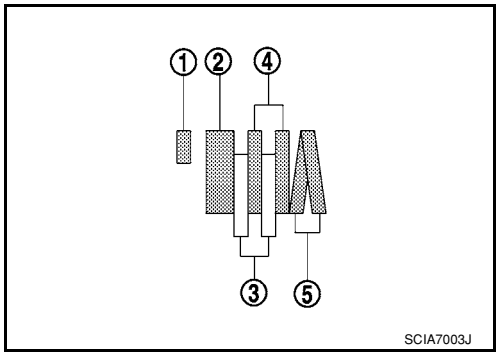

NOTE:
Install two dish plates fitting each installation direction with reverse clutch drum groove displaced slightly.

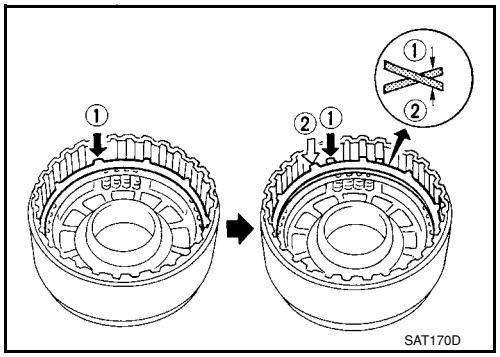

6. Install snap ring (1) using a flat-bladed screwdriver A.

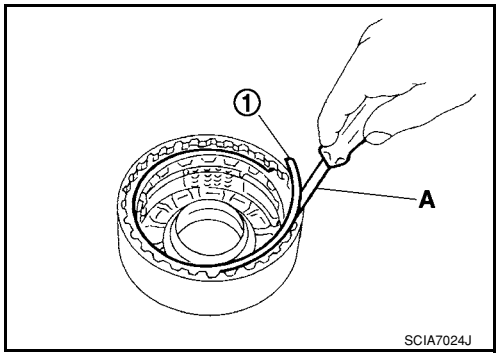

7. Measure clearance between retaining plate and snap ring using feeler gauge. If not within allowable limit, select proper retaining plate. Refer to “Parts Information” for retaining plate selection.

Specified clearance

Standard and allowable limit:

Refer to AT-343, "Clutches and Brakes".

8. Check operation of reverse clutch. Refer to "DISASSEMBLY".

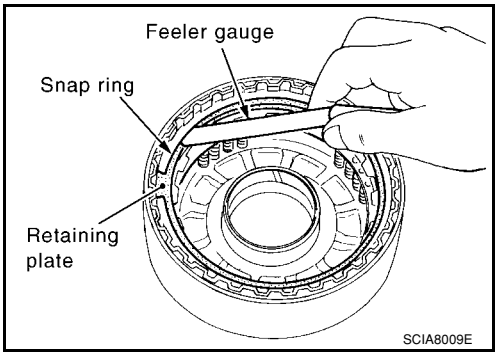

High Clutch

INFOID:0000000001703384

COMPONENTS

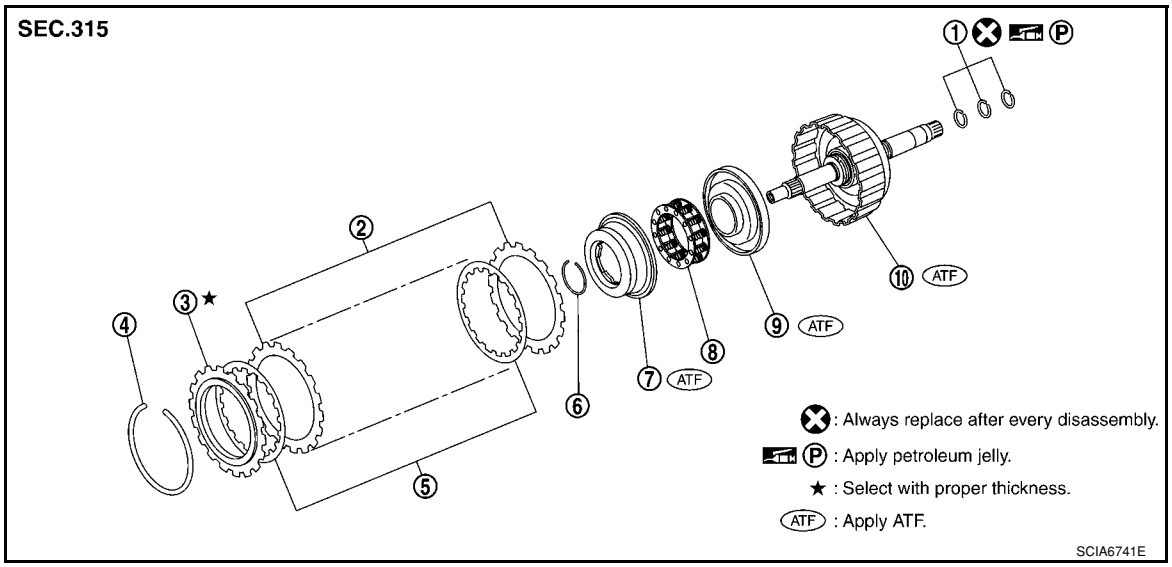

1. Seal ring	2. Driven plate	3. Retaining plate
4. Snap ring	5. Drive plate	6. Snap ring
7. Cancel cover	8. Spring retainer assembly	9. High clutch Piston
10. Input shaft assembly (high clutch drum)		

DISASSEMBLY

1. Check operation of high clutch.

a. Apply compressed air into the oil hole (A) of input shaft assembly (high clutch drum) at the location as shown in the figure.
CAUTION:
Block the oil hole (A) on the opposite side with lint-free cloth B.

b. Check to see that retaining plate moves to snap ring.

c. If retaining plate does not contact snap ring:
- High clutch piston seal might be damaged.

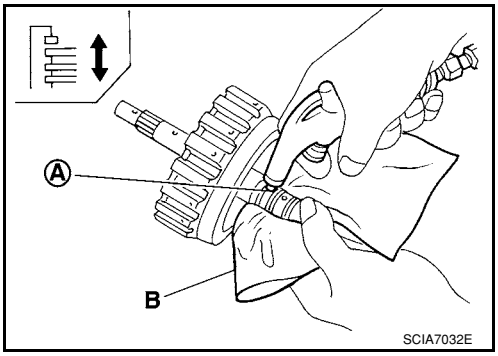

2. Remove seal rings from input shaft assembly (high clutch drum).

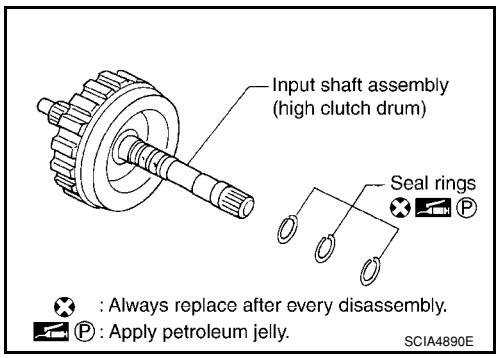

3. Remove snap ring using a flat-bladed screwdriver.
4. Remove retaining plate, drive plates and driven plates.

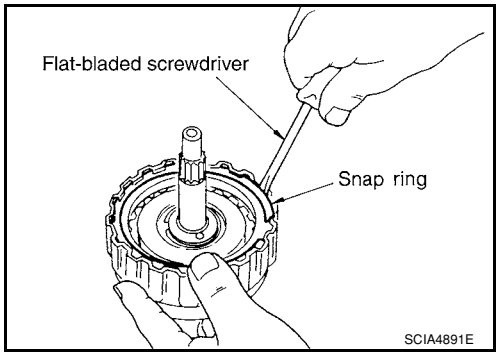

5. Set Tool A on cancel cover, and remove snap ring (1) from input shaft assembly (high clutch drum) while compressing spring retainer assembly.

Tool number: KV31103200 (J-39186)

CAUTION:
Do not expand snap ring (1) excessively.

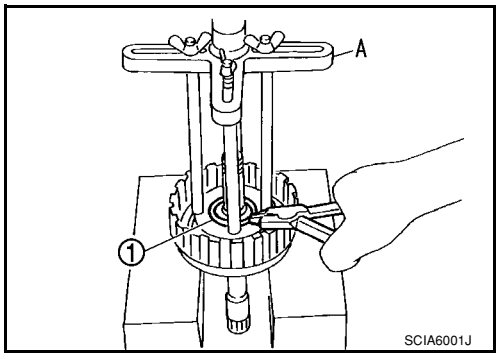

6. Remove cancel cover (1) and spring retainer assembly (2) from input shaft assembly (high clutch drum) (3).
CAUTION:
Do not remove return springs from spring retainers.

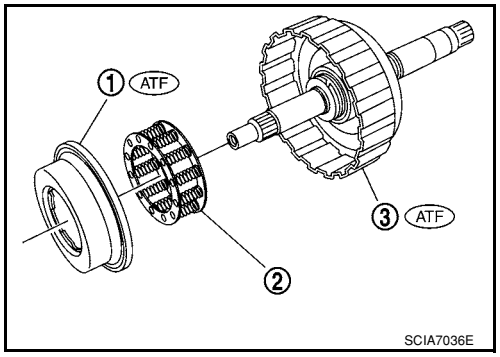

7. Apply compressed air into the oil hole (A) at the location as shown in the figure to remove high clutch piston from input shaft assembly (high clutch drum).
CAUTION:
- **Do not blow air in too quickly, or high clutch piston and ATF could jump out. Carefully blow air little by little while protecting with lint-free cloth B.**
- **Block the oil hole on the opposite side with lint-free cloth B.**

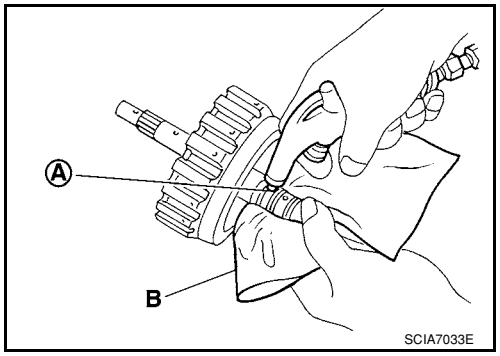

INSPECTION

High Clutch Snap Ring
Check for deformation, fatigue or damage. Replace if necessary.

High Clutch Drive Plates
- Check facing for burns, cracks or damage. Replace if necessary.
- Measure thickness of facing.

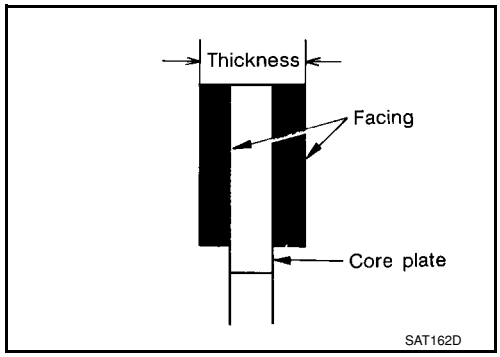

Thickness of drive plate

Standard and allowable limit:

Refer to AT-343, "Clutches and Brakes".

CAUTION:
- **Measure the thickness at 3 locations and find the average.**
- **Inspect all drive plates.**
- **Replace if the thickness is below the allowable limit.**

High Clutch Spring Retainer Assembly
Check length (L) of springs retainer assembly. Replace if damaged, deformed or worn.

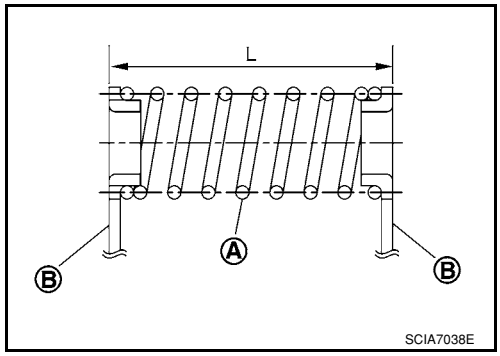

Length (L): 20.6 mm (0.811 in)

CAUTION:
Do not remove return springs (A) from spring retainers (B).

High Clutch Piston and Cancel Cover
Check for deformation or damage. Replace if necessary.

Input Shaft Assembly (High Clutch Drum)
Check for deformation or damage. Replace if necessary.

Seal Ring Clearance
- Install new seal rings onto input shaft assembly (high clutch drum).
- Measure clearance between seal ring and ring groove.

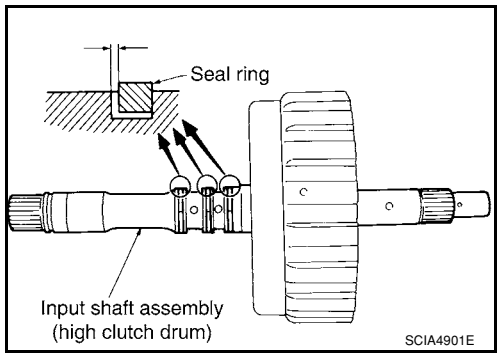

Standard clearance and allowable limit:

Refer to AT-345, "Input Shaft".

- If not within allowable limit, replace input shaft assembly (high clutch drum).

ASSEMBLY

1. Install high clutch piston by turning it slowly.
   CAUTION:
   Apply ATF to inner surface of input shaft assembly (high clutch drum) and high clutch piston.

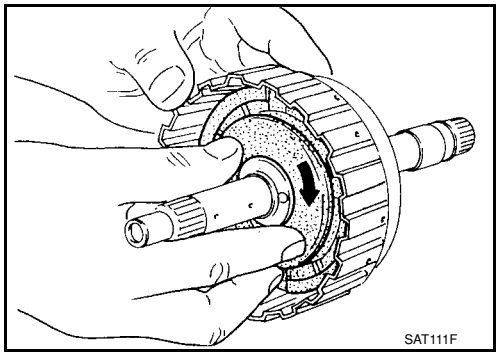

2. Install spring retainer assembly (2) and cancel cover (1) on input shaft assembly (high clutch drum) (3).

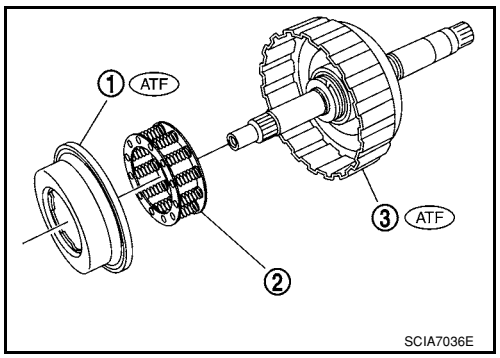

3. Set Tool A on cancel cover, and install snap ring (1) to input shaft assembly (high clutch drum) while slowly compressing spring retainer assembly.

   Tool number: KV31103200 (J-39186)

   CAUTION:
   - **Do not expand snap ring (1) excessively.**
   - **Install spring retainer assembly without tilting.**

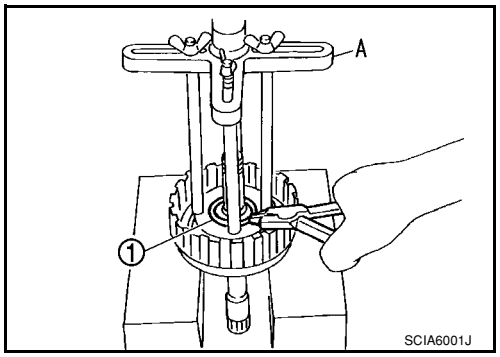

   - **Do not align snap ring gap with cancel cover stopper.**

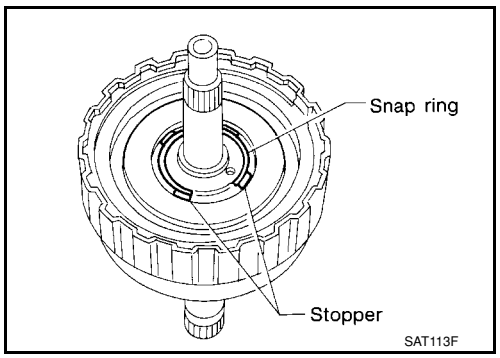

4. Install driven plates, drive plates and retaining plate.
   (1): Snap ring
   (2): Retaining plate
   (3): Drive plate
   (4): Driven plate
   (5): Driven plate
   Drive plate/Driven plate: 4/7 (1+6)
   CAUTION:
   Be careful with the order and direction of plates.

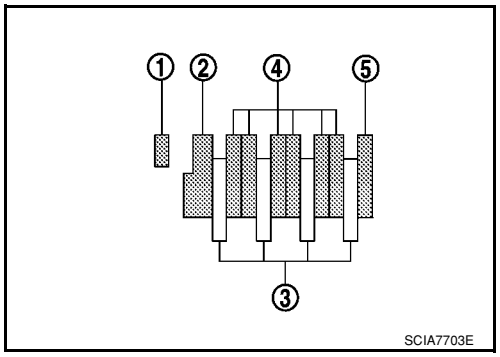

5. Install snap ring using a flat-bladed screwdriver.

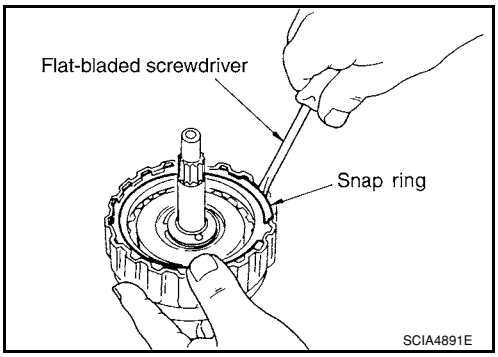

6. Set dial indicator A on retaining plate (1), and measure clearance between retaining plate (1) and snap ring (2). If not within allowable limit, select proper retaining plate (1). Refer to “Parts Information” for retaining plate selection.

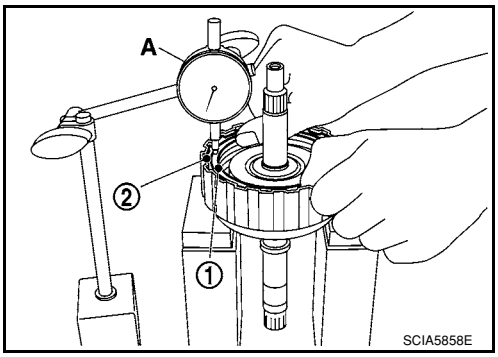

Specified clearance

Standard and allowable limit:

Refer to AT-343, "Clutches and Brakes".

7. Check operation of high clutch. Refer to "DISASSEMBLY".

8. Install seal rings to input shaft assembly (high clutch drum).

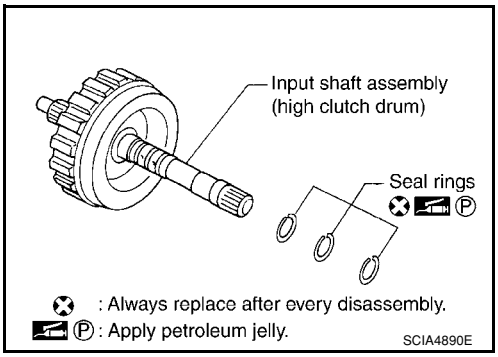

CAUTION:

Roll paper around seal rings to prevent seal rings from spreading.

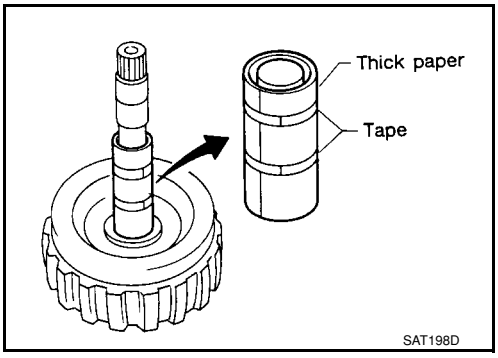

Forward and Overrun Clutches

INFOID:0000000001703385

COMPONENTS

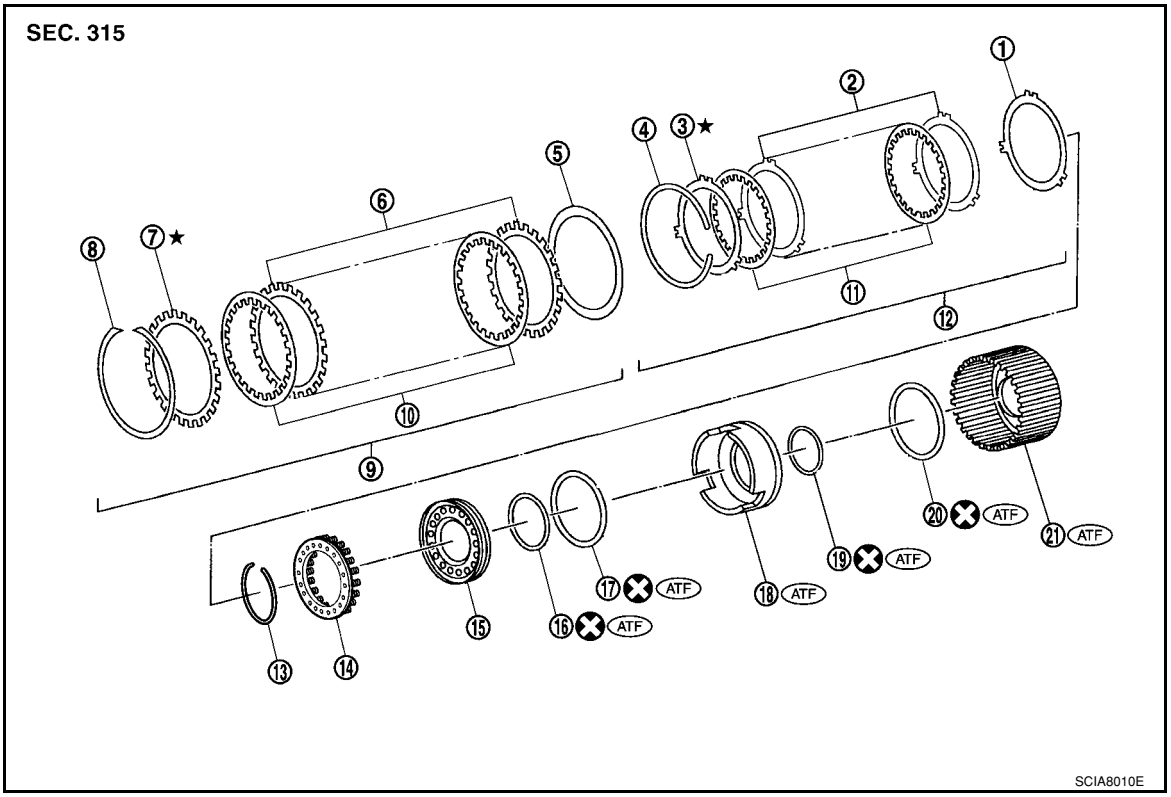

1. Dish plate	2. Driven plate	3. Retaining plate
4. Snap ring	5. Dish plate	6. Driven plate
7. Retaining plate	8. Snap ring	9. Forward clutch
10. Drive plate	11. Drive plate	12. Overrun clutch
13. Snap ring	14. Spring retainer assembly	15. Overrun clutch piston
16. D-ring	17. Seal lip	18. Forward clutch piston
19. D-ring	20. Seal lip	21. Forward clutch drum

Refer to Refer to Service Manual for symbol mark in the figure.

DISASSEMBLY

1. Check operation of forward clutch.

a. Install seal rings to bearing retainer, and set forward clutch drum.

b. Apply compressed air into oil hole of bearing retainer at the location as shown in the figure.

c. Check to see that retaining plate moves to snap ring.

d. If retaining plate does not contact snap ring:
   - D-ring might be damaged.
   - Seal lip might be damaged.
   - Fluid might be leaking past piston check ball.

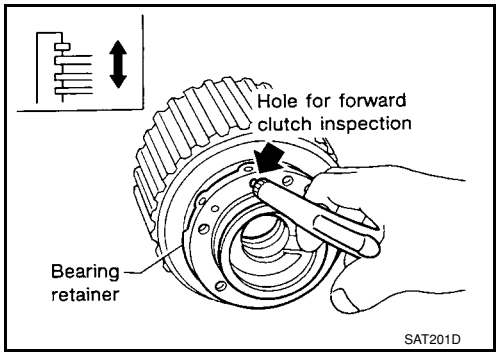

2. Check operation of overrun clutch.

a. Install seal rings to bearing retainer, and set forward clutch drum.

b. Apply compressed air into oil hole of bearing retainer at the location as shown in the figure.
c. Check to see that retaining plate moves to snap ring.
d. If retaining plate does not contact snap ring:
   - D-ring might be damaged.
   - Seal lip might be damaged.
   - Fluid might be leaking past piston check ball.

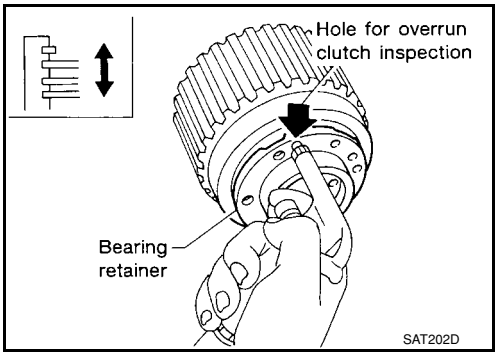

3. Remove snap ring for forward clutch from forward clutch drum using a flat-bladed screwdriver.
4. Remove retaining plate, drive plates, driven plates and dish plate for forward clutch.

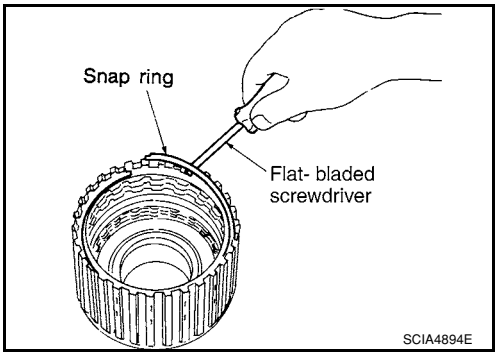

5. Remove snap ring for overrun clutch from forward clutch drum using a flat-bladed screwdriver.
6. Remove retaining plate, drive plates, driven plates and dish plate for overrun clutch.

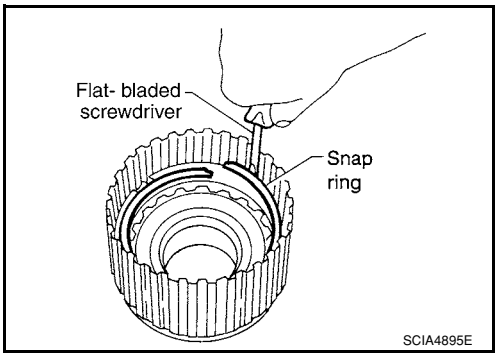

7. Set Tool A on spring retainer assembly, and remove snap ring (1) from forward clutch drum while compressing spring retainer assembly.

   Tool number: KV31103200 (J-39186)

   CAUTION:
   - **Set SST directly over return springs.**
   - **Do not expand snap ring excessively.**
8. Remove spring retainer assembly from forward clutch drum.
   CAUTION:
   Do not remove return springs from spring retainer.

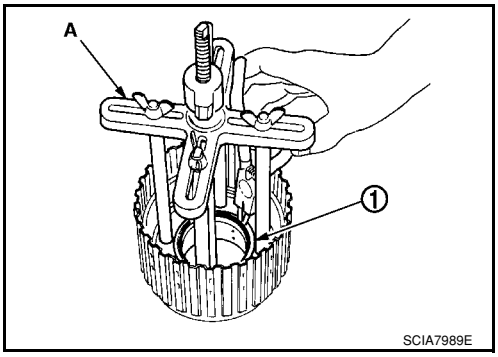

9. Install seal rings to bearing retainer (1), and set forward clutch drum. Then apply compressed air into the oil hole at the location as shown in the figure to remove overrun clutch piston from forward clutch piston.
   CAUTION:
   Do not blow air in too quickly, or overrun clutch piston and ATF could jump out. Carefully blow air little by little while protecting with lint-free cloth.

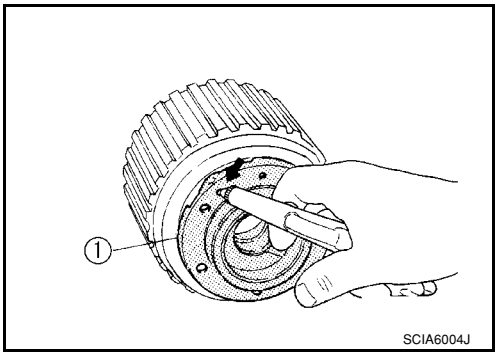

10. Install seal rings to bearing retainer (1), and set forward clutch drum. Then apply compressed air into the oil hole at the location as shown in the figure to remove forward clutch piston from forward clutch drum.
    CAUTION:
    Do not blow air in too quickly, or forward clutch piston and ATF could jump out. Carefully blow air little by little while protecting with lint-free cloth.

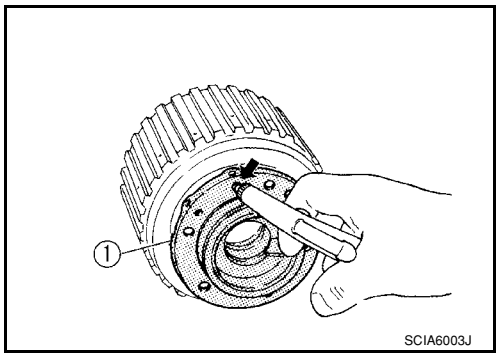

11. Remove seal lips (1) and D-rings (2) from forward clutch piston (3) and overrun clutch piston (4).

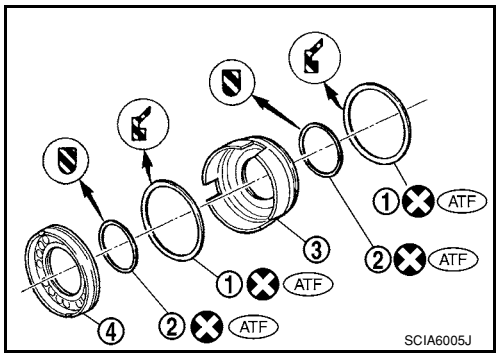

INSPECTION

Forward Clutch and Overrun Clutch Snap Rings
Check for deformation, fatigue or damage. Replace if necessary.

Forward Clutch and Overrun Clutch Drive Plates
- Check facing for burns, cracks or damage. Replace if necessary.
- Measure thickness of facing.

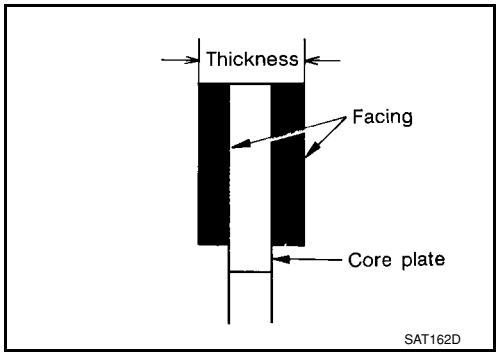

Thickness of drive plate

Forward clutch

Standard and allowable limit:

Refer to AT-343, "Clutches and Brakes".

Overrun clutch

Standard and allowable limit:

Refer to AT-343, "Clutches and Brakes".

CAUTION:
- **Measure the thickness at 3 locations and find the average.**
- **Inspect all drive plates.**
- **Replace if the thickness is below the allowable limit.**

Forward Clutch and Overrun Clutch Dish Plates
- Check for deformation or damage.
- Measure thickness (t) of dish plate. Replace if damaged, deformed or worn.

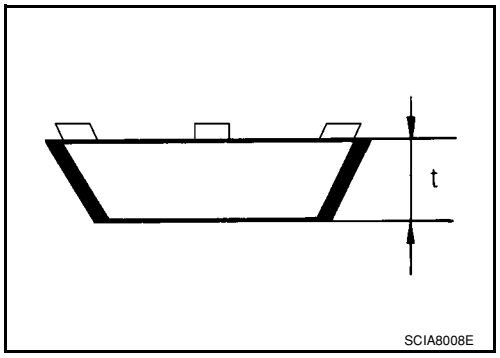

Thickness of dish plate (t)

Forward clutch:	**2.5 mm (0.098 in)**
Overrun clutch:	**2.15 mm (0.0846 in)**

Forward Clutch and Overrun Clutch Spring Retainer Assembly

Check length (L) of spring retainer assembly. Replace if damaged, deformed or worn.

Length (L): 27.7 mm (0.1091 in)

CAUTION:
Do not remove return springs (A) from spring retainer (B)

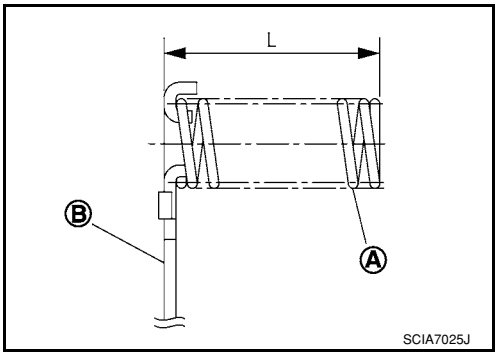

Forward Clutch Drum

- Make sure that check balls are not fixed.
- Apply compressed air to check ball oil hole from outside of forward clutch drum. Make sure air leaks past ball.
- Apply compressed air to oil hole from inside of forward clutch drum. Make sure there is no air leakage.

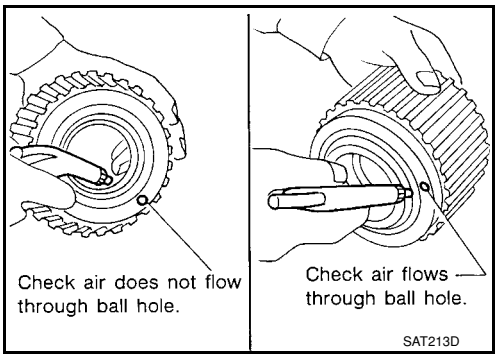

Overrun Clutch Piston

- Make sure that check balls are not fixed.
- Apply compressed air to check ball oil hole opposite return spring. Make sure there is no air leakage.
- Apply compressed air to oil hole on return spring side. Make sure that air leaks through ball hole.

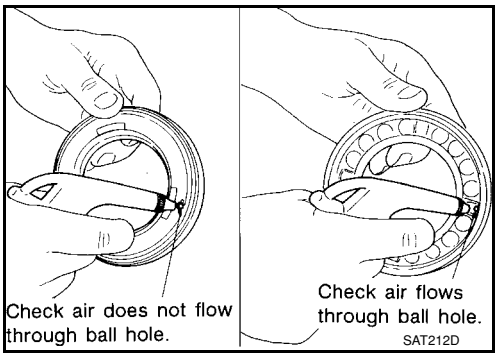

ASSEMBLY

1. Install seal lips (1) and D-rings (2) on forward clutch piston (3) and overrun clutch piston (4).
   CAUTION:
   Be careful with the direction of seal lips (1).

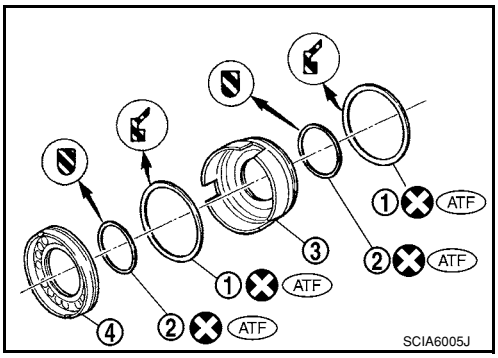

2. Install overrun clutch piston on forward clutch piston by turning it slowly.
CAUTION:
Apply ATF to inner surface of forward clutch piston.

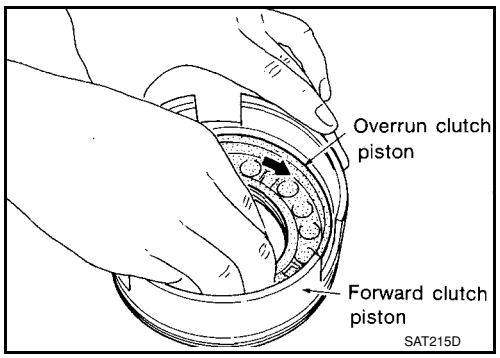

3. Install forward clutch piston with overrun clutch piston on forward clutch drum by turning it slowly.
CAUTION:
Apply ATF to inner surface of forward clutch drum.

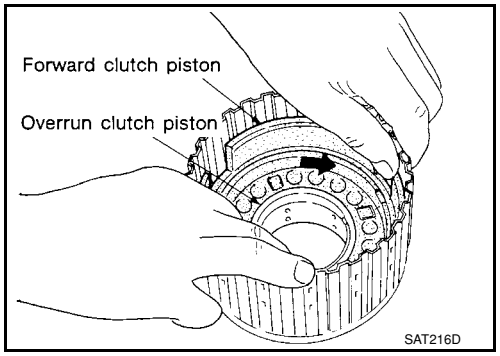

4. Align notch in forward clutch piston with groove in forward clutch drum.

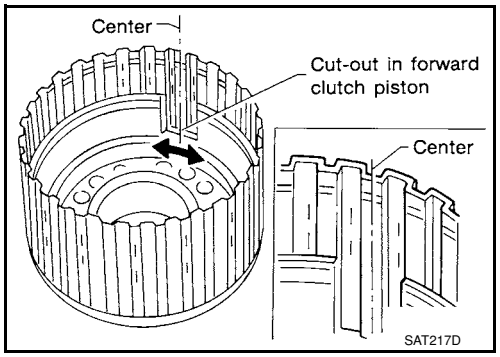

5. Install spring retainer assembly (1) on overrun clutch piston (2).

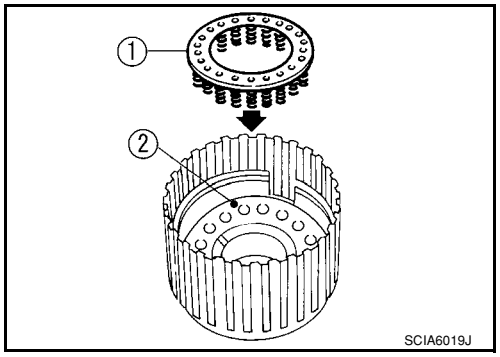

6. Set Tool A on spring retainer assembly, and install snap ring (1) while compressing spring retainer assembly.

Tool number: KV31103200 (J-39186)

CAUTION:
- **Set SST directly over return springs.**
- **Do not expand snap ring excessively.**

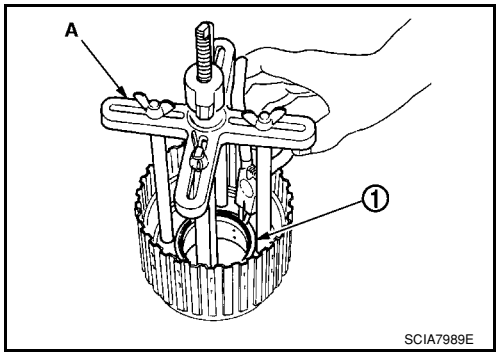

- **Do not align snap ring gap with spring retainer assembly stopper.**

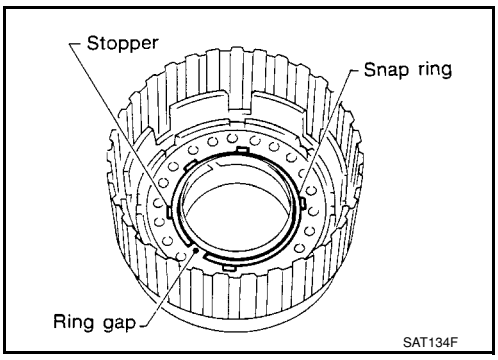

7. Install dish plate, driven plates, drive plates and retaining plate for overrun clutch.
   (1): Snap ring
   (2): Retaining plate
   (3): Drive plate
   (4): Driven plate
   (5): Dish plate
   Drive plate/Driven plate: 3/4
   CAUTION:
   Be careful with the order of plates.

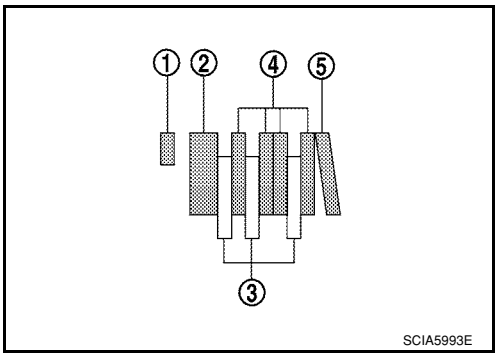

8. Install snap ring for overrun clutch using a flat-bladed screwdriver.

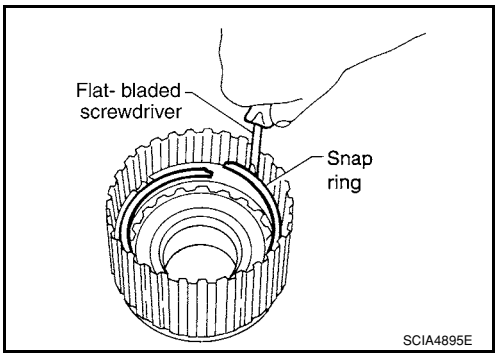

9. Measure clearance between overrun clutch retaining plate and snap ring using feeler gauge. If not within allowable limit, select proper retaining plate. Refer to “Parts Information” for retaining plate selection.

   Specified clearance

   Standard and allowable limit:

   Refer to AT-343, "Clutches and Brakes".

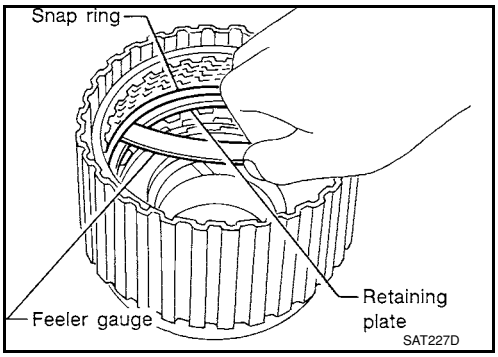

10. Install dish plate, driven plates, drive plates and retaining plate for forward clutch.
    (1): Snap ring
    (2): Retaining plate
    (3): Drive plate
    (4): Driven plate
    (5): Dish plate
    Drive plate/Driven plate: 5/5
    CAUTION:
    Be careful with the order of plates.

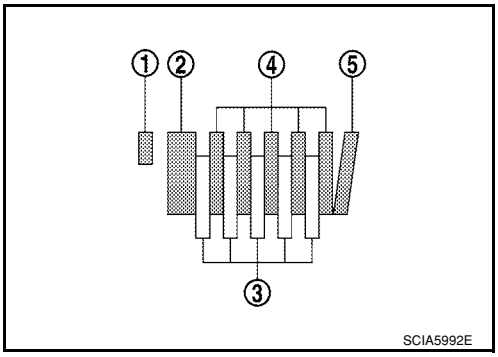

11. Install snap ring for forward clutch using a flat-bladed screwdriver.

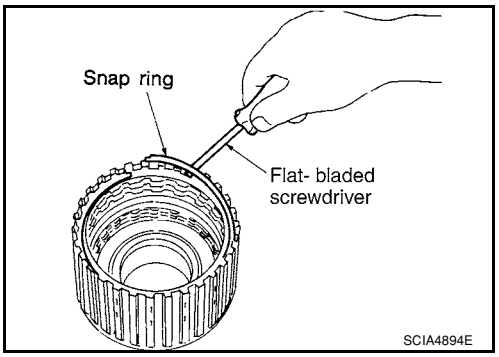

12. Measure clearance between forward clutch retaining plate and snap ring using feeler gauge. If not within allowable limit, select proper retaining plate. Refer to “Parts Information” for retaining plate selection.

Specified clearance

Standard and allowable limit:

Refer to AT-343, "Clutches and Brakes".

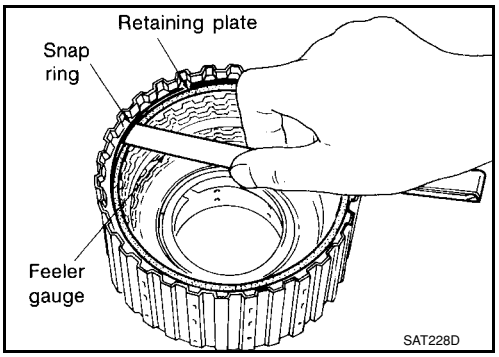

13. Check operation of forward clutch and overrun clutch. Refer to "DISASSEMBLY".

Low & Reverse Brake

INFOID:0000000001703386

COMPONENTS

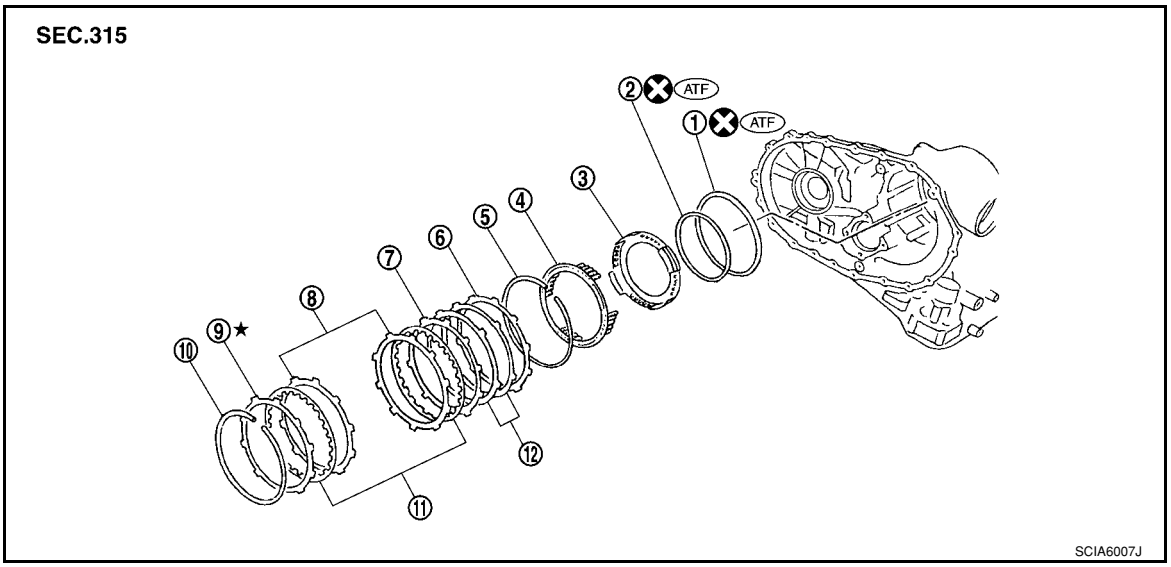

1. Seal lip	2. D-ring	3. Low & reverse brake piston
4. Spring retainer assembly	5. Snap ring	6. Driven plate
7. Retaining plate	8. Driven plate	9. Retaining plate
10. Snap ring	11. Drive plate	12. Dish plate

Refer to GI section to make sure icons (symbol marks) in the figure. Refer to GI-8, "Component".

DISASSEMBLY

1. Check operation of low & reverse brake.

a. Apply compressed air into oil hole of transaxle case at the location as shown in the figure.
b. Check to see that retaining plate moves to snap ring.
c. If retaining plate does not contact snap ring:
   - D-ring might be damaged.
   - Seal lip might be damaged.

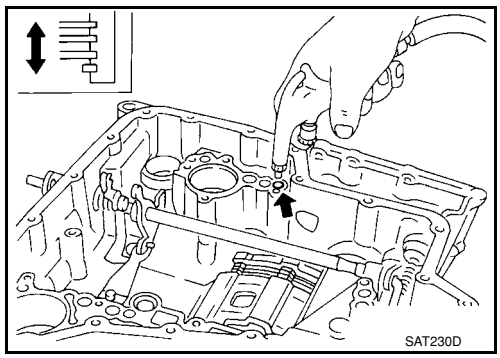

2. Remove snap ring (1) using a flat-bladed screwdriver A.
3. Remove retaining plates, drive plates, driven plates, dish plates.

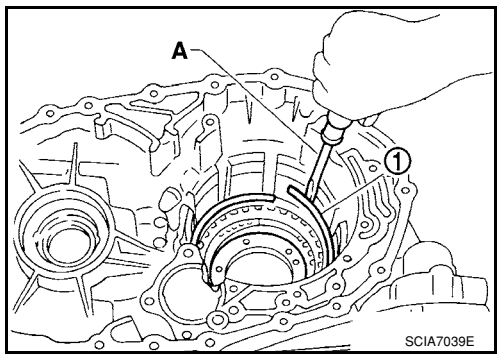

4. Set Tool A on spring retainer assembly, and remove snap ring from transaxle case while compressing spring retainer assembly.

   Tool number: KV31103200 (J-39186)

   CAUTION:
   Set SST directly over return springs.
5. Remove spring retainer assembly from transaxle case.
   CAUTION:
   Do not remove return springs from spring retainer.

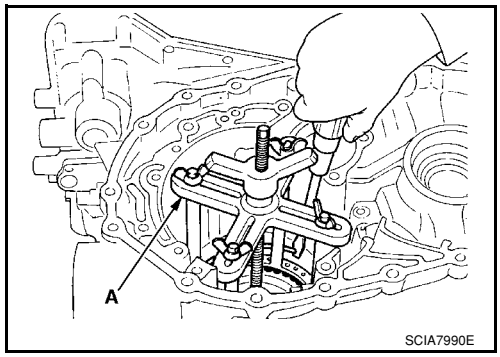

6. Apply compressed air into the oil hole on transaxle case as shown in the figure to raise piston while strongly pressing the whole low & reverse brake piston by hand. When applying compressed air, strongly press the whole piston and adjust the pressure so that it is raised evenly. Portion (A) (low & reverse brake pressure) especially tends to tilt.
   CAUTION:
   Apply air gradually and allow low & reverse brake piston to come out evenly.
7. Remove low & reverse brake piston from transaxle case by turning it.
8. Inspect transaxle case. Replace if damaged or worn.

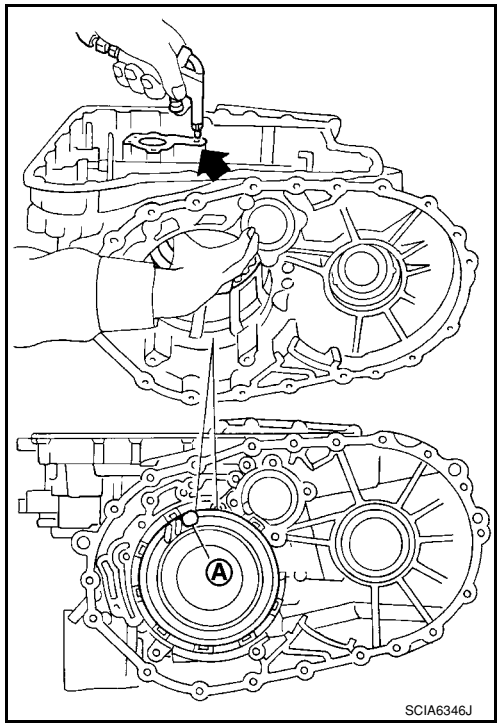

9. Remove seal lip (1) and D-ring (2) from low & reverse brake piston (3).

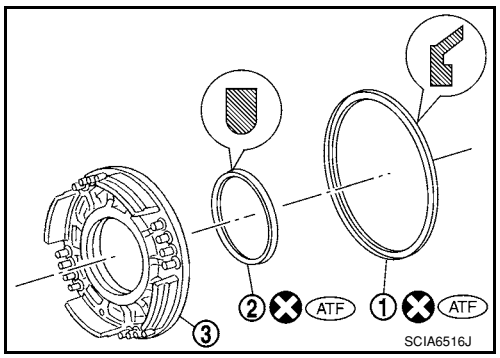

INSPECTION

Low & Reverse Brake Snap Rings

Check for deformation, fatigue or damage. Replace if necessary.

Low & Reverse Brake Drive Plates

- Check facing for burns, cracks or damage. Replace if necessary.
- Measure thickness of facing.

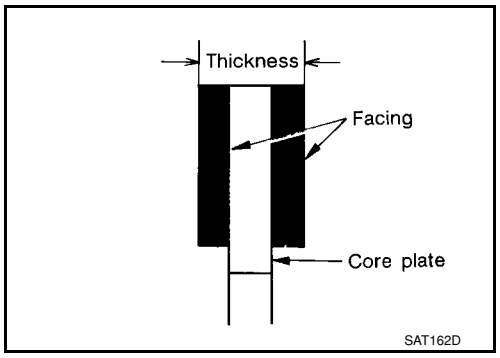

Thickness of drive plate

Standard and allowable limit:

Refer to AT-343, "Clutches and Brakes".

CAUTION:

- **Measure the thickness at 3 locations and find the average.**
- **Inspect all drive plates.**
- **Replace if the thickness is below the allowable limit.**

Low & Reverse Brake Dish Plates

- Check for deformation or damage.
- Measure thickness (t) of dish plate. Replace if damaged, deformed or worn.

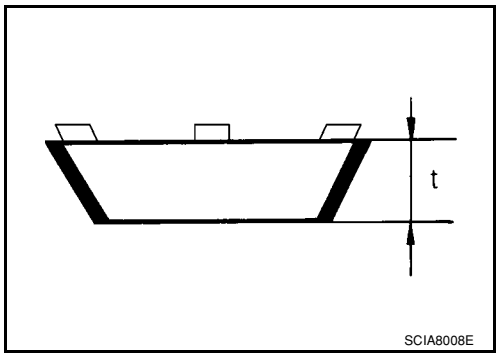

Thickness of dish plate (t): 2.93 mm (0.1154 in)

Low & Reverse Brake Spring Retainer Assembly

Check length (L) of spring retainer assembly. Replace if damaged, deformed or worn.

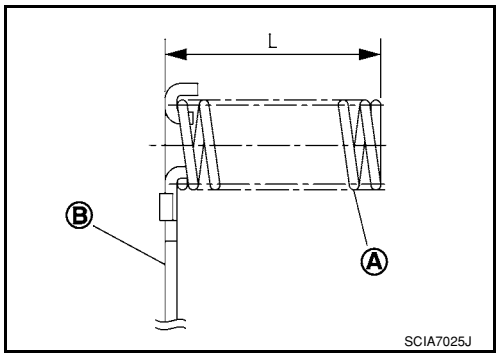

Length (L): 26.3 mm (1.035 in)

CAUTION:

Do not remove return springs (A) from spring retainer (B)

ASSEMBLY

1. Install seal lip (1) and D-ring (2) on low & reverse brake piston (3).

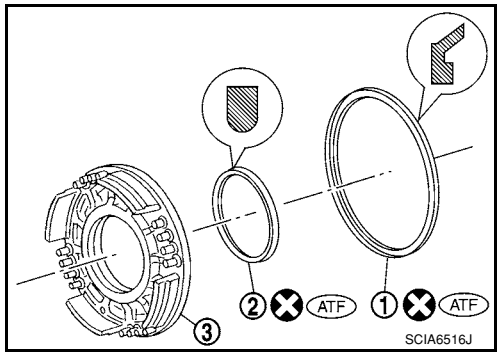

2. Install low & reverse brake piston in transaxle case while turning it.
   CAUTION:
   Apply ATF to inner surface of transaxle case.

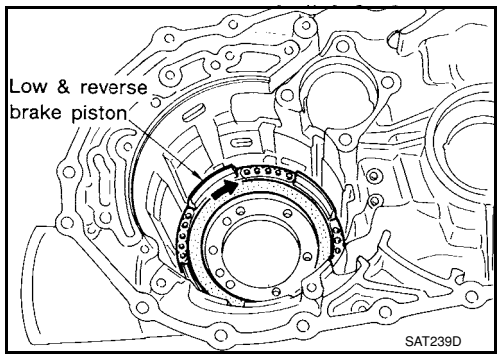

3. Install spring retainer assembly (1) on low & reverse brake piston (2).

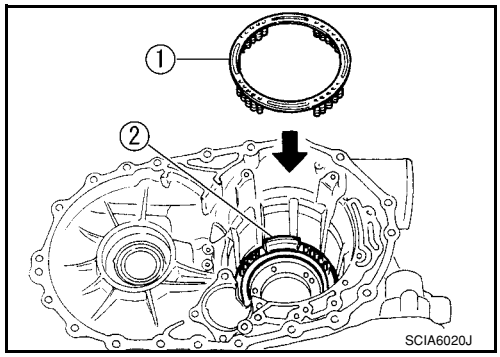

4. Set Tool A on spring retainer assembly, and install snap ring while compressing spring retainer assembly.

   Tool number: KV31103200 (J-39186)

   CAUTION:
   Set SST directly over return springs.

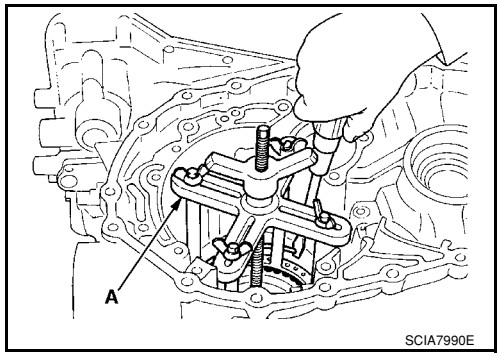

5. Install driven plates, dish plates, retaining plates and drive plates.
   (1): Snap ring
   (2): Retaining plate
   (3): Drive plate
   (4): Driven plate
   (5): Retaining plate
   (6): Dish plate
   Drive plate/Driven plate: 5/5
   CAUTION:
   Be careful with the order of plates

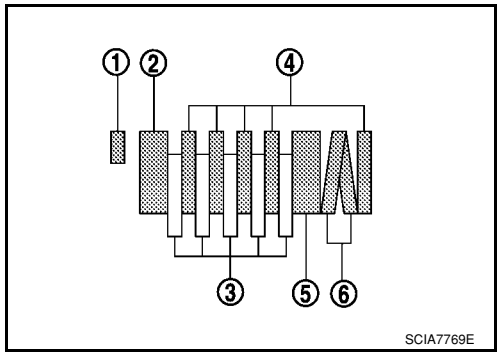

NOTE:
Install two dish plates fitting each installation direction with groove displaced slightly.

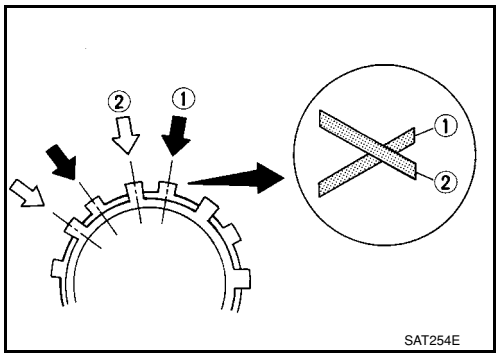

6. Install snap ring (1) using a flat-bladed screwdriver A.

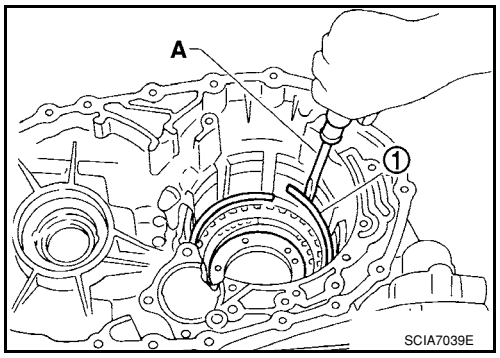

7. Measure clearance between retaining plate and snap ring. If not within allowable limit, select proper retaining plate (front side). Refer to “Parts Information” for retaining plate selection.

Specified clearance

Standard and allowable limit:

Refer to AT-343, "Clutches and Brakes".

8. Check operation of low & reverse brake. Refer to "DISASSEMBLY".

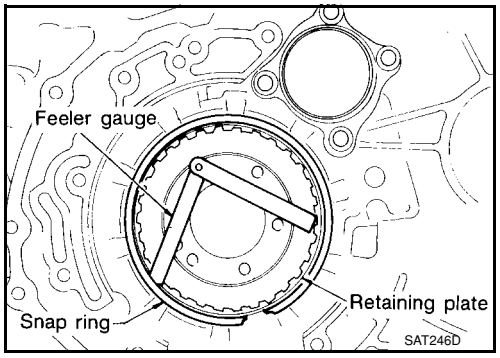

Rear Internal Gear and Forward Clutch Hub

INFOID:0000000001703387

COMPONENTS

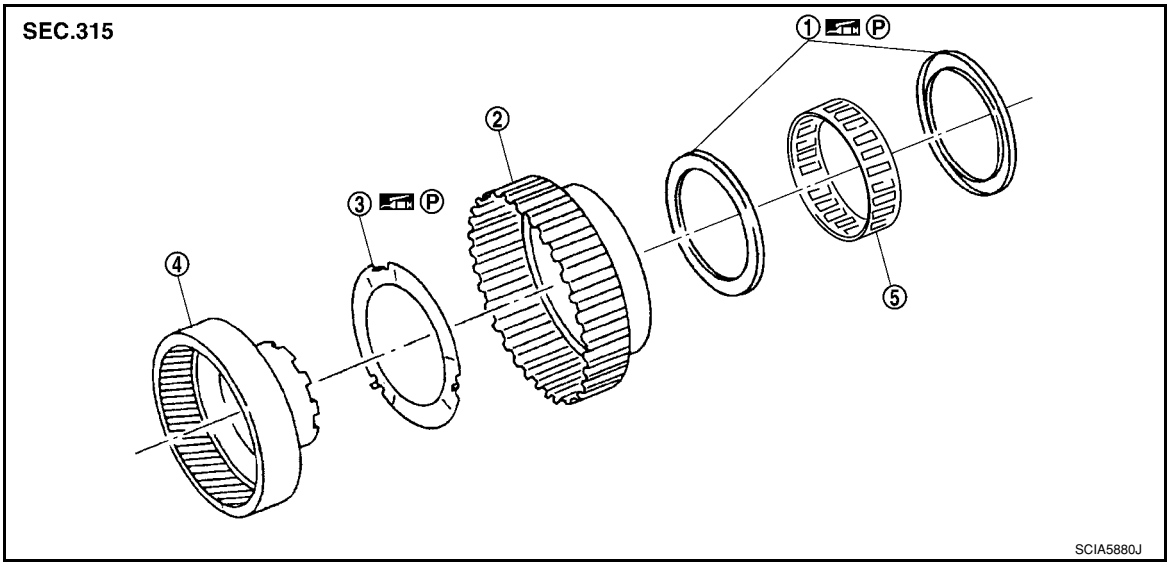

1. End bearing
2. Forward clutch hub
3. Thrust washer
4. Rear internal gear
5. Forward one-way clutch

Refer to GI section to make sure icons (symbol marks) in the figure. Refer to GI-8, "Component".

DISASSEMBLY

1. Remove forward clutch hub from rear internal gear.

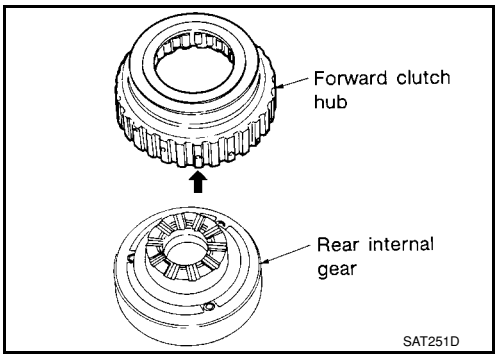

2. Remove end bearing (1) from rear internal gear (2).

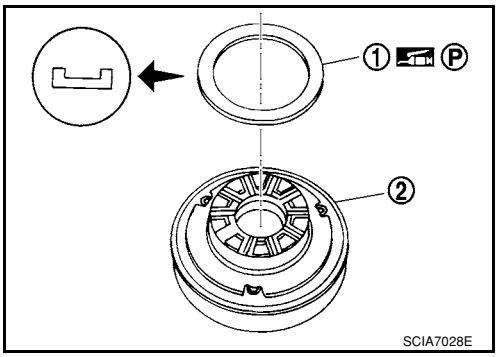

3. Remove thrust washer from rear internal gear.

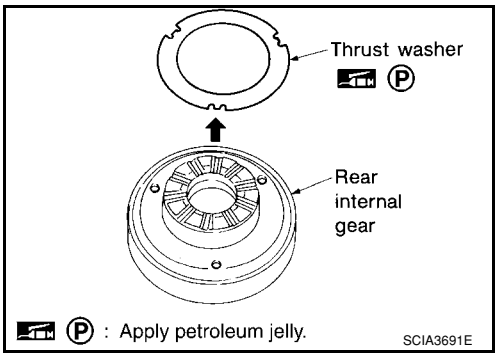

4. Remove end bearing (2) from forward one-way clutch (3).
   (1): Forward clutch hub

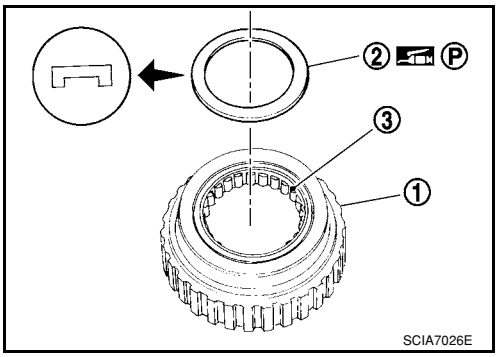

5. Remove forward one-way clutch from forward clutch hub.

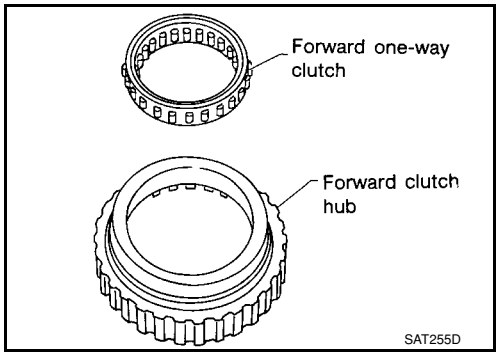

INSPECTION

Rear Internal Gear and Forward Clutch Hub

Check rubbing surfaces for wear or damage. Replace if necessary.
(1): Rear internal gear
(2): Forward clutch hub

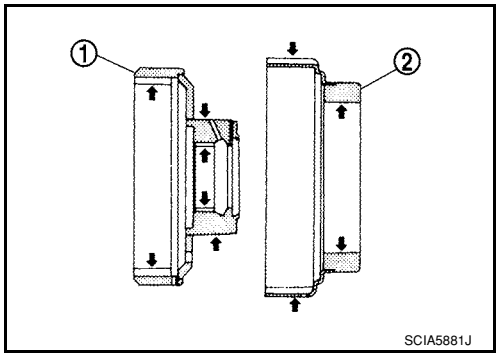

End Bearings and Forward One-way Clutch

- Check end bearings (1) for deformation and damage. Replace if necessary.
- Check forward one-way clutch (2) for wear and damage. Replace if necessary.

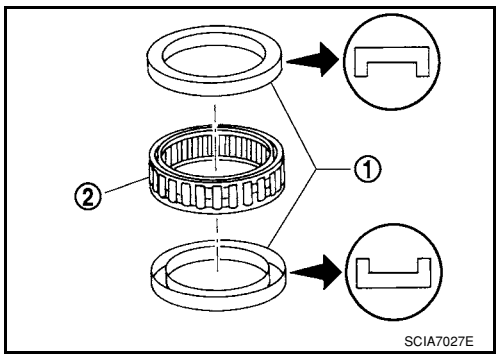

ASSEMBLY

1. Install forward one-way clutch on forward clutch hub.
   CAUTION:
   Be careful with the direction of forward one-way clutch.

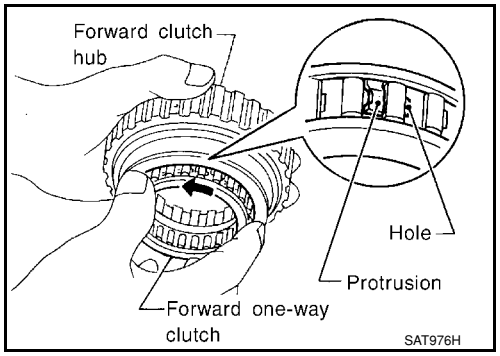

2. Install end bearing (2) on forward one-way clutch (3).
   (1): Forward clutch hub

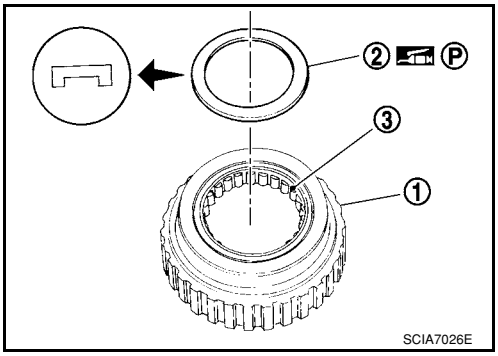

3. Install thrust washer on rear internal gear.
   CAUTION:
   Align pawls of thrust washer with holes of rear internal gear.

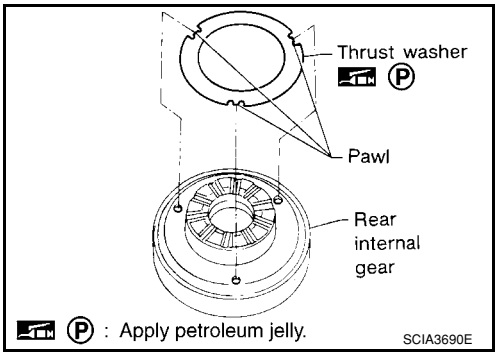

4. Install end bearing (1) on rear internal gear (2).

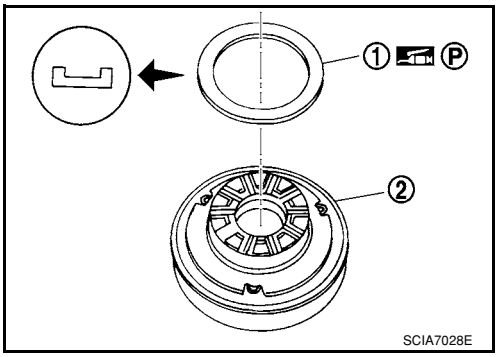

5. Install forward clutch hub on rear internal gear.
   CAUTION:
   - **Check operation of forward one-way clutch.**
     Hold rear internal gear and turn forward clutch hub.
     Check forward clutch hub for correct locking and unlocking directions.
   - **If not as shown in figure, check the installation direction of forward one-way clutch.**

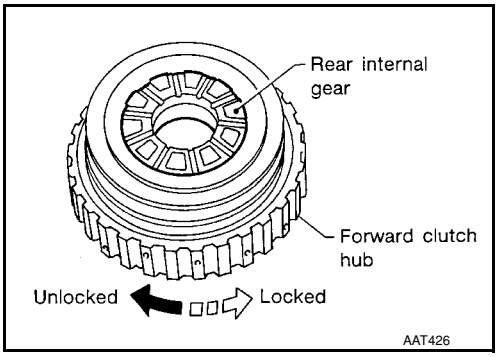

Output Shaft, Output Gear, Idler Gear, Reduction Pinion Gear and Bearing Retainer

INFOID:0000000001703388

COMPONENTS

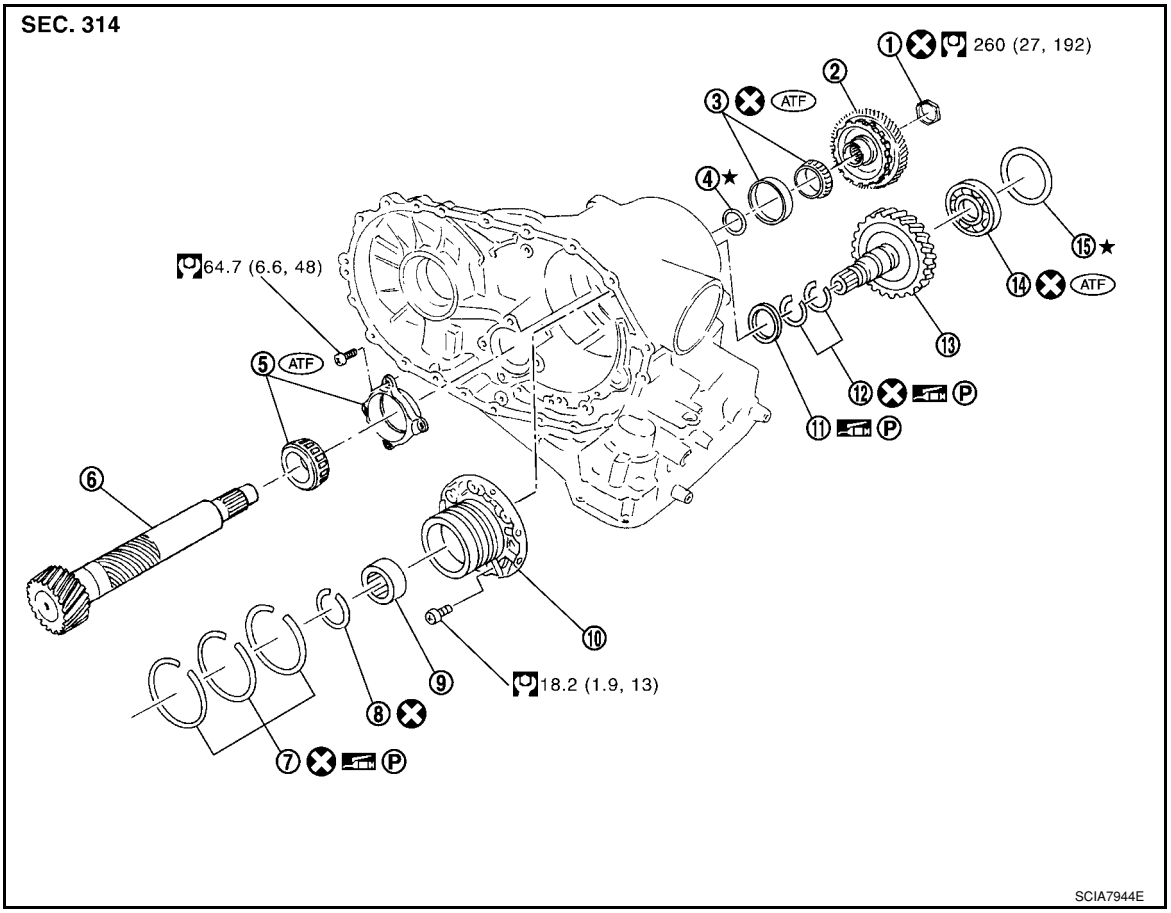

1.	Lock nut	2.	Idler gear	3.	Idler gear bearing
4.	Reduction pinion gear adjusting shim	5.	Reduction pinion gear bearing	6.	Reduction pinion gear
7.	Seal ring	8.	Snap ring	9.	Radial needle bearing
10.	Bearing retainer	11.	Thrust needle bearing	12.	Seal ring
13.	Output shaft	14.	Output shaft bearing	15.	Output shaft adjusting shim

Refer to GI section to make sure icons (symbol marks) in the figure. Refer to GI-8, "Component".

DISASSEMBLY

1. Remove seal rings (1) from output shaft (2) and bearing retainer (3).

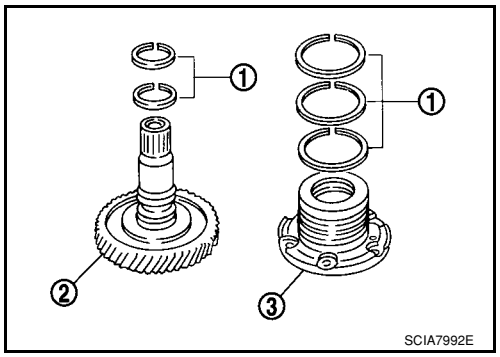

2. Remove output shaft bearing from output shaft with flat-bladed screwdrivers.
   CAUTION:
   - **Always replace bearing with a new one when removed**
   - **Do not damage output shaft.**

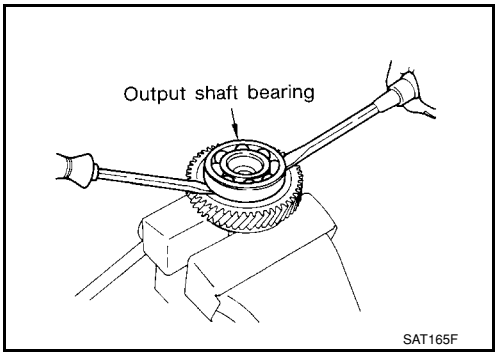

3. Remove snap ring from bearing retainer.

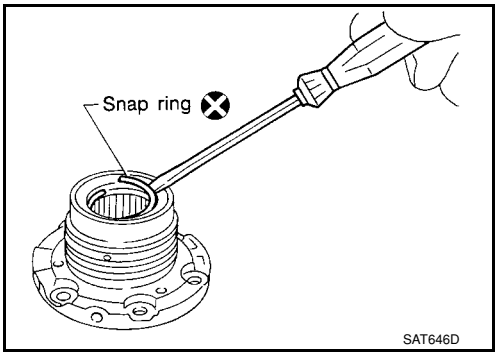

4. Remove radial needle bearing from bearing retainer (1).

   Tool number: KV381054S0 (J-34286)

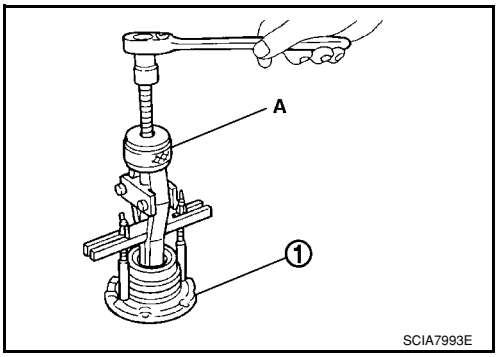

5. Insert a flat-bladed screwdriver A between the mating surfaces of idler gear (1) and idler gear bearing inner race (2), and enlarge the gap.
   CAUTION:
   Be careful not to damage idler gear (1).
6. Set a drift B [commercial service tool: 34 mm (1.34 in) dia.] on idler gear (1), and remove idler gear bearing inner race (2) using a puller C (commercial service tool).

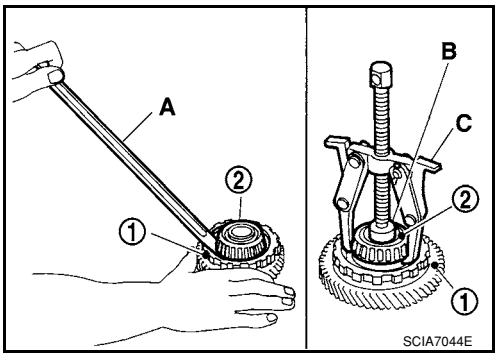

7. Remove idler gear bearing outer race from transaxle case.

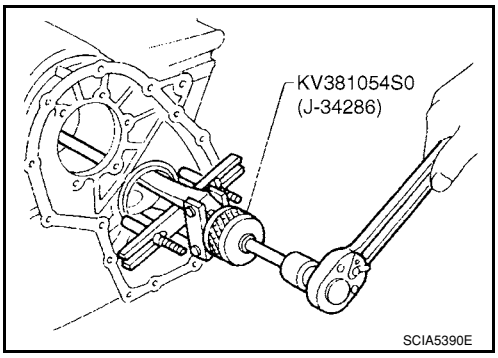

8. Set Tool A to reduction pinion gear bearing inner race, press out reduction pinion gear bearing inner race from reduc-tion pinion gear.

Tool number: ST30031000 (J-22912-01)

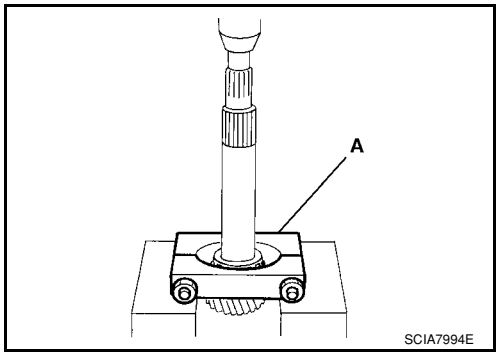

9. Remove reduction pinion gear bearing outer race from transaxle case.

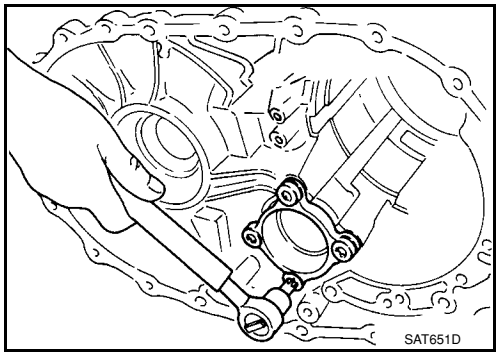

INSPECTION

Output Shaft, Idler Gear and Reduction Pinion Gear

Check for wear, damage or crack. Replace if necessary.

Bearings

- Make sure bearings roll freely and are free from noise, cracks, pit-ting or wear. Replace if necessary.

CAUTION:

When replacing taper roller bearing, replace outer and inner race as a set.

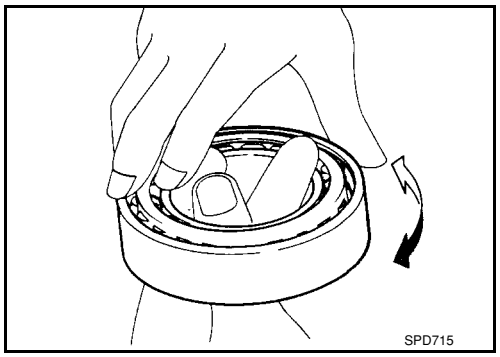

Seal Ring Clearance

- Install new seal rings to output shaft.
- Measure clearance between seal ring and ring groove of output shaft.

Standard clearance and allowable limit:

Refer to AT-346, "Output Shaft".

- If not within allowable limit, replace output shaft.
- Install new seal rings to bearing retainer.
- Measure clearance between seal ring and ring groove of bearing retainer.

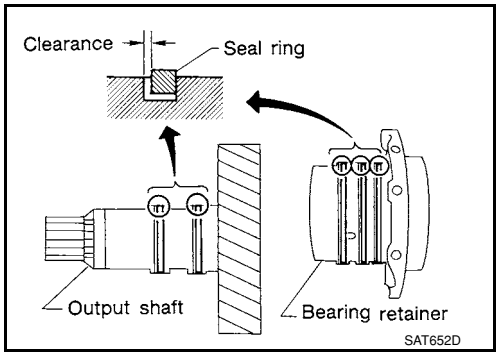

Standard clearance and allowable limit:

Refer to AT-346, "Bearing Retainer".

- If not within allowable limit, replace bearing retainer.

ASSEMBLY

1. Set Tool A on reduction pinion gear bearing inner race, and press reduction pinion gear to reduction pinion gear bearing inner race.

   Tool number: ST35272000 (J-26092)

   CAUTION:
   Apply ATF to reduction pinion gear bearing inner race.

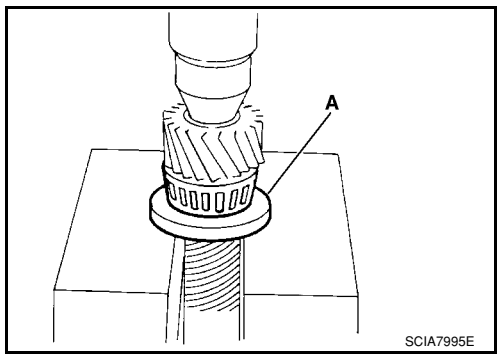

2. Install reduction pinion gear bearing outer race on transaxle case. Refer to "COMPONENTS" .
   - **Check reduction pinion gear bearing preload. Refer to AT-319, "Adjustment (1)"**

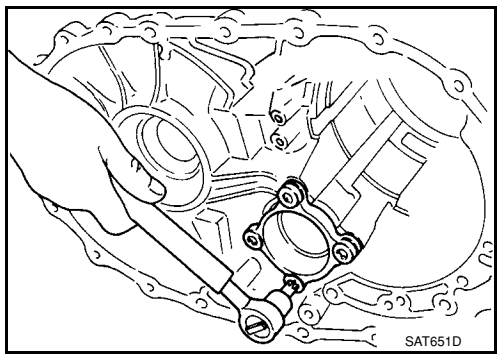

3. Set Tool A and a suitable drift B on idler gear bearing inner race (1), and press idler gear bearing inner race (1) to idler gear (2).

   Tool number: ST35272000 (J-26092)

   CAUTION:
   - **Do not reuse idler gear bearing.**
   - **Apply ATF to idler gear bearing.**

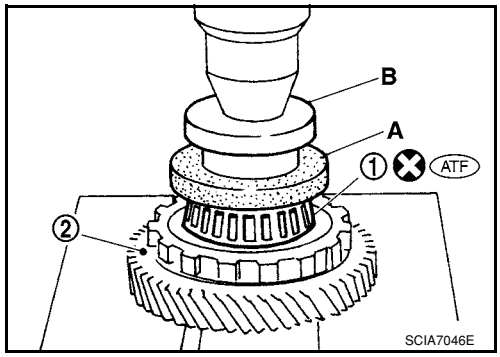

4. Set Tool A on idler gear bearing outer race, and drive idler gear bearing outer race into transaxle case.

   Tool number: ST37830000 (—)

   CAUTION:
   - **Do not reuse idler gear bearing.**
   - **Apply ATF to idler gear bearing.**

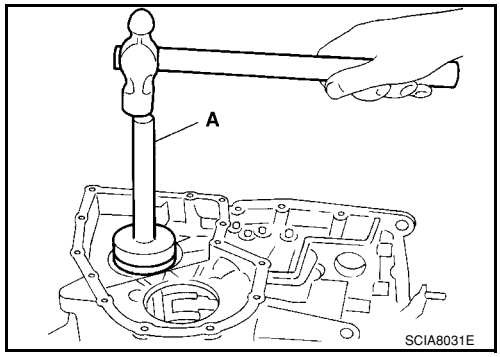

5. Press output shaft bearing on output shaft.
   CAUTION:
   - **Do not reuse output shaft bearing.**
   - **Apply ATF to output shaft bearing.**

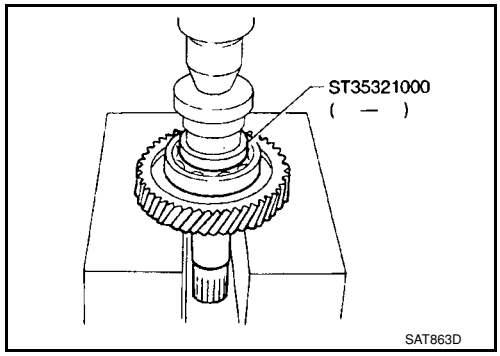

6. Set drift [commercial service tool] on radial needle bearing, and press radial needle bearing into bearing retainer.

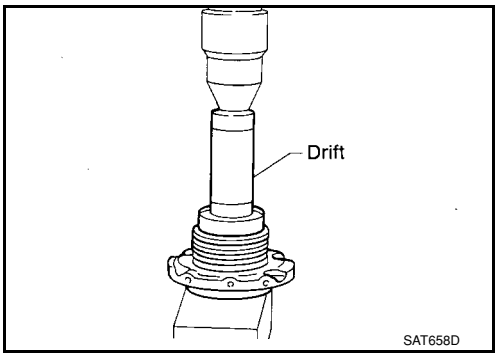

7. Install snap ring to bearing retainer.

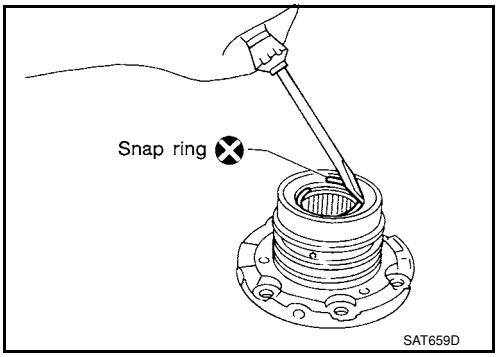

8. After packing ring grooves with petroleum jelly, carefully install new seal rings (1) on output shaft (2) and bearing retainer (3).

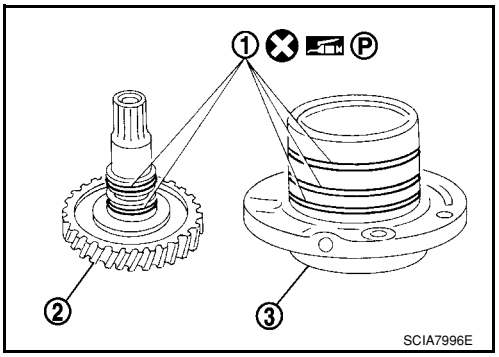

CAUTION:
Roll paper around seal rings to prevent seal rings from spreading.

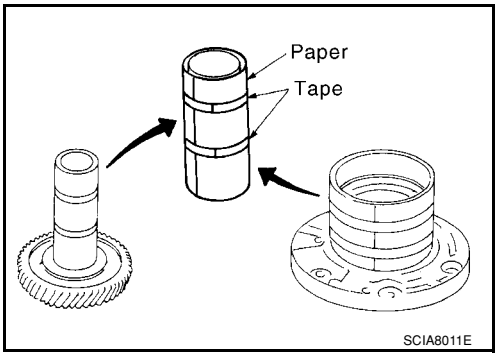

Band Servo Piston Assembly

INFOID:0000000001703389

COMPONENTS

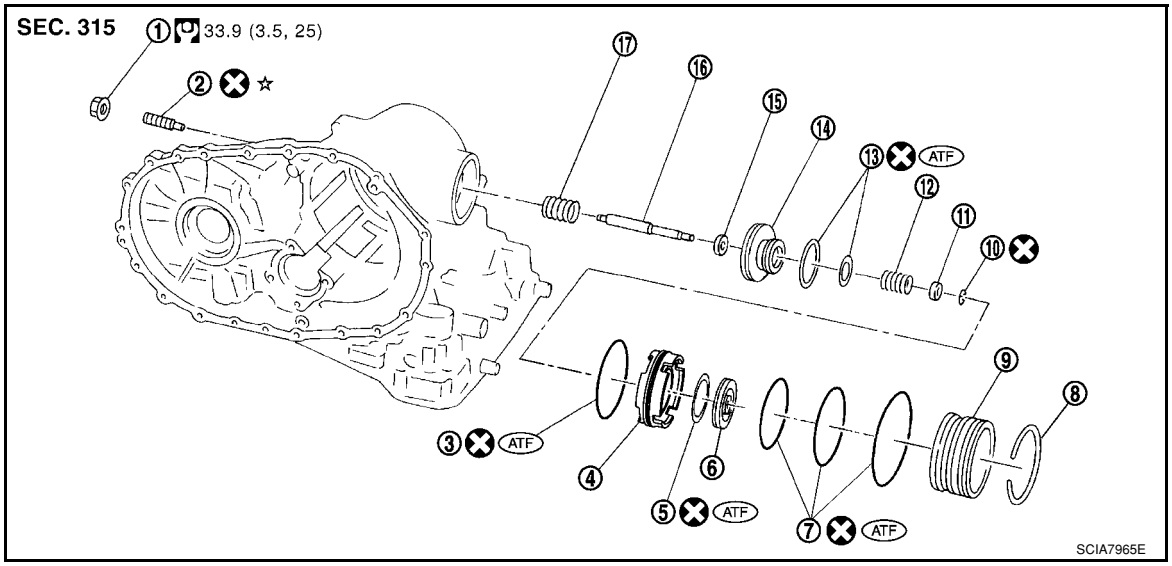

1. Lock nut	2. Anchor end pin	3. O-ring
4. Servo piston retainer	5. D-ring	6. OD servo piston
7. O-ring	8. Snap ring	9. OD servo piston retainer
10. E-ring	11. Spring retainer	12. OD servo return spring
13. D-ring	14. Band servo piston	15. Band servo thrust washer
16. Band servo piston stem	17. 2nd servo return spring	

Refer to GI section to make sure icons (symbol marks) in the figure. Refer to GI-8, "Component".

DISASSEMBLY

1. Push in OD servo piston assembly using a puller A (commercial service tool) and a suitable drift B, and then remove snap ring (1) from transaxle case using a flat-bladed screwdriver C.

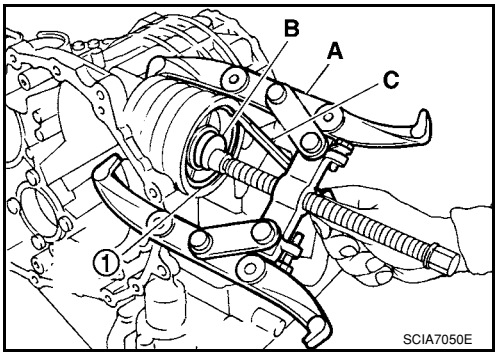

2. Apply compressed air into the oil hole as shown in the figure to remove OD servo piston assembly and band servo piston assembly.
   CAUTION:
   Do not blow air in too quickly, or OD servo piston assembly, band servo piston assembly and ATF could jump out. Carefully blow air little by little while protecting with lint-free cloth A.
3. Remove 2nd servo return spring from transaxle case.

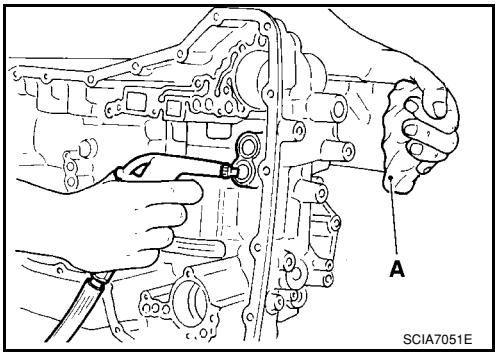

4. Wrap OD servo piston retainer (1) using lint-free cloth A, and then apply compressed air into the band servo piston stem hole on OD servo piston (2) to remove OD servo piston (2) from OD servo piston retainer (1).
CAUTION:
Do not blow air in too quickly, or OD servo piston (2) and ATF could jump out. Carefully blow air little by little while protecting with lint-free cloth A.

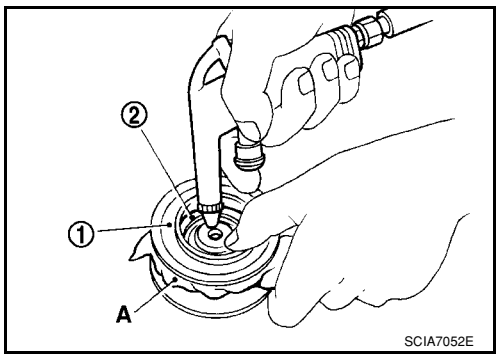

5. Remove D-ring (1) from OD servo piston (2).

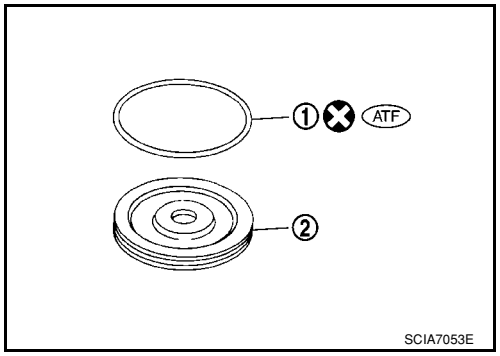

6. Remove O-rings and from OD servo piston retainer.
(1): O-ring (small diameter)
(2): O-ring (medium diameter)
(3): O-ring (large diameter)
(4): OD servo piston retainer

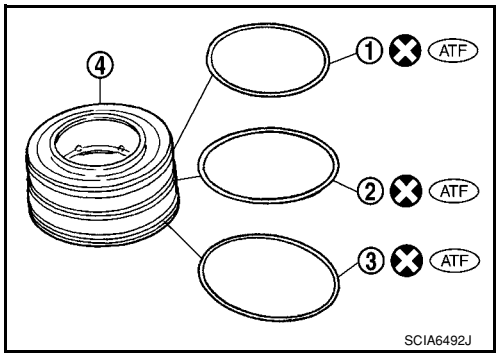

7. Remove band servo piston assembly (1) from servo piston retainer (2).

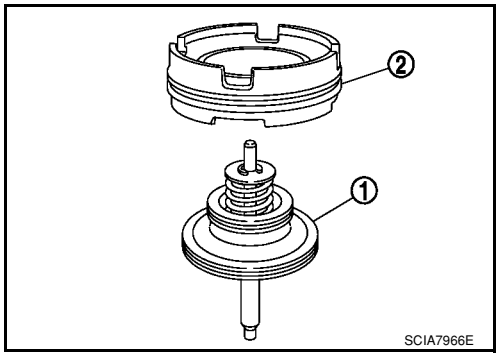

8. Place band servo piston stem on a wooden block, and remove E-ring from band servo piston stem using a flat-bladed screw-driver while pressing spring retainer downward.

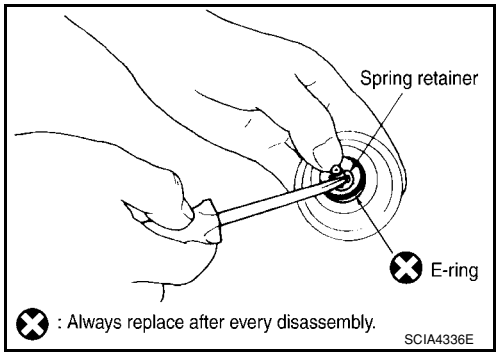

9. Remove spring retainer (1), OD servo return spring (2), band servo piston (3) and band servo thrust washer (4) from band servo piston stem (5).

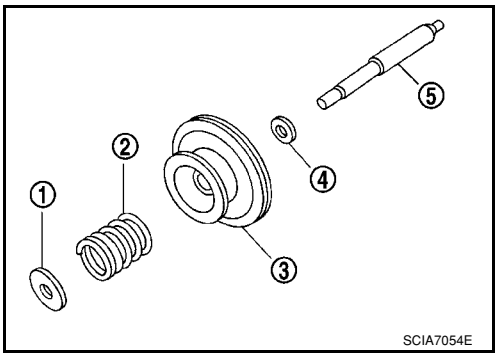

10. Remove O-ring (1) from servo piston retainer (2).

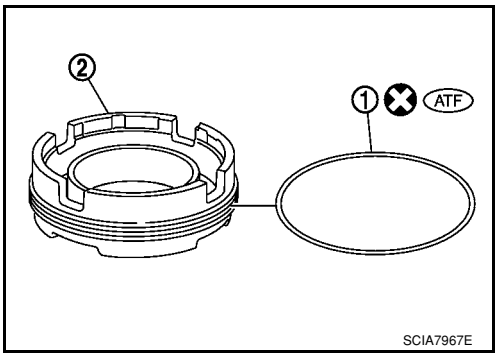

11. Remove D-rings from band servo piston.

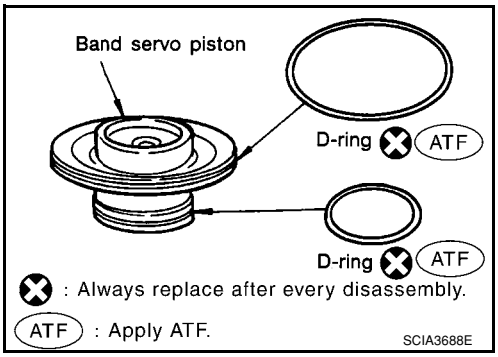

INSPECTION

Pistons, Retainers and Piston Stem

Check the sliding surfaces for damage or excessive wear. Replace if necessary.

Return Springs

- Check each return spring for damage or deformation. Also measure free length. Refer to AT-345, "Band Servo".
- Replace springs if deformed or fatigued.

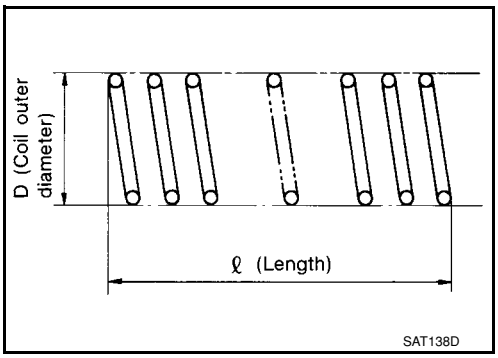

ASSEMBLY

1. Install D-rings to band servo piston.

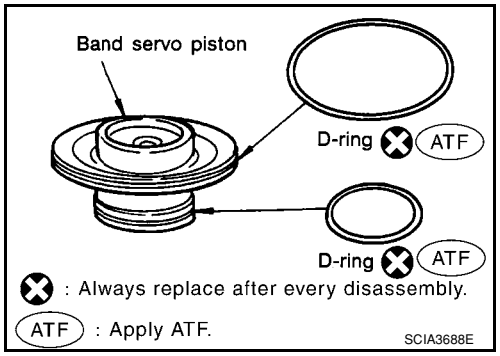

2. Install band servo thrust washer (4), band servo piston (3), OD servo return spring (2) and spring retainer (1) to band servo piston stem (5).

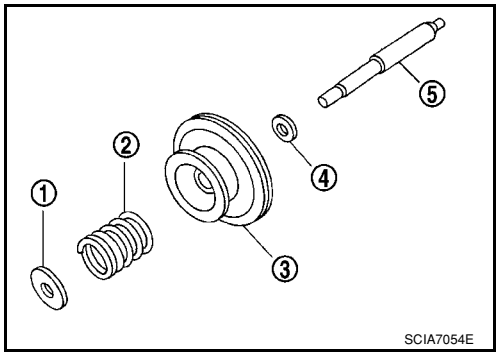

3. Place band servo piston stem (1) on a wooden block, and install E-ring (2) to band servo piston stem (1) while pressing spring retainer (3) downward.

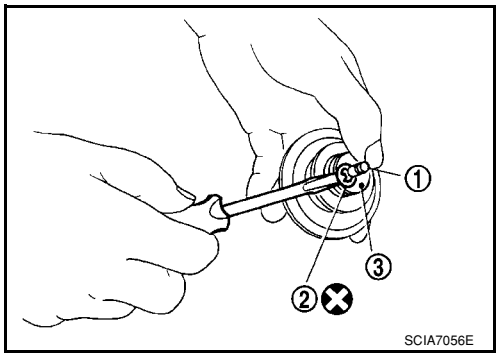

4. Install O-ring (1) to servo piston retainer (2).

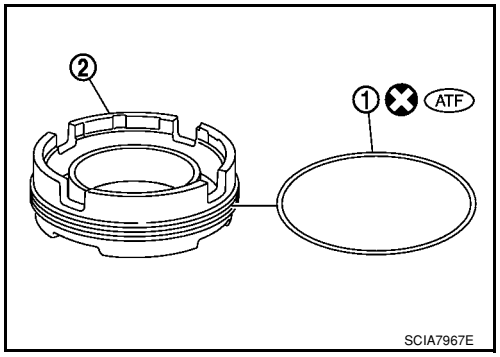

5. Install band servo piston assembly (1) to servo piston retainer (2) by pushing it inward.

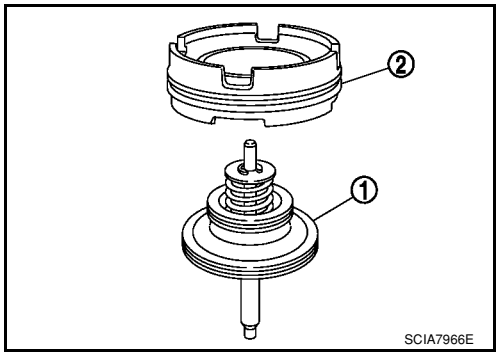

6. Install D-ring (1) to OD servo piston (2).

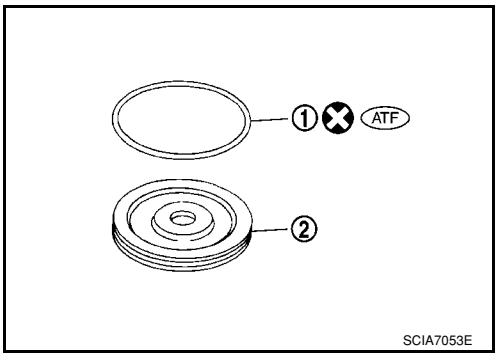

7. Install O-rings and to OD servo piston retainer.
   (1): O-ring (small diameter)
   (2): O-ring (medium diameter)
   (3): O-ring (large diameter)
   (4): OD servo piston retainer

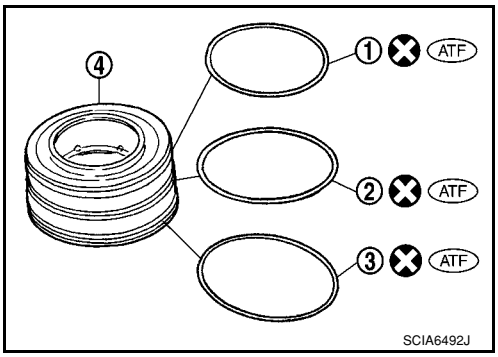

8. Install OD servo piston (1) to OD servo piston retainer (2) fitting the figure direction on it.

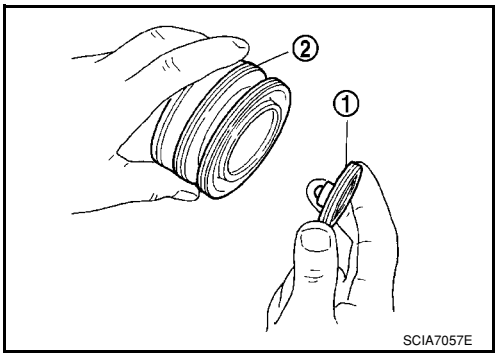

9. Install 2nd servo return spring (2) and band servo piston assembly (3) to transaxle case (1).

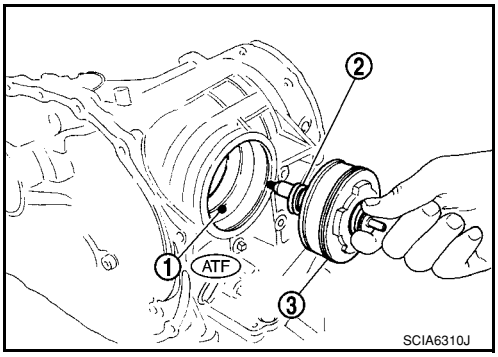

10. Install OD servo piston assembly (2) to transaxle case (1).

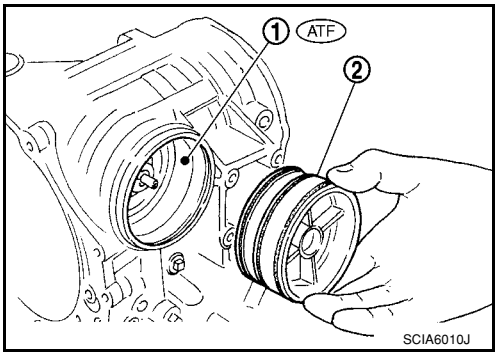

11. Push in OD servo piston assembly using a puller A (commercial service tool) and a suitable drift B, and install snap ring (1) to transaxle case using a flat-bladed screwdriver C.

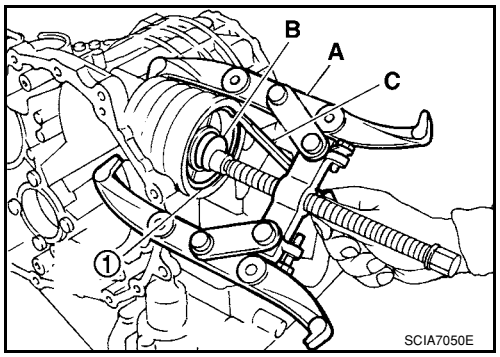

Final Drive

INFOID:0000000001703390

COMPONENTS

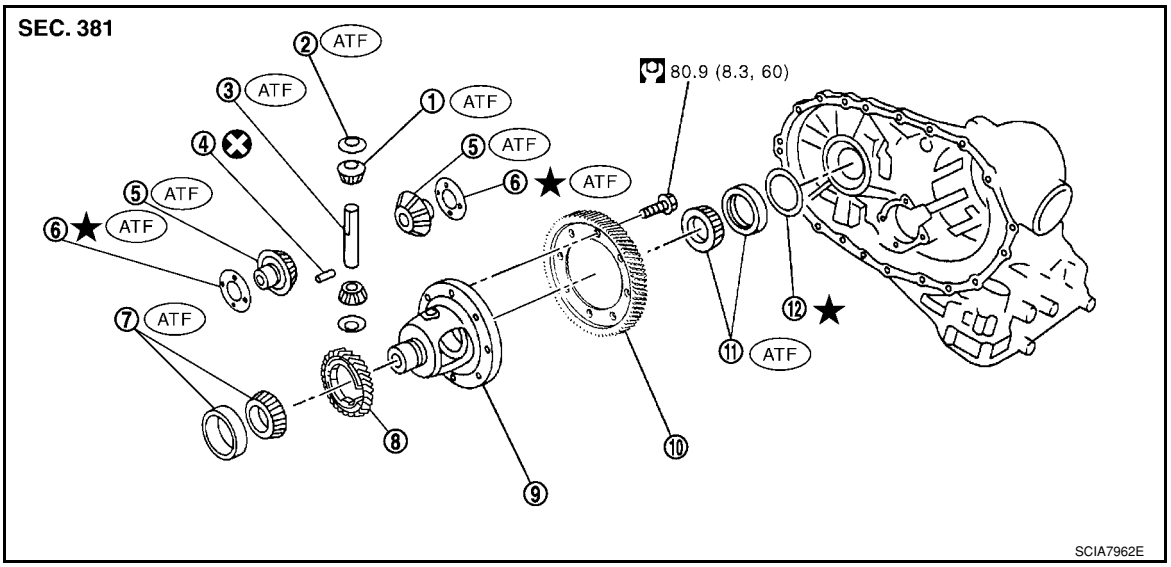

1. Pinion mate gear	2. Pinion mate gear thrust washer	3. Pinion mate shaft
4. Lock pin	5. Side gear	6. Side gear thrust washer
7. Differential side bearing	8. Speedometer drive gear	9. Differential case
10. Final gear	11. Differential side bearing	12. Differential side bearing adjusting shim

Refer to GI section to make sure icons (symbol marks) in the figure. Refer to GI-8, "Component".

DISASSEMBLY

1. Remove final gear (1) from differential case (2).

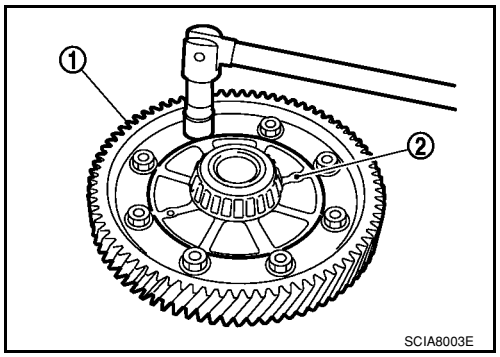

2. Press out differential side bearings.

Tool number: ST3306S001 (J-22888-D)

CAUTION:
Be careful not to mix up the right and left bearings.

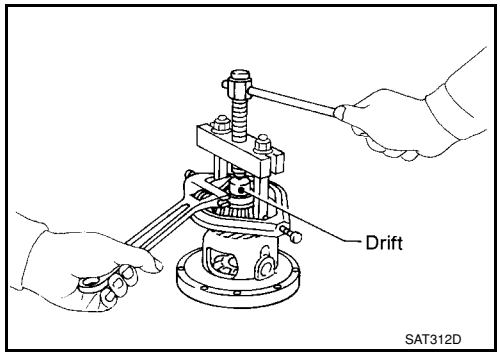

3. Remove speedometer drive gear from differential case.

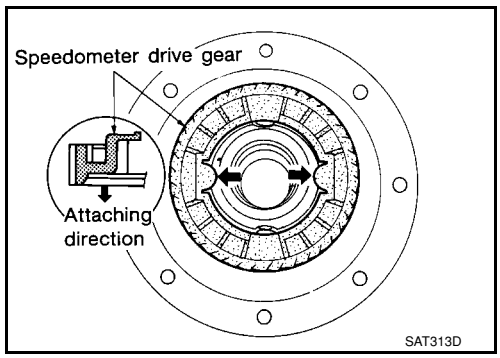

4. Drive out lock pin from differential case (1) using Tool (A).

Tool number: KV32101000 (J-25689-A)

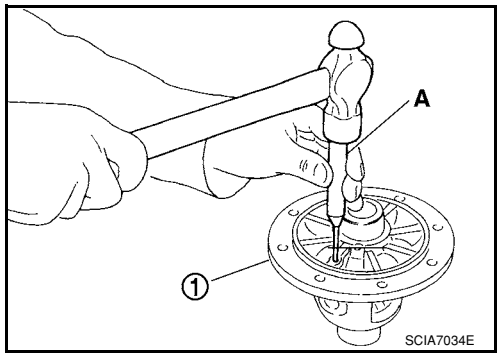

5. Draw out pinion mate shaft.
6. Remove pinion mate gears, pinion mate gear thrust washers, side gears and side gear thrust washers.

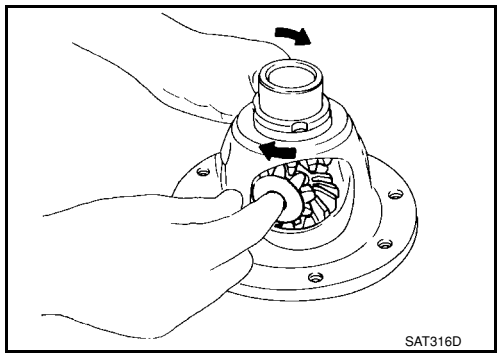

INSPECTION

Gears, Washers, Pinion Mate Shaft and Differential Case

- Check mating surfaces of differential case, side gears, pinion mate gears and pinion mate shaft. Replace if necessary.
- Check washers for wear. Replace if necessary.

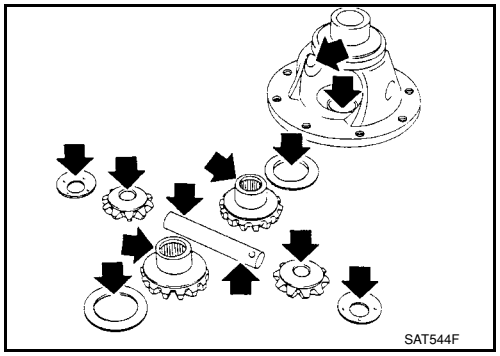

Bearings

- Make sure bearings roll freely and are free from noise, cracks, pitting or wear. Replace if necessary.
  CAUTION:
  When replacing taper roller bearing, replace outer and inner race as a set.

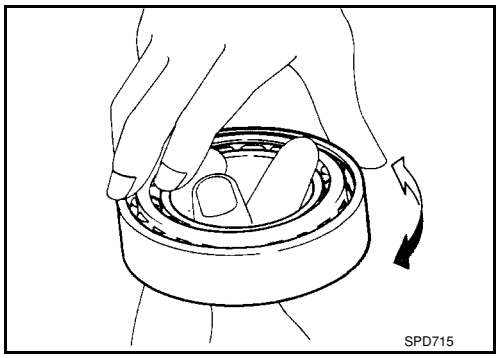

ASSEMBLY

1. Attach side gear thrust washers to side gears, then install pinion mate thrust washers and pinion mate gears in place.
   CAUTION:
   Apply ATF to any parts.

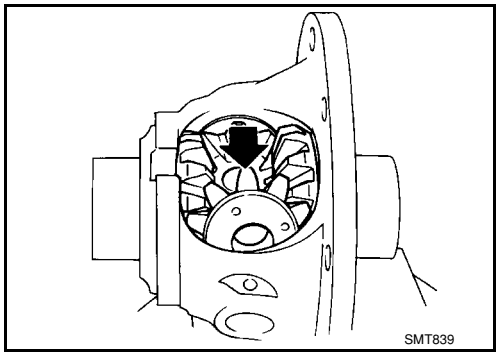

2. Insert pinion mate shaft.
   CAUTION:
   - **When inserting, be careful not to damage pinion mate gear thrust washers.**
   - **Apply ATF to pinion mate shaft.**

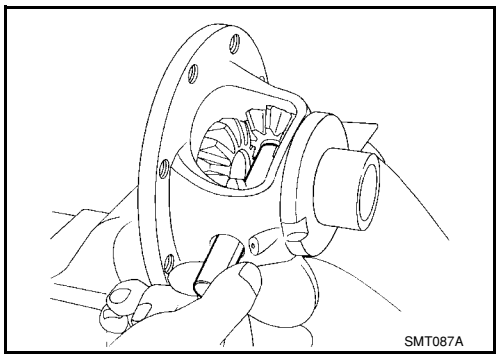

3. Select side gear thrust washers according to the following procedures.

a. Place differential case in the upright position so that the side gear to be measured is at the top.
(A): Location for inserting feeler gauge
(B): Side gear tooth
(C): The center line of differential case

b. In order to maximize the back clearance, rotate side gears so that a tooth on side gears at the top and bottom will align at the same position as shown in the figure.

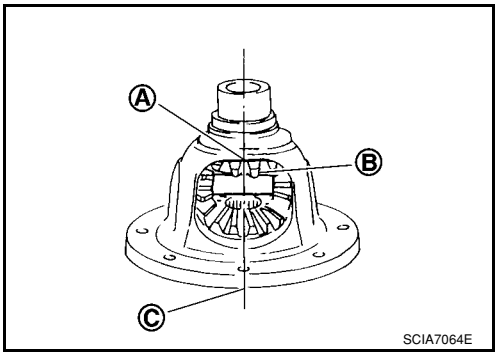

c. Adjust the back clearance of side gear according to the following procedures.

i. Insert feeler gauges A of the same thickness to the back of side gear from both sides, preventing side gear from falling, to measure the clearance.
- Measure clearance 3 times by rotating side gears and take the average.

CAUTION:
In all 3 measurements, maximize the clearance by aligning teeth on side gears at the top and bottom at the same position.

ii. Select side gear thrust washer so that the clearance will fall within the standard.

Differential side gear clearance:

Refer to AT-345, "Final Drive".

iii. Turn differential case upside down, and measure the back clearance of the other side gear in the same manner.
NOTE:
Adjust the clearance to approx. 0.1 mm (0.004 in) for used differential [driven approx. 3,000 km (1864 mile) or more].

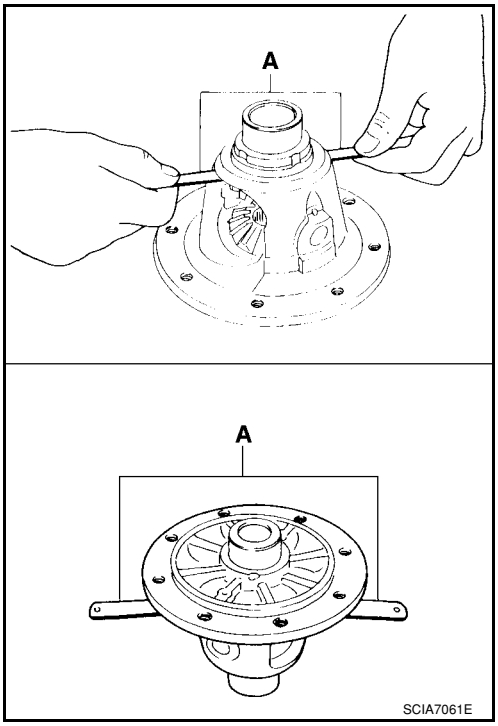

4. Install lock pin (1) to pinion mate shaft using the pin punch A.

Tool number: KV32101000 (J-25689-A)

CAUTION:
- **Do not reuse lock pin.**
- **Make sure that lock pin is flush with differential case.**

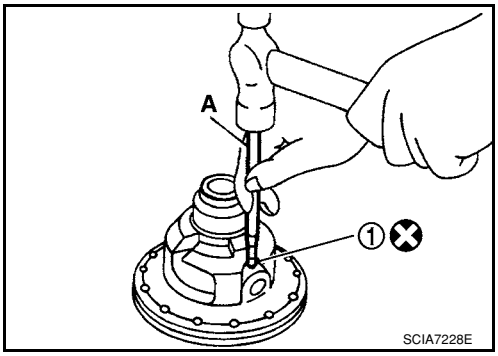

5. Install speedometer drive gear on differential case.

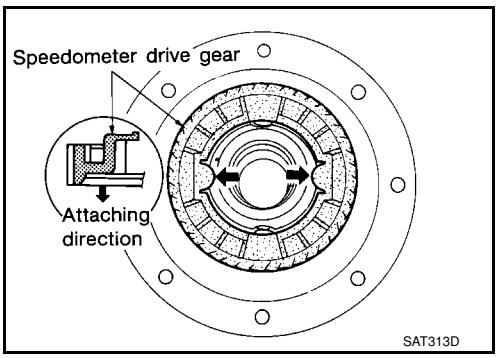

6. Set drift A [commercial service tool] on differential side bearing inner race, and press differential side bearing inner race into differential case.
   CAUTION:
   Apply ATF to differential side bearings.
7. Install differential side bearing outer race and differential side bearing adjusting shim on transaxle case. Refer to AT-318, "Assembly (1)".

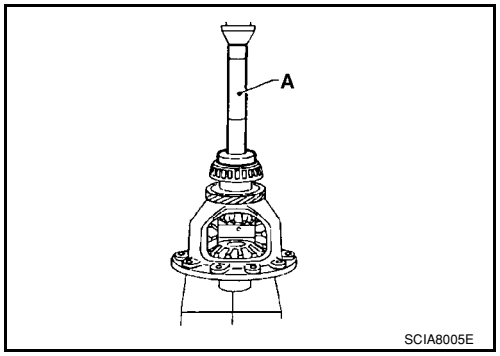

8. Tighten final gear and tighten fixing bolts to the specified torque in numerical order as shown in the figure after temporarily tightening them. Refer to "COMPONENTS".

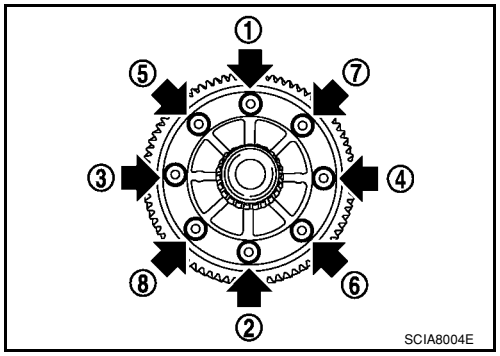

ASSEMBLY

Assembly (1)

INFOID:0000000001703391

1. Drive each differential side oil seal evenly using a drift (SST and commercial service tool) so that differential side oil seal protrudes by the dimension “C” or “D” respectively.
   (1): LH differential side oil seal
   (2): RH differential side oil seal
   (A): Transaxle case side
   (B): Converter housing side

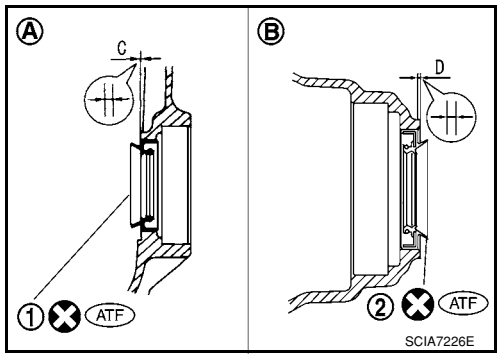

Unit: mm (in)

Dimension “C”	0 ± 0.5 (0 ± 0.020)
Dimension “D”	6 ± 0.5 (0.043 ± 0.020)

NOTE:
Differential side oil seal pulling direction is used as the reference.

Drift to be used:

Location	Tool number
Transaxle case side (A)	ST35325000 (–) KV31103000 (J-38982)
Converter housing side (B)	Commercial service tool [Inner diameter: 47 mm (1.85 in), outer diameter: 54 mm (2.13 in)]

2. Install O-ring on governor cap.
   CAUTION:
   - **Do not reuse O-ring.**
   - **Apply ATF to O-ring.**
3. Install governor cap in transaxle case.
4. Install snap ring in transaxle case.
5. Install parking actuator support (1) on transaxle case.
   (A): Inside
   (B): Outside
   CAUTION:
   Be careful with the direction of parking actuator support (1).
6. Tighten parking actuator support fitting bolts to the specified torque. Refer to AT-230, "Component".

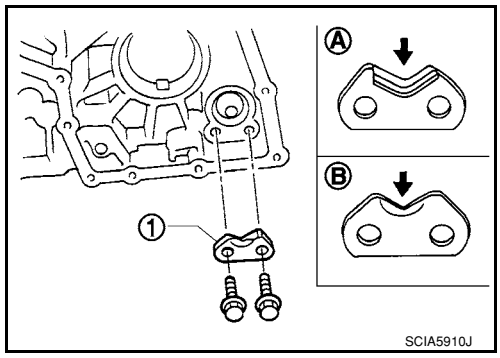

7. Install parking pawl (2) on transaxle case, and fix it with parking shaft (1).

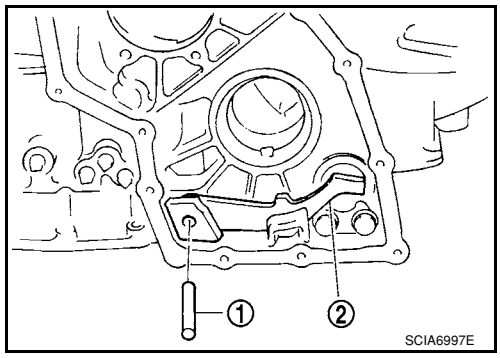

8. Install return spring (2) on parking shaft (3) and parking pawl (1) using a flat-bladed screwdriver.

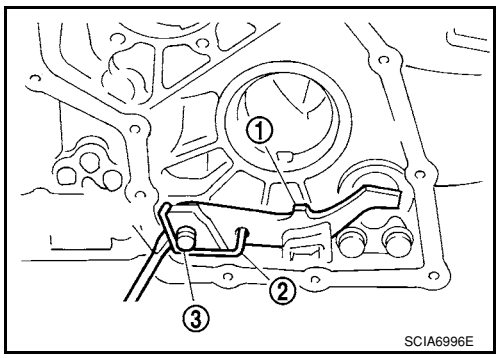

Adjustment (1)

INFOID:0000000001703392

DIFFERENTIAL SIDE BEARING PRELOAD

1. Select proper thickness of differential side bearing adjusting shim using the following procedures.

a. Install differential side bearing outer race without differential side bearing adjusting shim on transaxle case.
CAUTION:
Apply ATF to differential side bearing outer race.

b. Install differential side bearing outer race on converter housing.
CAUTION:
Apply ATF to differential side bearing outer race.

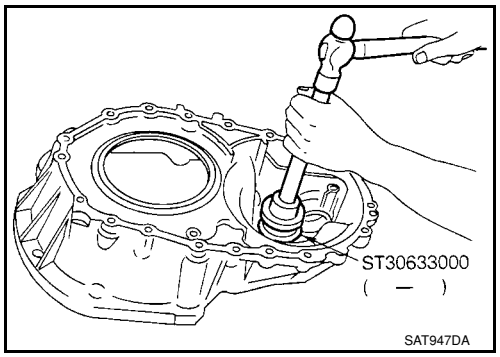

c. Place final drive assembly on transaxle case.

d. Tighten converter housing fitting bolts (1) and (2) to the specified torque. Refer to AT-313, "Final Drive".

Bolt	1	2
Bolt length [mm (in)] ℓ	32.8 (1.291)	40 (1.57)
Number of bolts	10	10

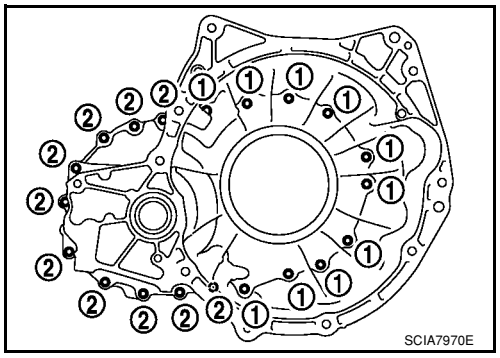

e. Attach dial indicator on differential case at converter housing side.
f. Insert SST into differential side gear from transaxle case side.
g. Move SST up and down and measure dial indicator deflection.
h. Select proper thickness of differential side bearing adjusting shim. Refer to “Parts Information” for differential side bearing adjusting shim selection.
Suitable shim thickness = Dial indicator deflection + Specified bearing preload

Suitable shim thickness = Dial indicator deflection + Specified bearing preload

Bearing preload: Refer to AT-345, "Final Drive".

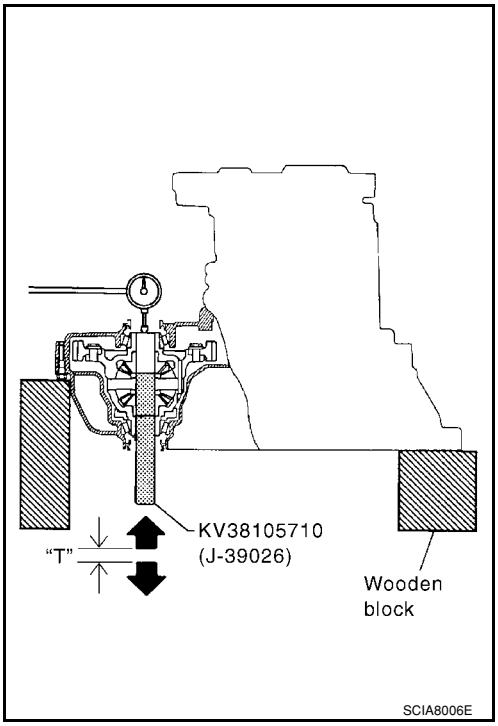

i. Remove converter housing from transaxle case.
j. Remove final drive assembly from transaxle case.
k. Remove differential side bearing outer race from transaxle case.
l. Reinstall differential side bearing outer race and differential side bearing adjusting shim selected from “Parts Information” on transaxle case.
m. Reinstall converter housing on transaxle case and tighten converter housing mounting bolts to the specified torque. Refer to AT-230, "Component".

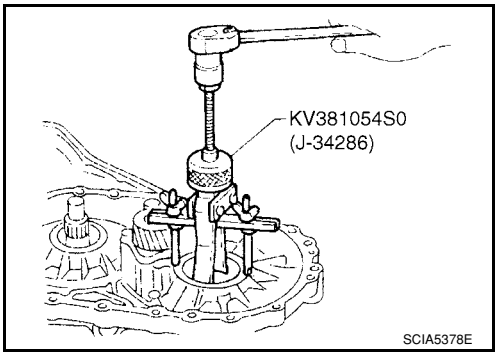

n. Insert SST and measure turning torque of final drive assembly.
- **Turn final drive assembly in both directions several times to seat bearing rollers correctly.**

Turning torque of final drive assembly (New bearing):

Refer to AT-345, "Final Drive".

- **When old bearing is used again, turning torque will be slightly less than the above.**
- **Make sure torque is close to the specified range.**

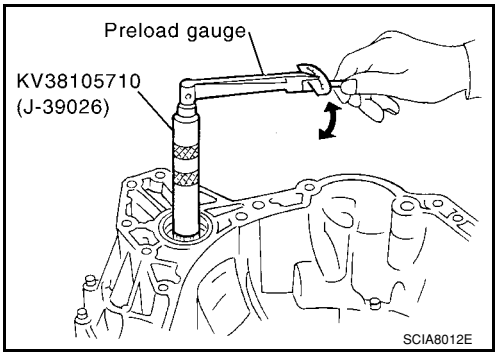

REDUCTION PINION GEAR BEARING PRELOAD

1. Select proper thickness of reduction pinion gear adjusting shim using the following procedures.

a. Place reduction pinion gear on transaxle case as shown in the figure.

b. Install idler gear bearing outer race on transaxle case. Refer to AT-302, "Output Shaft, Output Gear, Idler Gear, Reduction Pinion Gear and Bearing Retainer".

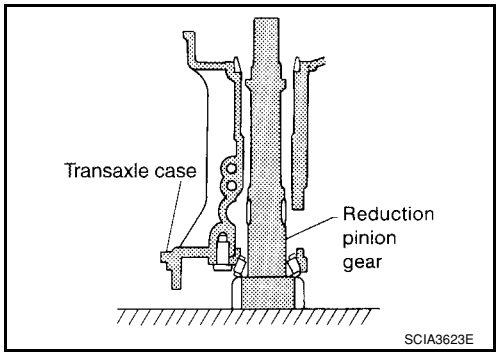

c. Place idler gear bearing inner race on outer race.

d. Measure dimensions “B”, “C” and “D”, and calculate dimension “A”.

“A”: Distance between the surface of idler gear bearing inner race and the adjusting shim mating surface of reduction pinion gear.

A = D – (B + C)

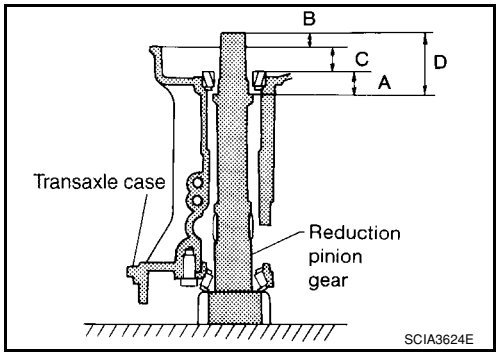

- Measure dimension “B” between the end of reduction pinion gear and the surface of transaxle case.
- **Measure dimension “B” in at least two places, and take the average.**

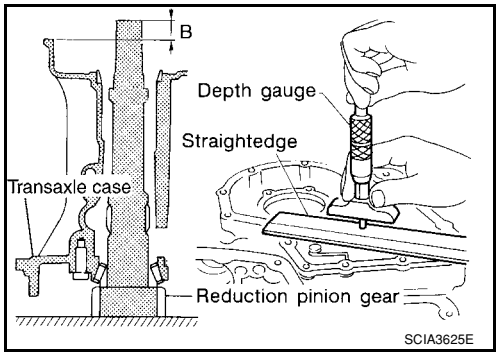

- Measure dimension “C” between the surface of idler gear bearing inner race and the surface of transaxle case.
- **Measure dimension “C” in at least two places, and take the average.**

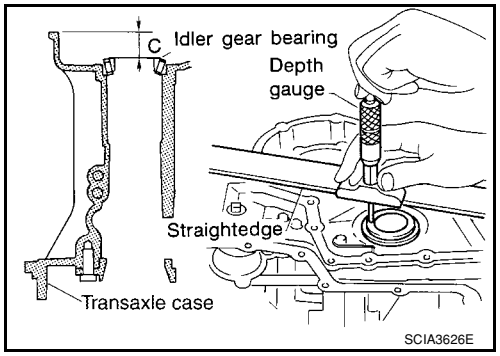

- Remove reduction pinion gear from transaxle case.
- Measure dimension “D” between the end of reduction pinion gear and the adjusting shim mating surface of reduction pinion gear.
- **Measure dimension “D” in at least two places, and take the average.**
- Calculate dimension “A”.

A = D – (B + C)

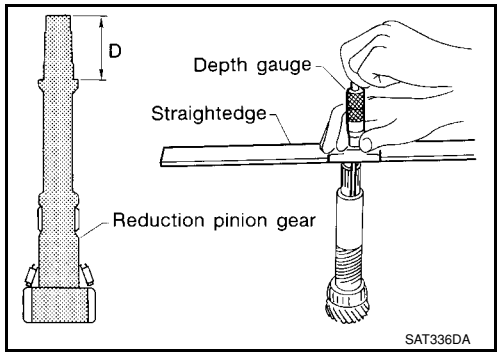

e. Measure dimension “E” between the end of idler gear and idler gear bearing inner race mating surface of idler gear.
   - **Measure dimension “E” in at least two places, and take the average.**

f. Select proper thickness of reduction pinion gear adjusting shim. Refer to “Parts Information” for reduction pinion gear adjusting shim selection.

Proper shim thickness = A – E – 0.05 mm (0.0020 in)*

(*: Bearing preload)

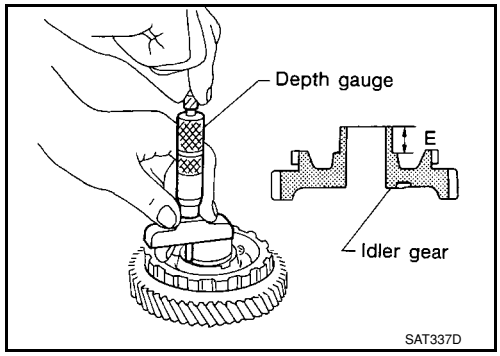

2. Install reduction pinion gear and reduction pinion gear adjusting shim selected in step 1-f on transaxle case.
   CAUTION:
   Apply ATF to reduction pinion gear bearing.
3. Press idler gear bearing inner race on idler gear. Refer to AT-302, "Output Shaft, Output Gear, Idler Gear, Reduction Pinion Gear and Bearing Retainer".
4. Press idler gear on reduction pinion gear.
   CAUTION:
   - **Apply ATF to idler gear bearing.**
   - **Press idler gear until idler gear fully contacts reduction pinion gear bearing adjusting shim.**

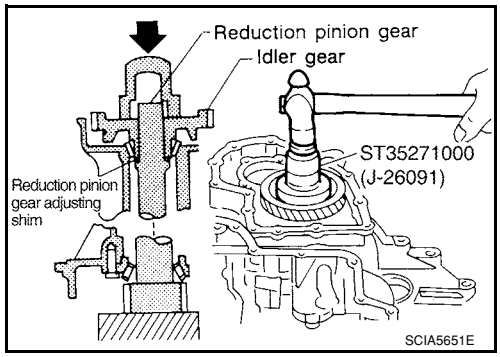

5. Set manual shaft in “P” position to fix idler gear.
6. Tighten lock nut of idler gear to the specified torque. Refer to AT-230, "Component".
   CAUTION:
   Lock idler gear with parking pawl when tightening lock nut.
7. Measure turning torque of reduction pinion gear.

Turning torque of reduction pinion gear:

Refer to AT-345, "Reduction Pinion Gear".

- **When measuring turning torque, turn reduction pinion gear in both directions several times to seat bearing rollers correctly.**
- **If turning torque is out of specification, decrease or increase thickness of reduction pinion gear adjusting shim.**

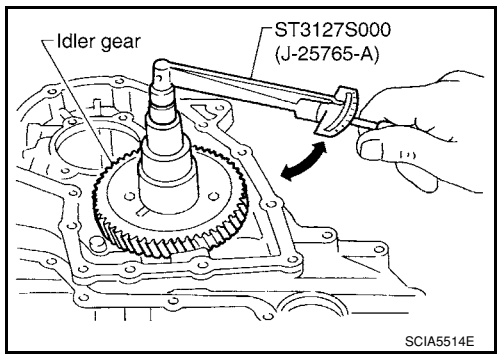

8. After properly adjusting turning torque, clinch idler gear lock nut as shown.
   CAUTION:
   Do not reuse idler gear lock nut.

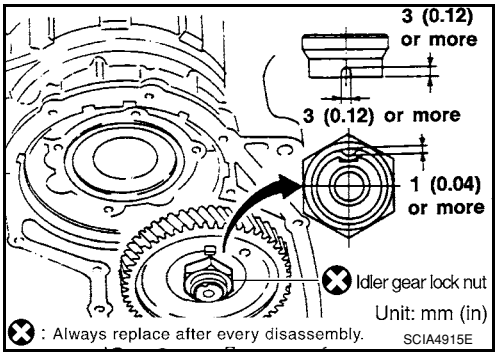

OUTPUT SHAFT END PLAY

1. Select proper thickness of output shaft adjusting shim using the following procedures.

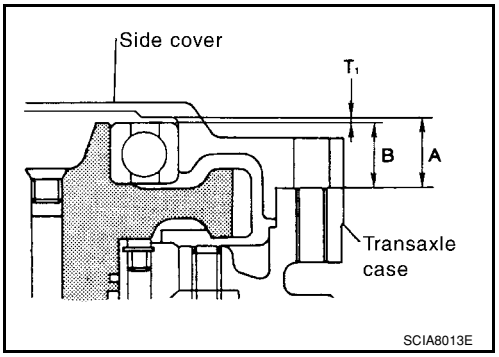

a. Install bearing retainer (1) in transaxle case. Refer to AT-302, "Output Shaft, Output Gear, Idler Gear, Reduction Pinion Gear and Bearing Retainer".

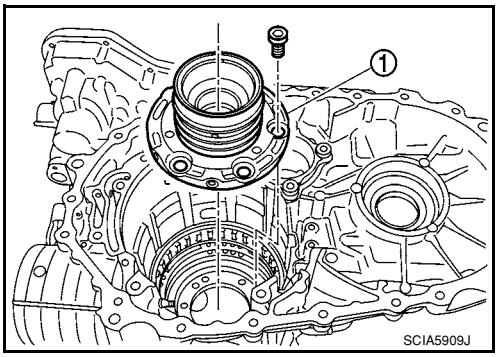

b. Install needle bearing on bearing retainer.
   CAUTION:
   Be careful to direction of needle bearing.

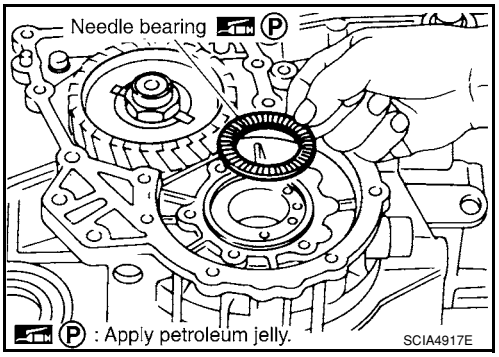

c. Install output shaft on transaxle case.

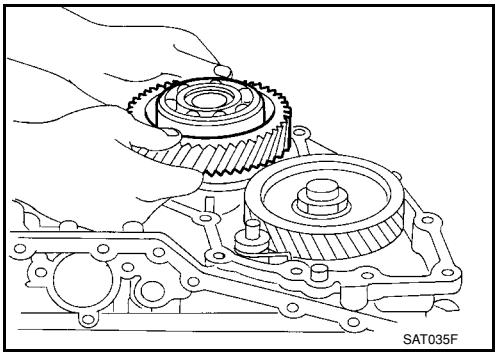

d. Measure dimensions "ℓ_1" and "ℓ_2" at side cover and then calculate dimension "A".
- **Measure dimension "ℓ_1" and "ℓ_2" in at least two places.**

"A": Distance between transaxle case fitting surface and adjusting shim mating surface.

$A = \ell_1 - \ell_2$

ℓ_2: Height of gauge

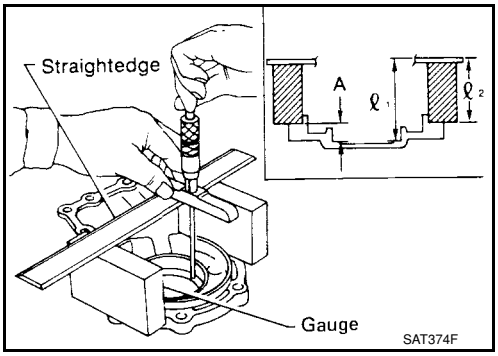

e. Measure dimensions "ℓ_2" and "ℓ_3" and then calculate dimension "B".
- **Measure dimension "ℓ_2" and "ℓ_3" in at least two places.**

"B": Distance between the end of output shaft bearing outer race and the side cover fitting surface of transaxle case.

$B = \ell_2 - \ell_3$

ℓ_2: Height of gauge

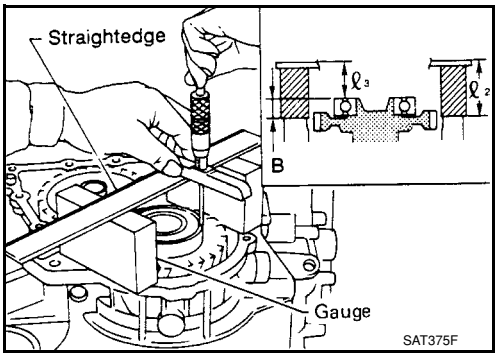

f. Select proper thickness of output shaft adjusting shim so that output shaft end play (clearance between side cover and output shaft bearing) is within specifications. Refer to "Parts Information" for output shaft adjusting shim selection.

Output shaft end play (A – B):

Refer to AT-346, "Output Shaft".

g. Install output shaft adjusting shim on output shaft bearing.

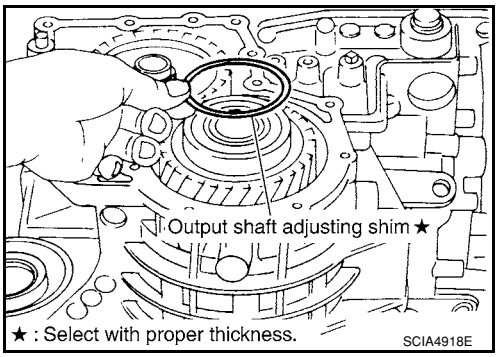

2. Apply recommended sealant (Genuine Anaerobic Liquid Gasket or equivalent.) to transaxle case as shown in figure.
⇦: Inside of side cover

"A": 3 - 5 mm (0.12 - 0.20 in)
"B": 8 mm (0.31 in) R
"C": 1.5 mm (0.059 in) dia.
"D": 4 mm (0.16 in)

CAUTION:
- **Apply the sealant on the center between the bolt holes.**

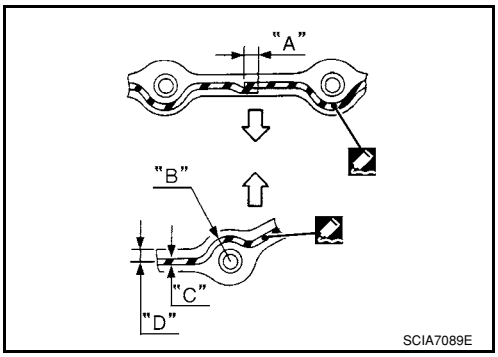

- **Completely remove all moisture, oil and old sealant, etc. from the transaxle case and side cover mounting surfaces.**

3. Fit mounting part of output shaft bearing on side cover to output shaft bearing, and after adjusting knock pin position, install it with light taps of a soft hammer and things like that.
   CAUTION:
   When installing, to avoid getting damaged and deformed, set mounting part straight to parallel with the mounting surface.

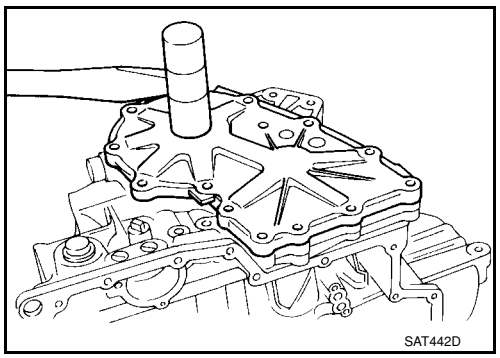

4. Tighten side cover fitting bolts to specified torque. Refer to AT-230, "Component".
   CAUTION:
   - **Do not mix bolts A and B.**
   - **Always replace bolts A as they are self-sealing bolts.**

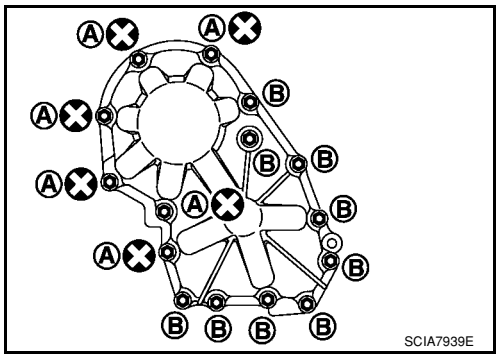

Assembly (2)

INFOID:0000000001703393

1. Remove paper rolled around bearing retainer.
2. Install thrust washer on bearing retainer.
   CAUTION:
   Align pawls of thrust washer with holes of bearing retainer.

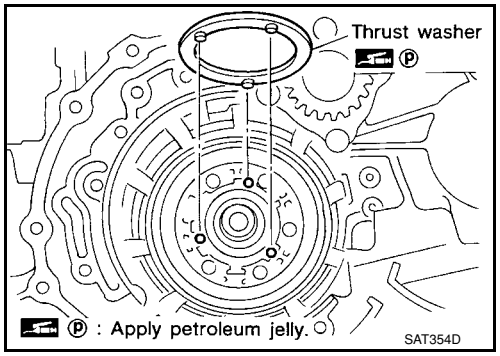

3. Install forward clutch assembly and overrun clutch assembly (1) into transaxle case.
   CAUTION:
   - **Align teeth of low & reverse brake drive plates before installing.**
   - **Make sure that bearing retainer seal rings are not spread.**

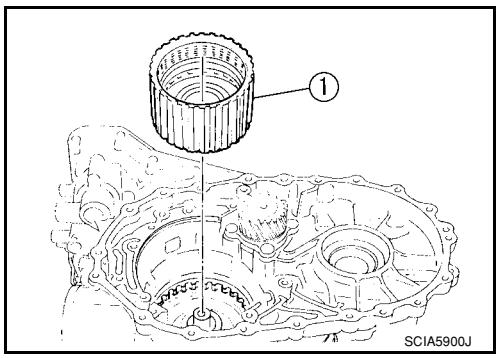

4. Install needle bearing (1) on bearing retainer.
   CAUTION:
   Be careful with the direction of needle bearing.

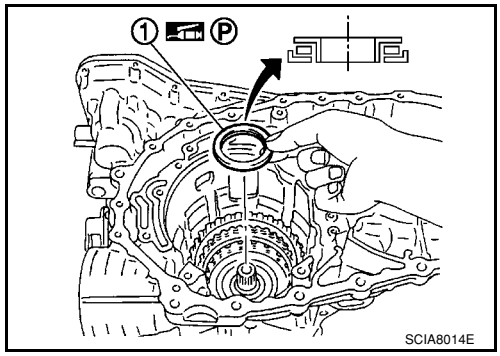

5. Install thrust washer (1) on overrun clutch hub (2).
   CAUTION:
   Align pawls of thrust washer (1) with holes of overrun clutch hub (2).

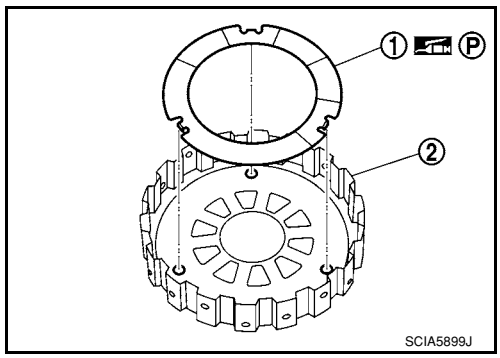

6. Install overrun clutch hub (1) into forward clutch drum.
   CAUTION:
   Align teeth of overrun clutch drive plates before installing.

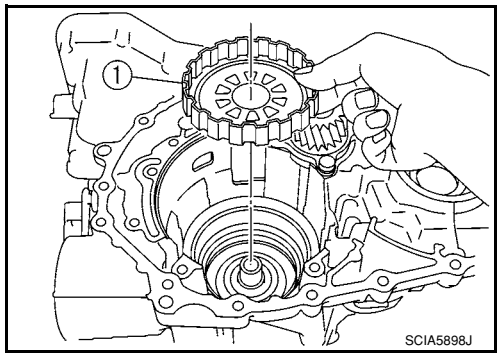

7. Hold forward clutch hub, and check that rear internal gear locks when tried to rotate counterclockwise.
   CAUTION:
   If rear internal gear rotates counterclockwise, check installation direction of forward one-way clutch.

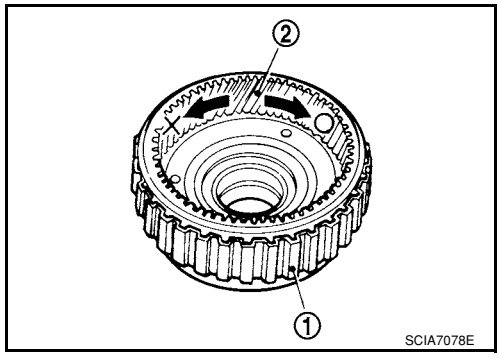

8. Install needle bearing (1) on rear internal gear (2).
   CAUTION:
   Be careful with the direction of needle bearing (1).

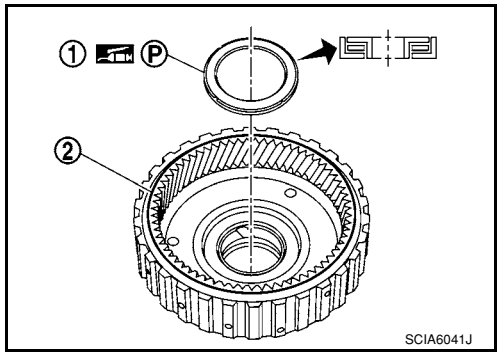

9. Install rear internal gear (1) and forward clutch hub (2) as a set into forward clutch drum.
   CAUTION:
   Align teeth of forward clutch drive plates before installing.

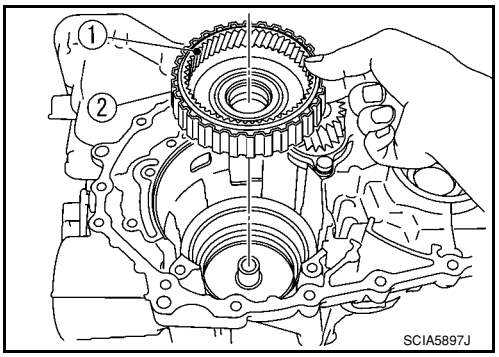

10. Install needle bearing (1) on rear planetary carrier (2).
    CAUTION:
    Be careful with the direction of needle bearing (1).

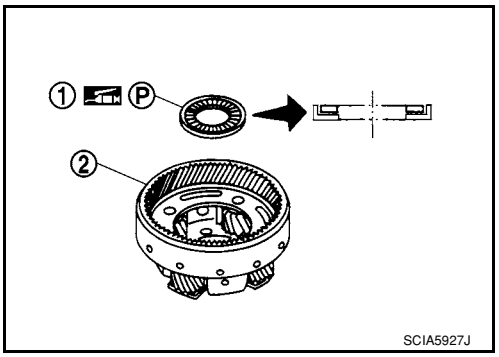

11. Install rear sun gear on rear planetary carrier.
    CAUTION:
    Be careful with the direction of rear sun gear.

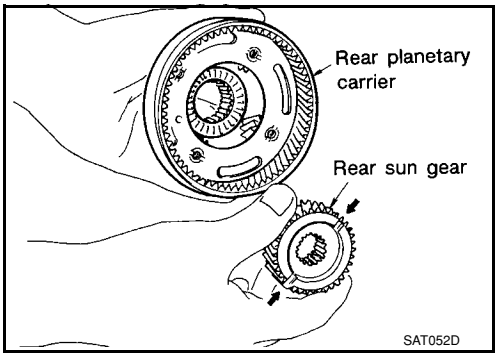

12. Install rear planetary carrier in transaxle case.

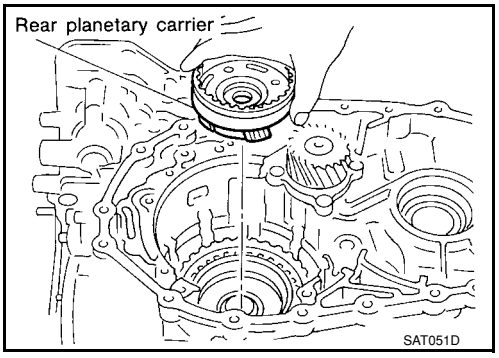

13. Install needle bearing (1) on front planetary carrier (2).
    CAUTION:
    Be careful with the direction of needle bearing (1).

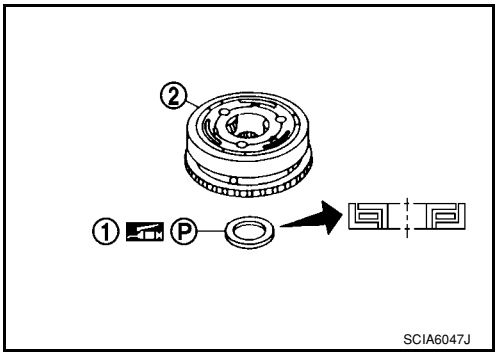

14. Install low one-way clutch to front planetary carrier by turning it in the direction of unlock.
15. Check that low one-way clutch rotates counterclockwise around front planetary carrier. Then try to turn it clockwise and check that it is locked.

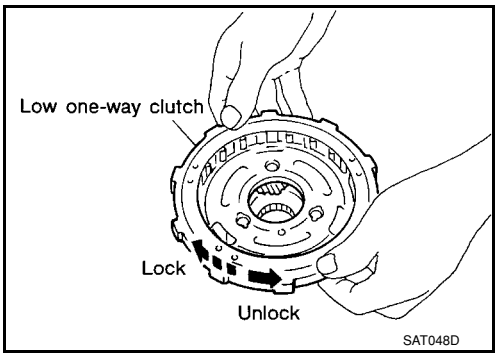

16. Install front planetary carrier (2) and low one-way clutch (1) as a set into transaxle case.

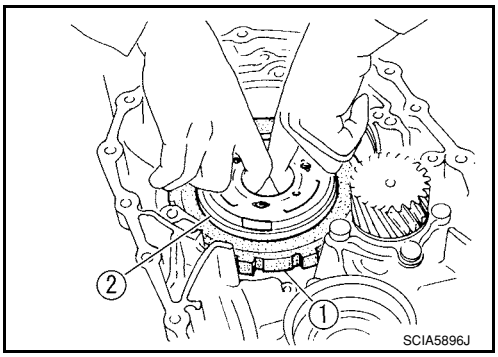

17. Install snap ring into transaxle case using a flat-bladed screwdriver.

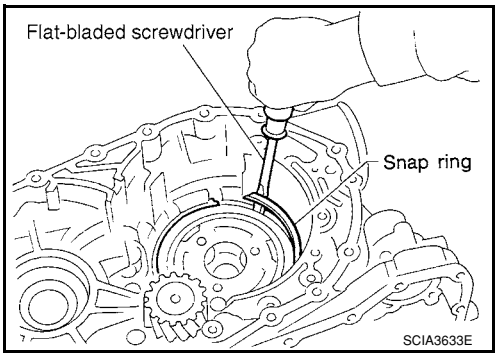

18. Install needle bearing (1) on front sun gear (2).
CAUTION:
Be careful with the direction of needle bearing (1).

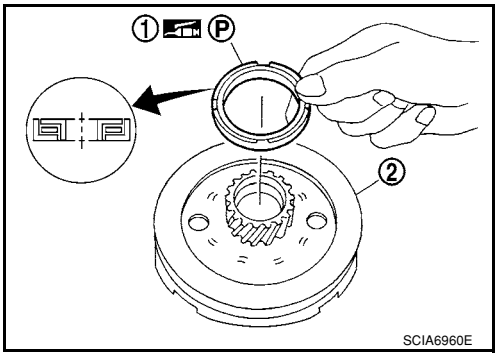

19. Install front sun gear on front planetary carrier.

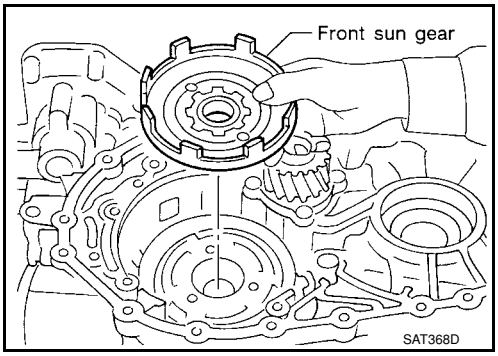

20. Install needle bearing on front sun gear.
CAUTION:
Be careful with the direction of needle bearing.

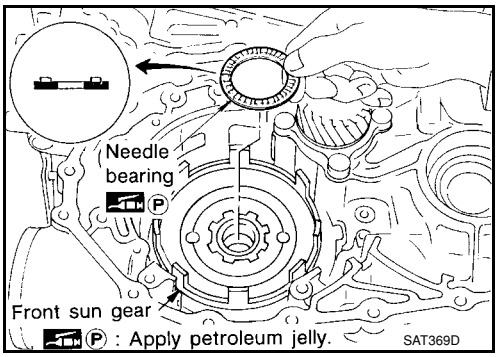

21. Install high clutch hub on front sun gear.

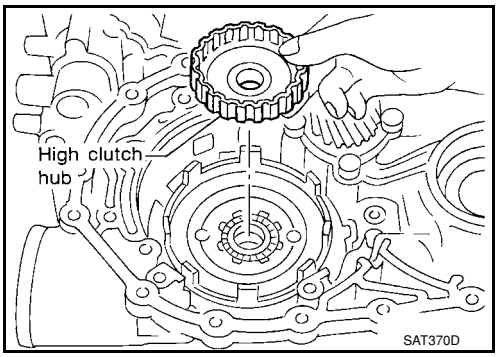

22. Install needle bearing on high clutch hub.
CAUTION:
Be careful with the direction of needle bearing.
23. Remove paper rolled around input shaft assembly (high clutch drum).

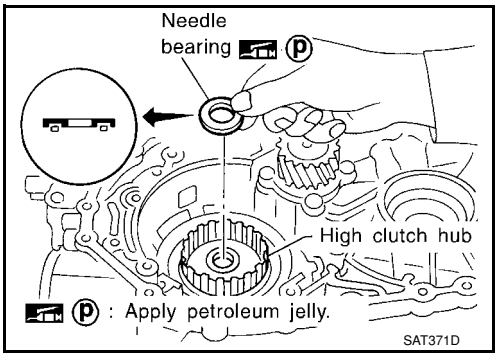

24. Install input shaft assembly (high clutch assembly) (1).
CAUTION:
Align teeth of high clutch drive plates before installing.

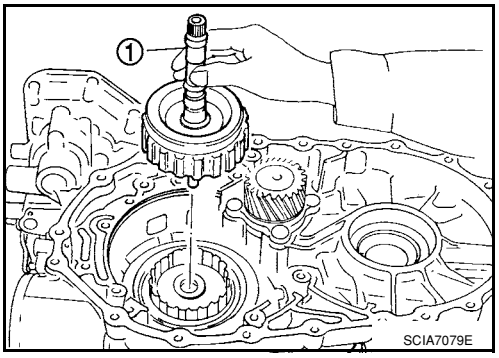

25. Install reverse clutch assembly.
CAUTION:
Align teeth of reverse clutch drive plates before installing.

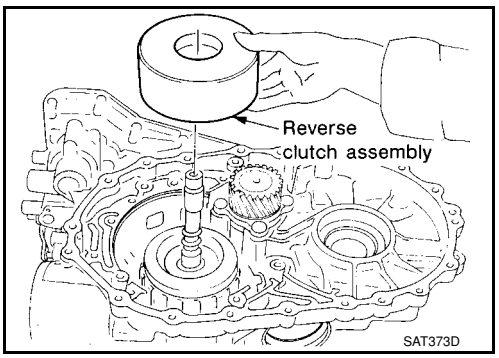

Adjustment (2)

INFOID:0000000001703394

When any parts listed below are replaced, adjust total end play and reverse clutch end play.

Part name	Total end play	Reverse clutch end play
Transaxle case	●	●
Overrun clutch hub	●	●
Rear internal gear	●	●
Rear planetary carrier	●	●
Rear sun gear	●	●
Front planetary carrier	●	●
Front sun gear	●	●
High clutch hub	●	●
Input shaft assembly (high clutch drum)	●	●
Oil pump cover	●	●
Reverse clutch drum	—	●

TOTAL END PLAY

- Measure clearance between reverse clutch drum and needle bearing for oil pump cover.
- Select proper thickness of bearing race so that end play is within specifications.

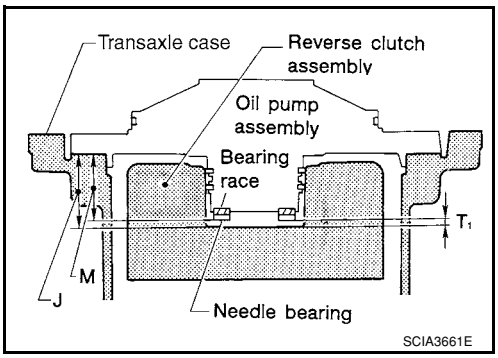

1. Measure dimensions “K” and “L”, and then calculate dimension “J”.

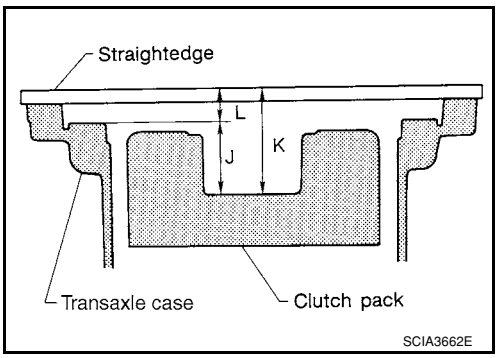

a. Measure dimension “K”.

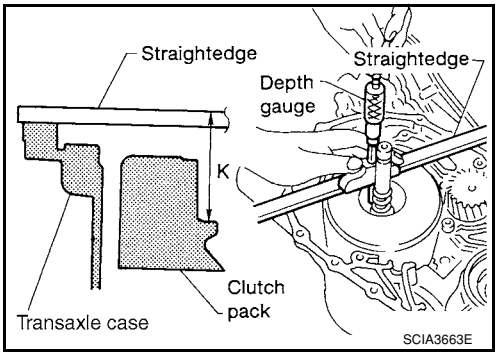

b. Measure dimension “L”.
c. Calculate dimension “J”.

“J”: Distance between oil pump fitting surface of transaxle case and needle bearing mating surface of input shaft assembly (high clutch drum).

J = K – L

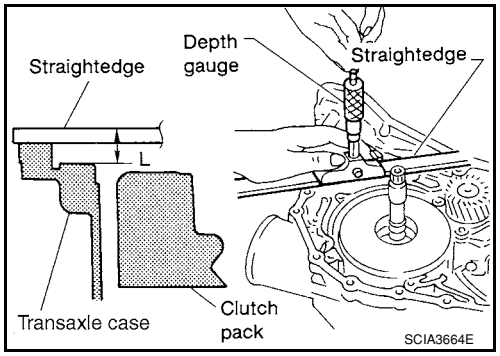

2. Measure dimension “M”.
a. Place bearing race and needle bearing on oil pump assembly.

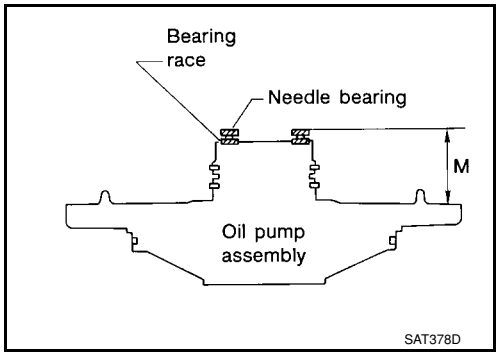

b. Measure dimension “M”.

“M”: Distance between transaxle case fitting surface of oil pump cover and needle bearing on oil pump cover.

“M_1”: Indication of gauge

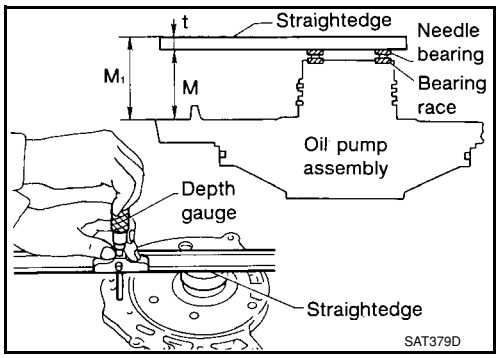

c. Measure thickness of straightedge “t”.

M = M_1 – t

3. Adjust total end play “T_1”.

T_1 = J – M

Total end play “T_1”:

Refer to AT-346, "Total End Play".

- Select proper thickness of bearing race so that total end play is within specifications. Refer to “Parts Information” for bearing race selection.

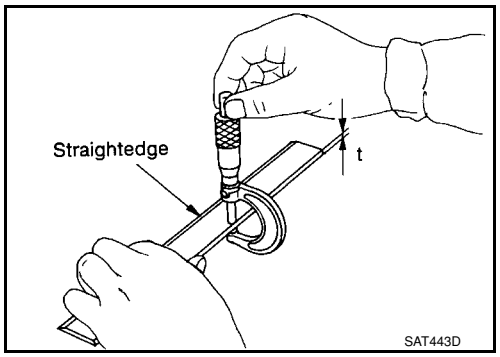

REVERSE CLUTCH END PLAY

- Measure clearance between oil pump cover and thrust washer for reverse clutch drum.
- Select proper thickness of thrust washer so that end play is within specification.

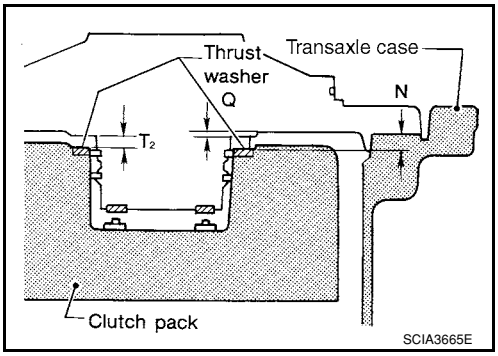

1. Measure dimensions “O” and “P”, and then calculate dimension “N”.

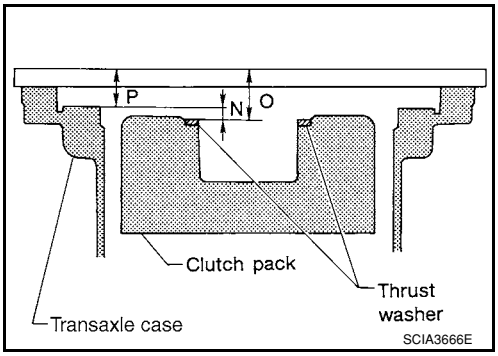

a. Place thrust washer on reverse clutch drum.
b. Measure dimension “O”.

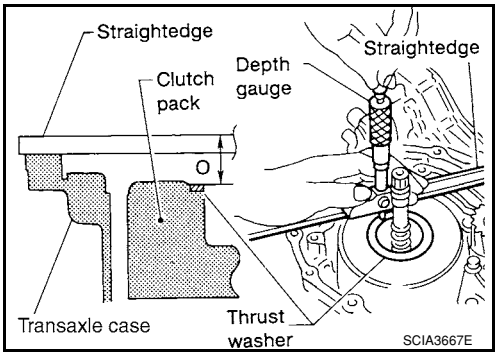

c. Measure dimension “P”.
d. Calculate dimension “N”.

“N”: Distance between oil pump fitting surface of transaxle case and thrust washer on reverse clutch drum.

N = O – P

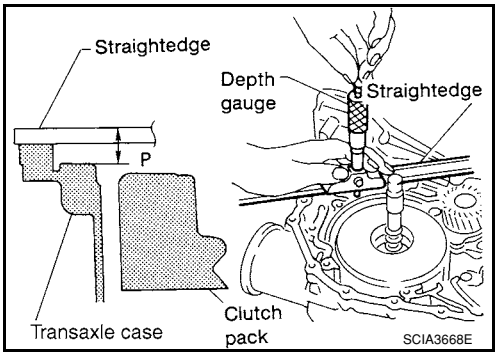

2. Measure dimensions “R” and “S”, and then calculate dimension “Q”.

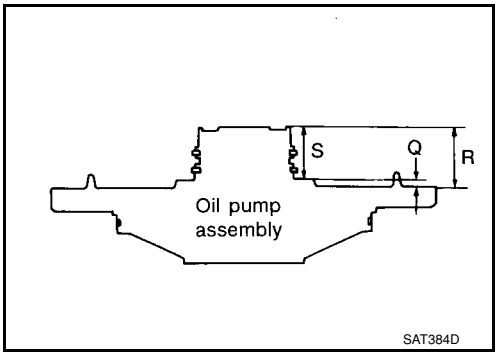

a. Measure dimension “R”.

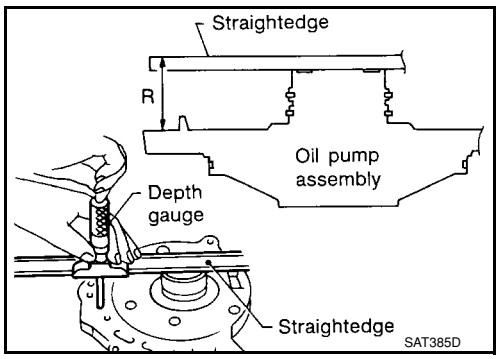

b. Measure dimension “S”.
c. Calculate dimension “Q”.

“Q”: Distance between transaxle case fitting surface and thrust washer mating surface.

Q = R – S

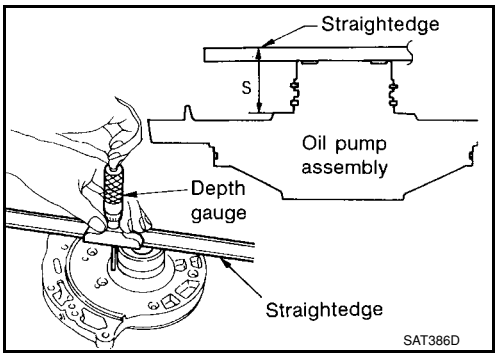

3. Adjust reverse clutch end play “T2”.

T2 = N – Q

Reverse clutch end play:

Refer to AT-346, "Reverse Clutch End Play".

- Select proper thickness of thrust washer so that reverse clutch end play is within specifications. Refer to “Parts Information” for thrust washer selection.

Assembly (3)

INFOID:0000000001703395

1. Remove reverse clutch assembly.
2. Install needle bearing on input shaft assembly (high clutch drum).
   CAUTION:
   Be careful with the direction of needle bearing.
3. Install reverse clutch assembly.
   CAUTION:
   Align teeth of reverse clutch drive plates before installing.

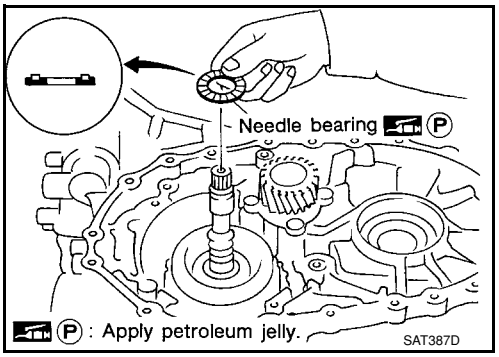

4. Install anchor end pin (2) and lock nut (1) on transaxle case.

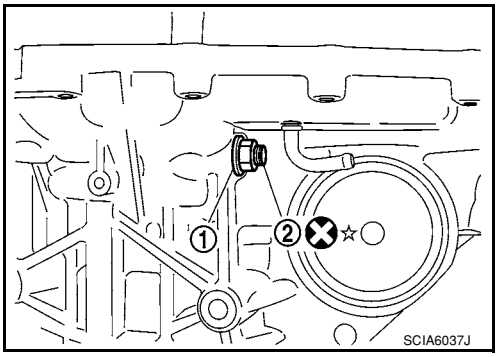

5. Place brake band on outside of reverse clutch drum.
6. Tighten anchor end pin just enough so that brake band is evenly fitted on reverse clutch drum.

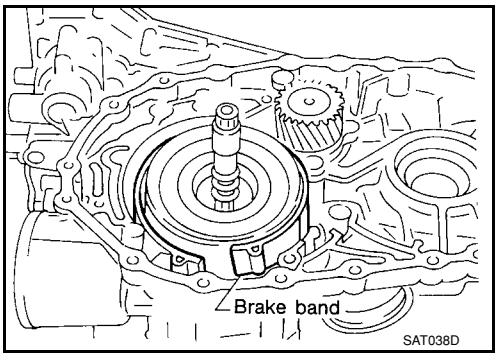

7. Install bearing race selected in total end play adjustment step on oil pump cover.
8. Install thrust washer selected in reverse clutch end play adjustment step on oil pump cover.
9. Install O-ring to oil pump assembly.
   CAUTION:
   - **Do not reuse O-ring.**
   - **Apply ATF to O-ring.**

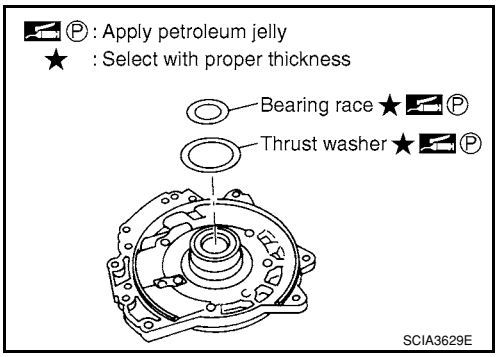

10. Install oil pump assembly (1) on transaxle case.
11. Tighten oil pump fitting bolts to the specified torque. Refer to AT-230, "Component".

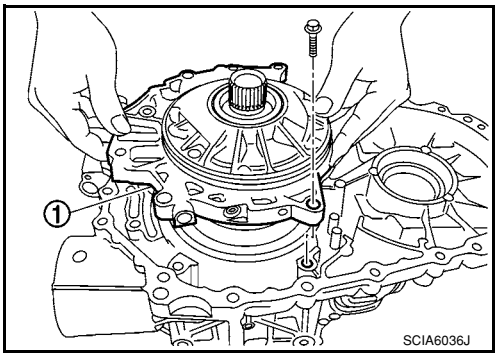

12. Install O-ring to input shaft assembly (high clutch drum).

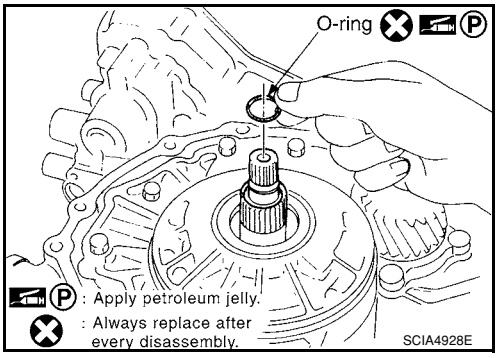

13. Adjust brake band.

a. Tighten anchor end pin to the specified torque.

   : 4.9 N·m (0.50 kg-m, 43 in-lb)

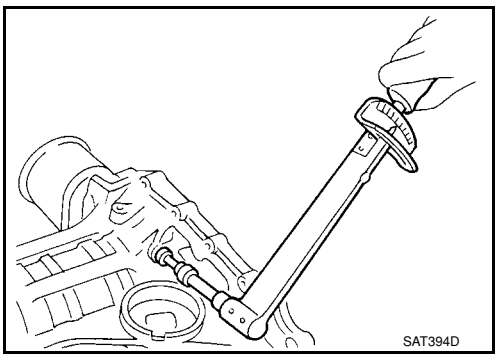

b. Back off anchor end pin two and a half turns.

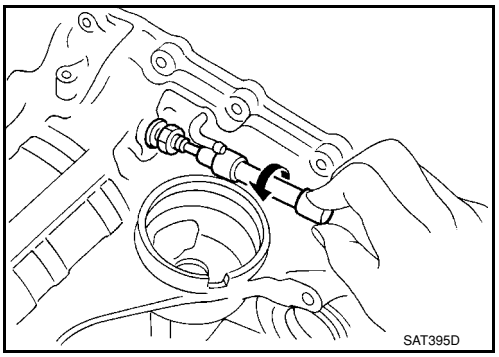

c. Tighten lock nut while holding anchor end pin. Refer to AT-230, "Component".

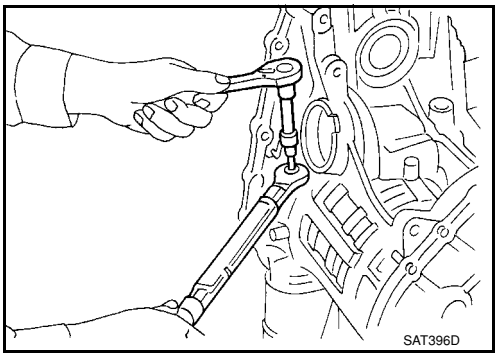

14. Apply compressed air into oil holes of transaxle case and check operation of brake band.

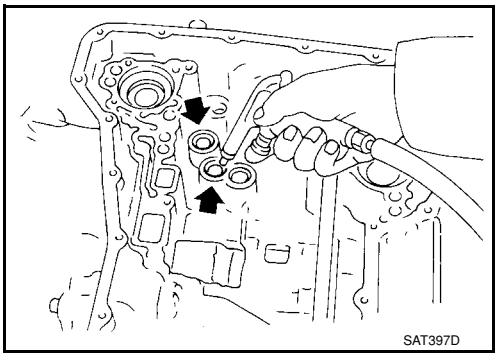

15. Install final drive assembly on transaxle case.

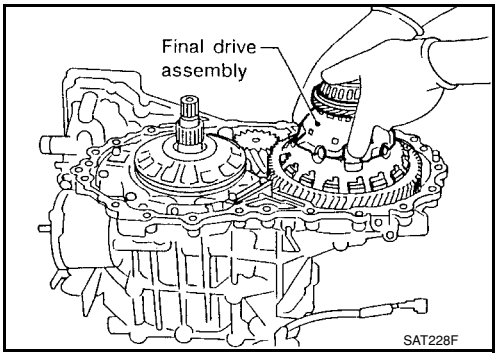

16. Install differential lubricant tube (1) and clips (2) on converter housing.
    ⬅: Bolt (3)
17. Tighten differential lubricant tube fitting bolts to the specified torque. Refer to AT-230, "Component".

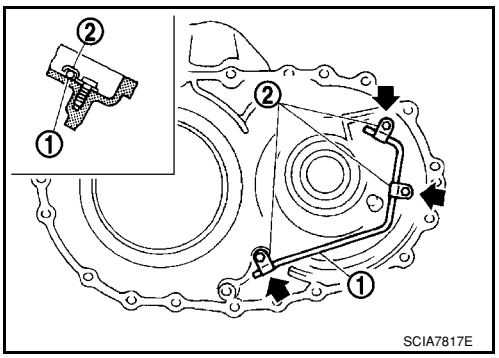

18. Install O-ring on differential oil port of transaxle case.

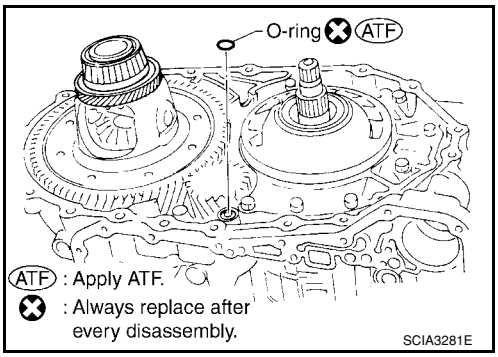

19. Apply locking sealant (loctite #518) to transaxle case as shown in the figure.
⇦: Inside of transaxle case

"A": 3 - 5 mm (0.12 - 0.20 in)
"B": 8 mm (0.31 in) R
"C": 1.5 mm (0.059 in) dia.
"D": 4 mm (0.16 in)

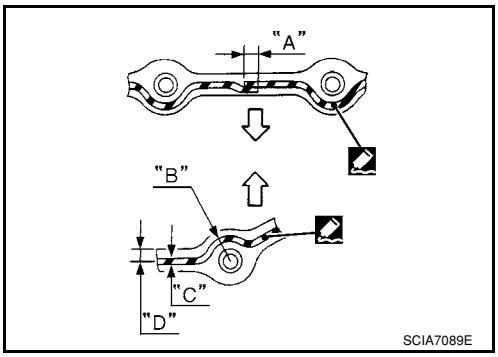

CAUTION:
Completely remove all moisture, oil and old sealant, etc. from the transaxle case and converter housing mating surfaces.

20. Install converter housing on transaxle case.
21. Install bracket on converter housing.
22. Tighten converter housing fitting bolts (1) and (2) to the specified torque. Refer to AT-230, "Component".

Bolt	1	2
Bolt length [mm (in)] ℓ	32.8 (1.291)	40 (1.57)
Number of bolts	10	10

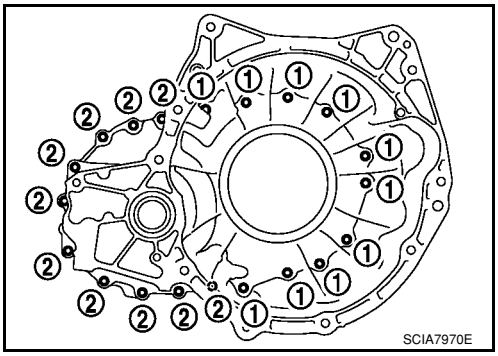

23. Install plug or speedometer pinion according to the following procedures.

a. With ABS

i. Install O-ring (3) to plug (1).

ii. Install plug (1) to converter housing (2).
⬅: Bolt (1)

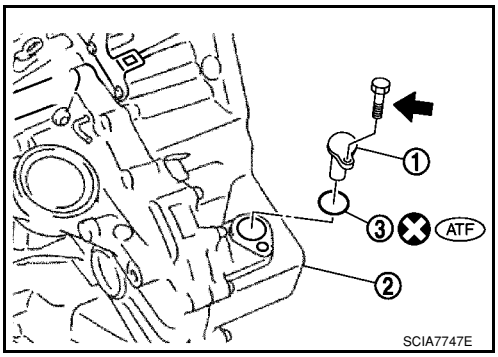

b. Without ABS

i. Install O-ring (3) to speedometer pinion (1).

ii. Install speedometer pinion (1) to converter housing (2).
⬅: Bolt (1)

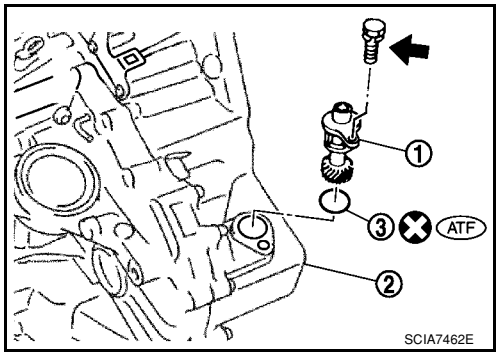

24. Tighten plug or speedometer pinion fitting bolt to the specified torque. Refer to AT-230, "Component".

25. Install accumulator pistons.

a. Install O-rings (1) on servo release accumulator piston (2) and N-D accumulator piston (3). Refer to AT-343, "Accumulator".

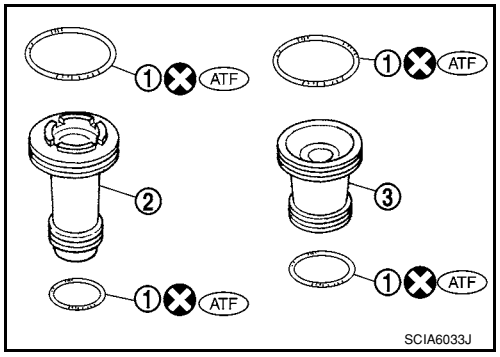

b. Install return springs (1), servo release accumulator piston (2) and N-D accumulator piston (3) into transaxle case (4). Refer to AT-343, "Accumulator".

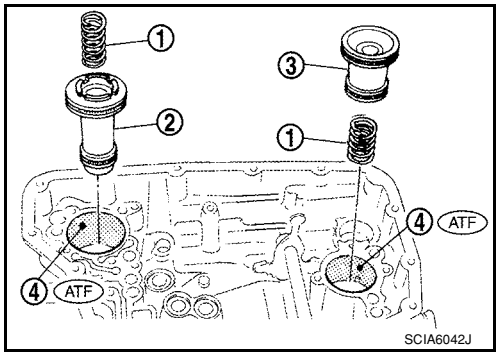

26. Install lip seals (1) for band servo oil holes on transaxle case.

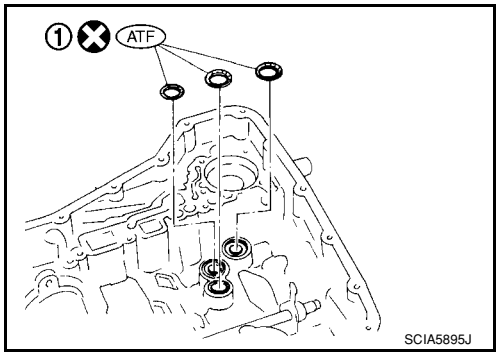

27. Install control valve assembly on transaxle case.

a. Install O-ring on terminal body.
CAUTION:
- **Do not reuse O-ring.**
- **Apply ATF to O-ring.**

b. Insert manual valve into control valve assembly.
CAUTION:
Be careful not to drop manual valve.

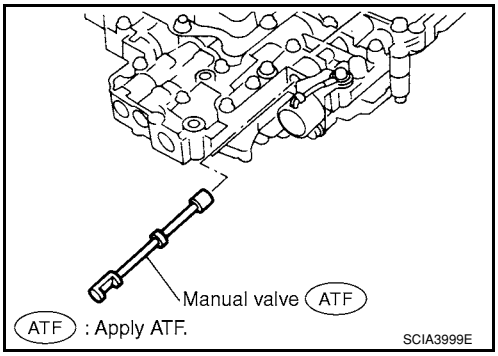

c. Set manual shaft in “N” position.
d. Install control valve assembly on transaxle case while aligning manual valve (2) with manual plate (1).

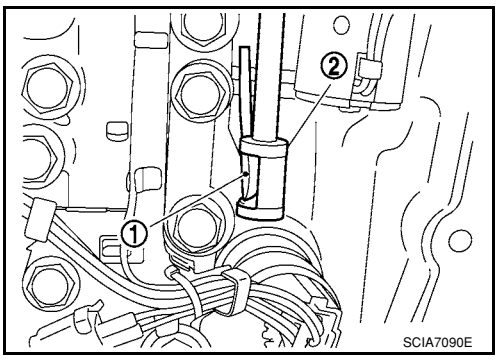

e. Install terminal body (2) into transaxle case by pushing it.
f. Install snap ring (1) to terminal body (2).

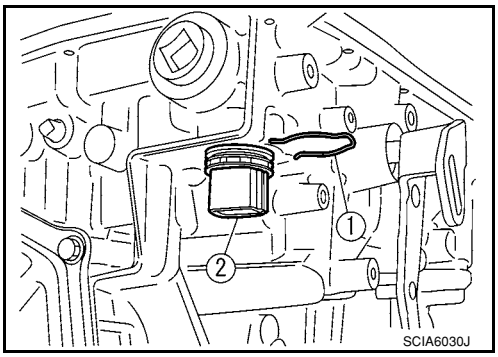

g. Tighten bolts **A**, **B** and **C** to the specified torque. Refer to AT-230, "Component".

Bolt length, number and location:

Bolt symbol	A	B	C
Bolt length “ℓ” [mm (in)] ℓ	40.0 mm (1.575 in)	33.0 mm (1.299 in)	43.5 mm (1.713 in)
Number of bolts	5	6	2

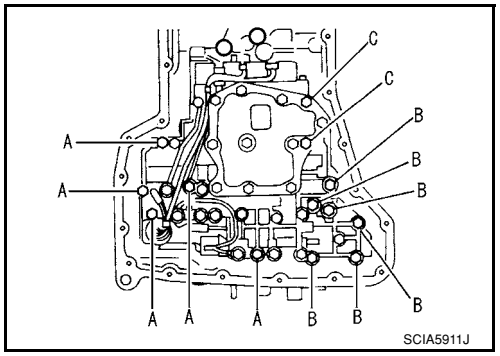

28. Install oil pan.
a. Attach magnets on oil pan.

b. Install oil pan gasket on transaxle case.
CAUTION:
- **Completely remove all moisture, oil and old gasket, etc. from the oil pan gasket mounting surface of transaxle case.**
- **Do not reuse oil pan gasket.**

c. Install oil pan on transaxle case.
CAUTION:
Completely remove all moisture, oil and old gasket, etc. from the oil pan gasket mounting surface of oil pan.

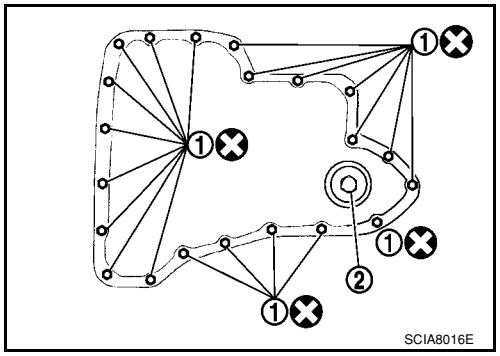

d. Tighten oil pan fitting bolts (1) to the specified torque. Refer to AT-230, "Component".
CAUTION:
- **Always replace oil pan fitting bolts (1) as they are self-sealing bolts.**
- **Tighten four bolts in a criss-cross pattern to prevent dislocation of gasket.**

e. Install drain plug gasket and drain plug (2) to oil pan.
CAUTION:
Do not reuse drain plug gasket.

f. Tighten drain plug to the specified torque. Refer to AT-230, "Component".

29. Install PNP switch (2) on transaxle case.
⬅: Bolt (3)

a. Set manual shaft (1) in “P” position.
b. Temporarily install PNP switch (2) on manual shaft (1).
c. Set manual shaft (1) in “N” position.
d. Use a 4 mm (0.16 in) dia. pin for this adjustment.
i. Insert the pin straight into the manual shaft (1) adjustment hole.
ii. Rotate PNP switch (2) until the pin can also be inserted straight into hole in PNP switch (2).
e. Tighten PNP switch fitting bolts to the specified torque. Refer to AT-230, "Component".
f. Remove pin from adjustment hole after adjusting PNP switch (2).

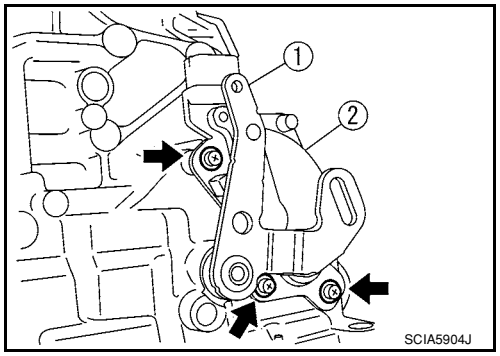

30. Install O-ring (3) to turbine revolution sensor (power train revolution sensor) (1).
31. Install turbine revolution sensor (power train revolution sensor) (1) to transaxle case (2).
⬅: Bolt (1)
32. Tighten turbine revolution sensor (power train revolution sensor) fitting bolt to the specified torque. Refer to AT-230, "Component".

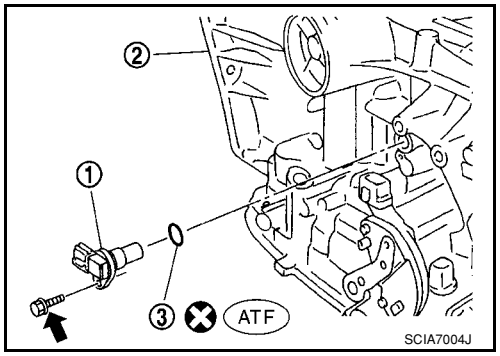

33. Install revolution sensor (1) to transaxle case (2).
34. Tighten revolution sensor fitting bolts to the specified torque. Refer to AT-230, "Component".
⬅: Bolt (2)

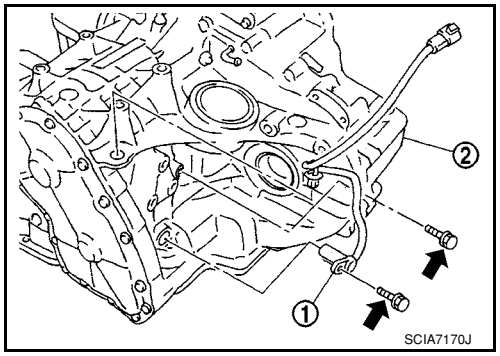

CAUTION:

Ensure revolution sensor harness is firmly secured with bolt.
(1): Revolution sensor
⬅: Bolt (1)

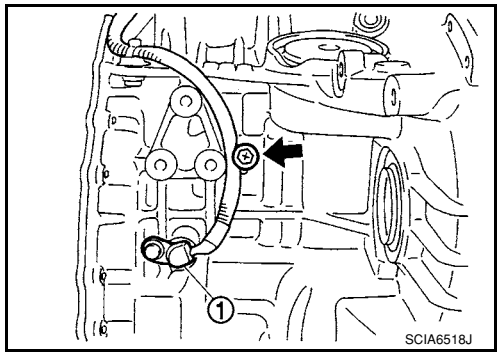

35. Install torque converter.

a. Pour ATF into torque converter.
   - **Approximately 1 liter (1 US qt, 7/8 Imp pt) of fluid is required for a new torque converter.**
   - **When reusing old torque converter, add the same amount of ATF as was drained.**

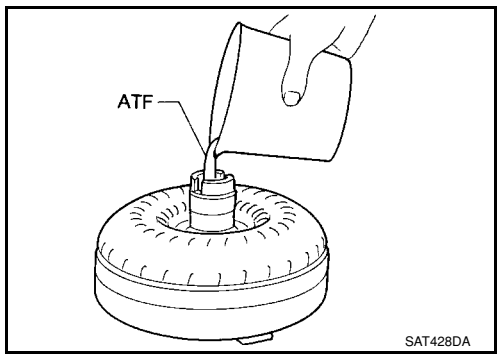

b. Install torque converter while aligning notches of torque converter with notches of oil pump.

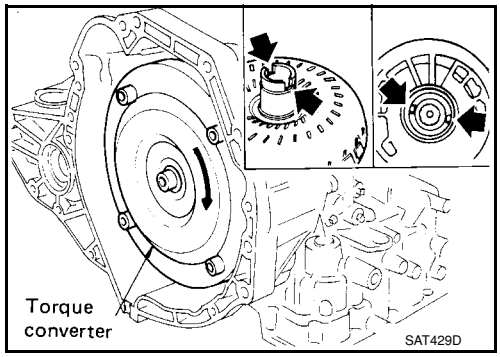

c. Measure distance “A” to make sure that torque converter is in proper position.

Distance “A”: 14.4 mm (0.567 in) or more

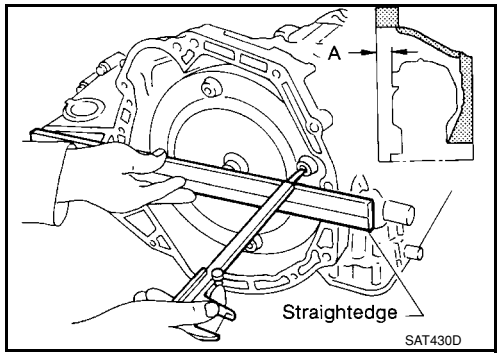

SERVICE DATA AND SPECIFICATIONS (SDS)

General Specification

INFOID:0000000001703396

Engine		MR18DE
Automatic transaxle model		RE4F03B
Automatic transaxle assembly	Model code number	3CX0D
Transaxle gear ratio	1st	2.861
	2nd	1.562
	3rd	1.000
	4th	0.697
	Reverse	2.310
	Final drive	4.072
Recommended fluid		Genuine NISSAN Matic D ATF (Continental U.S. and Alaska) or Canada NISSAN Automatic Transmission Fluid*
Fluid capacity [ℓ (US qt, Imp qt)]		7.9 (8-3/8, 7)

*: Refer to MA-10.

Vehicle Speed at Which Gear Shifting Occurs

INFOID:0000000001703397

Throttle position	Vehicle speed km/h (MPH)					
	$D_1 \rightarrow D_2$	$D_2 \rightarrow D_3$	$D_3 \rightarrow D_4$	$D_4 \rightarrow D_3$	$D_3 \rightarrow D_2$	$D_2 \rightarrow D_1$
Full throttle	51 - 59 (32 - 37)	97 - 105 (60 - 65)	154 - 162 (96 - 101)	150 - 158 (93 - 98)	87 - 95 (54 - 59)	40 - 48 (25 - 30)
Half throttle	34 - 42 (21 - 26)	62 - 70 (39 - 43)	124 - 132 (77 - 82)	69 - 77 (43 - 48)	36 - 44 (22 - 27)	19 - 27 (12 - 17)

- At half throttle, the accelerator opening is 4/8 of the full opening.

Vehicle Speed at When Lock-up Occurs/Releases

INFOID:0000000001703398

Throttle position	Selector lever position	Vehicle speed km/h (MPH)	
		Lock-up ON	Lock-up OFF
2.0/8	“D” position	86 - 94 (53 - 58)	59 - 67 (37 - 42)
	“D” position (OD OFF)	86 - 94 (53 - 58)	83 - 91 (52 - 57)

Stall Speed

INFOID:0000000001703399

Stall revolution (rpm)	2,310 - 2,770

Line Pressure

INFOID:0000000001703400

Engine speed	Line pressure kPa (kg/cm^2, psi)	
	“D”, “2” and “1” positions	“R” position
Idle speed	500 (5.1, 73)	778 (7.9, 113)
Stall speed	1,173 (12.0, 170)	1,825 (18.6, 265)

Adjusting shims, Needle Bearings, Thrust Washers and Snap Rings

INFOID:0000000001703401

NOTE:

Refer to AT-238, "Location of Adjusting Shims, Needle Bearings and Thrust Washers" or AT-239, "Location of Snap Rings".

OUTER DIAMETER AND INNER DIAMETER OF NEEDLE BEARINGS

Unit: mm (in)

Location	Outer diameter	Inner diameter
A	47.0 (1.850)	32.0 (1.260)
B	35.0 (1.378)	20.1 (0.791)
C	60.0 (2.362)	42.0 (1.654)
D	60.0 (2.362)	45.0 (1.772)
E	47.0 (1.850)	30.0 (1.181)
F	42.6 (1.677)	26.1 (1.028)
G	48.0 (1.890)	33.5 (1.319)
H	55.0 (2.165)	40.5 (1.594)
I	60.0 (2.362)	40.0 (1.575)

OUTER DIAMETER AND INNER DIAMETER OF THRUST WASHERS

Unit: mm (in)

Location	Outer diameter	Inner diameter
J	72.0 (2.835)	55.5 (2.185)
K, L	82.0 (3.228)	59.0 (2.323)
M	78.5 (3.091)	62.4 (2.457)

OUTER DIAMETER AND INNER DIAMETER OF BEARING RACES AND ADJUSTING SHIMS

Unit: mm (in)

Location	Outer diameter	Inner diameter
N	48.0 (1.890)	33.0 (1.299)
O	34.3 (1.350)	26.1 (1.028)
P	68.0 (2.677)	60.0 (2.632)
Q	72.0 (2.835)	61.0 (2.402)

OUTER DIAMETER OF SNAP RINGS

Unit: mm (in)

Location	Outer diameter
1	142.0 (5.59)
2	
3	162.3 (6.39)
4	
5	
7	113.0 (4.45)
8	135.4 (5.33)
9	126.0 (4.96)

INNER DIAMETER OF SNAP RINGS

Unit: mm (in)

Location	Inner diameter
6	32.0 (1.260)
10	63.5 (2.500)

Control Valves

INFOID:0000000001703402

CONTROL VALVE SPRINGS

Unit: mm (in)

Location		spring designation	Free length (l)	Outer diameter (D)
Upper body	L14	Pilot valve spring	38.98 (1.5346)	8.9 (0.350)
	L15	1–2 accumulator valve spring	20.5 (0.807)	6.95 (0.2736)
		1–2 accumulator piston spring	55.66 (2.1913)	19.5 (0.768)
	L16	1st reducing valve spring	27.0 (1.063)	7.0 (0.276)
	L17	3–2 timing valve spring	23.0 (0.906)	6.65 (0.2618)
	L18	Overrun clutch reducing valve spring	37.5 (1.476)	7.0 (0.276)
	L19	Torque converter relief valve spring	33.3 (1.311)	9.0 (0.354)
	L20	Torque converter clutch control valve spring	53.01 (2.0870)	6.5 (0.256)
	L21	Cooler check valve spring	28.04 (1.1039)	7.15 (0.2815)
Lower body	L3	Pressure regulator valve spring	45.0 (1.772)	15.0 (0.591)
	L4	Overrun clutch control valve spring	21.7 (0.854)	7.0 (0.276)
	L5	Accumulator control valve spring	22.0 (0.866)	6.5 (0.256)
	L6	Shift valve A spring	21.7 (0.854)	7.0 (0.276)
	L7	Shuttle valve spring	51.0 (2.008)	5.65 (0.2224)
	L12	Shift valve B spring	21.7 (0.854)	7.0 (0.276)
	L13	Pressure modifier valve spring	32.0 (1.260)	6.9 (0.272)
		Pressure modifier piston spring	30.5 (1.201)	9.8 (0.386)
	—	Line pressure relief valve spring	17.02 (0.6701)	8.0 (0.315)
	—	Torque converter pressure holding spring	9.0 (0.354)	7.3 (0.287)

Accumulator

INFOID:0000000001703403

RETURN SPRINGS

Unit: mm (in)

Location	Free length (L_1)
Servo release accumulator	62.8 (2.472)

Unit: mm (in)

Location	Length (L_2)
N-D accumulator	46.5 (1.831)

O-RINGS

Unit: mm (in)

Location	Inner diameter (Small)	Inner diameter (Large)
Servo release accumulator	26.9 (1.059)	44.2 (1.740)
N-D accumulator	34.6 (1.362)	39.4 (1.551)

Clutches and Brakes

INFOID:0000000001703404

REVERSE CLUTCH

Number of drive plates		2
Number of driven plates		2
Drive plate thickness [mm (in)]	Standard	2.0 (0.079)
	Allowable limit	1.8 (0.071)

Driven plate thickness [mm (in)]	Standard	2.0 (0.079)
Clearance [mm (in)]	Standard	0.5 - 0.8 (0.020 - 0.031)
	Allowable limit	1.2 (0.047)

HIGH CLUTCH

Number of drive plates		4	
Number of driven plates		7 (1*1 + 6*2)	
Drive plate thickness [mm (in)]	Standard	1.6 (0.063)	
	Allowable limit	1.4 (0.055)	
Driven plate thickness [mm (in)]	Standard	*1	*2
		2.0 (0.079)	1.5 (0.059)
Clearance [mm (in)]	Standard	1.4 - 1.8 (0.055 - 0.071)	
	Allowable limit	2.6 (0.102)	

FORWARD CLUTCH

Number of drive plates		5
Number of driven plates		5
Drive plate thickness [mm (in)]	Standard	1.8 (0.071)
	Allowable limit	1.6 (0.063)
Driven plate thickness [mm (in)]	Standard	2.0 (0.079)
Clearance [mm (in)]	Standard	0.45 - 0.85 (0.0177 - 0.0335)
	Allowable limit	1.85 (0.0728)

OVERRUN CLUTCH

Number of drive plates		3
Number of driven plates		4
Drive plate thickness [mm (in)]	Standard	1.6 (0.063)
	Allowable limit	1.4 (0.055)
Driven plate thickness [mm (in)]	Standard	2.0 (0.079)
Clearance [mm (in)]	Standard	1.0 - 1.4 (0.039 - 0.055)
	Allowable limit	2.0 (0.079)

LOW & REVERSE BRAKE

Number of drive plates		5
Number of driven plates		5
Drive plate thickness [mm (in)]	Standard	2.0 (0.079)
	Allowable limit	1.8 (0.071)
Driven plate thickness [mm (in)]	Standard	2.0 (0.079)
Clearance [mm (in)]	Standard	1.4 - 1.8 (0.055 - 0.071)
	Allowable limit	2.8 (0.110)

BRAKE BAND

Anchor end pin tightening torque [N·m (kg-m, in-lb)]	4.9 (0.50, 43)
Number of returning revolutions for anchor end pin	2.5
Lock nut tightening torque [N·m (kg-m, ft-lb)]	33.9 (3.5, 25)

Final Drive

INFOID:0000000001703405

DIFFERENTIAL SIDE GEAR CLEARANCE

Clearance between side gear and differential case with washer [mm (in)]	0.1 - 0.2 (0.004 - 0.008)

BEARING PRELOAD

Differential side bearing preload mm (in)	0.05 - 0.09 (0.0020 - 0.0035)

TURNING TORQUE

Turning torque of final drive assembly N-m (kg-cm, in-lb)	0.68 - 1.26 (7.0 - 13.0, 6.0 - 11.0)

Planetary Carrier

INFOID:0000000001703406

Clearance between planetary carrier and pinion washer [mm (in)]	Standard	0.15 - 0.70 (0.0059 - 0.0276)
	Allowable limit	0.80 (0.0315)

Oil Pump

INFOID:0000000001703407

Oil pump side clearance		0.02 - 0.04 (0.0008 - 0.0016)
Clearance between oil pump housing and outer gear [mm (in)]	Standard	0.08 - 0.15 (0.0031 - 0.0059)
	Allowable limit	0.15 (0.0059)
Oil pump cover seal ring clearance [mm (in)]	Standard	0.10 - 0.25 (0.0039 - 0.0098)
	Allowable limit	0.25 (0.0098)

Input Shaft

INFOID:0000000001703408

SEAL RING CLEARANCE

Input shaft seal ring clearance [mm (in)]	Standard	0.08 - 0.23 (0.0031 - 0.0091)
	Allowable limit	0.23 (0.091)

SEAL RING

Unit: mm (in)

Outer diameter	Inner diameter	Width
24 (0.94)	20.4 (0.803)	1.97 (0.0776)

Reduction Pinion Gear

INFOID:0000000001703409

TURNING TORQUE

Turning torque of reduction pinion gear [N·m (kg-m, in-lb)]	0.11 - 0.69 (0.01 - 0.07, 1 - 6)

Band Servo

INFOID:0000000001703410

RETURN SPRINGS

Unit: mm (in)

Return spring	Free length
2nd servo return spring	32.5 (1.280)
OD servo return spring	38.52 (1.5165)

Output Shaft

INFOID:0000000001703411

SEAL RING CLEARANCE

Output shaft seal ring clearance [mm (in)]	Standard	0.10 - 0.25 (0.0039 - 0.0098)
	Allowable limit	0.25 (0.0098)

SEAL RING

Unit: mm (in)

Outer diameter	Inner diameter	Width
29.5 (1.161)	26.2 (1.031)	1.95 (0.0768)

END PLAY

Output shaft end play mm (in)	0 - 0.5 (0 - 0.020)

Bearing Retainer

INFOID:0000000001703412

SEAL RING CLEARANCE

Bearing retainer seal ring clearance [mm (in)]	Standard	0.10 - 0.27 (0.0039 - 0.0106)
	Allowable limit	0.27 (0.0106)

Total End Play

INFOID:0000000001703413

Total end play [mm (in)]	0.25 - 0.55 (0.0098 - 0.0217)

Reverse Clutch End Play

INFOID:0000000001703414

Reverse clutch end play [mm (in)]	0.65 - 1.0 (0.0256 - 0.039)

Removal and Installation

INFOID:0000000001703415

Distance between end of converter housing and torque converter [mm (in)]	14.4 (0.567)

Shift Solenoid Valves

INFOID:0000000001703416

Gear position	1	2	3	4
Shift solenoid valve A	ON (Closed)	OFF (Open)	OFF (Open)	ON (Closed)
Shift solenoid valve B	ON (Closed)	ON (Closed)	OFF (Open)	OFF (Open)

Solenoid Valves

INFOID:0000000001703417

Solenoid valve designation	Resistance (Approx.)	Terminal
Shift solenoid valve A	20 - 30 Ω	2
Shift solenoid valve B	5 - 20 Ω	1
Overrun clutch solenoid valve	20 - 30 Ω	3
Line pressure solenoid valve	2.5 - 5.0 Ω	4
Torque converter clutch solenoid valve	5 - 20 Ω	5

A/T Fluid Temperature Sensor

INFOID:0000000001703418

Remarks: Specification data are reference values.

Condition	Specification (Approx.)	
Cold [20°C (68°F)] ↓ Hot [80°C (176°F)]	1.5V ↓ 0.5V	2.5 kΩ ↓ 0.3 kΩ

Revolution Sensor

INFOID:0000000001703419

Condition	Judgment standard
When driving at 20 km/h (12 MPH)	150 Hz (Approx.)

Dropping Resistor

INFOID:0000000001703420

Resistance	12Ω (Approx.)

Turbine Revolution Sensor (Power Train Revolution Sensor)

INFOID:0000000001703421

Condition	Judgment standard
When driving at 20 km/h (12 MPH)	360 Hz (Approx.)

SECTION AV

AUDIO, VISUAL, NAVIGATION & TELEPHONE SYSTEM

CONTENTS

SERVICE INFORMATION 2

PRECAUTIONS 2
Precaution for Supplemental Restraint System (SRS) "AIR BAG" and "SEAT BELT PRE-TENSIONER" 2

PREPARATION 3
Commercial Service Tool 3

AUDIO 4
Component Parts Location 4
System Description 4
Schematic 6
Wiring Diagram - AUDIO - 8
Audio Unit (Base System) Harness Connector Terminal Layout 15
Terminal and Reference Value for Audio Unit (Base System) 15
Audio Unit (Mid Level and Premium System) Harness Connector Terminal Layout 16
Terminal and Reference Value for Audio Unit (Mid Level and Premium System) 16
Subwoofer Harness Connector Terminal Layout (Premium Audio System) 19
Terminal and Reference Value for Subwoofer (Premium Audio System) 19
Satellite Radio Tuner Harness Connector Terminal Layout 19
Terminal and Reference Value for Satellite Radio Tuner 20
Trouble Diagnosis 20
Noise Inspection 21
Power Supply Circuit Inspection 22
Satellite Radio Tuner (Factory Installed) Power and Ground Supply Circuit Inspection 23
Satellite Radio Tuner (Factory Installed) Communication Circuit Inspection 24
Satellite Radio Tuner (Factory Installed) Left Channel Audio Signal Circuit Inspection 26
Satellite Radio Tuner (Factory Installed) Right Channel Audio Signal Circuit Inspection 26
Steering Switch Check (With Bluetooth) 27
Sound Is Not Heard from Front Door Speaker (Base System) 29
Sound Is Not Heard from Rear Door Speaker (Base System) 30
Sound Is Not Heard from Front Door Speaker or Tweeter (Mid Level and Premium System) 31
Sound Is Not Heard from Rear Door Speaker (Mid Level and Premium System) 32
Sound Is Not Heard from Subwoofer (Premium System) 34
Removal and Installation 36

AUDIO ANTENNA 41
Location of Antenna 41
Removal and Installation of Roof Antenna 41

TELEPHONE 43
Component Parts and Harness Connector Location 43
System Description 43
Wiring Diagram - H/PHON - 45
Bluetooth Control Unit Harness Connector Terminal Layout 47
Terminal and Reference Value for Bluetooth Control Unit 47
Bluetooth Control Unit Self-Diagnosis Function 48
Workflow 49
Power Supply and Ground Circuit Inspection for Bluetooth Control Unit 49
Basic Inspection of Hands-Free Phone 50
Steering Wheel Audio Control Switch Does Not Operate 51
Voice Activated Control Function Does Not Operate 52
Removal and Installation 54

SERVICE INFORMATION

PRECAUTIONS

Precaution for Supplemental Restraint System (SRS) "AIR BAG" and "SEAT BELT PRE-TENSIONER"

INFOID:0000000001704647

The Supplemental Restraint System such as “AIR BAG” and “SEAT BELT PRE-TENSIONER”, used along with a front seat belt, helps to reduce the risk or severity of injury to the driver and front passenger for certain types of collision. This system includes seat belt switch inputs and dual stage front air bag modules. The SRS system uses the seat belt switches to determine the front air bag deployment, and may only deploy one front air bag, depending on the severity of a collision and whether the front occupants are belted or unbelted.
Information necessary to service the system safely is included in the SR and SB section of this Service Manual.

WARNING:

- **To avoid rendering the SRS inoperative, which could increase the risk of personal injury or death in the event of a collision which would result in air bag inflation, all maintenance must be performed by an authorized NISSAN/INFINITI dealer.**
- **Improper maintenance, including incorrect removal and installation of the SRS, can lead to personal injury caused by unintentional activation of the system. For removal of Spiral Cable and Air Bag Module, see the SR section.**
- **Do not use electrical test equipment on any circuit related to the SRS unless instructed to in this Service Manual. SRS wiring harnesses can be identified by yellow and/or orange harnesses or harness connectors.**

PREPARATION

Commercial Service Tool

INFOID:0000000001704648

Tool name	Description
Power tool 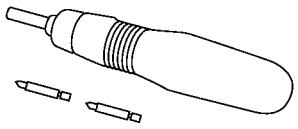 PBIC0191E	Loosening bolts and nuts

AUDIO

Component Parts Location

INFOID:0000000001704649

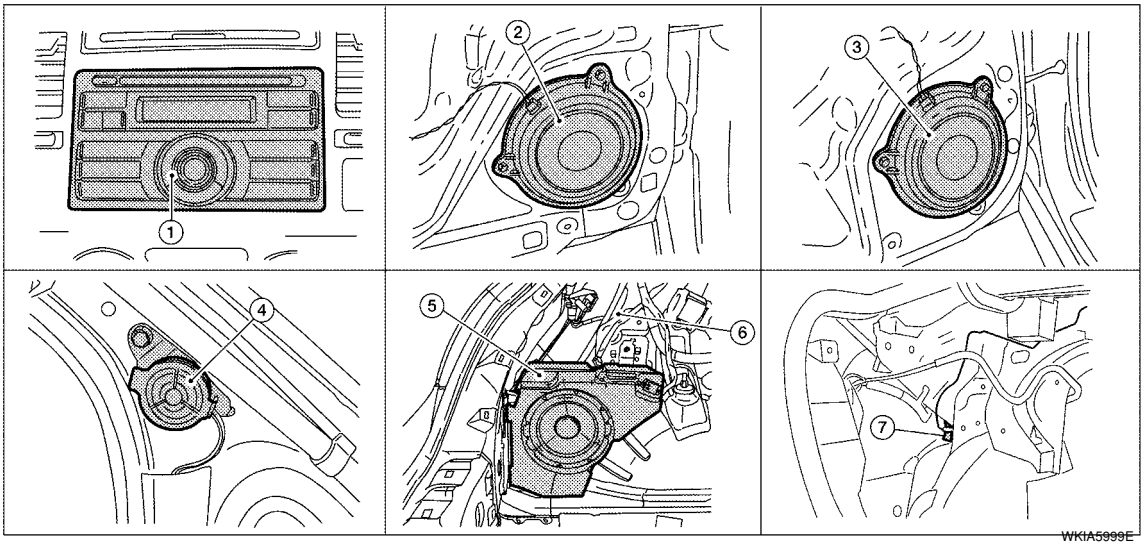

1. Audio unit M43, M44, M45
2. Front door speaker LH D12, RH D112
3. Rear door speaker LH D207, RH D307
4. Tweeter LH M46, RH M47 (view with front pillar garnish removed)
5. Subwoofer B29 (premium system) [view with luggage side lower finisher (LH) removed]
6. Satellite radio tuner B30, B31 (hatchback - if equipped) [view with luggage side lower finisher (LH) removed]
7. Satellite radio tuner B30, B31 (sedan - if equipped) (view with trunk side finisher LH removed)

System Description

INFOID:0000000001704650

BASE SYSTEM

Refer to Owner's Manual for audio system operating instructions.
Power is supplied at all times
- through 20A fuse (No. 27, located in the fuse and fusible link box)
- to audio unit terminal 19.

With the ignition switch in the ACC or ON position, power is supplied
- through 10A fuse (No. 20, located in the fuse and fusible link box)
- to audio unit terminal 7.

Ground is supplied through the case of the audio unit.
Then audio signals are supplied
- through audio unit terminals 2, 3, 4, 5, 11, 12, 13 and 14
- to terminals + and - of front door speaker LH and RH and
- to terminals + and - of rear door speaker LH and RH.

MID LEVEL AND PREMIUM SYSTEM

Refer to Owner's Manual for audio system operating instructions.
Power is supplied at all times
- through 20A fuse (No. 27, located in the fuse and fusible link box)
- to audio unit terminal 19 and
- to subwoofer terminal 1 (with premium system).

With the ignition switch in the ACC or ON position, power is supplied
- through 10A fuse (No. 20, located in the fuse and fusible link box)
- to audio unit terminal 7.

Ground is supplied through the case of the audio unit.
Ground is also supplied

- to audio unit terminal 21 (with premium system)
- through body grounds M57 and M61 and
- to subwoofer terminal 3 (with premium system)
- through body grounds B7 and B19.

Then audio signals are supplied

- through audio unit terminals 2, 3, 4, 5, 11, 12, 13, and 14
- to terminals + and - of front door speaker LH and RH and
- to terminals + and - of tweeter LH and RH and
- to terminals + and - of rear door speaker LH and RH and
- to terminals 2 and 6 of subwoofer (with premium system).

Steering Wheel Audio Control Switches (with Bluetooth)

When one of steering wheel audio control switches is pushed, the resistance in steering switch circuit changes depending on which button is pushed.

Satellite Radio Tuner (Pre-wiring)

The satellite radio tuner pre-wiring allows connection of a satellite radio tuner.

Power is supplied at all times

- through 20A fuse (No. 27, located in the fuse and fusible link box)
- to satellite radio tuner pre-wiring terminal 32.

With the ignition switch in the ACC or ON position, power is supplied

- through 10A fuse (No. 20, located in the fuse and fusible link box)
- to satellite radio tuner pre-wiring terminal 36.

Then audio signals are supplied

- through satellite radio tuner pre-wiring terminals 21, 22, 23 and 24
- to audio unit terminals 41, 42, 43 and 44.

Satellite Radio Tuner (Factory Installed)

Power is supplied at all times

- through 20A fuse (No. 27, located in the fuse and fusible link box)
- to satellite radio tuner terminal 32.

With the ignition switch in the ACC or ON position, power is supplied

- through 10A fuse (No. 20, located in the fuse and fusible link box)
- to satellite radio tuner terminal 36.

Ground is supplied through the case of the satellite radio tuner.

Then audio signals are supplied

- through satellite radio tuner terminals 21, 22, 23 and 24
- to audio unit terminals 41, 42, 43 and 44.

Ground is supplied through the case of the satellite radio tuner.

SPEED SENSITIVE VOLUME SYSTEM (MID LEVEL AND PREMIUM SYSTEM)

Volume level of this system goes up and down automatically in proportion to the vehicle speed. The control level can be selected by the customer. Refer to Owner's Manual for operating instructions.

Schematic

INFOID:0000000001704651

MID LEVEL SYSTEM

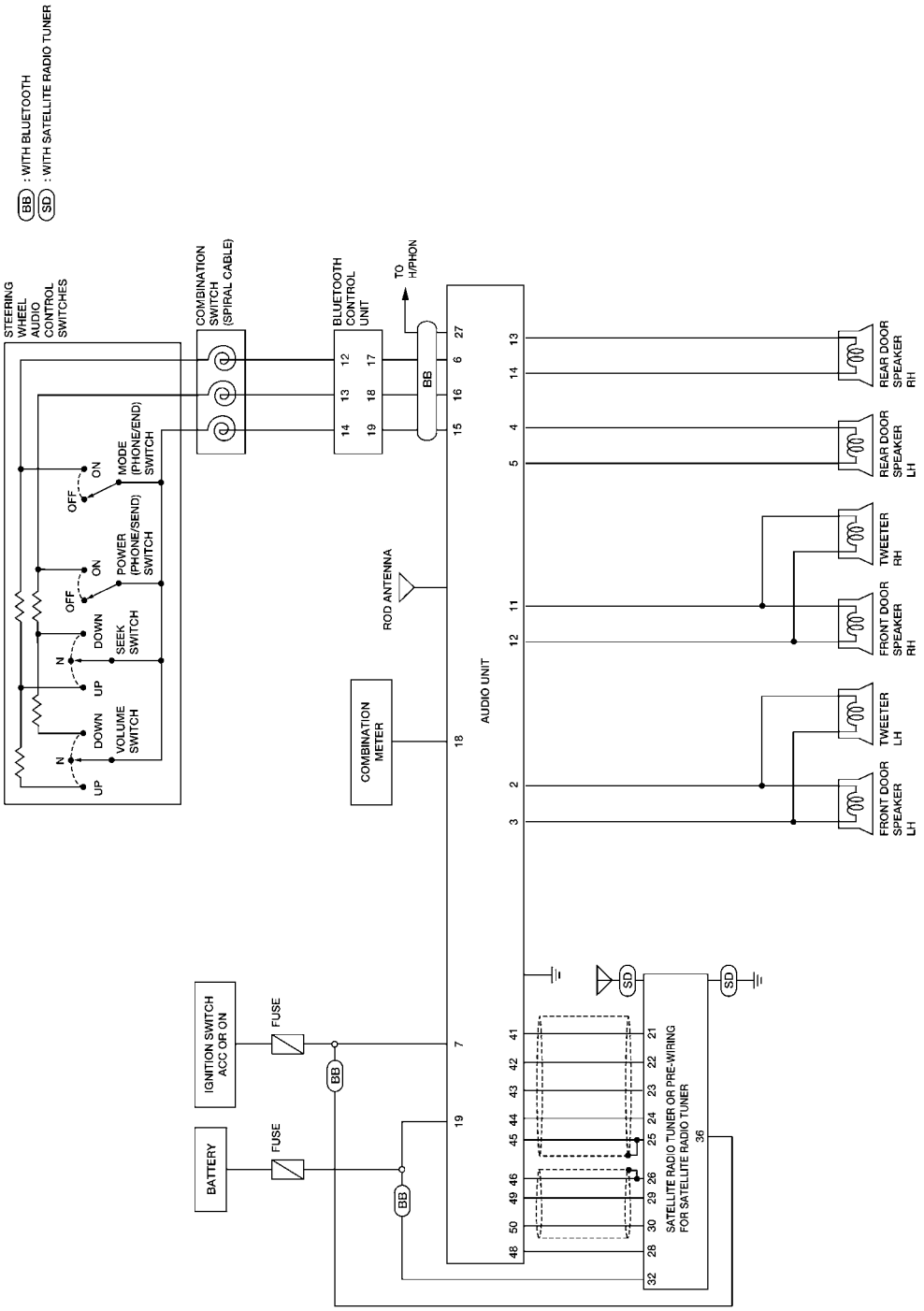

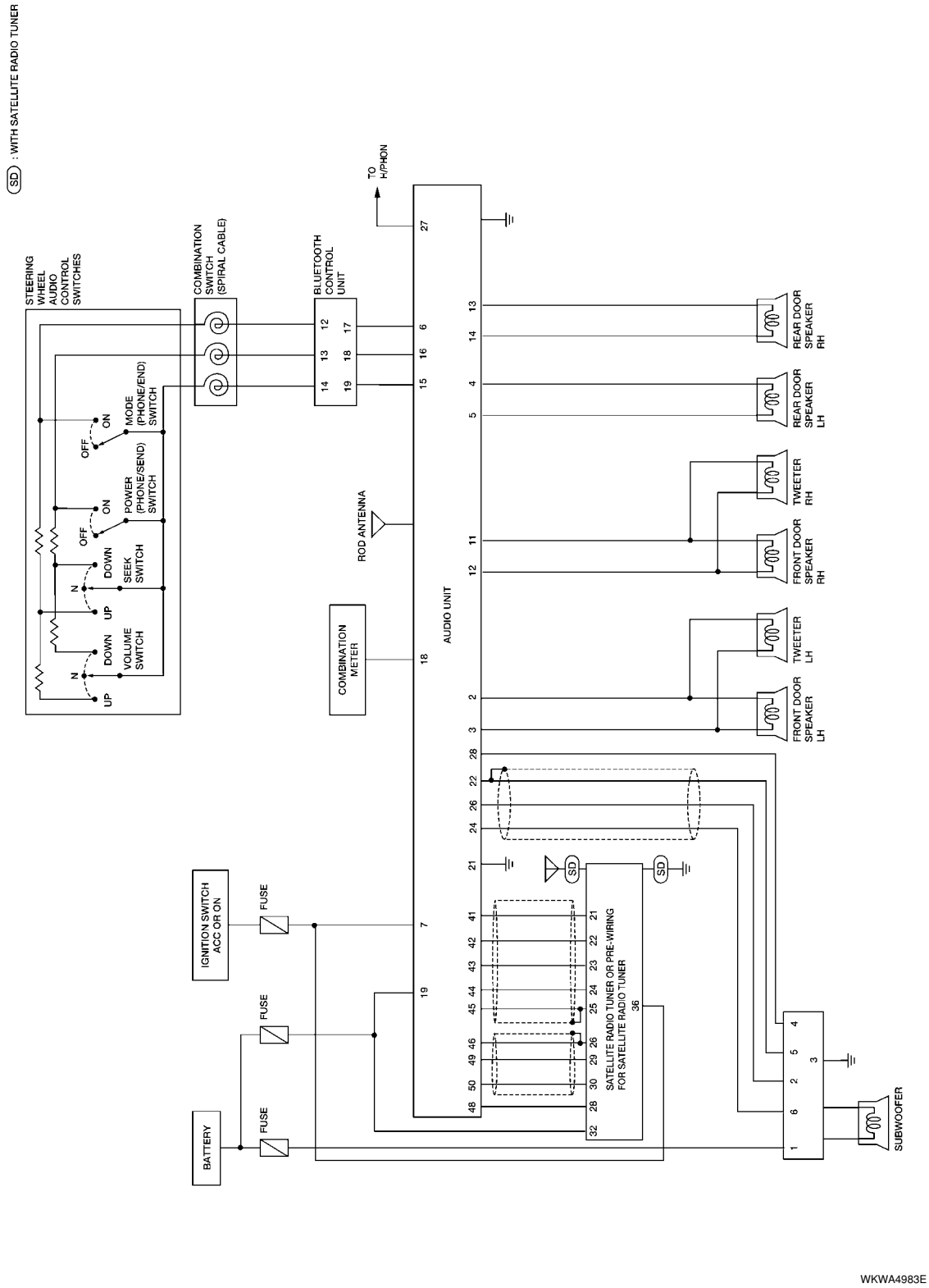
SD : WITH SATELLITE RADIO TUNER
STEERING WHEEL AUDIO CONTROL SWITCHES
COMBINATION SWITCH (SPIRAL CABLE)
BLUETOOTH CONTROL UNIT
TO H/PHON
MODE (PHONE/END) SWITCH
POWER (PHONE/SEND) SWITCH
SEEK SWITCH
VOLUME SWITCH
ON
OFF
DOWN
UP
N
ROD ANTENNA
COMBINATION METER
AUDIO UNIT
REAR DOOR SPEAKER RH
REAR DOOR SPEAKER LH
TWEETER RH
FRONT DOOR SPEAKER RH
TWEETER LH
FRONT DOOR SPEAKER LH
IGNITION SWITCH ACC OR ON
FUSE
BATTERY
SATELLITE RADIO TUNER OR PRE-WIRING FOR SATELLITE RADIO TUNER
SD
SUBWOOFER
WKWA4983E

Wiring Diagram - AUDIO -

INFOID:0000000001704652

BASE SYSTEM

AV-AUDIO-01

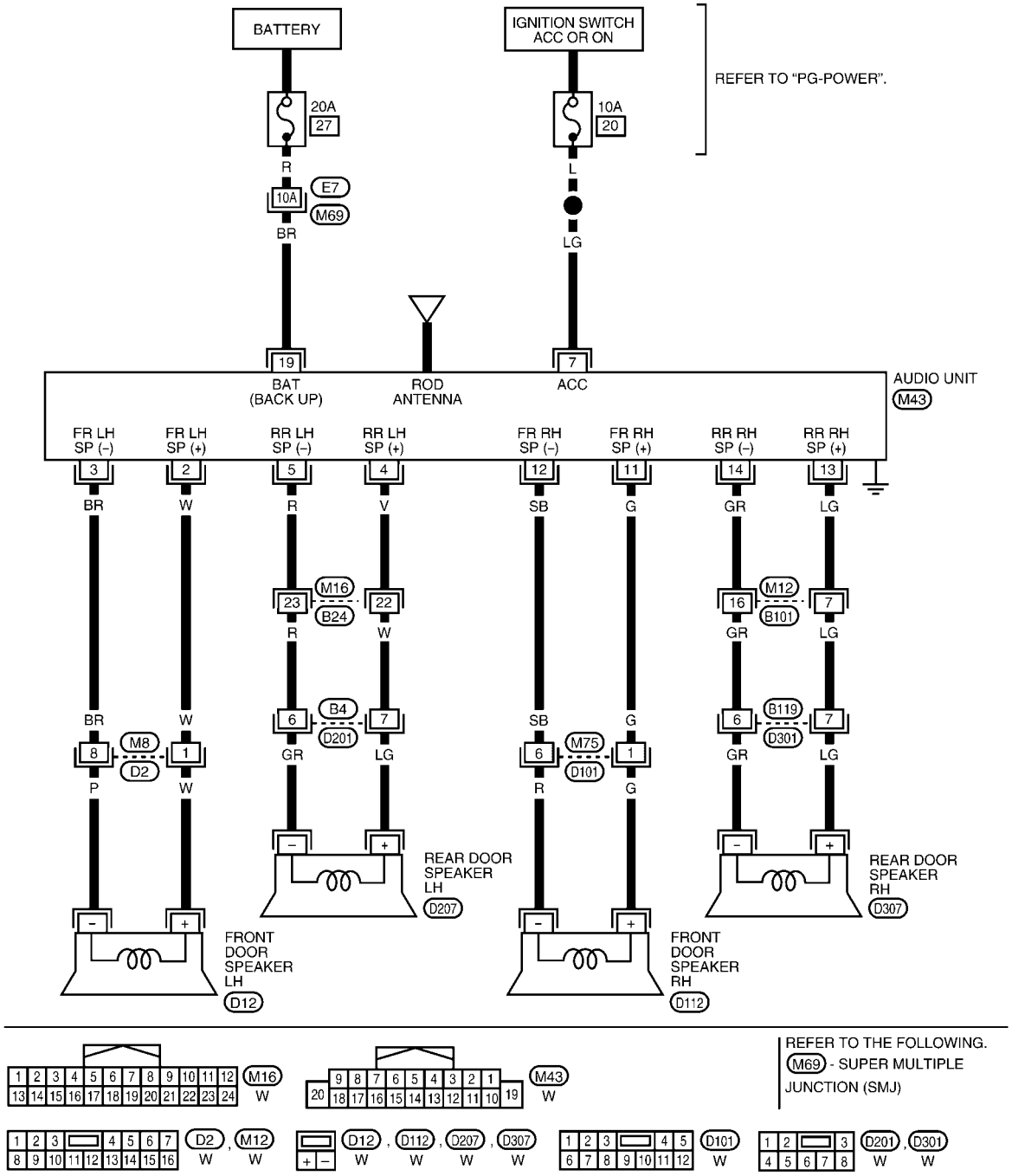

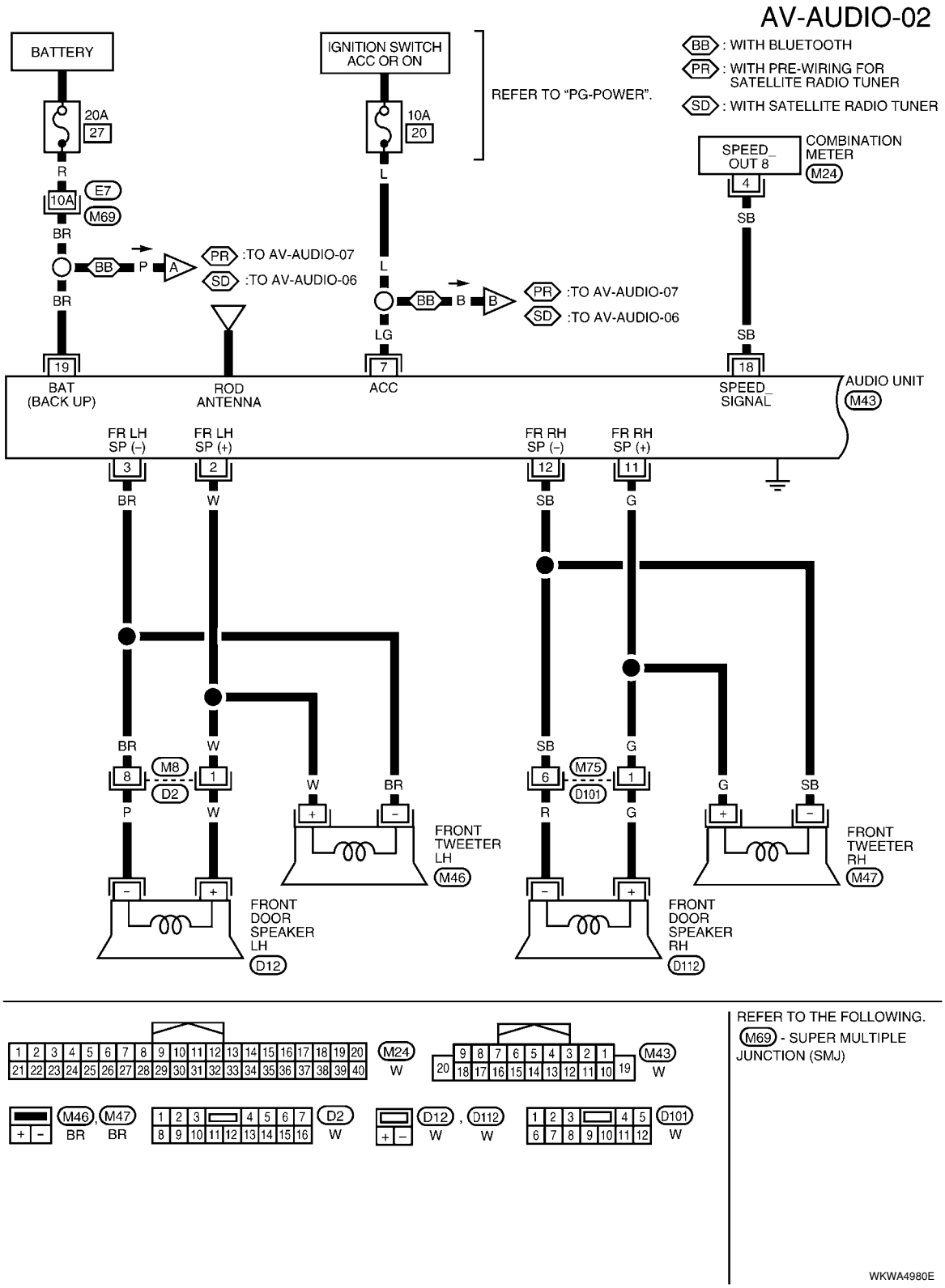
AV-AUDIO-02
BATTERY
20A
27
R
10A
E7
M69
BR
BB
P
A
PR :TO AV-AUDIO-07
SD :TO AV-AUDIO-06
BR
19
BAT
(BACK UP)
ROD
ANTENNA
IGNITION SWITCH
ACC OR ON
10A
20
L
REFER TO "PG-POWER".
L
BB
B
B
PR :TO AV-AUDIO-07
SD :TO AV-AUDIO-06
LG
7
ACC
BB : WITH BLUETOOTH
PR : WITH PRE-WIRING FOR SATELLITE RADIO TUNER
SD : WITH SATELLITE RADIO TUNER
SPEED_ OUT 8
COMBINATION METER
M24
4
SB
SB
18
SPEED_ SIGNAL
AUDIO UNIT
M43
FR LH SP (–)
FR LH SP (+)
FR RH SP (–)
FR RH SP (+)
3
2
12
11
BR
W
SB
G
BR
W
8
M8
D2
1
P
W
W
BR
FRONT TWEETER LH
M46
FRONT DOOR SPEAKER LH
D12
SB
G
6
M75
D101
1
R
G
G
SB
FRONT TWEETER RH
M47
FRONT DOOR SPEAKER RH
D112
M24
W
M43
W
M46
BR
M47
BR
D2
W
D12
W
D112
W
D101
W
REFER TO THE FOLLOWING.
M69 - SUPER MULTIPLE JUNCTION (SMJ)
WKWA4980E

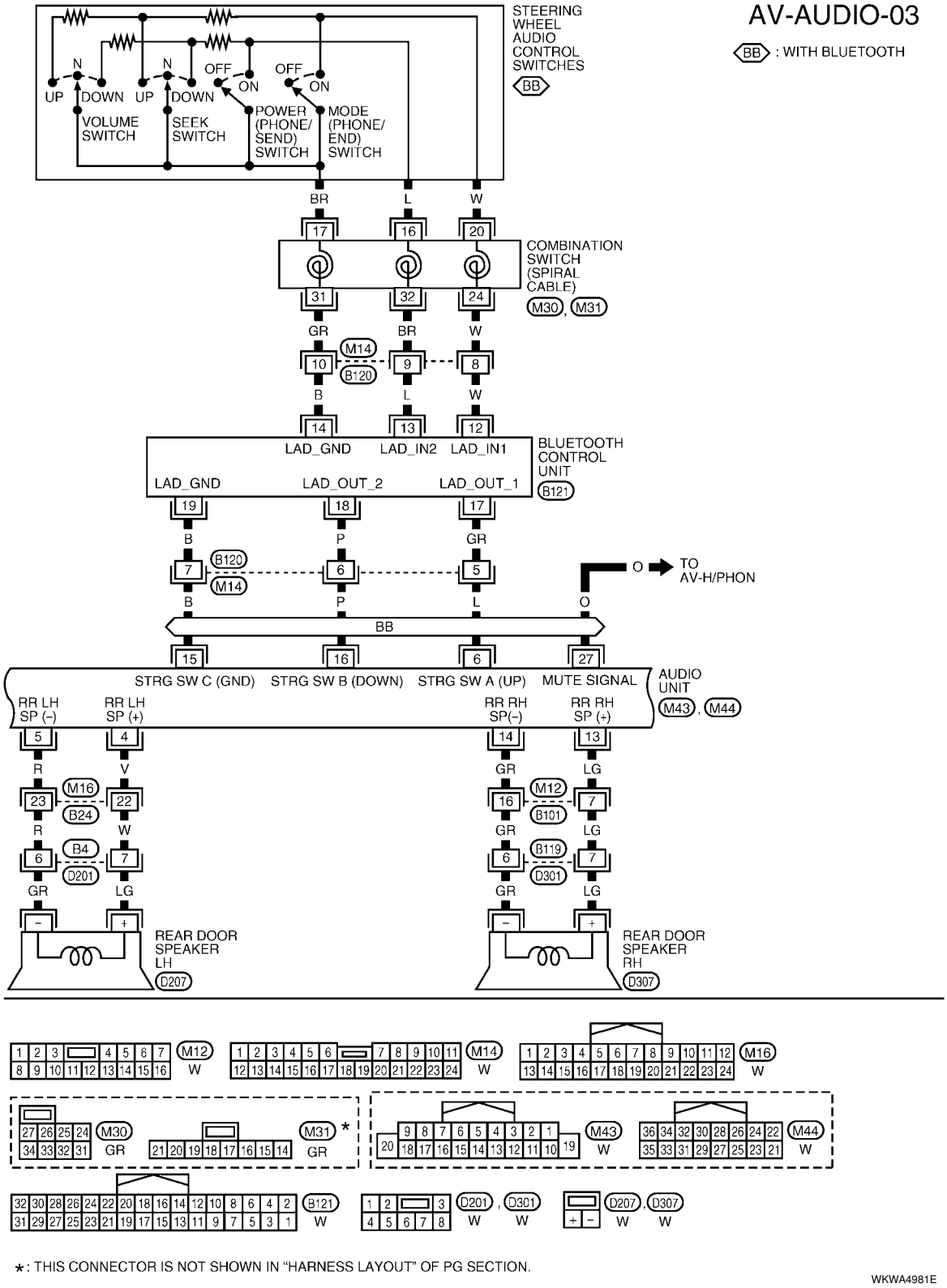
AV-AUDIO-03
BB : WITH BLUETOOTH
STEERING WHEEL AUDIO CONTROL SWITCHES
BB
N
UP
DOWN
VOLUME SWITCH
SEEK SWITCH
OFF
ON
POWER (PHONE/ SEND) SWITCH
MODE (PHONE/ END) SWITCH
BR
L
W
COMBINATION SWITCH (SPIRAL CABLE)
M30, M31
GR
M14
B120
B
BLUETOOTH CONTROL UNIT
B121
LAD_GND
LAD_IN2
LAD_IN1
LAD_OUT_2
LAD_OUT_1
P
O
TO AV-H/PHON
BB
STRG SW C (GND)
STRG SW B (DOWN)
STRG SW A (UP)
MUTE SIGNAL
AUDIO UNIT
M43, M44
RR LH SP (–)
RR LH SP (+)
RR RH SP(–)
RR RH SP (+)
R
V
LG
M16
B24
M12
B101
B4
D201
B119
D301
REAR DOOR SPEAKER LH
D207
REAR DOOR SPEAKER RH
D307
M12
M14
M16
M30
M31
M43
M44
B121
D201, D301
D207, D307
*: THIS CONNECTOR IS NOT SHOWN IN "HARNESS LAYOUT" OF PG SECTION.
WKWA4981E

AV-AUDIO-04

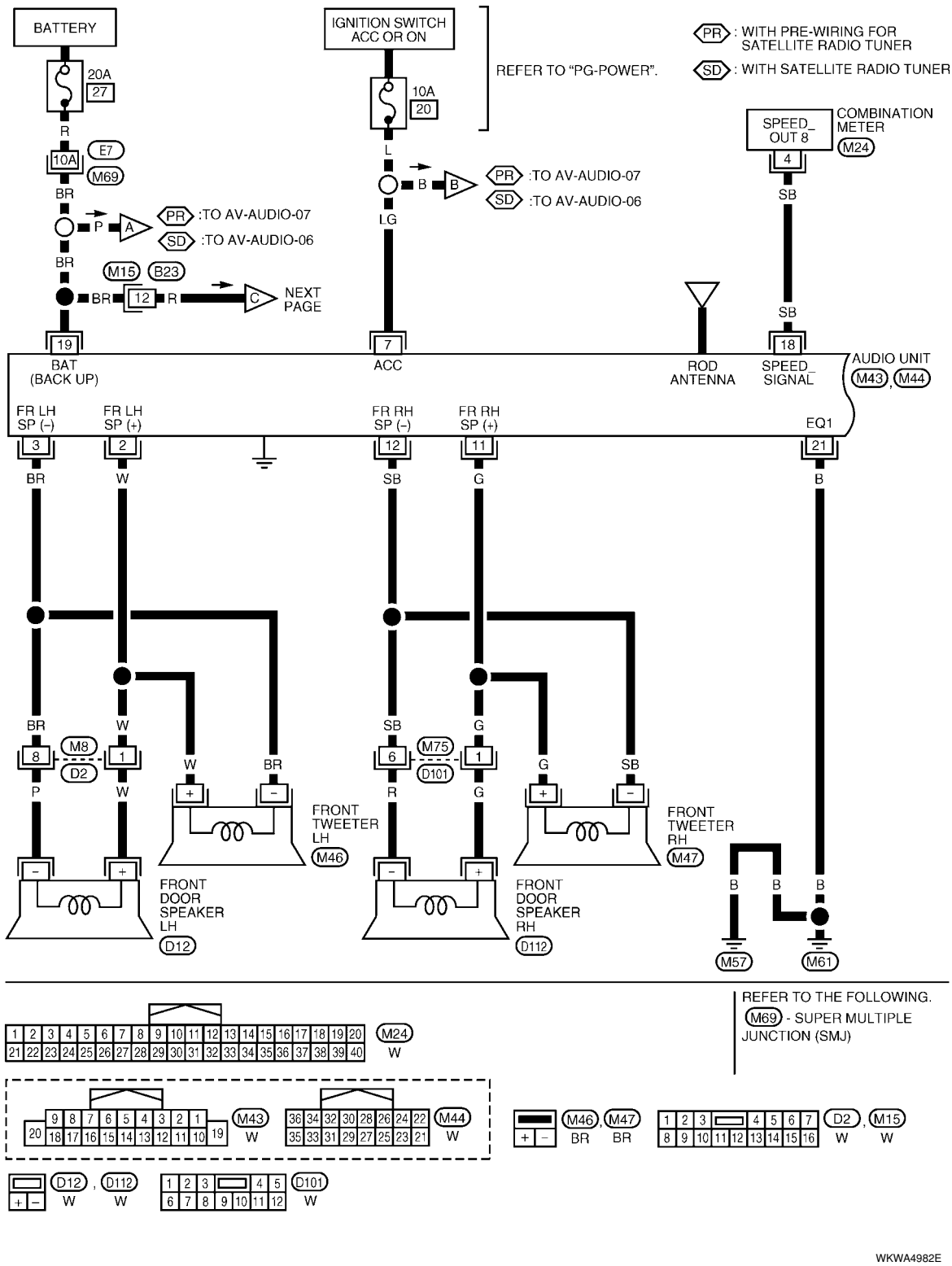
BATTERY
20A
27
R
10A
E7
M69
BR
P
A
PR :TO AV-AUDIO-07
SD :TO AV-AUDIO-06
BR
M15
B23
BR
12
R
C
NEXT PAGE
19
BAT (BACK UP)
IGNITION SWITCH ACC OR ON
10A
20
L
B
B
PR :TO AV-AUDIO-07
SD :TO AV-AUDIO-06
LG
7
ACC
REFER TO "PG-POWER".
PR : WITH PRE-WIRING FOR SATELLITE RADIO TUNER
SD : WITH SATELLITE RADIO TUNER
SPEED_ OUT 8
COMBINATION METER
M24
4
SB
SB
18
SPEED_ SIGNAL
ROD ANTENNA
AUDIO UNIT
M43, M44
FR LH SP (–)
FR LH SP (+)
FR RH SP (–)
FR RH SP (+)
EQ1
3
2
12
11
21
BR
W
SB
G
B
BR
8
M8
D2
P
W
1
W
BR
SB
6
M75
D101
R
G
1
G
SB
FRONT TWEETER LH
M46
FRONT TWEETER RH
M47
FRONT DOOR SPEAKER LH
D12
FRONT DOOR SPEAKER RH
D112
B
B
B
M57
M61
REFER TO THE FOLLOWING.
M69 - SUPER MULTIPLE JUNCTION (SMJ)
M24
W
M43
W
M44
W
M46, M47
BR BR
D2, M15
W W
D12, D112
W W
D101
W
WKWA4982E

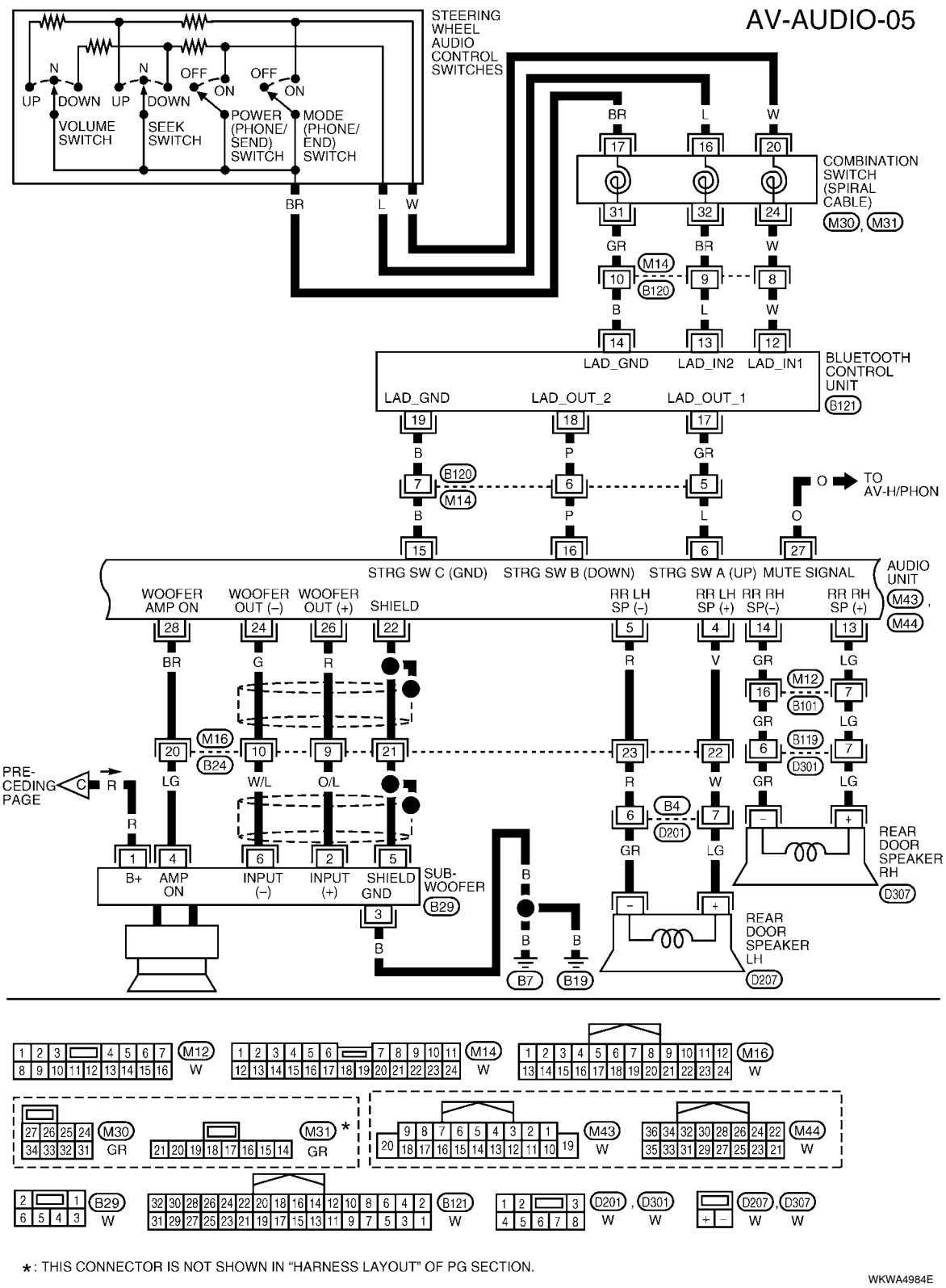
AV-AUDIO-05
STEERING WHEEL AUDIO CONTROL SWITCHES
UP
DOWN
N
VOLUME SWITCH
SEEK SWITCH
OFF
ON
POWER (PHONE/ SEND) SWITCH
MODE (PHONE/ END) SWITCH
BR
L
W
COMBINATION SWITCH (SPIRAL CABLE)
M30, M31
GR
M14
B120
B
LAD_GND
LAD_IN2
LAD_IN1
BLUETOOTH CONTROL UNIT
B121
LAD_OUT_2
LAD_OUT_1
P
O
TO AV-H/PHON
STRG SW C (GND)
STRG SW B (DOWN)
STRG SW A (UP)
MUTE SIGNAL
AUDIO UNIT
M43, M44
WOOFER AMP ON
WOOFER OUT (–)
WOOFER OUT (+)
SHIELD
RR LH SP (–)
RR LH SP (+)
RR RH SP(–)
RR RH SP (+)
G
V
LG
M12
B101
M16
B24
W/L
O/L
B119
D301
PRE-CEDING PAGE
C
B4
D201
B+
AMP ON
INPUT (–)
INPUT (+)
SHIELD GND
SUB-WOOFER
B29
REAR DOOR SPEAKER RH
D307
REAR DOOR SPEAKER LH
D207
B7
B19
M12 W
M14 W
M16 W
M30 GR
M31 * GR
M43 W
M44 W
B29 W
B121 W
D201, D301 W W
D207, D307 W W
★: THIS CONNECTOR IS NOT SHOWN IN "HARNESS LAYOUT" OF PG SECTION.
WKWA4984E

AV-AUDIO-06

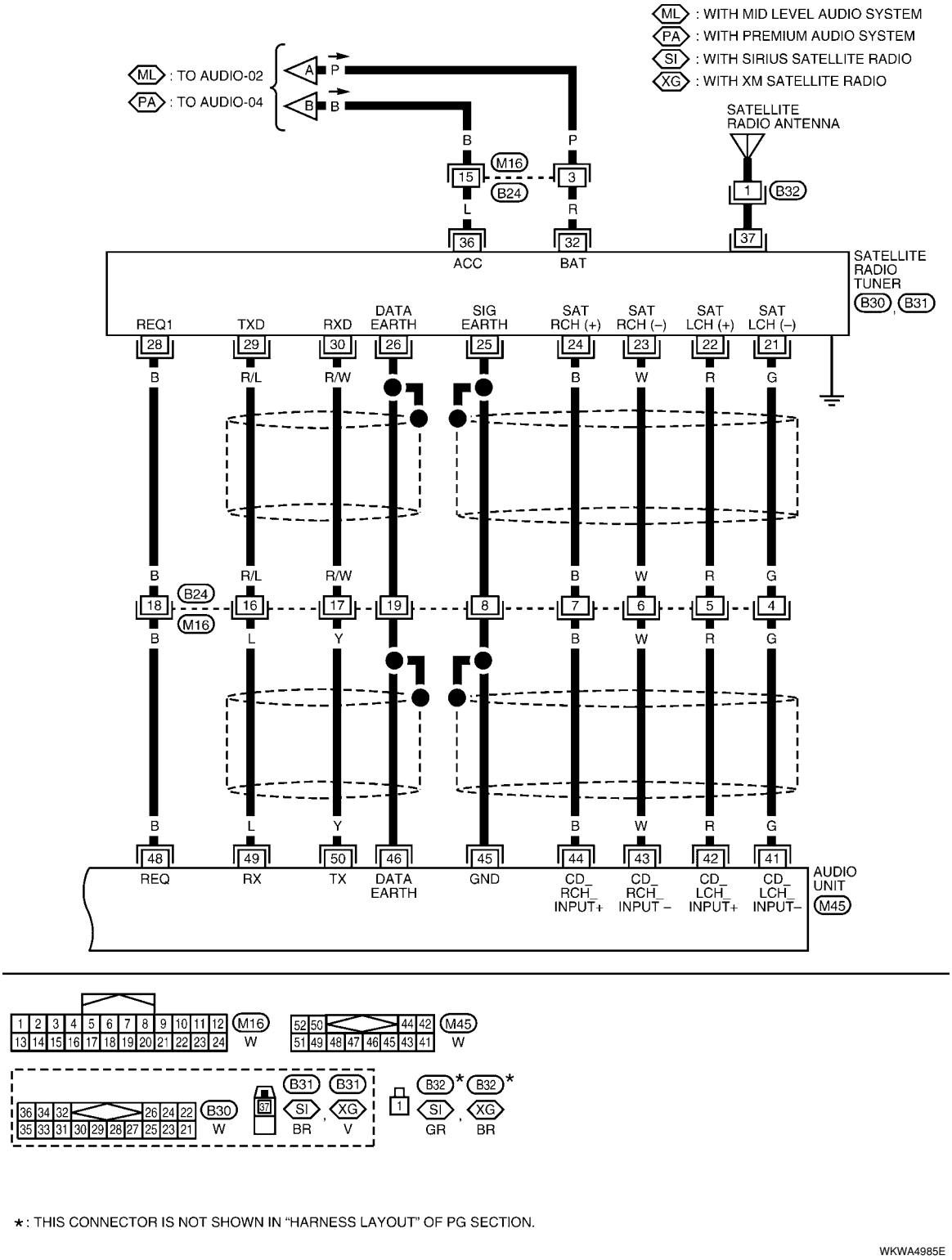

*: THIS CONNECTOR IS NOT SHOWN IN "HARNESS LAYOUT" OF PG SECTION.

AV-AUDIO-07

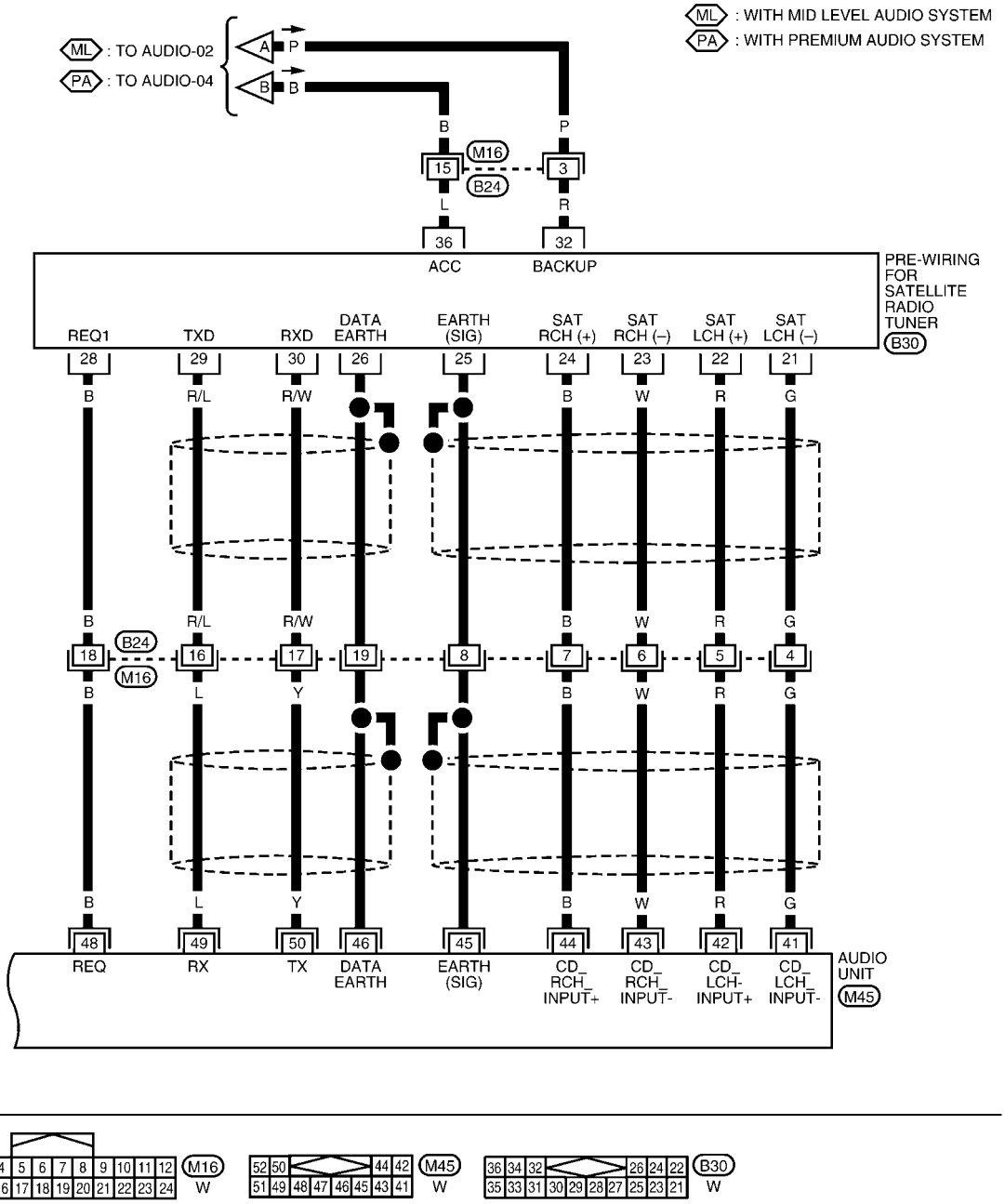

WKWA4986E

Audio Unit (Base System) Harness Connector Terminal Layout

INFOID:0000000001704653

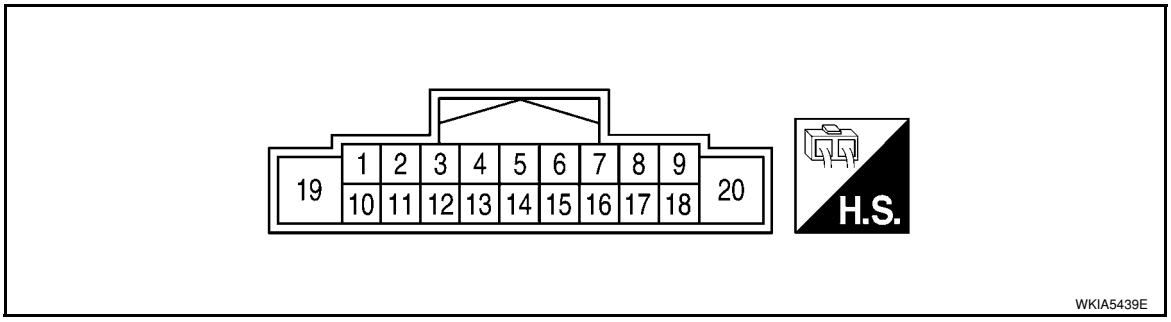

Terminal and Reference Value for Audio Unit (Base System)

INFOID:0000000001704654

Terminal (Wire color)		Item	Signal input/ output	Condition		Reference value (Approx.)
+	–			Ignition switch	Operation	
2 (W)	3 (BR)	Audio signal front LH	Output	ON	Receive audio signal	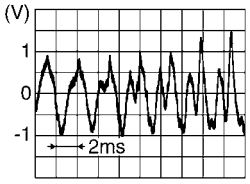 SKIB3609E
4 (V)	5 (R)	Audio signal rear LH	Output	ON	Receive audio signal	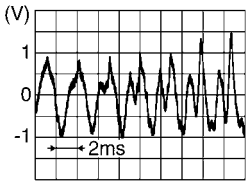 SKIB3609E
7 (LG)	Ground	ACC power supply	Input	ACC	–	Battery voltage
11 (G)	12 (SB)	Audio signal front RH	Output	ON	Receive audio signal	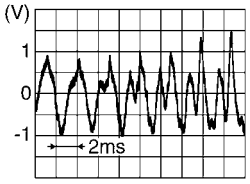 SKIB3609E
13 (LG)	14 (GR)	Audio signal rear RH	Output	ON	Receive audio signal	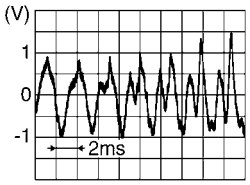 SKIB3609E
19 (BR)	Ground	Battery power supply	Input	OFF	–	Battery voltage

Audio Unit (Mid Level and Premium System) Harness Connector Terminal Layout

INFOID:0000000001704655

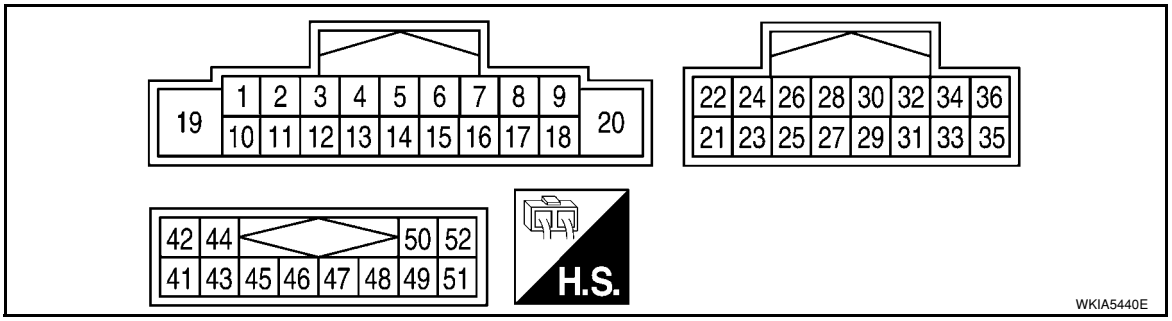

Terminal and Reference Value for Audio Unit (Mid Level and Premium System)

INFOID:0000000001704656

Terminal (Wire color) +	Terminal (Wire color) –	Item	Signal input/ output	Condition: Ignition switch	Condition: Operation	Reference value (Approx.)	Example of symptom
2 (W)	3 (BR)	Audio sound signal front LH	Output	ON	Receive audio signal	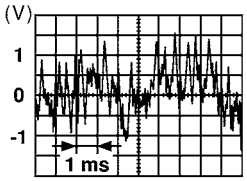 SKIA0177E	No sound from front door speaker LH or tweeter LH.
4 (V)	5 (R)	Audio sound signal rear LH	Output	ON	Receive audio signal	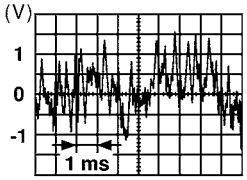 SKIA0177E	No sound from rear door speaker LH or subwoofer LH.
6 (L)*2	Ground	Remote control A	Input	ON	Press Phone/ End switch	0V	Steering wheel audio controls do not function
					Press SEEK UP switch	1.7V	
					Press VOL UP switch	3.3V	
					Except for above	5.0V	
7 (LG)	Ground	ACC signal	Input	ON	Ignition switch ACC or ON	Battery voltage	System does not work properly.
11 (G)	12 (SB)	Audio sound signal front RH	Output	ON	Receive audio signal	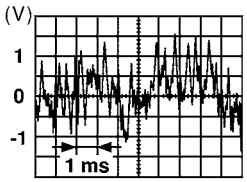 SKIA0177E	No sound from front door speaker RH or tweeter RH.

Terminal (Wire color) +	Terminal (Wire color) –	Item	Signal input/ output	Condition: Ignition switch	Condition: Operation	Reference value (Approx.)	Example of symptom
13 (LG)	14 (GR)	Audio sound signal rear RH	Output	ON	Receive audio signal	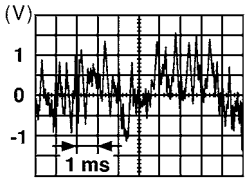 SKIA0177E	No sound from rear door speaker RH or subwoofer RH.
15 (B)*2	–	Remote control ground	Input	–	–	–	Steering wheel audio controls do not function
16 (P)*2	Ground	Remote control B	Input	ON	Press Phone/ Send switch	0V	Steering wheel audio controls do not function
					Press SEEK DOWN switch	1.7V	
					Press VOL DOWN switch	3.3V	
					Except for above	5.0V	
18 (SB)	Ground	Vehicle speed signal (8–pulse)	Input	ON	When vehicle speed is approx. 40 km/h (25 MPH)	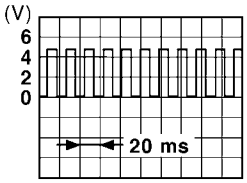 PKIC0643E	Speed sensitive volume is inoperative.
19 (BR)	Ground	Battery power	Input	–	–	Battery voltage	Subwoofer will not work properly.
21 (B)*2	Ground	EQ selection	–	ON	–	0V (with mid level) 12V (with premium)	Wrong EQ will cause sub woofer to be inoperative
22*1	–	Shield	–	–	–	–	–
26 (R)*1	24 (G)	Audio signal subwoofer	Input	–	–	Audio signal	Subwoofer will not work properly.
28 (BR)*1	Ground	Subwoofer amp. ON signal	Output	ON	–	12V	Subwoofer will not work properly.
27 (O)*2	–	Bluetooth ON	Output	ON	Audio unit sends power signal to Bluetooth control unit	–	Mute inoperative
31 (LG)*2	33 (V)*2	Audio out	Output	ACC/ ON	Audio unit receives audio signal from Bluetooth control unit	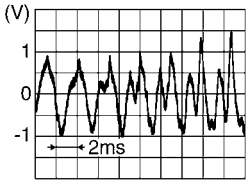 SKIB3609E	Bluetooth can not be heard.
35*2	–	Shield	–	–	–	–	–

Terminal (Wire color)		Item	Signal input/ output	Condition		Reference value (Approx.)	Example of symptom
+	–			Ignition switch	Operation		
42 (R)	41 (G)	Audio left channel sound signal from satellite radio tuner	Input	ON	Receive audio signal	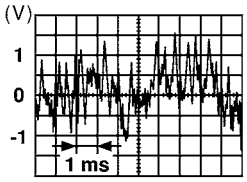 SKIA0177E	No sound from satellite radio tuner left channel.
44 (B)	43 (W)	Audio right channel sound signal from satellite radio tuner	Input	ON	Receive audio signal	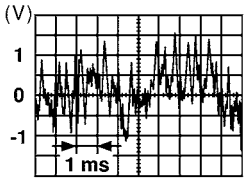 SKIA0177E	No sound from satellite radio tuner right channel.
45	–	Shield ground (audio signal)	–	–	–	0V	–
46	–	Shield ground (data)	–	–	–	0V	–
48 (B)	Ground	Satellite radio tuner request to audio unit	Input	ON	Turn audio unit ON	5V	Satellite radio tuner does not operate properly.
49 (L)	Ground	Audio RX	Input	ON	Operate audio volume	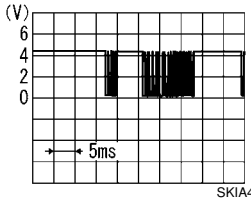 SKIA4403E	Satellite radio tuner audio information does not display properly.
50 (Y)	Ground	Audio TX	Output	ON	Operate audio volume	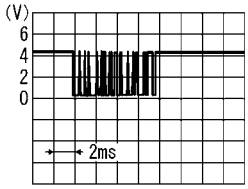 SKIA4402E	Satellite radio tuner audio information does not display properly.

*1: With premium system

*2: With Bluetooth

Subwoofer Harness Connector Terminal Layout (Premium Audio System)

INFOID:0000000001704657

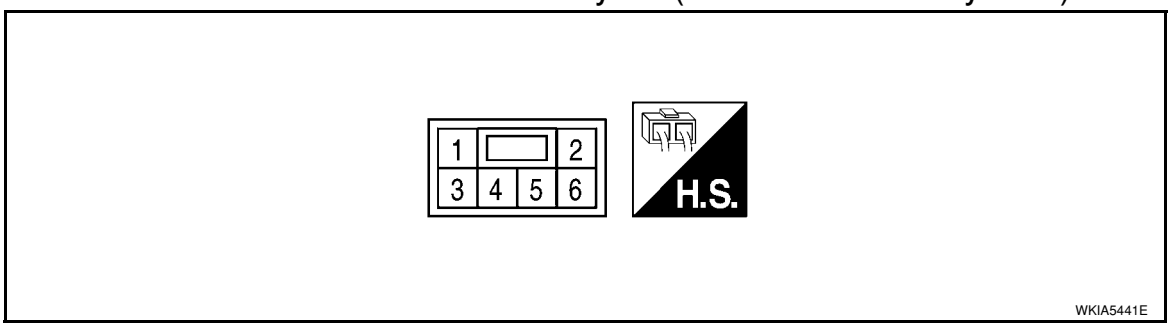

Terminal and Reference Value for Subwoofer (Premium Audio System)

INFOID:0000000001704658

Terminal (Wire color)		Item	Signal input/ output	Condition		Reference value (Approx.)
+	–			Ignition switch	Operation	
1 (R)	Ground	Battery power supply	Intput	OFF	–	Battery voltage
2 (O/L)	6 (W/L)	Audio signal subwoofer	Intput	ON	Receive audio signal	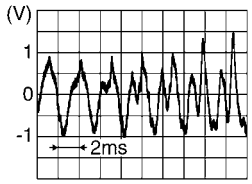 SKIB3609E
3 (B)	Ground	Ground	–	ON	–	0 V
4 (LG)	Ground	Subwoofer amp. ON signal	Input	ON	–	Battery voltage
5	–	Shield	–	–	–	–

Satellite Radio Tuner Harness Connector Terminal Layout

INFOID:0000000001704659

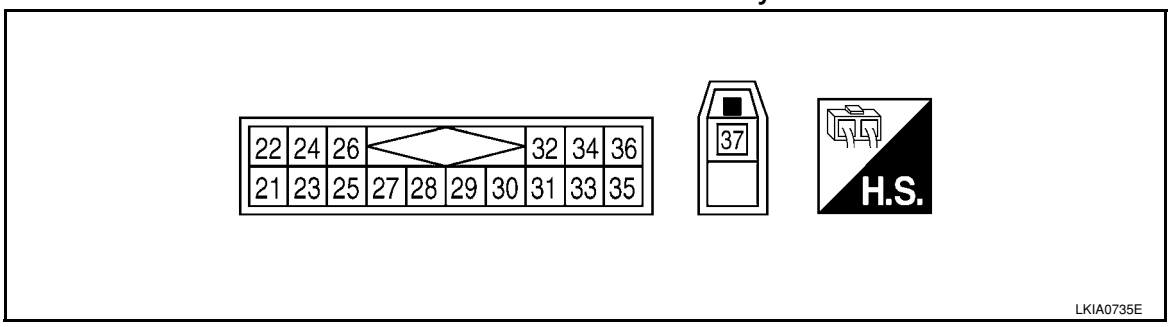

Terminal and Reference Value for Satellite Radio Tuner

INFOID:0000000001704660

Terminal (Wire color)		Item	Signal input/ output	Condition		Voltage (Approx.)
+	–			Ignition switch	Operation	
22 (R)	21 (G)	Audio signal LH	Output	ON	Receive audio signal.	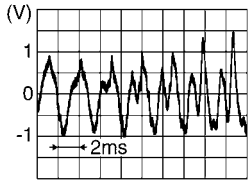 SKIB3609E
24 (B)	23 (W)	Audio signal RH	Output	ON	Receive audio signal.	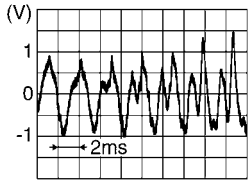 SKIB3609E
25	–	Shield	–	–	–	–
26	–	Data ground		ON		0V
28 (B)	Ground	REQ1 (SAT-AUDIO)	Output	ON	Set to the satellite radio mode	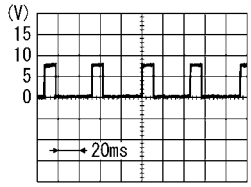 SKIB3825E
29 (R/L)	Ground	Communication signal (SAT-AUDIO)	Output	ON	Set to the satellite radio mode	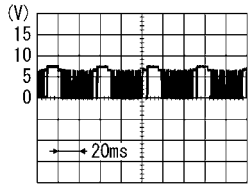 SKIB3824E
30 (R/W)	Ground	Communication signal (AUDIO-SAT)	Input	ON	Set to the satellite radio mode	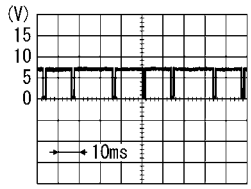 SKIB3826E
32 (R)	Ground	Battery power supply	Input	OFF	–	Battery voltage
36 (L)		ACC power supply		ACC		
37	–	Antenna signal		–	–	–

Trouble Diagnosis

INFOID:0000000001704661

NOTE:
The subwoofer (premium system) may be inoperative if the audio unit harness connectors have not been connected in the proper sequence (when the battery remains connected). The proper sequence is to connect M44

and M45 first followed by M43 last. If the subwoofer is inoperative, be sure to check this condition. Refer to AV-34, "Sound Is Not Heard from Subwoofer (Premium System)" .

- The majority of the audio malfunctions are the result of outside causes (damaged CD, electromagnetic interference, etc.). Check the symptoms below to diagnose the malfunction.
- The vehicle itself can be a source of noise if noise prevention parts or electrical equipment is malfunctioning. Check if noise is caused and/or changed by engine speed, ignition switch turned to each position, and operation of each piece of electrical equipment, and then determine the cause.

Symptom	Check item
Audio system does not work properly.	• Audio unit power supply circuit. Refer to AV-22, "Power Supply Circuit Inspection" . • Audio unit. Refer to "Trouble Diagnosis" .
No sound can be heard from all speakers.	Audio unit. Refer to "Trouble Diagnosis" .
No sound can be heard from one or several speakers.	• Open or short in audio signal circuit between audio unit and front speaker. Refer to AV-29, "Sound Is Not Heard from Front Door Speaker (Base System)" or AV-31, "Sound Is Not Heard from Front Door Speaker or Tweeter (Mid Level and Premium System)" . • Front speaker. Refer to AV-29, "Sound Is Not Heard from Front Door Speaker (Base System)" or AV-31, "Sound Is Not Heard from Front Door Speaker or Tweeter (Mid Level and Premium System)" . • Open or short in audio signal circuit between audio unit and rear speaker. Refer to AV-30, "Sound Is Not Heard from Rear Door Speaker (Base System)" or AV-32, "Sound Is Not Heard from Rear Door Speaker (Mid Level and Premium System)" . • Rear speaker. Refer to AV-30, "Sound Is Not Heard from Rear Door Speaker (Base System)" or AV-32, "Sound Is Not Heard from Rear Door Speaker (Mid Level and Premium System)" . • Tweeter (mid level and premium system) AV-31, "Sound Is Not Heard from Front Door Speaker or Tweeter (Mid Level and Premium System)" or AV-32, "Sound Is Not Heard from Rear Door Speaker (Mid Level and Premium System)" . • Subwoofer (premium system). Refer to AV-34, "Sound Is Not Heard from Subwoofer (Premium System)" . • Audio unit. Refer to AV-22, "Power Supply Circuit Inspection" .
No sound can be heard from radio or noise is heard.	• Antenna feeder. Refer to AV-41 . • Antenna. Refer to AV-41 . • Audio unit. Refer to AV-22, "Power Supply Circuit Inspection" .

NOTE:
Noise resulting from variations in field strength, such as fading noise and multi-path noise, or external noise from trains and other sources. It is not a malfunction.

- Fading noise: This noise occurs because of variations in the field strength in a narrow range due to mountains or buildings blocking the signal.
- Multi-path noise: This noise results from the waves sent directly from the broadcast station arriving at the antenna at a different time from the waves that reflect off of mountains or buildings.

Noise Inspection

INFOID:0000000001704662

The vehicle itself can be a source of noise if noise prevention parts or electrical equipment is malfunctioning. Check if noise is caused and/or changed by engine speed, ignition switch turned to each position, and operation of each piece of electrical equipment, and determine the cause.

NOTE:
The source of the noise can be found easily by listening to the noise while removing the fuses of electrical components, one by one.

TYPE OF NOISE AND POSSIBLE CAUSE

Occurrence condition		Possible cause
Occurs only when engine is ON.	A continuous growling noise occurs. The speed of the noise varies with changes in the engine speed.	Ignition components
	A whistling noise occurs while the engine speed is high. A booming noise occurs while the engine is running and the lighting switch is ON.	Generator
Noise only occurs when various electrical components are operating.	A cracking or snapping sound occurs with the operation of various switches.	Relay malfunction, radio malfunction
	The noise occurs when various motors are operating.	• Motor case ground • Motor
The noise occurs constantly, not just under certain conditions.		• Rear defogger coil malfunction • Open circuit in printed heater
A cracking or snapping sound occurs while the vehicle is being driven, especially when it is vibrating excessively.		• Ground wire of body parts. • Ground due to improper part installation • Wiring connections or a short circuit

Power Supply Circuit Inspection

INFOID:0000000001704663

1.CHECK FUSE

Check that the following fuses of the subwoofer (premium system) and audio unit are not blown.

Unit	Terminals	Signal name	Fuse No.
Audio unit	19	Battery power	27
	7	Ignition switch ACC or ON	20
Subwoofer (with premium audio)	1	Ignition switch ACC or ON	27

OK or NG

OK >> GO TO 2.
NG >> If fuse is blown, be sure to eliminate cause of blown fuse before installing new fuse. Refer to PG-3 .

2.AUDIO UNIT POWER SUPPLY CIRCUIT CHECK

1. Disconnect audio unit connector.
2. Check voltage between the audio unit and ground.

Unit	Terminal No.			OFF	ACC	ON
	(+)		(-)			
	Connector	Terminal				
Audio unit	M43	19	Ground	Battery voltage	Battery voltage	Battery voltage
		7	Ground	0V	Battery voltage	Battery voltage

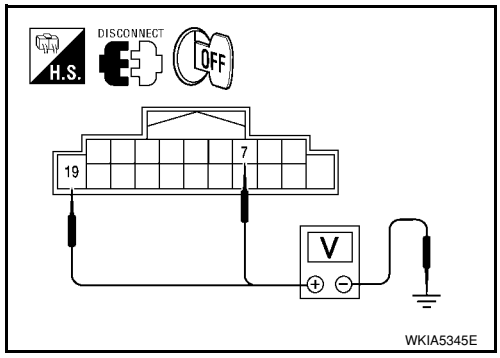

OK or NG

OK >> With premium system, GO TO 3.
NG >> • Check connector housings for disconnected or loose terminals.
• Repair harness or connector.

3.SUBWOOFER (PREMIUM SYSTEM) POWER SUPPLY CIRCUIT CHECK

1. Disconnect subwoofer connector.

2. Check voltage between subwoofer (premium system) and ground.

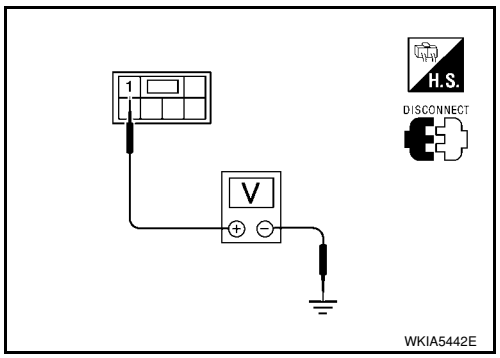

Unit	Terminal No.			OFF	ACC	ON
	(+)		(-)			
	Connector	Terminal				
Subwoofer	B29	1	Ground	0V	Battery voltage	Battery voltage

OK or NG

OK >> GO TO 4.
NG >> • Check connector housings for disconnected or loose terminals.
• Repair harness or connector.

4. GROUND CIRCUIT CHECK

Check continuity between subwoofer (premium system) harness connector B29 terminal 3 and ground.

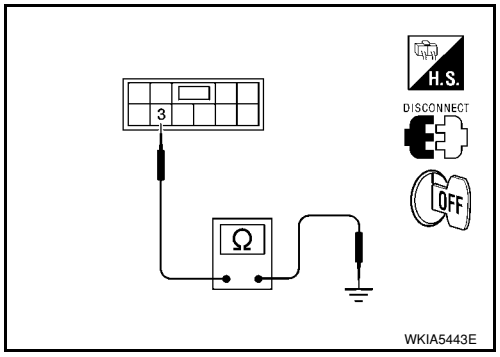

Continuity should exist.

OK or NG

OK >> Inspection End.
NG >> • Check connector housings for disconnected or loose terminals.
• Repair harness or connector.

Satellite Radio Tuner (Factory Installed) Power and Ground Supply Circuit Inspection

INFOID:0000000001704664

1. CHECK FUSES

Check that the following fuses are not blown.

Unit	Terminals	Signal name	Fuse No.
Satellite radio tuner (factory installed)	32	Battery power	27
	36	Ignition switch ACC or ON	20

OK or NG

OK >> GO TO 2.
NG >> If fuse is blown, be sure to eliminate cause of blown fuse before installing new fuse. Refer to PG-3 .

2. POWER SUPPLY CIRCUIT CHECK

1. Turn ignition switch OFF.
2. Disconnect satellite radio tuner (factory installed) connector B30.
3. Check voltage between the satellite radio tuner (factory installed) and ground.

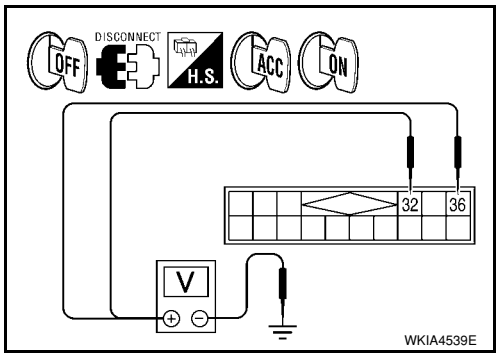

Unit	Terminal No.			OFF	ACC	ON
	(+)		(-)			
	Connector	Terminal				
Satellite radio tuner (factory installed)	B30	32	Ground	Battery voltage	Battery voltage	Battery voltage
		36	Ground	0V	Battery voltage	Battery voltage

OK or NG

OK >> GO TO 3.

NG >> • Check connector housings for disconnected or loose terminals.
• Repair harness or connector.

3. GROUND CIRCUIT CHECK

1. Turn ignition switch OFF.
2. Inspect satellite radio tuner (factory installed) case ground.
3. Disconnect satellite radio tuner (factory installed) connector B30 (A) and audio unit connector M45 (B).
4. Check continuity between satellite radio tuner (factory installed) and audio unit.

Terminals				Continuity
Satellite radio tuner		Audio unit		
Connector	Terminal	Connector	Terminal	
A: B30	25	B: M45	45	Yes
	26		46	

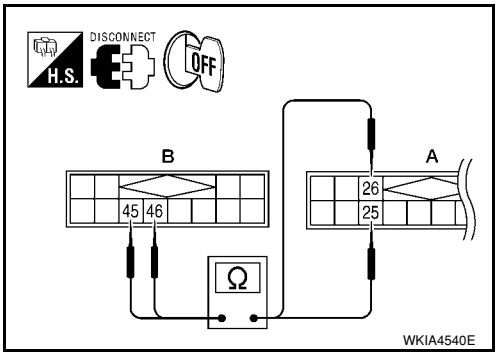

OK or NG

OK >> Inspection End.
NG >> • Check connector housings for disconnected or loose terminals.
• Repair harness, connector or satellite radio tuner (factory installed) case ground.

Satellite Radio Tuner (Factory Installed) Communication Circuit Inspection

INFOID:0000000001704665

1. CHECK HARNESS - 1

1. Turn ignition switch OFF.
2. Disconnect satellite radio tuner (factory installed) connector B30 and audio unit connector M45.
3. Check continuity between satellite radio tuner (factory installed) harness connector B30 (A) terminal 28 and audio unit harness connector M45 (B) terminal 48

Continuity should exist.

4. Check continuity between satellite radio tuner (factory installed) harness connector B30 (A) terminal 28 and ground.

Continuity should not exist.

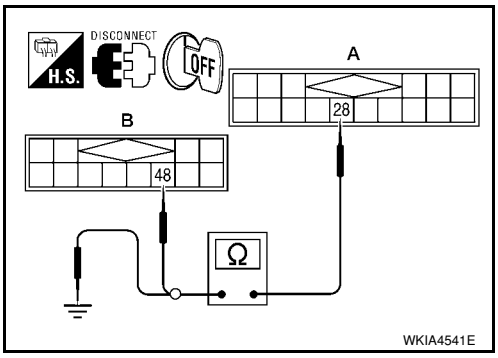

OK or NG

OK >> GO TO 2.
NG >> Repair harness or connector.

2. CHECK HARNESS - 2

1. Check continuity between satellite radio tuner (factory installed) harness connector B30 (A) terminal 29 and audio unit harness connector M45 (B) terminal 49

Continuity should exist.

2. Check continuity between satellite radio tuner (factory installed) harness connector B30 (A) terminal 29 and ground.

Continuity should not exist.

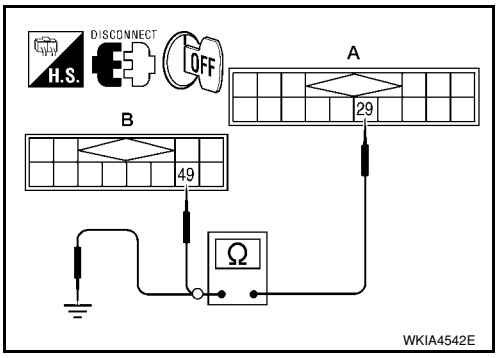

OK or NG

OK >> GO TO 3.
NG >> Repair harness or connector.

3. CHECK HARNESS - 3

1. Check continuity between satellite radio tuner (factory installed) harness connector B30 (A) terminal 30 and audio unit harness connector M45 (B) terminal 50

Continuity should exist.

2. Check continuity between satellite radio tuner (factory installed) harness connector B30 (A) terminal 30 and ground.

Continuity should not exist.

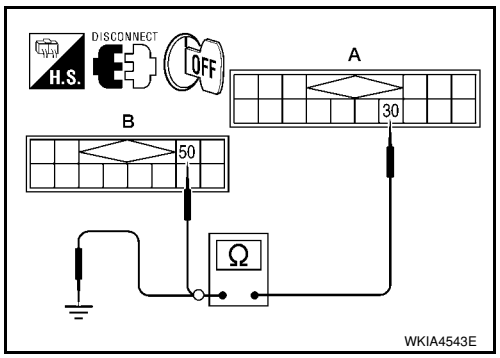

OK or NG

OK >> GO TO 4.
NG >> Repair harness or connector.

4. CHECK REQ1 SIGNAL

1. Connect satellite radio tuner (factory installed) connector and audio unit connector.
2. Turn ignition switch to ACC
3. Check signal between satellite radio tuner (factory installed) harness connector B30 terminal 28 and ground with CONSULT-III or oscilloscope.

28 - Ground	**: Refer to AV-20, "Terminal and Reference Value for Satellite Radio Tuner" .**

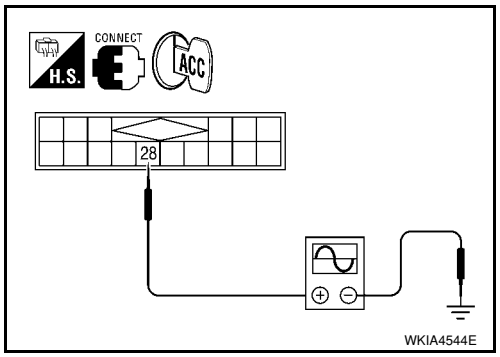

OK or NG

OK >> GO TO 5.
NG >> Replace audio unit. Refer to AV-36, "Removal and Installation" .

5. CHECK TXD SIGNAL

Check signal between satellite radio tuner (factory installed) harness connector B30 terminal 29 and ground with CONSULT-III or oscilloscope.

29 - Ground	**: Refer to AV-20, "Terminal and Reference Value for Satellite Radio Tuner" .**

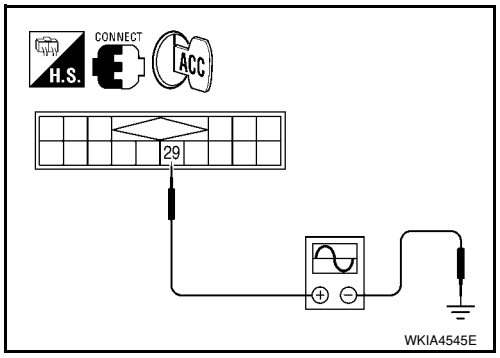

OK or NG

OK >> GO TO 6.
NG >> Replace audio unit. Refer to AV-36, "Removal and Installation" .

6. CHECK RXD SIGNAL

Check signal between satellite radio tuner (factory installed) harness connector B30 terminal 30 and ground with CONSULT-III or oscilloscope.

30 - Ground	**: Refer to AV-20, "Terminal and Reference Value for Satellite Radio Tuner" .**

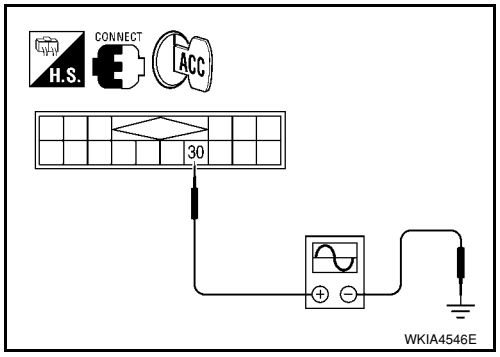

OK or NG

OK >> Replace satellite radio tuner. Refer to AV-36, "Removal and Installation" .
NG >> Replace audio unit. Refer to AV-36, "Removal and Installation" .

Satellite Radio Tuner (Factory Installed) Left Channel Audio Signal Circuit Inspection

INFOID:0000000001704666

1.CHECK HARNESS

1. Turn ignition switch OFF.
2. Disconnect satellite radio tuner (factory installed) connector B30 (A) and audio unit connector M45 (B).
3. Check continuity between satellite radio tuner (factory installed) and audio unit.

Terminals				Continuity
Satellite radio tuner		Audio unit		
Connector	Terminal	Connector	Terminal	
A: B30	21	B: M45	41	Yes
	22		42	

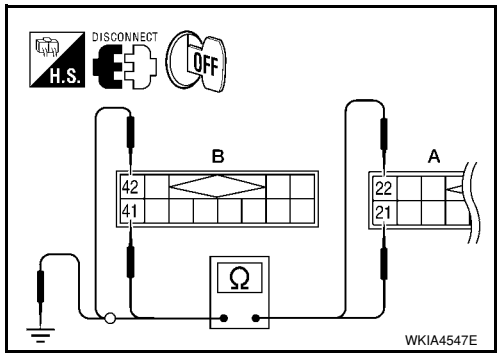

4. Check continuity between satellite radio tuner (factory installed) and ground.

Terminals			Continuity
Satellite radio tuner		—	
Connector	Terminal		
A: B30	21	Ground	No
	22		

OK or NG

OK >> GO TO 2.
NG >> Repair harness or connector.

2.CHECK LEFT CHANNEL AUDIO SIGNAL

1. Connect satellite radio tuner (factory installed) and audio unit.
2. Turn ignition switch ON.
3. Check signal between satellite radio tuner (factory installed) connector B30 terminals 21 and 22 with CONSULT-III or oscilloscope.

21 - 22 **: Refer to AV-20, "Terminal and Reference Value for Satellite Radio Tuner" .**

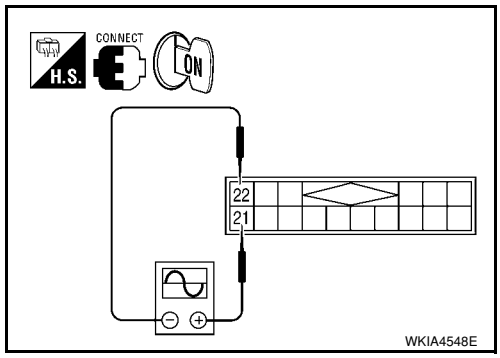

OK or NG

OK >> Replace audio unit. Refer to AV-36, "Removal and Installation" .
NG >> Replace satellite radio tuner. Refer to AV-36, "Removal and Installation" .

Satellite Radio Tuner (Factory Installed) Right Channel Audio Signal Circuit Inspection

INFOID:0000000001704667

1.CHECK HARNESS

1. Turn ignition switch OFF.
2. Disconnect satellite radio tuner (factory installed) connector B30 (A) and audio unit connector M45 (B).
3. Check continuity between satellite radio tuner (factory installed) and audio unit.

Terminals				Continuity
Satellite radio tuner		Audio unit		
Connector	Terminal	Connector	Terminal	
A: B30	23	B: M45	43	Yes
	24		44	

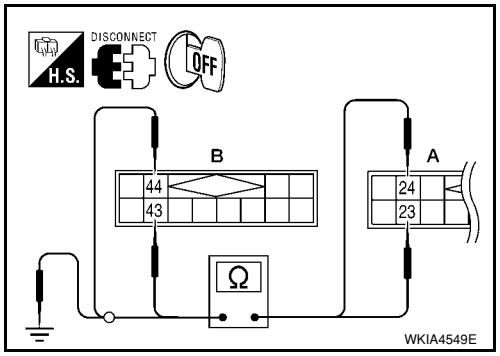

4. Check continuity between satellite radio tuner (factory installed) and ground.

Terminals			Continuity
Satellite radio tuner		—	
Connector	Terminal		
A: B30	23	Ground	No
	24		

OK or NG

OK >> GO TO 2.
NG >> Repair harness or connector.

2. CHECK RIGHT CHANNEL AUDIO SIGNAL

1. Connect satellite radio tuner (factory installed) and audio unit.
2. Turn ignition switch ON.
3. Check signal between satellite radio tuner (factory installed) connector B30 terminals 23 and 24 with CONSULT-III or oscilloscope.

23 - 24 **: Refer to AV-20, "Terminal and Reference Value for Satellite Radio Tuner".**

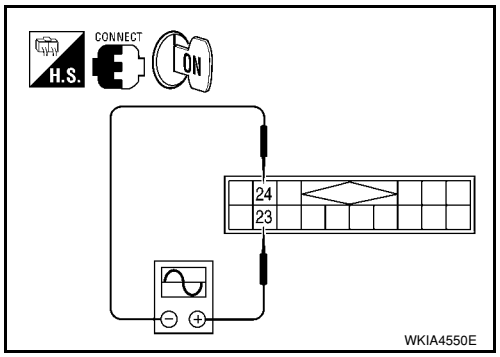

OK or NG

OK >> Replace audio unit. Refer to AV-36, "Removal and Installation".
NG >> Replace satellite radio tuner. Refer to AV-36, "Removal and Installation".

Steering Switch Check (With Bluetooth)

INFOID:0000000001704668

1. CHECK HARNESS

1. Turn ignition switch OFF.
2. Disconnect Bluetooth control unit connector and spiral cable connector M30.
3. Check continuity between Bluetooth control unit (A) connector B121 terminals 12, 14, and 13 and spiral cable (B) connector M30 terminals 24, 31, and 32.

Terminals				Continuity
A		B		
Connector	Terminal	Connector	Terminal	
B121	12	M30	24	Yes
	13		32	
	14		31	

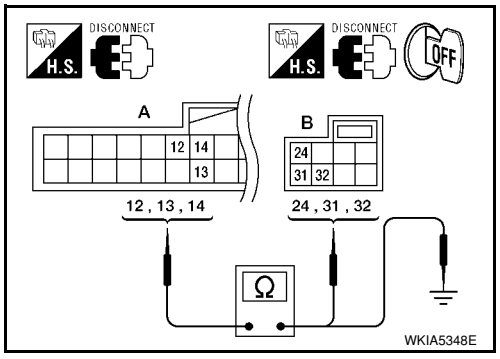

4. Check continuity between Bluetooth control unit and ground.

Terminals			Continuity
(+)		(–)	
Connector	Terminal		
B121	12	Ground	No
	13		
	14		

OK or NG

OK >> GO TO 3.
NG >> Repair harness.

2. CHECK HARNESS

1. Disconnect audio unit connector.
2. Check continuity between audio unit (A) connector M43 terminals 6, 15, and 16 and Bluetooth control unit (B) connector B121 terminals 17, 19, and 18.

Terminals				Continuity
(A)		(B)		
Connector	Terminal	Connector	Terminal	
M43	6	B121	17	Yes
	15		19	
	16		18	

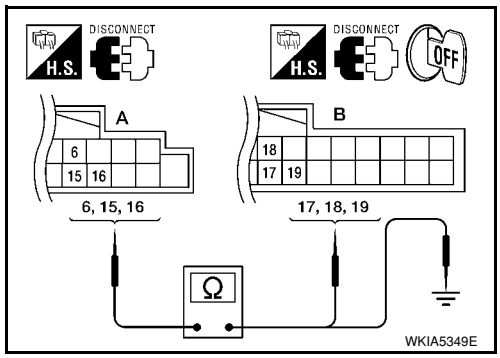

OK or NG

OK >> GO TO 4.
NG >> Repair harness.

3. SPIRAL CABLE CHECK

1. Disconnect spiral cable connector M102.
2. Check continuity between spiral cable terminals.

16 - 32 : Continuity should exist.
17 - 31 : Continuity should exist.
20 - 24 : Continuity should exist.

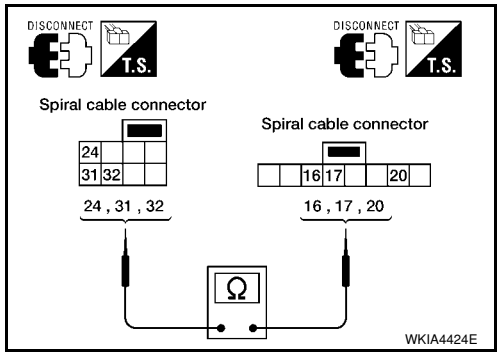

OK or NG

OK >> GO TO 4.
NG >> Replace spiral cable. Refer to SRS-36, "Removal and Installation" .

4. CHECK STEERING SWITCH RESISTANCE

Check resistance between spiral cable connector M102 terminals.

Terminal		Signal name	Condition	Resistance (Ω) (Approx.)
16	17	Seek (down)	Depress Seek down switch.	165
		Phone/Send	Depress Phone/Send switch.	0
		Volume (down)	Depress volume down switch.	487
20	17	Seek (up)	Depress Seek up switch.	165
		Phone/End	Depress Phone/End switch.	0
		Volume (up)	Depress volume up switch.	487

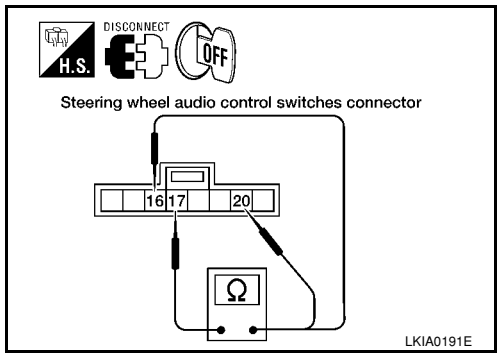

OK or NG

OK >> Inspection End.
NG >> Replace steering switch. Refer to AV-36, "Removal and Installation" .

Sound Is Not Heard from Front Door Speaker (Base System)

INFOID:0000000001704669

1. HARNESS CHECK

1. Disconnect audio unit connector and front door speaker connector (LH or RH).
2. Check continuity between audio unit connector M43 (A) terminal and suspect speaker connector (B) terminal.

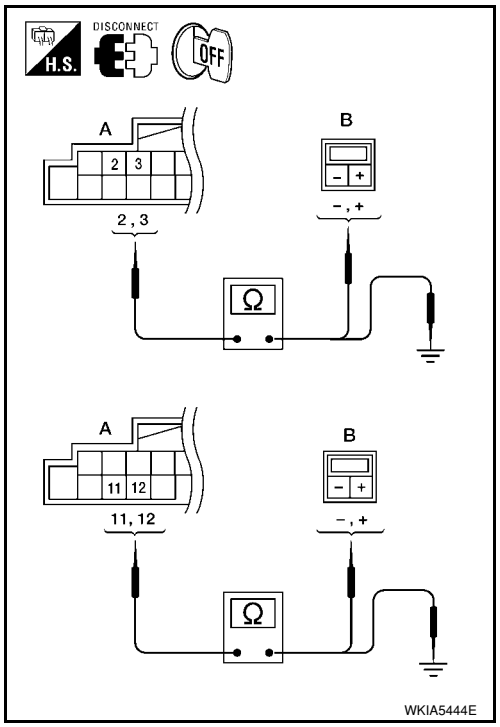

Terminals				Continuity
A		B		
Connector	Terminal	Connector	Terminal	
M43	2	D12	+	Yes
	3		-	
	11	D112	+	
	12		-	

3. Check continuity between audio unit connector M43 terminal and ground.

Terminals			Continuity
Audio unit		—	
Connector	Terminal		
M43	2	Ground	No
	3		
	11		
	12		

OK or NG

OK >> GO TO 2.
NG >> • Check connector housings for disconnected or loose terminals.
• Repair harness or connector.

2. FRONT SPEAKER SIGNAL CHECK

1. Connect audio unit connector and suspect speaker connector.
2. Turn ignition switch to ACC.
3. Push “POWER” switch.

4. Check the signal between audio unit harness connector terminals with CONSULT-III or oscilloscope.

Terminals				Condition	Reference signal
(+)		(-)			
Connector	Terminal	Connector	Terminal		
M43	2	M43	3	Receive audio signal	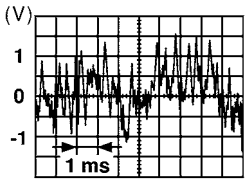 SKIA0177E
	11		12		

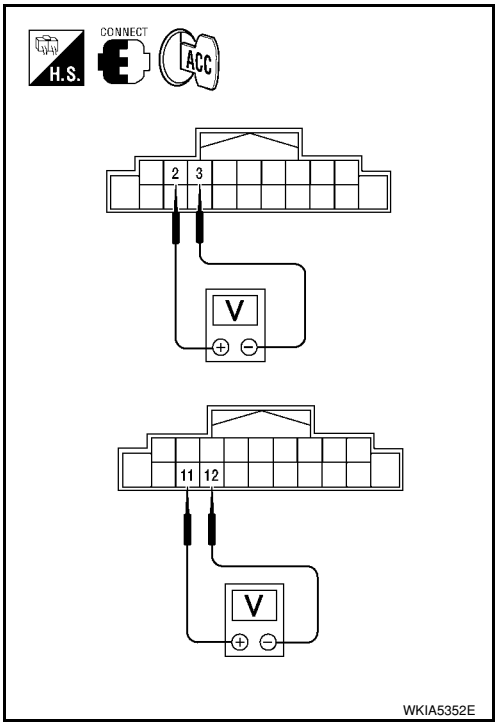

OK or NG

OK >> Replace speaker. Refer to AV-36, "Removal and Installation" or AV-36, "Removal and Installation" .

NG >> Replace audio unit. Refer to AV-36, "Removal and Installation" .

Sound Is Not Heard from Rear Door Speaker (Base System)

INFOID:0000000001704670

1. HARNESS CHECK

1. Disconnect audio unit connector and rear door speaker connector.
2. Check continuity between audio unit (A) connector terminal and rear door speaker (B) connector terminal.

Terminals				Continuity
A		B		
Connector	Terminal	Connector	Terminal	
M43	5	D207	-	Yes
	4		+	
	14	D307	-	
	13		+	

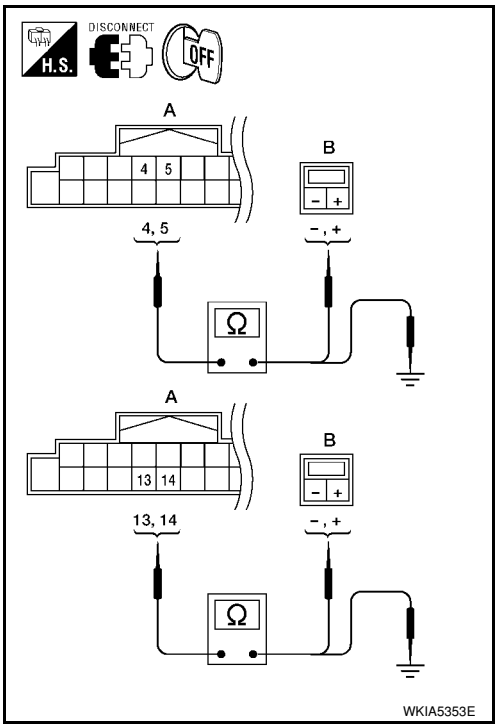

3. Check continuity between audio unit harness connector terminal and ground.

Terminals			Continuity
Audio unit		—	
Connector	Terminal		
M43	5	Ground	No
	4		
	14		
	13		

OK or NG

OK >> GO TO 2.

NG >> • Check connector housings for disconnected or loose terminals.
• Repair harness or connector.

2. REAR SPEAKER SIGNAL CHECK

1. Connect audio unit connector and rear speaker connector.
2. Turn ignition switch to ACC.
3. Push “POWER” switch.
4. Check the signal between audio unit harness connector terminals with CONSULT-III or oscilloscope.

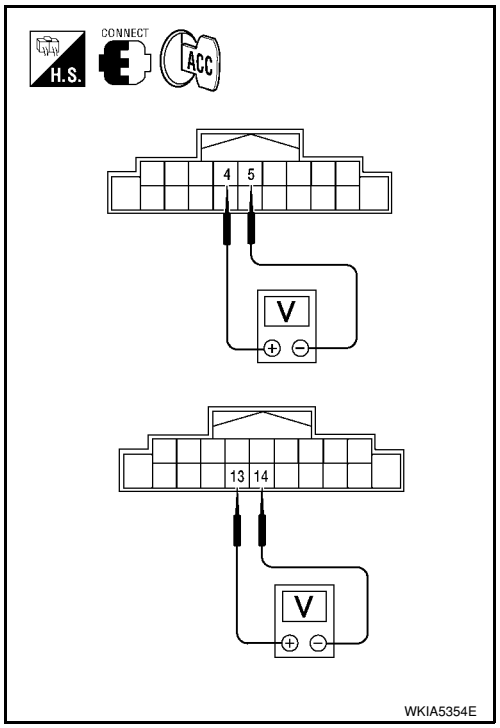

Terminals				Condition	Reference signal
(+)		(-)			
Connector	Terminal	Connector	Terminal		
M43	4	M43	5	Receive audio signal	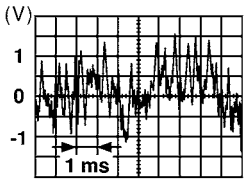 SKIA0177E
	13		14		

OK or NG

OK >> Replace speaker. Refer to AV-36, "Removal and Installation" .

NG >> Replace audio unit. Refer to AV-36, "Removal and Installation" .

Sound Is Not Heard from Front Door Speaker or Tweeter (Mid Level and Premium System)

INFOID:0000000001704671

1. HARNESS CHECK

1. Disconnect audio unit connector and front door speaker and tweeter connector (LH or RH).
2. Check continuity between audio unit harness connector terminal and front door speaker and tweeter harness connector terminal.

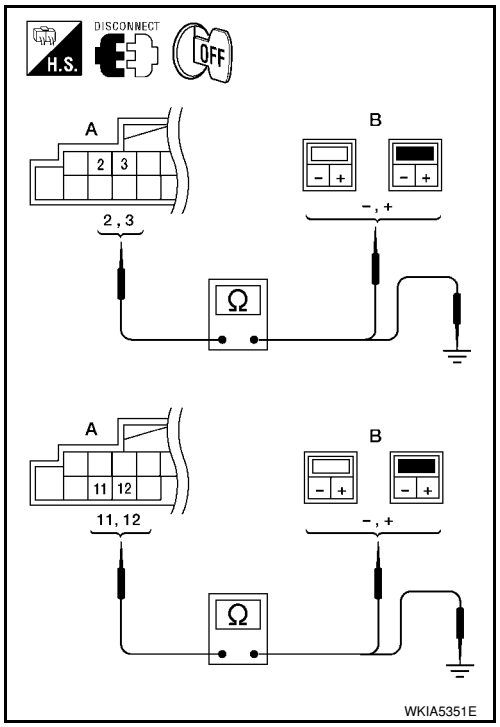

Terminals				Continuity
Audio unit.		Speaker or tweeter		
Connector	Terminal	Connector	Terminal	
M43	2	M46	+	Yes
	3		-	
	11	M47	+	
	12		-	
	2	D12	+	
	3		-	
	11	D112	+	
	12		-	

3. Check continuity between audio unit harness connector terminal and ground.

Terminals			Continuity
Audio unit		—	
Connector	Terminal		
M43	2	Ground	No
	3		
	11		
	12		

OK or NG

OK >> GO TO 2.
NG >> • Check connector housings for disconnected or loose terminals.
• Repair harness or connector.

2. FRONT SPEAKER SIGNAL CHECK

1. Connect audio unit connector, front door speaker connector and tweeter connector.
2. Turn ignition switch to ACC.
3. Push “POWER” switch.
4. Check the signal between audio unit connector terminals with CONSULT-III or oscilloscope.

Terminals				Condi-tion	Reference signal
(+)		(-)			
Con-nector	Termi-nal	Con-nector	Termi-nal		
M51	2	M51	3	Receive audio signal	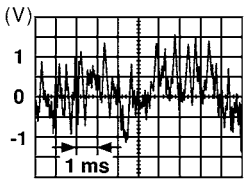 SKIA0177E
	11		12		

OK or NG

OK >> Replace front speaker. Refer to AV-36, "Removal and Installation" .
NG >> Replace audio unit. Refer to AV-36, "Removal and Installation" .

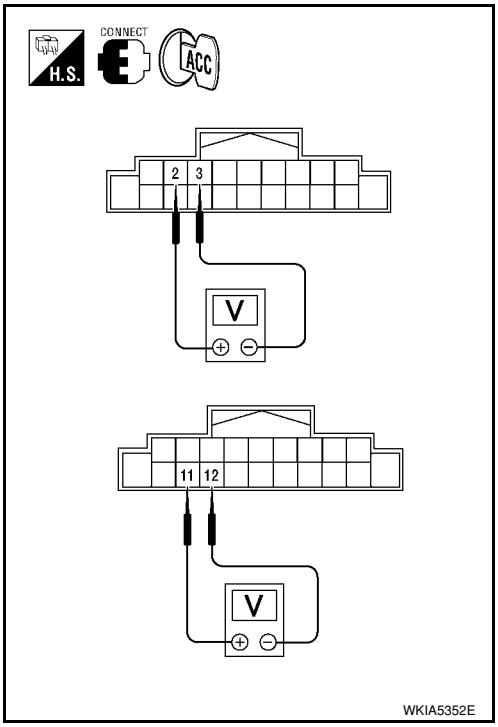

Sound Is Not Heard from Rear Door Speaker (Mid Level and Premium System)

INFOID:0000000001704672

1. HARNESS CHECK

1. Disconnect audio unit connector and rear door speaker connector.

2. Check continuity between audio unit harness connector terminal and speaker harness connector terminal.

Terminals				Continuity
Audio unit		Speaker		
Connector	Terminal	Connector	Terminal	
M43	4	D207	+	Yes
	5		-	
	13	D307	+	
	14		-	

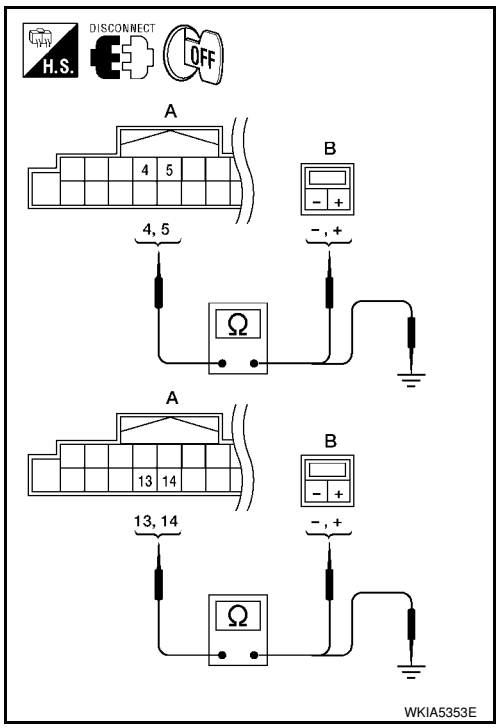

3. Check continuity between audio unit harness connector terminal and ground.

Terminals			Continuity
Audio unit		—	
Connector	Terminal		
M43	4	Ground	No
	5		
	13		
	14		

OK or NG

OK >> GO TO 2.

NG >> • Check connector housings for disconnected or loose terminals.
• Repair harness or connector.

2. REAR SPEAKER SIGNAL CHECK

1. Connect audio unit connector and rear door speaker connector.
2. Turn ignition switch to ACC.
3. Push “POWER” switch.
4. Check the signal between audio unit harness connector terminals with CONSULT-III or oscilloscope.

Terminals				Condition	Reference signal
(+)		(-)			
Connector	Terminal	Connector	Terminal		
M43	5	M43	4	Receive audio signal	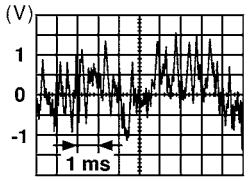 SKIA0177E
	14		13		

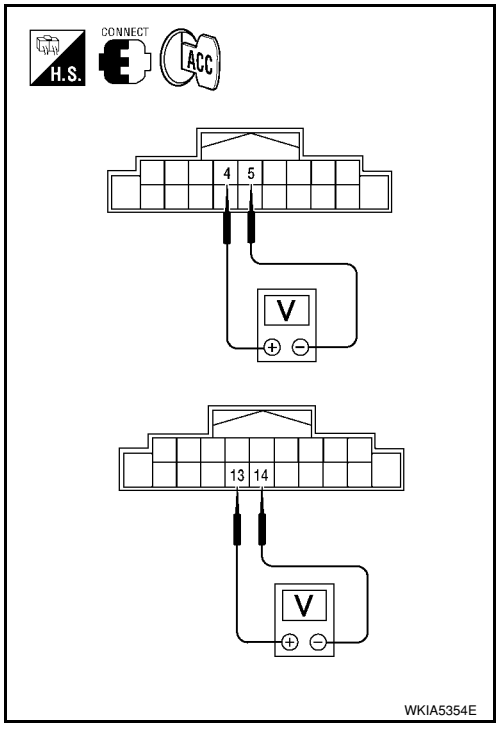

OK or NG

OK >> Replace speaker. Refer to AV-36, "Removal and Installation" .

NG >> Replace audio unit. Refer to AV-36, "Removal and Installation" .

Sound Is Not Heard from Subwoofer (Premium System)

INFOID:0000000001704673

1. CHECK FUSE

Check that the following fuse is not blown.

Unit	Terminals	Signal name	Fuse No.
Subwoofer	1	Battery power	27

OK or NG

OK >> GO TO 2.
NG >> If fuse is blown, be sure to eliminate cause of blown fuse before installing new fuse. Refer to PG-3 .

2. EQ SETTING CHECK

1. Ensure that subwoofer amp. connector B29 and audio unit harness connectors M43, M44 and M45 are securely connected.
2. Turn the ignition switch to the ACC position.
3. Press the "AUDIO", "AUX", and "TUNE DOWN" switches simultaneously, the current EQ Setting will be displayed.

Is "Woofer On" displayed?

YES >> GO TO 3.
NO >> Disconnect all audio unit harness connectors and wait for 2 minutes in order to reset the audio unit. Reconnect audio unit connectors M44 and M45 first followed by M43 last. Repeat Steps 1 through 3 to confirm that "Woofer On" is now displayed.

3. POWER SUPPLY CIRCUIT CHECK

1. Turn ignition switch OFF.
2. Disconnect subwoofer connector.
3. Check voltage between the subwoofer and ground.

Unit	Terminal No.			OFF	ACC	ON
	(+)		(-)			
	Connector	Terminal				
Subwoofer	B29	1	Ground	Battery voltage	Battery voltage	Battery voltage

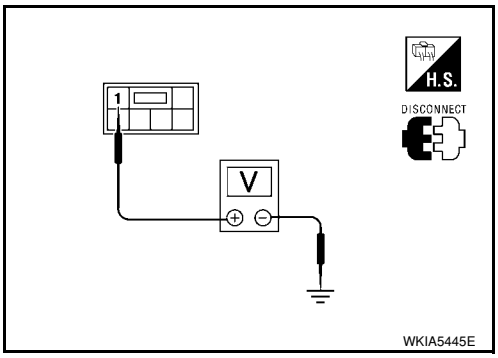

OK or NG

OK >> GO TO 4.
NG >> • Check connector housings for disconnected or loose terminals.
• Repair harness or connector.

4. GROUND CIRCUIT CHECK

1. Turn ignition switch OFF.
2. Check continuity between subwoofer harness connector B29 terminal 3 and ground.

Continuity should exist.

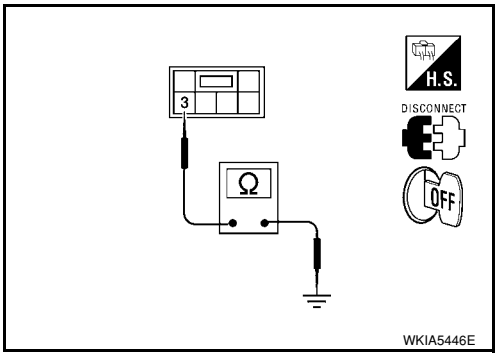

OK or NG

OK >> GO TO 5.
NG >> • Check connector housings for disconnected or loose terminals.
• Repair harness or connector.

5. CHECK SUBWOOFER ON SIGNAL

1. Turn ignition switch to ACC.

2. Operate system and check voltage between subwoofer harness connector B29 terminal 4 and ground.

Voltage : Approx. 11.3V

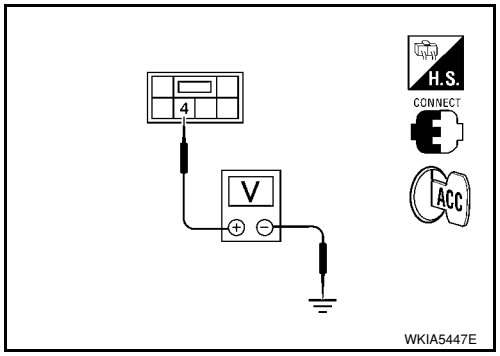

OK or NG

OK >> GO TO 6.
NG >> • Check connector housings for disconnected or loose terminals.
• Repair harness or connector.

6. HARNESS CHECK

1. Turn ignition switch OFF.
2. Disconnect audio unit connector and subwoofer connectors.
3. Check continuity between audio unit harness connector terminal and subwoofer harness connector terminal.

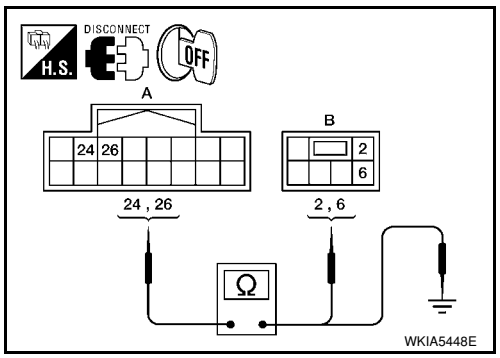

Terminals				Continuity
Audio unit		Subwoofer		
Connector	Terminal	Connector	Terminal	
M44	24	B29	6	Yes
	26		2	

4. Check continuity between audio unit harness connector terminal and ground.

Terminals			Continuity
Audio unit		—	
Connector	Terminal		
M44	24	Ground	No
	26		

OK or NG

OK >> GO TO 7.
NG >> • Check connector housings for disconnected or loose terminals.
• Repair harness or connector.

7. SUBWOOFER SIGNAL CHECK

1. Connect audio unit connector and subwoofer connector.
2. Turn ignition switch to ACC.
3. Check the signal between audio unit harness connector terminals with CONSULT-III or oscilloscope.

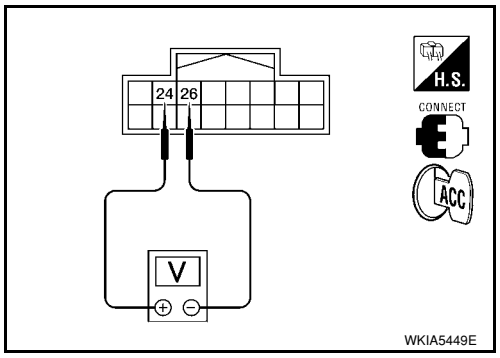

Terminals				Condition	Reference signal
(+)		(-)			
Connector	Terminal	Connector	Terminal		
M44	26	M44	24	Receive audio signal	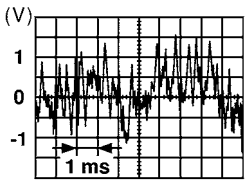 SKIA0177E

OK or NG

OK >> Replace subwoofer. Refer to AV-36, "Removal and Installation" .
NG >> Replace audio unit. Refer to AV-36, "Removal and Installation" .

Removal and Installation

INFOID:0000000001704674

AUDIO UNIT

Removal

1. Remove cluster lid C. Refer to IP-10.
2. Remove the audio unit screws (A), disconnect the connectors and remove the audio unit (1).
3. Remove the audio unit bracket.

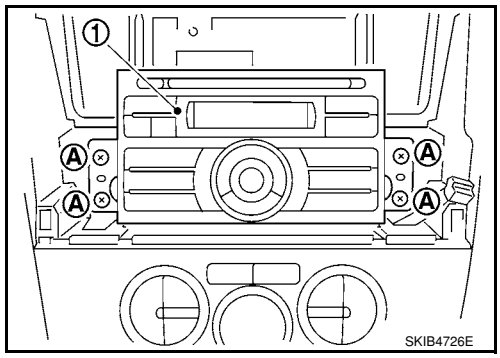

Installation
Installation is in the reverse order of removal.

FRONT DOOR SPEAKER

Removal

1. Remove the front door finisher. Refer to EI-32.
2. Remove the front door speaker screws (A), disconnect the connector and remove the front door speaker (1).

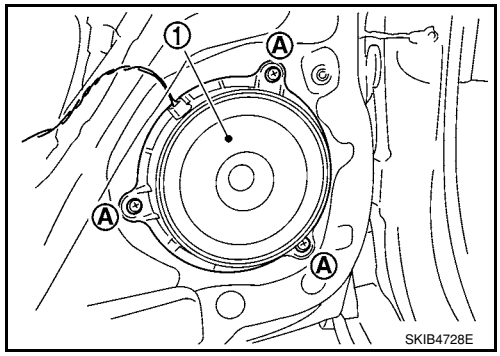

Installation
Installation is in the reverse order of removal.

REAR DOOR SPEAKER

Removal

1. Remove the rear door finisher. Refer to EI-32.
2. Remove the rear door finisher screws (A), disconnect the connector and remove the rear door speaker (1).

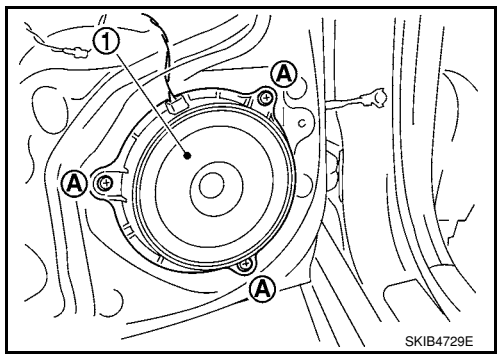

Installation

Installation is in the reverse order of removal.

TWEETER

Removal

1. Remove the front pillar garnish. Refer to EI-37.
2. Remove the tweeter screw (A), disconnect the connector and remove the tweeter (1).

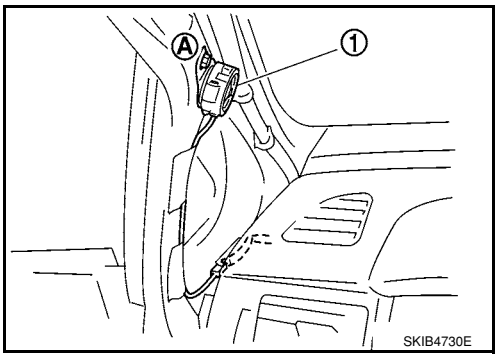

Installation

Installation is in the reverse order of removal.

SATELLITE RADIO TUNER

Hatchback

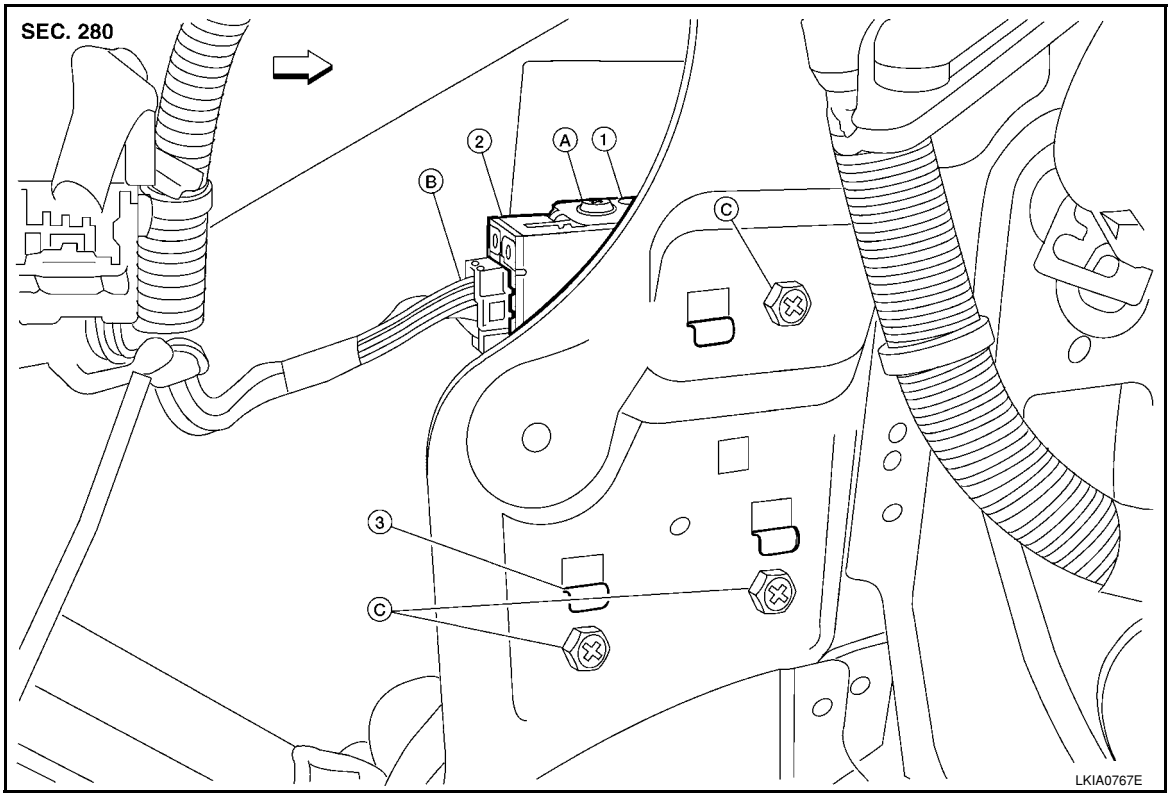

1.	Bracket (upper)	2.	Satellite radio tuner	3.	Bracket (lower)
A.	Screws	B.	Connector	C.	Satellite radio tuner bolts
⇒	Front				

Sedan

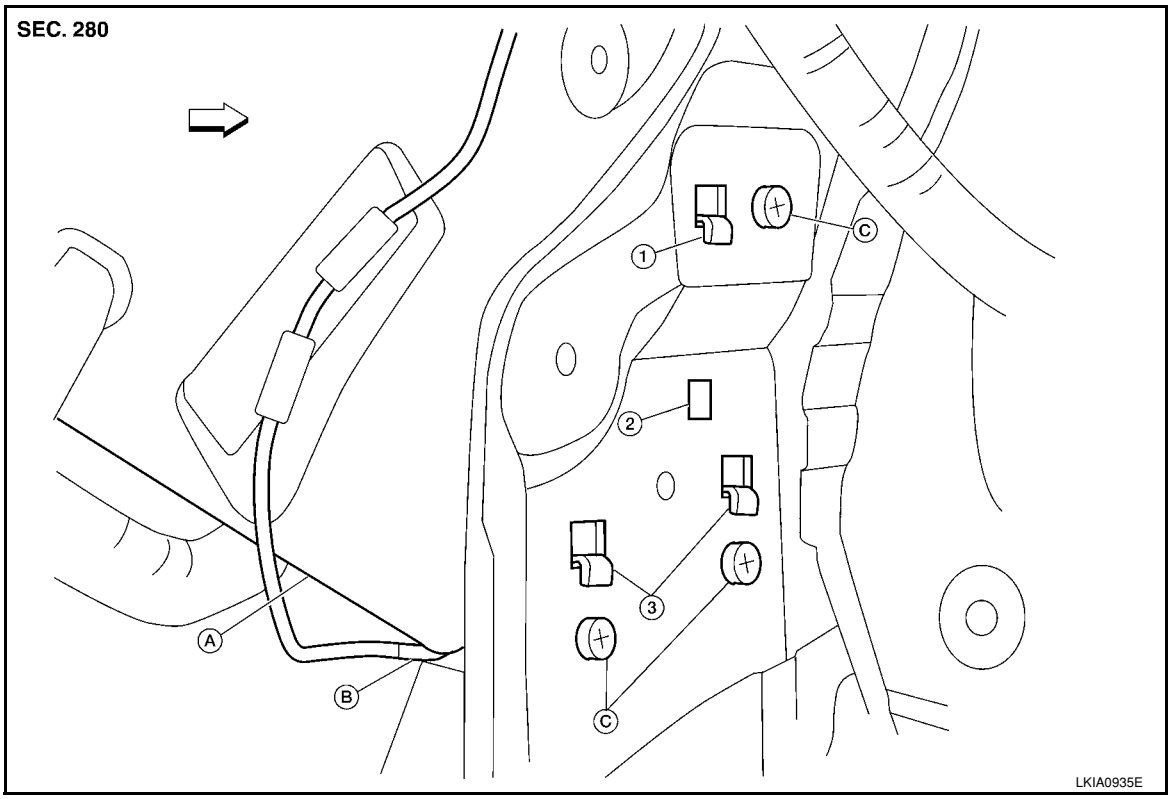

1.	Bracket (upper)	2.	Satellite radio tuner	3.	Bracket (lower)
A.	Satellite radio tuner connector	B.	Satellite radio tuner feeder harness connector	C.	Satellite radio tuner bolts

⇒ Front

Removal

1. For hatchback, remove the luggage side lower finisher (LH) (hatchback only). Refer to EI-51.
2. For sedan, remove the trunk side finisher (LH). Refer to EI-53, "Removal and Installation".
3. For hatchback remove the subwoofer. Refer to "SUBWOOFER".
4. Remove the satellite radio tuner bolts.
5. Disconnect the connectors and remove the satellite radio tuner.
6. If necessary, remove the upper bracket (2) and the lower bracket (1).

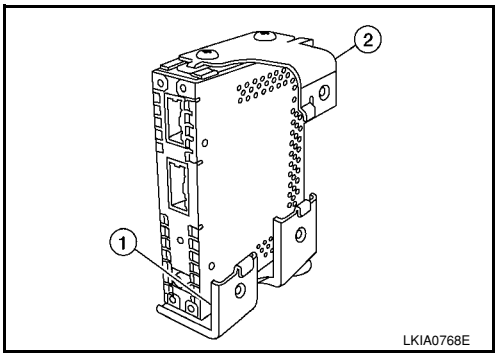

Installation

Installation is in the reverse order of removal.

SATELLITE RADIO ANTENNA

Removal

1. Lower the headlining. Refer to EI-45.

2. Disconnect the satellite radio antenna connectors.
3. Detach the satellite radio antenna feeder harness clips.
4. Remove the satellite radio antenna nut and remove the satellite radio antenna from the roof.

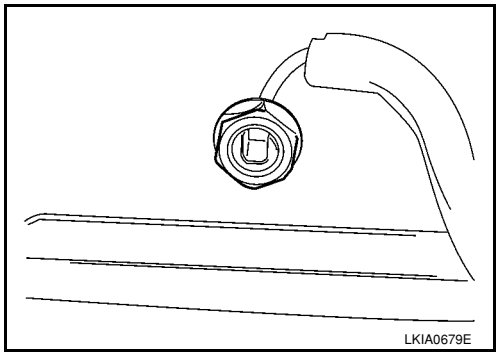

Installation
Installation is in the reverse order of removal.

STEERING WHEEL AUDIO CONTROL SWITCHES

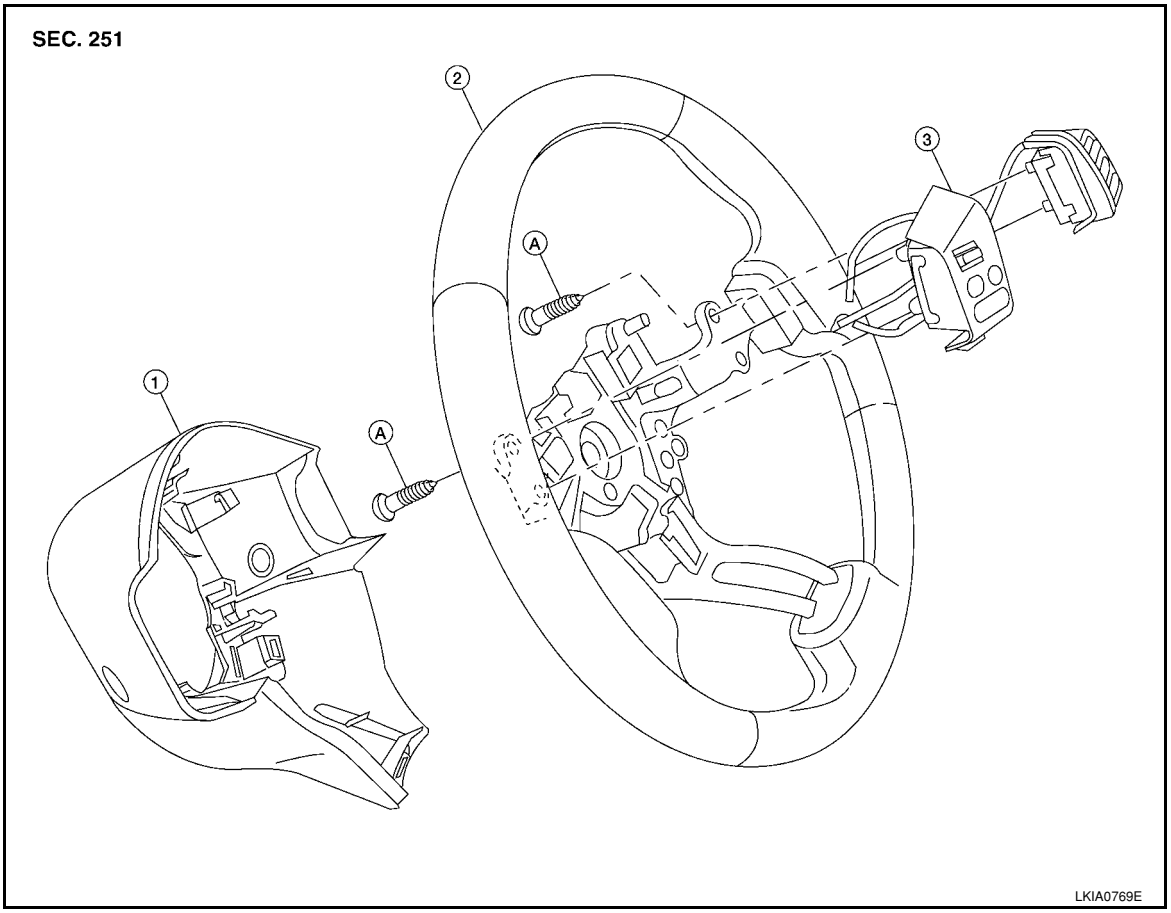

1. Steering wheel finisher cover
2. Steering wheel
3. Steering wheel audio control switches

A. Screws

Removal
1. Remove the steering wheel. Refer to PS-7, "Removal and Installation".
2. Remove the steering wheel finisher cover.
3. Remove the screws and the steering wheel audio control switches.

Installation
Installation is in the reverse order of removal.

SUBWOOFER

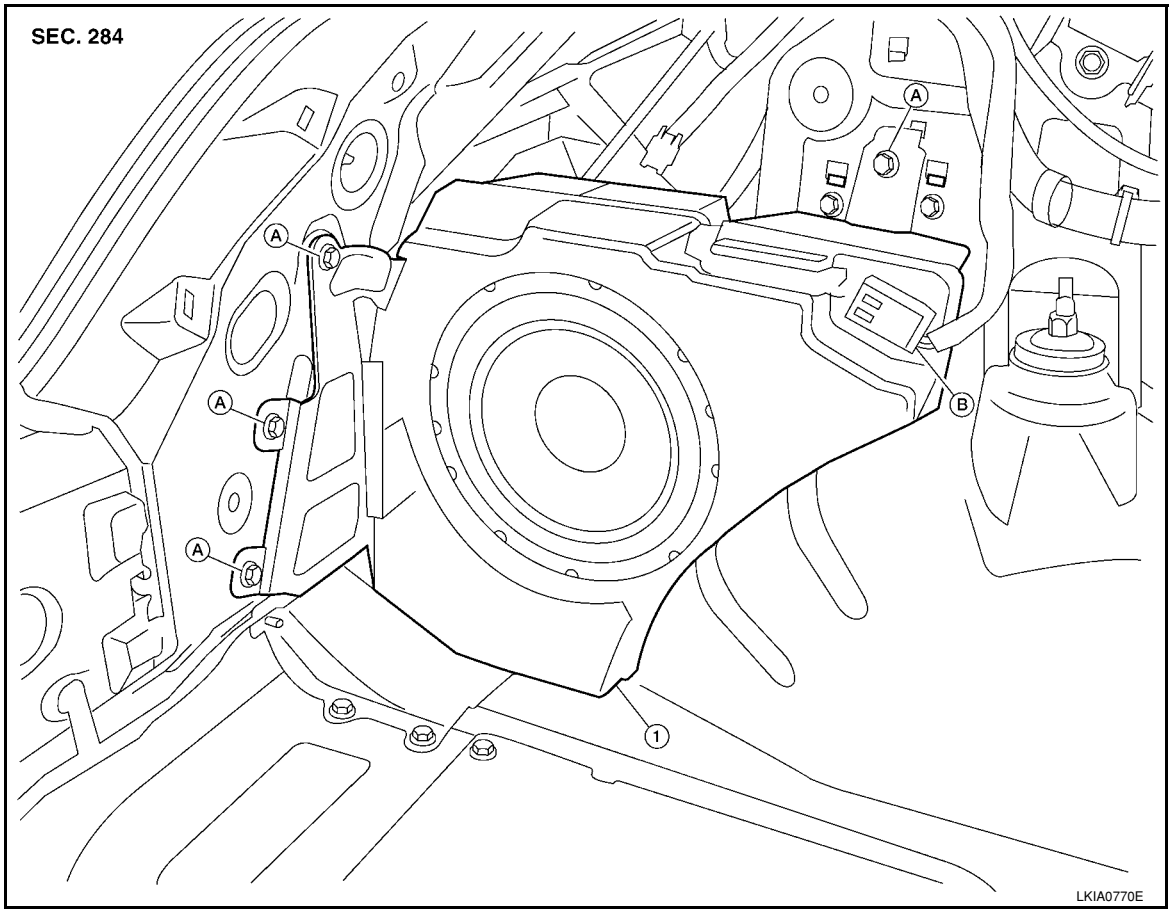

1. Subwoofer
A. Subwoofer bolts
B. Connector

Removal

1. Remove the luggage side lower finisher (LH). Refer to EI-51.
2. Remove the subwoofer bolts.
3. Disconnect the connector and remove the subwoofer.

Installation

Installation is in the reverse order of removal.

AUDIO ANTENNA

Location of Antenna

INFOID:0000000001704675

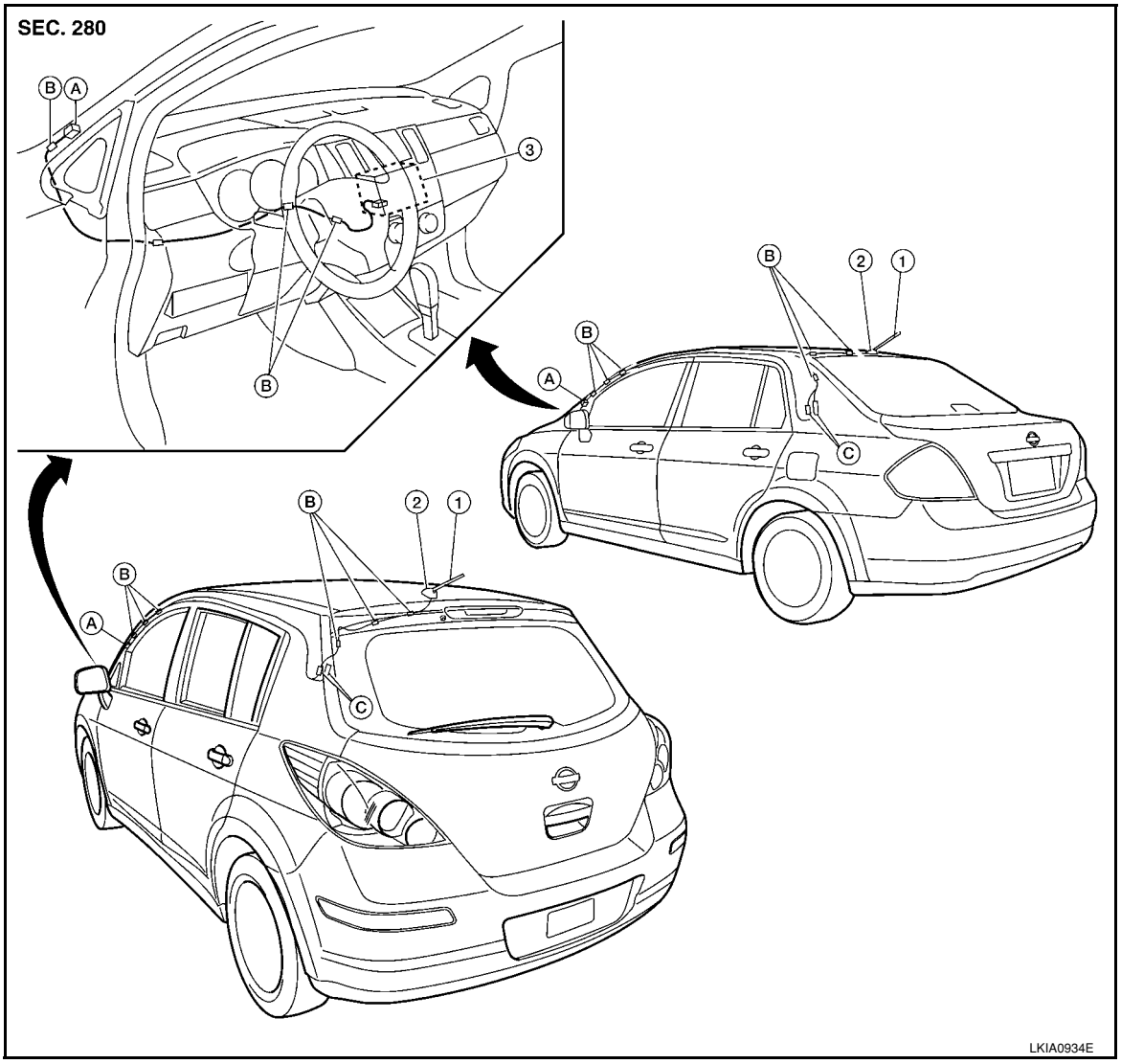

1.	Roof antenna	2.	Roof antenna base	3.	Audio unit
A.	Audio antenna harness connector	B.	Harness clips	C.	Roof antenna harness connectors

Removal and Installation of Roof Antenna

INFOID:0000000001704676

REMOVAL

1. For hatchback, remove the luggage side upper finisher (LH). Refer to EI-51.
2. For sedan, remove the rear pillar finisher. Refer to EI-49, "Removal and Installation - Sedan".
3. Remove rear assist grip (LH). Refer to EI-45.
4. Remove three clips of headlining (rear side). Pull down headlining (rear side) and obtain space for work between vehicle and headlining.
5. Disconnect the roof antenna harness connectors.

6. Remove nut (A) and clips (B).
7. Remove the roof antenna.

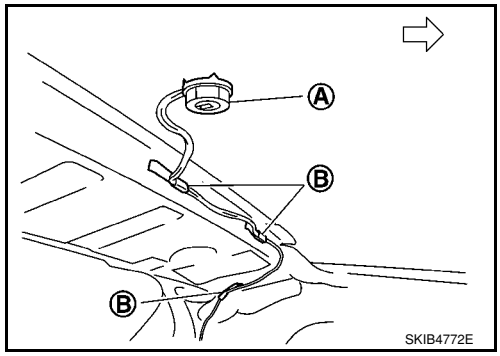

INSTALLATION

Installation is in the reverse order of removal.

TELEPHONE

Component Parts and Harness Connector Location

INFOID:0000000001704677

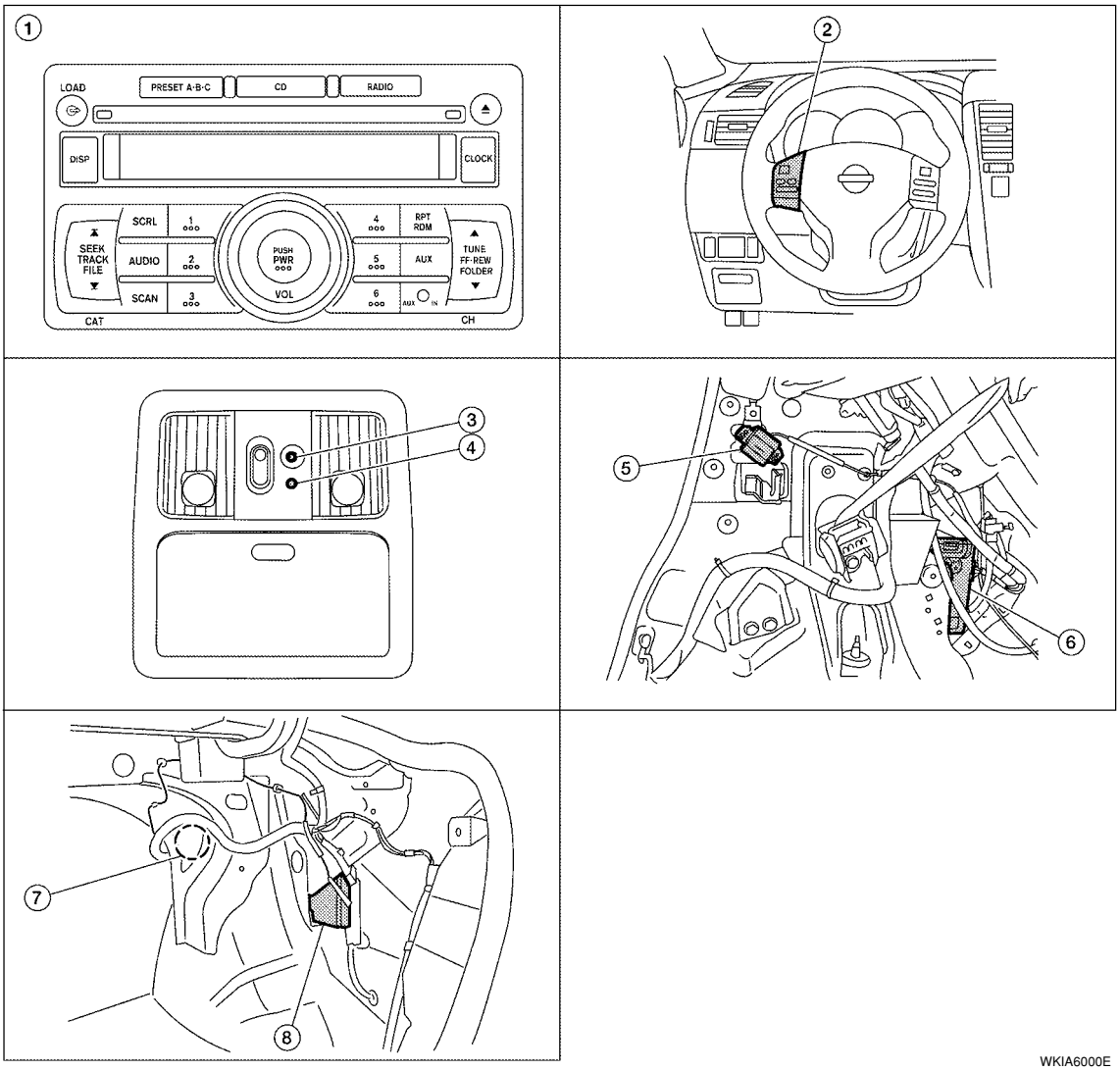

WKIA6000E

1. Audio unit M43, M44, M45
2. Steering wheel audio control switches
3. Bluetooth microphone R15
4. Bluetooth ON indicator R15
5. Bluetooth antenna (hatchback)
6. Bluetooth control unit B121, B122 (hatchback) [view with luggage side lower finisher (RH) removed]
7. Bluetooth antenna (sedan)
8. Bluetooth control unit B121, B122 (sedan) (view with trunk side finisher RH removed)

System Description

INFOID:0000000001704678

BLUETOOTH® HANDS-FREE PHONE SYSTEM

Refer to the Owner's Manual for Bluetooth telephone system operating instructions.

NOTE:

Cellular telephones must have their wireless connection set up (paired) before using the Bluetooth telephone system.

Bluetooth telephone system allows users who have a Bluetooth cellular telephone to make a wireless connection between their cellular telephone and the Bluetooth control unit. Hands-free cellular telephone calls can be sent and received. Personal memos can be created using the NISSAN Voice Recognition system. Some Blue-

tooth cellular telephones may not be recognized by the Bluetooth control unit. When a cellular telephone or the Bluetooth control unit is replaced, the telephone must be paired with the Bluetooth control unit. Different cellular telephones may have different pairing procedures. Refer to the cellular telephone operating manual.

Bluetooth Telephone System Diagram

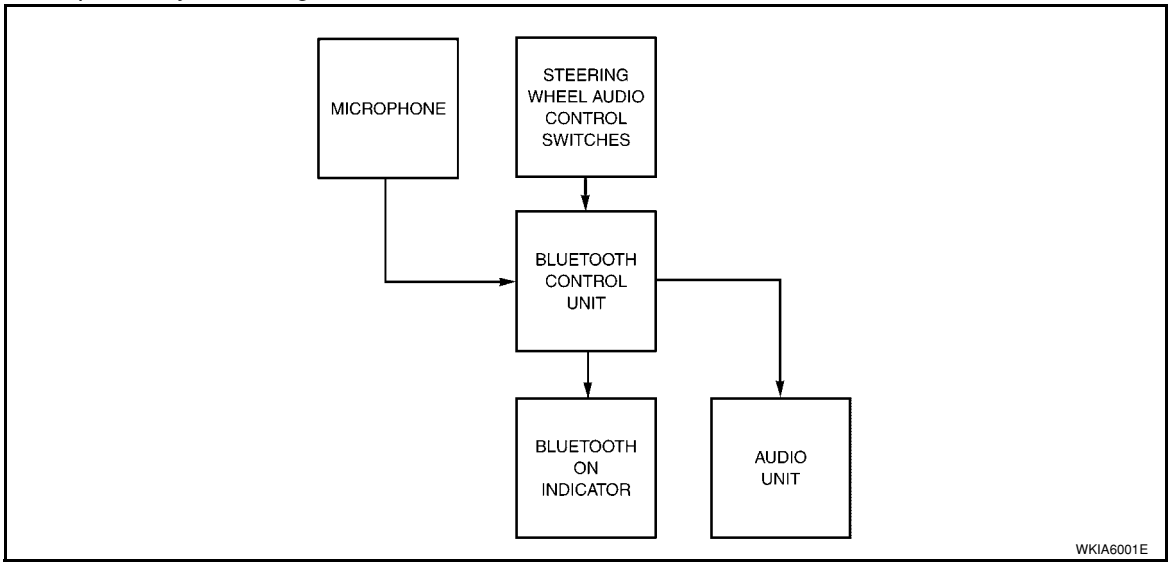

Bluetooth Control Unit

When the ignition switch is turned to ACC or ON, the Bluetooth control unit will power up. During power up, the Bluetooth control unit is initialized and performs various self checks. Initialization may take up to 10 seconds. During this time the Bluetooth ON indicator will flash until initialization is complete. If a phone is present in the vehicle and paired with the Bluetooth control unit, NISSAN Voice Recognition will then become active and the Bluetooth ON indicator will remain on. Bluetooth telephone functions can be turned off using the NISSAN Voice Recognition system. For Bluetooth control unit location, refer to AV-43, "Component Parts and Harness Connector Location".

Steering Wheel Audio Control Switches

When buttons on the steering wheel audio control switch are pushed, the resistance in steering wheel audio control switch circuit changes depending on which button is pushed. The Bluetooth control module uses this signal to perform various functions while navigating through the voice recognition system.
The following functions can be performed using the steering wheel audio control switch:

- Initiate Self Diagnosis of the Bluetooth telephone system
- Start a voice recognition session
- Answer and end telephone calls
- Adjust the volume of calls
- Record memos

Volume Switch

Call volume can be adjusted using the audio unit volume switch.

Bluetooth Microphone

The Bluetooth microphone is located in the roof console assembly. The Bluetooth microphone sends a signal to the Bluetooth control unit. The Bluetooth microphone can be actively tested during self-diagnosis. For Bluetooth microphone location, refer to AV-43, "Component Parts and Harness Connector Location".

Bluetooth ON Indicator

The Bluetooth ON indicator is located in the overhead console. The indicator will flash during power up while the Bluetooth control unit is initializing. This process may take up to 10 seconds. If a phone is present in the vehicle and paired with the Bluetooth control unit, the indicator will remain on to indicate that the system is ready for voice commands. The indicator flashes during self-diagnosis. For Bluetooth ON indicator location, refer to AV-43, "Component Parts and Harness Connector Location".

Audio Unit

The audio unit receives signals from the Bluetooth control unit and sends audio signals to the speakers.

Wiring Diagram - H/PHON -

INFOID:0000000001704679

AV-H/PHON-01

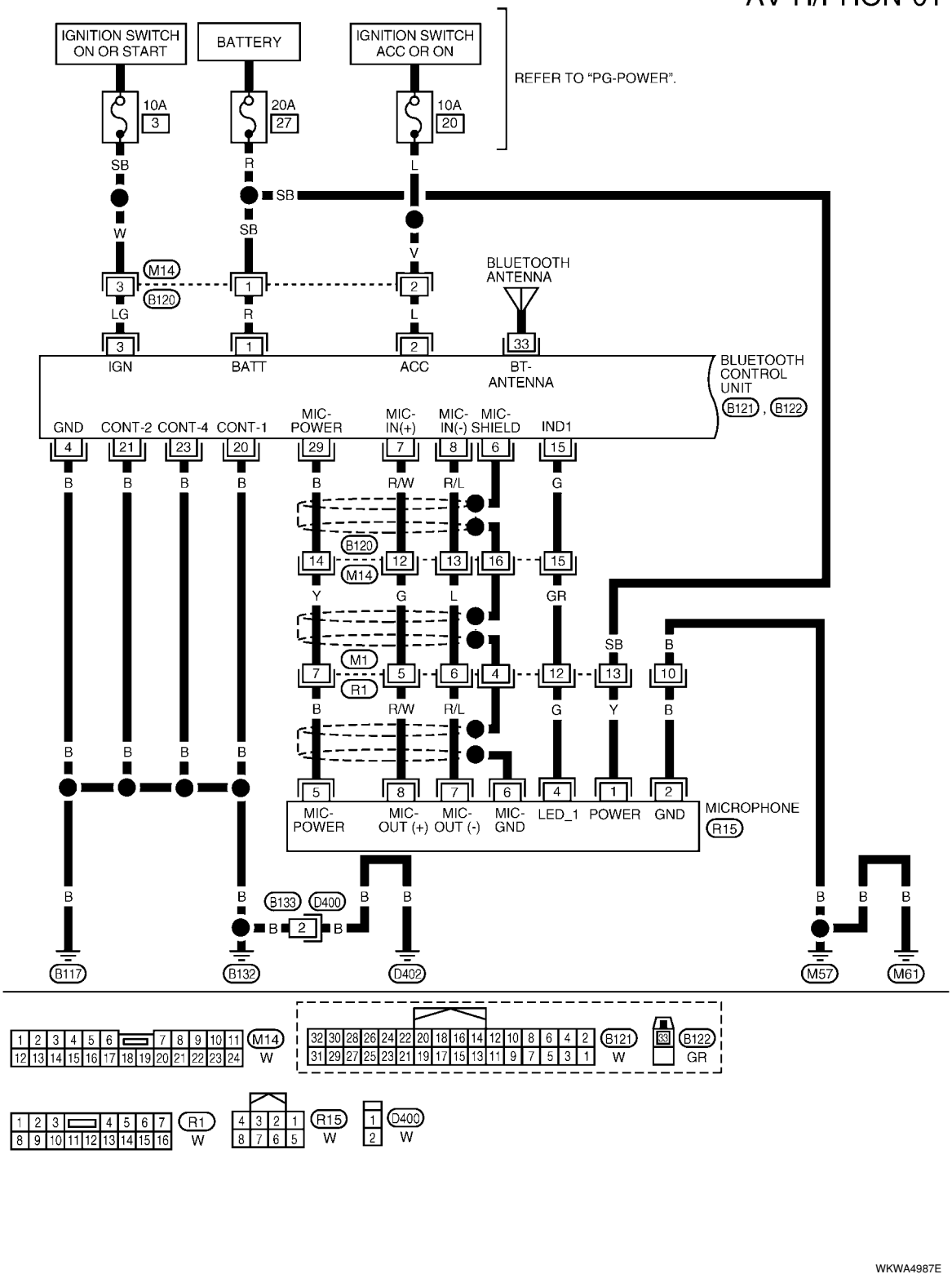

WKWA4987E

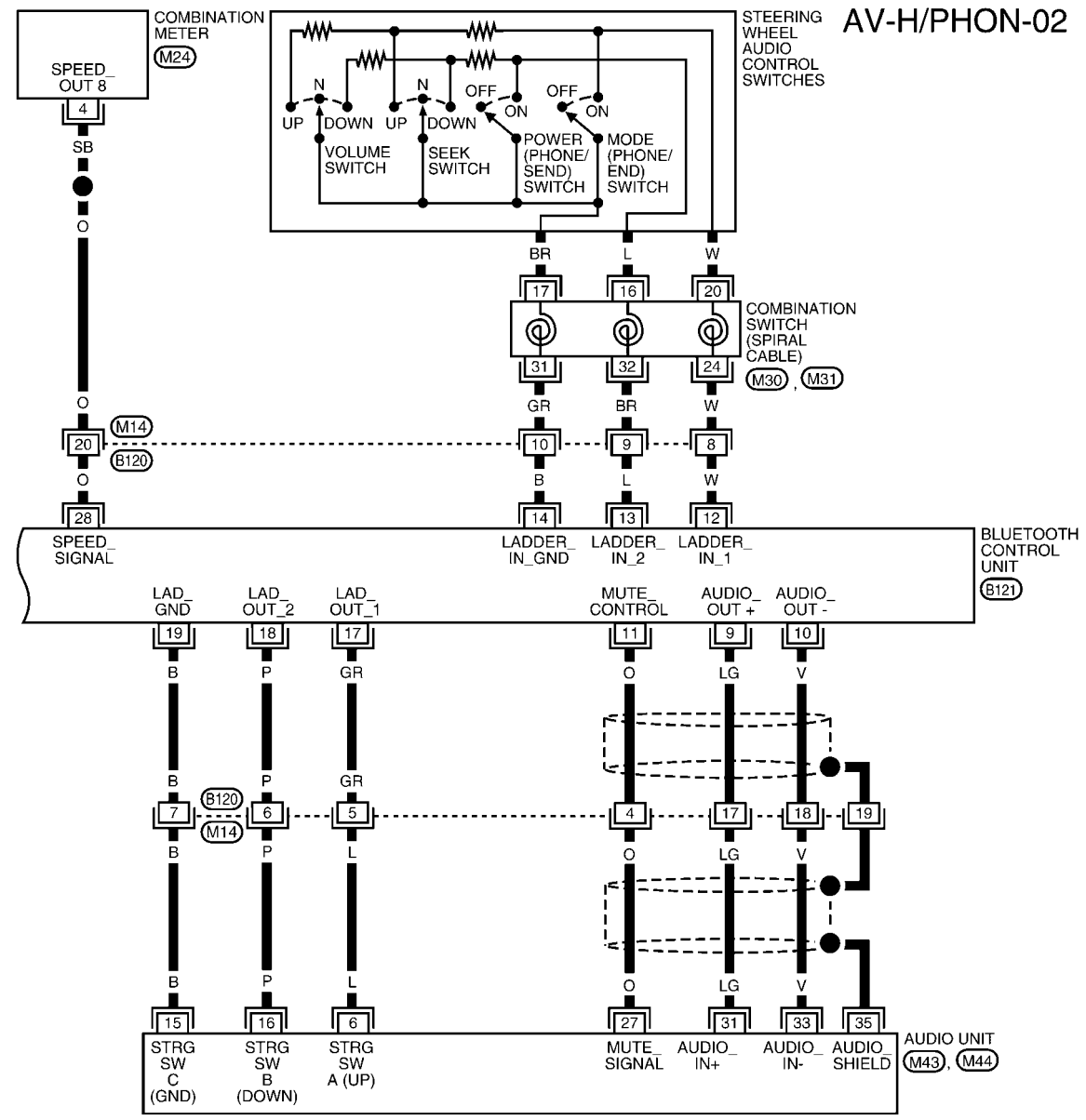

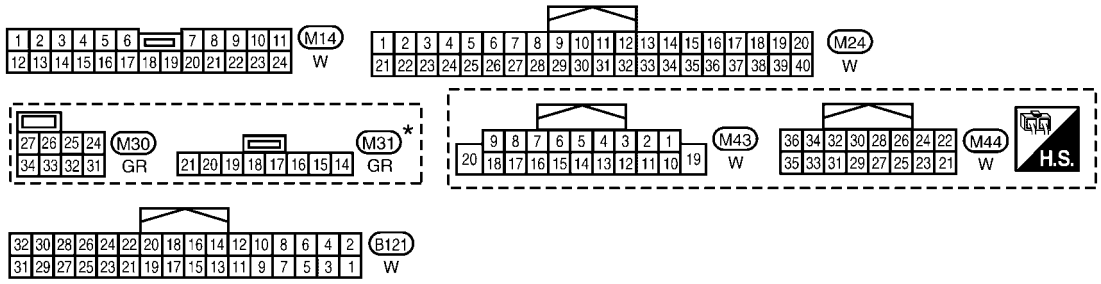

*: THIS CONNECTOR IS NOT SHOWN IN "HARNESS LAYOUT" OF PG SECTION.

WKWA4988E

Bluetooth Control Unit Harness Connector Terminal Layout

INFOID:0000000001704680

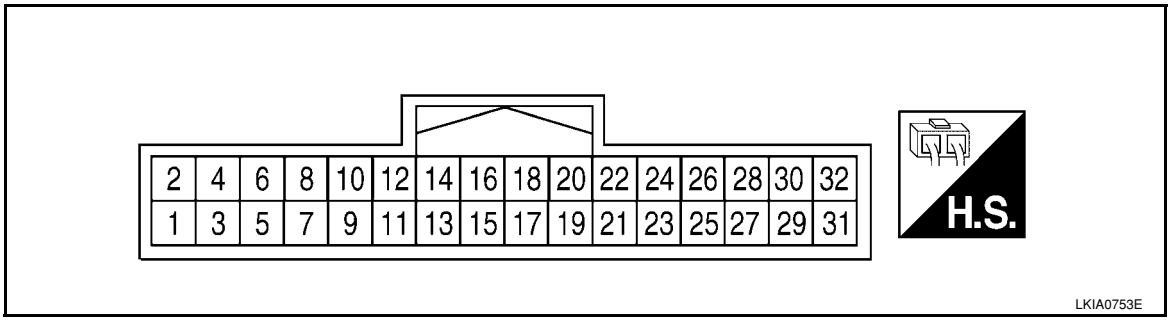

Terminal and Reference Value for Bluetooth Control Unit

INFOID:0000000001704681

Terminal (Wire color)		Item	Signal input/ output	Condition		Reference value (Approx.)	Example of symptom
+	–			Ignition switch	Operation		
1 (R)	Ground	Battery power	Input	–	–	Battery voltage	System does not work properly.
2 (L)	Ground	ACC power	Input	ACC/ ON	–	Battery voltage	System does not work properly.
3 (LG)	Ground	IGN power	Input	ON/ START	–	Battery voltage	System does not work properly.
4 (B)	–	Ground	–	–	–	–	–
6	–	Shield	–	–	–	–	–
7 (R/W)	8 (R/L)	Mic-in signal	Input	–	–	–	Bluetooth Microphone inoperative.
9 (LG)	10 (V)	Audio out	Output	ACC/ ON	Bluetooth control unit sends audio signal	(V) 1 0 -1 2ms SKIB3609E	Audio can not be heard.
11(O)	–	Mute	Output	–	–	5V	Mute inoperative.
12 (W)	Ground	Remote control switch 1	Input	ACC/ ON	Press MODE switch	0V	Steering wheel audio control switches do not function.
					Press SEEK UP switch	0.75V	
					Press VOL UP switch	2V	
					Except for above	5V	
13 (L)	Ground	Remote control switch 2	Input	ACC/ ON	Press POWER switch	0V	Steering wheel audio control switches do not function.
					Press SEEK DOWN switch	0.75V	
					Press VOL DOWN switch	2V	
					Except for above	5V	
14 (B)	–	Remote control ground	Input	–	–	–	Steering wheel audio control switches do not function.

Terminal (Wire color) +	Terminal (Wire color) –	Item	Signal input/ output	Condition: Ignition switch	Condition: Operation	Reference value (Approx.)	Example of symptom
15 (G)	Ground	Bluetooth ON indicator LED	Output	–	Bluetooth control unit initialized and paired with phone	Battery voltage	Bluetooth ON indicator inoperative.
17 (GR)	Ground	Audio unit switch 1	Output	ACC/ ON	Press Phone/End switch	0V	Steering wheel audio controls do not function.
					Press SEEK UP switch	0.75V	
					Press VOL UP switch	2V	
					Except for above	5V	
18 (P)	Ground	Audio unit switch 2	Output	ACC/ ON	Press Phone/ Send switch	0V	Steering wheel audio controls do not function.
					Press SEEK DOWN switch	0.75V	
					Press VOL DOWN switch	2V	
					Except for above	5V	
19 (B)	Ground	Audio unit switch ground	Output	–	–	–	Steering wheel audio controls do not function.
20 (B)	–	Cont-1	–	–	–	–	–
21 (B)	–	Cont-2	–	–	–	–	–
23 (B)	–	Cont-4	–	–	–	–	–
28 (O)	Ground	Vehicle speed signal (8–pulse)	Input	ON	When vehicle speed is approx. 40 km/h (25 MPH)	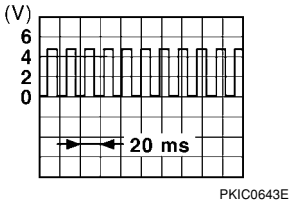	Speed sensitive volume is inoperative.
29 (B)	Ground	Bluetooth Microphone power	Output	–	–	5V	Bluetooth Microphone inoperative.
33	–	Bluetooth antenna signal	Input	–	–	–	–

Bluetooth Control Unit Self-Diagnosis Function

INFOID:0000000001704682

The Bluetooth control unit has two diagnostic checks. The first diagnostic check is performed automatically every ignition cycle during control unit initialization. The second diagnostic check is performed by the technician using the steering wheel audio control switches prior to trouble diagnosis.

BLUETOOTH CONTROL UNIT INITIALIZATION CHECKS

- Internal control unit failure
- Bluetooth antenna connection open or shorted
- Steering wheel audio control switches (SEND/END) stuck closed
- Vehicle speed pulse count
- Bluetooth Microphone connection test (with playback to operator)
- Bluetooth inquiry check

SELF-DIAGNOSIS MODE

1. Turn ignition switch to ACC or ON.
2. Wait for the Bluetooth system to complete initialization and the Bluetooth ON indicator to stop flashing. This may take up to 10 seconds.
3. Press and hold the steering wheel audio control switch SEND button for at least 5 seconds. The Bluetooth system will begin to play a verbal prompt.

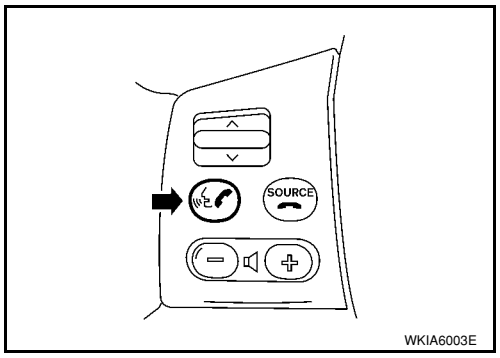

4. While the prompt is playing, momentarily press both the steering wheel audio control switches SEND and END buttons simultaneously. The Bluetooth system will sound a 5 second beep.
5. While the beep is sounding, momentarily press both the steering wheel audio control switches SEND and END buttons simultaneously again.
6. The Bluetooth system has now entered into the diagnostic mode. Results of the diagnostic checks will be verbalized to the technician and the Bluetooth ON indicator will flash. Refer to AV-49, "Workflow".
7. If there are no failure records to report, the speed pulse count will be reported next.

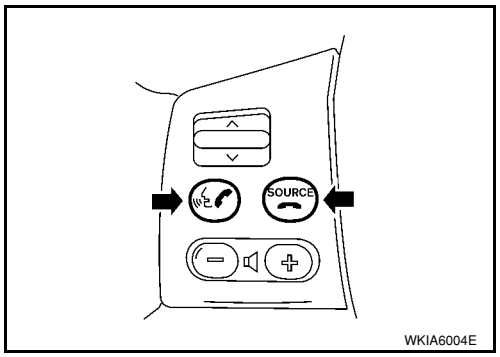

8. After the speed pulse count is reported, an interactive Bluetooth microphone test will be performed. Follow the voice prompt. If the Bluetooth microphone test fails refer to AV-49, "Workflow".
9. Self-diagnosis mode is complete when the voice prompt says "All diagnostic functions completed". A short beep is heard.

Workflow

INFOID:0000000001704683

Flashing Pattern (Bluetooth ON indicator)	Failure Message	Action
1	"Internal failure"	Replace Bluetooth control unit. Refer to AV-54, "Removal and Installation".
2	"Bluetooth antenna open"	1. Inspect harness connection. 2. Replace Bluetooth antenna. Refer to AV-54, "Removal and Installation".
3	"Bluetooth antenna shorted"	
4	"Phone/Send for the Hands Free Phone System is stuck"	Check steering wheel audio control switches. Refer to AV-27, "Steering Switch Check (With Bluetooth)".
5	"Phone/End for the Hands Free Phone System is stuck"	
–	"Bluetooth Microphone test" (failed interactive test)	1. Inspect harness between Bluetooth control unit and Bluetooth microphone. 2. Replace Bluetooth microphone. Refer to AV-54, "Removal and Installation".

Power Supply and Ground Circuit Inspection for Bluetooth Control Unit

INFOID:0000000001704684

1. CHECK FUSES

Make sure the following fuses for the Bluetooth control unit are not blown.

Terminals		Ignition Switch	Fuse No.
Connector	Terminal		
B121	1	All positions	27
	2	ACC/ON	20
	3	ON/START	3

OK or NG

OK >> GO TO 2.
NG >> If fuse is blown, be sure to eliminate cause of malfunction before installing new fuse. Refer to PG-3.

2. CHECK POWER SUPPLY CIRCUIT

1. Disconnect Bluetooth control unit connector B121.
2. Check voltage between connector terminals and ground as follows.

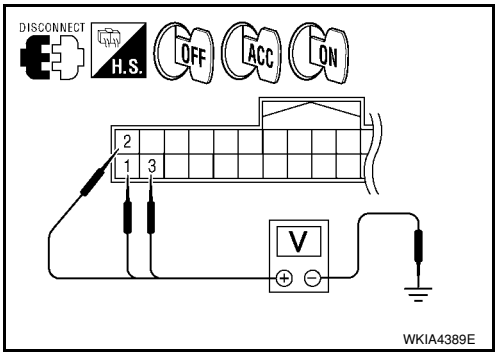

Terminals			Ignition switch position		
(+)		(–)	OFF	ACC	ON
Connector	Terminal				
B121	1	Ground	Battery voltage	Battery voltage	Battery voltage
	2		0V	Battery voltage	Battery voltage
	3		0V	0V	Battery voltage

OK or NG

OK >> GO TO 3.
NG >> Check harness for open between Bluetooth control unit and fuse.

3. CHECK GROUND CIRCUITS

1. Turn ignition switch OFF.
2. Check continuity between the following Bluetooth control unit terminals and ground.

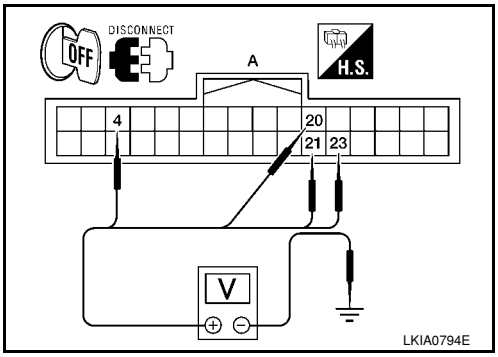

Terminals			Continuity
Connector	Terminal	—	
B121	4	Ground	Yes
	20		
	21		
	23		

OK or NG

OK >> Inspection End.
NG >> Repair or replace harness.

Basic Inspection of Hands-Free Phone

INFOID:0000000001704685

1. CHECK INDICATOR OPERATION

1. Turn ignition switch ACC.
2. Check that the indicator is blinking.

OK or NG

OK >> GO TO 2
NG >> GO TO 3

2. CHECK STEERING WHEEL AUDIO CONTROL SWITCH OPERATION

1. Press the SEND switch.
2. Check the indicator is blinking.

OK or NG

OK >> INSPECTION END
NG >> Check steering wheel audio control switch circuit.

3. CHECK BLUETOOTH INDICATOR OUTPUT VOLTAGE

1. Disconnect Bluetooth microphone connector.
2. Check voltage between Bluetooth microphone connector R15 terminal 4 and ground.

4 - Ground : Approx. 12 V

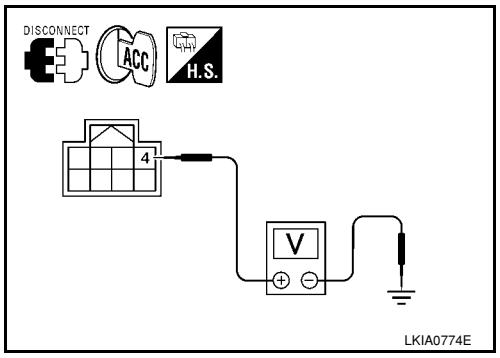

OK or NO

OK >> Replace Bluetooth indicator. Refer to AV-54, "Removal and Installation".
NG >> GO TO 4.

4. CHECK BLUETOOTH INDICATOR CIRCUIT

1. Turn ignition switch OFF.
2. Disconnect Bluetooth control unit connector B121 and Bluetooth microphone connector R15.
3. Check continuity between Bluetooth control unit connector B121 (A) terminal 15 and Bluetooth microphone connector R15 (B) terminal 4.

15 - 4 : Continuity should exist

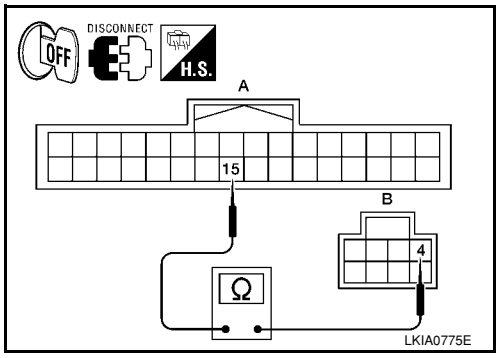

OK or NO

OK >> Replace Bluetooth control unit. Refer to AV-54, "Removal and Installation".
NG >> Repair or replace harness.

Steering Wheel Audio Control Switch Does Not Operate

INFOID:0000000001704686

1. CHECK STEERING WHEEL AUDIO CONTROL SWITCH RESISTANCE

1. Turn ignition switch OFF.
2. Disconnect steering wheel audio control switch connector.
3. Check steering wheel audio control switch. Refer to AV-27, "Steering Switch Check (With Bluetooth)".

OK or NG

OK >> GO TO 2.
NG >> Replace steering wheel audio control switch. AV-36, "Removal and Installation".

2. CHECK AUDIO UNIT

1. Turn ignition switch ON.
2. Check voltage between audio unit harness connector M43 terminals 6, 16 and ground.

6 - Ground : Approx. 5 V
16 - Ground : Approx. 5 V

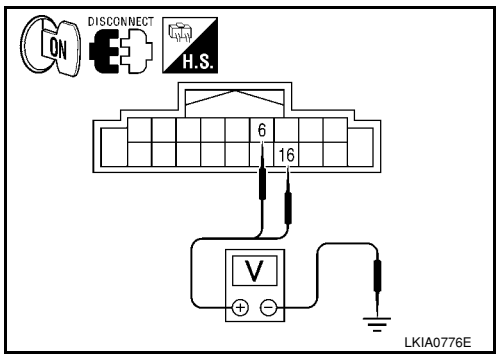

OK or NG

OK >> Replace audio unit. Refer to AV-36, "Removal and Installation".
NG >> GO TO 5.

3. CHECK BLUETOOTH CONTROL UNIT

1. Turn ignition switch ON.
2. Check voltage between Bluetooth control unit harness connector B121 terminals 17, 18 and ground.

17 - Ground : Approx. 5 V
18 - Ground : Approx. 5 V

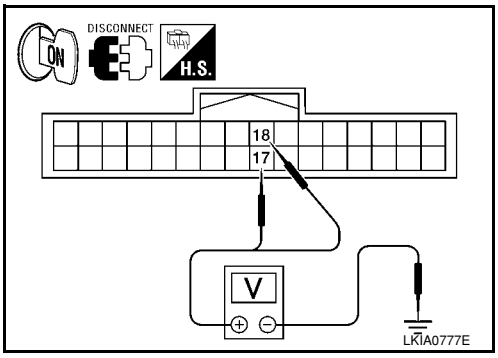

OK or NG

OK >> Repair or replace harness.
NG >> Replace Bluetooth control unit. AV-54, "Removal and Installation".

Voice Activated Control Function Does Not Operate

INFOID:0000000001704687

NOTE:
Even under the normal condition, Bluetooth voice guidance may not occur when pressing steering wheel audio control switch.

BLUETOOTH VOICE GUIDANCE IS HEARD WHEN PRESSING STEERING WHEEL AUDIO CONTROL SWITCH

1. CHECK HARNESS BETWEEN BLUETOOTH CONTROL UNIT AND BLUETOOTH MICROPHONE

1. Turn ignition switch OFF.
2. Disconnect Bluetooth control unit connector and Bluetooth microphone connector.
3. Check continuity between Bluetooth control unit connector B121 (A) and Bluetooth microphone connector R15 (B).

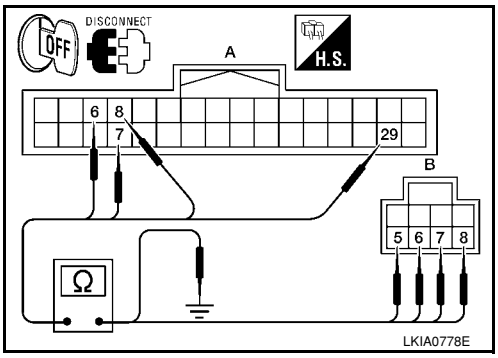

Terminals				Continuity
Connector	Terminal	Connector	Terminal	
A: B121	6	B: R15	6	Yes
	7		8	
	8		7	
	29		5	

4. Check continuity between Bluetooth control unit harness connector B121 and ground.

Terminals			Continuity
Connector	Terminal	—	
A: B121	7	Ground	No
	8		
	29		

OK or NG

OK >> GO TO 2.
NG >> Repair harness or connector.

2. CHECK BLUETOOTH MICROPHONE POWER SUPPLY

1. Connect Bluetooth control unit connector and Bluetooth microphone connector.
2. Turn ignition switch ON.

3. Check voltage between Bluetooth microphone connector R15 terminal 5 and ground.

5 - Ground : Approx. 5 V

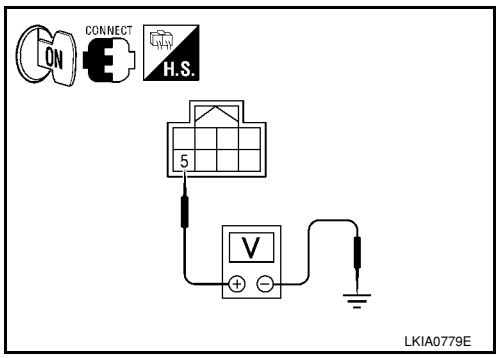

YES or NO

YES >> GO TO 3.
NO >> Replace Bluetooth control unit. Refer to AV-54, "Removal and Installation".

3. CHECK MIC. SIGNAL

1. Check signal between Bluetooth control unit harness connector B121 terminals 7 and 8.

7 – 8:

When giving a voice

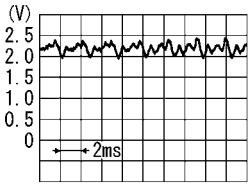

PKIB5037J

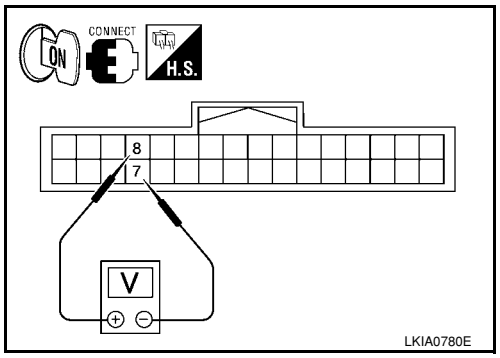

OK or NG

OK >> Replace Bluetooth control unit. Refer to AV-54, "Removal and Installation".
NG >> Replace Bluetooth microphone. Refer to AV-54, "Removal and Installation".

BLUETOOTH VOICE GUIDANCE IS NOT HEARD WHEN PRESSING STEERING WHEEL AUDIO CONTROL SWITCH

1. CHECK STEERING WHEEL AUDIO CONTROL SWITCH CIRCUIT

Refer to AV-27, "Steering Switch Check (With Bluetooth)".

OK or NG

OK >> GO TO 2.
NG >> Replace applicable parts.

2. CHECK BLUETOOTH VOICE SIGNAL CIRCUIT

1. Turn ignition switch OFF.
2. Disconnect Bluetooth control unit connector and audio unit connector.
3. Check continuity between Bluetooth control unit harness connector B121 (A) and audio unit harness connector M44 (B).

Terminals				Continuity
Connector	Terminal	Connector	Terminal	
A: B121	9	B: M44	31	Yes
	10		33	
	11		27	

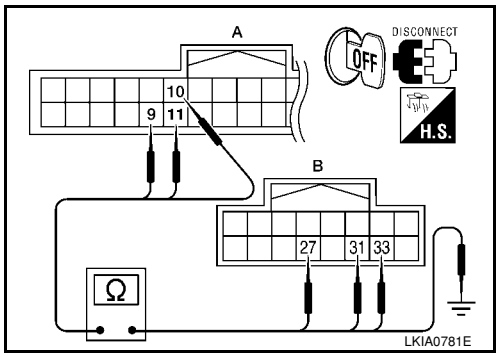

4. Check continuity between Bluetooth control unit harness connector B121 (A) and ground.

Terminals			Continuity
Connector	Terminal	—	
A: B121	9	Ground	No
	10		
	11		

OK or NG

OK >> GO TO 3.
NG >> Repair harness or connector.

3. CHECK MUTE SIGNAL

1. Connect Bluetooth control unit connector and audio unit connector.
2. Turn ignition switch ON.
3. Check voltage between Bluetooth control unit connector B121 terminal 11 and ground.

11 - Ground : Approx. 5 V

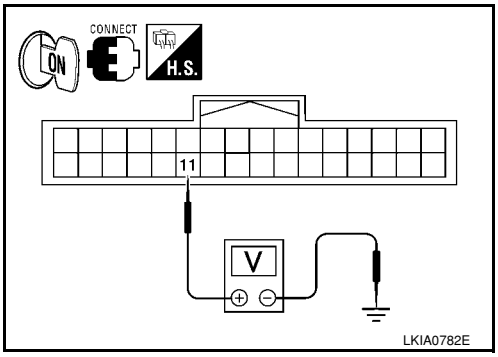

OK or NG

OK >> GO TO 4.
NG >> Replace audio unit. Refer to AV-36, "Removal and Installation".

4. CHECK BLUETOOTH VOICE SIGNAL

1. Check signal between Bluetooth control unit harness connector B121 terminals 9 and 10.

When giving a voice

9 – 10:

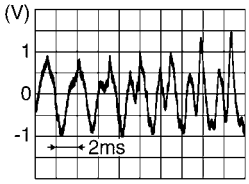

SKIB3609E

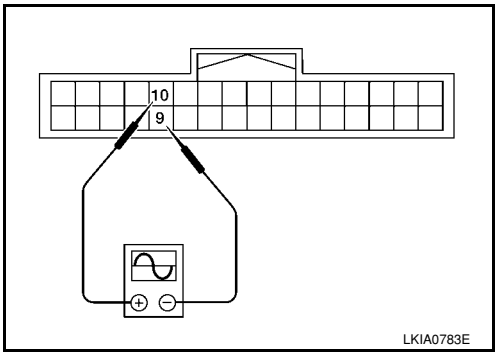

OK or NG

OK >> Replace audio unit. Refer to AV-36, "Removal and Installation".
NG >> Replace Bluetooth control unit. Refer to AV-54, "Removal and Installation".

Removal and Installation

INFOID:0000000001704688

BLUETOOTH CONTROL UNIT

Hatchback

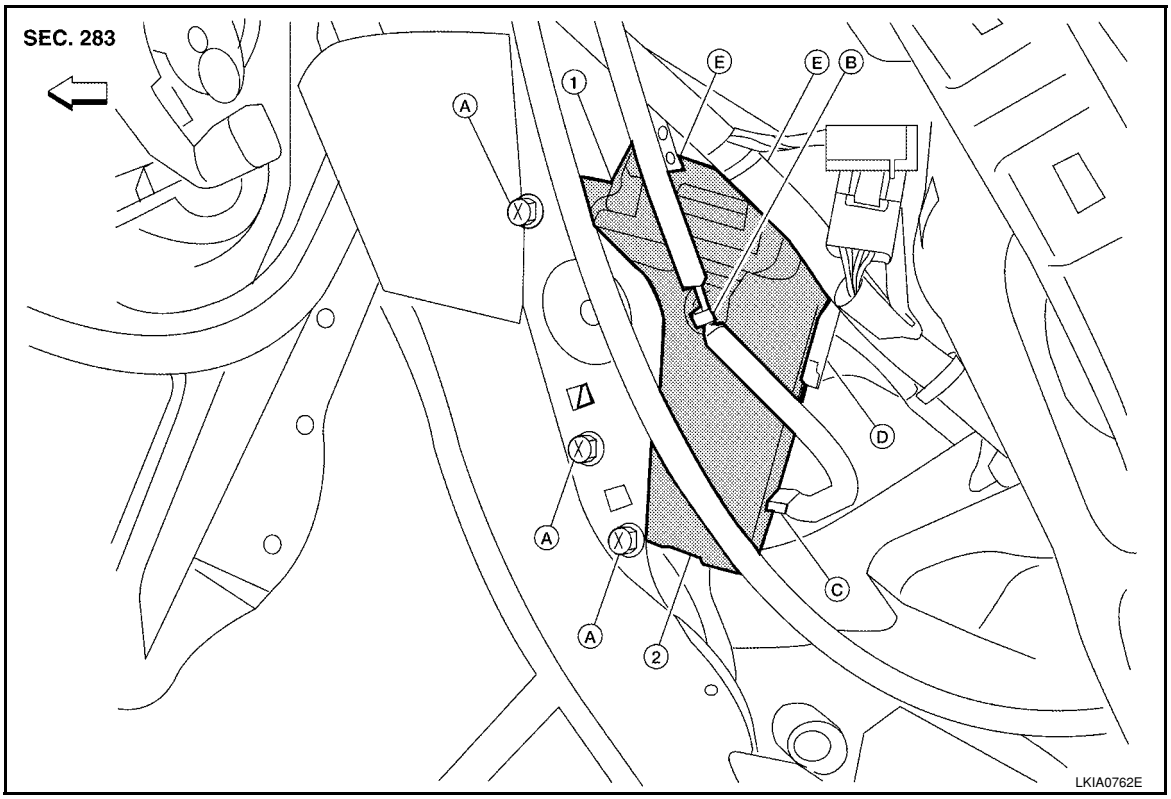

1.	Bluetooth control unit bracket	2.	Bluetooth control unit	A.	Blue tooth control unit bolts
B.	BLuetooth antenna feeder harness clip (hatchback only)	C.	Bluetooth antenna feeder harness connector	D.	Bluetooth control unit connector
E.	Bluetooth control unit bracket screws	⇐	Front		

Sedan

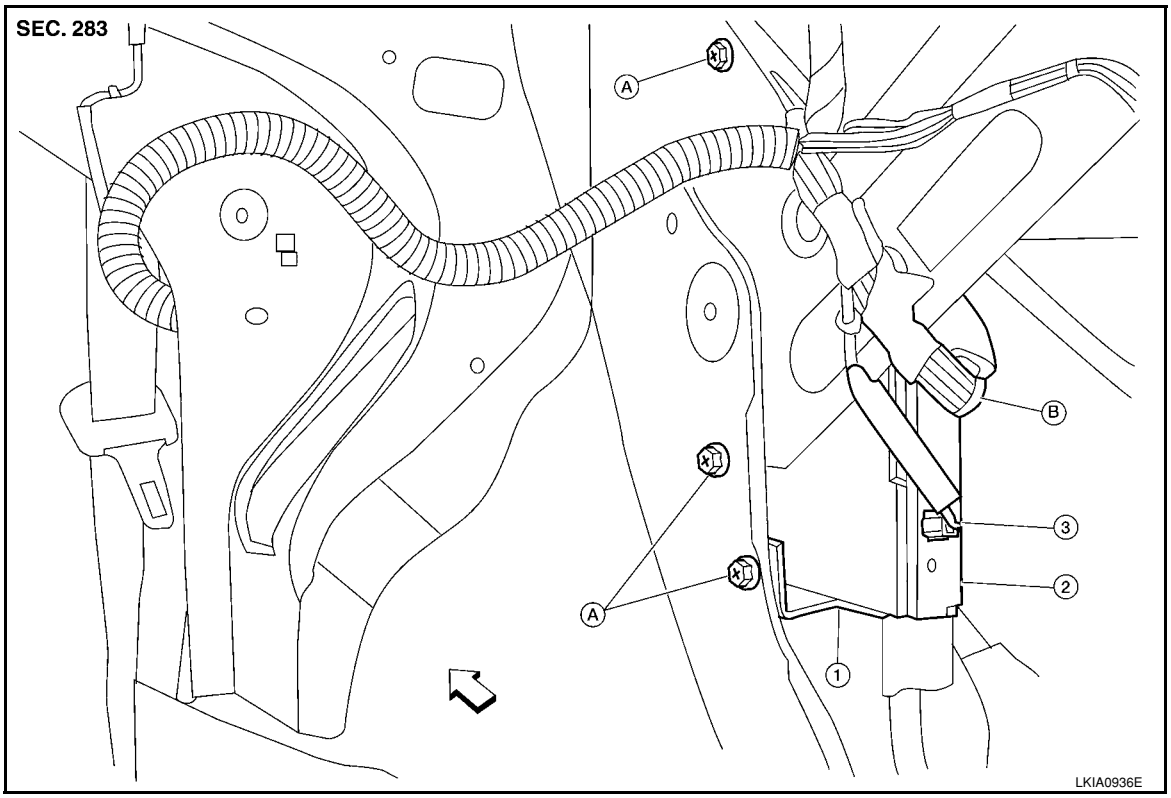

1.	Bluetooth control unit bracket	2.	Bluetooth control unit	3.	Bluetooth antenna feeder connector
A.	Bluetooth control unit bolts	B.	Bluetooth control unit connector	⇐	Front

Removal

1. For hatchback, remove luggage side lower finish (RH). Refer to EI-51, "Removal and Installation".
   - Disconnect Bluetooth antenna harness clip.
2. For sedan, remove the trunk room side finisher (RH). Refer to EI-53, "Removal and Installation".
   - Disconnect the Bluetooth antenna harness connector.
3. Disconnect the Bluetooth control unit harness connector.
4. Remove the Bluetooth control unit upper and lower bracket bolts.
5. Unhook the Bluetooth control unit upper and lower brackets and remove Bluetooth control unit.
6. Remove Bluetooth control unit bracket screws and remove the upper and lower brackets from unit.

Installation

Installation is in the reverse order of removal.

BLUETOOTH ANTENNA

Hatchback

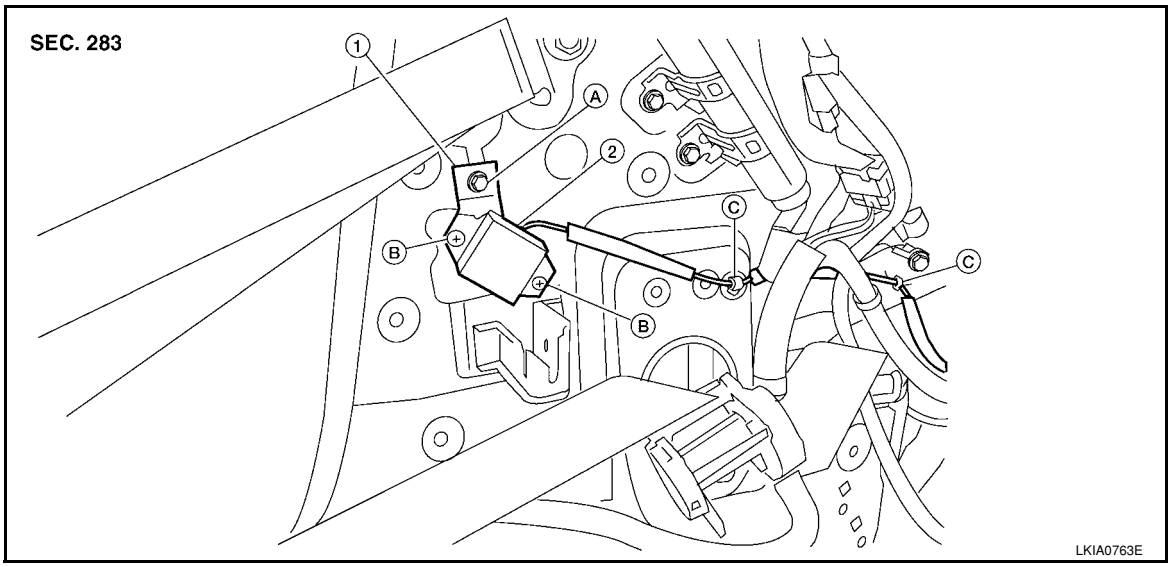

1.	Bluetooth antenna bracket	2.	Bluetooth antenna	A.	Bluetooth antenna bracket bolts
B.	Bluetooth antenna screws	C.	Bluetooth antenna feeder harness clips		

Sedan

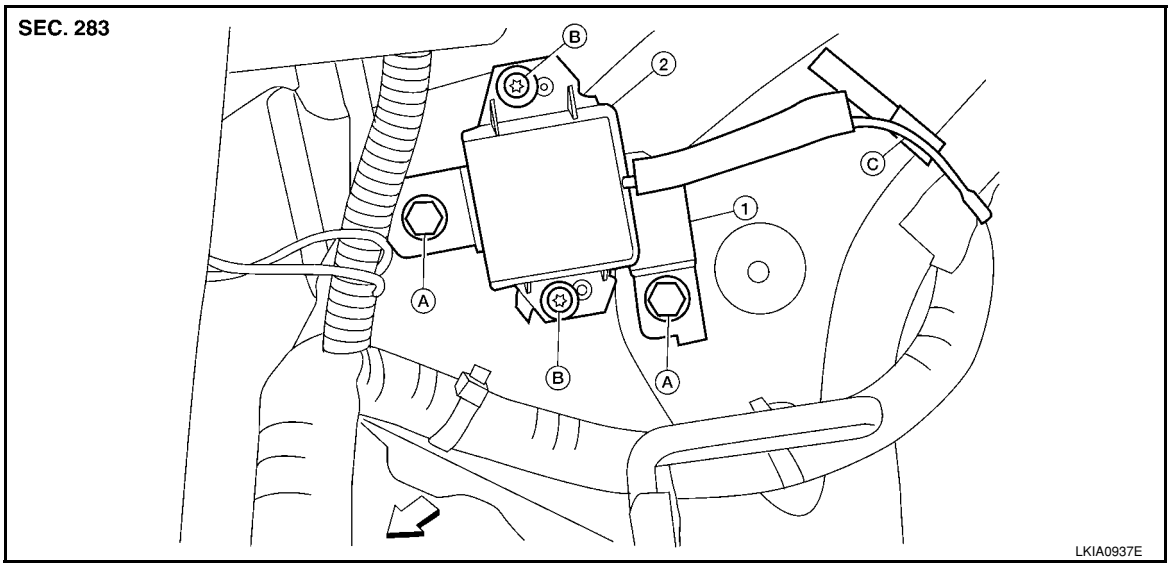

1.	Bluetooth antenna bracket	2.	Bluetooth antenna	A.	Bluetooth antenna bracket bolts
B.	Bluetooth antenna screws	C.	Bluetooth antenna feeder harness clip	⇒	Front

Removal

1. For hatchback, remove luggage side lower finisher (RH). Refer to EI-51, "Removal and Installation".
2. For sedan, fold the rear seat back down, remove the seat back finisher (RH). Refer to EI-53, "Removal and Installation".
3. Disconnect the Bluetooth antenna feeder harness clips.
4. Disconnect the Bluetooth antenna feeder harness connector.
5. Remove the Bluetooth antenna bracket bolt(s) and remove antenna.
6. Remove the Bluetooth antenna screws and remove bracket.

Installation

Installation is in the reverse order of removal.

BLUETOOTH MICROPHONE

Removal

1. Remove over-head console assembly, roof finisher. Refer to EI-45.
2. Remove the Bluetooth microphone.

Installation

Installation is in the reverse order of removal.

SECTION BCS
BODY CONTROL SYSTEM

CONTENTS

SERVICE INFORMATION 2

PRECAUTIONS 2
Precaution for Supplemental Restraint System (SRS) "AIR BAG" and "SEAT BELT PRE-TENSIONER" 2

BCM (BODY CONTROL MODULE) 3
System Description 3
CAN Communication System Description 7
Schematic 8
BCM Terminal Arrangement 10
Terminal and Reference Value for BCM 11
BCM Power Supply and Ground Circuit Inspection 15
CONSULT-III Function (BCM) 16
CAN Communication Inspection Using CONSULT-III (Self-Diagnosis) 17
Configuration 17
Removal and Installation of BCM 18

SERVICE INFORMATION

PRECAUTIONS

Precaution for Supplemental Restraint System (SRS) "AIR BAG" and "SEAT BELT PRE-TENSIONER"

INFOID:0000000001704583

The Supplemental Restraint System such as “AIR BAG” and “SEAT BELT PRE-TENSIONER”, used along with a front seat belt, helps to reduce the risk or severity of injury to the driver and front passenger for certain types of collision. This system includes seat belt switch inputs and dual stage front air bag modules. The SRS system uses the seat belt switches to determine the front air bag deployment, and may only deploy one front air bag, depending on the severity of a collision and whether the front occupants are belted or unbelted.
Information necessary to service the system safely is included in the SR and SB section of this Service Manual.

WARNING:

- **To avoid rendering the SRS inoperative, which could increase the risk of personal injury or death in the event of a collision which would result in air bag inflation, all maintenance must be performed by an authorized NISSAN/INFINITI dealer.**
- **Improper maintenance, including incorrect removal and installation of the SRS, can lead to personal injury caused by unintentional activation of the system. For removal of Spiral Cable and Air Bag Module, see the SR section.**
- **Do not use electrical test equipment on any circuit related to the SRS unless instructed to in this Service Manual. SRS wiring harnesses can be identified by yellow and/or orange harnesses or harness connectors.**

BCM (BODY CONTROL MODULE)

System Description

INFOID:0000000001704584

BCM (body control module) controls the operation of various electrical units installed on the vehicle.

BCM FUNCTION

BCM has a combination switch reading function for reading the operation of combination switches (light, wiper, washer, turn signal) in addition to the function for controlling the operation of various electrical components. Also, it functions as an interface that receives signals from the front air control, and sends signals to ECM using CAN communication.

COMBINATION SWITCH READING FUNCTION

1. Description
   - BCM reads combination switch (light, wiper) status, and controls various electrical components according to the results.
   - BCM reads information of a maximum of 20 switches by combining five output terminals (OUTPUT 1-5) and five input terminals (INPUT 1-5).
2. Operation description
   - BCM activates transistors of output terminals (OUTPUT 1-5) periodically and allows current to flow in turn.
   - If any (1 or more) of the switches are turned ON, circuit of output terminals (OUTPUT 1-5) and input terminals (INPUT 1-5) becomes active.
   - At this time, transistors of output terminals (OUTPUT 1-5) are activated to allow current to flow. When voltage of input terminals (INPUT 1-5) corresponding to that switch changes, interface in BCM detects voltage change and BCM determines that switch is ON.

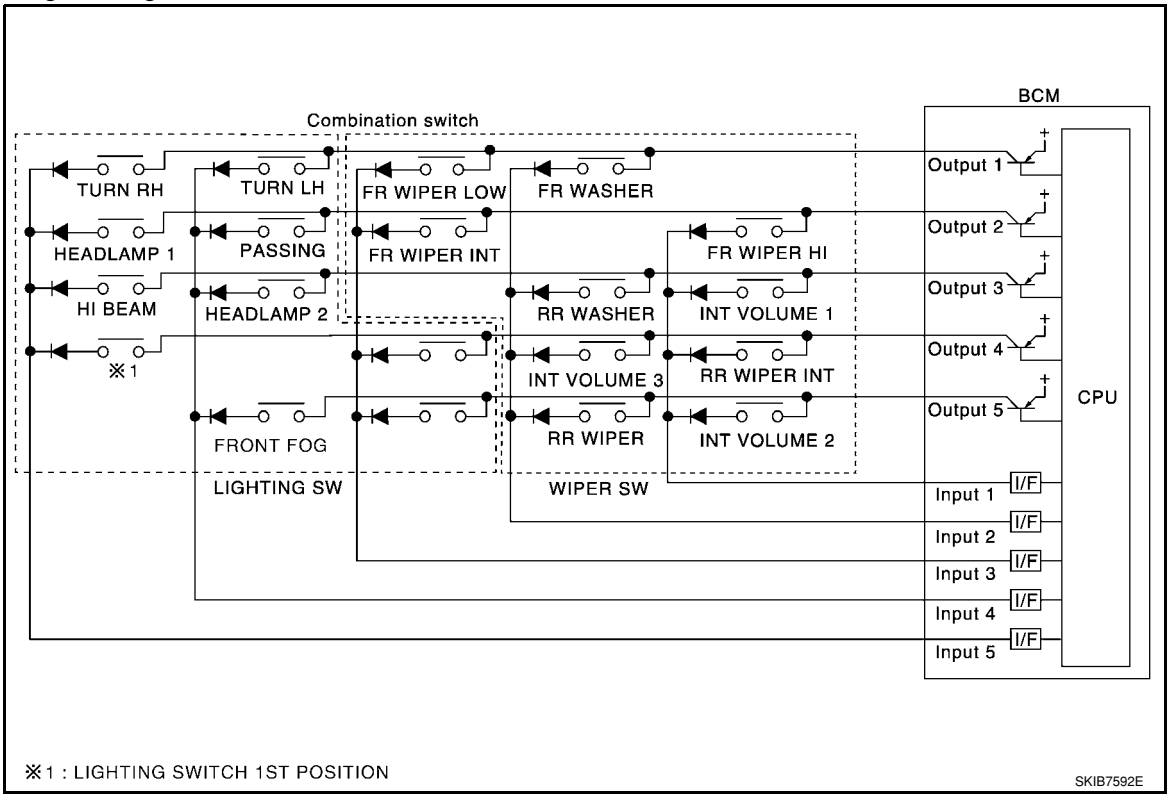

3. BCM - Operation table of combination switch
   - BCM reads operation status of combination switch by the combination shown in the following table.

	COMB SW OUTPUT 1		COMB SW OUTPUT 2		COMB SW OUTPUT 3		COMB SW OUTPUT 4		COMB SW OUTPUT 5	
	ON	OFF	ON	OFF	ON	OFF	ON	OFF	ON	OFF
COMB SW INPUT 1	–	–	FRONT WIPER HI ON	FRONT WIPER HI OFF	INT VOLUME 1 ON	INT VOLUME 1 OFF	RR WIPER INT ON	RR WIPER INT OFF	INT VOLUME 2 ON	INT VOLUME 2 OFF
COMB SW INPUT 2	FRONT WASHER ON	FRONT WASHER OFF	–	–	RR WASHER ON	RR WASHER OFF	INT VOLUME 3 ON	INT VOLUME 3 OFF	RR WIPER ON	RR WIPER OFF
COMB SW INPUT 3	FRONT WIPER LO ON	FRONT WIPER LO OFF	FRONT WIPER INT ON	FRONT WIPER INT OFF	–	–	–	–	–	–
COMB SW INPUT 4	TURN LH ON	TURN LH OFF	PASSING ON	PASSING OFF	HEAD-LAMP 2 ON	HEAD-LAMP 2 OFF	–	–	FRONT FOG ON	FRONT FOG OFF
COMB SW INPUT 5	TURN RH ON	TURN RH OFF	HEAD-LAMP 1 ON	HEAD-LAMP 1 OFF	HI BEAM ON	HI BEAM OFF	LIGHTING SW (1ST) ON	LIGHTING SW (1ST) OFF	–	–

SKIB7614E

NOTE:
Headlamp has a dual system switch.

4. Example operation: (When lighting switch 1st position is turned ON)
   - When lighting switch 1st position is turned ON, contact in combination switch turns ON. At this time if OUTPUT 4 transistor is activated, BCM detects that voltage changes in INPUT 5.
   - When OUTPUT 4 transistor is ON, BCM detects that voltage changes in INPUT 5, and judges lighting switch 1st position is ON. Then BCM sends tail lamp ON signal to IPDM E/R using CAN communication.
   - When OUTPUT 4 transistor is activated again, BCM detects that voltage changes in INPUT 5 and recognizes that lighting switch 1st position is continuously ON.

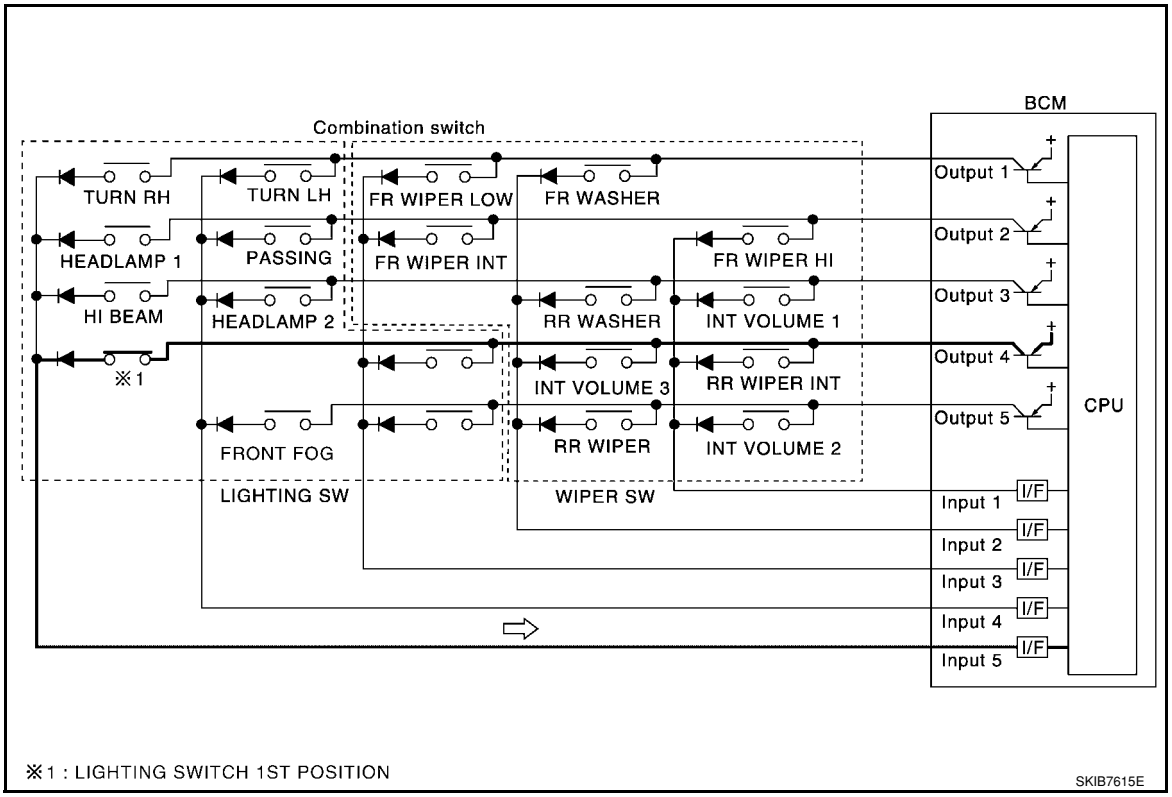

NOTE:
Each OUTPUT terminal transistor is activated at 10ms intervals. Therefore, after a switch is turned ON, electrical loads are activated with a time delay. But this time delay is so short that it cannot be noticed.

5. Operation mode
   - Combination switch reading function has operation modes as follows:

Normal status
- When BCM is not in sleep status, OUTPUT terminals (1-5) each turn ON-OFF every 10ms.

Sleep status
- When BCM is in sleep mode, transistors of OUTPUT 1 and 5 stop the output, and BCM enters low-current-consumption mode. OUTPUTS (2, 3, and 4) turn ON-OFF at 60ms intervals, and receives lighting switch input only.

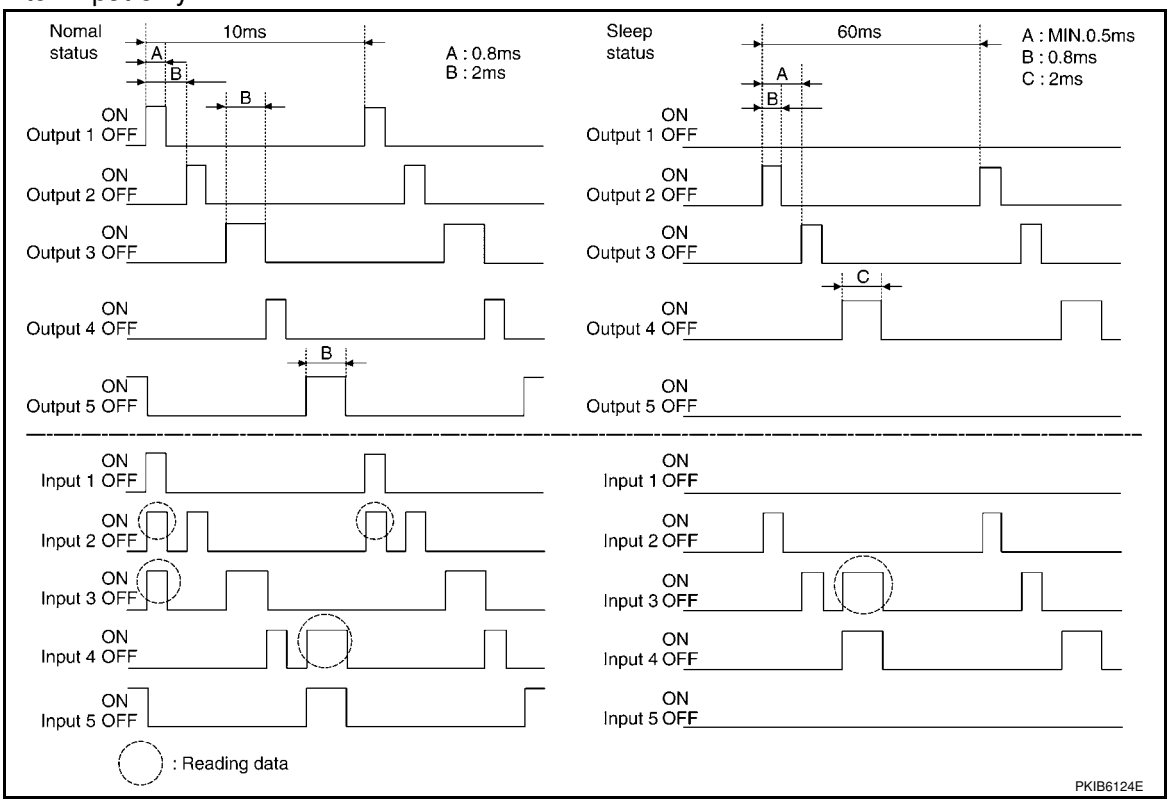

CAN COMMUNICATION CONTROL

CAN communication allows a high rate of information through the two communication lines (CAN-L, CAN-H) connecting the various control units in the system. Each control unit transmits/receives data, but selectively reads required data only.

BCM STATUS CONTROL

BCM changes its status depending on the operation status in order to save power consumption.

1. CAN communication status
   - With ignition switch ON, CAN communicates with other control units normally.
   - Control by BCM is being operated properly.
   - When ignition switch is OFF, switching to sleep mode is possible.
   - Even when ignition switch is OFF, if CAN communication with IPDM E/R and combination meter is active, CAN communication status is active.
2. Sleep transient status
   - This status shuts down CAN communication when ignition switch is turned OFF.
   - It transmits sleep request signal to IPDM E/R and combination meter.
   - Two seconds after CAN communication of all control units stops, CAN communication switches to inactive status.
3. CAN communication inactive status
   - With ignition switch OFF, CAN communication is not active.
   - With ignition switch OFF, control performed only by BCM is active.
   - Three seconds after CAN communication of all control units stops, CAN communication switches to inactive status.
4. Sleep status
   - BCM is activated with low current consumption mode.
   - CAN communication is not active.

- When CAN communication operation is detected, it switches to CAN communication status.
- When a state of the following switches changes, it switches to CAN communication state:
  - Ignition switch
  - Key switch (without Intelligent Key)
  - Key switch and ignition knob switch (with Intelligent Key)
  - Hazard switch
  - Door lock/unlock switch
  - Front door switch (LH, RH)
  - Rear door switch (LH, RH)
  - Back door lock assembly (Hatchback)
  - Trunk key cylinder switch (Sedan)
  - Trunk lamp switch and trunk release solenoid (Sedan)
  - Combination switch (passing, lighting switch 1st position, front fog lamp)
  - Keyfob (lock/unlock signal)
  - Front door key cylinder switch LH
- When control performed only by BCM is required by switch, it shifts to CAN communication inactive mode.
- Status of combination switch reading function is changed.

SYSTEMS CONTROLLED BY BCM DIRECTLY

- Power door lock system. Refer to BL-22 .
- Remote keyless entry system. Refer to BL-51 .
- Power window system. Refer to GW-18 . NOTE
- Sunroof system. Refer to RF-10. NOTE
- Room lamp timer. Refer to LT-89 .
- Rear wiper and washer system. Refer to WW-24 .

NOTE:
Power supply only. No system control.

SYSTEMS CONTROLLED BY BCM AND IPDM E/R

- Panic system. Refer to BL-51 .
- Vehicle security (theft warning) system. Refer to BL-187 .
- NVIS(NATS) system. Refer to BL-210 .
- Headlamp, tail lamp and battery saver control systems. Refer to LT-72 , LT-4 or LT-25 .
- Front fog lamp. Refer to LT-39 .
- Front wiper and washer system. Refer to WW-3 .
- Rear window defogger system. Refer to GW-49 .

SYSTEMS CONTROLLED BY BCM AND COMBINATION METER

- Warning chime. Refer to DI-41 .
- Turn signal and hazard warning lamps. Refer to LT-48 .

SYSTEMS CONTROLLED BY BCM AND INTELLIGENT KEY UNIT

- Intelligent Key system. Refer to BL-74 .

MAJOR COMPONENTS AND CONTROL SYSTEM

System	Input	Output
Remote keyless entry system	Remote keyless entry receiver (keyfob)	• All door locking actuators • Turn signal lamp (LH, RH) • Combination meter (turn signal lamp)
Intelligent Key system	Intelligent Key unit	• All door locking actuators • Turn signal lamp (LH, RH) • Combination meter (turn signal lamp)
Power door lock system	Front power door lock/unlock switch (LH, RH)	All door locking actuators
Power supply (IGN/RAP) to power window	Ignition retained power supply	Power supply to power window and sunroof system
Power supply (BAT) to power window	Battery power supply	Power supply to power window and sunroof system

System	Input	Output
Panic alarm	• Key switch • Keyfob	IPDM E/R
Vehicle security system	• All door switches • Keyfob • Door lock/unlock switch • Trunk key cylinder switch (Sedan) • Front door key cylinder switch LH	• IPDM/ER • Security indicator lamp
Battery saver control	• Ignition switch • Combination switch	IPDM E/R
Headlamp	Combination switch	IPDM E/R
Tail lamp	Combination switch	IPDM E/R
Front fog lamp	Combination switch	IPDM E/R
Turn signal lamp	Combination switch	• Turn signal lamp • Combination meter
Hazard lamp	Hazard switch	• Turn signal lamp • Combination meter
Room lamp timer	• Key switch • Keyfob • Main power window and door lock/unlock switch • Front door switch LH • All door switch	Interior room lamp
Back door switch signal (Hatchback)	Back door lock assembly	Luggage room lamp
Back door lock signal (Hatchback)	Back door lock assembly	Back door opener
Trunk lamp switch signal	Trunk lamp switch and trunk release solenoid	Luggage room lamp
Trunk lid opener signal	Trunk lamp switch and trunk release solenoid	Trunk lid opener
Key warning chime	• Key switch • Front door switch LH	Combination meter (warning buzzer)
Light warning chime	• Combination switch • Key switch • Front door switch LH	Combination meter (warning buzzer)
Seat belt warning chime	• Seat belt buckle switch LH • Ignition switch	Combination meter (warning buzzer)
Front wiper and washer system	• Combination switch • Ignition switch	IPDM E/R
Rear window defogger	Rear window defogger switch	IPDM E/R
Rear wiper and washer system	• Combination switch • Ignition switch	Rear wiper motor
A/C switch signal	Front air control	ECM
Blower fan switch signal	Front air control	ECM
A/C indicator signal	Front air control	A/C indicator
Low tire pressure warning system	Remote keyless entry receiver	Combination meter

CAN Communication System Description

INFOID:0000000001704585

Refer to LAN-6, "System Description".

Schematic

INFOID:0000000001704586

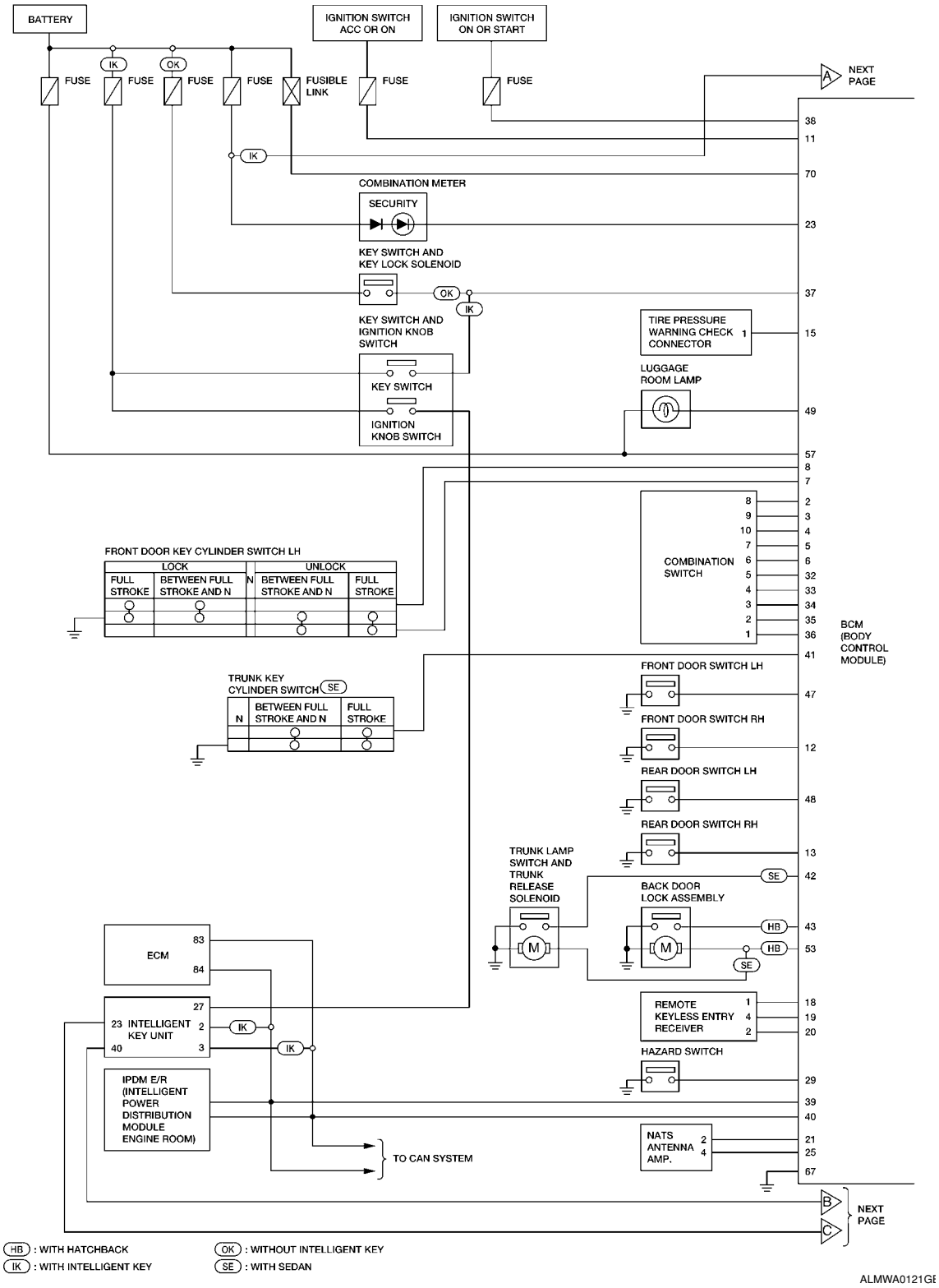

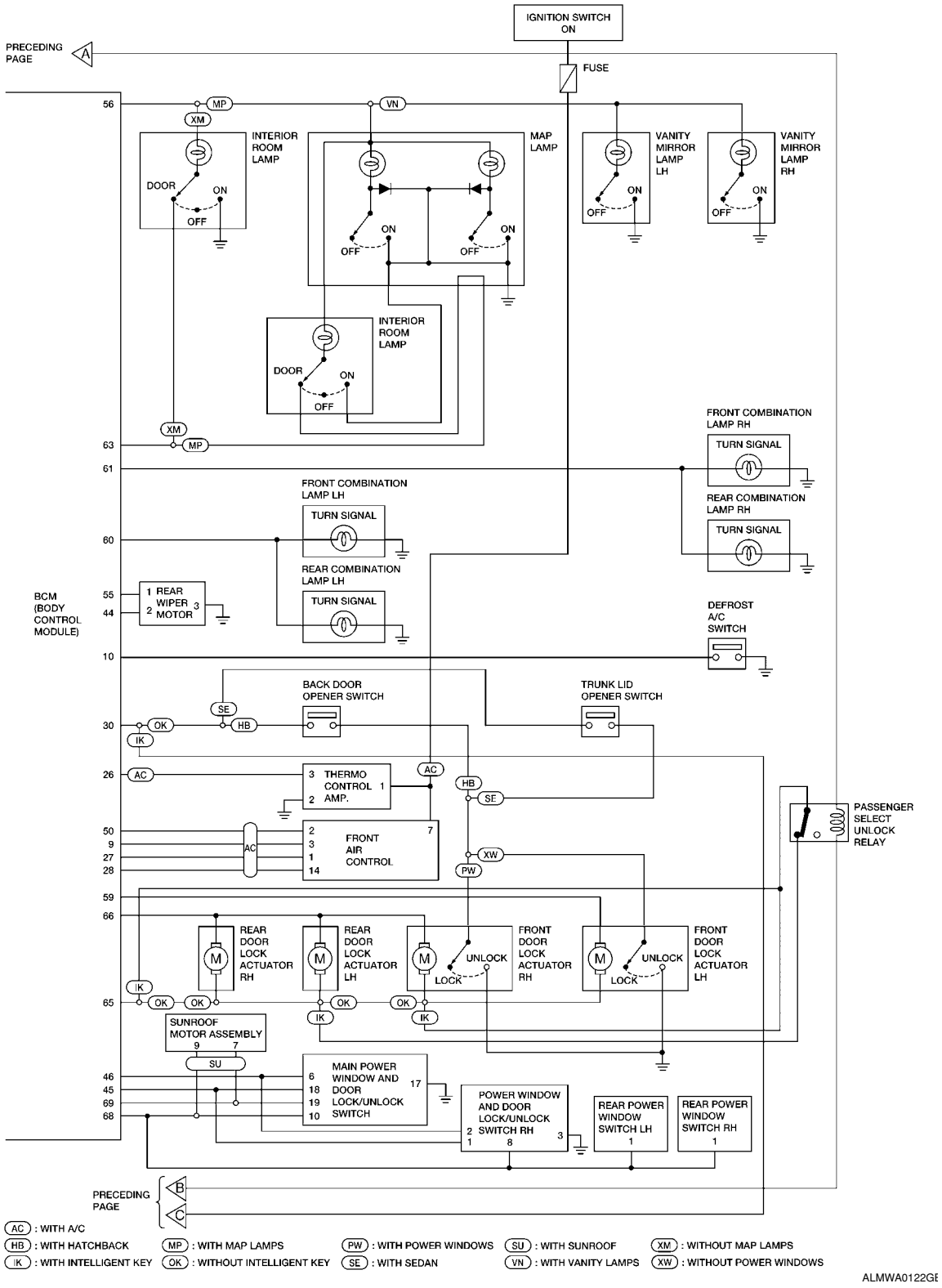
IGNITION SWITCH ON
FUSE
PRECEDING PAGE
INTERIOR ROOM LAMP
MAP LAMP
VANITY MIRROR LAMP LH
VANITY MIRROR LAMP RH
DOOR
ON
OFF
FRONT COMBINATION LAMP RH
TURN SIGNAL
FRONT COMBINATION LAMP LH
REAR COMBINATION LAMP RH
REAR COMBINATION LAMP LH
BCM (BODY CONTROL MODULE)
REAR WIPER MOTOR
DEFROST A/C SWITCH
BACK DOOR OPENER SWITCH
TRUNK LID OPENER SWITCH
THERMO CONTROL AMP.
FRONT AIR CONTROL
PASSENGER SELECT UNLOCK RELAY
REAR DOOR LOCK ACTUATOR RH
REAR DOOR LOCK ACTUATOR LH
FRONT DOOR LOCK ACTUATOR RH
FRONT DOOR LOCK ACTUATOR LH
UNLOCK
LOCK
SUNROOF MOTOR ASSEMBLY
MAIN POWER WINDOW AND DOOR LOCK/UNLOCK SWITCH
POWER WINDOW AND DOOR LOCK/UNLOCK SWITCH RH
REAR POWER WINDOW SWITCH LH
REAR POWER WINDOW SWITCH RH
AC : WITH A/C
HB : WITH HATCHBACK
IK : WITH INTELLIGENT KEY
MP : WITH MAP LAMPS
OK : WITHOUT INTELLIGENT KEY
PW : WITH POWER WINDOWS
SE : WITH SEDAN
SU : WITH SUNROOF
VN : WITH VANITY LAMPS
XM : WITHOUT MAP LAMPS
XW : WITHOUT POWER WINDOWS
ALMWA0122GE

BCM Terminal Arrangement

INFOID:0000000001704587

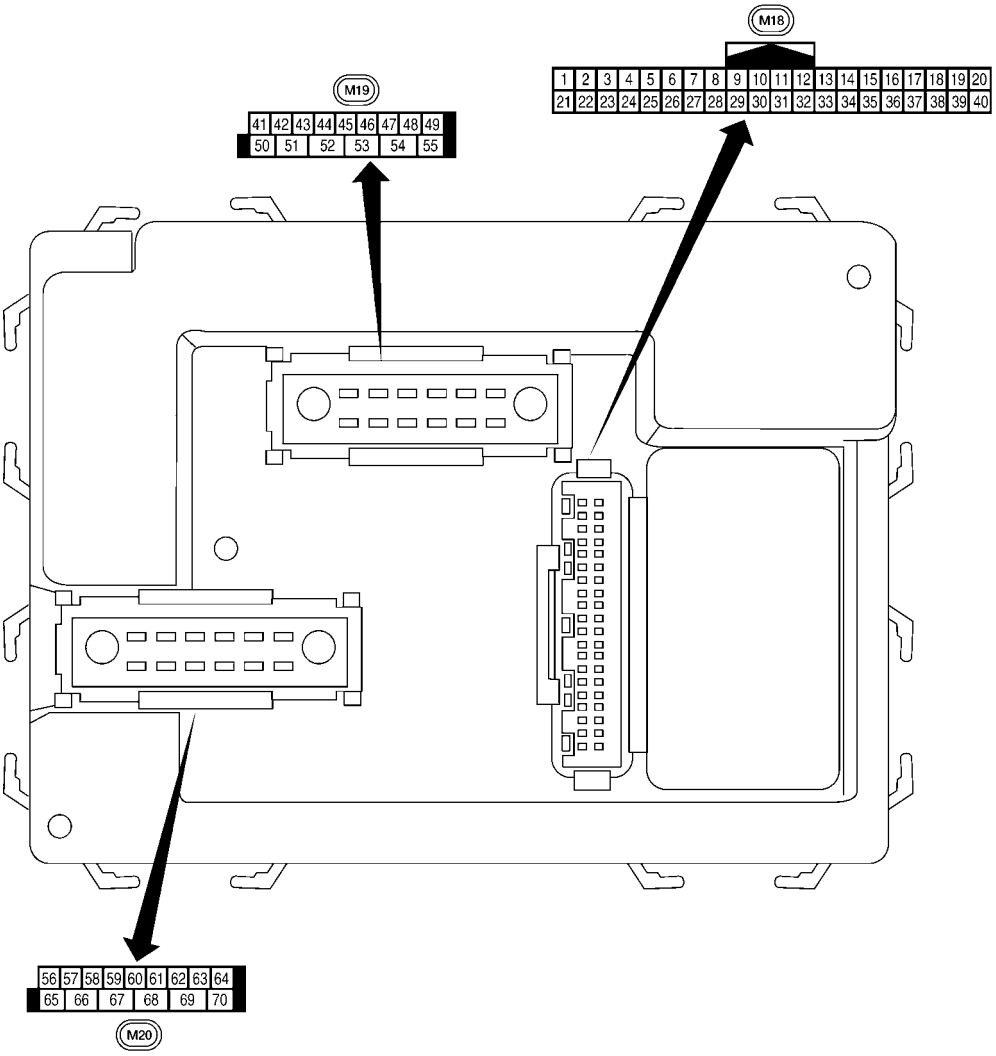

LIIA2443E

Terminal and Reference Value for BCM

INFOID:0000000001704588

Terminal	Wire color	Signal name	Signal input/ output	Measuring condition		Reference value or waveform (Approx.)
				Ignition switch	Operation or condition	
2	BR	Combination switch input 5	Input	ON	Lighting, turn, wiper OFF Wiper dial position 4	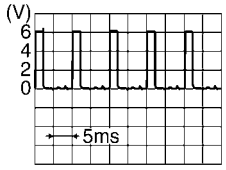 SKIA5291E
3	GR	Combination switch input 4	Input	ON	Lighting, turn, wiper OFF Wiper dial position 4	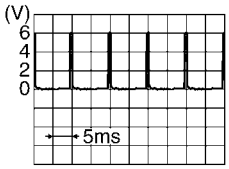 SKIA5292E
4	L	Combination switch input 3	Input	ON	Lighting, turn, wiper OFF Wiper dial position 4	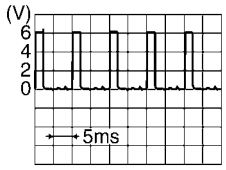 SKIA5291E
5	G	Combination switch input 2	Input	ON	Lighting, turn, wiper OFF Wiper dial position 4	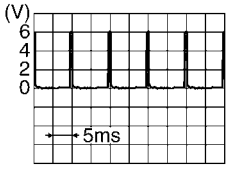 SKIA5292E
6	V	Combination switch input 1				
7	BR	Front door key cylinder switch LH (unlock)	Input	OFF	ON (open, 2nd turn)	Momentary 1.5V
					OFF (closed)	0V
8	Y	Front door key cylinder switch LH (lock)	Input		On (open)	Momentary 1.5V
					OFF (closed)	0V
9	W	Rear window defogger switch	Input	ON	Rear window defogger switch ON	0V
					Rear window defogger switch OFF	5V
11	L	Ignition switch (ACC or ON)	Input	ACC or ON	Ignition switch ACC or ON	Battery voltage
12	SB	Front door switch RH	Input	OFF	ON (open)	0V
					OFF (closed)	Battery voltage
13	GR	Rear door switch RH	Input	OFF	ON (open)	0V
					OFF (closed)	Battery voltage
15	W	Tire pressure warning check connector	Input	OFF	—	5V

Terminal	Wire color	Signal name	Signal input/ output	Measuring condition		Reference value or waveform (Approx.)
				Ignition switch	Operation or condition	
18	V	Remote keyless entry receiver (ground)	Output	OFF	—	0V
19	BR	Remote keyless entry receiver (power supply)	Output	OFF	Ignition switch OFF	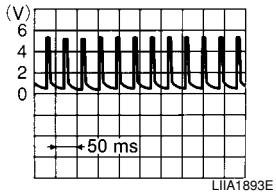
20	G	Remote keyless entry receiver signal (signal)	Input	OFF	Stand-by (keyfob buttons released)	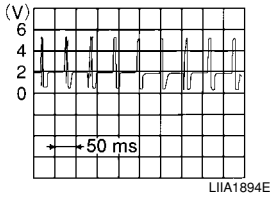
					When remote keyless entry receiver receives signal from keyfob (keyfob buttons pressed)	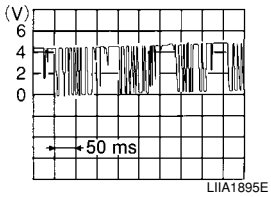
21	P	NATS antenna amp.	Input/ Output	OFF → ON	Ignition switch (OFF → ON)	Just after turning ignition switch ON: Pointer of tester should move for approx. 1 second, then return to battery voltage.
23	R	Security indicator lamp	Output	OFF	Goes OFF → illuminates (Every 2.4 seconds)	Battery voltage → 0V
25	LG	NATS antenna amp.	Input/ Output	OFF → ON	Ignition switch (OFF → ON)	Just after turning ignition switch ON: Pointer of tester should move for approx. 1 second, then return to battery voltage.
26	GR	Thermo control amp.	Input	ON	A/C switch ON	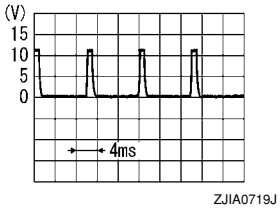
27	O	Compressor ON signal	Input	ON	A/C switch OFF	5V
					A/C switch ON	0V
28	P	Front blower monitor	Input	ON	Front blower motor OFF	Battery voltage
					Front blower motor ON	0V
29	L	Hazard switch	Input	OFF	ON	0V
					OFF	5V

Terminal	Wire color	Signal name	Signal input/ output	Measuring condition		Reference value or waveform (Approx.)
				Ignition switch	Operation or condition	
30*1	V	Back door/trunk output	Output	—	Back door open (switch closed)	0V
					Back door closed (switch open)	5V
30*2	V	Back door opener switch	Input	—	All doors locked (SW OFF)	Battery voltage
					All doors unlocked (SW ON)	0V
30*3	V	Trunk lid opener switch	Input	—	All doors locked (SW OFF)	Battery voltage
					All doors unlocked (SW ON)	0V
32	LG	Combination switch output 5	Output	ON	Lighting, turn, wiper OFF Wiper dial position 4	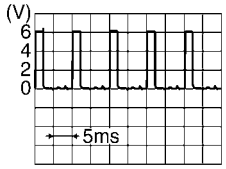 SKIA5291E
33	Y	Combination switch output 4	Output	ON	Lighting, turn, wiper OFF Wiper dial position 4	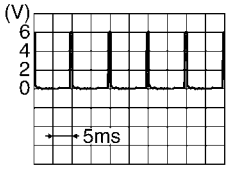 SKIA5292E
34	V	Combination switch output 3	Output	ON	Lighting, turn, wiper OFF Wiper dial position 4	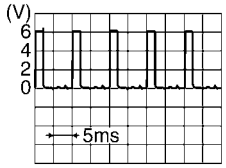 SKIA5291E
35	R	Combination switch output 2	Output	ON	Lighting, turn, wiper OFF Wiper dial position 4	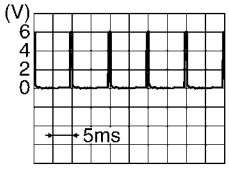 SKIA5292E
36	P	Combination switch output 1				
37	G	Key switch	Input	OFF	Key inserted	Battery voltage
					Key removed	0V
38	W	Ignition switch (ON)	Input	ON	—	Battery voltage
39	L	CAN-H	—	—	—	—
40	P	CAN-L	—	—	—	—
41*5	W	Trunk key cylinder switch	Input	—	ON (Full unlock position)	0V
					OFF (Neutral position)	5V
42	Y	Trunk lamp switch	Input	OFF	ON (trunk open)	0V
					OFF (trunk closed)	Battery voltage
43	R	Back door switch	Input	OFF	ON (open)	0V
					OFF (closed)	Battery voltage

Terminal	Wire color	Signal name	Signal input/ output	Measuring condition		Reference value or waveform (Approx.)
				Ignition switch	Operation or condition	
44	LG	Rear wiper auto stop	Input	ON	Rear wiper operating	0
					Rear wiper stopped	Battery
45	GR	Lock switch	Input	OFF	ON (lock)	0V
					OFF	Battery voltage
46	L	Unlock switch	Input	OFF	ON (unlock)	0V
					OFF	Battery voltage
47	BR	Front door switch LH	Input	OFF	ON (open)	0V
					OFF (closed)	Battery voltage
48	O	Rear door switch LH	Input	OFF	ON (open)	0V
					OFF (closed)	Battery voltage
49	P	Luggage room lamp	Output	OFF	Any door open (ON)	0V
					All doors closed (OFF)	Battery voltage
50	SB	A/C indicator	Output	ON	A/C OFF	0
					A/C ON	Battery voltage
53*4	R	Back door lock assembly (actuator)	Output	OFF	Back door (open)	Battery voltage
53*5	R	Trunk lamp switch and trunk release solenoid	Output	OFF	Trunk lid (open)	Battery voltage
55	V	Rear wiper motor output	Output	ON	OFF	0
					ON	Battery voltage
56	R	Battery saver output	Output	OFF	30 minutes after ignition switch is turned OFF	0V
				ON	—	Battery voltage
57	LG	Battery power supply	Input	OFF	—	Battery voltage
59	G	Front door lock actuator LH (unlock)	Output	OFF	OFF (neutral)	0V
					ON (unlock)	Battery voltage
60	V	Turn signal (left)	Output	ON	Turn left ON	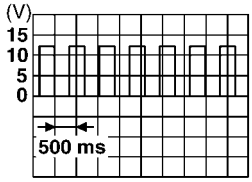 SKIA3009J
61	W	Turn signal (right)	Output	ON	Turn right ON	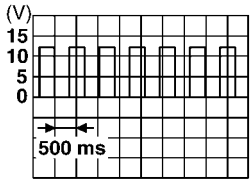 SKIA3009J
63	BR	Interior room lamp	Output	OFF	Any door switch: ON (open)	0V
					Any door switch: OFF (closed)	Battery voltage
65	SB	All door lock actuators (lock)	Output	OFF	OFF (neutral)	0V
					ON (lock)	Battery voltage

Terminal	Wire color	Signal name	Signal input/ output	Measuring condition		Reference value or waveform (Approx.)
				Ignition switch	Operation or condition	
66	G	Front door lock actuator RH, rear door lock actuators LH/RH (unlock)	Output	OFF	OFF (neutral)	0V
					ON (unlock)	Battery voltage
67	B	Ground	Input	ON	—	0V
68	L	Power window power supply (RAP)	Output	—	Ignition switch ON	Battery voltage
					Within 45 seconds after ignition switch OFF	Battery voltage
					More than 45 seconds after ignition switch OFF	0V
					When front door LH or RH is open or power window timer operates	0V
69	P	Battery power supply	Output	OFF	—	Battery voltage
70	Y	Battery power supply	Input	OFF	—	Battery voltage

*1: With Intelligent Key
*2: Hatchback without Intelligent Key
*3: Sedan without Intelligent Key
*4: Hatchback
*5: Sedan

BCM Power Supply and Ground Circuit Inspection

INFOID:0000000001704589

1. CHECK FUSES AND FUSIBLE LINK

- Check 40A fusible link (letter **g** , located in the fuse and fusible link box).
- Check 10A fuses [No. 6, 8 and 20, located in the fuse block (J/B)].

OK or NG

OK >> GO TO 2.
NG >> If fuse is blown, be sure to eliminate cause of malfunction before installing new fuse. Refer to PG-3 .

2. CHECK BCM POWER SUPPLY CIRCUIT

1. Turn ignition switch OFF.
2. Disconnect BCM.
3. Check voltage between BCM connectors and ground.

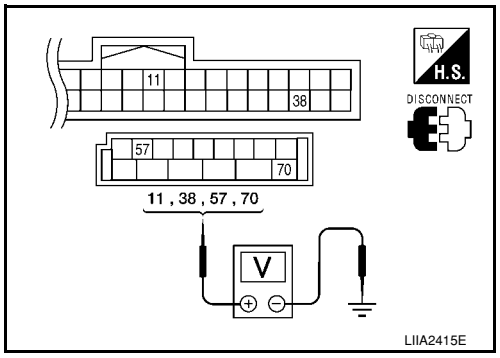

Connector	Terminals		Power source	Condition	Voltage (V) (Approx.)
	(+)	(-)			
M18	11	Ground	ACC power supply	Ignition switch ACC or ON	Battery voltage
	38	Ground	Ignition power supply	Ignition switch ON or START	Battery voltage
M20	57	Ground	Battery power supply	Ignition switch OFF	Battery voltage
	70	Ground	Battery power supply	Ignition switch OFF	Battery voltage

OK or NG

OK >> GO TO 3.
NG >> Repair or replace the harness.

3.CHECK GROUND CIRCUIT

Check continuity between BCM connector M20 terminal 67 and ground.

67 - Ground : Continuity should exist.

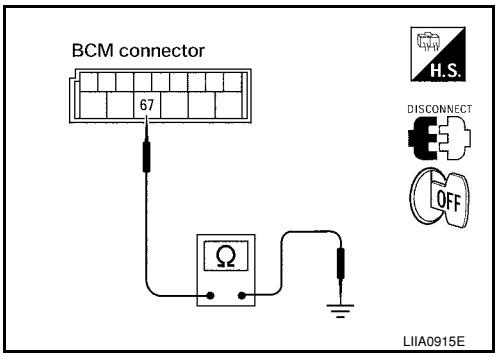

OK or NG

OK >> Power supply and ground circuit is OK.
NG >> Repair or replace harness.

CONSULT-III Function (BCM)

INFOID:0000000001704590

CONSULT-III can display each diagnostic item using the diagnostic test modes shown following.

BCM diagnostic test item	Diagnostic mode	Content
Inspection by part	WORK SUPPORT	Supports inspections and adjustments. Commands are transmitted to the BCM for setting the status suitable for required operation, input/output signals are received from the BCM and received data is displayed.
	DATA MONITOR	Displays BCM input/output data in real time.
	ACTIVE TEST	Operation of electrical loads can be checked by sending drive signal to them.
	SELF-DIAG RESULTS	Displays BCM self-diagnosis results.
	CAN DIAG SUPPORT MNTR	The results of transmit/receive diagnosis of CAN communication can be read.
	ECU PART NUMBER	BCM part number can be read.
	CONFIGURATION	Performs BCM configuration read/write functions.

ITEMS OF EACH PART

NOTE:
CONSULT-III will only display systems the vehicle possesses.

System and item	CONSULT-III display	Diagnostic test mode (Inspection by part)						
		WORK SUPPORT	SELF–DIAG RESULTS	CAN DIAG SUPPORT MNTR	DATA MONITOR	ECU PART NUMBER	ACTIVE TEST	CONFIGURATION
BCM	BCM	×	×	×		×		×
Power door lock system	DOOR LOCK	×			×		×	
Rear defogger	REAR DEFOGGER				×		×	
Warning chime	BUZZER				×		×	
Room lamp timer	INT LAMP	×			×		×	
Remote keyless entry system	MULTI REMOTE ENT	×			×		×	
Headlamp	HEAD LAMP	×			×		×	
Wiper	WIPER	×			×		×	
Turn signal lamp Hazard lamp	FLASHER				×		×	

System and item	CONSULT-III display	Diagnostic test mode (Inspection by part)						
		WORK SUPPORT	SELF–DIAG RESULTS	CAN DIAG SUPPORT MNTR	DATA MONITOR	ECU PART NUMBER	ACTIVE TEST	CONFIGURATION
Blower fan switch signal Air conditioner switch signal	AIR CONDITIONER				×			
Intelligent Key	INTELLIGENT KEY				×			
Combination switch	COMB SW				×			
NVIS (NATS)	IMMU				×		×	
Interior lamp battery saver	BATTERY SAVER	×			×		×	
Back door/Trunk	TRUNK				×		×	
Theft alarm	THEFT ALARM	×			×		×	
Retained accessory power control	RETAINED PWR	×			×		×	
Oil pressure switch	SIGNAL BUFFER				×		×	
Low tire pressure monitor	AIR PRESSURE MONITOR	×	×		×		×	
Panic alarm	PANIC ALARM						×	

WORK SUPPORT

Display Item List

Item	Description
RESET SETTING VALUE	Return a value set with WORK SUPPORT of each system to a default value in factory shipment.

CAN Communication Inspection Using CONSULT-III (Self-Diagnosis)

INFOID:0000000001704591

1.SELF-DIAGNOSTIC RESULT CHECK

1. Connect CONSULT–III and select “BCM” on “SELECT SYSTEM” screen.
2. Select “BCM” on “SELECT TEST ITEM” screen, and select “SELF-DIAG RESULTS”.
3. Check display content in self-diagnostic results.

CONSULT-III display code	Diagnosis item
U1000	INITIAL DIAG
	TRANSMIT DIAG
	ECM
	IPDM E/R
	METER/M&A
	I-KEY

Contents displayed

No malfunction>>Inspection End

Malfunction in CAN communication system>>After printing the monitor items, go to “CAN System”. Refer to LAN-15, "Trouble Diagnosis Flow Chart".

Configuration

INFOID:0000000001806223

DESCRIPTION

CONFIGURATION has three functions as follows:

- READ CONFIGURATION is the function to read (extract) vehicle configuration of current BCM.

- WRITE CONFIGURATION-Manual selection is the function to select and write vehicle configuration on BCM manually.
- WRITE CONFIGURATION-Config file is the function to write vehicle configuration with the data extracted from current BCM.
- For READ CONFIGURATION and WRITE CONFIGURATION-Config file, refer to CONSULT-III Operation Manual.
- For WRITE CONFIGURATION-Manual selection using the following flow chart, identify the correct model and configuration list. Confirm and/or change setting value for each item according to the configuration list. Depending on CONSULT-III software version being used, some or all of the write configuration items shown in the following configuration lists may be displayed. If an item does not appear on the CONSULT-III WRITE CONFIGURATION-Manual selection screen(s), then it is an auto setting item and it cannot be manually set or changed.
  NOTE:
  Confirm vehicle model on IDENTIFICATION PLATE. Refer to GI-43, "Model Variation".

ITEM	SET VAL
KEYLESS ENTRY	WITH ⇔ WITHOUT
I-KEY	WITH ⇔ WITHOUT
DTRL	WITH ⇔ WITHOUT
THEFT ALARM	WITH ⇔ WITHOUT

CAUTION:
- **When replacing BCM, you must perform WRITE CONFIGURATION with CONSULT-III.**
- **Complete the procedure of WRITE CONFIGURATION in order.**
- **If you set incorrect WRITE CONFIGURATION, incidents will occur.**
- **Configuration is different for each vehicle model. Confirm configuration of each vehicle model.**

Removal and Installation of BCM

INFOID:0000000001704593

REMOVAL

1. Remove the glove box. Refer to IP-11, "Removal and Installation".
2. Remove the BCM screws, disconnect the connectors and remove the BCM (1).

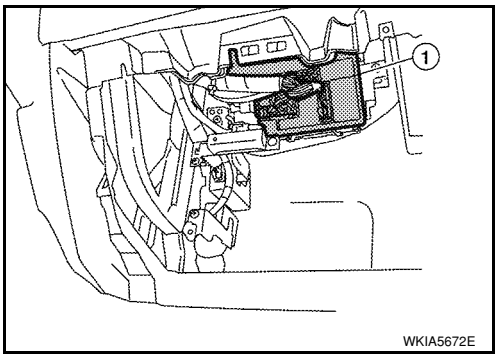

INSTALLATION

Installation is in the reverse order of removal.
NOTE:
- When replacing BCM, it must be configured. Refer to BCS-17, "Configuration".
- When replacing BCM, perform initialization of NATS system and registration of all NATS ignition key IDs. Refer to BL-210.
- When replacing BCM, if new BCM does not come with keyfobs attached, all existing keyfobs must be re-registered.

SECTION BL
BODY, LOCK & SECURITY SYSTEM

CONTENTS

SERVICE INFORMATION 4

PRECAUTIONS 4
Precaution for Supplemental Restraint System (SRS) "AIR BAG" and "SEAT BELT PRE-TENSIONER" 4
Precaution Necessary for Steering Wheel Rotation After Battery Disconnect 4
Precaution for Procedure without Cowl Top Cover.....5
Precaution for Work 5

PREPARATION 6
Special Service Tool 6
Commercial Service Tool 6

SQUEAK AND RATTLE TROUBLE DIAGNOSES 7
Work Flow 7
Generic Squeak and Rattle Troubleshooting 9
Diagnostic Worksheet 11

HOOD 13
Fitting Adjustment 13
Removal and Installation 14
Removal and Installation of Hood Lock Control 15
Hood Lock Control Inspection 17

RADIATOR CORE SUPPORT 19
Removal and Installation 19

FRONT FENDER 21
Removal and Installation 21

POWER DOOR LOCK SYSTEM 22
Component Parts and Harness Connector Location 22
System Description 22
CAN Communication System Description 24
Schematic 25
Wiring Diagram - D/LOCK - 26
Schematic 30
Wiring Diagram - D/LOCK - 31
Terminal and Reference Value for BCM 35
Work Flow 35
CONSULT-III Function (BCM) 36
Trouble Diagnosis Symptom Chart 37
BCM Power Supply and Ground Circuit 37
Door Switch Check (Hatchback) 37
Door Switch Check (Sedan) 40
Key Switch (Insert) Check 41
Door Lock and Unlock Switch Check 42
Front Door Lock Assembly LH (Actuator) Check 45
Door Lock Actuator Check (Front RH and Rear LH/RH) 46
Front Door Key Cylinder Switch LH Check 47
Passenger Select Unlock Relay Circuit Inspection (With Intelligent Key) 48

REMOTE KEYLESS ENTRY SYSTEM 51
Component Parts and Harness Connector Location 51
System Description 51
CAN Communication System Description 53
Schematic 54
Wiring Diagram - KEYLES - 55
Terminal and Reference Value for BCM 57
How to Perform Trouble Diagnosis 57
Preliminary Check 58
CONSULT-III Function (BCM) 58
Work Flow 59
Trouble Diagnosis Symptom Chart 60
Keyfob Battery and Function Check 61
ACC Switch Check 62
Door Switch Check (Hatchback) 62
Door Switch Check (Sedan) 65
Key Switch (Insert) Check 66
Hazard Function Check 67
Horn Function Check 67
Interior Lamp and Ignition Keyhole Illumination Function Check 68
Remote Keyless Entry Receiver Check 68
Keyfob Function (Lock) Check 71
Keyfob Function (Unlock) Check 71

ID Code Entry Procedure 71
Keyfob Battery Replacement 73
Removal and Installation of Remote Keyless Entry Receiver 73

INTELLIGENT KEY SYSTEM 74
Component Parts and Harness Connector Location 74
System Description 76
CAN Communication System Description 83
Schematic 84
Wiring Diagram - I/KEY - 86
Intelligent Key Unit Harness Connector Terminal Layout 96
Terminal and Reference Value for Intelligent Key Unit 96
Steering Lock Solenoid Harness Connector Terminal Layout 98
Terminal and Reference Value for Steering Lock Solenoid 98
Terminal and Reference Value for BCM 99
Trouble Diagnosis Procedure 99
CONSULT-III Functions (INTELLIGENT KEY) 100
CONSULT-III Application Item 101
Trouble Diagnosis Symptom Chart 103
CAN Communication System Inspection 109
Power Supply and Ground Circuit Inspection 110
Key Switch (Intelligent Key Unit Input) Check 110
Key Switch (BCM Input) Check 112
Ignition Knob Switch Check 113
Door Switch Check (Hatchback) 114
Door Switch Check (Sedan) 117
Door Request Switch Check 118
Back Door Request Switch Check (Hatchback) ...120
Trunk Opener Request Switch Check (Sedan) 122
Unlock Sensor Check 124
Intelligent Key Warning Buzzer(s) Check 125
Outside Key Antenna (Driver Side and Passenger Side) Check 126
Outside Key Antenna (Rear Bumper) Check 128
Inside Key Antenna Check 129
Steering Lock Solenoid Check 131
Key Interlock Solenoid (With M/T) Check 133
Ignition Switch Position Check 134
Stop Lamp Switch Check (With CVT) 134
Stop Lamp Switch Check (With M/T) 135
Check CVT Device (Park Position Switch) Check.136
"P-SHIFT" Warning Lamp (With CVT) Check 138
"LOCK" Warning Lamp (With M/T) Check 138
"KEY" Warning Lamp (RED) Check 139
"KEY" Warning Lamp (GREEN) Check 139
Check Warning Chime in Combination Meter 140
Hazard Function Check 140
Horn Function Check 140
Headlamp Function Check 141
Intelligent Key Battery Replacement 142
Remote Keyless Entry Function 142
Removal and Installation of Intelligent Key Unit ...142

DOOR 144
Fitting Adjustment 144
Removal and Installation 147

FRONT DOOR LOCK 150
Component Parts Location 150
Removal and Installation 150

REAR DOOR LOCK 153
Component Parts Location 153
Removal and Installation 153

BACK DOOR LOCK 156
Component Parts and Harness Connector Location 156
System Description 156
Wiring Diagram - B/DOOR - 157
Terminal and Reference Value for BCM 158
Terminal and Reference Value for Intelligent Key Unit 158
CONSULT-III Function (BCM) 159
Work Flow 159
Trouble Diagnosis Chart by Symptom 159
BCM Power Supply and Ground Circuit 160
Check Back Door Opener Switch Circuit (Without Intelligent Key or Power Windows) 160
Check Back Door Opener Switch Circuit (Without Intelligent Key, with Power Windows) 162
Check Back Door Opener Switch Circuit (With Intelligent Key) 165
Check Back Door Lock Assembly (Actuator) Circuit 166
Removal and Installation 168

TRUNK LID 170
Fitting Adjustment 170
Trunk Lid Assembly 170
Trunk Lid Lock 171
Trunk Lid Striker 171

TRUNK LID OPENER 173
Component Parts and Harness Connector Location 173
System Description 173
Wiring Diagram - TLID - 174
Terminal and Reference Value for BCM 175
Terminal and Reference Value for Intelligent Key Unit 175
CONSULT-III Function (BCM) 176
Work Flow 176
Trouble Diagnosis Chart by Symptom 176
BCM Power Supply and Ground Circuit 177
Check Trunk Lid Opener Switch Circuit (Without Intelligent Key or Power Windows) 177
Check Trunk Lid Opener Switch Circuit (Without Intelligent Key, with Power Windows) 179
Check Trunk Lid Opener Switch Circuit (With Intelligent Key) 182
Check Trunk Release Solenoid Circuit 183

FUEL FILLER LID OPENER **186**
Removal and Installation of Fuel Filler Lid Opener. 186

VEHICLE SECURITY (THEFT WARNING) SYSTEM **187**
Component Parts and Harness Connector Location 187
System Description 188
CAN Communication System Description 190
Schematic 191
Wiring Diagram - VEHSEC - 192
Terminal and Reference Value for BCM 195
Terminal and Reference Value for Intelligent Key Unit 195
CONSULT-III Function (BCM) 196
Trouble Diagnosis 197
Preliminary Check 197
Symptom Chart 199
Diagnosis Procedure 1 200
Diagnosis Procedure 2 203
Diagnosis Procedure 3 204
Diagnosis Procedure 4 204
Diagnosis Procedure 5 204
Diagnosis Procedure 6 204
Diagnosis Procedure 7 204
Diagnosis Procedure 8 206
Diagnosis Procedure 9 207

NATS (Nissan Anti-Theft System) **210**
Component Parts and Harness Connector Location 210
System Description 210
System Composition 211
ECM Re-communicating Function 211
Wiring Diagram - NATS - 213
Terminal and Reference Value for BCM 213
CONSULT-III Function 213
Trouble Diagnosis Procedure 215
Trouble Diagnosis 217
Diagnosis Procedure 1 218
Diagnosis Procedure 2 220
Diagnosis Procedure 3 221
Diagnosis Procedure 4 222
Diagnosis Procedure 5 223
How to Replace NATS Antenna Amp 224

BODY REPAIR **225**
Body Exterior Paint Color 225
Body Component Parts 227
Corrosion Protection 232
Body Sealing 236
Body Construction 242
Body Alignment 244
Handling Precaution for Plastics 261
Precaution in Repairing High Strength Steel 265
Foam Repair 268
Replacement Operation 271

SERVICE INFORMATION

PRECAUTIONS

Precaution for Supplemental Restraint System (SRS) "AIR BAG" and "SEAT BELT PRE-TENSIONER"

INFOID:0000000001703938

The Supplemental Restraint System such as “AIR BAG” and “SEAT BELT PRE-TENSIONER”, used along with a front seat belt, helps to reduce the risk or severity of injury to the driver and front passenger for certain types of collision. This system includes seat belt switch inputs and dual stage front air bag modules. The SRS system uses the seat belt switches to determine the front air bag deployment, and may only deploy one front air bag, depending on the severity of a collision and whether the front occupants are belted or unbelted.
Information necessary to service the system safely is included in the SRS and SB section of this Service Manual.

WARNING:

- **To avoid rendering the SRS inoperative, which could increase the risk of personal injury or death in the event of a collision which would result in air bag inflation, all maintenance must be performed by an authorized NISSAN/INFINITI dealer.**
- **Improper maintenance, including incorrect removal and installation of the SRS, can lead to personal injury caused by unintentional activation of the system. For removal of Spiral Cable and Air Bag Module, see the SRS section.**
- **Do not use electrical test equipment on any circuit related to the SRS unless instructed to in this Service Manual. SRS wiring harnesses can be identified by yellow and/or orange harnesses or harness connectors.**

Precaution Necessary for Steering Wheel Rotation After Battery Disconnect

INFOID:0000000001703939

NOTE:

- This procedure is applied only to models with Intelligent Key system and NVIS/IVIS (NISSAN/INFINITI VEHICLE IMMOBILIZER SYSTEM - NATS).
- Remove and install all control units after disconnecting both battery cables with the ignition in the ″LOCK″ position.
- Always use CONSULT-III to perform self-diagnosis as a part of each function inspection after finishing work. If DTC is detected, perform trouble diagnosis according to self-diagnostic results.

For models equipped with the Intelligent Key system and NVIS/IVIS, an electrically controlled steering lock mechanism is adopted on the key cylinder.
For this reason, if the battery is disconnected or if the battery is discharged, the steering wheel will lock and steering wheel rotation will become impossible.
If steering wheel rotation is required when battery power is interrupted, follow the procedure below before starting the repair operation.

OPERATION PROCEDURE

1. Connect both battery cables.
   NOTE:
   Supply power using jumper cables if battery is discharged.
2. Use the Intelligent Key or mechanical key to turn the ignition switch to the ″ACC″ position. At this time, the steering lock will be released.
3. Disconnect both battery cables. The steering lock will remain released and the steering wheel can be rotated.
4. Perform the necessary repair operation.
5. When the repair work is completed, return the ignition switch to the ″LOCK″ position before connecting the battery cables. (At this time, the steering lock mechanism will engage.)
6. Perform a self-diagnosis check of all control units using CONSULT-III.

Precaution for Procedure without Cowl Top Cover

INFOID:0000000001703940

When performing the procedure after removing cowl top cover, cover the lower end of windshield.

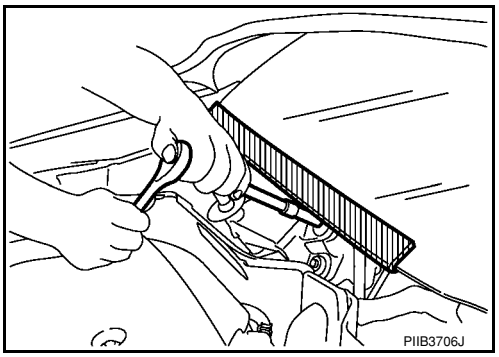

Precaution for Work

INFOID:0000000001703941

- After removing and installing the opening/closing parts, be sure to carry out fitting adjustments to check their operation.
- Check the lubrication level, damage, and wear of each part. If necessary, grease or replace it.

PREPARATION

Special Service Tool

INFOID:0000000001703942

Tool number (Kent-Moore No.) Tool name		Description
— (J-39570) Chassis ear	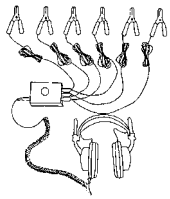 SIIA0993E	Locating the noise
— (J-43980) NISSAN Squeak and Rattle Kit	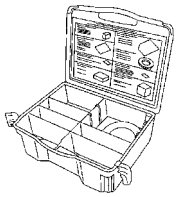 SIIA0994E	Repairing the cause of noise
— (J-43241) Remote Keyless Entry Tester	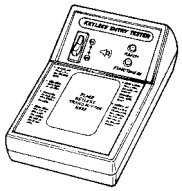 LEL946A	Used to test key fobs

Commercial Service Tool

INFOID:0000000001703943

Tool name		Description
Engine ear	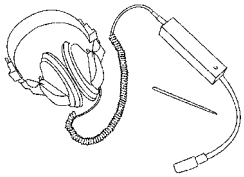 SIIA0995E	Locating the noise

SQUEAK AND RATTLE TROUBLE DIAGNOSES

Work Flow

INFOID:0000000001703944

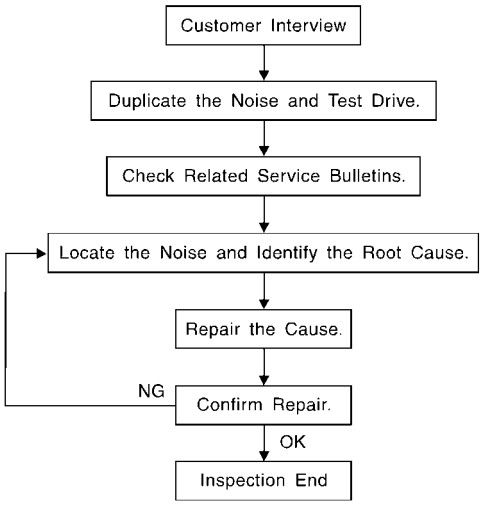

SBT842

CUSTOMER INTERVIEW

Interview the customer if possible, to determine the conditions that exist when the noise occurs. Use the Diagnostic Worksheet during the interview to document the facts and conditions when the noise occurs and any customer's comments; refer to BL-11, "Diagnostic Worksheet". This information is necessary to duplicate the conditions that exist when the noise occurs.

- The customer may not be able to provide a detailed description or the location of the noise. Attempt to obtain all the facts and conditions that exist when the noise occurs (or does not occur).
- If there is more than one noise in the vehicle, be sure to diagnose and repair the noise that the customer is concerned about. This can be accomplished by test driving the vehicle with the customer.
- After identifying the type of noise, isolate the noise in terms of its characteristics. The noise characteristics are provided so the customer, service adviser and technician are all speaking the same language when defining the noise.
- Squeak —(Like tennis shoes on a clean floor)
  Squeak characteristics include the light contact/fast movement/brought on by road conditions/hard surfaces = higher pitch noise/softer surfaces = lower pitch noises/edge to surface = chirping.
- Creak—(Like walking on an old wooden floor)
  Creak characteristics include firm contact/slow movement/twisting with a rotational movement/pitch dependent on materials/often brought on by activity.
- Rattle—(Like shaking a baby rattle)
  Rattle characteristics include the fast repeated contact/vibration or similar movement/loose parts/missing clip or fastener/incorrect clearance.
- Knock —(Like a knock on a door)
  Knock characteristics include hollow sounding/sometimes repeating/often brought on by driver action.
- Tick—(Like a clock second hand)
  Tick characteristics include gentle contacting of light materials/loose components/can be caused by driver action or road conditions.
- Thump—(Heavy, muffled knock noise)
  Thump characteristics include softer knock/dead sound often brought on by activity.
- Buzz—(Like a bumble bee)
  Buzz characteristics include high frequency rattle/firm contact.
- Often the degree of acceptable noise level will vary depending upon the person. A noise that you may judge as acceptable may be very irritating to the customer.
- Weather conditions, especially humidity and temperature, may have a great effect on noise level.

DUPLICATE THE NOISE AND TEST DRIVE

If possible, drive the vehicle with the customer until the noise is duplicated. Note any additional information on the Diagnostic Worksheet regarding the conditions or location of the noise. This information can be used to duplicate the same conditions when you confirm the repair.

If the noise can be duplicated easily during the test drive, to help identify the source of the noise, try to duplicate the noise with the vehicle stopped by doing one or all of the following:
1) Close a door.
2) Tap or push/pull around the area where the noise appears to be coming from.
3) Rev the engine.
4) Use a floor jack to recreate vehicle “twist”.
5) At idle, apply engine load (electrical load, half-clutch on M/T model, drive position on A/T model).
6) Raise the vehicle on a hoist and hit a tire with a rubber hammer.

- Drive the vehicle and attempt to duplicate the conditions the customer states exist when the noise occurs.
- If it is difficult to duplicate the noise, drive the vehicle slowly on an undulating or rough road to stress the vehicle body.

CHECK RELATED SERVICE BULLETINS

After verifying the customer concern or symptom, check ASIST for Technical Service Bulletins (TSBs) related to that concern or symptom.
If a TSB relates to the symptom, follow the procedure to repair the noise.

LOCATE THE NOISE AND IDENTIFY THE ROOT CAUSE

1. Narrow down the noise to a general area.To help pinpoint the source of the noise, use a listening tool (Chassis Ear: J-39570, Engine Ear: J-39565 and mechanic's stethoscope).
2. Narrow down the noise to a more specific area and identify the cause of the noise by:

- removing the components in the area that you suspect the noise is coming from.
  Do not use too much force when removing clips and fasteners, otherwise clips and fasteners can be broken or lost during the repair, resulting in the creation of new noise.
- tapping or pushing/pulling the component that you suspect is causing the noise.
  Do not tap or push/pull the component with excessive force, otherwise the noise will be eliminated only temporarily.
- feeling for a vibration with your hand by touching the component(s) that you suspect is (are) causing the noise.
- placing a piece of paper between components that you suspect are causing the noise.
- looking for loose components and contact marks.
  Refer to BL-9, "Generic Squeak and Rattle Troubleshooting".

REPAIR THE CAUSE

- If the cause is a loose component, tighten the component securely.
- If the cause is insufficient clearance between components:
- separate components by repositioning or loosening and retightening the component, if possible.
- insulate components with a suitable insulator such as urethane pads, foam blocks, felt cloth tape or urethane tape. A NISSAN Squeak and Rattle Kit (J-43980) is available through your authorized NISSAN Parts Department.

CAUTION:
Do not use excessive force as many components are constructed of plastic and may be damaged.
Always check with the Parts Department for the latest parts information.
The following materials are contained in the NISSAN Squeak and Rattle Kit (J-43980). Each item can be ordered separately as needed.
URETHANE PADS [1.5 mm (0.059 in) thick]
Insulates connectors, harness, etc.
76268-9E005: 100×135 mm (3.94×5.31 in)/76884-71L01: 60×85 mm (2.36×3.35 in)/76884-71L02: 15×25 mm (0.59×0.98 in)
INSULATOR (Foam blocks)
Insulates components from contact. Can be used to fill space behind a panel.
73982-9E000: 45 mm (1.77 in) thick, 50×50 mm (1.97×1.97 in)/73982-50Y00: 10 mm (0.39 in) thick, 50×50 mm (1.97×1.97 in)
INSULATOR (Light foam block)
80845-71L00: 30 mm (1.18 in) thick, 30×50 mm (1.18×1.97 in)
FELT CLOTH TAPE
Used to insulate where movement does not occur. Ideal for instrument panel applications.
68370-4B000: 15×25 mm (0.59×0.98 in) pad/68239-13E00: 5 mm (0.20 in) wide tape roll. The following materials not found in the kit can also be used to repair squeaks and rattles.
UHMW (TEFLON) TAPE
Insulates where slight movement is present. Ideal for instrument panel applications.

SILICONE GREASE
Used instead of UHMW tape that will be visible or not fit.
Note: Will only last a few months.
SILICONE SPRAY
Use when grease cannot be applied.
DUCT TAPE
Use to eliminate movement.

CONFIRM THE REPAIR

Confirm that the cause of a noise is repaired by test driving the vehicle. Operate the vehicle under the same conditions as when the noise originally occurred. Refer to the notes on the Diagnostic Worksheet.

Generic Squeak and Rattle Troubleshooting

INFOID:0000000001703945

Refer to Table of Contents for specific component removal and installation information.

INSTRUMENT PANEL

Most incidents are caused by contact and movement between:

1. The cluster lid A and instrument panel
2. Acrylic lens and combination meter housing
3. Instrument panel to front pillar garnish
4. Instrument panel to windshield
5. Instrument panel mounting pins
6. Wiring harnesses behind the combination meter
7. A/C defroster duct and duct joint

These incidents can usually be located by tapping or moving the components to duplicate the noise or by pressing on the components while driving to stop the noise. Most of these incidents can be repaired by applying felt cloth tape or silicone spray (in hard to reach areas). Urethane pads can be used to insulate wiring harness.

CAUTION:
Do not use silicone spray to isolate a squeak or rattle. If you saturate the area with silicone, you will not be able to recheck the repair.

CENTER CONSOLE

Components to pay attention to include:

1. Shifter assembly cover to finisher
2. A/C control unit and cluster lid C
3. Wiring harnesses behind audio and A/C control unit

The instrument panel repair and isolation procedures also apply to the center console.

DOORS

Pay attention to the:

1. Finisher and inner panel making a slapping noise
2. Inside handle escutcheon to door finisher
3. Wiring harnesses tapping
4. Door striker out of alignment causing a popping noise on starts and stops

Tapping or moving the components or pressing on them while driving to duplicate the conditions can isolate many of these incidents. You can usually insulate the areas with felt cloth tape or insulator foam blocks from the NISSAN Squeak and Rattle Kit (J-43980) to repair the noise.

TRUNK

Trunk noises are often caused by a loose jack or loose items put into the trunk by the owner.
In addition look for:

1. Trunk lid bumpers out of adjustment
2. Trunk lid striker out of adjustment
3. The trunk lid torsion bars knocking together
4. A loose license plate or bracket

Most of these incidents can be repaired by adjusting, securing or insulating the item(s) or component(s) causing the noise.

SUNROOF/HEADLINING

Noises in the sunroof/headlining area can often be traced to one of the following:

1. Sunroof lid, rail, linkage or seals making a rattle or light knocking noise
2. Sun visor shaft shaking in the holder
3. Front or rear windshield touching headliner and squeaking

Again, pressing on the components to stop the noise while duplicating the conditions can isolate most of these incidents. Repairs usually consist of insulating with felt cloth tape.

OVERHEAD CONSOLE (FRONT AND REAR)

Overhead console noises are often caused by the console panel clips not being engaged correctly. Most of these incidents are repaired by pushing up on the console at the clip locations until the clips engage.
In addition look for:

1. Loose harness or harness connectors.
2. Front console map/reading lamp lense loose.
3. Loose screws at console attachment points.

SEATS

When isolating seat noise it's important to note the position the seat is in and the load placed on the seat when the noise is present. These conditions should be duplicated when verifying and isolating the cause of the noise.
Cause of seat noise include:

1. Headrest rods and holder
2. A squeak between the seat pad cushion and frame
3. The rear seatback lock and bracket

These noises can be isolated by moving or pressing on the suspected components while duplicating the conditions under which the noise occurs. Most of these incidents can be repaired by repositioning the component or applying urethane tape to the contact area.

UNDERHOOD

Some interior noise may be caused by components under the hood or on the engine wall. The noise is then transmitted into the passenger compartment.
Causes of transmitted underhood noise include:

1. Any component mounted to the engine wall
2. Components that pass through the engine wall
3. Engine wall mounts and connectors
4. Loose radiator mounting pins
5. Hood bumpers out of adjustment
6. Hood striker out of adjustment

These noises can be difficult to isolate since they cannot be reached from the interior of the vehicle. The best method is to secure, move or insulate one component at a time and test drive the vehicle. Also, engine RPM or load can be changed to isolate the noise. Repairs can usually be made by moving, adjusting, securing, or insulating the component causing the noise.

Diagnostic Worksheet

INFOID:0000000001703946

Dear Customer:
We are concerned about your satisfaction with your vehicle. Repairing a squeak or rattle sometimes can be very difficult. To help us fix your vehicle right the first time, please take a moment to note the area of the vehicle where the squeak or rattle occurs and under what conditions. You may be asked to take a test drive with a service advisor or technician to ensure we confirm the noise you are hearing.

SQUEAK & RATTLE DIAGNOSTIC WORKSHEET

I. WHERE DOES THE NOISE COME FROM? (circle the area of the vehicle)
The illustrations are for reference only, and may not reflect the actual configuration of your vehicle.

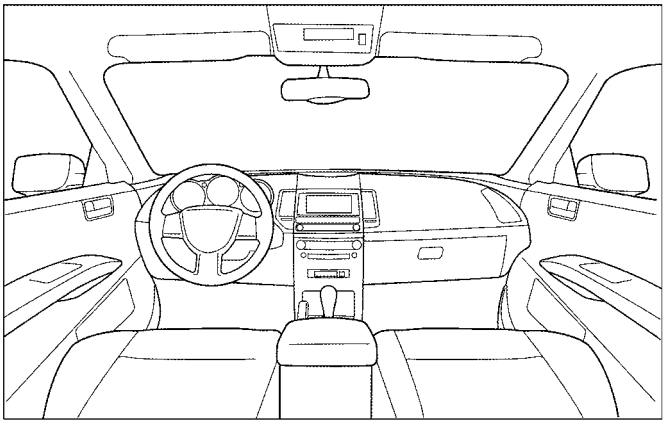

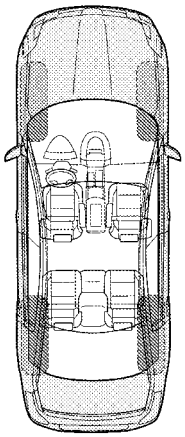

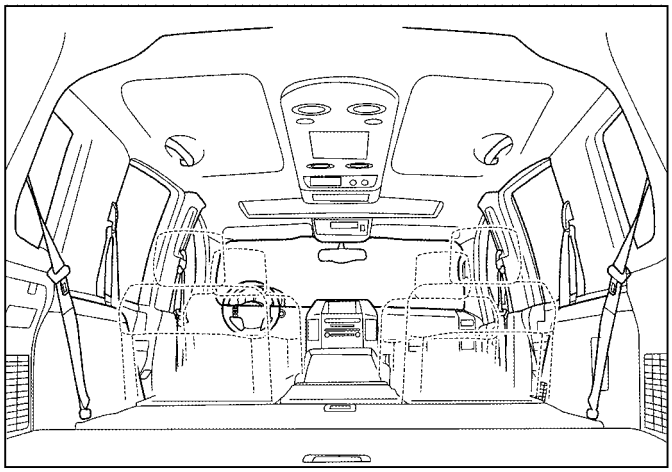

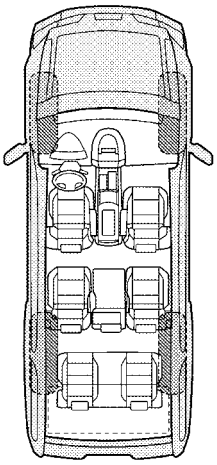

Continue to page 2 of the worksheet and briefly describe the location of the noise or rattle. In addition, please indicate the conditions which are present when the noise occurs.

LAIA0072E

SQUEAK & RATTLE DIAGNOSTIC WORKSHEET - page 2

Briefly describe the location where the noise occurs:

_____

_____

II. WHEN DOES IT OCCUR? (please check the boxes that apply)

- ☐ Anytime
- ☐ 1st time in the morning
- ☐ Only when it is cold outside
- ☐ Only when it is hot outside
- ☐ After sitting out in the rain
- ☐ When it is raining or wet
- ☐ Dry or dusty conditions
- ☐ Other:

III. WHEN DRIVING:

- ☐ Through driveways
- ☐ Over rough roads
- ☐ Over speed bumps
- ☐ Only about ____ mph
- ☐ On acceleration
- ☐ Coming to a stop
- ☐ On turns: left, right or either (circle)
- ☐ With passengers or cargo
- ☐ Other: _____
- ☐ After driving _____ miles or _____ minutes

IV. WHAT TYPE OF NOISE

- ☐ Squeak (like tennis shoes on a clean floor)
- ☐ Creak (like walking on an old wooden floor)
- ☐ Rattle (like shaking a baby rattle)
- ☐ Knock (like a knock at the door)
- ☐ Tick (like a clock second hand)
- ☐ Thump (heavy muffled knock noise)
- ☐ Buzz (like a bumble bee)

TO BE COMPLETED BY DEALERSHIP PERSONNEL

Test Drive Notes:

_____

_____

_____

	YES	NO	Initials of person performing
Vehicle test driven with customer	☐	☐	_____
- Noise verified on test drive	☐	☐	_____
- Noise source located and repaired	☐	☐	_____
- Follow up test drive performed to confirm repair	☐	☐	_____

VIN: _____ Customer Name _____

W.O.# _____ Date: _____

This form must be attached to Work Order

LAIA0071E

HOOD

Fitting Adjustment

INFOID:0000000001703947

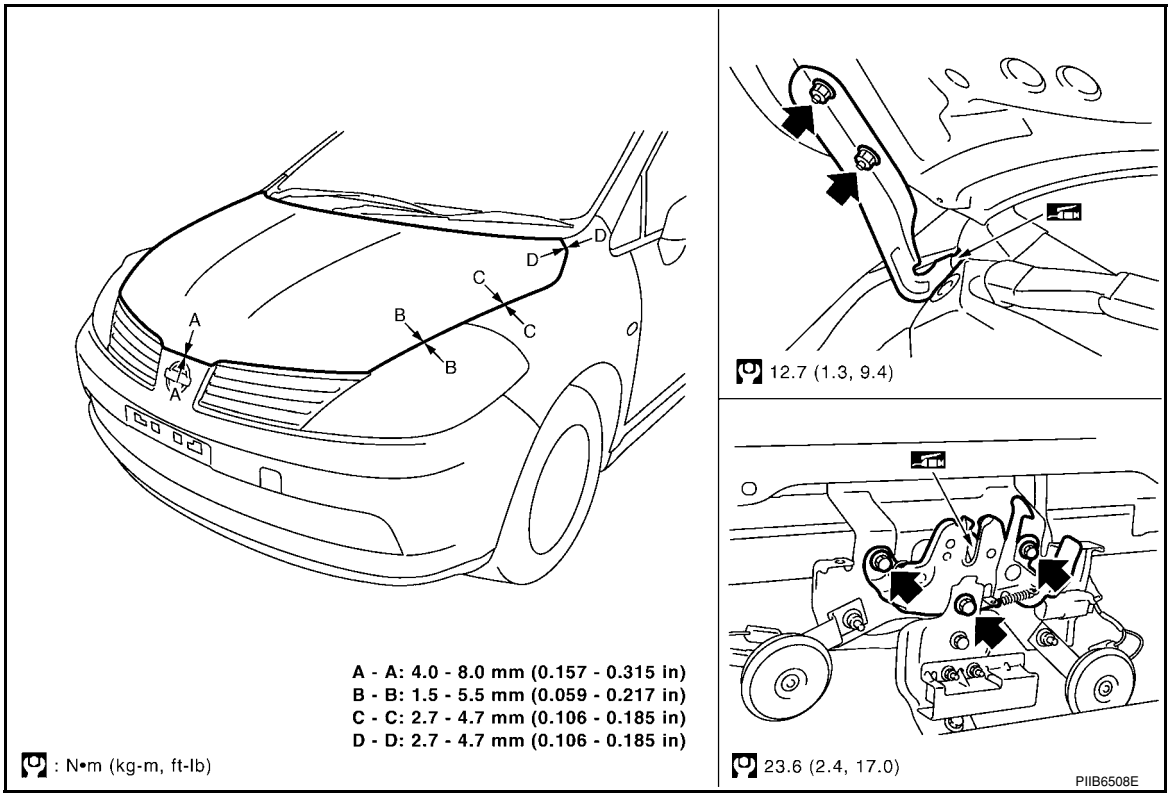

FRONT END HEIGHT ADJUSTMENT AND LATERAL/LONGITUDINAL CLEARANCE ADJUSTMENT

1. Remove the front grille. Refer to EI-20.
2. Remove hood lock. Rotate bumper rubber to adjust height until hood becomes 1.0 to 1.5 mm lower than the fender.
3. Position hood lock and engage striker. Check hood lock and striker for looseness. Tighten lock bolts to the specified torque.
4. Install the front grille. Refer to EI-20.

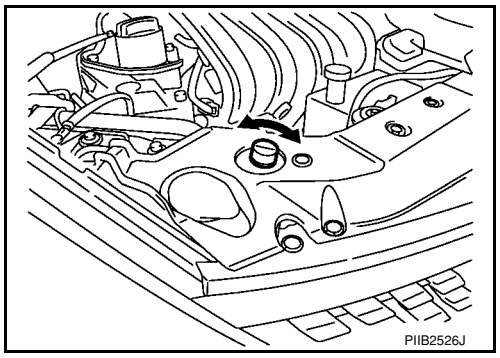

CAUTION:

Adjust the clearance between hood and other parts so that the dimensional difference left and right is as follows.

Hood and headlamp (B - B)	**: Less than 2.0 mm (0.08 in)**
Hood and fender (C - C)	**: Less than 1.5 mm (0.06 in)**
Hood and fender (D - D)	**: Less than 1.5 mm (0.06 in)**

SURFACE MISMATCH ADJUSTMENT

1. Remove the front grille. Refer to EI-20.
2. Release hood lock, and adjust surface level difference of hood, fender, and headlamp according to the fitting standard dimension, using RH and LH bumper rubbers.

Hood and front bumper (A - A)	**: -1.3 - 2.7 mm (-0.05 - 0.11 in)**
Hood and fender (D - D)	**: -0.4 - 1.7 mm (-0.16 - 0.07 in)**

3. Install and align the hood lock until the center of the striker and the hood lock are vertically aligned.
4. Press the hood lightly with [approx. 29 N (3 kg] of force and adjust A and B as shown.

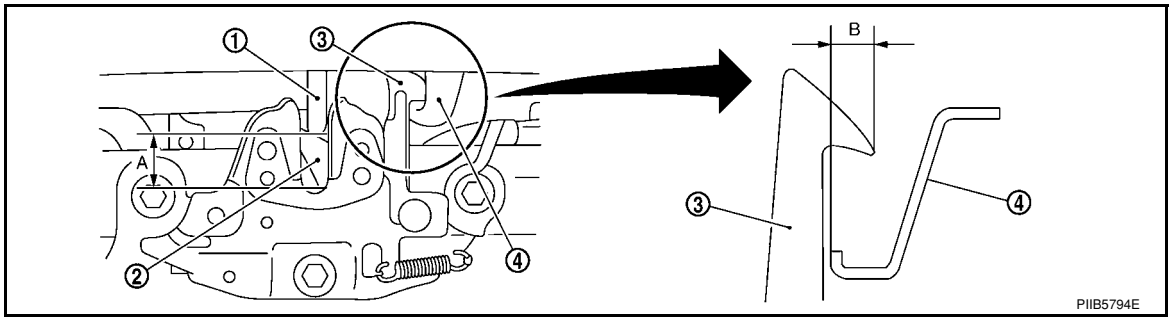

1. Hood striker
2. Primary latch
3. Secondary striker
4. Secondary latch

A : 20 mm (0.79 in)
B : 6.8 mm (0.268 in) min.

5. After adjustment tighten lock bolts to the specified torque.
6. Install the front grille. Refer to EI-20.

Removal and Installation

INFOID:0000000001703948

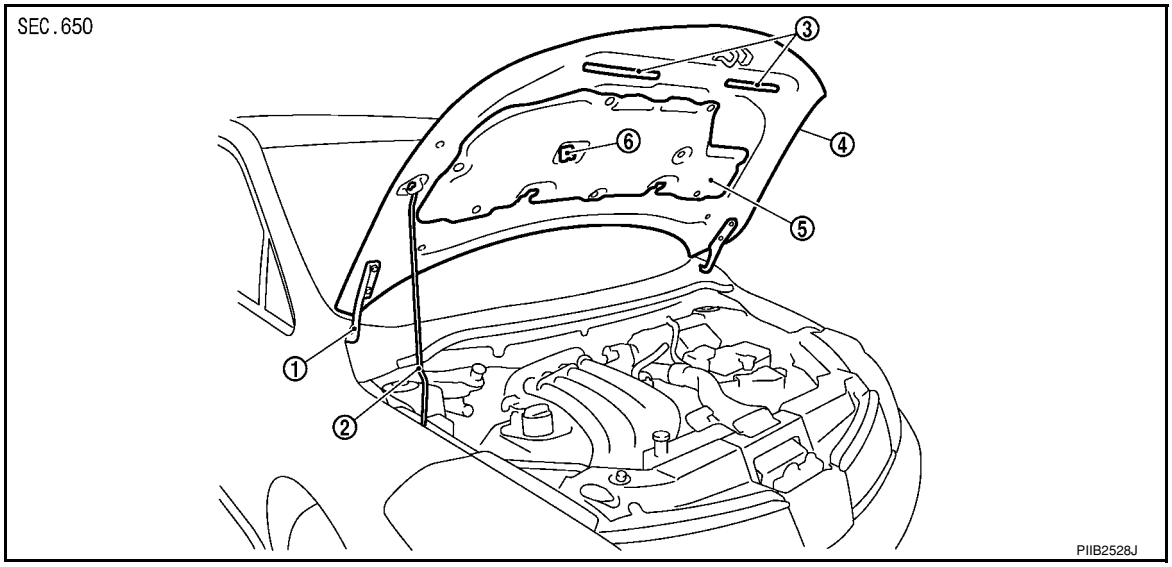

1. Hood hinge
2. Hood stay
3. Radiator core seal rubber
4. Hood assembly
5. Hood insulator
6. Hood stay holder

HOOD ASSEMBLY

Removal

1. Remove hinge nuts on hood and remove hood assembly.
   CAUTION:
   Two technicians should be used to avoid damaging the hood during removal.

   12.7 N·m (1.3 kg-m, 9.4 ft-lb)

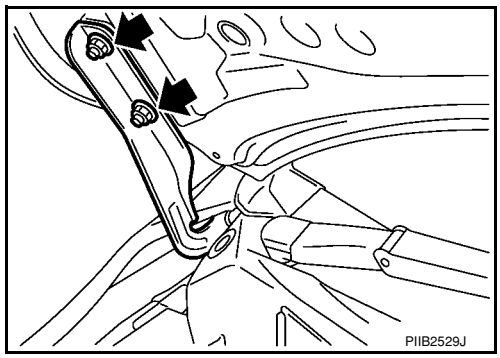

Installation

Installation is in the reverse order of removal.

CAUTION:

- **Before installing hood hinge, apply anticorrosive agent onto the surfaces that make contact with the vehicle body.**
- **After installing, perform hood fitting adjustment. Refer to BL-13, "Fitting Adjustment".**

HOOD HINGE

Removal

1. Remove hood assembly. Refer to "Removal and Installation".
2. Remove front fender. Refer to BL-21, "Removal and Installation".
3. Remove bolts and the hood hinge.

12.7 N·m (1.3 kg-m, 9.4 ft-lb)

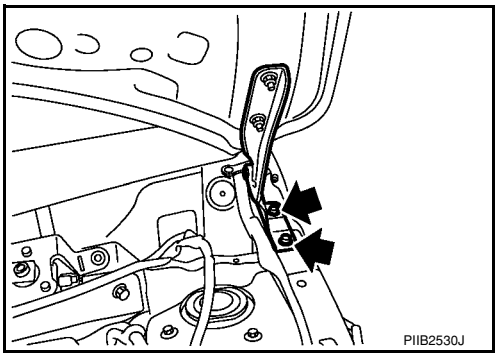

Installation

Installation is in the reverse order of removal.

Removal and Installation of Hood Lock Control

INFOID:0000000001703949

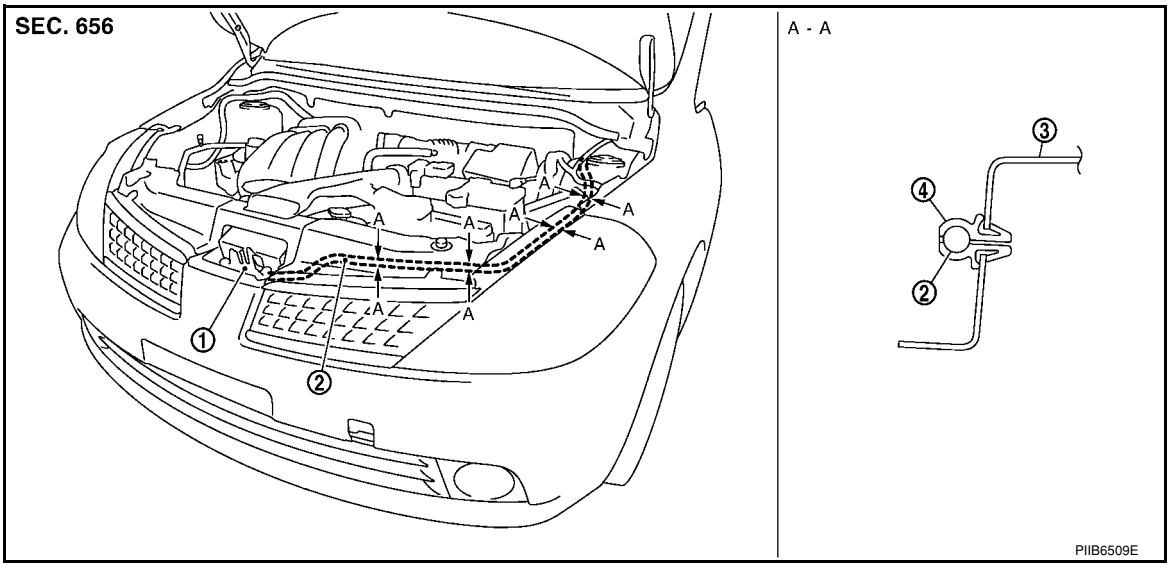

1. Hood lock
2. Hood lock cable
3. Hood ledge upper front
4. Clip

REMOVAL

Hood Lock

1. Remove front grille (LH). Refer to EI-20, "Removal and Installation".
2. Remove hood lock bolts.

23.6 N·m (2.4 kg-m, 17 ft-lb)

3. Remove hood lock from hood lock cable.

Hood Lock Reinforcement

1. Remove front bumper. Refer to EI-14, "Removal and Installation".
2. Remove crash zone sensor. Refer to SRS-41, "Removal and Installation".
3. Remove bolts, and the hood lock reinforcement.

23.6 N·m (2.4 kg-m, 17 ft-lb)

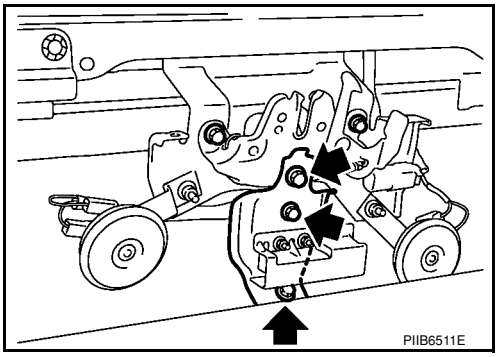

Hood Lock Cable

1. Remove front grille (LH/RH). Refer to EI-20, "Removal and Installation".
2. Remove fender protector (LH). Refer to EI-23, "Component".
3. Remove hood lock, and remove hood lock cable from hood lock.
4. Remove radiator core upper support, hood ledge, and then remove hood lock cable.
5. Remove hood opener on bottom left of instrument panel, and then remove hood lock cable.
6. Remove grommet on lower dashboard, and pull out hood lock cable from passenger room side.
   CAUTION:
   While pulling the cable, be careful not to damage (peel) hood opener cable outer surface on edges of body through hole.

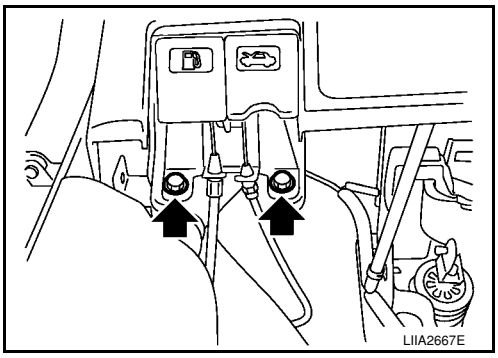

INSTALLATION

Installation is in the reverse order of removal.

- Perform hood fitting adjustment. Refer to BL-13, "Fitting Adjustment".

Hood Lock Reinforcement

When installing hood lock reinforcement, loosen hood bolts, and then tighten bolts in the order as shown.

23.6 N·m (2.4 kg-m, 17 ft-lb)

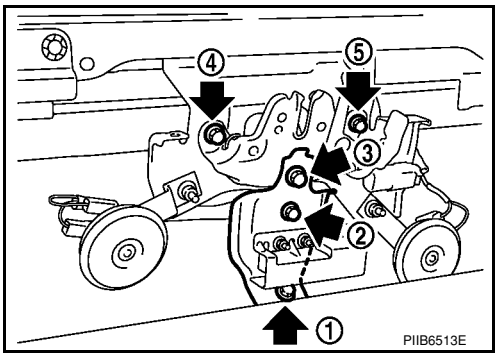

Hood Lock Cable

1. Pull the hood lock cable through the panel hole to the engine compartment.
   CAUTION:

Be careful not to bend the cable too much, keeping the radius 100 mm (3.94 in) or more.

2. Check that the cable is not offset from the positioning grommet, and push the grommet into the panel hole securely.
3. Apply the sealant around the grommet (at * mark).

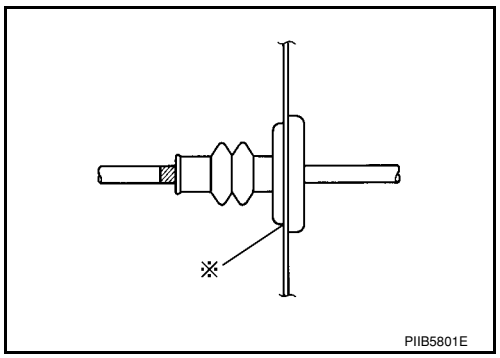

4. Install cable securely to lock.
5. After installing, check hood lock adjustment and hood opener operation.

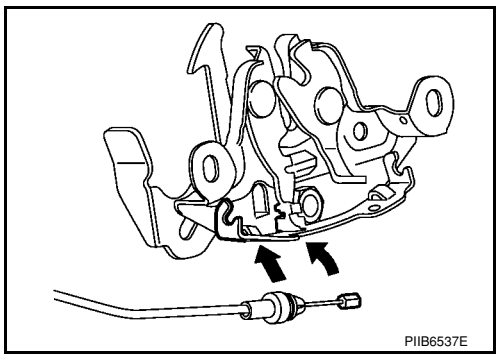

Hood Lock Control Inspection

INFOID:0000000001703950

CAUTION:
If the hood lock cable is bent or deformed, replace it.

1. Check that the secondary latch is properly engaged with the secondary striker (B: 6.8 mm (0.268 in) with hood's own weight.

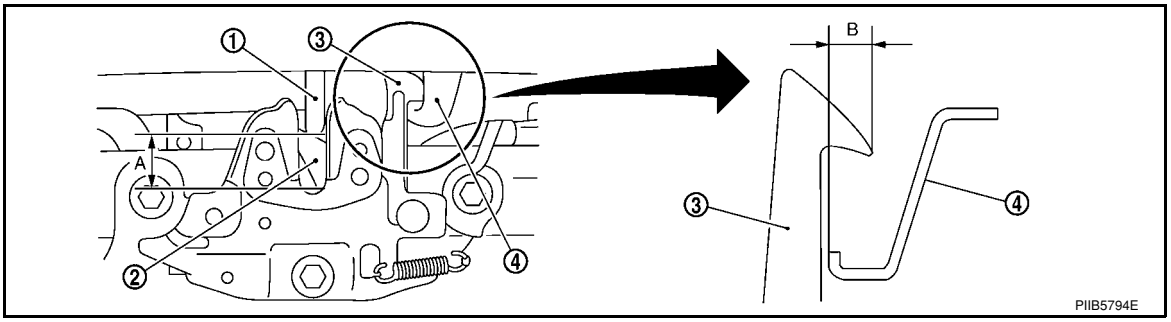

1. Hood striker
2. Primary latch
3. Secondary striker
4. Secondary latch

2. While operating the hood release handle, carefully check that the front end of the hood is raised by approx. 20 mm (0.79 in). Also check that the hood release handle returns to the original position.
3. Check that the secondary hood release operates at 29.4 N (3.0 kg) or below.
4. Confirm static closing force of the hood is 343 – 441 N·m (35 – 44 kg-m).

5. Check the hood lock lubrication condition. If necessary, apply “body grease” to the points as shown.

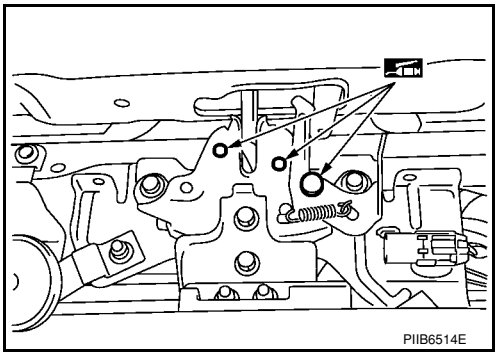

RADIATOR CORE SUPPORT

Removal and Installation

INFOID:0000000001703951

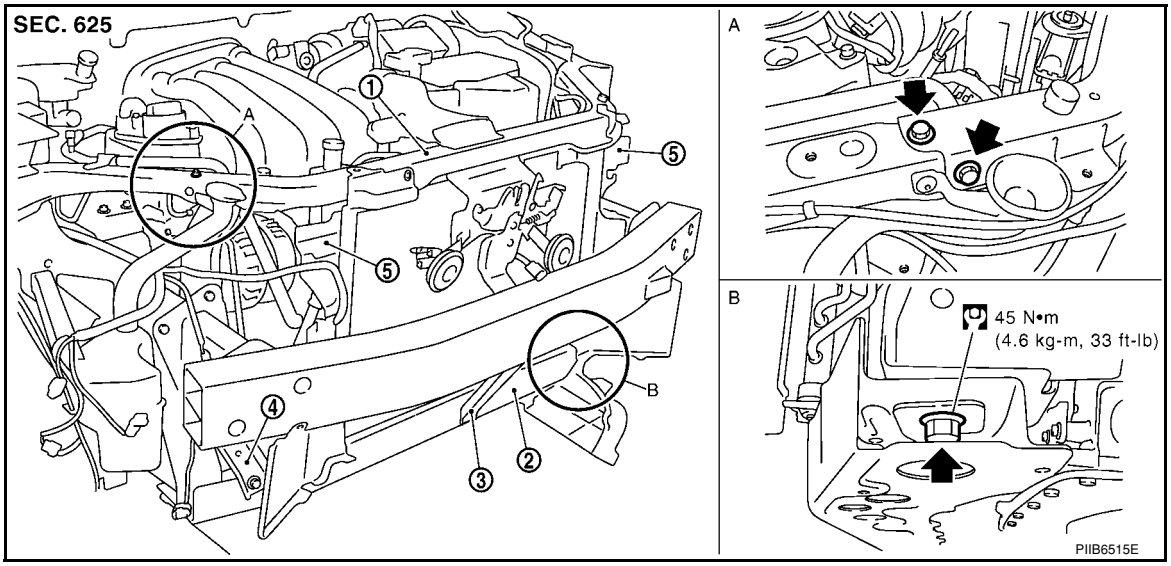

1. Radiator core support upper
2. Radiator core support lower
3. Radiator core support lower stay
4. Radiator core support side stay
5. Air guide

REMOVAL

Radiator Core Support Upper

1. Remove the air duct. Refer to EM-16, "Removal and Installation" .
2. Remove the headlamp (LH/RH). Refer to LT-23, "Removal and Installation" .
3. Remove the hood lock assembly, and remove hood lock cable. Refer to BL-15 .
4. Remove the air guide and hood lock cable clip.
5. Remove the washer tank inlet. Refer to WW-22, "Removal and Installation of Washer Tank" .
6. Remove the radiator core support upper.

Radiator Core Support Lower

1. Remove the air duct. Refer to EM-16, "Removal and Installation" .
2. Remove the front bumper. Refer to EI-14, "Removal and Installation" .
3. Remove the headlamp (LH/RH). Refer to LT-23, "Removal and Installation" .
4. Remove the hood lock assembly, and remove hood lock cable. Refer to BL-15 .
5. Remove the air guide and hood lock cable mounting clip.
6. Remove the front bumper reinforcement. Refer to EI-14, "Removal and Installation" .
7. Remove the radiator core lower stay.

24.5 N·m (2.5 kg-m, 18 ft-lb)

8. Remove the undercover.

9. Remove radiator core support lower side stay.

   55.0 N·m (5.6 kg-m, 41 ft-lb)

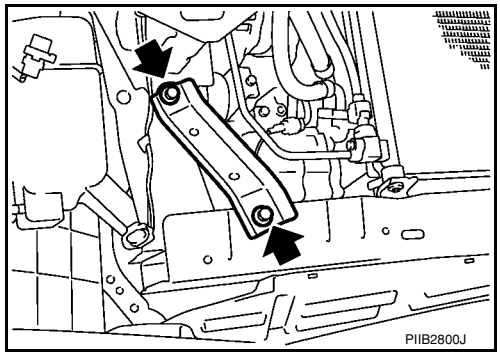

10. Tie a cord to all radiator core upper supports of the radiator and condenser.
    NOTE:
    To prevent the compressor and radiator from being dropped when the radiator core lower support is removed.
11. Remove the bolts, and lower radiator core lower supports.
12. Remove the radiator core lower supports.

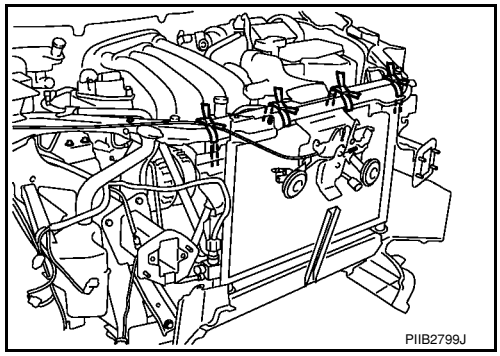

INSTALLATION

Installation is in the reverse order of removal.

FRONT FENDER

Removal and Installation

INFOID:0000000001703952

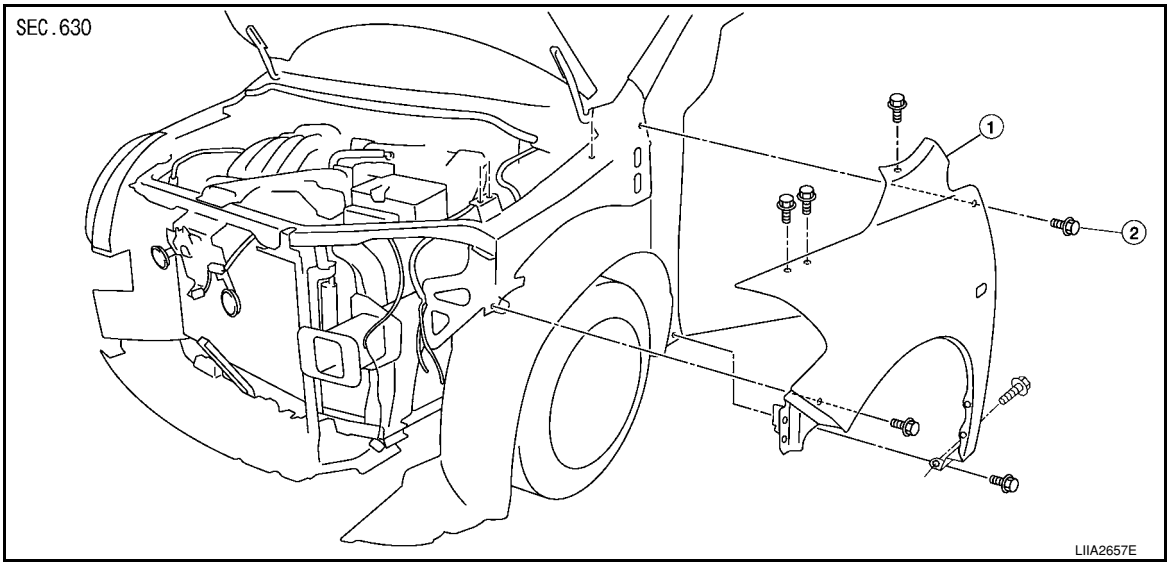

1.	Front fender	2	Bolt (LH 7 bolts required) (RH 8 bolts required)

REMOVAL

1. Remove the headlamp assemblies. Refer to LT-23, "Removal and Installation".
2. Remove the cowl top cover (LH/RH). Refer to EI-21, "Removal and Installation".
3. Remove the front fender protector. Refer to EI-23, "Component".
4. Remove the bolt and the front fender.

CAUTION:
While removing use a shop cloth to protect the vechicle body from damage.

INSTALLATION

Installation is in the reverse order of removal.

CAUTION:
- **After installing, apply touch-up paint onto the head of the front fender bolts.**
- **After installing, check front fender adjustment. Refer to BL-13, "Fitting Adjustment" and BL-144, "Fitting Adjustment".**

POWER DOOR LOCK SYSTEM

Component Parts and Harness Connector Location

INFOID:0000000001703953

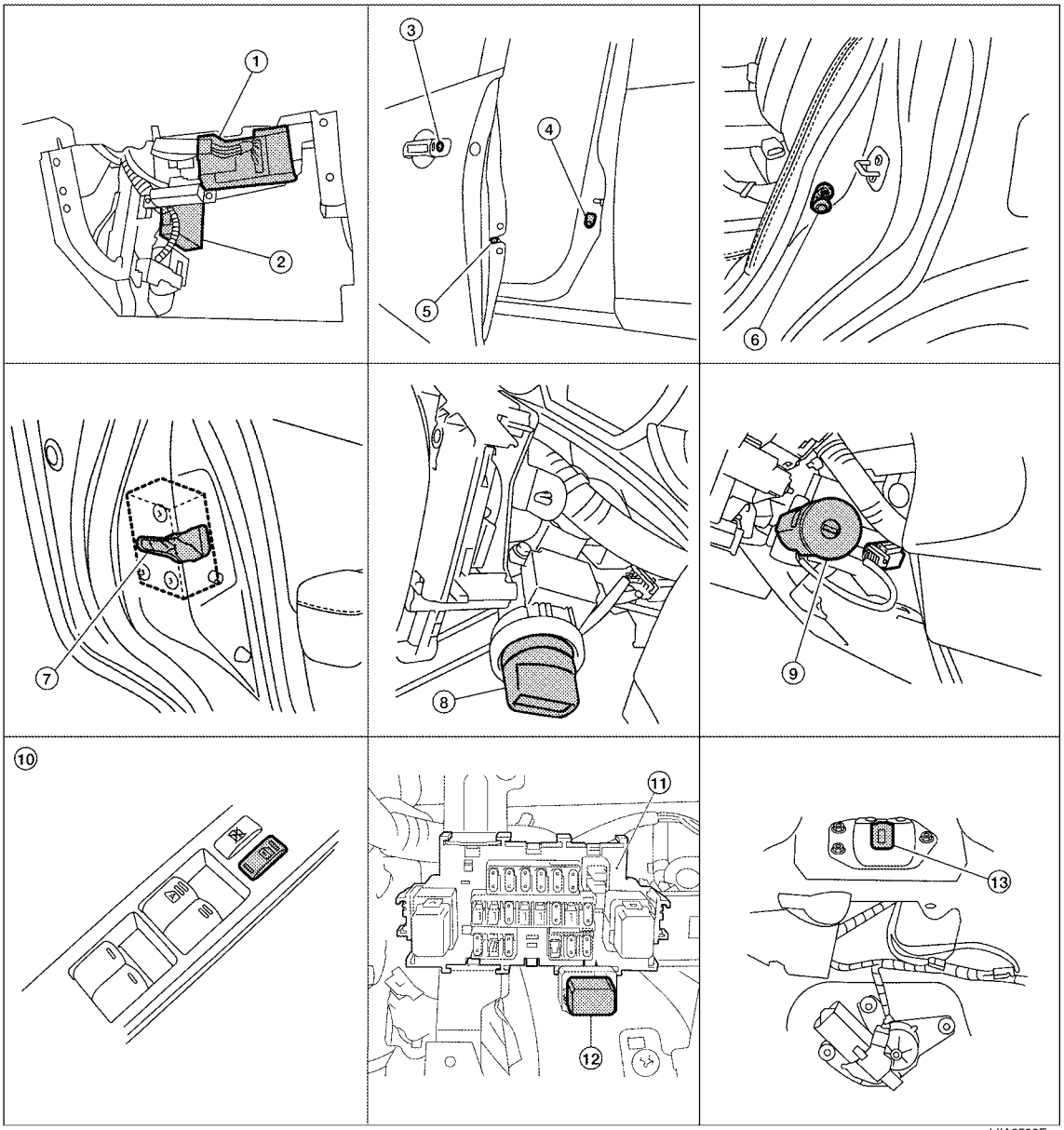

LIIA2593E

1. BCM M18, M19, M20 (view with glove box removed)
2. Intelligent Key unit M52 (if equipped)
3. Front door key cylinder switch LH D14
4. Front door switch LH B8, RH B108
5. Front door lock actuator LH D3, RH D114
6. Rear door switch LH B6, RH B116
7. Rear door lock actuator LH D205, RH D305
8. Key switch and ignition knob switch M73 (with Intelligent Key)
9. Key switch and key lock solenoid M27 (without Intelligent key)
10. Main power window and door lock/ unlock switch D7, D8
    Power window and door lock/unlock switch RH D105
11. Fuse block (with Intelligent Key) (view with instrument panel LH removed)
12. Passenger select unlock relay M2 (with Intelligent Key)
13. Back door lock assembly (back door switch) D405 (hatchback view with back door open)

System Description

INFOID:0000000001703954

Power is supplied at all times
- through 40A fusible link (letter **g** , located in the fuse and fusible link box)

- to BCM terminal 70
- through 10A fuse [No. 8, located in the fuse block (J/B)]
- to BCM terminal 57
- through 10A fuse [No. 14, located in the fuse block (J/B)]
- to key switch terminal 2 (without Intelligent Key system)
- through 10A fuse [No. 31, located in the fuse block (J/B)]
- to key switch and ignition knob switch terminals 2 and 4 (with Intelligent Key system).

When key switch is ON (key is inserted in ignition key cylinder), power is supplied
- through key switch terminal 1 (without Intelligent Key system) or key switch and ignition knob terminal 1 (with Intelligent Key system)
- to BCM terminal 37.

Ground is supplied
- to BCM terminal 67
- through body grounds M57 and M61.

LOCK OPERATION

When the door is locked with main power window and door lock/unlock switch, ground is supplied
- to BCM terminal 45
- through main power window and door lock and unlock switch terminals 17 and 18
- through body grounds M57 and M61.

When the door is locked with power window and door lock/unlock switch RH, ground is supplied
- to BCM terminal 45
- through power window and door lock and unlock switch RH terminals 1 and 3
- through body grounds M57 and M61.

When the door is locked with front door key cylinder switch LH, ground is supplied
- to BCM terminal 8
- through front door key cylinder switch LH terminals 1 and 2
- through body grounds M57 and M61.

UNLOCK OPERATION

When the door is unlocked with main power window and door lock/unlock switch, ground is supplied
- to BCM terminal 46
- through main power window and door lock/unlock switch terminals 6 and 17
- through body grounds M57 and M61.

When the door is unlocked with power window and door lock/unlock switch RH, ground is supplied
- to BCM terminal 46
- through power window and door lock and unlock switch RH terminals 2 and 3
- through body grounds M57 and M61.

When the door is unlocked with front door key cylinder switch LH, ground is supplied
- to BCM terminal 7
- through front door key cylinder switch LH terminals 2 and 3
- through body grounds M57 and M61.

When the front door switch LH is ON (door is OPEN), ground is supplied
- to BCM terminal 47
- through front door switch LH terminal 2
- through front door switch LH case ground.

When the front door switch RH is ON (door is OPEN), ground is supplied
- to BCM terminal 12
- through front door switch RH terminal 2
- through front door switch RH case ground.

When the rear door switch LH is ON (door is OPEN), ground is supplied
- to BCM terminal 48
- through rear door switch LH terminal 1
- through rear door switch LH case ground.

When the rear door switch RH is ON (door is OPEN), ground is supplied
- to BCM terminal 13
- through rear door switch RH terminal 1
- through rear door switch RH case ground.

When the back door switch (hatchback) is ON (back door is OPEN), ground is supplied
- to BCM terminal 43
- through back door switch terminals 3 and 4
- through body grounds B117, B132 and D402.

OUTLINE

Functions available by operating the inside door lock and unlock switches

- Interlocked with the locking operation of door lock and unlock switch, door lock actuators of all doors are locked.
- Interlocked with the unlocking operation of door lock and unlock switch, door lock actuators of all doors are unlocked.

Functions available by operating the front door key cylinder switch LH

- Interlocked with the locking operation of front door key cylinder switch LH, door lock actuators of all doors are locked.
- When front door key cylinder switch LH is unlocked, front door lock actuator LH is unlocked.
- When front door key cylinder switch LH is unlocked for the second time within 5 seconds after the first operation, door lock actuators on all doors are unlocked.

Key reminder door system

When door lock and unlock switch is operated to lock doors with ignition key inserted in key cylinder and any door open, all door lock actuators are locked and then unlocked.

CAN Communication System Description

INFOID:0000000001703955

Refer to LAN-6 .

Schematic

INFOID:0000000001703956

WITHOUT INTELLIGENT KEY SYSTEM

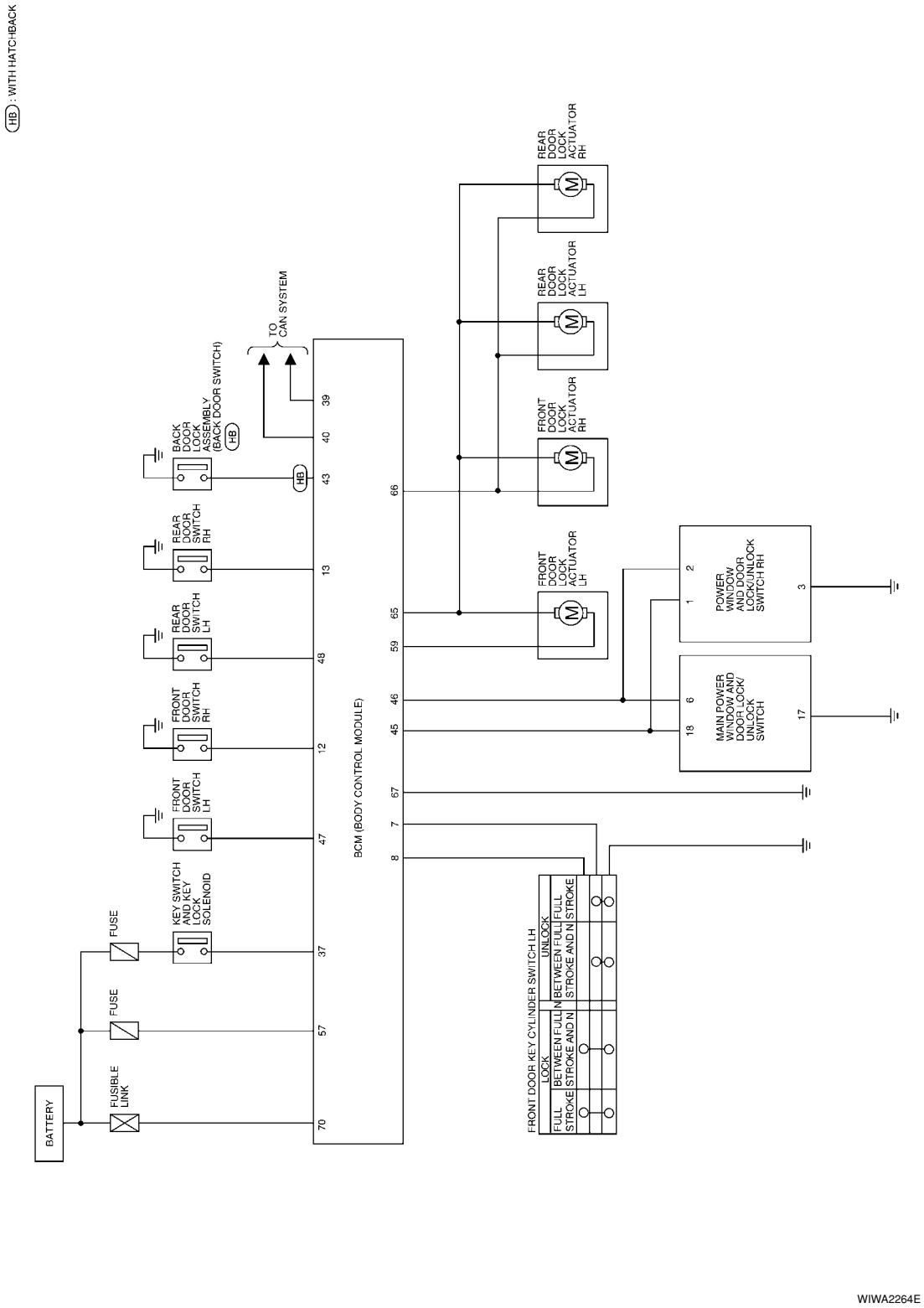

WIWA2264E

Wiring Diagram - D/LOCK -

INFOID:0000000001703957

WITHOUT INTELLIGENT KEY SYSTEM

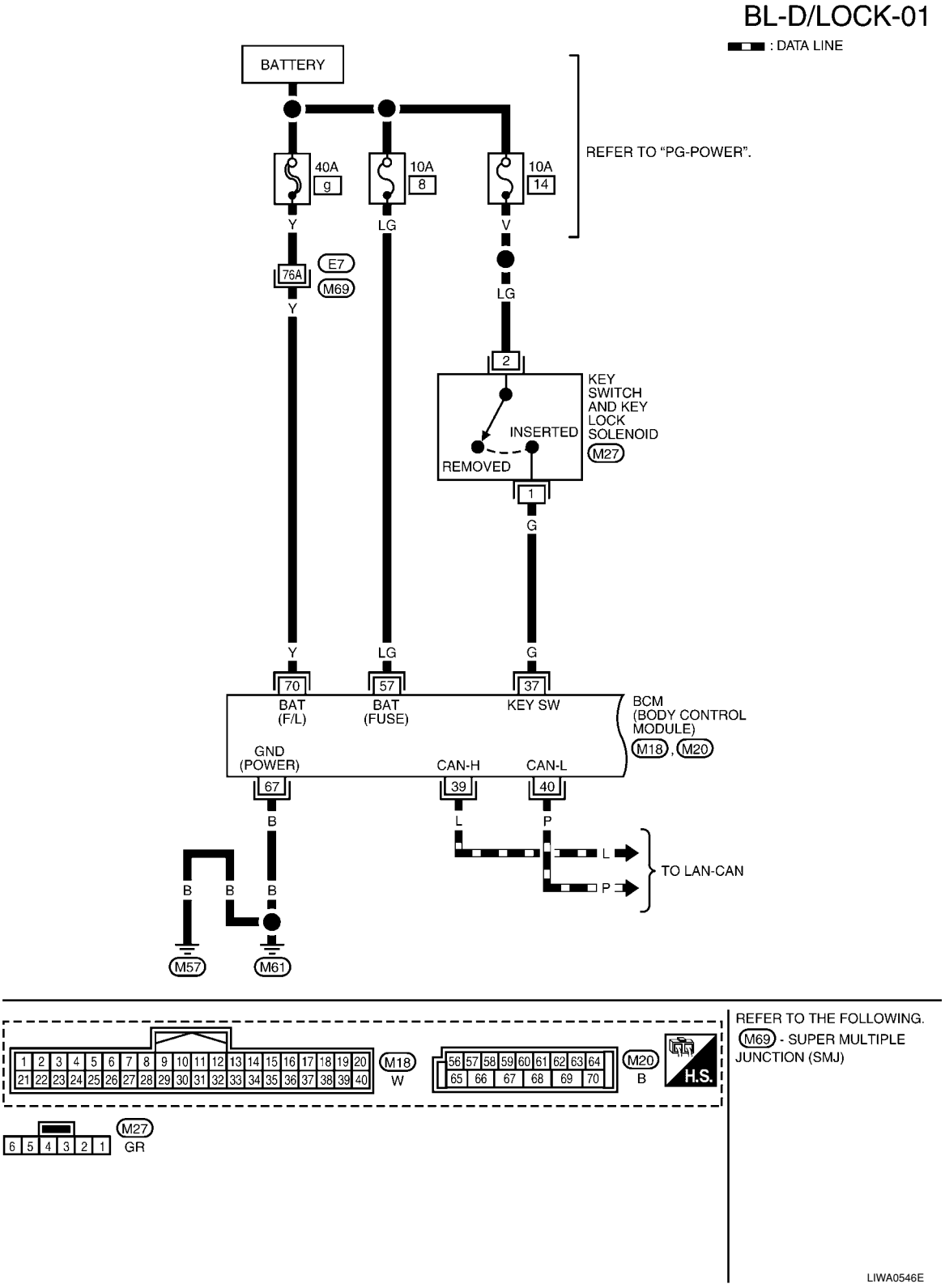

BL-D/LOCK-02

HB : WITH HATCHBACK

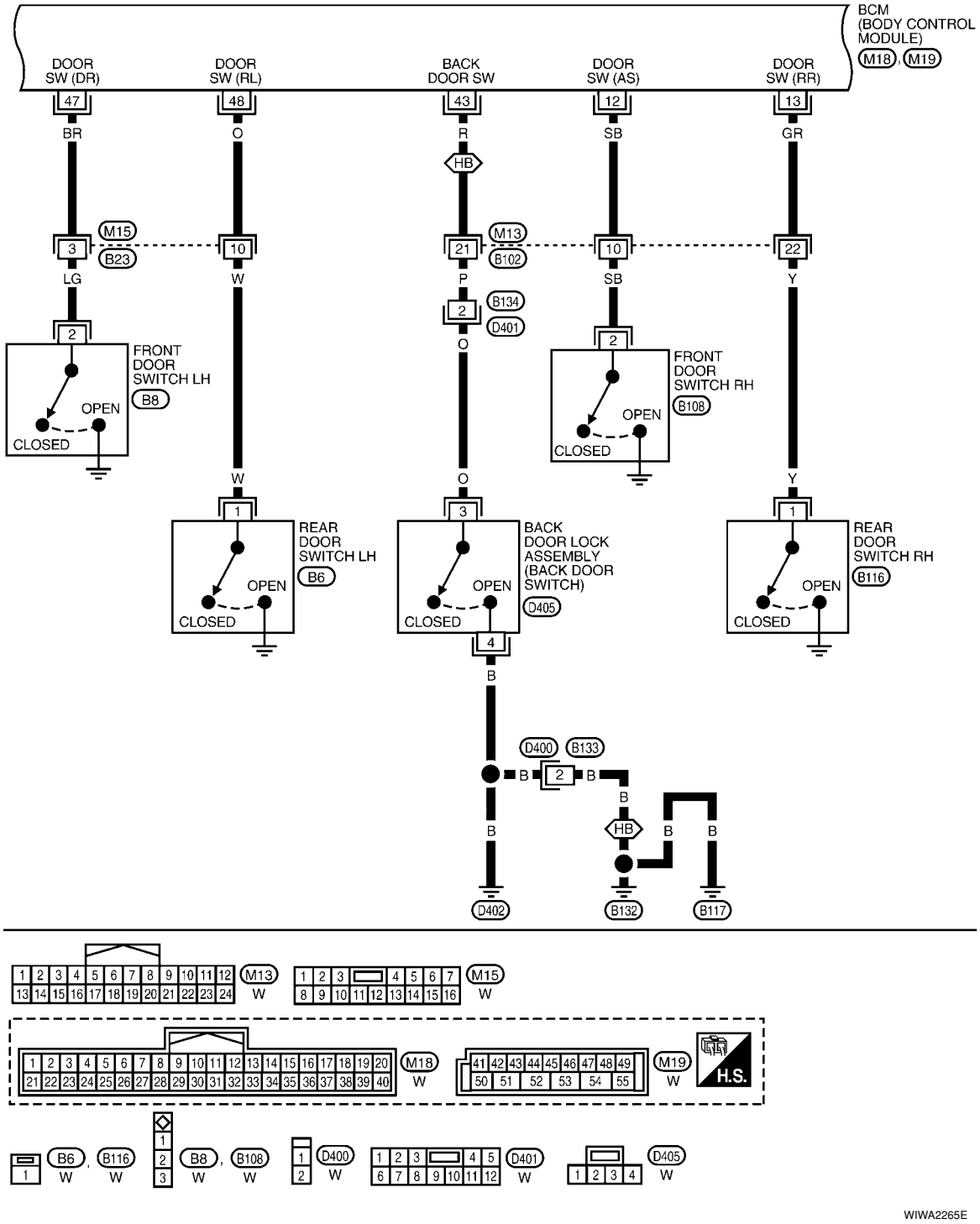

WIWA2265E

BL-D/LOCK-03

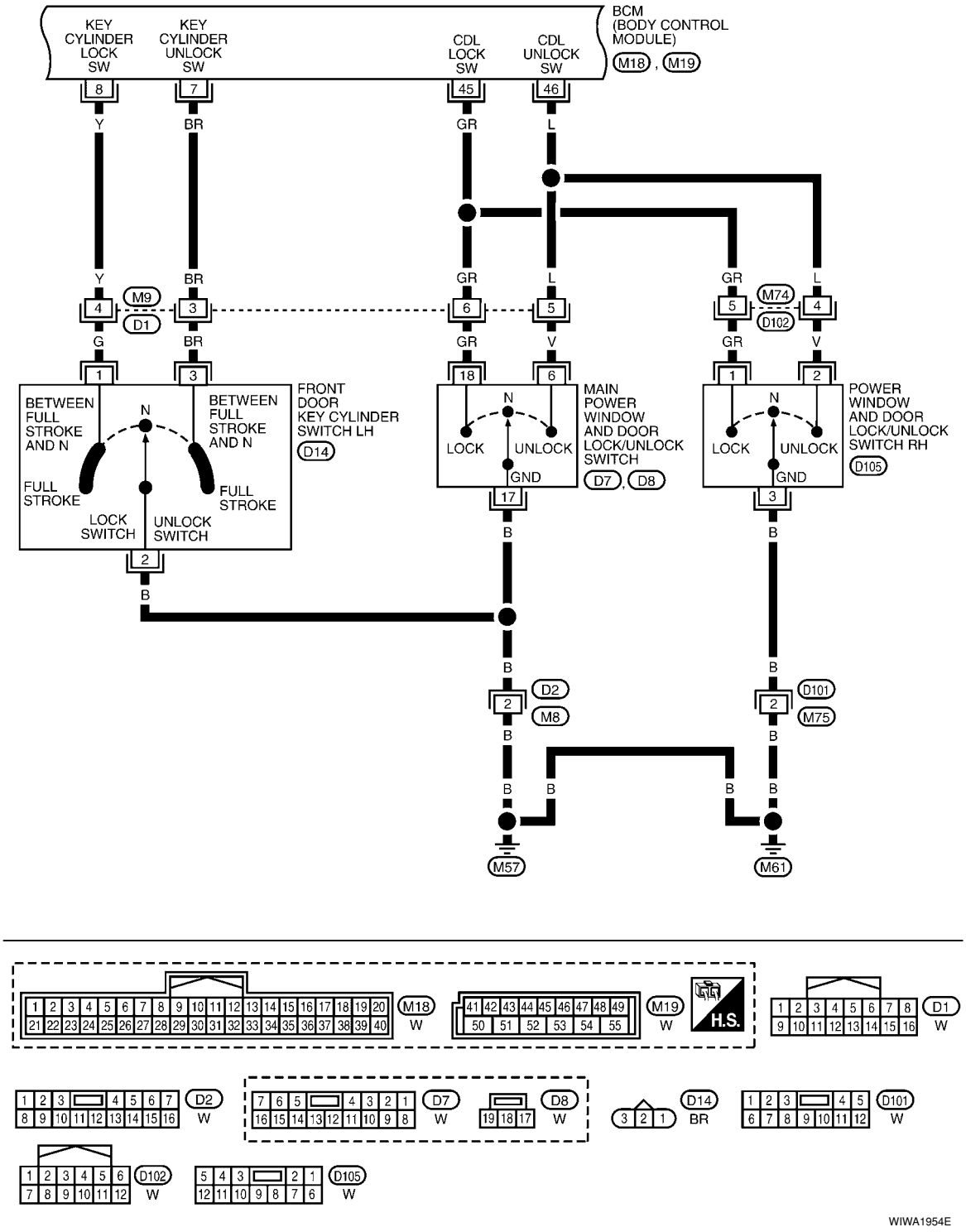
BCM
(BODY CONTROL
MODULE)
M18 , M19
KEY
CYLINDER
LOCK
SW
KEY
CYLINDER
UNLOCK
SW
CDL
LOCK
SW
CDL
UNLOCK
SW
8
7
45
46
Y
BR
GR
L
M9
D1
M74
D102
G
1
3
18
6
5
4
2
BETWEEN
FULL
STROKE
AND N
N
FULL
STROKE
LOCK
SWITCH
UNLOCK
SWITCH
FRONT
DOOR
KEY CYLINDER
SWITCH LH
D14
LOCK
UNLOCK
GND
MAIN
POWER
WINDOW
AND DOOR
LOCK/UNLOCK
SWITCH
D7 , D8
POWER
WINDOW
AND DOOR
LOCK/UNLOCK
SWITCH RH
D105
17
B
D2
M8
D101
M75
M57
M61
H.S.
M18
M19
D1
D2
D7
D8
D14
BR
D101
D102
D105
W
WIWA1954E

BL-D/LOCK-04

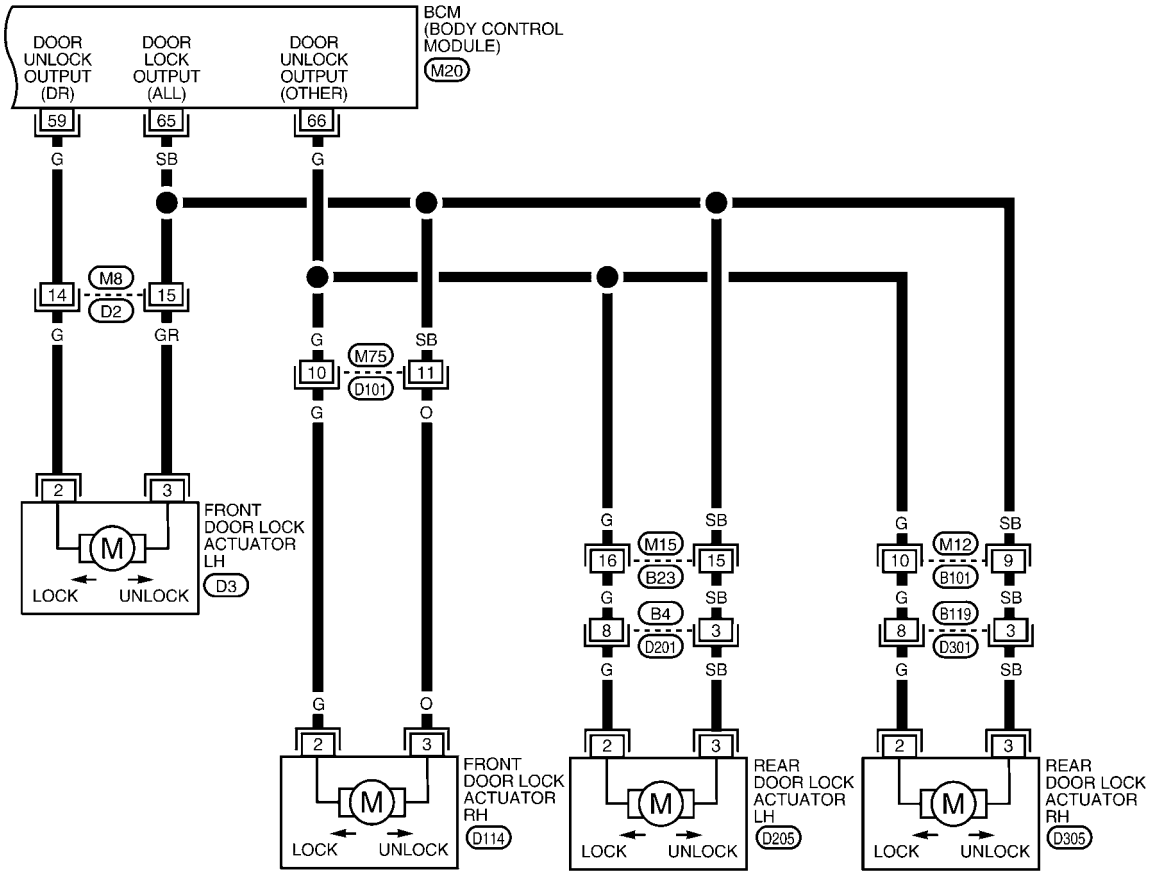

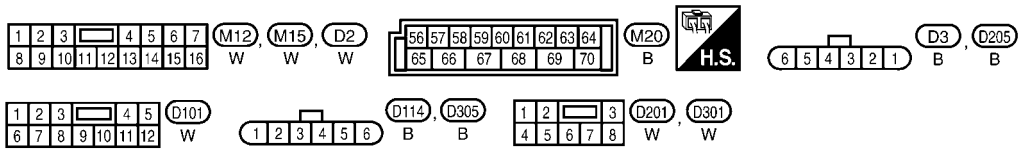

WIWA1955E

Schematic

INFOID:0000000001703958

WITH INTELLIGENT KEY SYSTEM

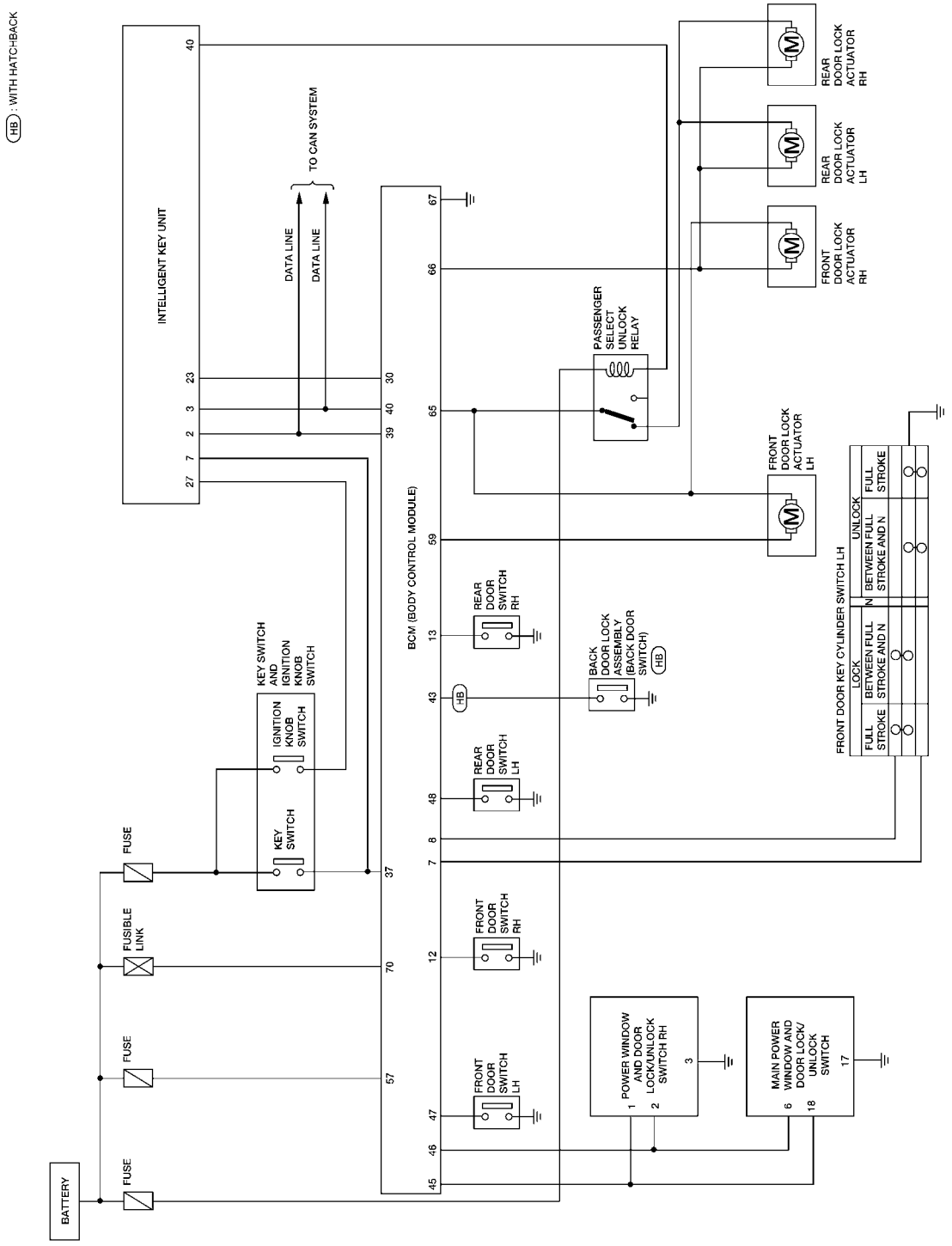

WIWA2266E

Wiring Diagram - D/LOCK -

INFOID:0000000001703959

WITH INTELLIGENT KEY SYSTEM

BL-D/LOCK-05

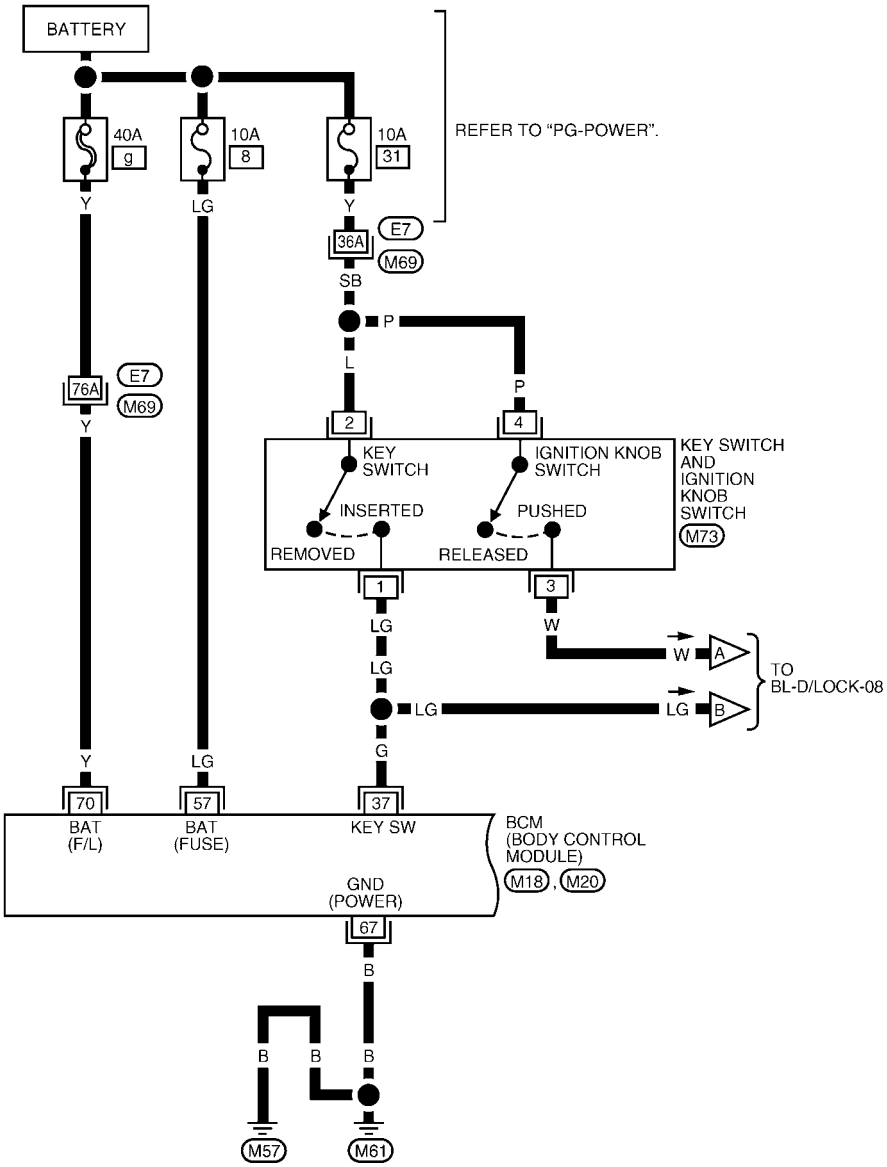

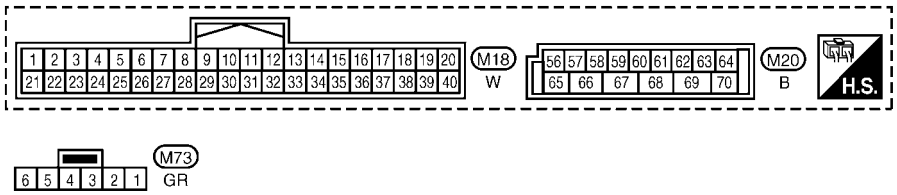

REFER TO THE FOLLOWING.
M69 - SUPER MULTIPLE JUNCTION (SMJ)

WIWA1957E

BL-D/LOCK-06

HB : WITH HATCHBACK

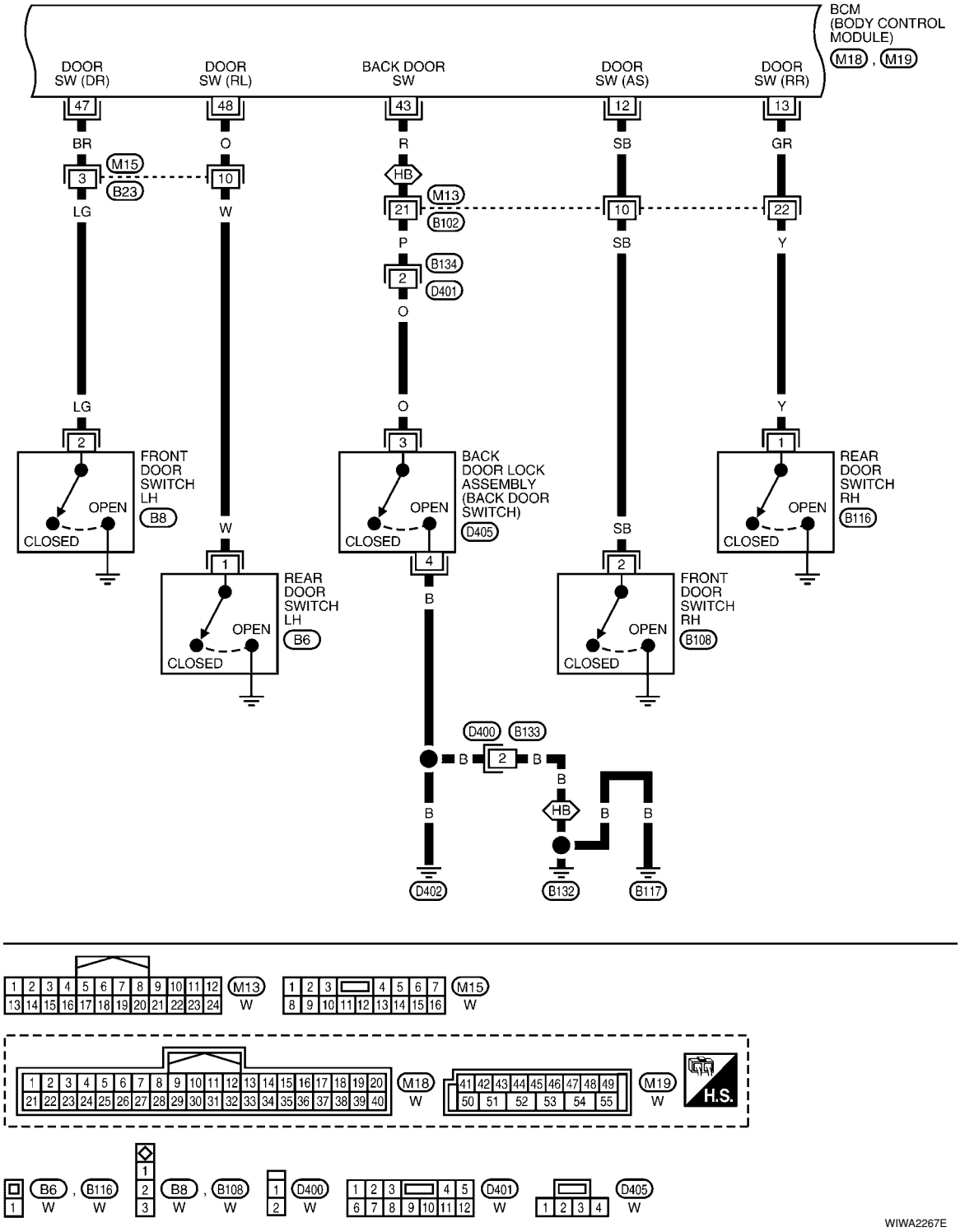

BL-D/LOCK-07

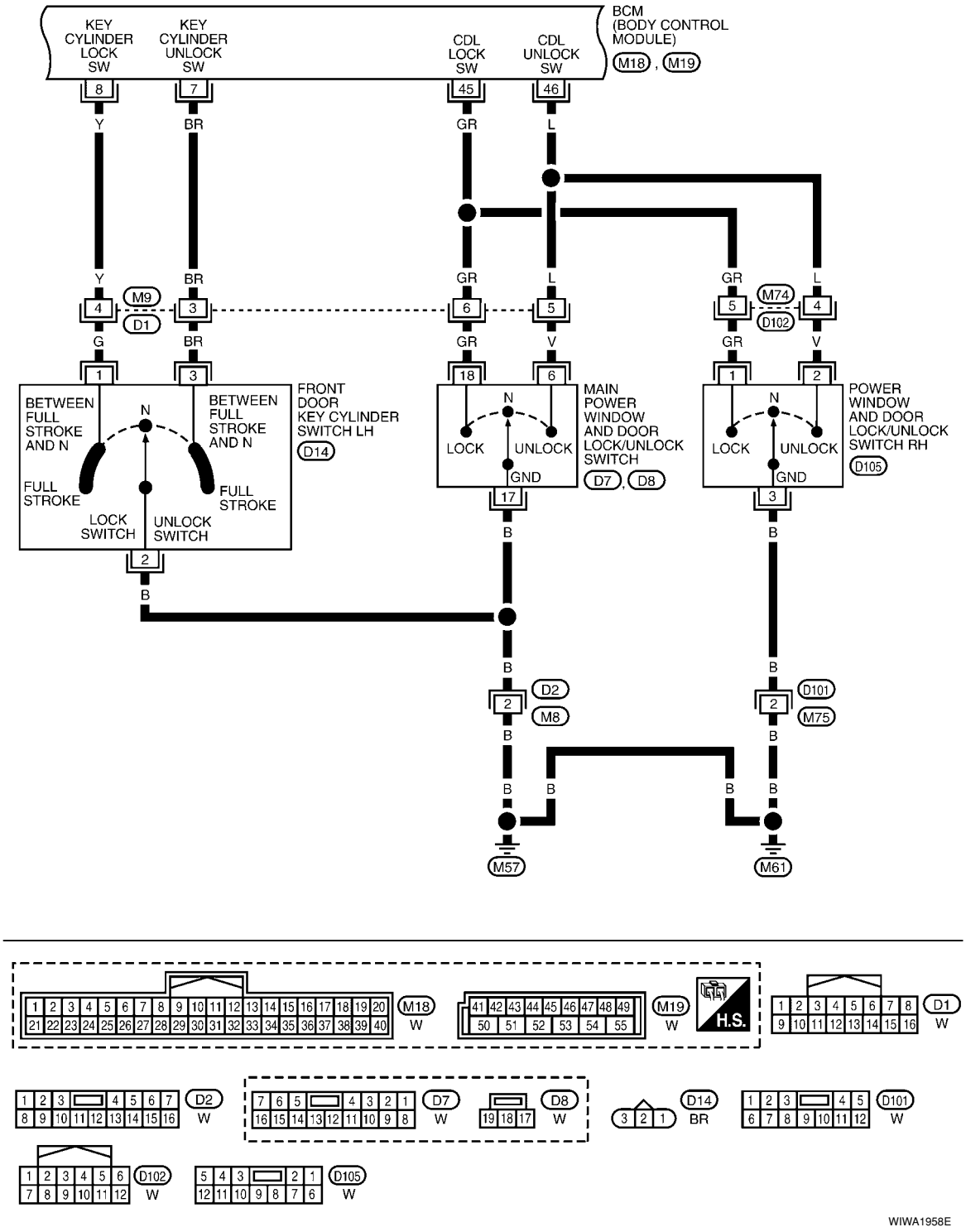

WIWA1958E

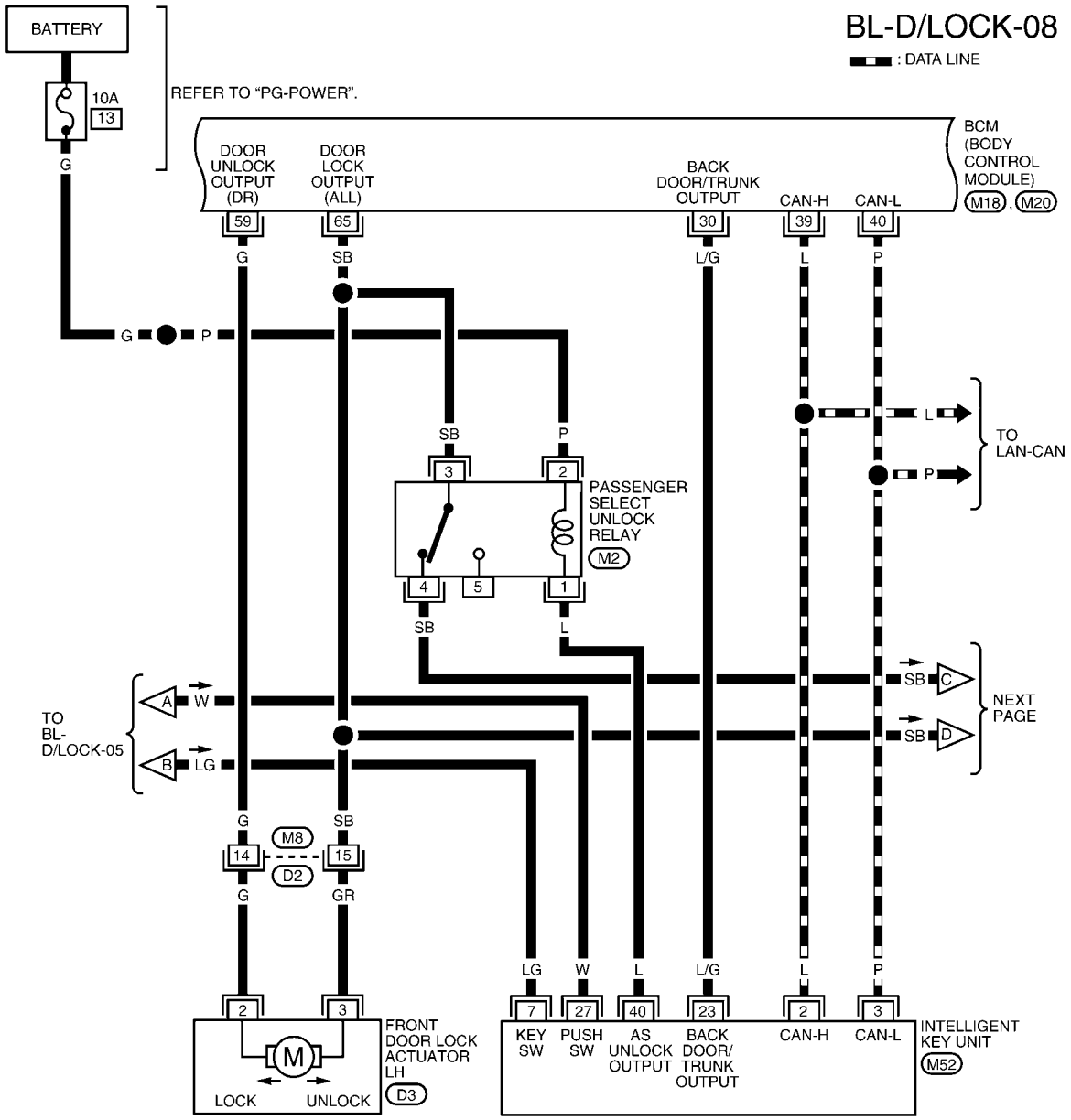
BL-D/LOCK-08
: DATA LINE
BATTERY
10A
13
REFER TO "PG-POWER".
BCM (BODY CONTROL MODULE)
M18, M20
DOOR UNLOCK OUTPUT (DR)
DOOR LOCK OUTPUT (ALL)
BACK DOOR/TRUNK OUTPUT
CAN-H
CAN-L
TO LAN-CAN
PASSENGER SELECT UNLOCK RELAY
M2
TO BL-D/LOCK-05
NEXT PAGE
M8
D2
FRONT DOOR LOCK ACTUATOR LH
D3
LOCK
UNLOCK
KEY SW
PUSH SW
AS UNLOCK OUTPUT
BACK DOOR/ TRUNK OUTPUT
CAN-H
CAN-L
INTELLIGENT KEY UNIT
M52
H.S.
WIWA2268E

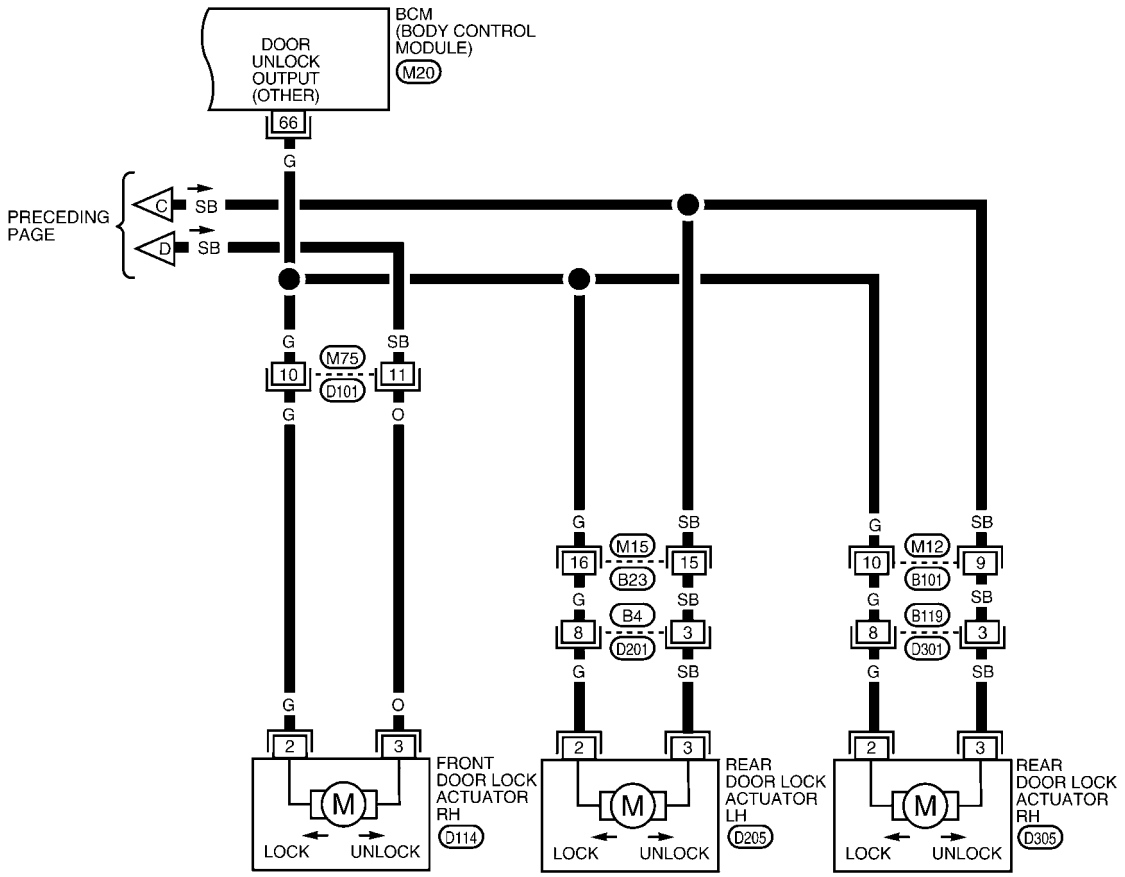

WIWA1960E

Terminal and Reference Value for BCM

INFOID:0000000001703960

Refer to BCS-11, "Terminal and Reference Value for BCM" .

Work Flow

INFOID:0000000001703961

1. Check the symptom and customer's requests.
2. Understand the outline of system. Refer to BL-22, "System Description" .

3. According to the trouble diagnosis chart, repair or replace the cause of the malfunction. Refer to BL-103, "Trouble Diagnosis Symptom Chart" .
4. Does power door lock system operate normally? OK: GO TO 5, NG: GO TO 3.
5. Inspection End.

CONSULT-III Function (BCM)

INFOID:0000000001703962

CONSULT-III can display each diagnostic item using the diagnostic test modes shown following.

BCM diagnostic test item	Diagnostic mode	Description
Inspection by part	WORK SUPPORT	Supports inspections and adjustments. Commands are transmitted to the BCM for setting the status suitable for required operation, input/output signals are received from the BCM and received date is displayed.
	DATA MONITOR	Displays BCM input/output data in real time.
	ACTIVE TEST	Operation of electrical loads can be checked by sending drive signal to them.
	SELF-DIAG RESULTS	Displays BCM self-diagnosis results.
	CAN DIAG SUPPORT MNTR	The result of transmit/receive diagnosis of CAN communication can be read.
	ECU PART NUMBER	BCM part number can be read.
	CONFIGURATION	Performs BCM configuration read/write functions.

WORK SUPPORT

Work item	Description
DOOR LOCK-UNLOCK SET	Select unlock mode can be changed in this mode. Selects ON-OFF of select unlock mode.
ANTI-LOCK OUT SET	Key reminder door mode can be changed in this mode. Selects ON-OFF of key reminder door mode.

DATA MONITOR

Monitor item	Content
IGN ON SW	Indicates [ON/OFF] condition of ignition switch in ON position.
KEY ON SW	Indicates [ON/OFF] condition of key switch.
CDL LOCK SW	Indicates [ON/OFF] condition of lock signal from door lock and unlock switch.
CDL UNLOCK SW	Indicates [ON/OFF] condition of unlock signal from door lock and unlock switch.
DOOR SW-DR	Indicates [ON/OFF] condition of front door switch LH.
DOOR SW-AS	Indicates [ON/OFF] condition of front door switch RH.
DOOR SW-RR	Indicates [ON/OFF] condition of rear door switch RH.
DOOR SW-RL	Indicates [ON/OFF] condition of rear door switch LH.
BACK DOOR SW	Indicates [ON/OFF] condition of back door switch.
KEY CYL LK-SW	Indicates [ON/OFF] condition of lock signal from key cylinder.
KEY CYL UN-SW	Indicates [ON/OFF] condition of unlock signal from key cylinder.
KEYLESS LOCK*	Indicates [ON/OFF] condition of lock signal from keyfob.
KEYLESS UNLOCK*	Indicates [ON/OFF] condition of unlock signal from keyfob.
I-KEY LOCK**	Indicates [ON/OFF] condition of lock signal from door request switch.
I-KEY UNLOCK**	Indicates [ON/OFF] condition of unlock signal from door request switch.

*: With Remote Keyless Entry system

**: With Intelligent Key system

ACTIVE TEST

Test item	Content
ALL LOCK	This test is able to check all door lock actuators lock operation. These actuators lock when "ON" on CONSULT–III screen is touched.
ALL UNLOCK	This test is able to check all door lock actuators unlock operation. These actuators unlock when "ON" on CONSULT–III screen is touched.
DR UNLOCK	This test is able to check front door lock actuator LH unlock operation.These actuators lock when "ON" on CONSULT–III screen is touched.
OTHER UNLOCK	This test is able to check door lock actuators (except front door lock actuator LH) unlock operation. These actuators unlock when "ON" on CONSULT–III screen is touched.

Trouble Diagnosis Symptom Chart

INFOID:0000000001703963

Symptom	Repair order	Refer to page
Key reminder door function does not operate properly.	1. BCM power supply and ground circuit check	BCS-15
	2. Door switch check (hatchback)	BL-37
	3. Door switch check (sedan)	BL-40
	4. Key switch (insert) check	BL-41
	5. Replace BCM.	BCS-18
Power door lock does not operate with door lock and unlock switch on main power window and door lock/unlock switch or power window and door lock/unlock switch RH	1. Door lock/unlock switch check	BL-42
	2. Replace BCM.	BCS-18
One or both rear door lock actuators do not operate.	1. Passenger select unlock relay circuit check	BL-48
Front door lock assembly LH (actuator) does not operate.	1. Front door lock assembly LH (actuator) check	BL-45
Specific door lock actuator does not operate.	1. Door lock actuator check (Front RH, Rear LH/RH)	BL-46
Power door lock does not operate with front door key cylinder switch operation.	1. Front door key cylinder switch check	BL-47
	2. Replace BCM.	BCS-18
All power door locks do not operate.	1. BCM power supply and ground circuit check	BCS-15
	2. Door lock/unlock switch check	BL-42
	3. Replace BCM.	BCS-18

BCM Power Supply and Ground Circuit

INFOID:0000000001703964

Refer to BCS-15, "BCM Power Supply and Ground Circuit Inspection" .

Door Switch Check (Hatchback)

INFOID:0000000001703965

1.CHECK DOOR SWITCHES INPUT SIGNAL

With CONSULT-III

Check door switches ("DOOR SW-DR", "DOOR SW-AS", "DOOR SW-RL", "DOOR SW-RR", "BACK DOOR SW") in DATA MONITOR mode with CONSULT–III. Refer to BL-36, "CONSULT-III Function (BCM)" .

- When doors are open:

DOOR SW-DR : ON
DOOR SW-AS : ON
DOOR SW-RL : ON
DOOR SW-RR : ON
BACK DOOR SW : ON

- When doors are closed:

DOOR SW-DR : OFF
DOOR SW-AS : OFF
DOOR SW-RL : OFF
DOOR SW-RR : OFF
BACK DOOR SW : OFF

Without CONSULT-III

Check voltage between BCM connector M18 or M19 terminals 12, 13, 43, 47, 48 and ground.

Connector	Item	Terminals (+)	Terminals (–)	Condition	Voltage (V) (Approx.)
M18	Front door switch RH	12	Ground	Open ↓ Closed	0 ↓ Battery voltage
	Rear door switch RH	13			
M19	Back door switch	43			
	Front door switch LH	47			
	Rear door switch LH	48			

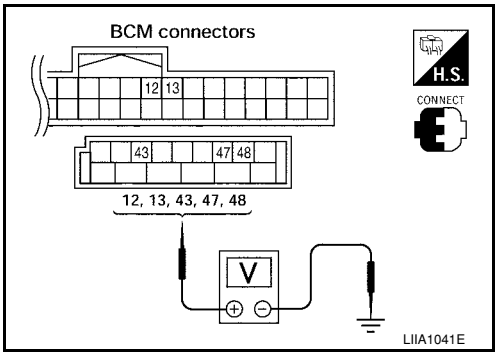

OK or NG

OK >> Door switch circuit is OK.
NG >> GO TO 2.

2. CHECK DOOR SWITCH CIRCUIT

1. Turn ignition switch OFF.
2. Disconnect door switch and BCM.
3. Check continuity between door switch connector (B) B8 (front LH), B108 (front RH) terminal 2 or (C) B6 (rear LH), B116 (rear RH) terminal 1 or back door lock assembly connector (D) D405 terminal 3 and BCM connectors (A) M18, M19 terminals 12, 13, 43, 47 and 48.

1 - 13 : Continuity should exist.
1 - 48 : Continuity should exist.
2 - 12 : Continuity should exist.
2 - 47 : Continuity should exist.
3 - 43 : Continuity should exist.

4. Check continuity between door switch connector (B) B8 (front LH), B108 (front RH) terminal 2 or (C) B6 (rear LH), B116 (rear RH) terminal 1 or back door lock assembly connector (D) D405 terminal 3 and ground.

1 - Ground : Continuity should not exist.
2 - Ground : Continuity should not exist.
3 - Ground : Continuity should not exist.

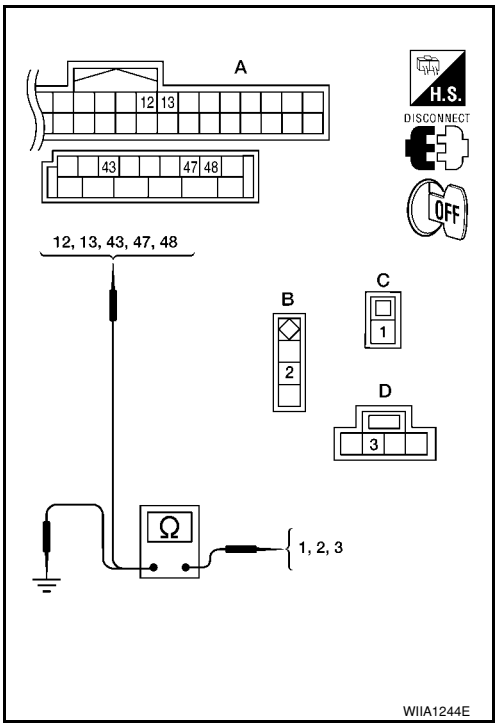

OK or NG

OK >> GO TO 3.
NG >> Repair or replace harness.

3. CHECK DOOR SWITCHES

FRONT AND REAR DOORS

Check continuity between front door switch terminal 2 or rear door switch terminal 1 and exposed metal of switch while pressing and releasing switch.

Door switch is released : Continuity should exist.
Door switch is pushed : Continuity should not exist.

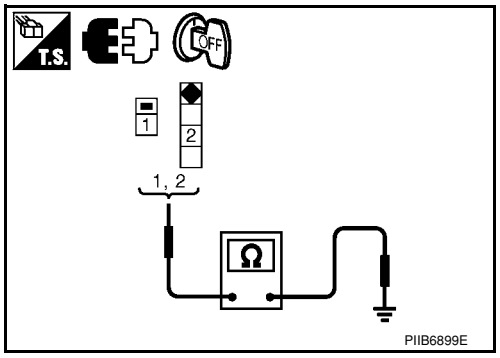

BACK DOOR

Check continuity between back door lock assembly connector (back door switch) terminals 3 and 4 while pressing (closing back door) and releasing (opening back door) switch.

When back door is open : Continuity should exist.
When back door is closed : Continuity should not exist.

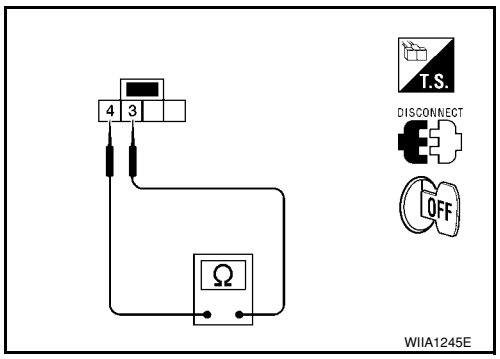

OK or NG

OK1 >> (Front and rear doors) Switch circuit is OK.
OK2 >> (Back door) GO TO 4.
NG >> Replace door switch.

4. CHECK BACK DOOR SWITCH GROUND

Check continuity between back door lock assembly connector D405 terminal 4 and ground.

4 - Ground : Continuity should exist.

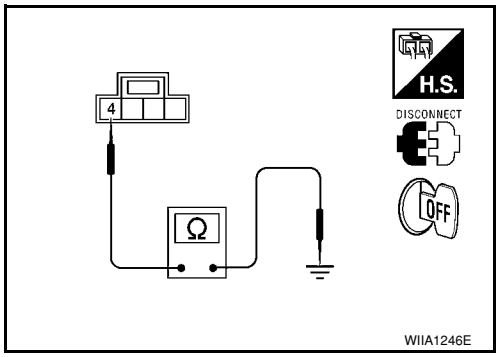

OK or NG

OK1 >> Back door switch circuit is OK (without Intelligent Key).
OK2 >> GO TO 5 (with Intelligent Key).
NG >> Repair or replace harness.

5. CHECK BACK DOOR SWITCH SIGNAL FOR SHORT

1. Disconnect Intelligent Key unit.
2. Check continuity between BCM connector M18 terminal 30 and ground.

30 - Ground : Continuity should not exist.

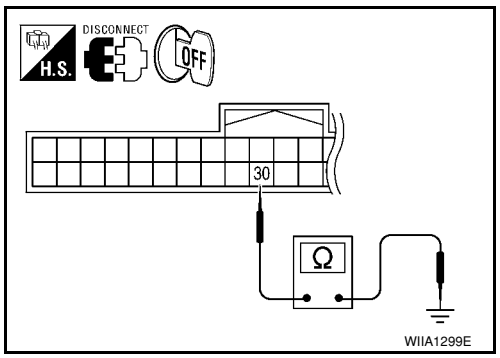

OK or NG

OK >> Back door switch circuit is OK.

NG >> Repair or replace harness.

Door Switch Check (Sedan)

INFOID:0000000001703966

1. CHECK DOOR SWITCHES INPUT SIGNAL

With CONSULT-III

Check door switches ("DOOR SW-DR", "DOOR SW-AS", "DOOR SW-RL", "DOOR SW-RR") in DATA MONITOR mode with CONSULT–III. Refer to BL-36, "CONSULT-III Function (BCM)" .

- When doors are open:

DOOR SW-DR	**: ON**
DOOR SW-AS	**: ON**
DOOR SW-RL	**: ON**
DOOR SW-RR	**: ON**

- When doors are closed:

DOOR SW-DR	**: OFF**
DOOR SW-AS	**: OFF**
DOOR SW-RL	**: OFF**
DOOR SW-RR	**: OFF**

Without CONSULT-III

Check voltage between BCM connector M18 or M19 terminals 12, 13, 47, 48 and ground.

Connector	Item	Terminals (+)	Terminals (–)	Condition	Voltage (V) (Approx.)
M19	Front door switch LH	47	Ground	Open ↓ Closed	0 ↓ Battery voltage
	Rear door switch LH	48			
M18	Front door switch RH	12			
	Rear door switch RH	13			

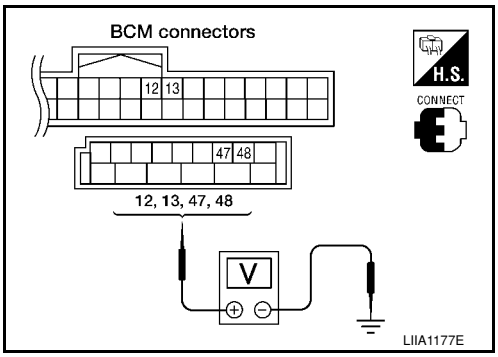

OK or NG

OK >> Door switch circuit is OK.

NG >> GO TO 2.

2. CHECK DOOR SWITCH CIRCUIT

1. Turn ignition switch OFF.
2. Disconnect door switch and BCM.
3. Check continuity between door switch connector B8 (Front LH) or B108 (Front RH) terminal 2, B6 (Rear LH) or B116 (Rear RH) terminal 1 and BCM connector M18, M19 terminals 12, 13, 47 and 48.

2 - 47	**: Continuity should exist.**
2 - 12	**: Continuity should exist.**
1 - 48	**: Continuity should exist.**
1 - 13	**: Continuity should exist.**

4. Check continuity between door switch connector B8 (Front LH) or B108 (Front RH) terminal 2, B6 (Rear LH) or B116 (Rear RH) terminal 1 and ground.

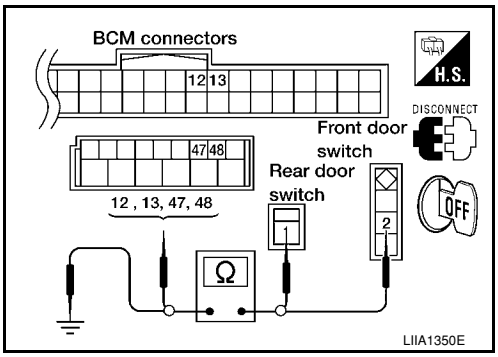

2 - Ground : Continuity should not exist.
1 - Ground : Continuity should not exist.

OK or NG

OK >> GO TO 3.
NG >> Repair or replace harness.

3. CHECK DOOR SWITCHES

Check continuity between door switch terminal and switch case ground.

Component	Terminals	Condition of switch	Continuity
Front door switch LH/RH	2 – Case ground	Pushed	No
		Released	Yes
Rear door switch LH/RH	1 – Case ground	Pushed	No
		Released	Yes

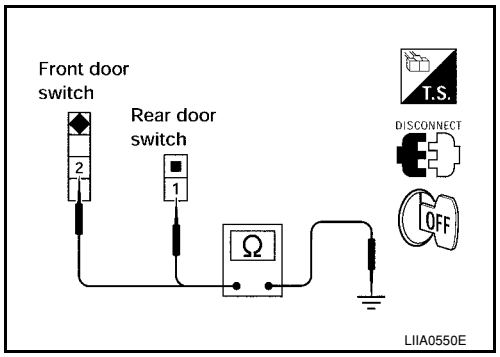

OK or NG

OK >> Check door switch case ground condition.
NG >> Replace door switch.

Key Switch (Insert) Check

INFOID:0000000001703967

1. CHECK KEY SWITCH INPUT SIGNAL

With CONSULT-III

Check key switch "KEY ON SW" in DATA MONITOR mode with CONSULT–III. Refer to BL-36, "CONSULT-III Function (BCM)" .

- When key is inserted into ignition key cylinder:

KEY ON SW : ON

- When key is removed from ignition key cylinder:

KEY ON SW : OFF

Without CONSULT-III

Check voltage between BCM connector and ground.

Connector	Terminals		Condition	Voltage (V) (Approx.)
	(+)	(–)		
M18	37	Ground	Key is inserted.	Battery voltage
			Key is removed.	0

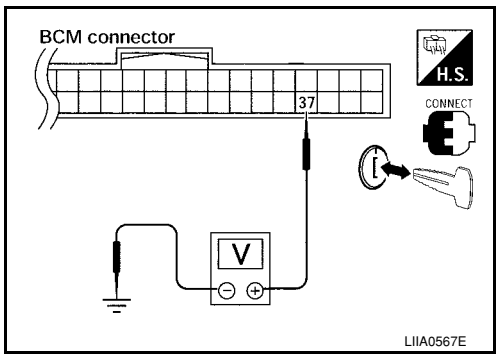

OK or NG

OK >> Key switch circuit is OK.
NG-1 >> GO TO 2 (with Intelligent Key).
NG-2 >> GO TO 3 (without Intelligent Key).

2. CHECK KEY SWITCH (WITH INTELLIGENT KEY)

1. Turn ignition switch OFF.
2. Disconnect key switch and ignition knob switch connector.
3. Check ignition knob switch key switch and ignition knob key switch.

Terminal		Condition		Continuity
Key switch and ignition knob switch				
1	2	Key	Inserted	Yes
			Removed	No

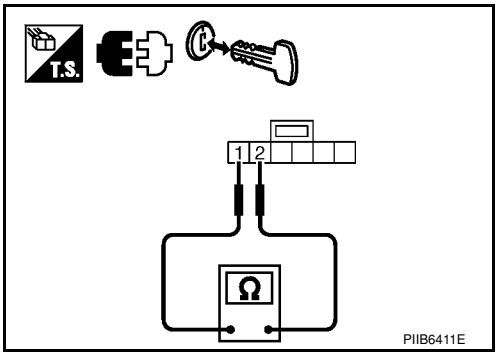

OK or NG

OK >> Check the following.
- 10A fuse (No. 31, located in fuse and fusible link block)
- Harness for open or short between key switch and ignition knob switch and fuse
- Harness for open or short between BCM and key switch and ignition knob switch

NG >> Replace key switch and ignition knob switch.

3. CHECK KEY SWITCH (WITHOUT INTELLIGENT KEY)

1. Turn ignition switch OFF.
2. Disconnect key switch and key lock solenoid connector.
3. Check key switch.

Terminals	Condition	Continuity
1 – 2	Key is inserted.	Yes
	Key is removed.	No

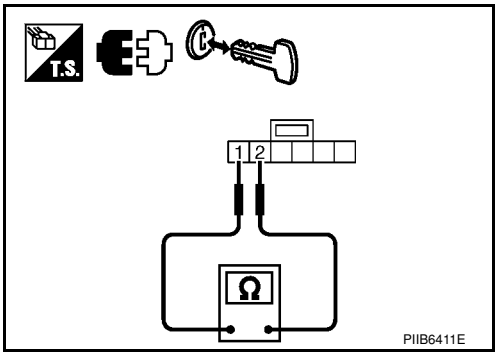

OK or NG

OK >> Check the following.
- 10A fuse [No. 14, located in fuse block (J/B)]
- Harness for open or short between key switch and fuse
- Harness for open or short between BCM and key switch

NG >> Replace key switch and key lock solenoid.

Door Lock and Unlock Switch Check

INFOID:0000000001703968

1. CHECK DOOR LOCK AND UNLOCK INPUT SIGNAL

With CONSULT-III

Check door lock and unlock switch (“CDL LOCK SW” and “CDL UNLOCK SW”) in DATA MONITOR mode with CONSULT-III.

Test item	Condition	
CDL LOCK SW	Door lock and unlock switch is turned to LOCK	: ON
	Other than above	: OFF
CDL UNLOCK SW	Door lock and unlock switch is turned to UNLOCK	: ON
	Other than above	: OFF

Without CONSULT-III

Check voltage between BCM connector and ground

Terminals			Door lock and unlock switch condition	Voltage (V) (Approx.)
(+)		(–)		
BCM connector	Terminal			
M19	45	Ground	Lock	0
			Neutral / Unlock	Battery voltage
	46		Unlock	0
			Neutral / Lock	Battery voltage

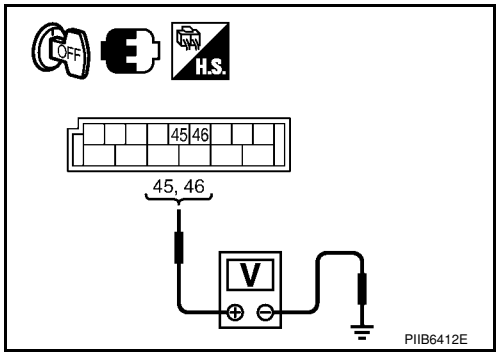

OK or NG

OK >> Door lock and unlock switch is OK.
NG >> GO TO 2.

2. CHECK DOOR LOCK/UNLOCK SWITCH

1. Turn ignition switch OFF.
2. Disconnect door lock/unlock switch.
3. Check continuity between main power window and door lock/unlock switch terminals 6, 17 and 18.

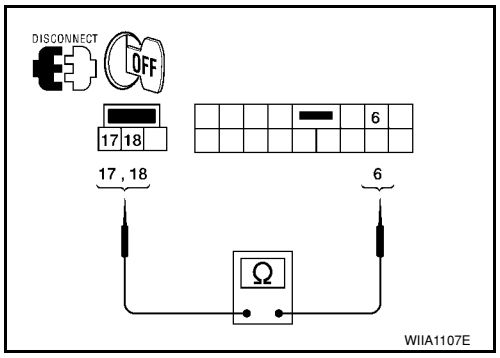

Terminal		Condition	Continuity
18	17	Lock	Yes
		Unlock/Neutral	No
6		Unlock	Yes
		Lock/Neutral	No

4. Check continuity between power window and door lock/unlock switch RH terminals 1, 2 and 3.

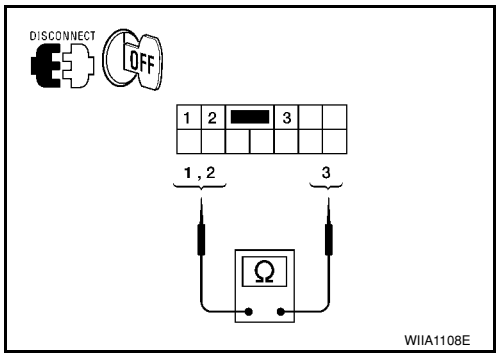

Terminal		Condition	Continuity
1	3	Lock	Yes
		Unlock/Neutral	No
2		Unlock	Yes
		Lock/Neutral	No

OK or NG

OK >> GO TO 3.
NG >> Replace door lock/unlock switch.

3. CHECK DOOR LOCK/UNLOCK SWITCH GROUND HARNESS

1. Disconnect main power window and door lock/unlock switch or power window and door lock/unlock switch RH.
2. Check continuity between main power window and door lock/unlock switch connector D8 terminal 17 and ground.

17 - Ground : Continuity should exist.

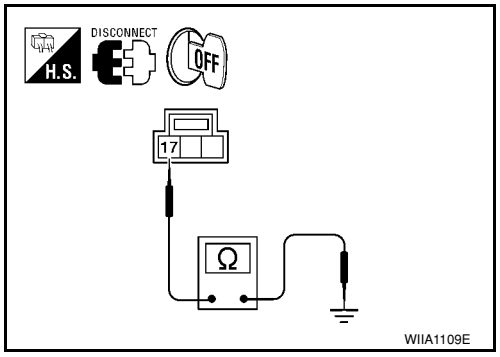

3. Check continuity between power window and door lock/unlock switch RH connector D105 terminal 3 and ground

3 - Ground : Continuity should exist.

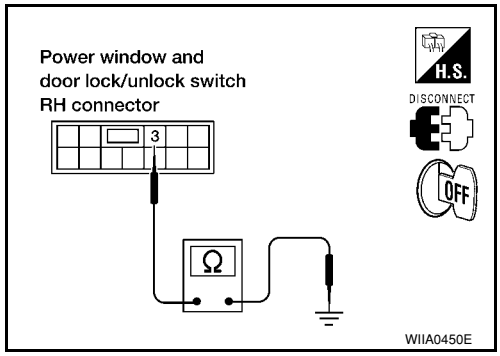

OK or NG

OK >> GO TO 4.
NG >> Repair or replace harness.

4. CHECK DOOR LOCK SWITCH CIRCUIT

1. Disconnect BCM.
2. Check continuity between BCM connector M19 (A) terminal 45 and main power window and door lock/unlock switch connector D8 (B) terminal 18 or power window and door lock/unlock switch RH connector D105 (C) terminal 1.

1 - 45 : Continuity should exist.
18 - 45 : Continuity should exist.

3. Check continuity between BCM connector M19 terminal 45 and ground.

45 - Ground : Continuity should not exist.

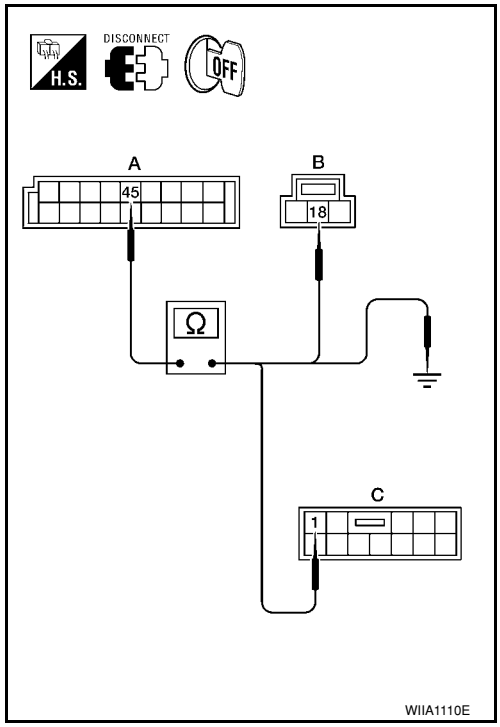

4. Check continuity between BCM connector M19 (A) terminal 46 and main power window and door lock/unlock switch LH connector D7 (B) terminal 6 or power window and door lock/unlock switch RH connector D105 (C) terminal 2.

2 - 46 **: Continuity should exist.**
6 - 46 **: Continuity should exist.**

5. Check continuity between BCM connector M19 terminal 46 and ground.

46 - Ground **: Continuity should not exist.**

OK or NG

OK >> Replace BCM. Refer to BCS-18, "Removal and Installation of BCM" .
NG >> Repair or replace harness.

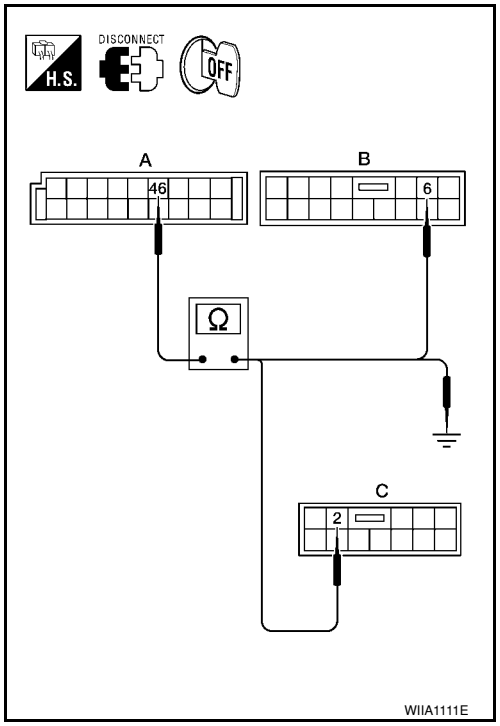

Front Door Lock Assembly LH (Actuator) Check

INFOID:0000000001703969

1. CHECK FRONT DOOR LOCK ASSEMBLY LH (ACTUATOR) HARNESS

1. Turn ignition switch OFF.
2. Disconnect BCM and front door lock assembly LH (actuator).
3. Check continuity between BCM connector (A) M20 terminals 59, 65 and front door lock assembly LH (actuator) connector (B) D3 terminals 2, 3.

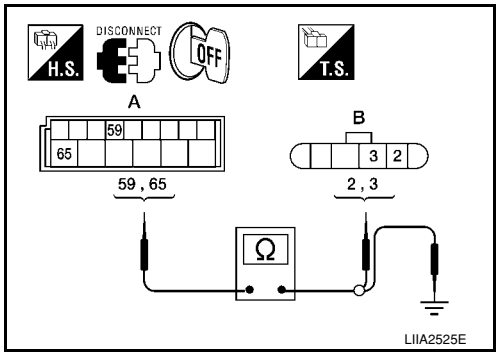

Connector	Terminal	Connector	Terminal	Continuity
A: M20	59	B: D3	2	Yes
	65		3	Yes

4. Check continuity between BCM connector (A) M20 terminals 59, 65 and body ground.

Connector	Terminals		Continuity
A: M20	59	Ground	No
	65		No

OK or NG

OK >> GO TO 2.
NG >> Repair or replace harness.

2. CHECK FRONT DOOR LOCK ASSEMBLY LH SIGNAL

1. Reconnect BCM.

2. Check voltage between BCM connector M20 terminals 59, 65 and ground.

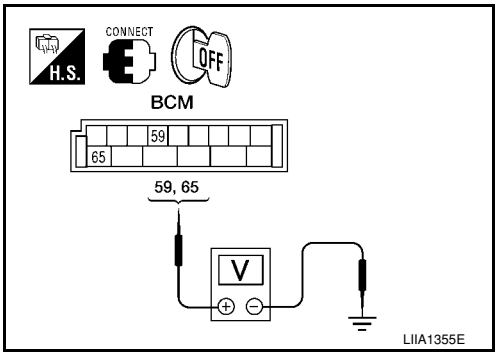

Connector	Terminals		Condition	Voltage (V) (Approx.)
	(+)	(-)		
M20	59	Ground	Main power window and door lock/unlock switch is turned to UNLOCK	0 → Battery voltage
	65		Main power window and door lock/unlock switch is turned to LOCK	0 → Battery voltage

OK or NG

OK >> Replace front door lock assembly LH (actuator). Refer to BL-150, "Removal and Installation" .
NG >> Replace BCM. Refer to BCS-18, "Removal and Installation of BCM" .

Door Lock Actuator Check (Front RH and Rear LH/RH)

INFOID:0000000001703970

1. CHECK DOOR LOCK ACTUATOR HARNESS

NOTE:
For models with Intelligent Key, insure that passenger select unlock relay remains connected during this test.

1. Turn ignition switch OFF.
2. Disconnect BCM and each door lock actuator.
3. Check continuity between BCM connector (A) M20 terminals 65, 66 and front door lock actuator RH connector (B) D114, rear door lock actuator RH connector (B) D305, rear door lock actuator LH connector (C) D205 terminals 2, 3.

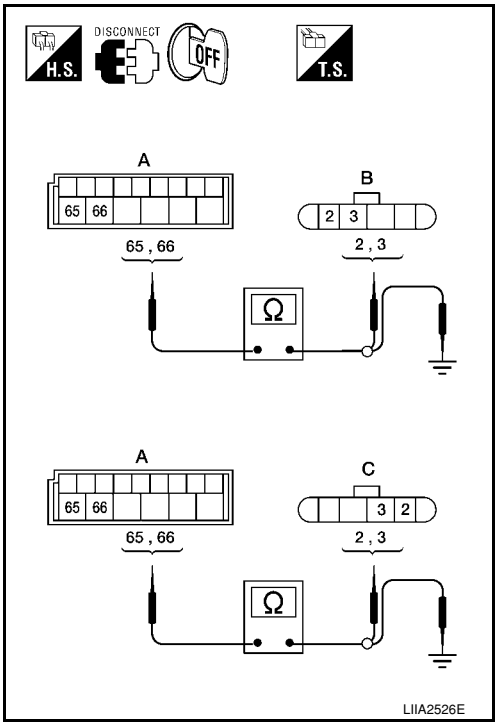

Connector	Terminal	Connector	Terminal	Continuity
A: M20	65	B: D114 C: D205 D: D305	3	Yes
	66		2	Yes

4. Check continuity between BCM connector (A) M20 terminals 65, 66 and body ground.

Connector	Terminals		Continuity
A: M20	65	Ground	No
	66		No

OK or NG

OK >> GO TO 2.
NG >> Check the following:
- Without Intelligent Key: Repair or replace harness.
- With Intelligent Key: For front doors, repair or replace harness.
- With Intelligent Key: For rear door, repair or replace harness or passenger select unlock relay.

2. CHECK DOOR LOCK ACTUATOR SIGNAL

1. Reconnect BCM.
2. Check voltage between BCM connector M20 terminals 65, 66 and ground.

Connector	Terminals (+)	Terminals (-)	Condition	Voltage (V) (Approx.)
M20	65	Ground	Main power window and door lock/unlock switch is turned to UNLOCK	0 → Battery voltage
	66		Main power window and door lock/unlock switch is turned to LOCK	0 → Battery voltage

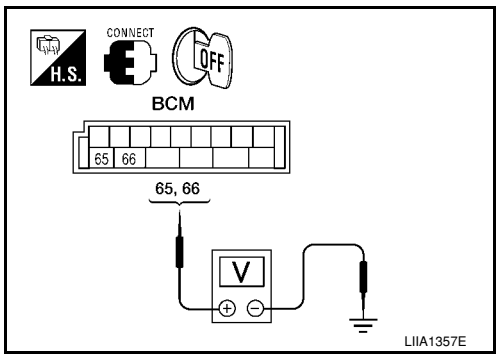

OK or NG
OK >> Replace front door lock assembly RH or rear door lock actuator LH/RH. Refer to BL-150, "Removal and Installation" or BL-153, "Removal and Installation" .
NG >> Replace BCM. Refer to BCS-18, "Removal and Installation of BCM" .

Front Door Key Cylinder Switch LH Check

INFOID:0000000001703971

1. CHECK FRONT DOOR KEY CYLINDER SWITCH LH

With CONSULT-III
Check front door key cylinder switch ("KEY CYL LK-SW") and ("KEY CYL UN-SW) in DATA MONITOR mode in CONSULT–III. Refer to BL-36, "CONSULT-III Function (BCM)" .
- When key inserted in front key cylinder is turned to LOCK:

KEY CYL LK-SW : ON

- When key inserted in front key cylinder is turned to UNLOCK:

KEY CYL UN-SW : ON

Without CONSULT-III
Check voltage between BCM connector M18 terminals 7, 8 and ground.

Connector	Terminals (+)	Terminals (–)	Condition	Voltage (V) (Approx.)
M18	7	Ground	Neutral/Lock	5
			Unlock	0
	8		Neutral/Unlock	5
			Lock	0

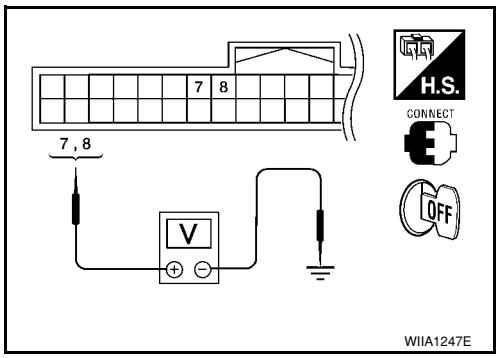

OK or NG
OK >> Front door key cylinder switch LH signal is OK.
NG >> GO TO 2.

2. CHECK FRONT DOOR KEY CYLINDER SWITCH LH GROUND HARNESS

1. Turn ignition switch OFF.
2. Disconnect front door key cylinder switch LH.
3. Check continuity between front door key cylinder switch LH connector D14 terminal 2 and body ground.

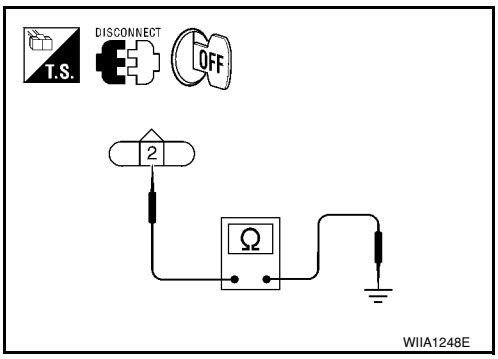

Connector	Terminals	Continuity
D14	2 – Ground	Yes

OK or NG

OK >> GO TO 3.
NG >> Repair or replace harness.

3. CHECK DOOR KEY CYLINDER SWITCH LH

Check continuity between front door key cylinder switch LH terminals.

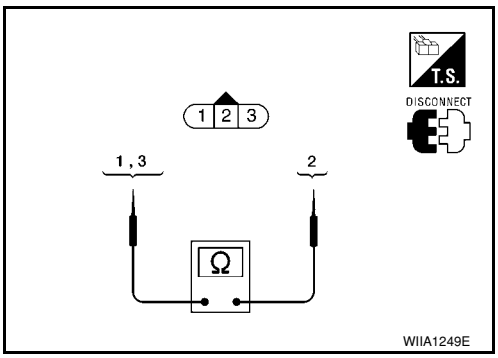

Terminals	Door key cylinder switch position	Continuity
2 – 1	Neutral/Unlock	No
	Lock	Yes
2 – 3	Neutral/Lock	No
	Unlock	Yes

OK or NG

OK >> GO TO 4.
NG >> Replace front door key cylinder switch LH. Refer to BL-150 .

4. CHECK DOOR KEY CYLINDER HARNESS

1. Disconnect BCM connector M18.
2. Check continuity between BCM connector (A) M18 terminals 7, 8 and front door key cylinder switch LH connector (B) D14 terminals 1, 3 and body ground.

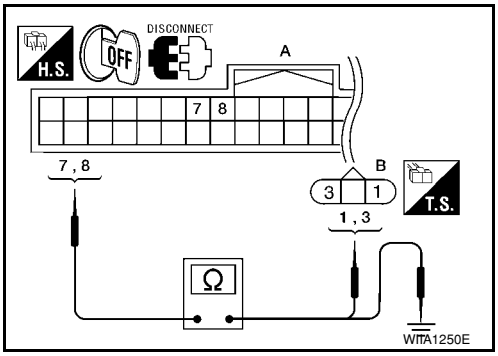

Connector	Terminal	Connector	Terminal	Continuity
A: M18	7	B: D14	3	Yes
	8		1	Yes
	7	Ground		No
	8	Ground		No

OK or NG

OK >> Front door key cylinder switch LH circuit is OK.
NG >> Repair or replace harness.

Passenger Select Unlock Relay Circuit Inspection (With Intelligent Key)

INFOID:0000000001703972

1. CHECK PASSENGER SELECT UNLOCK RELAY CIRCUIT

NOTE:
Passenger select unlock relay must remain connected during this step.

1. Turn ignition switch OFF.
2. Disconnect BCM and inoperative rear door lock actuator.

3. Check continuity between BCM connector (A) M20 terminal 65 and rear door lock actuator LH connector (B) D205 terminal 3 or rear door lock actuator RH connector (C) D305 Terminal 3.

65 - 3 : Continuity should exist.

4. Check continuity between BCM connector M20 terminal 65 and body ground.

65 - Ground : Continuity should not exist.

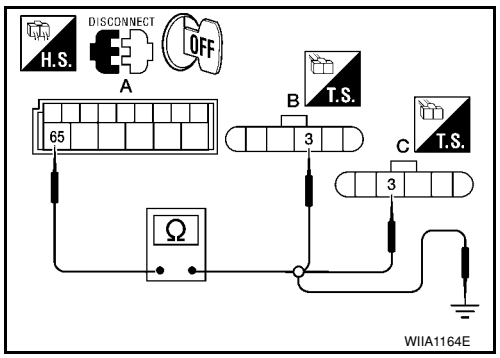

OK or NG

OK >> GO TO 4.
NG >> GO TO 2.

2. CHECK PASSENGER SELECT UNLOCK RELAY INPUT

1. Disconnect passenger select unlock relay.
2. Check continuity between BCM connector (A) M20 terminal 65 and passenger select unlock relay connector (B) M2 terminal 3.

65 - 3 : Continuity should exist.

3. Check continuity between BCM connector (A) M20 terminal 65 and body ground.

65 - Ground : Continuity should not exist.

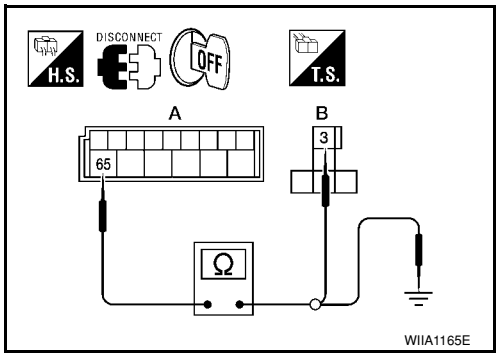

OK or NG

OK >> GO TO 3.
NG >> Repair or replace harness between BCM and relay.

3. CHECK PASSENGER SELECT UNLOCK RELAY OUTPUT

1. Disconnect inoperative rear door lock actuator.
2. Check continuity between passenger select unlock relay connector (A) M2 terminal 4 and rear door lock actuator LH connector (B) D205 or rear door lock actuator RH connector (C) D305 terminal 3.

4 - 3 : Continuity should exist.

3. Check continuity between passenger select unlock relay connector (A) M2 terminal 4 and ground.

4 - Ground : Continuity should not exist.

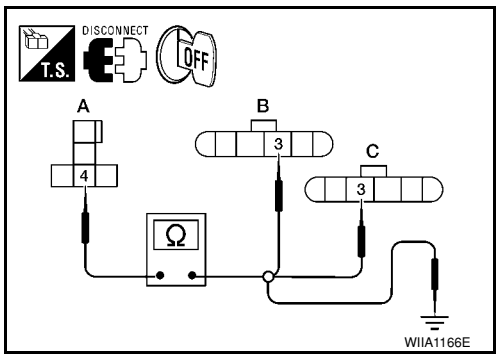

OK or NG

OK >> Replace passenger select unlock relay.
NG >> Repair or replace harness between relay and actuator.

4. CHECK REAR DOOR LOCK ACTUATOR ASSEMBLY

1. Reconnect BCM.

2. Check voltage between rear door lock actuator connector LH (A) D205 or rear door lock actuator connector RH (B) D305 terminals 2 and 3.

Connector	Terminals		Condition	Voltage (V) (Approx.)
	(+)	(-)		
A: D205 (LH) B: D305 (RH)	3	2	Main power window and door lock/unlock switch is turned to LOCK	0 → Battery voltage

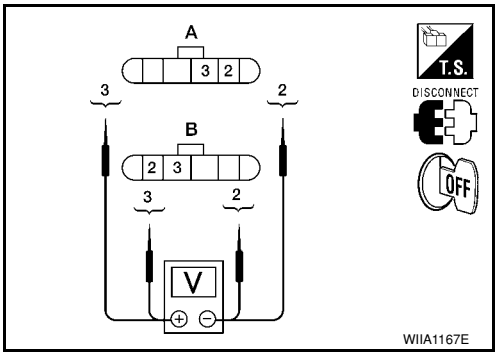

3. Check voltage between rear door lock actuator connector LH (A) D205 or rear door lock actuator connector RH (B) D305 terminals 2 and 3.

Connector	Terminals		Condition	Voltage (V) (Approx.)
	(+)	(-)		
A: D205 (LH) B: D305 (RH)	2	3	Main power window and door lock/unlock switch is turned to UNLOCK	0 → Battery voltage

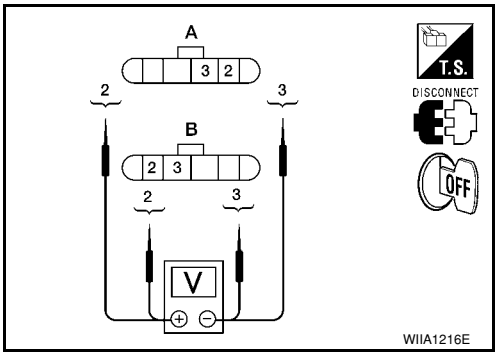

OK or NG

OK >> Replace rear door lock actuator. Refer to BL-153, "Removal and Installation" .
NG >> Repair or replace harness between actuator and splice.

REMOTE KEYLESS ENTRY SYSTEM

Component Parts and Harness Connector Location

INFOID:0000000001703973

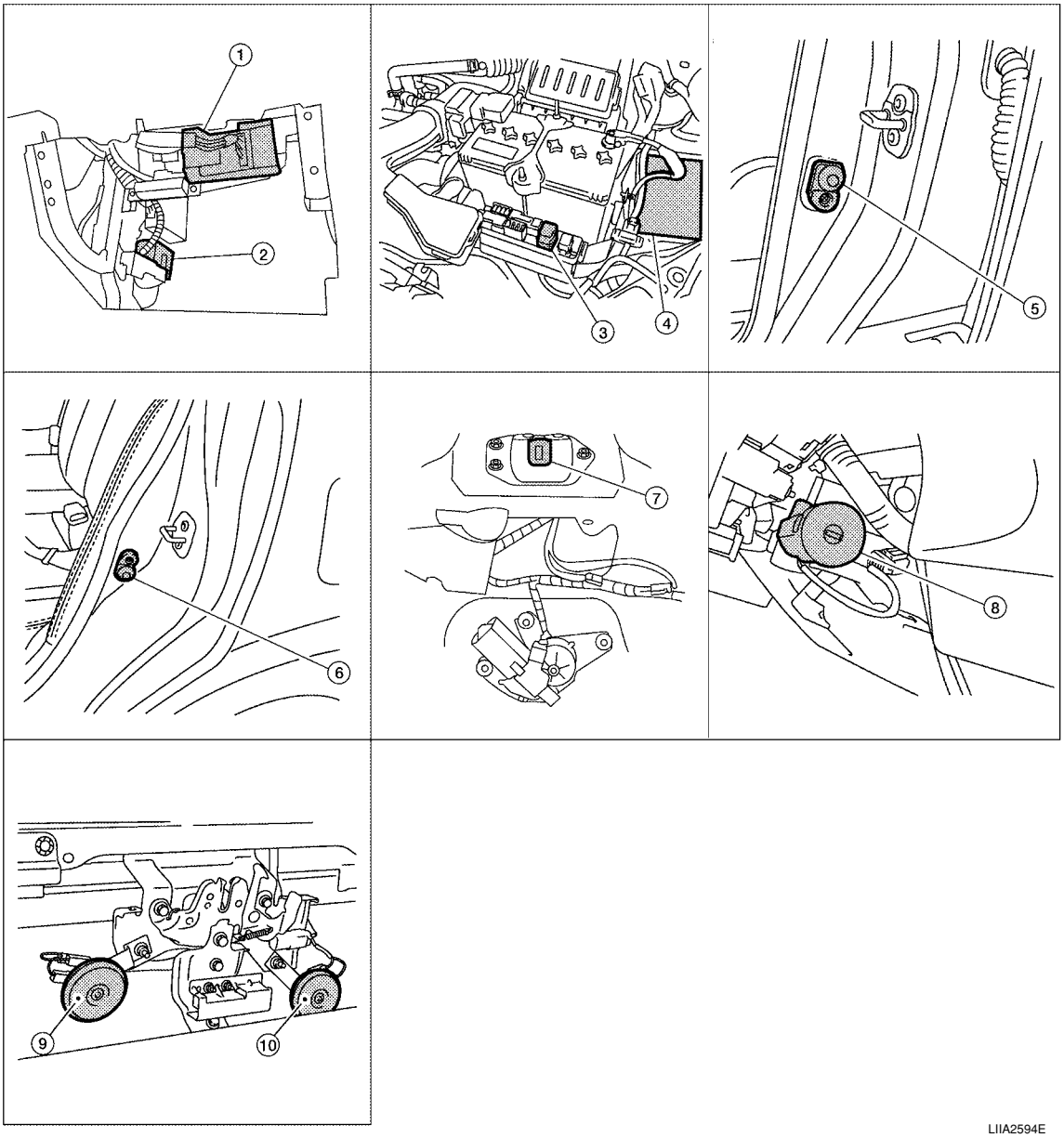

LIIA2594E

1. BCM M18, M19, M20 (view with glove box removed)
2. Remote keyless entry receiver M23
3. Horn relay H-1 (front of battery)
4. IPDM E/R E46, E48
5. Front door switch LH B8, RH B108
6. Rear door switch LH B6, RH B116
7. Back door lock assembly (back door switch) D405 (hatchback view with back door open)
8. Key switch and key lock solenoid M27
9. Horn (low) E18, E20
10. Horn (high) E21, E22

System Description

INFOID:0000000001703974

INPUTS

Power is supplied at all times
- through 40A fusible link (letter **g** , located in the fuse and fusible link box)
- to BCM terminal 70
- through 10A fuse [No. 8, located in the fuse block (J/B)]
- to BCM terminal 57.

When the key switch is ON (key is inserted in ignition key cylinder), power is supplied
- through 10A fuse [No. 14, located in the fuse block (J/B)]
- through key switch terminals 2 and 1
- to BCM terminal 37.

When the ignition switch is ACC or ON, power is supplied
- through 10A fuse [No. 20, located in the fuse block (J/B)]
- to BCM terminal 11.

Ground is supplied
- to BCM terminal 67
- through body grounds M57 and M61.

When the front door switch LH is ON (door is OPEN), ground is supplied
- to BCM terminal 47
- through front door switch LH terminal 2
- through front door switch LH case ground.

When the front door switch RH is ON (door is OPEN), ground is supplied
- to BCM terminal 12
- through front door switch RH terminal 2
- through front door switch RH case ground.

When the rear door switch LH is ON (door is OPEN), ground is supplied
- to BCM terminal 48
- through rear door switch LH terminal 1
- through rear door switch LH case ground.

When the rear door switch RH is ON (door is OPEN), ground is supplied
- to BCM meter terminal 13
- through rear door switch RH terminal 1
- through rear door switch RH case ground.

When the back door lock assembly (back door switch) (hatchback) is ON (back door is OPEN), ground is supplied
- to BCM terminal 43
- through back door lock assembly (back door switch) terminals 3 and 4
- through body grounds B117, B132 and D402.

Keyfob signal is inputted to BCM from remote keyless entry receiver.
The remote keyless entry system controls operation of the
- power door lock
- hazard reminder
- auto door lock
- panic alarm
- room lamp

OPERATED PROCEDURE

Power Door Lock Operation

BCM receives a LOCK signal from keyfob. BCM locks all doors with input of LOCK signal from keyfob.
BCM receives a UNLOCK signal from keyfob. BCM unlocks all doors with input of UNLOCK signal from keyfob.

Hazard and Horn Reminder

When the doors are locked or unlocked by keyfob, power is supplied to sound horns and flash hazard warning lamps as follows
- LOCK operation: 3 or 4 mode (lamps flash twice)
- UNLOCK operation: 2 or 4 mode (lamps flash once)
- Horns sound once with LOCK function when this feature is set ON.

The hazard reminder has modes 1, 2, 3 or 4. The horn reminder can be turned ON/OFF with any LOCK mode.

Operating function of hazard reminder

	Mode 1		Mode 2		Mode 3		Mode 4	
Keyfob operation	Lock	Unlock	Lock	Unlock	Lock	Unlock	Lock	Unlock
Hazard warning lamp flash	—	—	—	Twice	Once	—	Once	Twice
Horns sound (ON/OFF)	ON: once	—	ON: once	—	ON: once	—	ON: once	—

Hazard and horn reminders do not operate if any door switch is ON (any door is OPEN).

How to change hazard and horn reminder modes

With CONSULT-III

Hazard reminder can be changed using “HAZARD LAMP SET” mode in “WORK SUPPORT”.
Horn reminder can be changed using “HORN CHIRP SET” mode in “WORK SUPPORT”.
Refer to BL-58, "CONSULT-III Function (BCM)" .

Without CONSULT-III

Refer to Owner's Manual for instructions.

Auto Door Lock Operation

Auto lock function signal is sent for operation when any of the following signals are not sent within 1 minute after the unlock signal is sent from the keyfob:
- when door switch is turned ON for open.
- when the key switch is turned ON.
- when the lock signal is sent from the keyfob.

Auto door lock mode can be changed using “AUTO LOCK SET” mode in “WORK SUPPORT”.
Refer to BL-58, "CONSULT-III Function (BCM)" .

Panic Alarm Operation

When key switch is OFF (when ignition key is not inserted in key cylinder), BCM turns on and off horn intermittently with input of PANIC ALARM signal from keyfob.
BCM outputs to IPDM E/R for panic alarm signal (horn signal) as DATA LINE (CAN H line and CAN L line).
The alarm automatically turns off after 25 seconds or when BCM receives any signal from keyfob.
Panic alarm operation mode can be changed using “PANIC ALARM SET” mode in “WORK SUPPORT”.
Refer to BL-58, "CONSULT-III Function (BCM)" .

Interior Lamp Operation

When the following conditions come:
- condition of interior lamp switch is in the DOOR position;
- door switch OFF (when all the doors are closed);

Remote keyless entry system turns on interior lamp (for 30 seconds) with input of UNLOCK signal from keyfob. For detailed description, refer to LT-89 .

CAN Communication System Description

INFOID:0000000001703975

Refer to LAN-6 .

Schematic

INFOID:0000000001703976

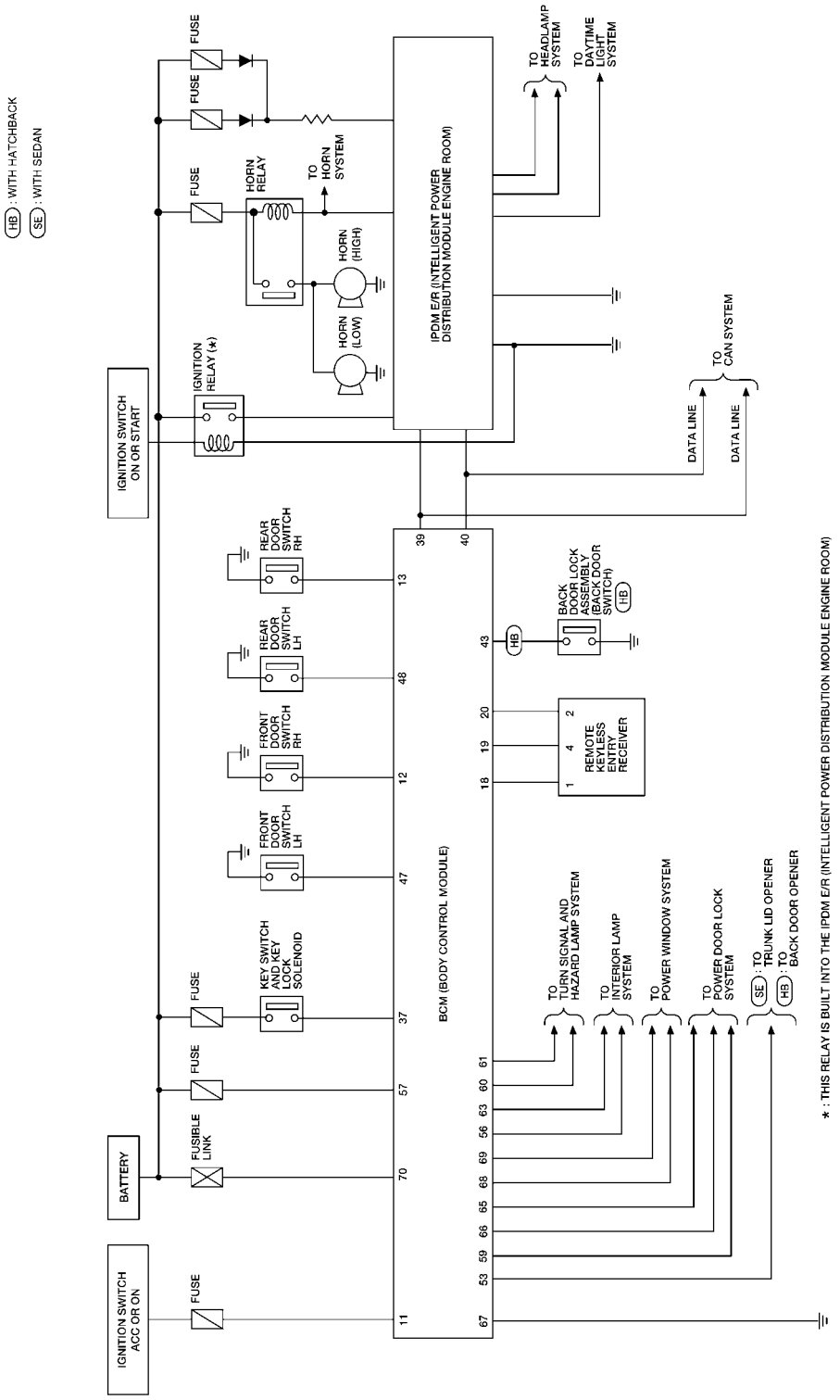

WIWA2269E

Wiring Diagram - KEYLES -

INFOID:0000000001703977

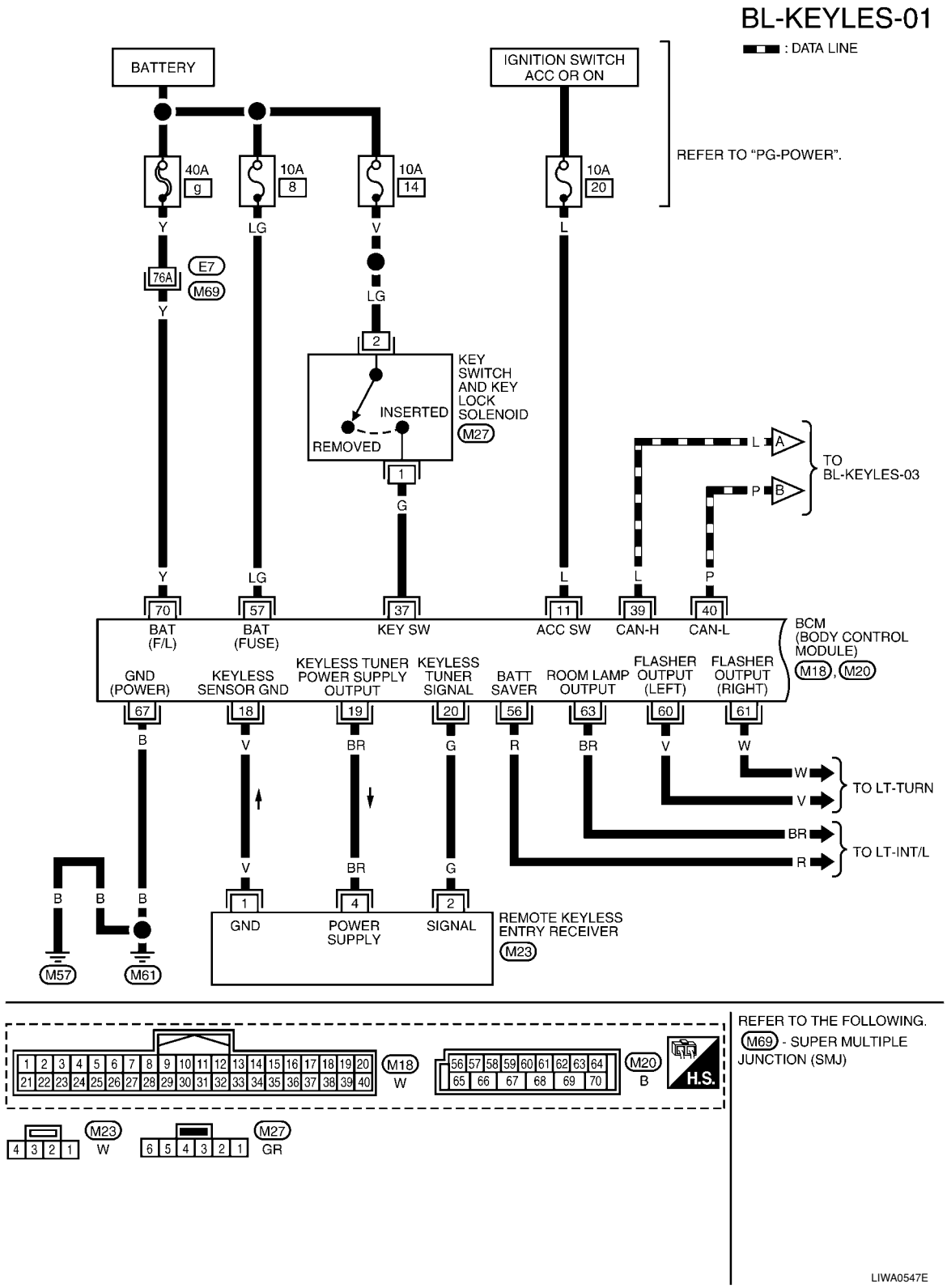

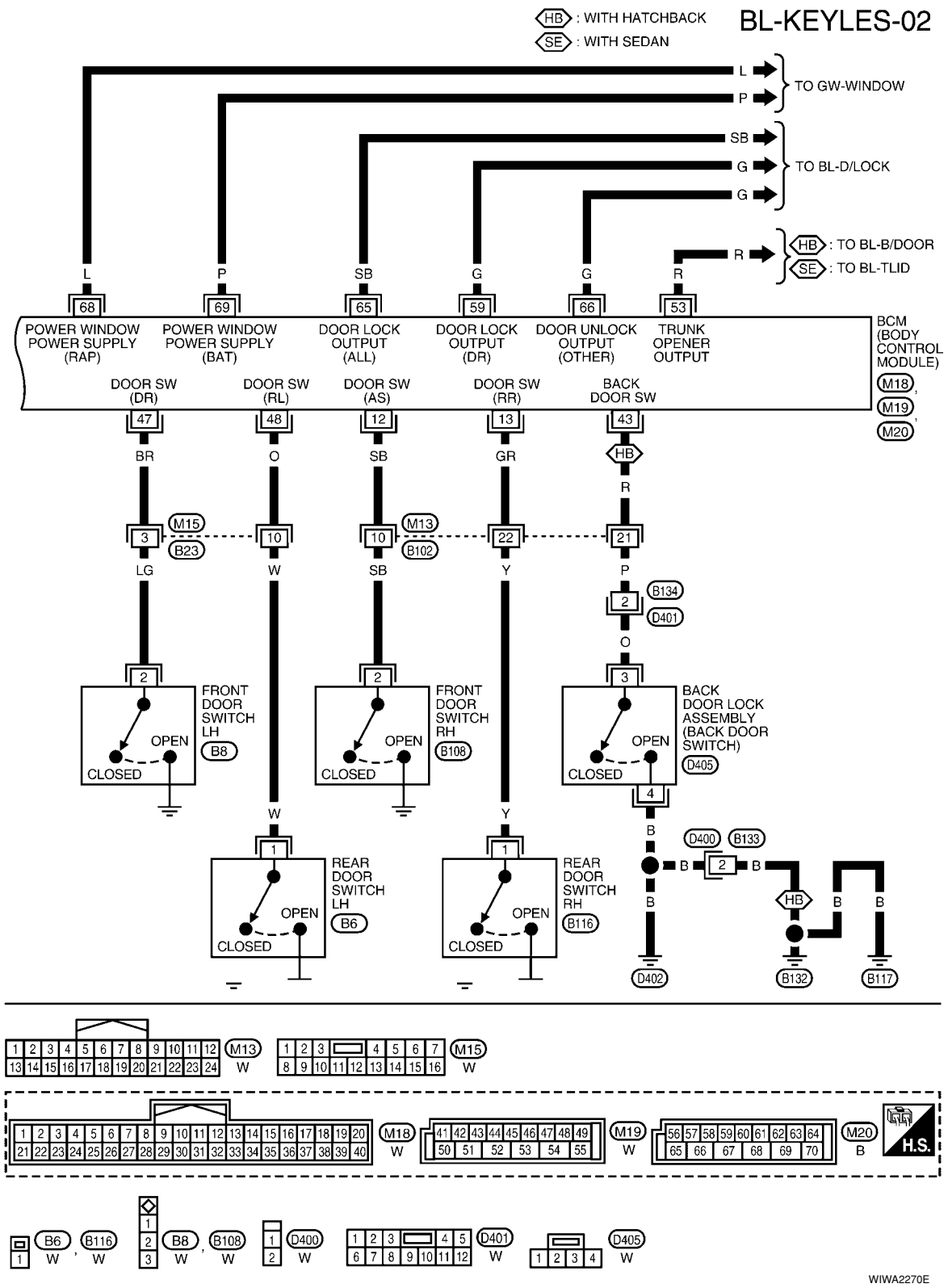
HB : WITH HATCHBACK
SE : WITH SEDAN
BL-KEYLES-02
TO GW-WINDOW
TO BL-D/LOCK
HB : TO BL-B/DOOR
SE : TO BL-TLID
POWER WINDOW POWER SUPPLY (RAP)
POWER WINDOW POWER SUPPLY (BAT)
DOOR LOCK OUTPUT (ALL)
DOOR LOCK OUTPUT (DR)
DOOR UNLOCK OUTPUT (OTHER)
TRUNK OPENER OUTPUT
BCM (BODY CONTROL MODULE)
DOOR SW (DR)
DOOR SW (RL)
DOOR SW (AS)
DOOR SW (RR)
BACK DOOR SW
FRONT DOOR SWITCH LH
FRONT DOOR SWITCH RH
BACK DOOR LOCK ASSEMBLY (BACK DOOR SWITCH)
REAR DOOR SWITCH LH
REAR DOOR SWITCH RH
OPEN
CLOSED
WIWA2270E

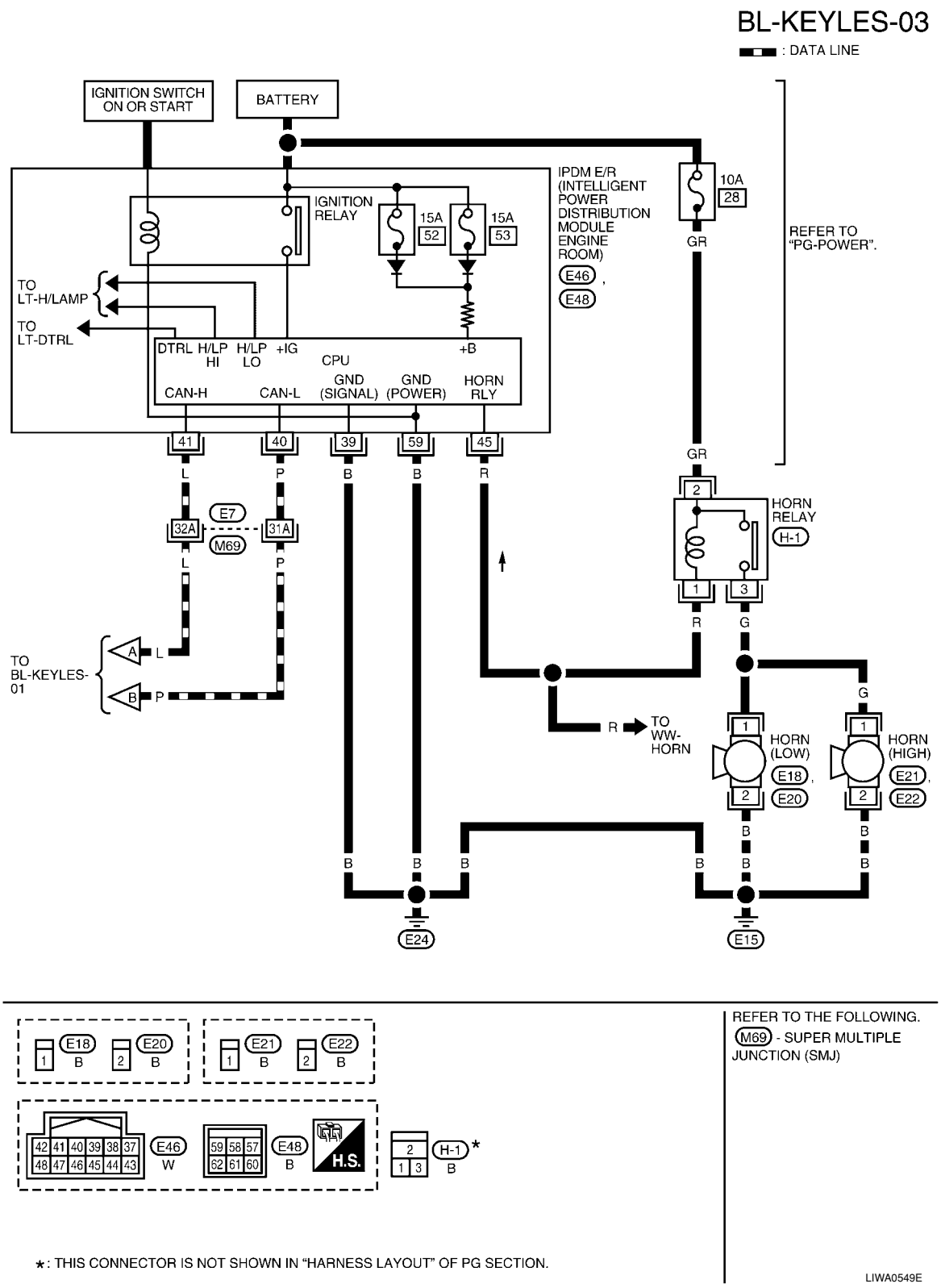

Terminal and Reference Value for BCM

INFOID:0000000001703978

Refer to BCS-11, "Terminal and Reference Value for BCM" .

How to Perform Trouble Diagnosis

INFOID:0000000001703979

1. Confirm the symptom or customer complaint.
2. Understand operation, description and function description. Refer to BL-51, "System Description" .

3. Perform the Preliminary Check. Refer to LT-11, "Preliminary Check" .
4. Check symptom and repair or replace the component.
5. Does the remote keyless entry system operate normally? If YES, GO TO 6. If NO, GO TO 4.
6. INSPECTION END

Preliminary Check

INFOID:0000000001703980

CHECK BCM CONFIGURATION

1.CHECK BCM CONFIGURATION

Confirm BCM configuration for "KEYLESS ENTRY" is set to "WITH". Refer to BCS-17, "Configuration" .

OK or NG

OK >> Refer to BL-59, "Work Flow" .
NG >> Change BCM configuration for "KEYLESS ENTRY" to "WITH". Refer to BCS-17, "Configuration" .

CONSULT-III Function (BCM)

INFOID:0000000001703981

CONSULT-III can display each diagnostic item using the diagnostic test modes shown following.

BCM diagnostic test item	Diagnostic mode	Description
Inspection by part	WORK SUPPORT	Supports inspections and adjustments. Commands are transmitted to the BCM for setting the status suitable for required operation, input/output signals are received from the BCM and received date is displayed.
	DATA MONITOR	Displays BCM input/output data in real time.
	ACTIVE TEST	Operation of electrical loads can be checked by sending drive signal to them.
	SELF-DIAG RESULTS	Displays BCM self-diagnosis results.
	CAN DIAG SUPPORT MNTR	The result of transmit/receive diagnosis of CAN communication can be read.
	ECU PART NUMBER	BCM part number can be read.
	CONFIGURATION	Performs BCM configuration read/write functions.

CONSULT-III APPLICATION ITEMS

Work Support

Test Item	Description
REMO CONT ID REGIST	Keyfob ID code can be registered.
REMO CONT ID ERASER	Keyfob ID code can be erased.
REMO CONT ID CONFIR	It can be checked whether keyfob ID code is registered or not in this mode.
PANIC ALRM SET	Panic alarm operation mode can be changed in this mode. The operation mode will be changed when “CURRENT SETTING” on CONSULT-III screen is touched.
HAZARD LAMP SET	Hazard reminder mode can be changed in this mode. The hazard reminder mode will be changed when “CURRENT SETTING” on CONSULT-III screen is touched.
AUTO LOCK SET	Auto locking function mode can be changed in this mode. The function mode will be changed when “CURRENT SETTING” on CONSULT-III screen is touched.
TRUNK OPEN	Keyless trunk open operation mode can be changed in this mode. The operation mode will be changed when “CURRENT SETTING” on CONSULT-III screen is touched.

PANIC ALARM SET

	MODE 1	MODE 2	MODE 3
Keyfob operation	0.5 seconds	Nothing	1.5 seconds

HAZARD LAMP BACK SET

	MODE 1	MODE 2	MODE 3	MODE 4
Hazard lamp operation mode	Nothing	Unlock only	Lock only	Lock and Unlock

AUTO LOCK SET

	MODE 1	MODE 2	MODE 3
Auto locking function	30 seconds	Nothing	1 minutes

TRUNK OPEN

	MODE 1	MODE 2	MODE 3
Keyfob operation	0.5 seconds	Nothing	1.5 seconds

Data Monitor

Monitored Item	Description
IGN ON SW	Indicates [ON/OFF] condition of ignition switch in ON position.
KEY ON SW	Indicates [ON/OFF] condition of key switch.
ACC ON SW	Indicates [ON/OFF] condition of ignition switch in ACC position.
KEYLESS LOCK	Indicates [ON/OFF] condition of lock signal from keyfob.
KEYLWSS UNLOCK	Indicates [ON/OFF] condition of unlock signal from keyfob.
KYLS TRNK/HAT	This is displayed even when it is not equipped.
KEYLESS PSD	This is displayed even when it is not equipped.
DOOR SW-DR	Indicates [ON/OFF] condition of front door switch driver side.
DOOR SW-AS	Indicates [ON/OFF] condition of front door switch passenger side.
DOOR SW-RR	Indicates [ON/OFF] condition of rear door switch RH.
DOOR SW-RL	Indicates [ON/OFF] condition of rear door switch LH.
BACK DOOR SW	Indicates [ON/OFF] condition of back door switch (hatchback).
TRNK/HAT MNTR	Indicates [ON/OFF] condition of trunk room lamp switch (sedan).
CDL LOCK SW	Indicates [ON/OFF] condition of lock signal from door lock and unlock switch.
CDL UNLOCK SW	Indicates [ON/OFF] condition of unlock signal from door lock and unlock switch.
KEYLESS PANIC	Indicates [ON/OFF] condition of panic alarm signal from keyfob.

Active Test

Test Item	Description
INT LAMP	This test is able to check interior room lamp operation. The interior room lamp turns on when “ON” on CONSULT-III screen is touched.
FLASHER	This test is able to check right hazard reminder operation. The right hazard lamp turns on when “ON” on CONSULT-III screen is touched.
DOOR LOCK	This test is able to check door lock actuator operation. • The all door lock actuator are locked when “ALL LOCK” on CONSULT-III screen is touched. • The all door lock actuator are unlocked when “ALL UNLOCK” on CONSULT-III screen is touched.
TRUNK/BACK DOOR	This is displayed even when it is not equipped.
POWER SLIDE DOOR	This is displayed even when it is not equipped.

Work Flow

INFOID:0000000001703982

1. Check the symptom and customer's requests.
2. Understand outline of system. Refer to BL-51, "System Description" .
3. Confirm that power door lock system operates normally.
   Refer to BL-22 .
4. Repair or replace any malfunctioning parts.
   Refer to BL-60, "Trouble Diagnosis Symptom Chart" .
5. Does remote keyless entry system operate normally? If Yes, GO TO 6. If No, GO TO 4.
6. INSPECTION END

Trouble Diagnosis Symptom Chart

INFOID:0000000001703983

NOTE:
- Always check the “Work Flow” before troubleshooting. Refer to BL-59, "Work Flow" .
- Always check keyfob battery before replacing keyfob.

Symptom	Diagnoses/service procedure	Reference page
All function of remote keyless entry system do not operate.	1. Check key switch.	BL-66
	2. Check keyfob battery and function. **NOTE:** If the result of keyfob function check with CONSULT-III is OK, keyfob is not malfunctioning.	BL-61
	3. Check remote keyless entry receiver.	BL-68
	4. Refer to ID Code Entry Procedure.	BL-71
	5. Replace BCM.	BCS-18
The new ID of keyfob cannot be entered.	1. Check keyfob battery and function. **NOTE:** If the result of keyfob function check with CONSULT-III is OK, keyfob is not malfunctioning.	BL-61
	2. Check key switch.	BL-66
	3. Check door switch (hatchback).	BL-62
	4. Check door switch (sedan).	BL-65
	5. Check ACC switch.	BL-62
	6. Replace keyfob. Refer to ID Code Entry Procedure.	BL-71
	7. Replace BCM.	BCS-18
Door lock does not function with keyfob. (Power door lock system is “OK”.)	1. Check keyfob function. (Lock) **NOTE:** If the result of keyfob function check with CONSULT-III is OK, keyfob is not malfunctioning.	BL-71
	2. Replace keyfob. Refer to ID Code Entry Procedure.	BL-71
	3. Check door switch (hatchback).	BL-62
	4. Check door switch (sedan).	BL-65
	5. Replace BCM.	BCS-18
Door unlock does not function with keyfob (Power door lock system is “OK”)	1. Check keyfob function. (Unlock)	BL-71
	2. Replace keyfob. Refer to ID Code Entry Procedure. **NOTE:** If the result of keyfob function check with CONSULT-III is OK, keyfob is not malfunctioning.	BL-71
	3. Replace BCM.	BCS-18
Hazard reminder does not activate properly when pressing lock or unlock button of keyfob.	1. Check hazard reminder mode.* *: Hazard reminder mode can be changed. First check the hazard reminder setting.	BL-58
	2. Check hazard function.	BL-67
	3. Replace BCM.	BCS-18

Symptom	Diagnoses/service procedure	Reference page
Panic alarm does not activate when panic alarm button is continuously pressed.	1. Check panic alarm mode.* *: Panic alarm mode can be changed. First check the panic alarm setting.	BL-58
	2. Check keyfob battery and function. **NOTE:** If the result of keyfob function check with CONSULT-III is OK, keyfob is not malfunctioning.	BL-61
	3. Check horn function.	BL-67
	4. Check key switch.	BL-66
	5. Replace keyfob. Refer to ID Code Entry Procedure.	BL-71
	6. Replace BCM.	BCS-18
Auto door lock operation does not activate properly. (All other remote keyless entry system functions are OK.)	1. Check auto door lock operation mode.* *: Auto door lock operation mode can be changed. First check the auto door lock operation setting.	BL-58
	2. Replace BCM.	BCS-18
Interior lamp operation does not activate properly.	1. Check interior lamp operation.	BL-68
	2. Replace BCM.	BCS-18

Keyfob Battery and Function Check

INFOID:0000000001703984

1. CHECK KEYFOB BATTERY

1. Remove keyfob battery. Refer to BL-73, "Keyfob Battery Replacement" .
2. Measure voltage between battery positive and negative terminals, (+) and (–).

Voltage : 2.5 – 3.0V

NOTE:
Keyfob does not function if battery is not set correctly.

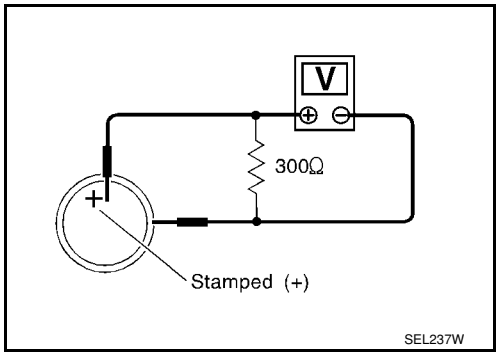

OK or NG

OK >> GO TO 2.
NG >> Replace battery.

2. CHECK KEYFOB FUNCTION

With CONSULT-III

Check keyfob function in “DATA MONITOR” mode with CONSULT-III. When pushing each button of keyfob, the corresponding monitor item should be turned as follows.

Condition	Monitor item	
Pushing LOCK	KEYLESS LOCK	: ON
Pushing UNLOCK	KEYLESS UNLOCK	: ON
Pushing PANIC	KEYLESS PANIC	: ON

Without CONSULT-III

Check keyfob function using Remote Keyless Entry Tester J-43241.

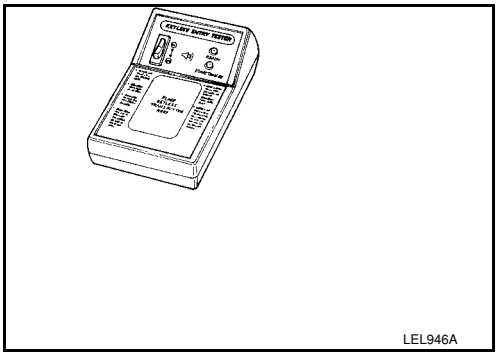

OK or NG

OK >> Keyfob is OK.
NG1 >> (Without CONSULT-III) Replace keyfob.
NG2 >> (With CONSULT-III) More testing is needed. Perform BL-68, "Remote Keyless Entry Receiver Check".

ACC Switch Check

INFOID:0000000001703985

1.CHECK ACC SWITCH

With CONSULT-III

Check ACC switch (“ACC ON SW”) in “DATA MONITOR” mode with CONSULT-III.

Monitor item	Condition	
ACC ON SW	Ignition switch position is ACC or ON	: ON
	Ignition switch position is OFF	: OFF

Without CONSULT-III

Check voltage between BCM connector and ground.

Terminals			Ignition switch condition	Voltage (V) (Approx.)
(+)		(–)		
BCM connector	Terminal			
M18	11	Ground	ACC or ON	Battery voltage
			OFF	0

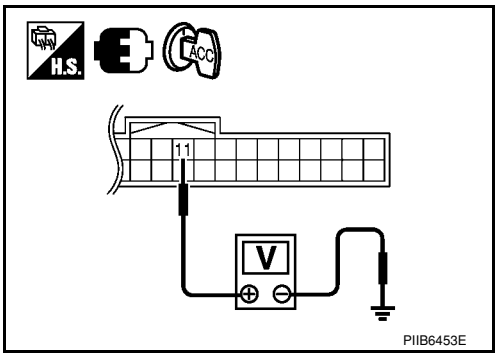

OK or NG

OK >> ACC switch is OK.
NG >> Check the following.
- 10A fuse [No. 20, located in fuse block (J/B)]
- Harness for open or short between BCM and fuse.

Door Switch Check (Hatchback)

INFOID:0000000001703986

1.CHECK DOOR SWITCHES INPUT SIGNAL

With CONSULT-III

Check door switches ("DOOR SW-DR", "DOOR SW-AS", "DOOR SW-RL", "DOOR SW-RR", "BACK DOOR SW") in DATA MONITOR mode with CONSULT–III. Refer to BL-36, "CONSULT-III Function (BCM)" .

- When doors are open:

DOOR SW-DR : ON
DOOR SW-AS : ON
DOOR SW-RL : ON
DOOR SW-RR : ON
BACK DOOR SW : ON

- When doors are closed:

DOOR SW-DR : OFF
DOOR SW-AS : OFF
DOOR SW-RL : OFF
DOOR SW-RR : OFF
BACK DOOR SW : OFF

Without CONSULT-III

Check voltage between BCM connector M18 or M19 terminals 12, 13, 43, 47, 48 and ground.

Connector	Item	Terminals (+)	Terminals (–)	Condition	Voltage (V) (Approx.)
M18	Front door switch RH	12	Ground	Open ↓ Closed	0 ↓ Battery voltage
	Rear door switch RH	13			
M19	Back door switch	43			
	Front door switch LH	47			
	Rear door switch LH	48			

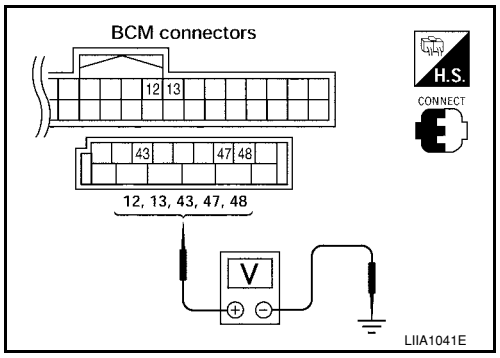

OK or NG

OK >> Door switch circuit is OK.
NG >> GO TO 2.

2. CHECK DOOR SWITCH CIRCUIT

1. Turn ignition switch OFF.
2. Disconnect door switch and BCM.
3. Check continuity between door switch connector (B) B8 (front LH), B108 (front RH) terminal 2 or (C) B6 (rear LH), B116 (rear RH) terminal 1 or back door lock assembly connector (D) D405 terminal 3 and BCM connectors (A) M18, M19 terminals 12, 13, 43, 47 and 48.

1 - 13	**: Continuity should exist.**
1 - 48	**: Continuity should exist.**
2 - 12	**: Continuity should exist.**
2 - 47	**: Continuity should exist.**
3 - 43	**: Continuity should exist.**

4. Check continuity between door switch connector (B) B8 (front LH), B108 (front RH) terminal 2 or (C) B6 (rear LH), B116 (rear RH) terminal 1 or back door lock assembly connector (D) D405 terminal 3 and ground.

1 - Ground	**: Continuity should not exist.**
2 - Ground	**: Continuity should not exist.**
3 - Ground	**: Continuity should not exist.**

OK or NG

OK >> GO TO 3.
NG >> Repair or replace harness.

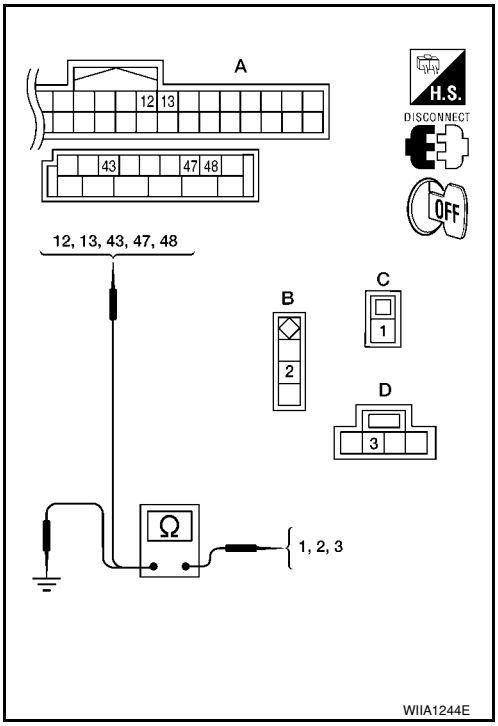

3. CHECK DOOR SWITCHES

FRONT AND REAR DOORS

Check continuity between front door switch terminal 2 or rear door switch terminal 1 and exposed metal of switch while pressing and releasing switch.

Door switch is released	**: Continuity should exist.**
Door switch is pushed	**: Continuity should not exist.**

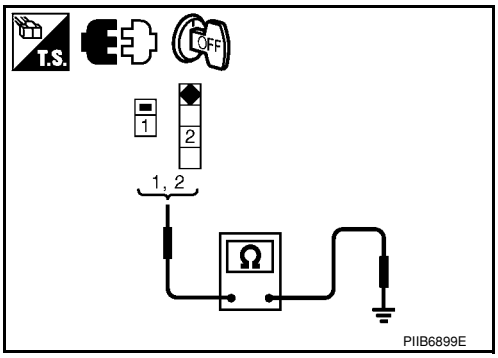

BACK DOOR

Check continuity between back door lock assembly connector (back door switch) terminals 3 and 4 while pressing (closing back door) and releasing (opening back door) switch.

When back door is open	**: Continuity should exist.**
When back door is closed	**: Continuity should not exist.**

OK or NG

OK >> (Front and rear doors) Switch circuit is OK.
OK >> (Back door) GO TO 4.
NG >> Replace door switch.

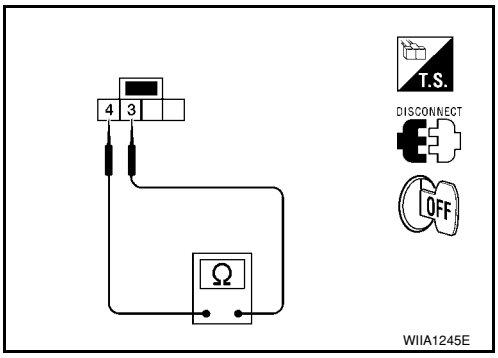

4. CHECK BACK DOOR SWITCH GROUND

Check continuity between back door lock assembly connector D405 terminal 4 and ground.

4 - Ground : Continuity should exist.

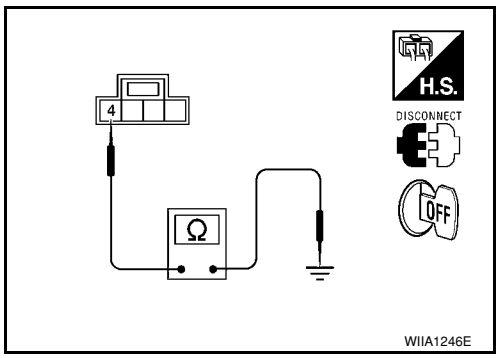

OK or NG

OK >> Back door switch circuit is OK.
NG >> Repair or replace harness.

Door Switch Check (Sedan)

INFOID:0000000001703987

1. CHECK DOOR SWITCHES INPUT SIGNAL

With CONSULT-III

Check door switches ("DOOR SW-DR", "DOOR SW-AS", "DOOR SW-RL", "DOOR SW-RR") in DATA MONITOR mode with CONSULT–III. Refer to BL-58, "CONSULT-III Function (BCM)".

- When doors are open:

DOOR SW-DR : ON
DOOR SW-AS : ON
DOOR SW-RL : ON
DOOR SW-RR : ON

- When doors are closed:

DOOR SW-DR : OFF
DOOR SW-AS : OFF
DOOR SW-RL : OFF
DOOR SW-RR : OFF

Without CONSULT-III

Check voltage between BCM connector M18 or M19 terminals 12, 13, 47, 48 and ground.

Connector	Item	Terminals (+)	Terminals (–)	Condition	Voltage (V) (Approx.)
M19	Front door switch LH	47	Ground	Open ↓ Closed	0 ↓ Battery voltage
	Rear door switch LH	48			
M18	Front door switch RH	12			
	Rear door switch RH	13			

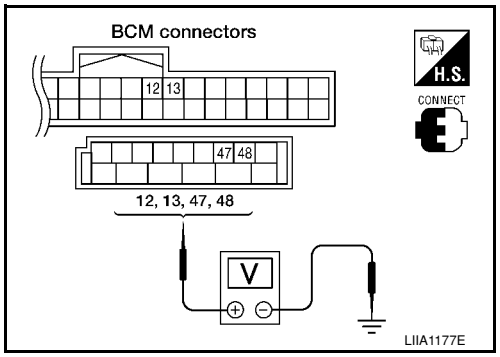

OK or NG

OK >> Door switch circuit is OK.
NG >> GO TO 2.

2. CHECK DOOR SWITCH CIRCUIT

1. Turn ignition switch OFF.
2. Disconnect door switch and BCM.
3. Check continuity between door switch connector B8 (Front LH) or B108 (Front RH) terminal 2, B6 (Rear LH) or B116 (Rear RH) terminal 1 and BCM connector M18, M19 terminals 12, 13, 47 and 48.

2 - 47 **: Continuity should exist.**
2 - 12 **: Continuity should exist.**
1 - 48 **: Continuity should exist.**
1 - 13 **: Continuity should exist.**

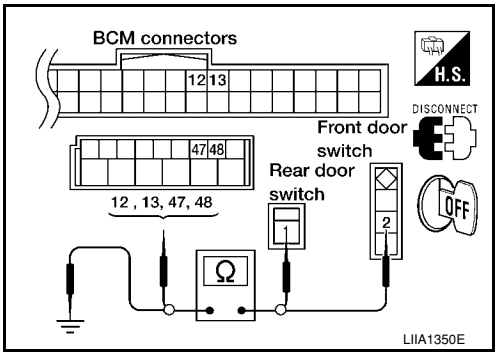

4. Check continuity between door switch connector B8 (Front LH) or B108 (Front RH) terminal 2, B6 (Rear LH) or B116 (Rear RH) terminal 1 and ground.

2 - Ground **: Continuity should not exist.**
1 - Ground **: Continuity should not exist.**

OK or NG

OK >> GO TO 3.
NG >> Repair or replace harness.

3.CHECK DOOR SWITCHES

Check continuity between door switch terminal and switch case ground.

Component	Terminals	Condition of switch	Continuity
Front door switch LH/RH	2 – Case ground	Pushed	No
		Released	Yes
Rear door switch LH/RH	1 – Case ground	Pushed	No
		Released	Yes

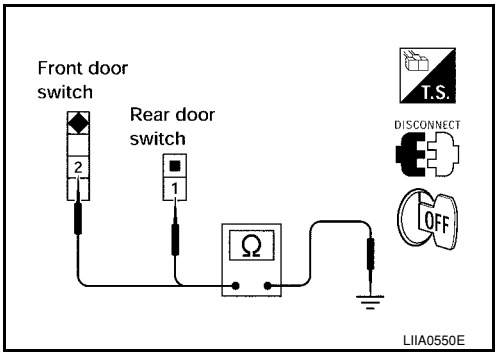

OK or NG

OK >> Check door switch case ground condition.
NG >> Replace door switch.

Key Switch (Insert) Check

INFOID:0000000001703988

1.CHECK KEY SWITCH INPUT SIGNAL

With CONSULT-III

Check key switch "KEY ON SW" in DATA MONITOR mode with CONSULT–III. Refer to BL-36, "CONSULT-III Function (BCM)" .

- When key is inserted into ignition key cylinder:

KEY ON SW **: ON**

- When key is removed from ignition key cylinder:

KEY ON SW **: OFF**

Without CONSULT-III

Check voltage between BCM connector and ground.

Connector	Terminals		Condition	Voltage (V) (Approx.)
	(+)	(–)		
M18	37	Ground	Key is inserted.	Battery voltage
			Key is removed.	0

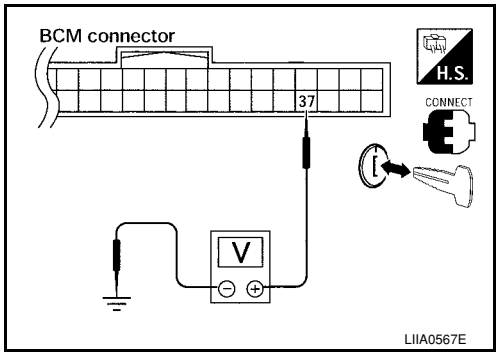

OK or NG

OK >> Key switch circuit is OK.
NG >> GO TO 2.

2. CHECK KEY SWITCH

1. Turn ignition switch OFF.
2. Disconnect key switch and key lock solenoid connector.
3. Check key switch.

Terminals	Condition	Continuity
1 – 2	Key is inserted.	Yes
	Key is removed.	No

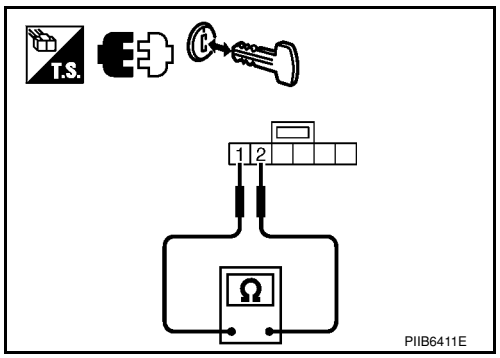

OK or NG

OK >> Check the following.
- 10A fuse [No. 14, located in fuse block (J/B)]
- Harness for open or short between key switch and fuse
- Harness for open or short between BCM and key switch

NG >> Replace key switch and key lock solenoid.

Hazard Function Check

INFOID:0000000001703989

1. CHECK HAZARD WARNING LAMP

Does hazard warning lamp flash with hazard switch?

OK or NG

OK >> Hazard warning lamp circuit is OK.
NG >> Check hazard circuit. Refer to LT-48 .

Horn Function Check

INFOID:0000000001703990

First perform the “SELF-DIAG RESULTS” in “BCM” with CONSULT-III, then perform the trouble diagnosis of malfunction system indicated “SELF-DIAG RESULTS” of “BCM”. Refer to BCS-17, "CAN Communication Inspection Using CONSULT-III (Self-Diagnosis)" .

1. CHECK HORN FUNCTION

Does horn sound with horn switch?

OK or NG

OK >> GO TO 2.
NG >> Check horn circuit. Refer to WW-37 .

2. CHECK IPDM E/R INPUT SIGNAL

Check voltage between IPDM E/R connector and ground.

Terminals			Voltage (V) (Approx.)
(+)		(–)	
IPDM E/R connector	Terminal		
E46	45	Ground	Battery voltage

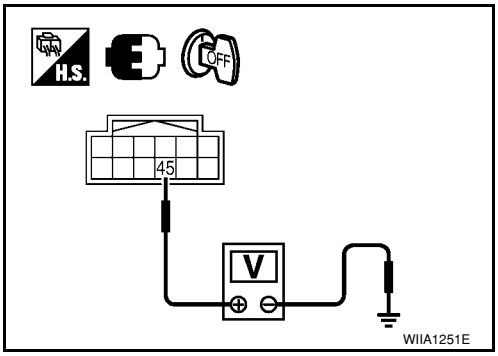

OK or NG

OK >> Replace IPDM E/R. Refer to PG-26, "Removal and Installation of IPDM E/R"

NG >> GO TO 3.

3. CHECK HORN RELAY CIRCUIT

1. Turn ignition switch OFF.
2. Disconnect IPDM E/R and horn relay connector.
3. Check continuity between IPDM E/R harness connector and horn relay harness connector.

A		B		Continuity
IPDM E/R connector	Terminal	Horn relay connector	Terminal	
E46	45	H-1	1	Yes

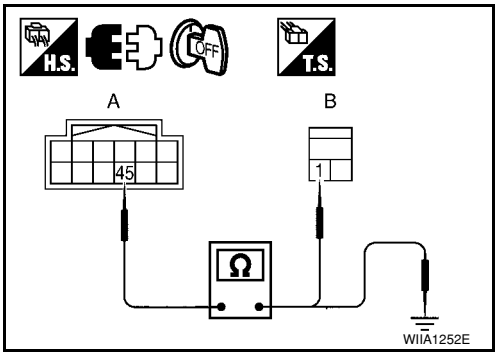

4. Check continuity between IPDM E/R harness connector and ground.

A		Ground	Continuity
IPDM E/R connector	Terminal		
E46	45		No

OK or NG

OK >> Check condition of harness and connector.

NG >> Repair or replace harness.

Interior Lamp and Ignition Keyhole Illumination Function Check

INFOID:0000000001703991

1. CHECK INTERIOR LAMP AND IGNITION KEYHOLE ILLUMINATION FUNCTION

When map lamp switch is in “DOOR” position, open the front door (LH or RH).

Does interior lamp illuminate?

YES >> Replace BCM. Refer to BCS-18, "Removal and Installation of BCM" .

NO >> Check interior lamp circuit. Refer to LT-89 .

Remote Keyless Entry Receiver Check

INFOID:0000000001703992

1. CHECK REMOTE KEYLESS ENTRY RECEIVER OUTPUT SIGNAL

1. Turn ignition switch OFF.
2. Check remote keyless entry receiver connector and ground signal with oscilloscope.

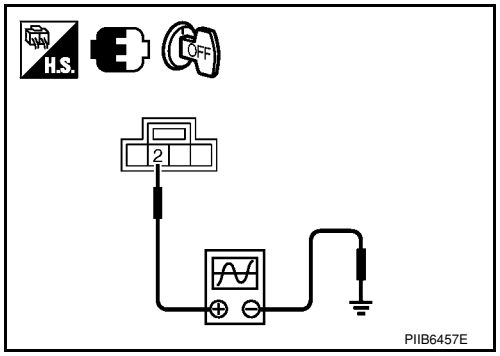

Terminals (+) Remote keyless entry receiver connector	Terminals (+) Terminal	Terminals (–)	Keyfob condition	Signal (Reference value)
M23	2	Ground	No function	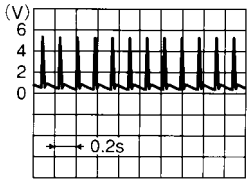
			Any button is pressed	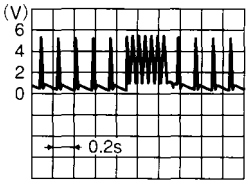

OK or NG

OK >> Remote keyless entry receiver circuit is OK.
NG >> GO TO 2.

2. CHECK REMOTE KEYLESS ENTRY RECEIVER INPUT VOLTAGE

1. Disconnect remote keyless entry receiver connector.
2. Check voltage between remote keyless entry receiver connector M23 terminal 4 and ground.

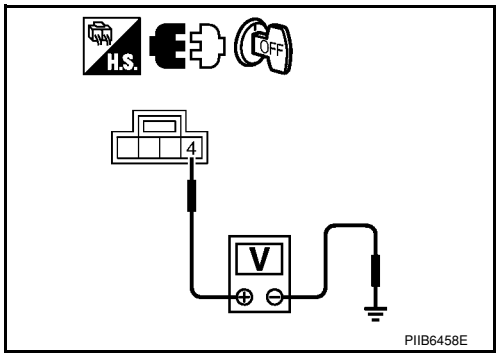

Terminals (+) Remote keyless entry receiver connector	Terminals (+) Terminal	Terminals (–)	Voltage (V) (Approx.)
M23	4	Ground	4.5

OK or NG

OK >> GO TO 4.
NG >> GO TO 3.

3. CHECK REMOTE KEYLESS ENTRY RECEIVER POWER SUPPLY CIRCUIT

1. Disconnect BCM connector.
2. Check continuity between BCM connector (A) M18 terminal 19 and remote keyless entry receiver connector (B) M23 terminal 4.

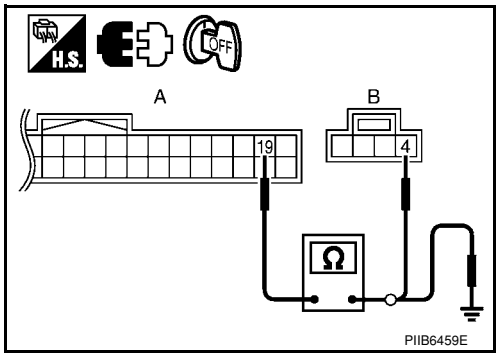

A BCM connector	A Terminal	B Remote keyless entry receiver connector	B Terminal	Continuity
M18	19	M23	4	Yes

3. Check continuity between BCM connector (A) M18 terminal 19 and ground.

A		Ground	Continuity
BCM connector	Terminal		
M18	19		No

OK or NG

OK >> Replace BCM. Refer to BCS-18, "Removal and Installation of BCM" .
NG >> Repair or replace the harness.

4. CHECK REMOTE KEYLESS ENTRY RECEIVER GROUND CIRCUIT

Check continuity between remote keyless entry receiver connector M23 terminal 1 and ground.

Remote keyless entry receiver connector	Terminal	Ground	Continuity
M23	1		Yes

OK or NG

OK >> GO TO 6.
NG >> GO TO 5.

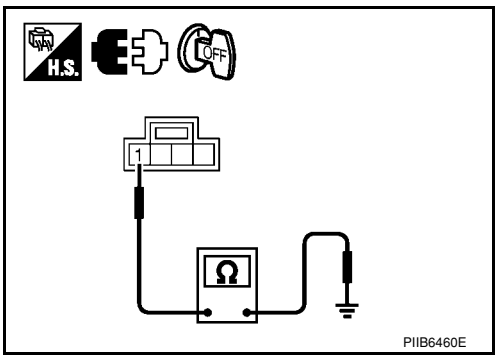

5. CHECK REMOTE KEYLESS ENTRY RECEIVER GROUND CIRCUIT

Check continuity between BCM connector (A) M18 terminal 18 and remote keyless entry receiver connector (B) M23 terminal 1.

A		B		Continuity
BCM connector	Terminal	Remote keyless entry receiver connector	Terminal	
M18	18	M23	1	Yes

OK or NG

OK >> Replace BCM. Refer to BCS-18, "Removal and Installation of BCM" .
NG >> Repair or replace the harness.

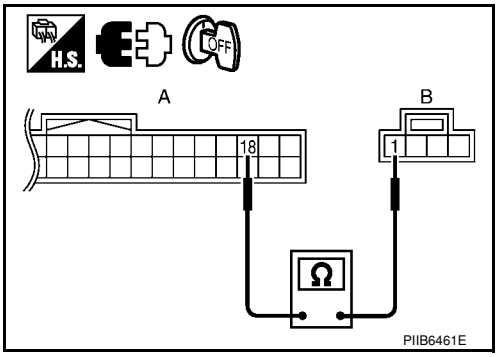

6. CHECK REMOTE KEYLESS ENTRY RECEIVER SIGNAL CIRCUIT

1. Check continuity between BCM connector (A) M18 terminal 20 and remote keyless entry receiver connector (B) M23 terminal 2.

A		B		Continuity
BCM connector	Terminal	Remote keyless entry receiver connector	Terminal	
M18	20	M23	2	Yes

2. Check continuity between BCM connector (A) M18 terminal 20 and ground.

A		Ground	Continuity
BCM connector	Terminal		
M18	20		No

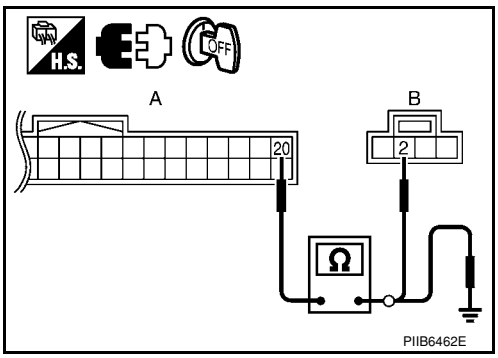

OK or NG

OK >> Replace remote keyless entry receiver. Refer to BL-73, "Removal and Installation of Remote Keyless Entry Receiver" .

NG >> Repair or replace harness.

Keyfob Function (Lock) Check

INFOID:0000000001703993

1. CHECK KEYFOB FUNCTION

With CONSULT-III

Check keyfob function in “DATA MONITOR” mode with CONSULT-III. When pushing lock button of keyfob, the corresponding monitor item should be turned as follows.

Test item	Condition
KEYLESS LOCK	Pushing LOCK button: ON
	Other than above: OFF

OK or NG

OK >> Keyfob is OK.
NG >> Replace keyfob.

Keyfob Function (Unlock) Check

INFOID:0000000001703994

1. CHECK KEYFOB FUNCTION

With CONSULT-III

Check keyfob function in “DATA MONITOR” mode with CONSULT-III. When pushing unlock button of keyfob, the corresponding monitor item should be turned as follows.

Test item	Condition
KEYLESS UNLOCK	Pushing UNLOCK button: ON
	Other than above: OFF

OK or NG

OK >> Keyfob is OK.
NG >> Replace keyfob.

ID Code Entry Procedure

INFOID:0000000001703995

KEYFOB ID SET UP WITH CONSULT-III

NOTE:

- **If a keyfob is lost, the ID code of the lost keyfob must be erased to prevent unauthorized use. A specific ID code can be erased with CONSULT-III. However, when the ID code of a lost keyfob is not known, all controller ID codes should be erased. After all ID codes are erased, the ID codes of all remaining and/or new keyfobs must be re-registered.**
- **When registering an additional keyfob, the existing ID codes in memory may or may not be erased. If five ID codes are stored in memory, when an additional code is registered, only the oldest code is erased. If less than five ID codes are stored in memory, when an additional ID code is registered, the new ID code is added and no ID codes are erased.**
- **Entry of maximum five ID codes is allowed. When more than five ID codes are entered, the oldest ID code will be erased.**
- **Even if same ID code that is already in the memory is input, the same ID code can be entered. The code is counted as an additional code.**

1. Touch “MULTI REMOTE ENT”.
2. Touch “WORK SUPPORT”.
3. The items are shown on the figure can be set up.
   - “REMO CONT ID CONFIR”
     Use this mode to confirm if a keyfob ID code is registered or not.
   - “REMO CONT ID REGIST”
     Use this mode to register a keyfob ID code.
     NOTE:

Register the ID code when keyfob or BCM is replaced, or when additional keyfob is required.

- "REMO CONT ID ERASUR"
  Use this mode to erase a keyfob ID code.

KEYFOB ID SET UP WITHOUT CONSULT-III

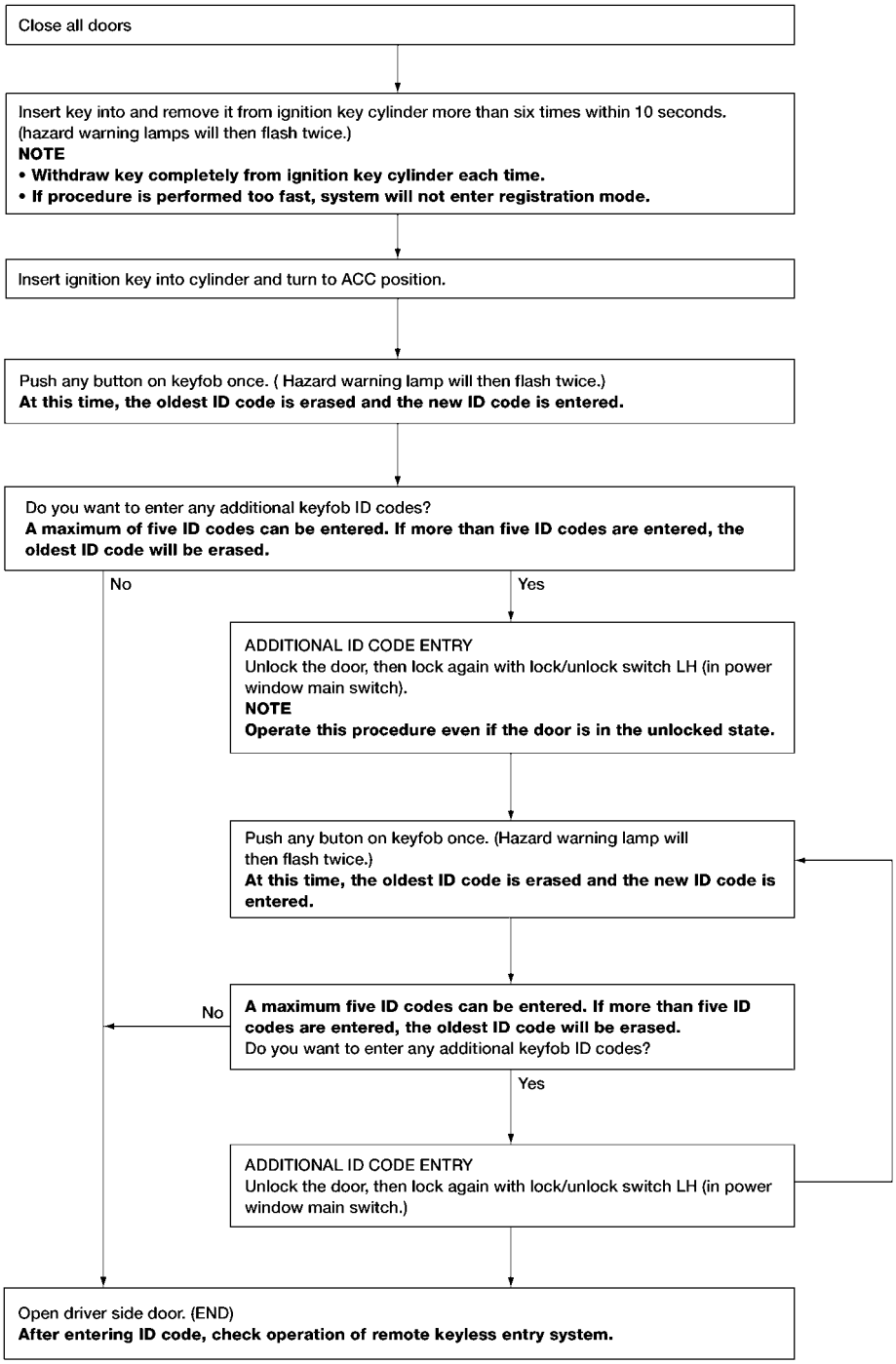

LIIA1513E

NOTE:

- If a keyfob is lost, the ID code of the lost keyfob must be erased to prevent unauthorized use. A specific ID code can be erased with CONSULT-III. However, when the ID code of a lost keyfob is not known, all controller ID codes should be erased. After all ID codes are erased, the ID codes of all remaining and/or new keyfobs must be re-registered.

To erase all ID codes in memory, register one ID code (keyfob) five times. After all ID codes are erased, the ID codes of all remaining and/or new keyfobs must be re-registered.

- When registering an additional keyfob, the existing ID codes in memory may or may not be erased. If five ID codes are stored in memory, when an additional code is registered, only the oldest code is erased. If less than five ID codes are stored in memory, when an additional ID code is registered, the new ID code is added and no ID codes are erased.
- If you need to activate more than two additional new keyfobs, repeat the procedure “Additional ID code entry” for each new keyfob.
- Entry of maximum five ID codes is allowed. When more than five ID codes are entered, the oldest ID code will be erased.
- Even if same ID code that is already in the memory is input, the same ID code can be entered. The code is counted as an additional code.

Keyfob Battery Replacement

INFOID:0000000001703996

SEC. 998
NOTE:
- Be careful not to touch the circuit board or battery terminal.
- The keyfob is water-resistant. However, if it does get wet, immediately wipe it dry.

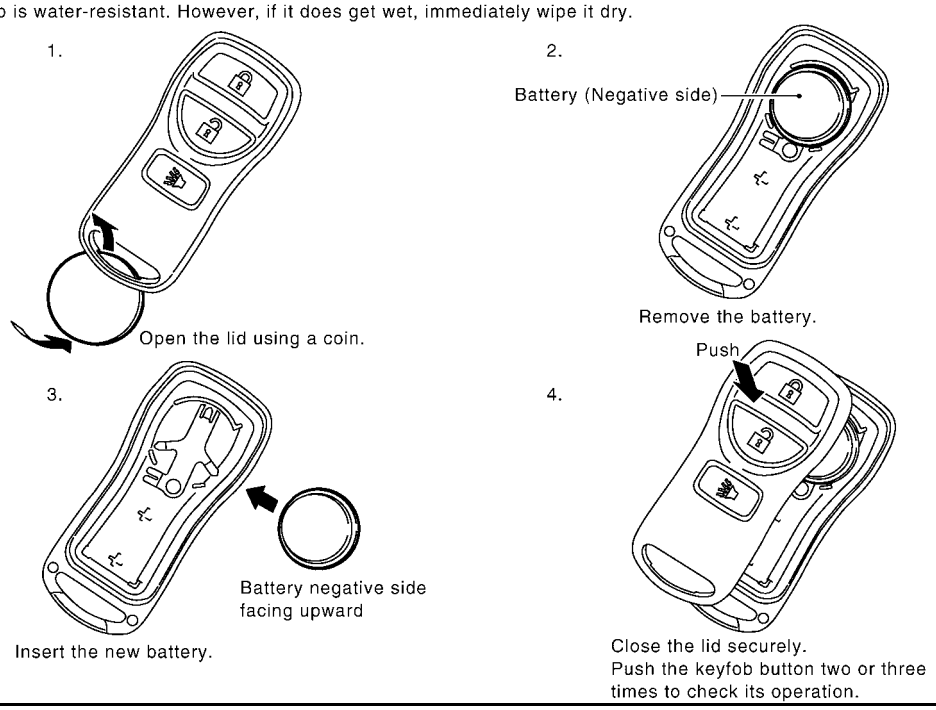

Removal and Installation of Remote Keyless Entry Receiver

INFOID:0000000001703997

REMOVAL

1. Remove glove box assembly. Refer to IP-11, "Removal and Installation" .
2. Disconnect remote keyless entry receiver connector, remove screw and remote keyless entry receiver.

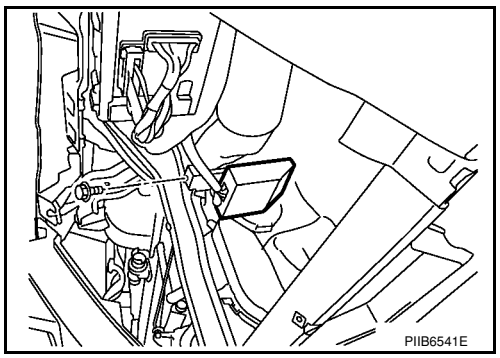

INSTALLATION

Installation is in the reverse order of removal.

INTELLIGENT KEY SYSTEM

Component Parts and Harness Connector Location

INFOID:0000000001703998

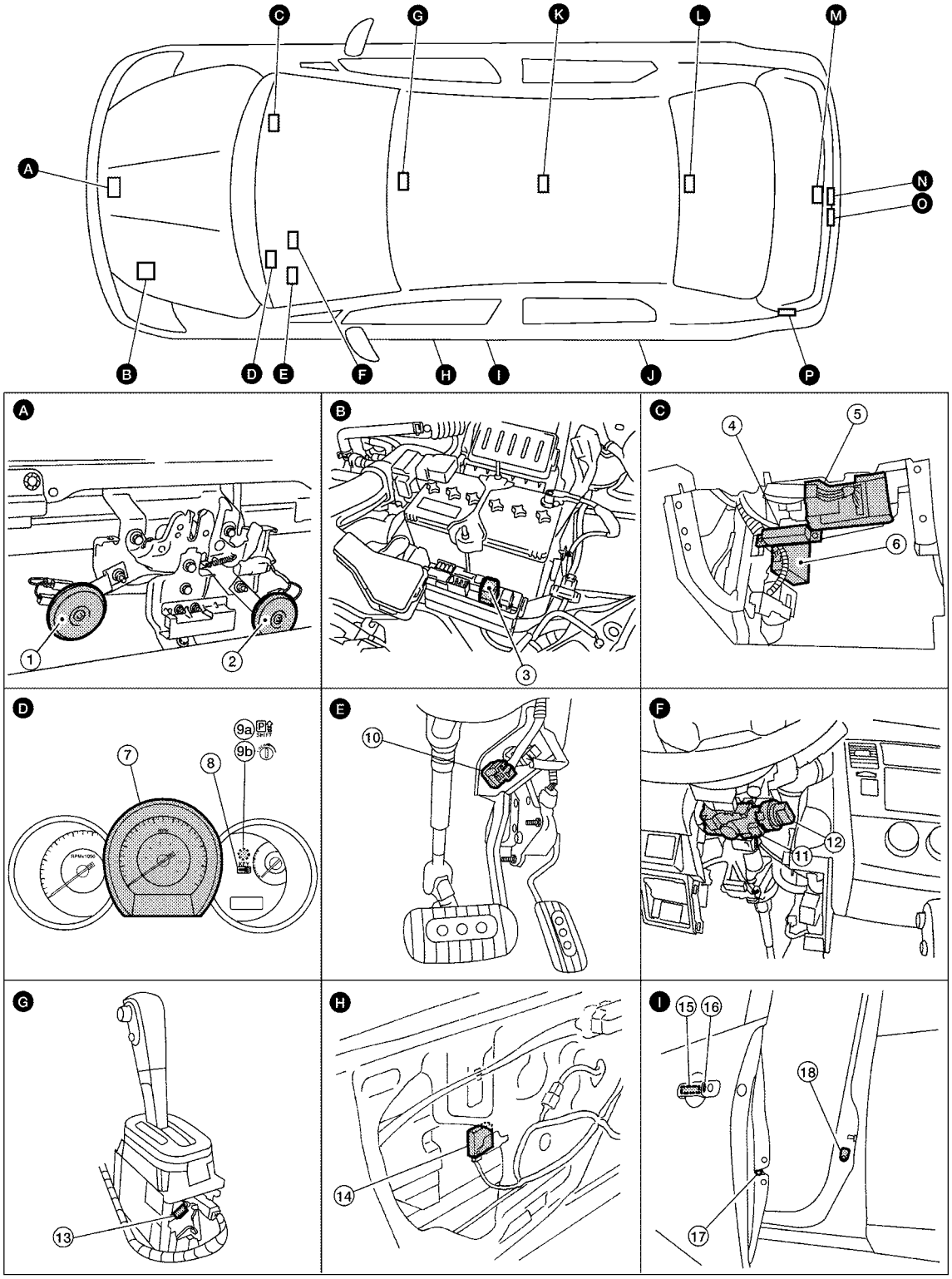

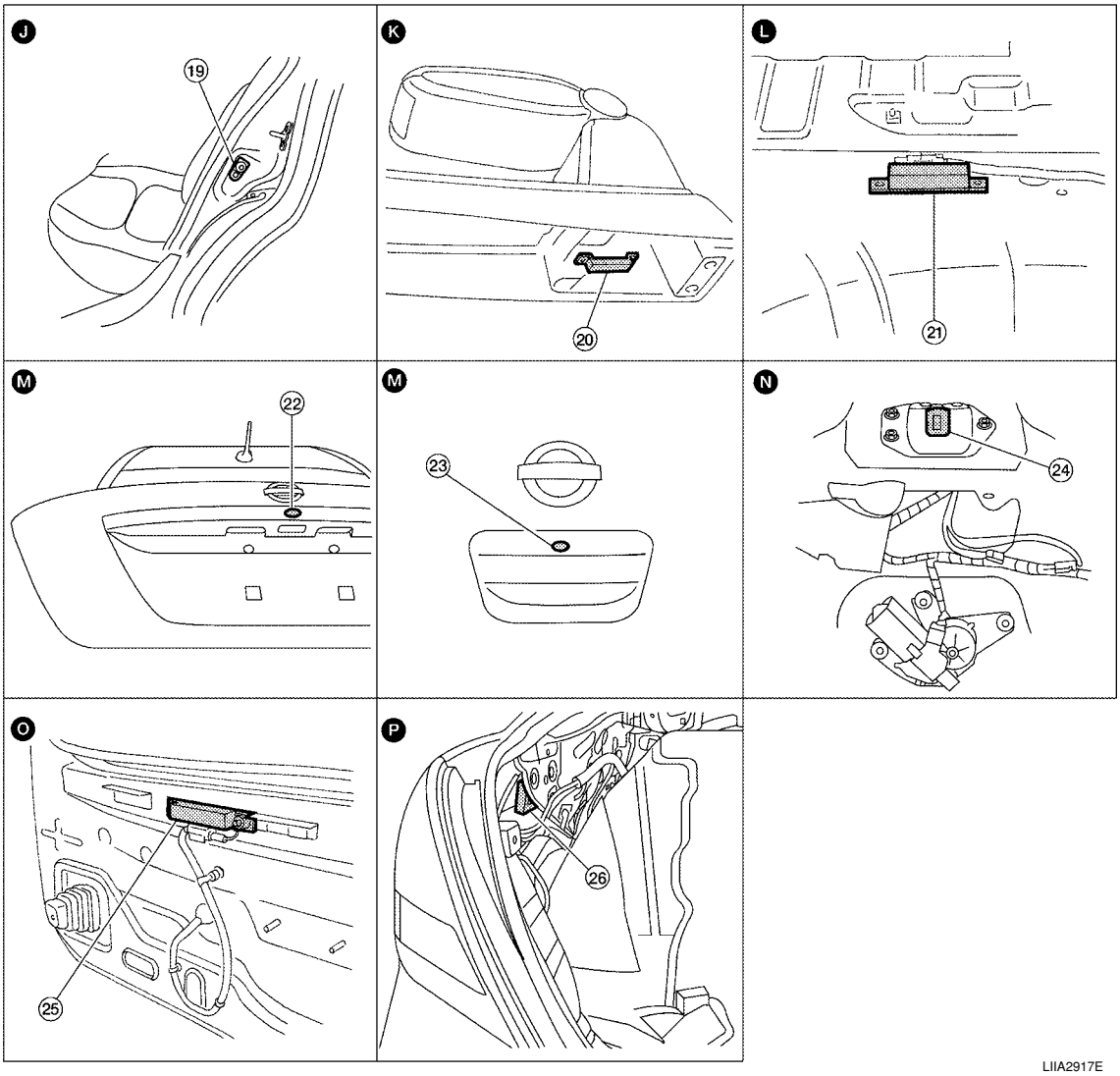

1. Horn (Low) E18, E20 (view with front fascia removed)
2. Horn (High) E21, E22
3. Horn relay H-1
4. Instrument panel antenna M10 (view with glove box removed)
5. BCM M18, M19, M20
6. Intelligent Key Unit M52
7. Combination meter M24
8. Intelligent key "KEY" warning indicator
9a. Intelligent key warning indicator (CVT)
9b. Intelligent key warning indicator (M/T)
10. Stop lamp switch E13
11. Steering lock solenoid M6 (bottom view of steering column)
12. Key switch and ignition knob switch M73
13. CVT device (park position switch) M38
14. Intelligent key warning buzzer (front door LH) D6 (view with front door finisher LH removed)
15. Front outside antenna LH D10, RH D106
16. Front door request switch LH D5, RH D103
17. Front door lock actuator LH (door unlock sensor) D3
18. Front door switch LH B8, RH B108
19. Rear door switch LH B6, RH B116
20. Front console antenna B3 (view with front console removed)
21. Rear floor antenna B12 (behind rear seat)
22. Trunk opener request switch B129 (sedan)
23. Back door request switch D406 (hatchback)
24. Back door lock assembly (back door switch) D405 (hatchback view with back door open)
25. Rear bumper antenna B2 (view with rear fascia removed)
26. Intelligent Key warning buzzer (trunk) B32 (sedan)

System Description

INFOID:0000000001703999

- The Intelligent Key system is a system that makes it possible to lock and unlock the door locks (door lock/unlock function), and start the engine (engine start function) by carrying around the Intelligent Key (without some key operation), which operates based on the results of electronic ID verification using two-way communications between the Intelligent Key and the vehicle (Intelligent Key unit).
- Vehicles equipped with a manual transmission include a key interlock solenoid located in the steering column to prevent accidental shut-off of the ignition switch and locking of the steering wheel during driving condition when the vehicle is moving.

  CAUTION:
  The driver should always carry the Intelligent Key
- Operation of the remote controller buttons on the Intelligent Key also provides the same functions as the remote control entry system. (Remote keyless entry functions)
- If an action that does not meet the operating conditions of the Intelligent Key system is taken, the buzzer goes off to inform the driver. (Warning chime functions)
- When a door lock is locked or unlocked with request switch or remote controller button operation, the hazard lamps flash and the buzzer (outside vehicle) sounds (Hazard and buzzer reminder function).
- Even if the Intelligent Key battery is completely discharged, the door locks can be locked and unlocked and the engine started with the mechanical key built into the Intelligent Key.
- The settings for each function can be changed with the CONSULT-III.
- If an Intelligent Key is lost, a new Intelligent Key can be registered. A maximum of 4 Intelligent Keys can be registered.
- It has been made possible to diagnose the system and register an Intelligent Key with the CONSULT-III.

DOOR LOCK/UNLOCK FUNCTION

Only when pressing the request switch, it is possible to lock and unlock the door by carrying around the Intelligent Key (without some key operation).

System Diagram

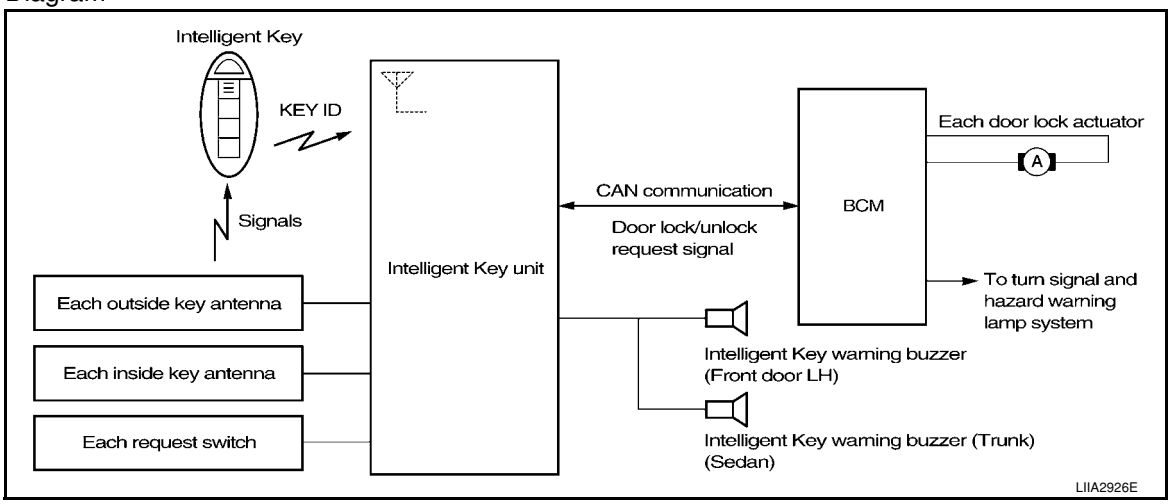

Operation Description

- When the Intelligent Key unit detects that each request switch is pressed, it starts the outside key antenna and inside key antenna corresponding to the pressed request switch and sends the request signal to the Intelligent Key. And then, make sure that the Intelligent Key is near door.
- If the Intelligent Key is within the outside key antenna detection area, it receives the request signal and sends the key ID signal to the Intelligent Key unit.
- Intelligent Key unit receives the key ID signal and compares it with the registered key ID.
- If the key ID check result is OK, the Intelligent Key unit sends the door lock/unlock request signal to BCM (Body control module) via CAN communication line.
- Intelligent Key unit sends the door lock/unlock signal and sounds Intelligent Key warning buzzer (lock: 2 times, unlock: 1 time) at the same time.
- When BCM receives the door lock/unlock signal, it operates door lock actuator and flashes the hazard warning lamp (lock: 2 times, unlock: 1 time) at the same time as reminder.

Operation Condition

If the following conditions are not satisfied, door lock/unlock operations are not performed even if the request switch is operated.

Each request switch operation	Operation condition	Operation
Lock operation	• All doors and trunk (sedan) are closed • Intelligent Key is outside of the vehicle • Intelligent Key is within outside key antenna detection area	All doors lock
Unlock Operation	• All doors and trunk (sedan) are closed • Intelligent Key is outside of the vehicle • Intelligent Key is within outside key antenna detection area*	All doors unlock

*: Even with a registered Intelligent Key remaining inside the vehicle, door locks can be unlocked from outside of the vehicle with a spare Intelligent Key as long as Key IDs are different.

Outside Key Antenna Detection Area

The outside key antenna detection area of door lock/unlock function is in the range of approximately 80 cm (31.50 in) surrounding the request switch (driver side, passenger side and back door or trunk area).

Hazard and Buzzer Reminder

When all doors and trunk (sedan) are locked or unlocked by each request switch, Intelligent Key unit sends hazard request signal to BCM via CAN communication line.

BCM flashes hazard warning lamps as a reminder and Intelligent Key unit sounds Intelligent Key warning buzzer(s) as a reminder.

Operating function of hazard and buzzer reminder

Request switch operation	Hazard warning lamp flash	Intelligent Key warning buzzer (front door LH) Intelligent Key warning buzzer (trunk)*
Unlock	Once	Once
Lock	Twice	Twice

* : Sedan only

Auto Door Lock Function

When all doors and trunk (sedan) are locked, ignition knob switch is OFF (when ignition switch is not pressed) and key switch is OFF (when mechanical key is out of ignition key cylinder), all doors are unlocked with each request switch.

When Intelligent Key unit does not receive the following signals within 1 minute, all doors are locked.

- Door switch is ON (door is opened)
- Trunk lamp switch (sedan) is ON (trunk is opened)
- Door lock signal from Intelligent Key button
- Ignition knob switch is ON (ignition switch is pressed)
- Key switch is ON (mechanical key is inserted in ignition key cylinder)

Auto door lock mode can be changed by “AUTO RELOCK TIMER” mode in “WORK SUPPORT”. Refer to BL-101, "CONSULT-III Application Item".

List of Operation Related Parts

Parts marked with × are the parts related to operation.

Door lock open function	Intelligent Key	Key switch	Ignition knob switch	Door switch	Back door lock assembly (back door switch)*	Request switch (driver, passenger, back)	Door lock actuator	Inside key antenna	Outside key antenna	Intelligent Key warning buzzer (front door LH)	Intelligent Key warning buzzer (trunk)**	Intelligent Key unit	CAN communication system	BCM	Hazard warning lamp
Door lock/unlock function by request switch	×			×	×	×	×	×	×			×	×	×	
Door lock/unlock function by mechanical key							×							×	
Hazard and buzzer reminder function										×	×	×	×	×	×
Auto door lock function		×	×	×	×		×					×	×	×	

* : Hatchback
** : Sedan

KEY REMINDER FUNCTION

Key reminder functions have the following 2 functions.

Key reminder function	Operation condition	Operation
Door is open to close	Right after all doors are closed under the following conditions. • Intelligent Key is inside the vehicle • Any door is opened • All doors are locked by door lock and unlock switch or door lock knob	• All doors unlock operation • Sound Intelligent Key warning buzzer for 3 seconds

CAUTION:

- **The above function operates when the Intelligent Key is inside the vehicle. However, there may be times when the Intelligent Key cannot be detected, and this function will not operate when the Intelligent Key is on the instrument panel, rear parcel shelf or in the glove box. Also, this system sometimes does not operate if the Intelligent Key is in the door pocket of an open door.**

List of Operation Related Parts
Parts marked with × are the parts related to operation

Key reminder functions	Intelligent Key	Door switch	Unlock sensor	Door lock actuator	Inside key antenna	Intelligent Key warning buzzer(s)	Intelligent Key unit	CAN communication system	BCM
Any door open to close	×	×	×	×	×	×	×	×	×

REMOTE KEYLESS ENTRY FUNCTIONS

The Intelligent Key has the same functions as the remote keyless entry system. Therefore, it can be used in the same manner as the keyfob by operating the door lock/unlock button.

System Diagram

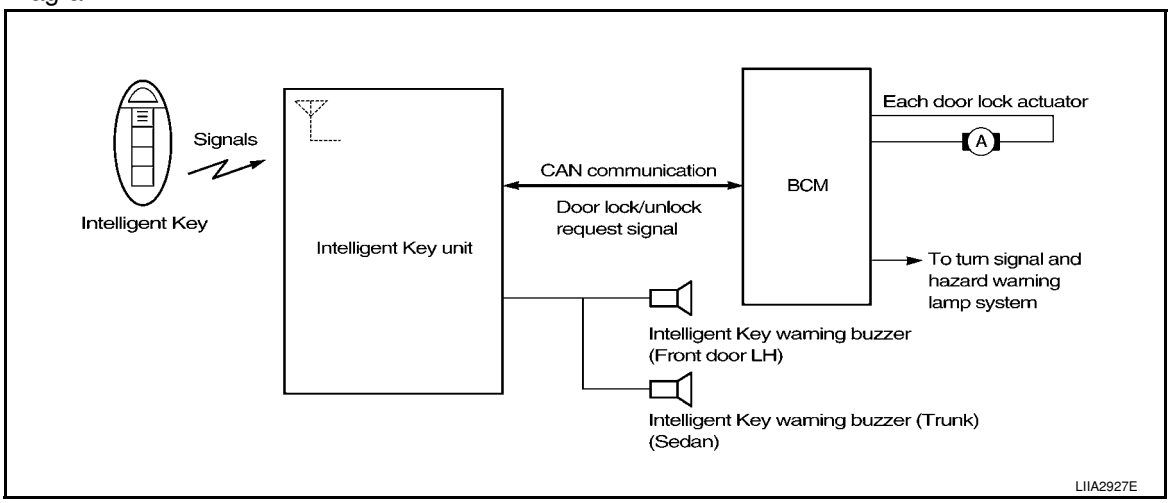

Door Lock/Unlock Function

- When door lock/unlock button of the Intelligent Key is pressed, lock signal or unlock signal is sent from Intelligent Key to Intelligent Key unit.
- Intelligent Key unit sends the door lock/unlock request signal to BCM via CAN communication line.
- Intelligent Key unit sends the door lock/unlock signal and sounds Intelligent Key warning buzzer(s) (lock: 2 times, unlock: 1 time) at the same time.
- When BCM receives the door lock/unlock signal, it operates door lock actuator and flashes the hazard warning lamp (lock: 2 times, unlock: 1 time) at the same time as reminder.

Operation Condition

Remote controller operation	Operation condition	Operation
Lock	All doors are closed	All doors lock

Hazard and Buzzer Reminder

When all doors are locked or unlocked by Intelligent Key button, Intelligent Key unit sends hazard request signal to BCM via CAN communication line.

BCM flashes hazard warning lamps as a reminder and Intelligent Key unit sounds Intelligent Key warning buzzer as a reminder.

Operating function of hazard and buzzer reminder

Intelligent Key button operation	Hazard warning lamp flash	Intelligent Key warning buzzer(s)	Horns (High and low)
Lock	Twice	—	Once
Unlock	Once	—	—

Auto Door Lock Function

When all doors are locked, ignition knob switch is OFF (when ignition switch is not pressed) and key switch is OFF (when mechanical key is out of ignition key cylinder), doors are unlocked with Intelligent Key button. When Intelligent Key unit does not receive the following signals within 1 minute, all doors are locked.

- Door switch is ON (door is opened)
- Trunk lamp switch (sedan) is ON (trunk is opened)
- Door is locked
- Ignition knob switch is ON (ignition switch is pressed)
- Key switch is ON (mechanical key is inserted in ignition switch)

Auto door lock mode can be changed by “AUTO RELOCK TIMER” mode in “WORK SUPPORT”. Refer to BL-101, "CONSULT-III Application Item".

Panic Alarm Function

When ignition knob switch is OFF (ignition switch is not pressed), or key switch is OFF (mechanical key is not inserted in key cylinder), pressing and holding the panic alarm button on Intelligent Key will send a panic alarm signal to Intelligent Key unit.

Intelligent Key unit sends alarm request signal to BCM via CAN communication line.

BCM sends headlamp request signal and horn signal to IPDM E/R. Then, IPDM E/R turns on and off headlamp and horn intermittently.
The headlamp flashes and the horn sounds intermittently.
The alarm automatically turns off:
- After 25 seconds
- When Intelligent Key unit receives any signal from remote controller of Intelligent Key
- When door request switch is pressed (Intelligent Key is outside vehicle)

Panic alarm function's press and holding time value can be changed in “PANIC ALARM DELAY” mode in “WORK SUPPORT”. Refer to BL-101, "CONSULT-III Application Item".

List of Operation Related Parts
Parts marked with × are the parts related to operation.

Remote keyless entry functions	Intelligent Key	Key switch	Ignition knob switch	Door request switch	Door switch	Back door lock assembly (back door switch)	Door lock actuator	Intelligent Key warning buzzer	Intelligent Key unit	CAN communication system	BCM	Hazard warning lamp	Horn	IPDM E/R	Head lamp
Door lock/unlock function by Intelligent Key button	×				×	×	×		×	×	×				
Hazard and buzzer reminder function								×	×	×	×	×			
Auto door lock function		×	×		×	×	×		×	×	×				
Panic alarm function	×	×	×	×					×	×	×		×	×	×

ENGINE START FUNCTION

When the registered Intelligent Key is carried, the engine can be started without inserting the key.

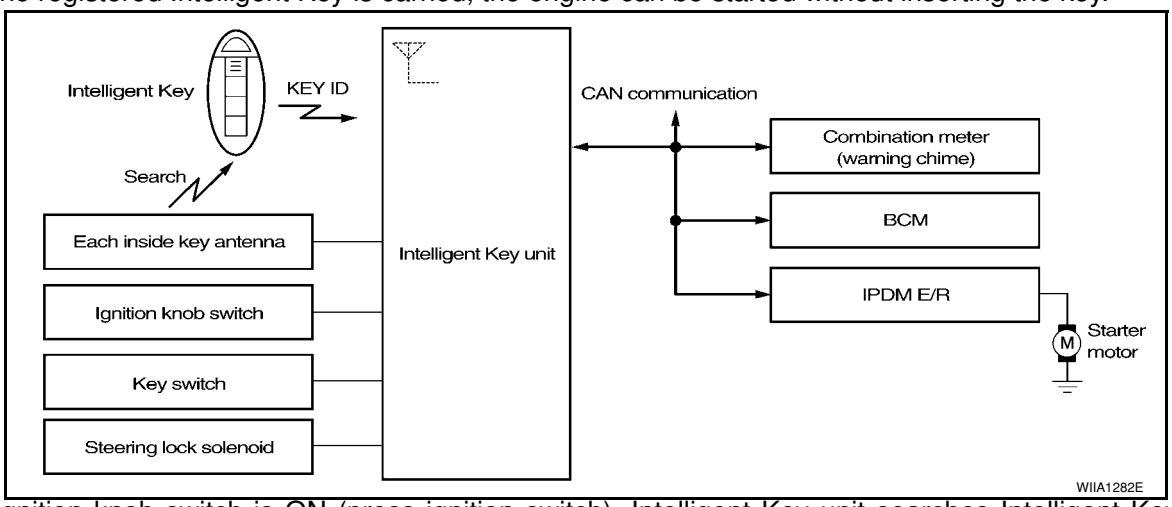

When ignition knob switch is ON (press ignition switch), Intelligent Key unit searches Intelligent Key in the vehicle using inside key antenna.
Then Intelligent Key is inside the vehicle, it performs the following operation.
- Illuminate green “KEY” warning lamp in combination meter.
- Released steering lock and ignition switch can be turned from OFF to ACC, ON or START position.
  NOTE:
  If Intelligent Key is not registered, “KEY” warning lamp in combination meter illuminates red.
- Intelligent Key sends engine start signal to BCM via CAN communication line.

When ignition switch turns to START position, BCM sends starter request signal to IPDM E/R. Then, engine starts.
Even if Intelligent Key battery runs down, Intelligent key unit can start engine with mechanical key built Intelligent Key. For details, refer toBL-210.
All of the originally supplied Intelligent Key IDs (except for key) have been registered in Intelligent Key system. If requested by the vehicle owner, a maximum of four Intelligent Key IDs can be registered into the Intelligent Key system components.

List of Operation Related Parts
Parts marked with × are the parts related to operation.

Engine start functions	Intelligent Key	Key switch	Ignition knob switch	Inside key antenna	Intelligent Key unit	CAN communication system	BCM	Combination meter	IPDM E/R	NATS antenna amp.	Steering lock solenoid
Engine start function by the Intelligent Key	×	×	×	×	×	×	×	×	×		×
Engine start function by the mechanical key		×			×	×	×		×	×	×

WARNING CHIME/BUZZER/LAMPS FUNCTION

Operation Description
The following warning chime (combination meter), Intelligent Key warning buzzer (front door LH), Intelligent Key warning buzzer (trunk)*, warning lamps "KEY" and “P-SHIFT” (with CVT) or "LOCK" (with M/T) are given to the user as warning information while using the intelligent key system.
- Ignition switch warning chime
- Ignition key warning chime
- OFF position warning chime
- Take away warning chime
- Door lock operation warning chime
- Intelligent key low battery warning
- P position warning (with CVT)
- LOCK position warning (with M/T)

NOTE:
For key-in-ignition warning chime related concerns only, refer to DI-41.

* : Sedan

Operation Condition

Operation	Condition	Warning chime/buzzer		Warning lamp		
		Chime (combination meter)	Buzzer(s)	KEY	LOCK (M/T)	P-SHIFT (CVT)
Ignition switch warning chime	• Mechanical key is out of ignition switch (Key switch is OFF) • Ignition switch is in the ACC, OFF or LOCK position. [ignition switch is pressed (ignition knob switch is ON).] • Driver door is open.	activate	—	—	—	—
Ignition key warning chime (When mechanical key is used)	• Mechanical key is inserted in ignition switch (key switch is ON). • Ignition switch is in the ACC, OFF or LOCK position. • Driver door is open.	activate	—	—	—	—

Operation		Condition	Warning chime/buzzer		Warning lamp		
			Chime (combination meter)	Buzzer(s)	KEY	LOCK (M/T)	P-SHIFT (CVT)
P position warning (CVT)		When selector lever is in other than P position, ignition switch is turned from ON to OFF.	activate	—	—	—	Flash
OFF position warning chime	For internal	• Ignition switch is turned from ACC to OFF. [ignition switch is pressed (ignition knob switch is ON).] • Ignition switch is in the LOCK position and pressed for 1 second.	activate	—	—	Flash	—
	For external	When driver door is opened and then closed while the OFF position warning chime above is operating	—	activate	—	—	—
Take away warning	Right after door is closed	Right after door is closed and the following conditions are met. • Ignition knob is pressed and in rotatable or rotated state • Intelligent Key can not be detected inside the vehicle	—	activate	Flash (red)	—	—
	Any door is opened	Any door is opened and the following conditions are met. • Ignition knob is pressed and in rotatable or rotated state • Intelligent Key unit will perform key ID verification with Intelligent Key through inside key antenna every 5 second, if the key ID verification is NG.	—	—	Flash (red)	—	—
	Take away from the window	Take away from the window and the following conditions are met. • Ignition knob is pressed and in rotatable or rotated state • Vehicle speed below 5 km/h (3 m.p.h.) • Intelligent Key unit will perform key ID verification with Intelligent Key through inside key antenna every 30 second, if the key ID verification is NG. (This warning function will be disabled if mechanical key is inserted into the key cylinder.) **NOTE:** Default setting of this function is OFF.	activate	—	Flash (red)	—	—
Door lock operation warning	Lock operation with request switch	Lock operation with request switch and the following condition is met. • Intelligent Key is inside the vehicle	—	activate	—	—	—
Intelligent Key low battery warning		When Intelligent Key is low battery, Intelligent Key unit is detected after ignition switch is turned ON.	—	—	Flash (green)	—	—

List of Operation Related Parts
Parts marked with × are the parts related to operation.

Warning and alarm functions		Intelligent Key	Key switch	Ignition knob switch	Ignition switch ACC position input signal	Ignition switch ON position input signal	Door switch	Door request switch	Inside key antenna	Outside key antenna (Driver, Passenger)	Outside key antenna (rear bumper)	Intelligent Key warning buzzer(s)	Intelligent Key unit	CAN communication system	BCM	Warning lamp	Warning chime (combination meter)
Ignition switch warning chime				×		×	×						×	×	×		×
Ignition key warning chime (When mechanical key used)			×			×	×							×	×		×
OFF position warning chime	For internal			×	×	×						×	×	×	×	×	×
	For external			×	×	×	×					×	×	×	×	×	
Take away warning chime	Right after door is closed	×	×	×			×		×			×	×	×	×	×	
	Any door is open	×	×	×			×		×				×	×	×	×	
	Take away from window	×	×	×			×		×			×	×	×	×	×	×
Door lock operation warning chime		×						×	×	×	×	×	×	×	×		
Intelligent Key low battery warning		×				×			×				×	×		×	

CHANGE SETTINGS FUNCTION

The settings for each function can be changed with the CONSULT-III.

Changing Settings Using CONSULT-III

The settings for the Intelligent Key system functions can be changed using CONSULT-III (WORK SUPPORT). Refer to BL-101, "CONSULT-III Application Item".

NOTE:

Once a function setting is changed, it will remain effective even if the battery is disconnected.

INTELLIGENT KEY REGISTRATION

Intelligent Key-ID registration is performed using the CONSULT-III.

CAUTION:

- **After a new Intelligent Key-ID is registered, be sure to check the function.**
- **When registering an additional Intelligent Key-ID, take any Intelligent Keys already registered and Intelligent Keys for any other vehicles out of the vehicle before starting.**

CONSULT-III can be used to check and delete Intelligent Key-IDs.

For further information, see the CONSULT-III Operation Manual NATS.

STEERING LOCK SOLENOID REGISTRATION

Steering Lock Solenoid ID Registration

CAUTION:

- **The method for registering a steering lock solenoid ID depends on the status of the steering lock solenoid and Intelligent Key unit (new or old unit).**
- **After registration is completed, press ignition switch with an Intelligent Key in the vehicle so that it can be turned, and confirm that it cannot be turned even when ignition switch is pressed without an Intelligent Key in the vehicle.**

For further information, see the CONSULT-III Operation Manual NATS-IVIS/NVIS.

CAN Communication System Description

INFOID:0000000001704000

Refer to LAN-6.

Schematic

INFOID:0000000001704001

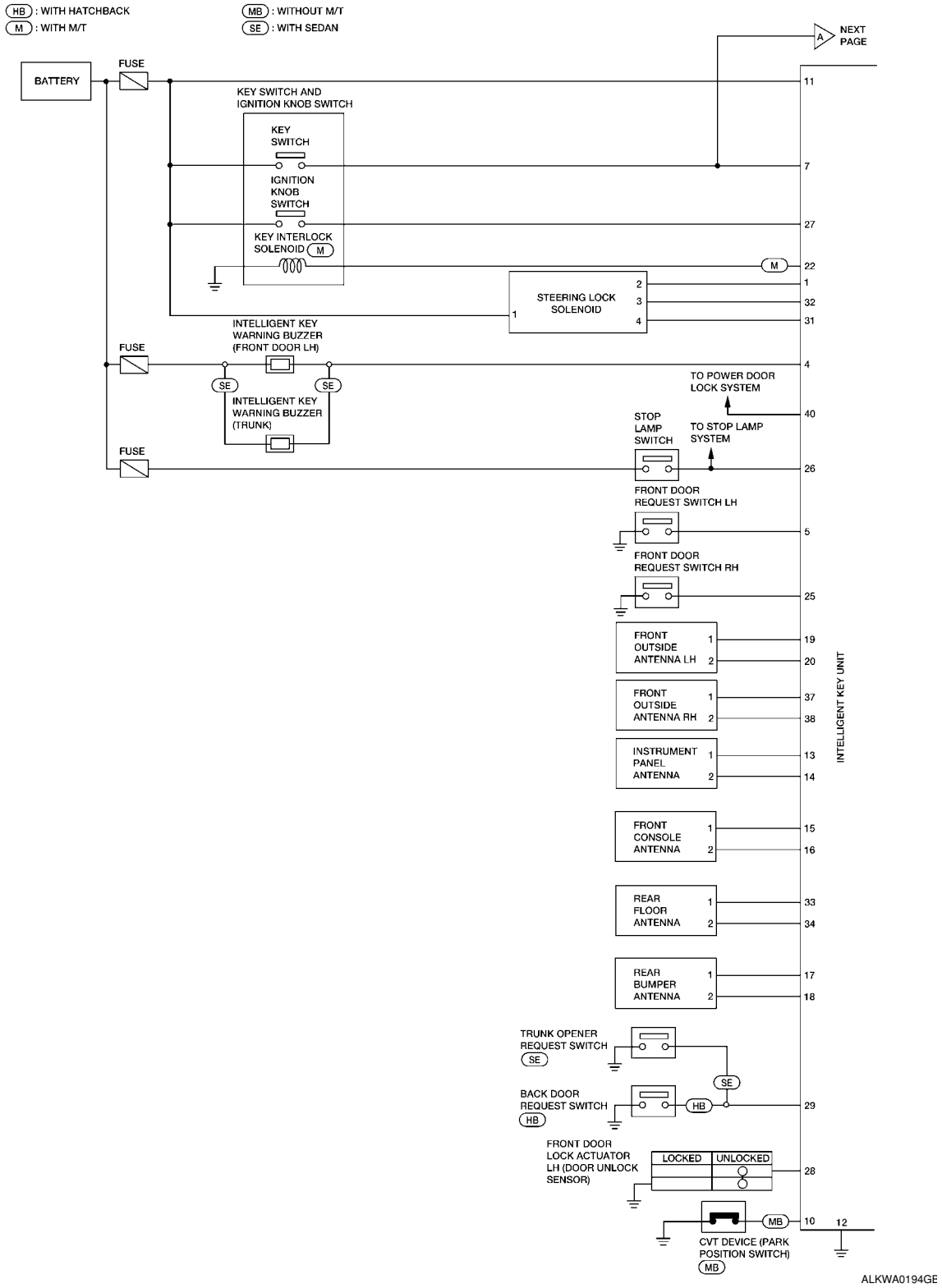

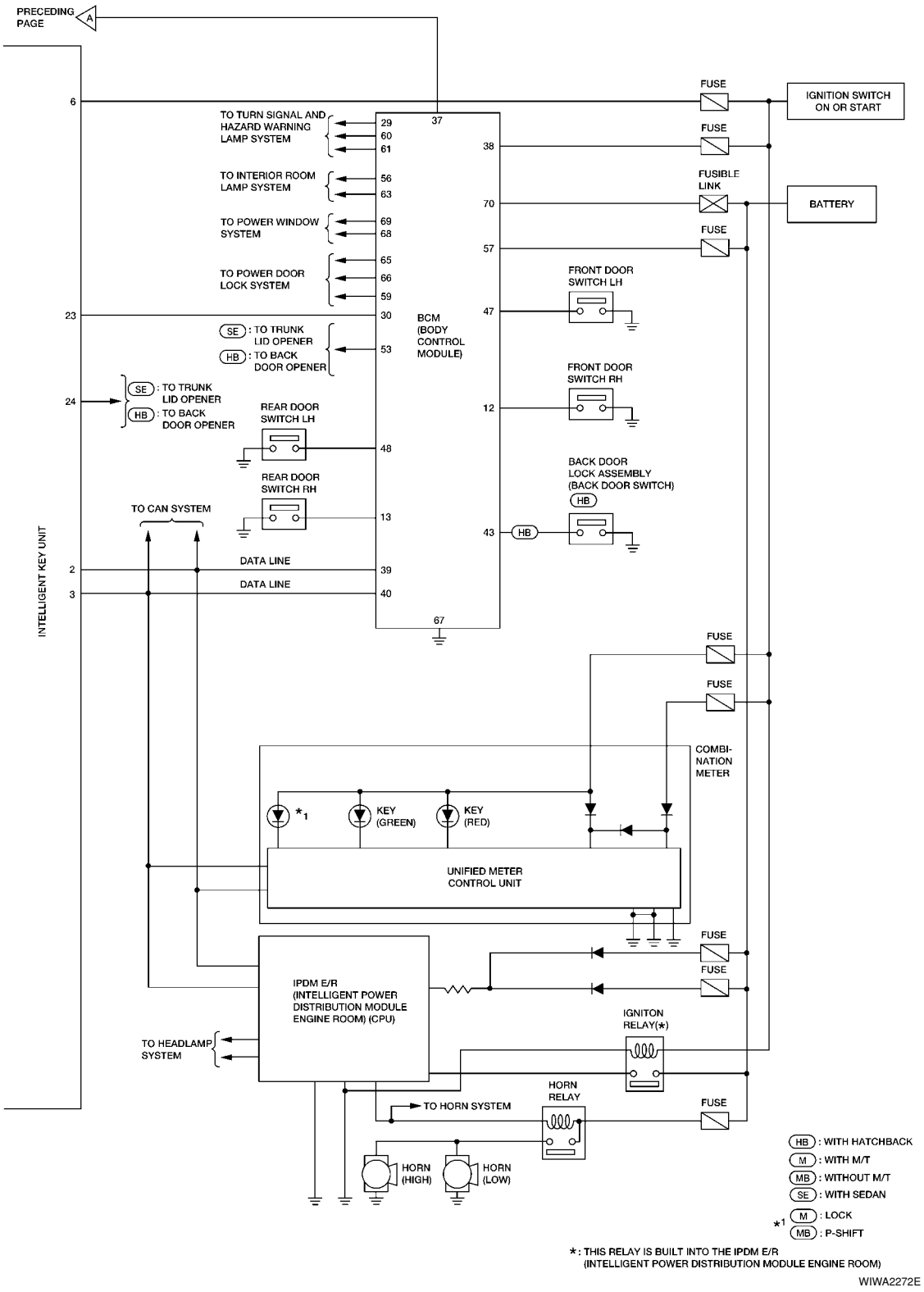
PRECEDING PAGE
A
INTELLIGENT KEY UNIT
6
23
24
2
3
TO TURN SIGNAL AND HAZARD WARNING LAMP SYSTEM
29
60
61
TO INTERIOR ROOM LAMP SYSTEM
56
63
TO POWER WINDOW SYSTEM
69
68
TO POWER DOOR LOCK SYSTEM
65
66
59
30
SE : TO TRUNK LID OPENER
HB : TO BACK DOOR OPENER
53
SE : TO TRUNK LID OPENER
HB : TO BACK DOOR OPENER
REAR DOOR SWITCH LH
48
REAR DOOR SWITCH RH
13
TO CAN SYSTEM
DATA LINE
DATA LINE
39
40
37
67
BCM (BODY CONTROL MODULE)
38
70
57
47
12
43
HB
FUSE
FUSE
FUSIBLE LINK
FUSE
IGNITION SWITCH ON OR START
BATTERY
FRONT DOOR SWITCH LH
FRONT DOOR SWITCH RH
BACK DOOR LOCK ASSEMBLY (BACK DOOR SWITCH)
HB
FUSE
FUSE
COMBI-NATION METER
*1
KEY (GREEN)
KEY (RED)
UNIFIED METER CONTROL UNIT
FUSE
FUSE
IPDM E/R (INTELLIGENT POWER DISTRIBUTION MODULE ENGINE ROOM) (CPU)
IGNITON RELAY(*)
TO HEADLAMP SYSTEM
HORN RELAY
TO HORN SYSTEM
FUSE
HORN (HIGH)
HORN (LOW)
HB : WITH HATCHBACK
M : WITH M/T
MB : WITHOUT M/T
SE : WITH SEDAN
*1 M : LOCK
MB : P-SHIFT
*: THIS RELAY IS BUILT INTO THE IPDM E/R (INTELLIGENT POWER DISTRIBUTION MODULE ENGINE ROOM)
WIWA2272E

Wiring Diagram - I/KEY -

INFOID:0000000001704002

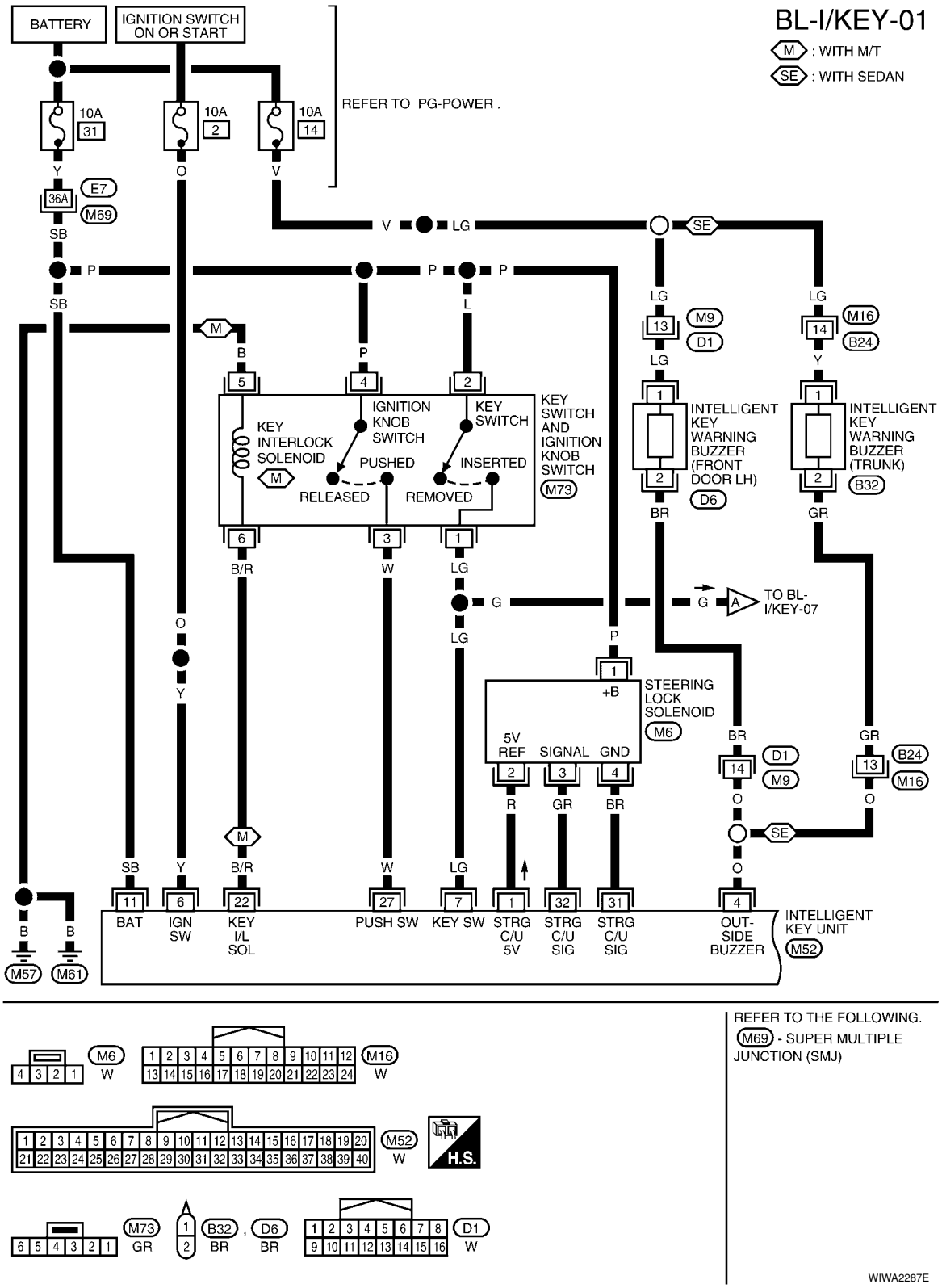

BL-I/KEY-02

HB : WITH HATCHBACK
SE : WITH SEDAN

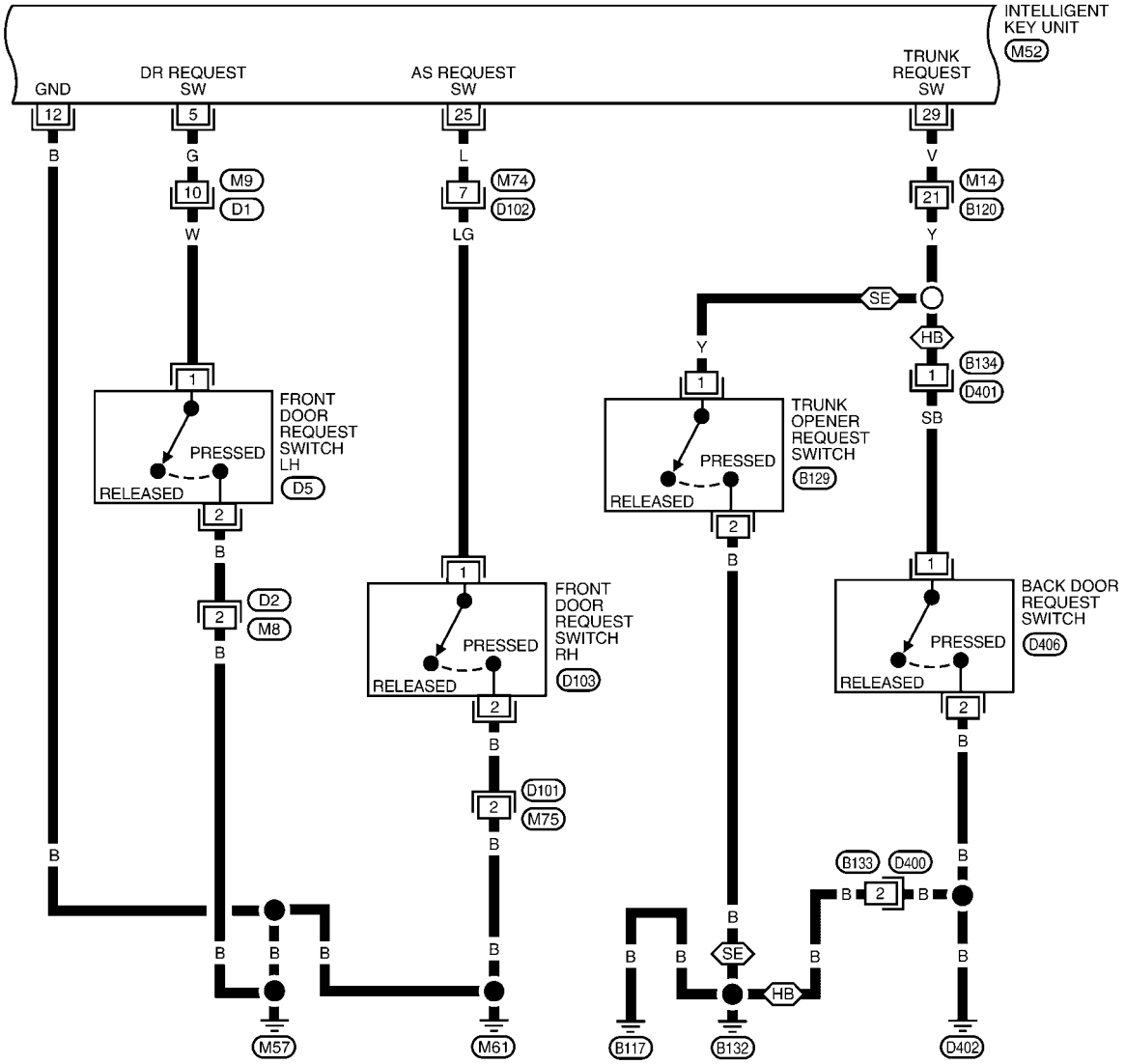

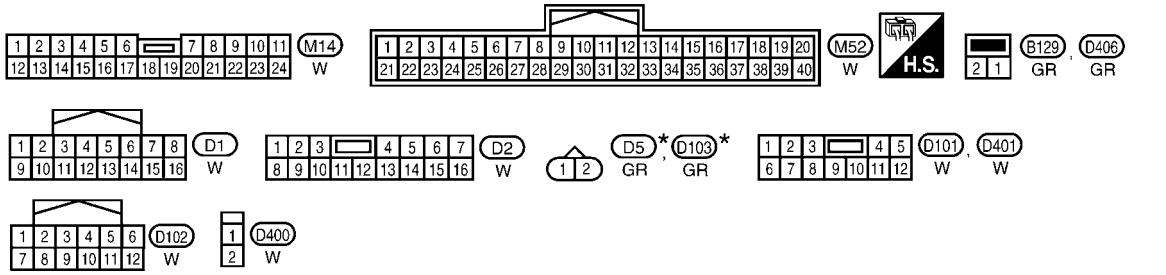

★: THIS CONNECTOR IS NOT SHOWN IN "HARNESS LAYOUT" OF PG SECTION.

WIWA2273E

BL-I/KEY-03

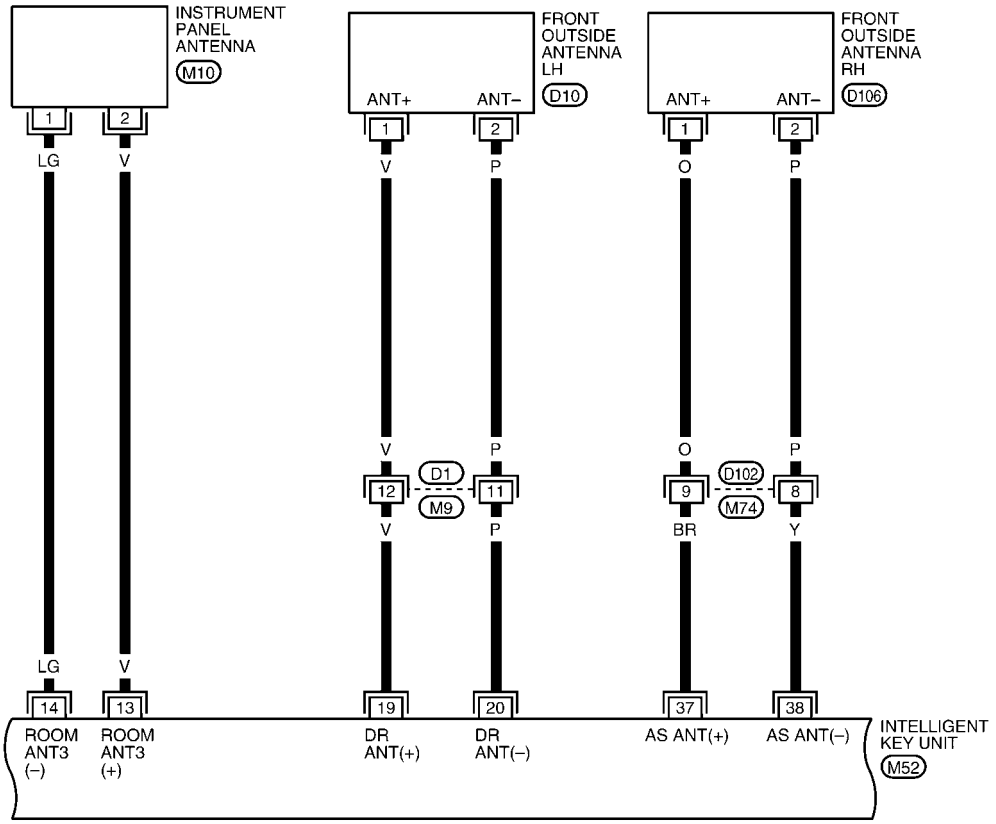

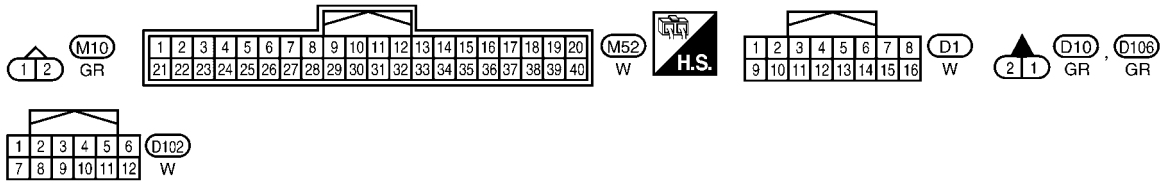

ALKWA0195GE

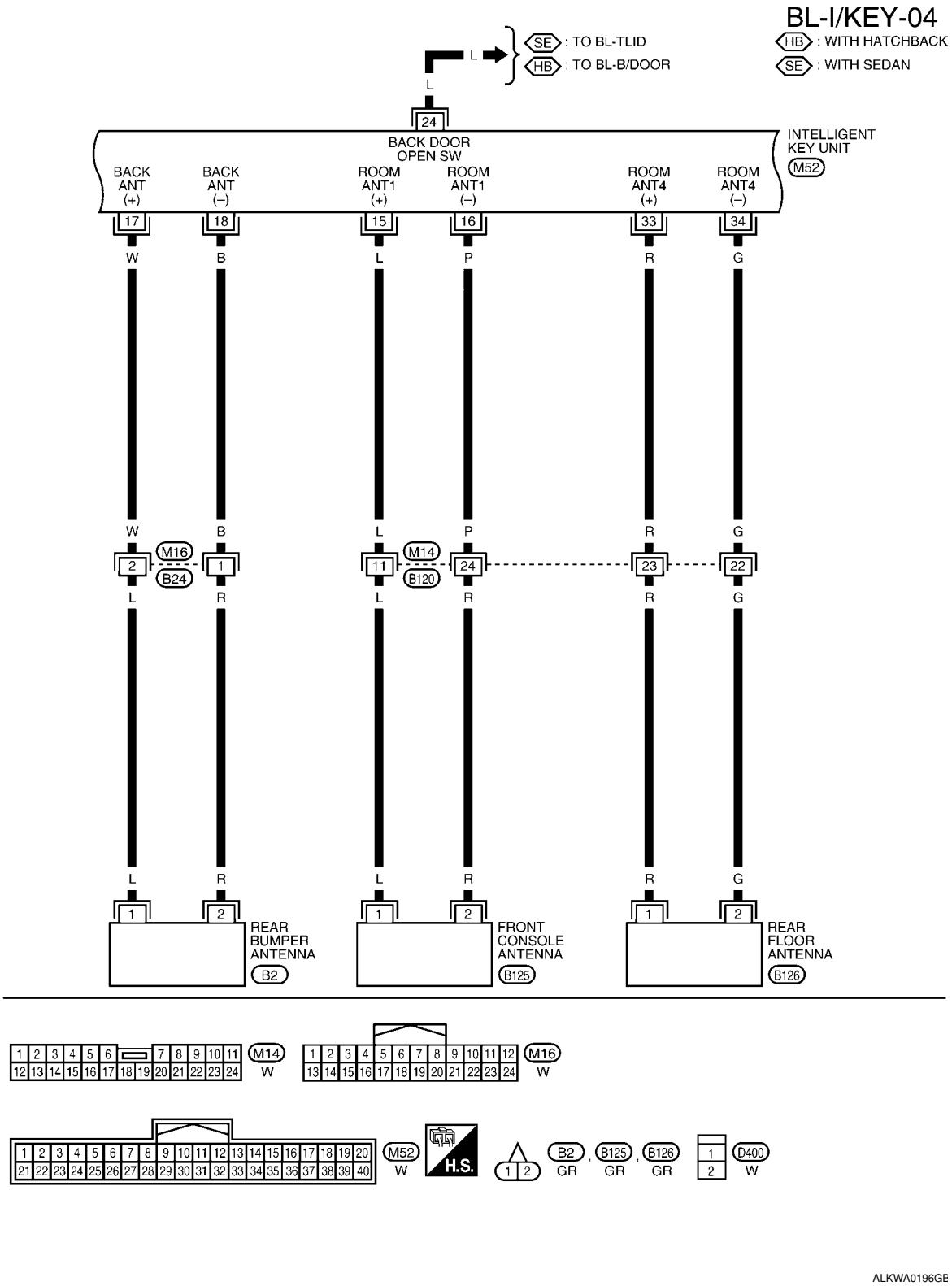
BL-I/KEY-04
SE : TO BL-TLID
HB : TO BL-B/DOOR
HB : WITH HATCHBACK
SE : WITH SEDAN
INTELLIGENT KEY UNIT
M52
BACK DOOR OPEN SW
BACK ANT (+)
BACK ANT (–)
ROOM ANT1 (+)
ROOM ANT1 (–)
ROOM ANT4 (+)
ROOM ANT4 (–)
M16
B24
M14
B120
REAR BUMPER ANTENNA
B2
FRONT CONSOLE ANTENNA
B125
REAR FLOOR ANTENNA
B126
M14
M16
M52
H.S.
B2
B125
B126
D400
ALKWA0196GE

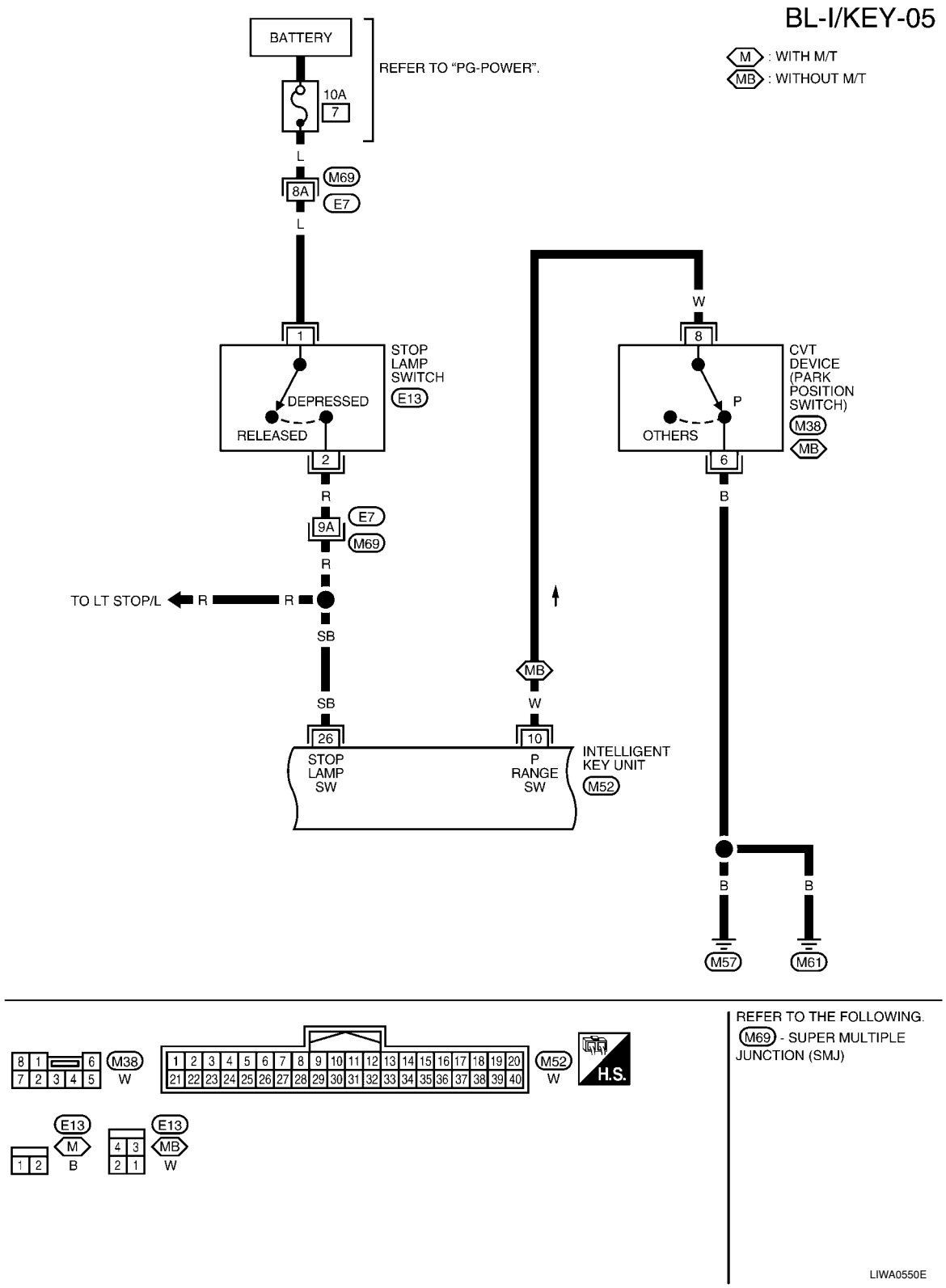
BL-I/KEY-05
M : WITH M/T
MB : WITHOUT M/T
BATTERY
REFER TO "PG-POWER".
10A
7
L
M69
8A
E7
L
1
STOP LAMP SWITCH
E13
DEPRESSED
RELEASED
2
R
E7
9A
M69
R
TO LT STOP/L
R
R
SB
SB
26
STOP LAMP SW
W
8
CVT DEVICE (PARK POSITION SWITCH)
M38
MB
P
OTHERS
6
B
MB
W
10
P RANGE SW
INTELLIGENT KEY UNIT
M52
B
B
M57
M61
M38
W
M52
W
H.S.
E13
M
B
E13
MB
W
REFER TO THE FOLLOWING.
M69 - SUPER MULTIPLE JUNCTION (SMJ)
LIWA0550E

BL-I/KEY-06

: DATA LINE

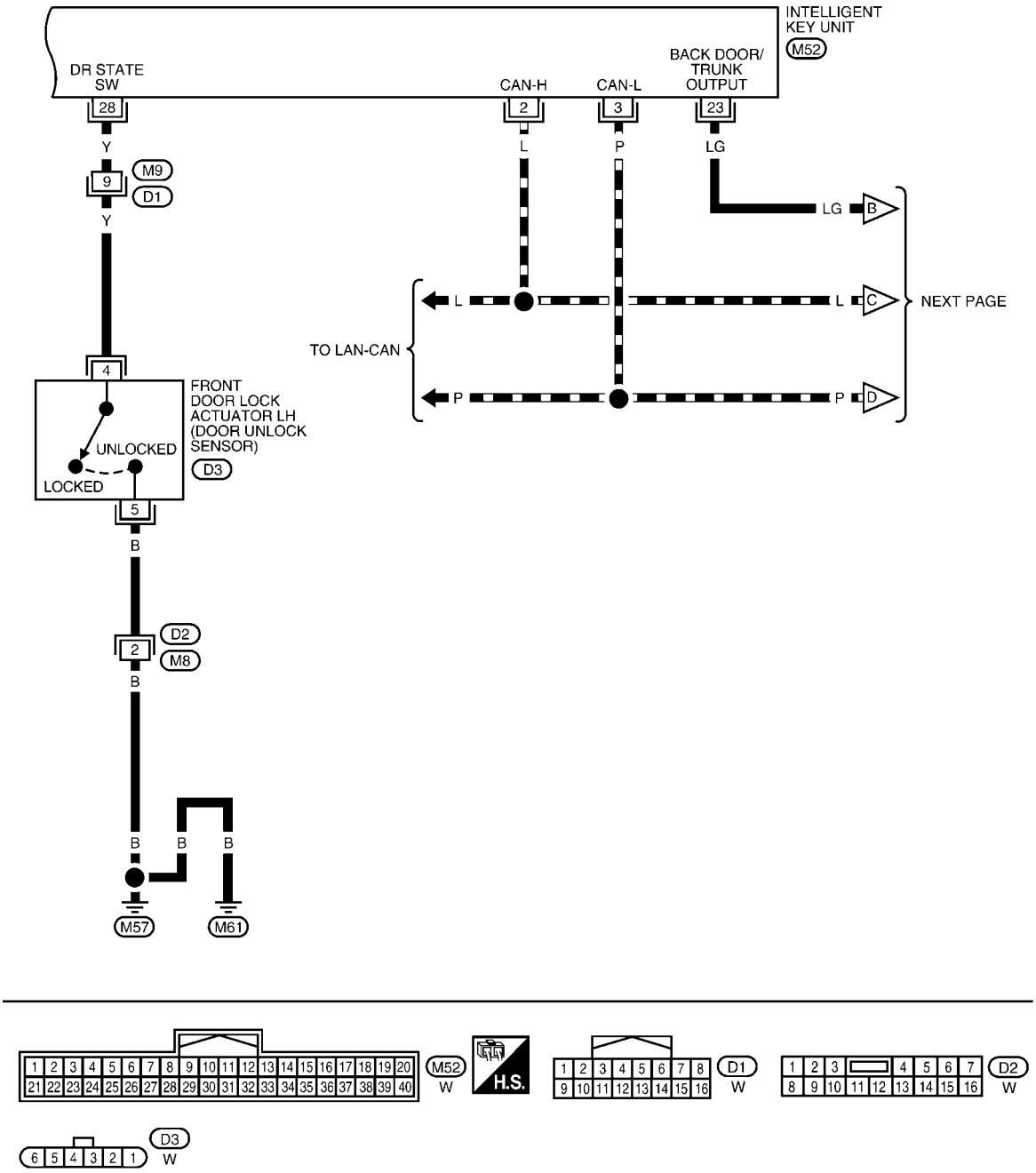

WIWA2288E

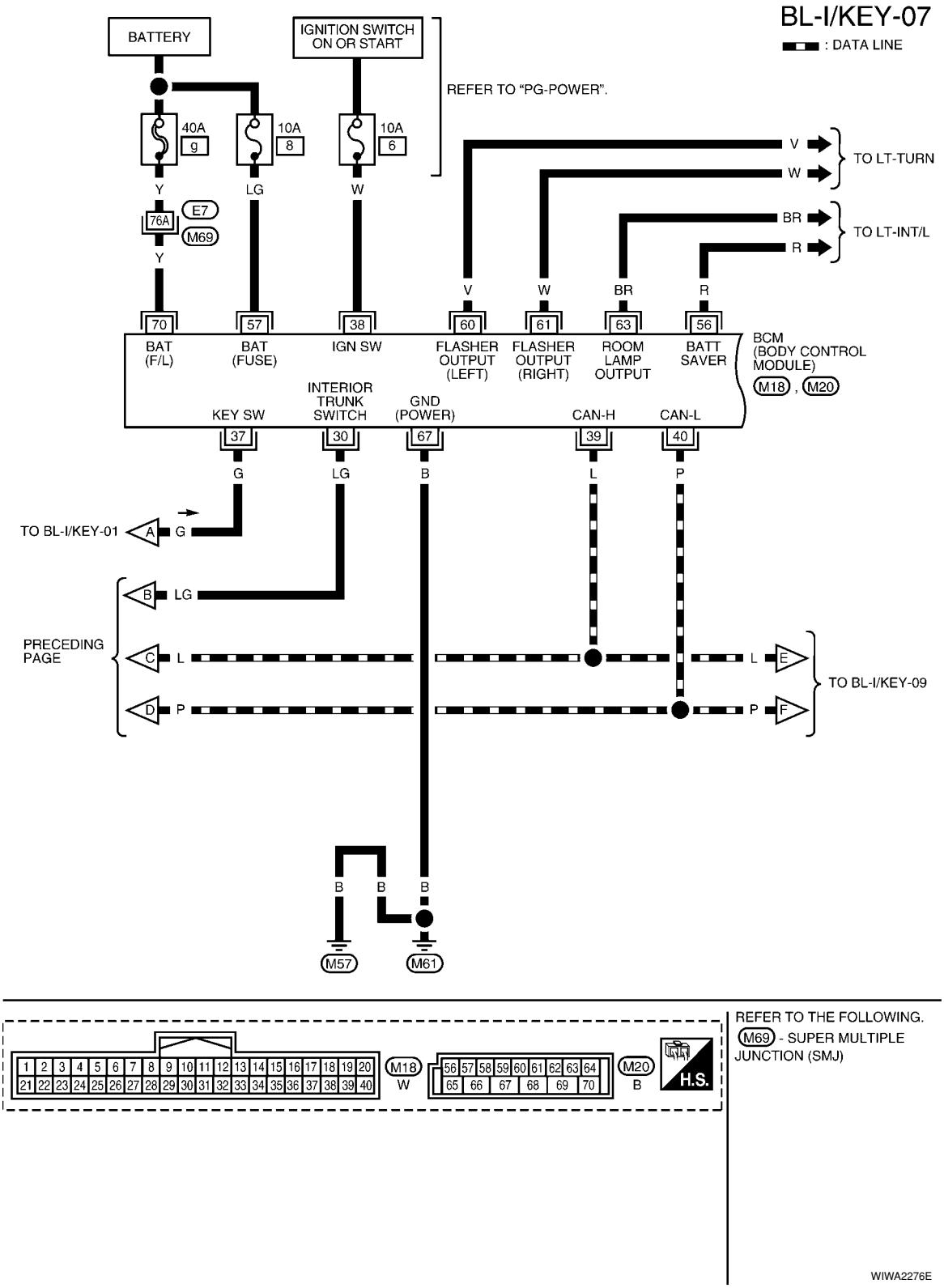
BL-I/KEY-07
: DATA LINE
BATTERY
IGNITION SWITCH ON OR START
REFER TO "PG-POWER".
40A g
10A 8
10A 6
Y
LG
W
76A
E7
M69
Y
V
W
BR
R
TO LT-TURN
TO LT-INT/L
70
57
38
60
61
63
56
BAT (F/L)
BAT (FUSE)
IGN SW
FLASHER OUTPUT (LEFT)
FLASHER OUTPUT (RIGHT)
ROOM LAMP OUTPUT
BATT SAVER
BCM (BODY CONTROL MODULE)
M18 , M20
KEY SW
INTERIOR TRUNK SWITCH
GND (POWER)
CAN-H
CAN-L
37
30
67
39
40
G
LG
B
L
P
TO BL-I/KEY-01
A
G
B
LG
PRECEDING PAGE
C
L
D
P
L
E
P
F
TO BL-I/KEY-09
B
B
B
M57
M61
M18
W
M20
B
H.S.
REFER TO THE FOLLOWING.
M69 - SUPER MULTIPLE JUNCTION (SMJ)
WIWA2276E

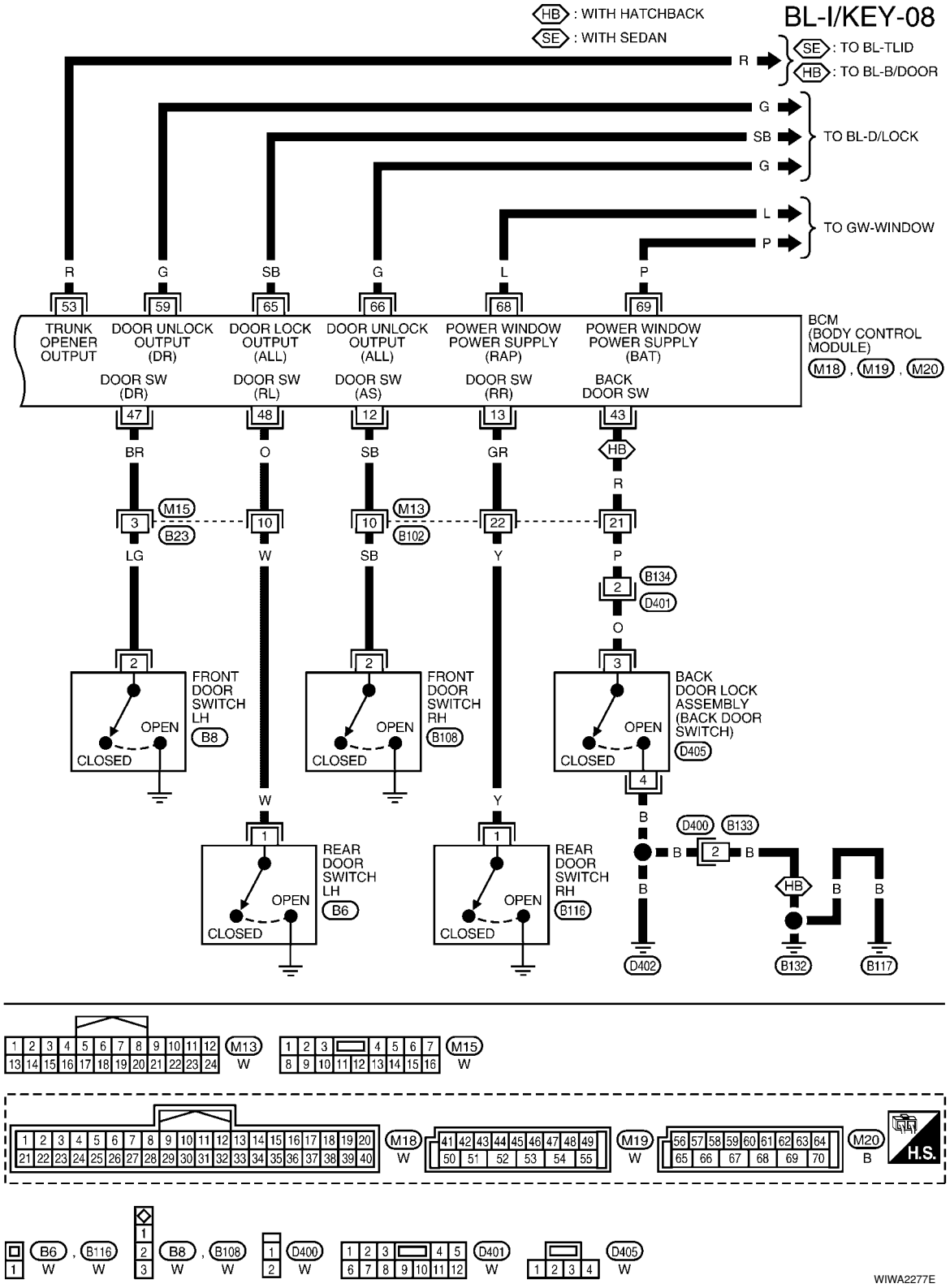
BL-I/KEY-08
HB : WITH HATCHBACK
SE : WITH SEDAN
SE : TO BL-TLID
HB : TO BL-B/DOOR
TO BL-D/LOCK
TO GW-WINDOW
TRUNK OPENER OUTPUT
DOOR UNLOCK OUTPUT (DR)
DOOR LOCK OUTPUT (ALL)
DOOR UNLOCK OUTPUT (ALL)
POWER WINDOW POWER SUPPLY (RAP)
POWER WINDOW POWER SUPPLY (BAT)
DOOR SW (DR)
DOOR SW (RL)
DOOR SW (AS)
DOOR SW (RR)
BACK DOOR SW
BCM (BODY CONTROL MODULE)
M18 , M19 , M20
FRONT DOOR SWITCH LH
B8
FRONT DOOR SWITCH RH
B108
BACK DOOR LOCK ASSEMBLY (BACK DOOR SWITCH)
D405
REAR DOOR SWITCH LH
B6
REAR DOOR SWITCH RH
B116
OPEN
CLOSED
D400
B133
D402
B132
B117
H.S.
WIWA2277E

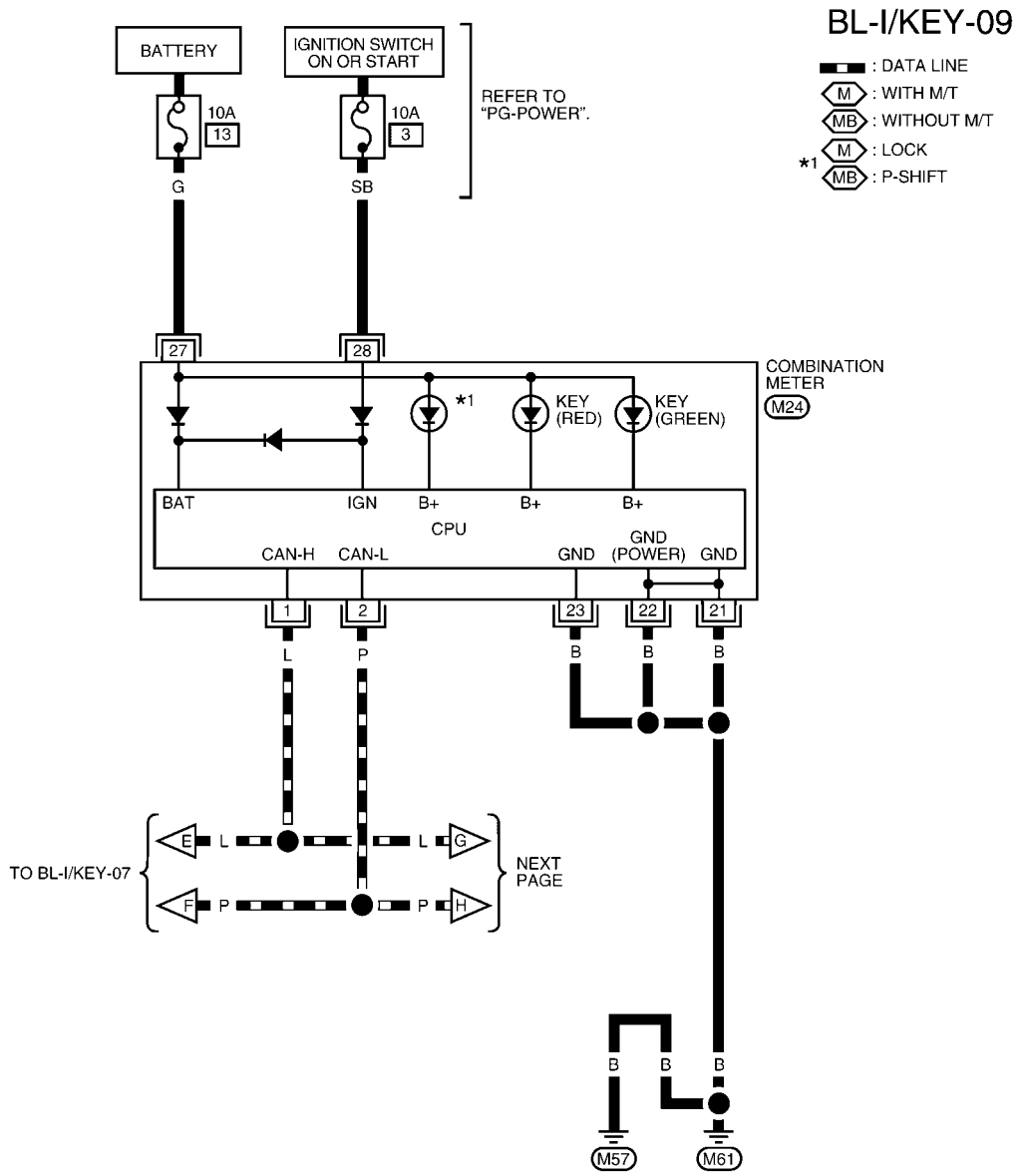
BL-I/KEY-09
: DATA LINE
M : WITH M/T
MB : WITHOUT M/T
*1 M : LOCK
MB : P-SHIFT
BATTERY
IGNITION SWITCH ON OR START
10A 13
10A 3
REFER TO "PG-POWER".
G
SB
27
28
COMBINATION METER
M24
*1
KEY (RED)
KEY (GREEN)
BAT
IGN
B+
B+
B+
CPU
CAN-H
CAN-L
GND
GND (POWER)
GND
1
2
23
22
21
L
P
B
B
B
TO BL-I/KEY-07
E
L
L
G
F
P
P
H
NEXT PAGE
B
B
B
M57
M61

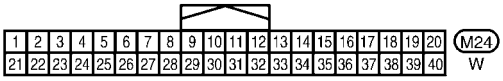
1 2 3 4 5 6 7 8 9 10 11 12 13 14 15 16 17 18 19 20
21 22 23 24 25 26 27 28 29 30 31 32 33 34 35 36 37 38 39 40
M24
W

WIWA2285E

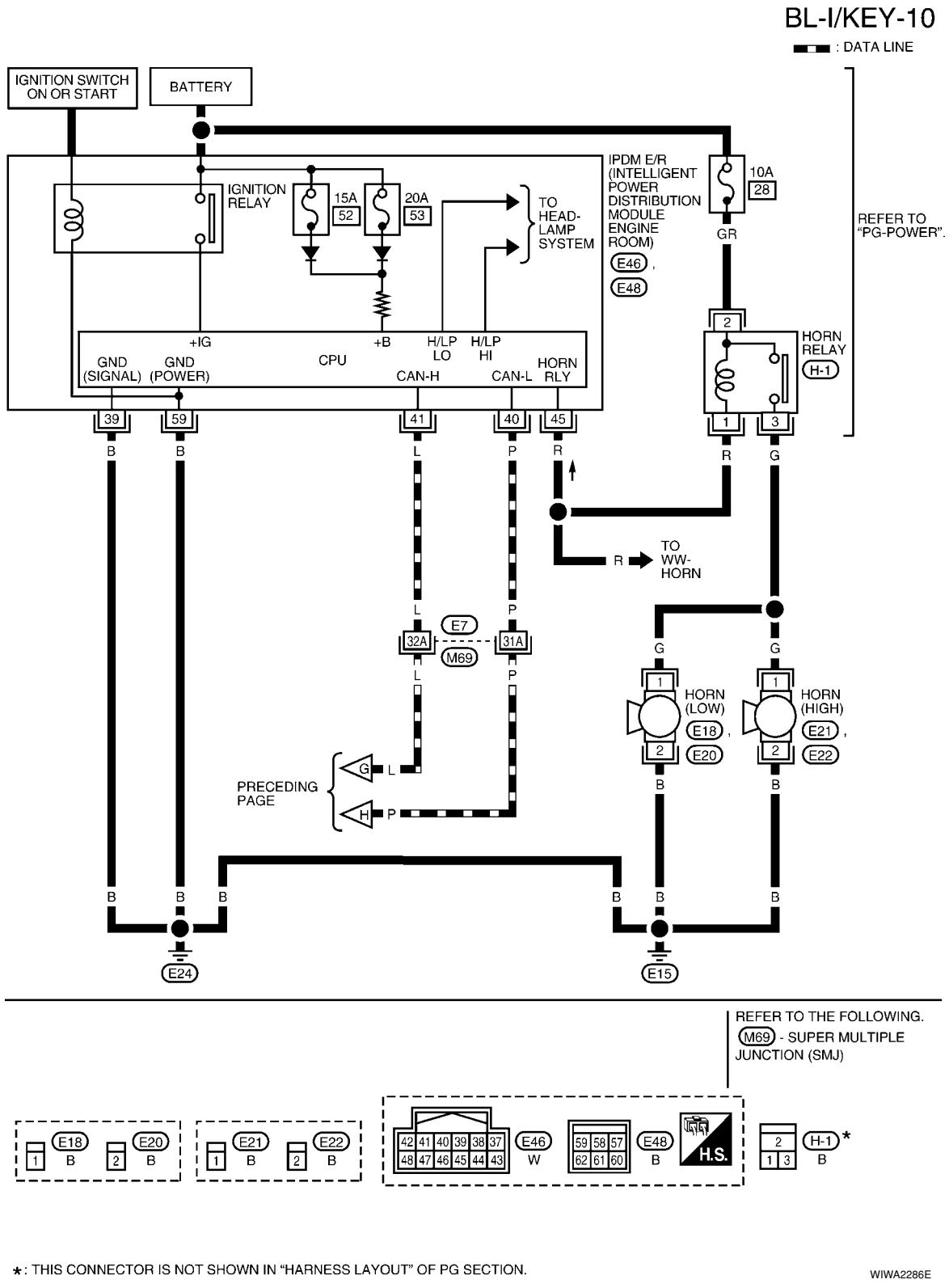

*: THIS CONNECTOR IS NOT SHOWN IN "HARNESS LAYOUT" OF PG SECTION.

Intelligent Key Unit Harness Connector Terminal Layout

INFOID:0000000001704003

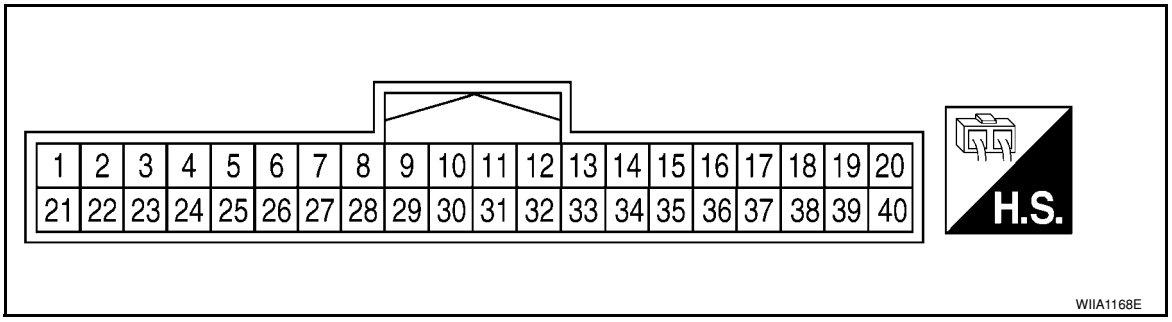

Terminal and Reference Value for Intelligent Key Unit

INFOID:0000000001704004

Terminal	Wire Color	Item	Condition			Voltage (V) Approx.
			Ignition Switch Position	Operation or Conditions		
1	R	Steering lock solenoid power supply	LOCK	—		5
2	L	CAN-H	—	—		—
3	P	CAN-L	—	—		—
4	O	Intelligent Key warning buzzer	LOCK	Operate door request switch.	Buzzer OFF	Battery voltage
					Sound buzzer	0
5	G	Front door request switch LH	—	Press door request switch (driver side).		0
				Other than above		5
6	Y	Ignition switch (ON)	ON	—		Battery voltage
7	LG	Key switch	LOCK	Insert mechanical key into ignition switch.		Battery voltage
				Remove mechanical key from ignition switch.		0
10*1	W	CVT device (park position switch)	ON	Shift lever in park position.		0
				Other than above		Battery voltage
11	SB	Power source (Fuse)	—	—		Battery voltage
12	B	Ground	—	—		0
13	V	Instrument panel antenna (+) signal	LOCK	• Any door open → all door close • Press ignition knob switch: ON (Ignition knob switch)		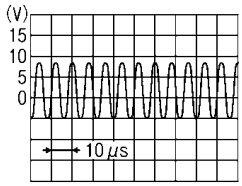 PIIB5502J
14	LG	Instrument panel antenna (-) signal				
15	L	Front console antenna (+) signal	LOCK	• Any door open → all door close • Press ignition knob switch: ON (Ignition knob switch)		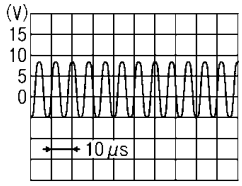 PIIB5502J
16	P	Front console antenna (-) signal				

Terminal	Wire Color	Item	Condition: Ignition Switch Position	Condition: Operation or Conditions	Voltage (V) Approx.
17	W	Rear bumper antenna (+) signal	LOCK	Press back door request switch.	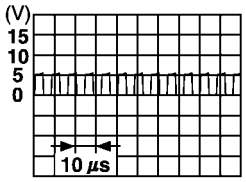 SIIA1910J
18	B	Rear bumper antenna (-) signal			
19	V	Front outside antenna LH (+) signal	LOCK	Press door request switch LH.	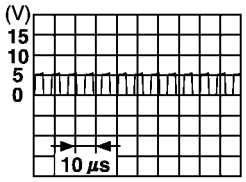 SIIA1910J
20	P	Front outside antenna LH (-) signal			
22*2	BR	Key interlock solenoid	—	With Intelligent Key present or mechanical key in ignition cylinder, press "PUSH" button on ignition cylinder.	Battery voltage
				Other than above	0
23	LG	Back door open output	—	Back door open (switch closed)	0
				Back door closed (switch open)	5
24	V	Back door opener switch	—	Press and hold back door switch.	0
				Other than above	5
25	L	Front door request switch RH	—	Press front door request switch RH.	0
				Other than above	5
26	SB	Stop lamp switch	—	Depress brake pedal	Battery voltage
				Other than above	0
27	W	Ignition knob switch	—	Press ignition switch.	Battery voltage
				Release ignition switch.	0
28	Y	Unlock sensor (driver side)	—	Door (driver side) is locked.	5
				Door (driver side) is unlocked.	0
29	V	Back door request switch (hatchback)	—	Press back door request switch.	0
				Other than above	5
		Trunk opener request switch (sedan)	—	Press trunk opener request switch.	0
				Other than above	5
31	BR	Steering lock solenoid ground	—	—	0
32	GR	Steering lock solenoid communication signal	LOCK	When Intelligent Key is inside vehicle, press ignition knob switch.	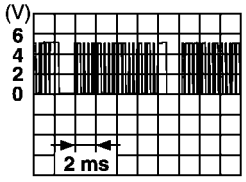 SIIA1911J
				Other than above	5

Terminal	Wire Color	Item	Condition		Voltage (V) Approx.
			Ignition Switch Position	Operation or Conditions	
33	R	Rear floor antenna (+) signal	LOCK	• Any door open → all door close • Press ignition knob switch: ON (Ignition knob switch)	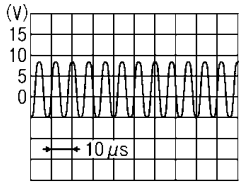 PIIB5502J
34	G	Rear floor antenna (-) signal			
37	BR	Front outside antenna RH (+) signal	LOCK	Press door request switch RH.	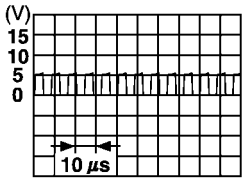 SIIA1910J
38	Y	Front outside antenna RH (-) signal			

*1: With continuously variable transmission (CVT).

*2: With manual transmission (M/T).

Steering Lock Solenoid Harness Connector Terminal Layout

INFOID:0000000001704005

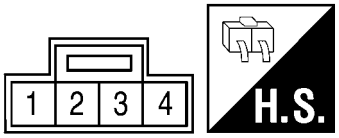

WIIA1283E

Terminal and Reference Value for Steering Lock Solenoid

INFOID:0000000001704006

Terminal	Wire Color	Signal Designation	Condition		Voltage (V) Approx.
			Ignition Switch Position	Operation or Conditions	
1	P	Battery power supply	LOCK	—	Battery voltage
2	R	Steering lock solenoid power supply	LOCK	—	5
3	GR	Steering lock solenoid communication signal	LOCK	When Intelligent Key is inside vehicle, press ignition knob switch.	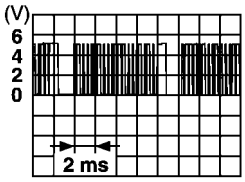 SIIA1911J
				Other than the above	5
4	BR	Steering lock solenoid ground	—	—	0

Terminal and Reference Value for BCM

INFOID:0000000001704007

Refer to BCS-11, "Terminal and Reference Value for BCM".

Trouble Diagnosis Procedure

INFOID:0000000001704008

PRELIMINARY CHECK

1. GET SYMPTOMS

Listen to customer concerns. (Get symptoms)

NOTE:

If customer reports a “No start” condition, request all Intelligent Keys to be brought to the dealer in case of Intelligent Key system malfunction.

Intelligent Key or mechanical key service request>>For further information, refer to CONSULT-III operation manual.
Malfunctions>>GO TO 2.

2. CHECK BCM CONFIGURATION

Confirm BCM configuration for "I-KEY" is set to "WITH". Refer to BCS-17, "Configuration".

OK or NG

OK >> GO TO 3.
NG >> Change BCM configuration for "I-KEY" to "WITH". Refer to BCS-17, "Configuration".

3. START ENGINE WITH INTELLIGENT KEY

Check if the engine could be started by all registered Intelligent Keys.

The engine cannot be started by some Intelligent Keys>>Intelligent Key is low battery or malfunction. Refer to BL-142, "Intelligent Key Battery Replacement".
The engine cannot be started by all Intelligent Keys>>GO TO 4.
The engine can be started by all Intelligent Keys>>GO TO 5.

4. CHECK “KEY” WARNING LAMP ILLUMINATION

When pushing the ignition switch, check if “KEY” warning lamp in combination meter illuminates.

KEY warning lamp illuminates green>>GO TO BL-103, "Trouble Diagnosis Symptom Chart".
KEY warning lamp illuminates red>>GO TO BL-103, "Trouble Diagnosis Symptom Chart".
Does not illuminate>>GO TO BL-103, "Trouble Diagnosis Symptom Chart".

5. START ENGINE WITH MECHANICAL KEY

Check if the engine could be started by all registered mechanical keys.

No start by some mechanical keys>>Register mechanical key. Refer to CONSULT-III operation manual.
Engine starts by mechanical or Intelligent Key>>GO TO BL-103, "Trouble Diagnosis Symptom Chart".
No start by mechanical key or Intelligent Key>>GO TO NATS BL-215, "Trouble Diagnosis Procedure".
Engine starts with Intelligent Key or mechanical key>>GO TO "WORK FLOW".
The engine can be started by all mechanical keys>>GO TO 6.

6. PERFORM SELF-DIAGNOSIS

1. Turn ignition switch to ON by carrying the Intelligent Key.
2. Perform self-diagnosis of Intelligent Key system with CONSULT-III.

DTC is displayed>>GO TO BL-101, "CONSULT-III Application Item".
DTC is not displayed>>GO TO BL-103, "Trouble Diagnosis Symptom Chart".

WORK FLOW

Before performing the work flow, carry out preliminary check. Refer to "PRELIMINARY CHECK".

1.CHECK FUNCTION OF INTELLIGENT KEY SYSTEM

Check if the function related to Intelligent Key system operates normally.

All functions of Intelligent Key system do not operate>>GO TO BL-103, "Trouble Diagnosis Symptom Chart".
Specific function of Intelligent Key system does not operate>>GO TO 2.

2.CHECK POWER DOOR LOCK OPERATION

Check if door lock/unlock function operates with door lock and unlock switch.

OK or NG

OK >> GO TO 3.
NG >> GO TO BL-22.

3.CHECK DOOR REQUEST SWITCH OPERATION

Check if door lock/unlock function operates with request switch.

OK or NG

OK >> GO TO 4.
NG >> GO TO BL-103, "Trouble Diagnosis Symptom Chart".

4.CHECK REMOTE KEYLESS FUNCTION

Check if the following function responds with Intelligent Key button.
- Door lock/unlock function
- Panic alarm function

OK or NG

OK >> GO TO 5.
NG >> GO TO BL-103, "Trouble Diagnosis Symptom Chart".

5.CHECK HAZARD AND BUZZER REMINDER FUNCTION

Check if hazard and buzzer reminder function responds with the following switches.
- Door request switch
- Intelligent Key button

OK or NG

OK >> GO TO 6.
NG >> GO TO BL-103, "Trouble Diagnosis Symptom Chart".

6.CHECK WARNING CHIME FUNCTION

Check if warning chime function operates normally according to system description. Refer to BL-76, "System Description".

OK or NG

OK >> GO TO 7.
NG >> GO TO BL-103, "Trouble Diagnosis Symptom Chart".

7.CHECK WARNING LAMP FUNCTION

Check if warning lamp could be turn on normally according to system description. Refer to BL-76, "System Description".

OK or NG

OK >> End of inspection.
NG >> GO TO BL-103, "Trouble Diagnosis Symptom Chart".

CONSULT-III Functions (INTELLIGENT KEY)

INFOID:0000000001704009

CONSULT-III can display each diagnostic item using the diagnostic test modes as shown below.

Part to be diagnosed	Test item, Diagnosis mode	Description
Intelligent Key	WORK SUPPORT	Changes settings for each function.
	SELF-DIAG RESULTS	Intelligent Key unit performs CAN communication diagnosis.
	DATA MONITOR	Displays Intelligent Key unit input data in real time.
	CAN DIAGNOSTIC SUPPORT MONITOR	The results of transmit/receive diagnosis of CAN Communication can be read.
	ACTIVE TEST	Operation of electrical loads can be checked by sending driving signal to them.
	ECU PART NUMBER	Displays Intelligent Key unit part No.

CONSULT-III Application Item

INFOID:0000000001704011

SELF-DIAGNOSTIC RESULTS

Self-diag results	Description	Diagnosis procedure	Reference page
CAN COMM	Malfunction is detected in CAN communication.	Check CAN communication system.	BL-109
CAN COMM2	Intelligent Key unit internal malfunction	Check CAN communication system.	BL-109
STRG COMM	Malfunction is detected in communication of Intelligent Key unit and steering lock solenoid.	Check steering lock solenoid.	BL-131
I-KEY C/U	Intelligent Key unit internal malfunction	Replace Intelligent Key unit.	BL-142
IMMU	NATS malfunction	Check NATS.	BL-210

DATA MONITOR

Monitor item	Content
PUSH SW	Indicates [ON/OFF] condition of ignition knob switch.
KEY SW	Indicates [ON/OFF] condition of key switch.
DR REQ SW	Indicates [ON/OFF] condition of door request switch (driver side).
AS REQ SW	Indicates [ON/OFF] condition of door request switch (passenger side).
BD/TR REQ SW	Indicates [ON/OFF] condition of back door request switch.
IGN SW	Indicates [ON/OFF] condition of ignition switch in ON position.
ACC SW	Indicates [ON/OFF] condition of ignition switch in ACC position.
STOP LAMP SW	Indicates [ON/OFF] condition of stop lamp switch.
P RANGE SW	Indicates [ON/OFF] condition of shift lever park position.
BD OPEN SW	Indicates [ON/OFF] condition of back door open switch.
DOOR LOCK SIG*	Indicates [ON/OFF] condition of door lock signal from Intelligent Key button.
DOOR UNLOCK SIG*	Indicates [ON/OFF] condition of door unlock signal from Intelligent Key button
DOOR SW DR*	Indicates [OPEN/CLOSE] condition of front door switch driver side from BCM via CAN communication line.
DOOR SW AS*	Indicates [OPEN/CLOSE] condition of front door switch passenger side from BCM via CAN communication line.
DOOR SW RR*	Indicates [OPEN/CLOSE] condition of rear door switch RH from BCM via CAN communication line.
DOOR SW RL*	Indicates [OPEN/CLOSE] condition of rear door switch LH from BCM via CAN communication line.
TRUNK SW*	This is displayed even when it is not equipped.
VEHICLE SPEED*	Indicates [km/h] condition of vehicle speed.

*: Select “SELECTION FROM MENU”.

ACTIVE TEST

Test item	Description
DOOR LOCK/UNLOCK	This test is able to check door lock/unlock operation. • The all door lock actuators are unlocked when “ALL UNLK” on CONSULT-III screen is touched. • The all door lock actuators are locked when “LOCK” on CONSULT-III screen is touched.
ANTENNA	This test is able to check Intelligent Key antenna operation. When the following conditions are met, hazard warning lamps flash. • Inside key antenna (front console) detects Intelligent Key, when “ROOM ANT1” on CONSULT-III screen is touched. • Inside key antenna (instrument panel and rear floor) detects Intelligent Key, when “ROOM ANT2” on CONSULT-III screen is touched. • Outside key antenna (driver side) detects Intelligent Key, when “DRIVER ANT” on CONSULT-III screen is touched. • Outside key antenna (passenger side) detects Intelligent Key, when “ASSIST ANT” on CONSULT-III screen is touched. • Outside key antenna (rear bumper) detects Intelligent Key, when “BK DOOR ANT” on CONSULT-III screen is touched.
OUTSIDE BUZZER(S) (DRIVER DOOR), (TRUNK)*	This test is able to check Intelligent Key warning buzzer operation. Intelligent Key warning buzzer sounds when “ON” on CONSULT-III screen is touched.
INSIDE BUZZER (CHIME)	This test is able to check Intelligent Key warning chime (Instrument panel) operation. • Take away warning chime sounds when “TAKE OUT” on CONSULT-III screen is touched. • Ignition switch warning chime sounds when “KNOB” on CONSULT-III screen is touched. • Ignition key warning chime sounds when “KEY” on CONSULT-III screen is touched.
INDICATOR	This test is able to check warning lamp operation. • “KEY” Warning lamp (Green) illuminates when “BLUE ON” on CONSULT-III screen is touched. • “KEY” Warning lamp (Red) illuminates when “RED ON” on CONSULT-III screen is touched. • “LOCK” Warning lamp illuminates when “KNOB ON” on CONSULT-III screen is touched. • “KEY” Warning lamp (Green) flashes when “BLUE IND” on CONSULT-III screen is touched. • “KEY” Warning lamp (RED) flashes when “BLUE IND” on CONSULT-III screen is touched. • “P-SHIFT” Warning lamp flashes when “KNOB ON” on CONSULT-III screen is touched.

* : Sedan

WORK SUPPORT

Monitor item	Description
CONFIRM KEY FOB ID	It can be checked whether Intelligent Key ID code is registered or not in this mode.
TAKE OUT FROM WINDOW WARN	Take away warning chime (from window) mode can be changed to operate (ON) or not operate (OFF) with this mode. The operation mode will be changed when “CHANGE SETT” on CONSULT-III screen is touched.
LOW BAT OF KEY FOB WARN	Intelligent Key low battery warning mode can be changed to operate (ON) or not operate (OFF) with this mode. The operation mode will be changed when “CHANGE SETT” on CONSULT-III screen is touched.
ANSWER BACK FUNCTION	Buzzer reminder function mode by Intelligent button can be changed to operate (ON) or not operate (OFF) with this mode. The operation mode will be changed when “CHANGE SETT” on CONSULT-III screen is touched.
SELECTIVE UNLOCK FUNCTION	Selective unlock function mode can be changed to operate (ON) or not operate (OFF) with this mode. The operation mode will be changed when “CHANGE SETT” on CONSULT-III screen is touched.
ANTI KEY LOCK IN FUNCTION	Key reminder function mode can be changed to operate (ON) or not operate (OFF) with this mode. The operation mode will be changed when “CHANGE SETT” on CONSULT-III screen is touched.
HORN WITH KEYLESS LOCK	Horn reminder function mode by Intelligent Key remote control button can be changed to operate (ON) or not operate (OFF) with this mode. The operation mode will be changed when “CHANGE SETT” on CONSULT-III screen is touched.
HAZARD ANSWER BACK	Hazard reminder function mode can be selected from the following with this mode. The operation mode will be changed when “CHANGE SETT” on CONSULT-III screen is touched. • LOCK ONLY: Door lock operation only • UNLOCK ONLY: Door unlock operation only • LOCK/UNLOCK: Lock/Unlock operation • OFF: Non-operation

Monitor item	Description
ANSWER BACK WITH I-KEY LOCK	Buzzer reminder function (lock operation) mode by door request switch (driver side, passenger side and back door side) can be selected from the following with this mode. The operation mode will be changed when “CHANGE SETT” on CONSULT-III screen is touched. • BUZZER: Sound buzzer • OFF: Non-operation
ANSWER BACK WITH I-KEY UNLOCK	Buzzer reminder function (unlock operation) mode by door request switch can be changed to operate (ON) or not operate (OFF) with this mode.
AUTO RELOCK TIMER	Auto door lock timer mode can select the following with this mode. • 1 minute • OFF: Non-operation
PANIC ALARM DELAY	Panic alarm button's pressing time on Intelligent Key remote control button can be selected from the following with this mode. The operation mode will be changed when “CHANGE SETT” on CONSULT-III screen is touched. • 0.5 second • 1.5 second • OFF: Non-operation
P/W DOWN DELAY	Unlock button's pressing time on Intelligent Key remote control button can be selected from the following with this mode. The operation mode will be changed when “CHANGE SETT” on CONSULT-III screen is touched. • 3 seconds • 5 seconds • OFF: Non-operation
ENGINE START BY I-KEY	Engine start function mode can be changed to operate (ON) or not operate (OFF) with this mode. The operation mode will be changed when “CHANGE SETT” on CONSULT-III screen is touched.
LOCK/UNLOCK BY I-KEY	Door lock/unlock function by door request switch (driver side, passenger side and back door side) mode can be changed to operate (ON) or not operate (OFF) with this mode. The operation mode will be changed when “CHANGE SETT” on CONSULT-III screen is touched.

Trouble Diagnosis Symptom Chart

INFOID:0000000001704012

KEY WARNING LAMP (GREEN) ILLUMINATES

NOTE:
- Before performing the diagnosis in the following table, check “Trouble Diagnosis Procedure”. Refer to BL-99, "Trouble Diagnosis Procedure".
- Make sure that vehicle is under the condition shown in “Conditions of vehicle” before starting diagnosis, and check each symptom.
- If the following “symptoms” are detected, check systems shown in the “Diagnoses/service procedure” column in this order.

Conditions of Vehicle (Operating Conditions)
- Intelligent Key is registered.
- Key is not inserted in ignition switch.
- One or more registered Intelligent Keys are in the vehicle.

Symptom	Diagnosis/service procedure	Reference page
Ignition switch does not turn on with Intelligent Key. [KEY warning lamp (green) illuminates].	1. Check steering lock solenoid.	BL-131
	2. Replace Intelligent Key unit.	BL-142

KEY WARNING LAMP (RED) ILLUMINATES

NOTE:
- Before performing the diagnosis in the following table, check “Trouble Diagnosis Procedure”. Refer to BL-99, "Trouble Diagnosis Procedure".
- Make sure that vehicle is under the condition shown in “Conditions of vehicle” before starting diagnosis, and check each symptom.
- If the following “symptoms” are detected, check systems shown in the “Diagnoses/service procedure” column in this order.

Conditions of Vehicle (Operating Conditions)
- Intelligent Key is registered.

- Key is not inserted in ignition switch.
- One or more registered Intelligent Keys are in the vehicle.

Symptom	Diagnosis/service procedure	Reference page
Ignition switch does not turn on with Intelligent Key. [KEY warning lamp (red) illuminates].	1. Check inside key antenna.	BL-129
	2. Replace Intelligent Key unit.	BL-142

KEY WARNING LAMP DOES NOT ILLUMINATE

NOTE:

- Before performing the diagnosis in the following table, check “Trouble Diagnosis Procedure”. Refer to BL-99, "Trouble Diagnosis Procedure".
- Make sure that vehicle is under the condition shown in “Conditions of vehicle” before starting diagnosis, and check each symptom.
- If the following “symptoms” are detected, check systems shown in the “Diagnoses/service procedure” column in this order.
- Check if ignition switch turns using mechanical key. If it turns, check if “ENGINE START BY I-KEY” in “WORK SUPPORT” mode is ON.

Conditions of Vehicle (Operating Conditions)

- Intelligent Key is registered.
- Mechanical key is out of ignition switch.
- One or more registered Intelligent Keys are in the vehicle.

Symptom	Diagnosis/service procedure	Reference page
Ignition switch does not turn on with Intelligent Key. [GREEN key warning lamp does not illuminate].	1. Check Intelligent Key unit power supply and ground circuit.	BL-110
	2. Check ignition knob switch.	BL-113
	3. Check key switch.	BL-110
	4. Check "KEY" warning lamp (GREEN).	BL-139
	5. Replace Intelligent Key unit.	BL-142
RED key warning lamp does not illuminate [Without Intelligent Key].	1. Check "KEY" warning lamp (RED).	BL-139
	2. Replace Intelligent Key unit.	BL-142

NON-DTC ITEM

NOTE:

- Before performing the diagnosis in the following table, check “Trouble Diagnosis Procedure”. Refer to BL-99, "Trouble Diagnosis Procedure".
- Make sure that vehicle is under the condition shown in “Conditions of vehicle” before starting diagnosis, and check each symptom.
- If the following “symptoms” are detected, check systems shown in the “Diagnoses/service procedure” column in this order.

Conditions of Vehicle (Operating Conditions)

- Intelligent Key is registered.
- Multiple mechanical keys are not set in a keyfob.
  (If mechanical keys are near the ignition switch, the operation may not work properly.)

Symptom	Diagnosis/service procedure	Reference page
Non DTC Item	1. Check key switch.	BL-110
	2. Check NATS antenna amp.	BL-210

ENGINE START CONDITION CHECK

NOTE:

- Before performing the diagnosis in the following table, check “Trouble Diagnosis Procedure”. Refer to BL-99, "Trouble Diagnosis Procedure".

- If the following “symptoms” are detected, check systems shown in the ”Diagnoses/service procedure” column in this order.

Symptom	Diagnosis/service procedure	Reference page
Engine start condition check	1. Check CVT device (park position switch). (With CVT)	BL-136
	2. Check key interlock solenoid (with M/T).	BL-133
	3. Check stop lamp switch (With CVT).	BL-134
	4. Check stop lamp switch (with M/T).	BL-135

ALL FUNCTIONS OF INTELLIGENT KEY SYSTEM DO NOT OPERATE

NOTE:

- Before performing the diagnosis in the following table, check “Trouble Diagnosis Procedure”. Refer to BL-99, "Trouble Diagnosis Procedure".
- Make sure that vehicle is under the condition shown in “Conditions of vehicle” before starting diagnosis, and check each symptom.
- If the following “symptoms” are detected, check systems shown in the “Diagnosis/service procedure” column in this order.

Conditions of Vehicle (Operating Conditions)

- “ENGINE START BY I-KEY” and “LOCK/UNLOCK BY I-KEY” are ON when setting on CONSULT-III.
- Mechanical key is out of ignition switch.
- Ignition switch is not depressed.
- All doors are closed.
- Intelligent key is registered.

Symptom	Diagnosis/service procedure	Reference page
All function of Intelligent Key system dose not operate.	1. Check Intelligent Key unit power supply and ground circuit.	BL-110
	2. Check Intelligent Key battery inspection.	BL-142
	3. Replace Intelligent Key unit.	BL-142

DOOR LOCK/UNLOCK FUNCTION MALFUNCTION

NOTE:

- Before performing the diagnosis in the following table, check “Trouble Diagnosis Procedure”. Refer to BL-99, "Trouble Diagnosis Procedure".
- Make sure that vehicle is under the condition shown in “Conditions of vehicle” before starting diagnosis, and check each symptom.
- If the following “symptoms” are detected, check systems shown in the “Diagnosis/procedure” column in this order.

Conditions of Vehicle (Operating Conditions)

- “LOCK/UNLOCK BY I-KEY” is ON when setting on CONSULT-III.
- Mechanical key is out of ignition switch.
- Ignition switch is not depressed.
- All doors are closed.
- Intelligent Key is registered.

Symptom	Diagnosis/service procedure	Reference page
Door lock/unlock does not operate by all request switches.	1. Check door switch (hatchback).	BL-114
	2. Check door switch (sedan).	BL-117
	3. Check key switch.	BL-110
	4. Check ignition knob switch.	BL-113
	5. Replace Intelligent Key unit.	BL-142

Symptom	Diagnosis/service procedure	Reference page
Door lock/unlock does not operate by request switch (driver side).	1. Check door request switch (driver side).	BL-118
	2. Check outside key antenna (driver side).	BL-126
	3. Replace Intelligent Key unit.	BL-142
Door lock/unlock does not operate by request switch (passenger side).	1. Check door request switch (passenger side).	BL-118
	2. Check outside key antenna (passenger side).	BL-126
	3. Replace Intelligent Key unit.	BL-142
Door lock/unlock does not operate by back door request switch (hatchback).	1. Check back door request switch.	BL-120
	2. Check outside key antenna (rear bumper).	BL-128
	3. Replace Intelligent Key unit.	BL-142
Door lock/unlock does not operate by trunk opener request switch (sedan).	1. Check trunk opener request switch.	BL-122
	2. Check outside key antenna (rear bumper).	BL-128
	3. Replace Intelligent Key unit.	BL-142
Auto lock function does not operate.	1. Check “AUTO RELOCK TIMER” setting in “WORK SUPPORT”.	BL-101
	2. Replace Intelligent Key unit.	BL-142
Key reminder function does not operate.	1. Check door switch (hatchback).	BL-114
	2. Check door switch (sedan).	BL-117
	3. Check inside key antenna.	BL-129
	4. Check unlock sensor.	BL-124
	5. Check Intelligent Key battery.	BL-142
	6. Replace Intelligent Key unit.	BL-142

REMOTE KEYLESS ENTRY FUNCTION MALFUNCTION

NOTE:

- Before performing the diagnosis in the following table, check “Trouble Diagnosis Procedure”. Refer to BL-99, "Trouble Diagnosis Procedure".
- Make sure that vehicle is under the condition shown in “Conditions of vehicle” before starting diagnosis, and check each symptom.
- If the following “symptoms” are detected, check systems shown in the “Diagnosis/service procedure” column in this order.

Conditions of Vehicle (Operating Conditions)

- Ignition switch is not depressed.
- All doors are closed.

Symptom	Diagnosis/service procedure	Reference page
All of the remote keyless entry functions do not operate.	1. Check Intelligent Key unit power supply and ground circuit.	BL-110
	2. Check key switch (BCM input).	BL-112
	3. Check Intelligent Key battery.	BL-142
	4. Remote Keyless Entry function inspection.	BL-142
	5. Replace Intelligent Key unit.	BL-142
Auto lock function does not operate.	1. Check “AUTO RELOCK TIMER” setting in “WORK SUPPORT”.	BL-101
	2. Replace Intelligent Key unit.	BL-142

Symptom	Diagnosis/service procedure	Reference page
Key reminder function does not operate.	1. Check door switch (hatchback).	BL-114
	2. Check door switch (sedan).	BL-117
	3. Check inside key antenna.	BL-129
	4. Check unlock sensor.	BL-124
	5. Check Intelligent Key battery.	BL-142
	6. Replace Intelligent Key unit.	BL-142
Panic alarm function does not operate.	1. Check “PANIC ALARM DELAY” setting in “WORK SUPPORT”.	BL-101
	2. Check Intelligent Key battery inspection.	BL-142
	3. Check horn function.	BL-140
	4. Check headlamp function.	BL-141
	5. Check key switch.	BL-110
	6. Check ignition knob switch.	BL-113
	7. Replace Intelligent Key unit.	BL-142

HAZARD AND BUZZER REMINDER FUNCTION MALFUNCTION

NOTE:

- Before performing the diagnosis in the following table, check “Trouble Diagnosis Procedure”. Refer to BL-99, "Trouble Diagnosis Procedure".
- Make sure that vehicle is under the condition shown in “Conditions of vehicle” before starting diagnosis, and check each symptom.
- If the following “symptoms” are detected, check systems shown in the “Diagnosis/service procedure” column in this order.

Conditions of Vehicle (Operating Conditions)

- Ignition switch is not depressed.
- All doors are closed.

Symptom		Diagnosis/service procedure	Reference page
Hazard reminder does not operate by request switch. (Buzzer reminder operate).		1. Check “HAZARD ANSWER BACK” setting in “WORK SUPPORT”.	BL-101
		2. Check hazard function with hazard switch.	BL-140
		3. Replace Intelligent Key unit.	BL-142
Buzzer reminder does not operate by request switch. (Hazard reminder operates).	Intelligent Key warning buzzer does not operate.	1. Check “ANSER BACK WITH I-KEY LOCK” or “ANSER BACK WITH I-KEY UNLOCK” setting in “WORK SUPPORT”.	BL-101
		2. Check Intelligent Key warning buzzer(s).	BL-125
		3. Replace Intelligent Key unit.	BL-142
Hazard reminder does not operate by Intelligent Key (door lock/unlock button). (Buzzer reminder operates properly).		1. Check “HAZARD ANSWER BACK” setting in “WORK SUPPORT”.	BL-101
		2. Check hazard function with hazard switch.	BL-140
		3. Replace Intelligent Key.	BL-142
Buzzer reminder does not operate by Intelligent Key (door lock/unlock button). (Hazard reminder operates).	Intelligent Key warning buzzer does not operate.	1. Check “HORN WITH KEYLESS LOCK” setting in “WORK SUPPORT”.	BL-101
		2. Check Intelligent Key warning buzzer(s).	BL-125
		3. Replace Intelligent Key unit.	BL-142

WARNING CHIME/BUZZER FUNCTION MALFUNCTION

NOTE:

- Before performing the diagnosis in the following table, check “Trouble Diagnosis Procedure”. Refer to BL-99, "Trouble Diagnosis Procedure".

- Make sure that vehicle is under the condition shown in “Conditions of vehicle” before starting diagnosis, and check each symptom.
- If the following “symptoms” are detected, check systems shown in the “Diagnosis/service procedure” column in this order.

Conditions of Vehicle (Operating Conditions)

Warning chime/buzzer functions operating condition is extremely complicated, during operating confirmations, reconfirm the list above twice in order to ensure proper operation.

Symptom		Diagnosis/service procedure	Reference page
Ignition switch warning chime does not operate.		1. Check ignition knob switch.	BL-113
		2. Check door switch (hatchback).	BL-114
		3. Check door switch (sedan).	BL-117
		4. Check key switch.	BL-110
		5. Check Intelligent Key warning chime.	BL-140
		6. Replace Intelligent Key unit.	BL-142
Ignition key warning chime does not operate. (When mechanical key used).		1. Check key switch (Intelligent Key unit input).	BL-110
		2. Check key switch (BCM input).	BL-112
		3. Check door switch (hatchback).	BL-114
		4. Check door switch (sedan).	BL-117
		5. Check Intelligent Key warning chime.	BL-140
		6. Replace Intelligent Key unit.	BL-142
OFF position warning chime (For internal) does not operate.		1. Check ignition switch position.	BL-134
		2. Check ignition knob switch.	BL-113
		3. Check key switch.	BL-110
		4. Check combination meter warning chime.	BL-140
		5. Replace Intelligent Key unit.	BL-142
OFF position warning chime/buzzer (for external) does not operate.	Both Intelligent Key warning chime and buzzer do not operate.	1. Check ignition switch position.	BL-134
		2. Check ignition knob switch.	BL-113
		3. Check key switch.	BL-110
		4. Check Intelligent Key warning chime.	BL-140
		5. Check Intelligent Key warning buzzer(s).	BL-125
		6. Replace Intelligent Key unit.	BL-142
	Intelligent Key warning buzzer does not operate.	Check Intelligent Key warning buzzer(s).	BL-125
Take away warning chime/buzzer (door open to close) does not operate.	Both Intelligent Key warning chime and buzzer do not operate.	1. Check door switch (hatchback).	BL-114
		2. Check door switch (sedan).	BL-117
		3. Check inside key antenna.	BL-129
		4. Check key switch.	BL-110
		5. Check Intelligent Key warning chime.	BL-125
		6. Check Intelligent Key warning buzzer(s).	BL-125
		7. Replace Intelligent Key unit.	BL-142
	Intelligent Key warning buzzer does not operate.	Check Intelligent Key warning buzzer(s).	BL-125

Symptom	Diagnosis/service procedure	Reference page
Take away warning chime (through window) does not operate.	1. Check “TAKE OUT FROM WINDOW WARN” setting in “WORK SUPPORT”.	BL-101
	2. Check inside key antenna.	BL-129
	3. Check key switch.	BL-110
	4. Check Intelligent Key battery.	BL-142
	5. Check Intelligent Key warning chime.	BL-140
	6. Replace Intelligent Key unit.	BL-142
Door lock operation warning buzzer does not operate.	1. Check door switch (hatchback).	BL-114
	2. Check door switch (sedan).	BL-117
	3. Check ignition knob switch.	BL-113
	4. Check door request switch.	BL-118
	5. Check back door request switch (hatchback).	BL-120
	6. Check trunk opener request switch (sedan).	BL-122
	7. Check outside key antenna (driver side and passenger side).	BL-126
	8. Check outside key antenna (rear bumper).	BL-128
	9. Check inside key antenna.	BL-129
	10. Check Intelligent Key warning buzzer(s).	BL-125
	11. Replace Intelligent Key unit.	BL-142
One warning buzzer does not operate (sedan).	Check Intelligent Key warning buzzer(s).	BL-125

WARNING LAMP FUNCTION MALFUNCTION

NOTE:

- Before performing the diagnosis in the following table, check “Trouble Diagnosis Procedure”. Refer to BL-99, "Trouble Diagnosis Procedure".
- If the following “symptoms” are detected, check systems shown in the “Diagnosis/service procedure” column in this order.

Symptom	Diagnosis/service procedure	Reference page
When Intelligent Key low battery warning operate, “KEY” warning lamp (green) does not illuminate.	1. Check “LOW BAT OF KEY FOB WARN” setting in “WORK SUPPORT”.	BL-101
	2. Check Intelligent Key battery.	BL-142
	3. Check KEY warning lamp (green).	BL-139
	4. Replace Intelligent Key unit.	BL-142
P position warning lamp does not illuminate properly. (With CVT)	1. Check CVT device (park position switch).	BL-136
	2. Check “P-SHIFT” warning lamp (red).	BL-138
	3. Replace Intelligent Key unit.	BL-142
LOCK warning lamp does not illuminate properly. (With M/T)	1. Check key interlock solenoid.	BL-133
	2. Check "LOCK" warning lamp.	BL-138
	3. Replace Intelligent Key unit.	BL-142
Take away warning lamp does not illuminate properly. (Take away warning chime is operated).	1. Check KEY warning lamp (red).	BL-142
	2. Replace Intelligent Key unit.	BL-142
Ignition switch warning lamp does not illuminate properly. (Ignition switch warning chime is operated).	1. Check KEY warning lamp (red).	BL-139
	2. Replace Intelligent Key unit.	BL-142

CAN Communication System Inspection

INFOID:0000000001704013

1. CHECK SELF-DIAGNOSTIC RESULTS

With CONSULT-III
- Connect CONSULT-III, and turn ignition switch ON.
- Touch “INTELLIGENT KEY” on “SELECT SYSTEM” screen.
- Touch “SELF-DIAG RESULTS” on “SELECT DIAG MODE” screen.
- Check display content in self-diagnostic results.

CONSULT-III display item	DTC code
NO DTC IS DETECTED	—
CAN COMM	U1000
CAN COMM2	U1010

OK or NG

NO DTC IS DETECTED>> INSPECTION END
CAN COMM [U1000]>> After printing “SELF-DIAGNOSIS RESULTS”, go to “CAN SYSTEM”. Refer to LAN-15, "Trouble Diagnosis Flow Chart".
CAN COMM2 [U1010]>> Replace Intelligent Key unit.

Power Supply and Ground Circuit Inspection

INFOID:0000000001704014

1.CHECK POWER SUPPLY CIRCUIT

1. Turn ignition switch OFF.
2. Disconnect Intelligent Key unit connector.
3. Check voltage between Intelligent Key unit harness connector and ground.

Terminals			Voltage (V) (Approx.)
(+)		(–)	
Intelligent Key unit connector	Terminal		
M52	11	Ground	Battery voltage

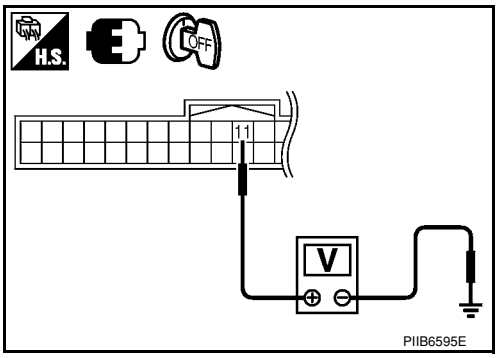

OK or NG

OK >> GO TO 2.
NG >> Repair or replace Intelligent Key power supply circuit.

2.CHECK GROUND CIRCUIT

Check continuity between Intelligent Key unit harness connector and ground.

Intelligent Key unit connector	Terminal	Ground	Continuity
M52	12		Yes

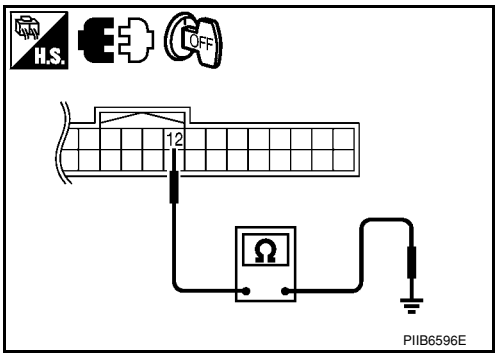

OK or NG

OK >> Power supply and ground circuits are OK.
NG >> Repair or replace the Intelligent Key unit ground circuit.

Key Switch (Intelligent Key Unit Input) Check

INFOID:0000000001704015

1.CHECK KEY SWITCH INPUT SIGNAL

With CONSULT-III
Check key switch (“KEY SW”) in “DATA MONITOR” mode with CONSULT-III.

Monitor item	Condition
KEY SW	Insert mechanical key into ignition switch: ON
	Remove mechanical key from ignition switch: OFF

Without CONSULT-III

1. Turn ignition switch OFF.
2. Disconnect Intelligent Key unit connector.
3. Check voltage between Intelligent Key unit and ground.

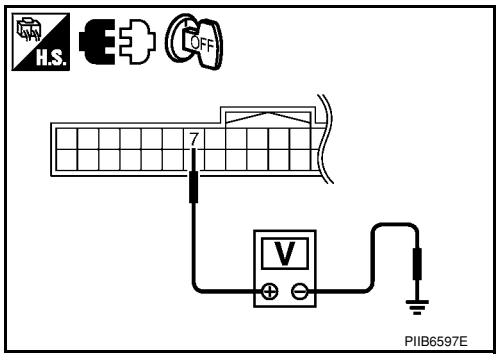

Terminals			Condition of key switch	Voltage (V) (Approx.)
(+)		(–)		
Intelligent Key unit connector	Terminal			
M52	7	Ground	Insert mechanical key into ignition switch	Battery voltage
			Remove mechanical key from ignition switch	0

OK or NG

OK >> Key switch circuit is OK.
NG >> GO TO 2.

2. CHECK KEY SWITCH POWER SUPPLY CIRCUIT

1. Remove mechanical key from ignition switch.
2. Disconnect key switch and ignition knob switch connector.
3. Check voltage between key switch and ignition knob switch and ground.

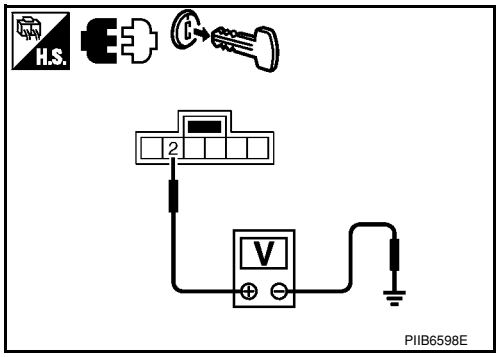

Terminals			Voltage (V) (Approx.)
(+)		(–)	
Key switch and ignition knob switch connector	Terminal		
M73	2	Ground	Battery voltage

OK or NG

OK >> GO TO 3.
NG >> Repair or replace key switch and ignition knob switch power supply circuit.

3. CHECK KEY SWITCH

Check continuity of key switch and ignition knob switch.

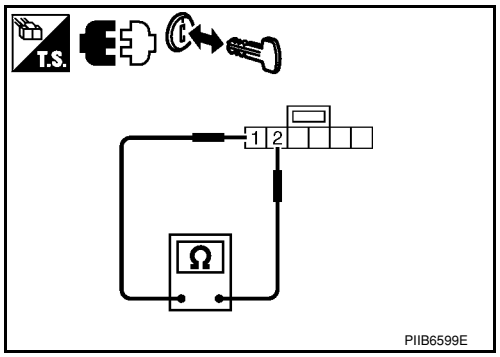

Terminal		Condition of key switch	Continuity
Key switch and ignition knob switch			
1	2	Insert mechanical key into ignition switch	Yes
		Remove mechanical key from ignition switch	No

OK or NG

OK >> GO TO 4.
NG >> Replace key cylinder assembly (built-in key switch).

4. CHECK KEY SWITCH CIRCUIT

1. Disconnect Intelligent Key unit connector.

2. Check continuity between Intelligent Key unit and key switch and ignition knob switch.

A		B		Continuity
Intelligent Key unit connector	Terminal	Key switch and ignition knob switch connector	Terminal	
M52	7	M73	1	Yes

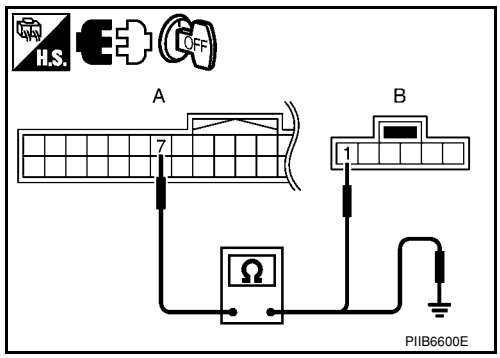

3. Check continuity between Intelligent Key unit and ground.

A		Ground	Continuity
Intelligent Key unit connector	Terminal		
M52	7		No

OK or NG

OK >> Check the condition of harness and harness connector.
NG >> Repair or replace harness between Intelligent Key unit and key switch and ignition knob switch.

Key Switch (BCM Input) Check

INFOID:0000000001704016

1. CHECK KEY SWITCH POWER SUPPLY CIRCUIT

1. Remove mechanical key from ignition switch.
2. Disconnect key switch and ignition knob switch connector.
3. Check voltage between key switch and ignition knob switch and ground.

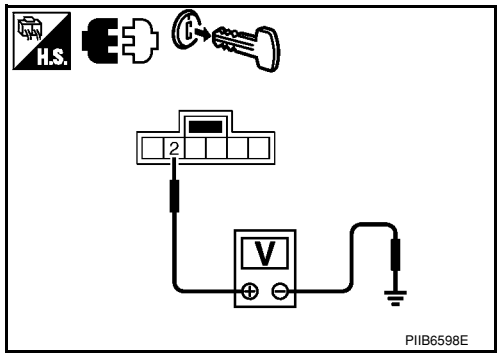

Terminals			Voltage (V) (Approx.)
(+)		(–)	
Key switch and ignition knob switch connector	Terminal		
M73	2	Ground	Battery voltage

OK or NG

OK >> GO TO 2.
NG >> Check harness between key switch and ignition knob switch and fuse.

2. CHECK KEY SWITCH OPERATION

Check continuity of key switch and ignition knob switch.

Terminal		Condition of key switch	Continuity
Key switch and ignition knob switch			
1	2	Insert mechanical key into ignition switch	Yes
		Remove mechanical key from ignition switch	No

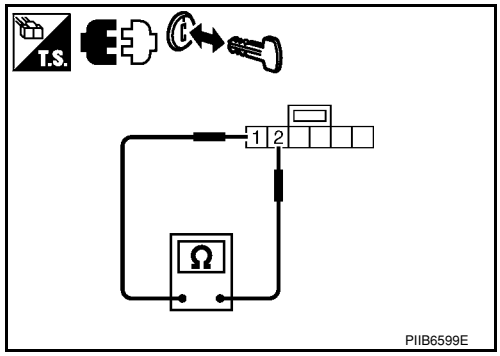

OK or NG

OK >> GO TO 3.
NG >> Replace key cylinder assembly (built-in key switch).

3. CHECK KEY SWITCH CIRCUIT

1. Disconnect BCM connector.
2. Check continuity between BCM connector (A) M18 terminal 37 and key switch and ignition knob switch connector (B) terminal 1.

A		B		Continuity
BCM connector	Terminal	Key switch and ignition knob switch connector	Terminal	
M18	37	M73	1	Yes

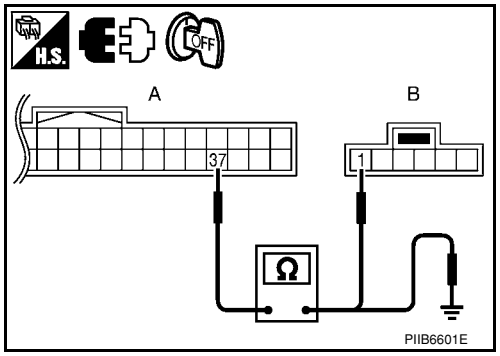

3. Check continuity between BCM connector (A) M18 terminal 37 and ground.

A		Ground	Continuity
BCM connector	Terminal		
M18	37		No

OK or NG

OK >> Key switch (BCM input) circuit is OK.
NG >> Repair or replace harness between key switch and ignition knob switch and BCM.

Ignition Knob Switch Check

INFOID:0000000001704017

1. CHECK IGNITION KNOB SWITCH INPUT SIGNAL

With CONSULT-III

Display “PUSH SW” on DATA MONITOR screen, and check if ON/OFF display is linked to ignition switch operation.

Monitor item	Condition
PUSH SW	Ignition switch is pressed: ON
	Ignition switch is released: OFF

Without CONSULT-III

1. Turn ignition switch OFF.
2. Disconnect Intelligent Key unit connector.
3. Check voltage between Intelligent Key unit and ground.

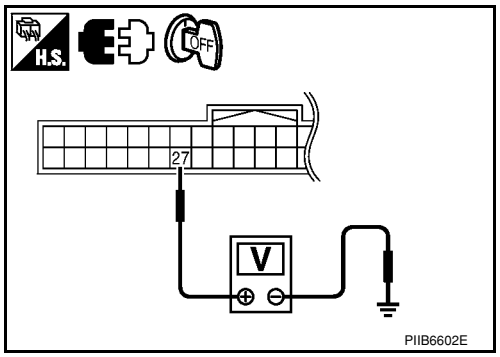

Terminals			Condition of key switch	Voltage (V) (Approx.)
(+)		(–)		
Intelligent Key unit connector	Terminal			
M52	27	Ground	Ignition switch is pressed	Battery voltage
			Ignition switch is released	0

OK or NG

OK >> Ignition knob switch circuit is OK.
NG >> GO TO 2.

2. CHECK IGNITION KNOB SWITCH POWER SUPPLY CIRCUIT

1. Turn ignition switch OFF.
2. Disconnect key switch and ignition knob switch connector.
3. Check voltage between key switch and ignition knob switch and ground.

Terminals			Voltage (V) (Approx.)
(+)		(–)	
Key switch and ignition knob switch connector	Terminal		
M73	4	Ground	Battery voltage

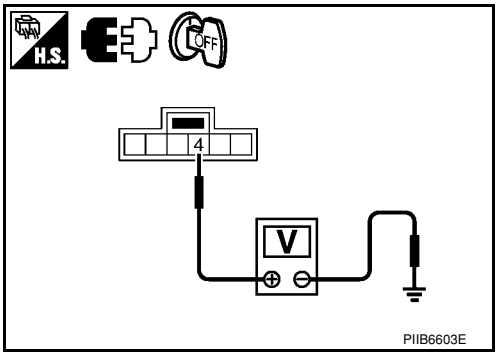

OK or NG

OK >> GO TO 3.
NG >> Repair or replace key switch and ignition knob switch power supply circuit.

3. CHECK IGNITION KNOB SWITCH

Check continuity of ignition knob switch.

Terminal		Condition of key switch	Continuity
Key switch and ignition knob switch			
3	4	Ignition switch is pressed	Yes
		Ignition switch is released	No

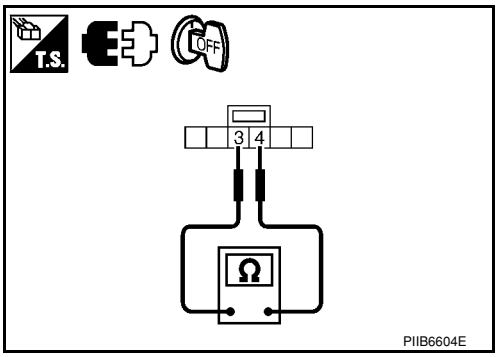

OK or NG

OK >> GO TO 4.
NG >> Replace key switch and ignition knob switch.

4. CHECK IGNITION KNOB SWITCH CIRCUIT

1. Disconnect Intelligent Key unit connector.
2. Check continuity between Intelligent Key unit connector (A) terminal 27 and key switch and ignition knob switch connector (B) terminal 3.

A		B		Continuity
Intelligent Key unit connector	Terminal	Key switch and ignition knob switch connector	Terminal	
M52	27	M73	3	Yes

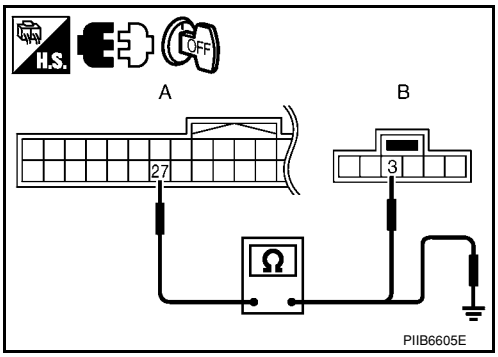

3. Check continuity between Intelligent Key unit connector (A) terminal 27 and ground.

A		Ground	Continuity
Intelligent Key unit connector	Terminal		
M52	27		No

OK or NG

OK >> Check the condition of harness and harness connector.
NG >> Repair or replace harness between Intelligent Key unit and key switch and ignition knob switch.

Door Switch Check (Hatchback)

INFOID:0000000001704018

1. CHECK DOOR SWITCHES INPUT SIGNAL

With CONSULT-III

Check door switches ("DOOR SW-DR", "DOOR SW-AS", "DOOR SW-RL", "DOOR SW-RR", "BACK DOOR SW") in DATA MONITOR mode with CONSULT–III. Refer to BL-36, "CONSULT-III Function (BCM)".

- When doors are open:

DOOR SW-DR : ON
DOOR SW-AS : ON
DOOR SW-RL : ON
DOOR SW-RR : ON
BACK DOOR SW : ON

- When doors are closed:

DOOR SW-DR : OFF
DOOR SW-AS : OFF
DOOR SW-RL : OFF
DOOR SW-RR : OFF
BACK DOOR SW : OFF

Without CONSULT-III

Check voltage between BCM connector M18 or M19 terminals 12, 13, 43, 47, 48 and ground.

Connector	Item	Terminals (+)	Terminals (–)	Condition	Voltage (V) (Approx.)
M18	Front door switch RH	12	Ground	Open ↓ Closed	0 ↓ Battery voltage
	Rear door switch RH	13			
M19	Back door switch	43			
	Front door switch LH	47			
	Rear door switch LH	48			

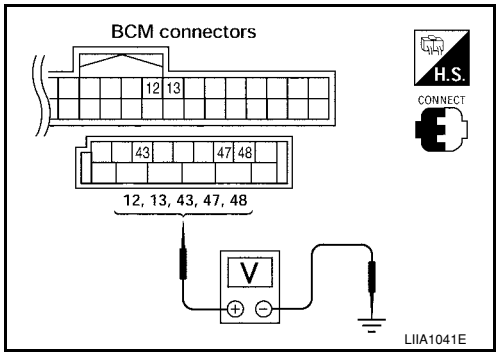

OK or NG

OK >> Door switch circuit is OK.
NG >> GO TO 2.

2. CHECK DOOR SWITCH CIRCUIT

1. Turn ignition switch OFF.
2. Disconnect door switch and BCM.
3. Check continuity between door switch connector (B) B8 (front LH), B108 (front RH) terminal 2 or (C) B6 (rear LH), B116 (rear RH) terminal 1 or back door lock assembly connector (D) D405 terminal 3 and BCM connectors (A) M18, M19 terminals 12, 13, 43, 47 and 48.

1 - 13	**: Continuity should exist.**
1 - 48	**: Continuity should exist.**
2 - 12	**: Continuity should exist.**
2 - 47	**: Continuity should exist.**
3 - 43	**: Continuity should exist.**

4. Check continuity between door switch connector (B) B8 (front LH), B108 (front RH) terminal 2 or (C) B6 (rear LH), B116 (rear RH) terminal 1 or back door lock assembly connector (D) D405 terminal 3 and ground.

1 - Ground	**: Continuity should not exist.**
2 - Ground	**: Continuity should not exist.**
3 - Ground	**: Continuity should not exist.**

OK or NG

OK >> GO TO 3.
NG >> Repair or replace harness.

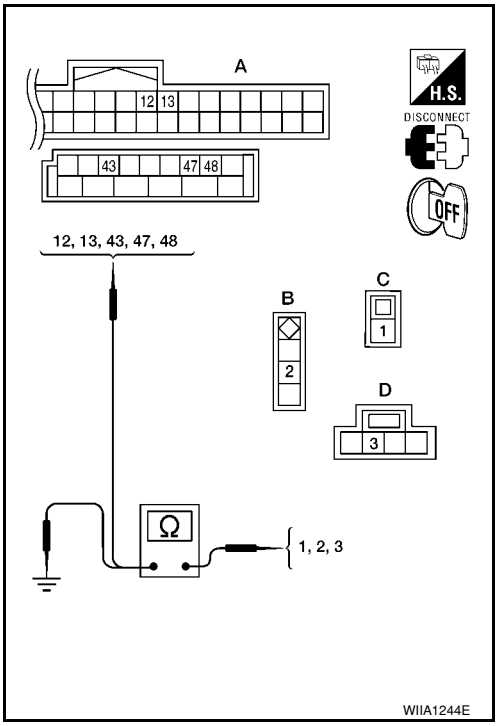

3. CHECK DOOR SWITCHES

FRONT AND REAR DOORS

Check continuity between front door switch terminal 2 or rear door switch terminal 1 and exposed metal of switch while pressing and releasing switch.

Door switch is released	**: Continuity should exist.**
Door switch is pushed	**: Continuity should not exist.**

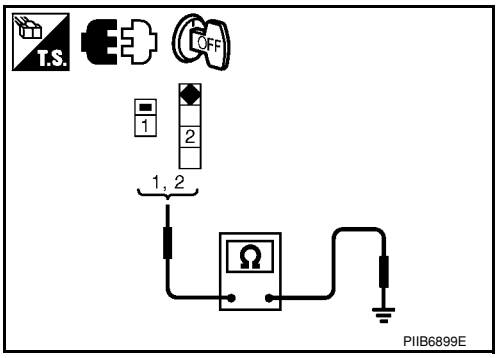

BACK DOOR

Check continuity between back door lock assembly connector (back door switch) terminals 3 and 4 while pressing (closing back door) and releasing (opening back door) switch.

When back door is open	**: Continuity should exist.**
When back door is closed	**: Continuity should not exist.**

OK or NG

OK1 >> (Front and rear doors) Switch circuit is OK.
OK2 >> (Back door) GO TO 4.
NG >> Replace door switch.

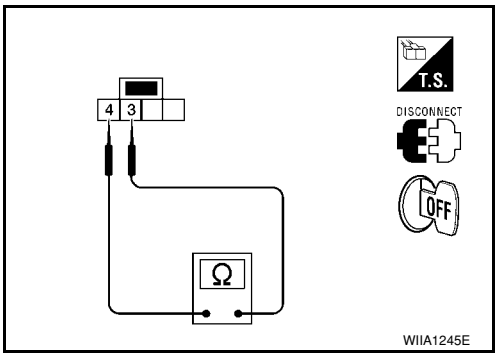

4. CHECK BACK DOOR SWITCH GROUND

Check continuity between back door lock assembly connector D405 terminal 4 and ground.

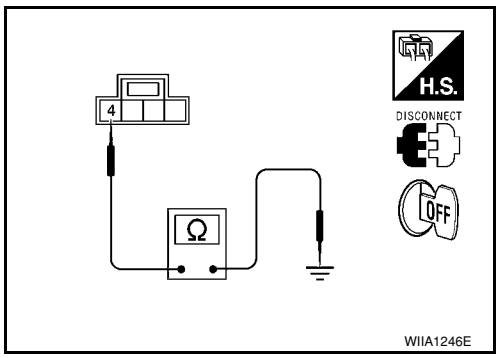

4 - Ground : Continuity should exist.

OK or NG

OK >> GO TO 5.
NG >> Repair or replace harness.

5. CHECK BACK DOOR SWITCH SIGNAL FOR SHORT

1. Disconnect Intelligent Key unit.
2. Check continuity between BCM connector M18 terminal 30 and ground.

30 - Ground : Continuity should not exist.

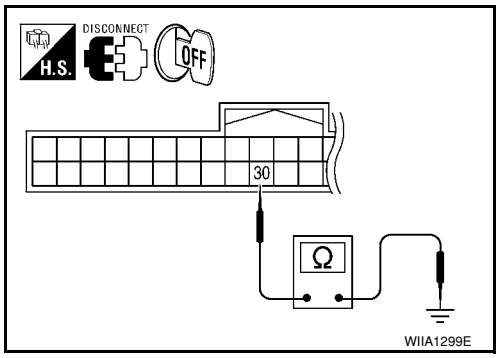

OK or NG

OK >> Back door switch circuit is OK.
NG >> Repair or replace harness.

Door Switch Check (Sedan)

INFOID:0000000001704019

1. CHECK DOOR SWITCHES INPUT SIGNAL

With CONSULT-III

Check door switches ("DOOR SW-DR", "DOOR SW-AS", "DOOR SW-RL", "DOOR SW-RR") in DATA MONITOR mode with CONSULT–III. Refer to BL-101, "CONSULT-III Application Item".

- When doors are open:

DOOR SW-DR : ON
DOOR SW-AS : ON
DOOR SW-RL : ON
DOOR SW-RR : ON

- When doors are closed:

DOOR SW-DR : OFF
DOOR SW-AS : OFF
DOOR SW-RL : OFF
DOOR SW-RR : OFF

Without CONSULT-III

Check voltage between BCM connector M18 or M19 terminals 12, 13, 47, 48 and ground.

Connector	Item	Terminals		Condition	Voltage (V) (Approx.)
		(+)	(–)		
M19	Front door switch LH	47	Ground	Open ↓ Closed	0 ↓ Battery voltage
	Rear door switch LH	48			
M18	Front door switch RH	12			
	Rear door switch RH	13			

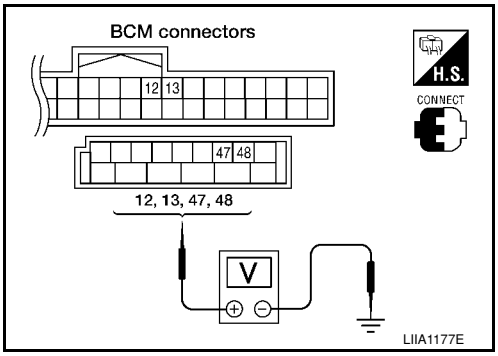

OK or NG

OK >> Door switch circuit is OK.
NG >> GO TO 2.

2. CHECK DOOR SWITCH CIRCUIT

1. Turn ignition switch OFF.
2. Disconnect door switch and BCM.
3. Check continuity between door switch connector B8 (Front LH) or B108 (Front RH) terminal 2, B6 (Rear LH) or B116 (Rear RH) terminal 1 and BCM connector M18, M19 terminals 12, 13, 47 and 48.

2 - 47 : Continuity should exist.
2 - 12 : Continuity should exist.
1 - 48 : Continuity should exist.
1 - 13 : Continuity should exist.

4. Check continuity between door switch connector B8 (Front LH) or B108 (Front RH) terminal 2, B6 (Rear LH) or B116 (Rear RH) terminal 1 and ground.

2 - Ground : Continuity should not exist.
1 - Ground : Continuity should not exist.

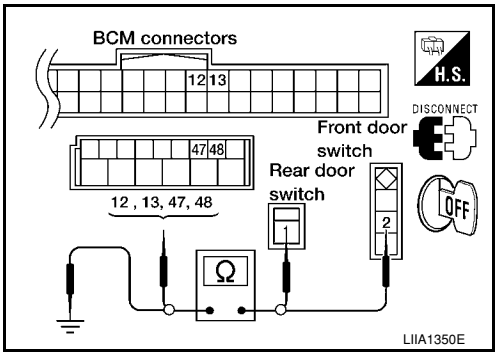

OK or NG

OK >> GO TO 3.
NG >> Repair or replace harness.

3. CHECK DOOR SWITCHES

Check continuity between door switch terminal and switch case ground.

Component	Terminals	Condition of switch	Continuity
Front door switch LH/RH	2 – Case ground	Pushed	No
		Released	Yes
Rear door switch LH/RH	1 – Case ground	Pushed	No
		Released	Yes

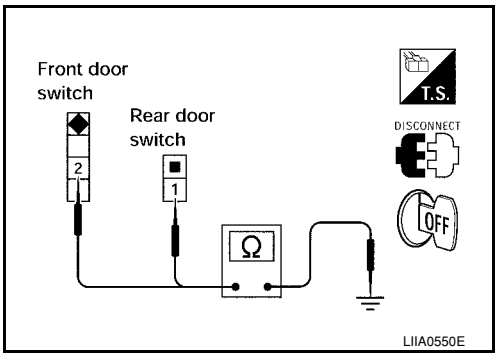

OK or NG

OK >> Check door switch case ground condition.
NG >> Replace door switch.

Door Request Switch Check

INFOID:0000000001704020

1. CHECK DOOR REQUEST SWITCH

With CONSULT-III

Check door request switch (“DR REQ SW” or “AS REQ SW”) in “DATA MONITOR” mode.

Monitor item	Condition
DR REQ SW AS REQ SW	Door request switch is pressed: ON
	Door request switch is released: OFF

Without CONSULT-III

1. Turn ignition switch OFF.
2. Check voltage between Intelligent Key unit harness connector and ground.

Terminals				Door request switch Condition	Voltage (V) (Approx.)
(+)			(–)		
Intelligent Key unit connector		Terminal			
M52	Front door request switch LH	5	Ground	Pressed	0
				Released	5
	Front door request switch RH	25		Pressed	0
				Released	5

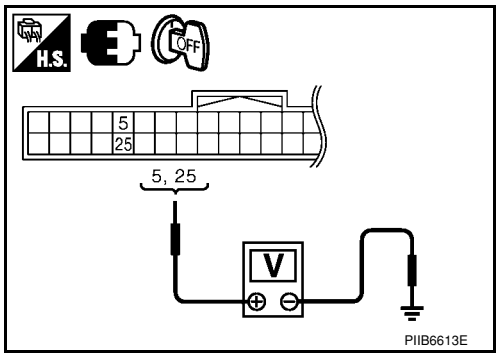

OK or NG

OK >> Door request switch circuit is OK.
NG >> GO TO 2.

2. CHECK DOOR REQUEST SWITCH CIRCUIT

1. Turn ignition switch OFF.
2. Disconnect Intelligent Key unit and front door request switch connector.
3. Check continuity between Intelligent Key unit connector and front door request switch connector.

A		B			Continuity
Intelligent Key unit connector	Terminal	Front door request switch connector		Terminal	
M52	5	LH	D5	1	Yes
	25	RH	D103		

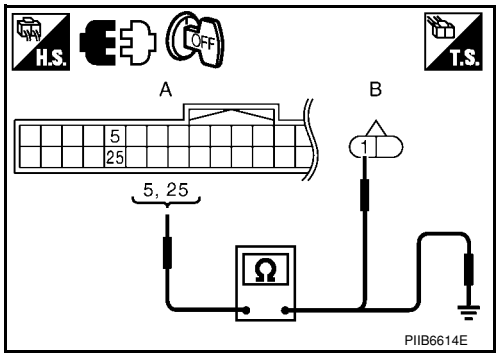

4. Check continuity between Intelligent Key unit connector and ground.

A		Ground	Continuity
Intelligent Key unit connector	Terminal		
M52	5		No
	25		

OK or NG

OK >> GO TO 3.
NG >> Repair or replace harness between Intelligent Key unit and front door request switch.

3. CHECK DOOR REQUEST SWITCH OPERATION

Check front door request switch.

Terminal		Door request switch condition	Continuity
Front outside handle			
1	2	Pressed	Yes
		Released	No

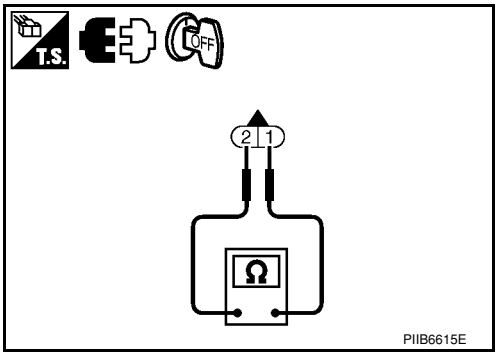

OK or NG

OK >> GO TO 4.
NG >> Replace front door request switch.

4. CHECK DOOR REQUEST SWITCH GROUND CIRCUIT

Check continuity between front door request switch connector and ground.

Front outside handle connector		Terminal	Ground	Continuity
Driver side	D5	2		Yes
Passenger side	D103			

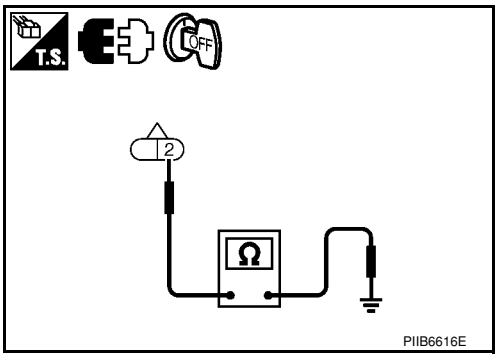

OK or NG

OK >> GO TO 5.
NG >> Repair or replace front door request switch ground circuit.

5. CHECK INTELLIGENT KEY UNIT OUTPUT SIGNAL

1. Connect Intelligent Key unit connector.
2. Check voltage between Intelligent Key unit connector and ground.

Terminals			Voltage (V) (Approx.)
(+)		(–)	
Intelligent Key unit connector	Terminal		
M52	5	Ground	5
	25		

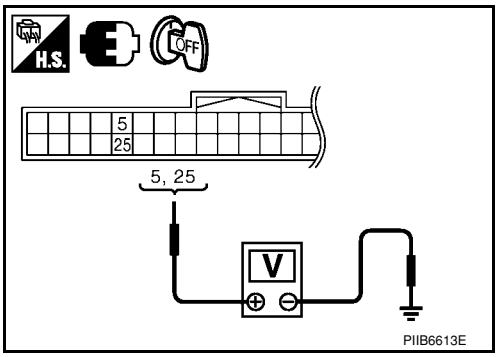

OK or NG

OK >> Check the condition of harness and connector.
NG >> Replace Intelligent Key unit. Refer to BL-142, "Removal and Installation of Intelligent Key Unit".

Back Door Request Switch Check (Hatchback)

INFOID:0000000001704021

1. CHECK BACK DOOR REQUEST SWITCH

With CONSULT-III

Check back door request switch (“BD/TR REQ SW”) in “DATA MONITOR” mode.

Monitor item	Condition
BD/TR REQ SW	Back door request switch is pressed: ON
	Back door request switch is released: OFF

Without CONSULT-III

1. Turn ignition switch OFF.
2. Check voltage between Intelligent Key unit connector and ground.

Terminals			Back door request switch condition	Voltage (V) (Approx.)
(+)		(–)		
Intelligent Key unit connector	Terminal			
M52	29	Ground	Pressed	0
			Released	5

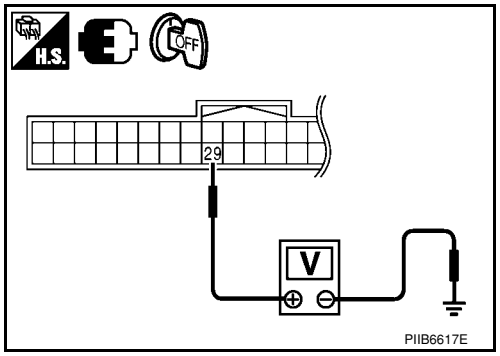

OK or NG

OK >> Back door request switch circuit is OK.
NG >> GO TO 2.

2. CHECK BACK DOOR REQUEST SWITCH CIRCUIT

1. Turn ignition switch OFF.
2. Disconnect Intelligent Key unit and back door request switch connector.
3. Check continuity between Intelligent Key unit connector (A) M52 terminal 29 and back door request switch connector (B) D406 terminal 1.

A		B		Continuity
Intelligent Key unit connector	Terminal	back door request switch connector	Terminal	
M52	29	D406	1	Yes

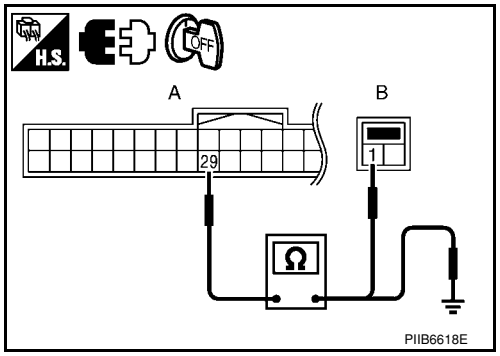

4. Check continuity between Intelligent Key unit connector (A) M52 terminal 29 and ground.

A		Ground	Continuity
Intelligent Key unit connector	Terminal		
M52	29		No

OK or NG

OK >> GO TO 3.
NG >> Repair or replace harness between Intelligent Key unit and back door request switch.

3. CHECK BACK DOOR REQUEST SWITCH OPERATION

Check continuity of back door request switch.

Terminal		Back door request switch condition	Continuity
Back door request switch			
1	2	Pressed	Yes
		Released	No

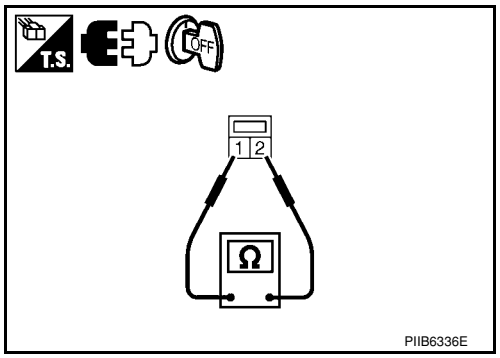

OK or NG

OK >> GO TO 4.
NG >> Replace back door request switch.

4. CHECK BACK DOOR REQUEST SWITCH GROUND CIRCUIT

Check continuity between back door request switch connector D406 terminal 2 and ground.

Back door request switch connector	Terminal	Ground	Continuity
D406	2		Yes

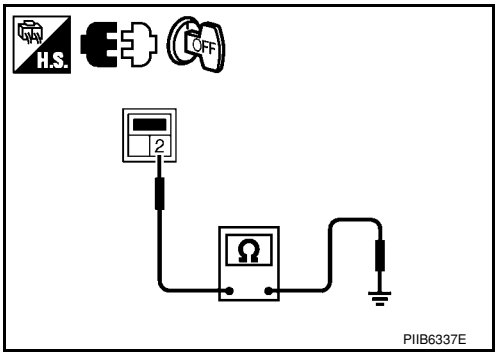

OK or NG

OK >> GO TO 5.
NG >> Repair or replace back door request switch ground circuit.

5. CHECK INTELLIGENT KEY UNIT OUTPUT SIGNAL

1. Connect Intelligent Key unit connector.
2. Check voltage between Intelligent Key unit connector M52 terminal 29 and ground.

Terminals			Voltage (V) (Approx.)
(+)		(–)	
Intelligent Key unit connector	Terminal		
M52	29	Ground	5

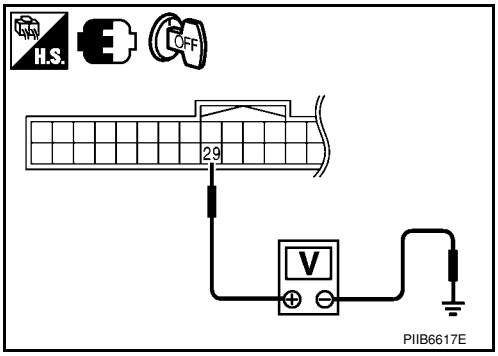

OK or NG

OK >> Check the condition of harness and connector.
NG >> Replace Intelligent Key unit. Refer to BL-142, "Removal and Installation of Intelligent Key Unit".

Trunk Opener Request Switch Check (Sedan)

INFOID:0000000001704022

1. CHECK TRUNK OPENER REQUEST SWITCH

With CONSULT-III

Check trunk opener request switch (“BD/TR REQ SW”) in “DATA MONITOR” mode.

Monitor item	Condition
BD/TR REQ SW	Trunk opener request switch is pressed: ON
	Trunk opener request switch is released: OFF

Without CONSULT-III

1. Turn ignition switch OFF.
2. Check voltage between Intelligent Key unit connector and ground.

Terminals			Trunk opener request switch condition	Voltage (V) (Approx.)
(+)		(–)		
Intelligent Key unit connector	Terminal			
M52	29	Ground	Pressed	0
			Released	5

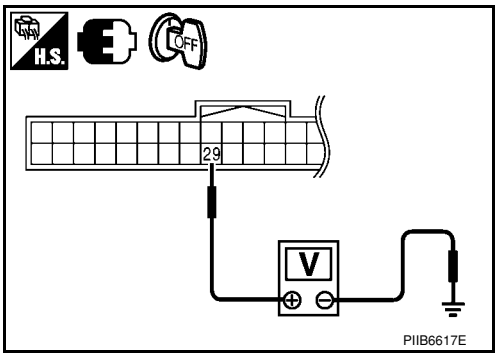

OK or NG

OK >> Trunk opener request switch circuit is OK.
NG >> GO TO 2.

2. CHECK TRUNK OPENER REQUEST SWITCH CIRCUIT

1. Turn ignition switch OFF.
2. Disconnect Intelligent Key unit and trunk opener request switch connector.

3. Check continuity between Intelligent Key unit connector (A) M52 terminal 29 and trunk opener request switch connector (B) B129 terminal 1.

A		B		Continuity
Intelligent Key unit connector	Terminal	Trunk opener request switch connector	Terminal	
M52	29	B129	1	Yes

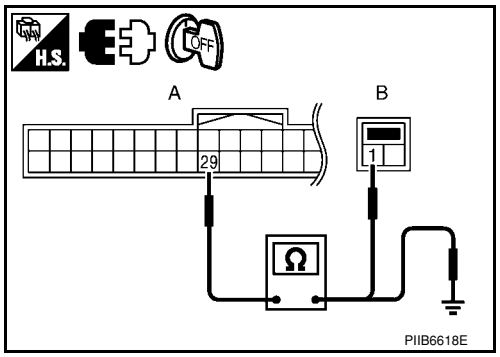

4. Check continuity between Intelligent Key unit connector (A) M52 terminal 29 and ground.

A		Ground	Continuity
Intelligent Key unit connector	Terminal		
M52	29		No

OK or NG

OK >> GO TO 3.
NG >> Repair or replace harness between Intelligent Key unit and trunk opener request switch.

3. CHECK TRUNK OPENER REQUEST SWITCH OPERATION

Check continuity of trunk opener request switch.

Terminal		trunk opener request switch condition	Continuity
trunk opener request switch			
1	2	Pressed	Yes
		Released	No

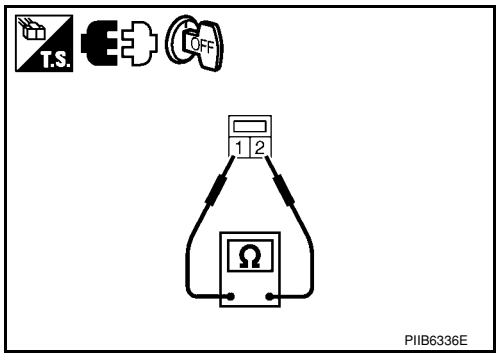

OK or NG

OK >> GO TO 4.
NG >> Replace trunk opener request switch.

4. CHECK TRUNK OPENER REQUEST SWITCH GROUND CIRCUIT

Check continuity between trunk opener request switch connector B129 terminal 2 and ground.

Trunk opener request switch connector	Terminal	Ground	Continuity
B129	2		Yes

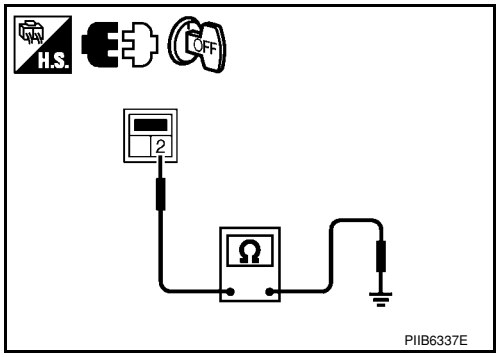

OK or NG

OK >> GO TO 5.
NG >> Repair or replace trunk opener request switch ground circuit.

5. CHECK INTELLIGENT KEY UNIT OUTPUT SIGNAL

1. Connect Intelligent Key unit connector.
2. Check voltage between Intelligent Key unit connector M52 terminal 29 and ground.

Terminals			Voltage (V) (Approx.)
(+)		(–)	
Intelligent Key unit connector	Terminal		
M52	29	Ground	5

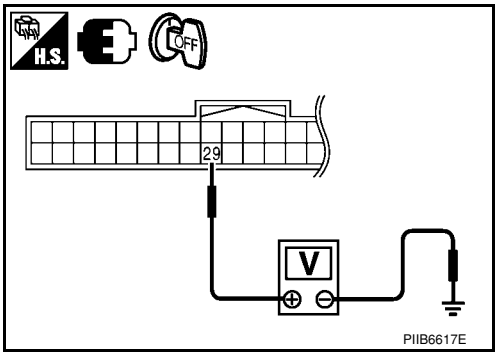

OK or NG

OK >> Check the condition of harness and connector.
NG >> Replace Intelligent Key unit. Refer to BL-142, "Removal and Installation of Intelligent Key Unit".

Unlock Sensor Check

INFOID:0000000001704023

1. CHECK UNLOCK SENSOR INPUT SIGNAL

Check voltage between Intelligent Key unit connector and ground.

Terminals			Front door lock (driver side) condition	Voltage (V) (Approx.)
(+)		(–)		
Intelligent Key unit connector	Terminal			
M52	28	Ground	Locked	5
			Unlocked	0

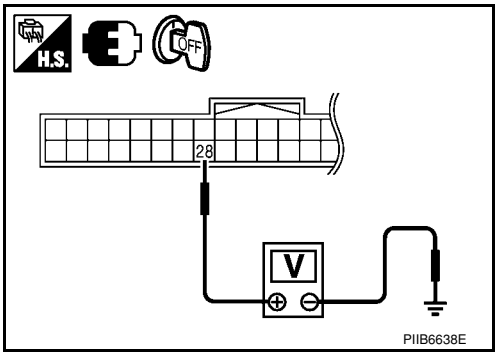

OK or NG

OK >> Unlock sensor circuit is OK.
NG >> GO TO 2.

2. CHECK UNLOCK SENSOR CIRCUIT

1. Turn ignition switch OFF.
2. Disconnect Intelligent Key unit and front door lock actuator LH (door unlock sensor) connector.
3. Check continuity between Intelligent Key unit connector (A) terminal 28 and front door lock actuator LH (door unlock sensor) connector (B) terminal 4.

A		B		Continuity
Intelligent Key unit connector	Terminal	Front door lock actuator LH (door unlock sensor) connector	Terminal	
M52	28	D3	4	Yes

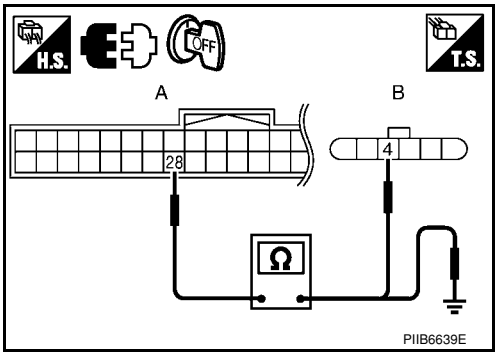

4. Check continuity between Intelligent Key unit connector and ground.

A		Ground	Continuity
Intelligent Key unit connector	Terminal		
M52	28		No

OK or NG

OK >> GO TO 3.
NG >> Repair or replace harness between Intelligent Key unit and front door lock actuator LH (door unlock sensor).

3. CHECK UNLOCK SENSOR OPERATION

Check unlock sensor.

Terminal		Driver side door condition	Continuity
Unlock sensor			
4	5	Lock	No
		Unlock	Yes

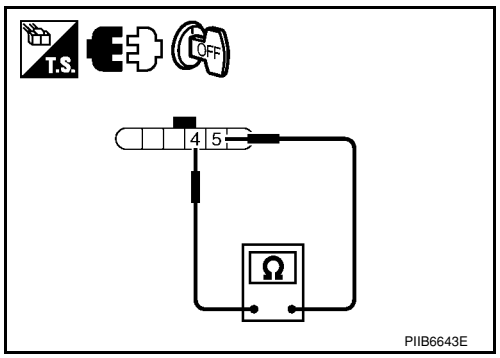

OK or NG

OK >> GO TO 4.
NG >> Replace unlock sensor.

4. CHECK UNLOCK SENSOR GROUND CIRCUIT

Check continuity between front door lock actuator LH (door unlock sensor) connector and ground.

Front door lock actuator LH (door unlock sensor) connector	Terminal	Ground	Continuity
D3	5		Yes

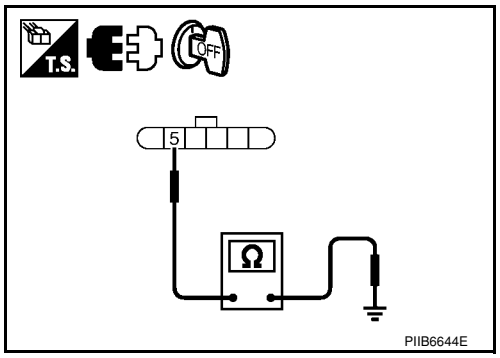

OK or NG

OK >> GO TO 5.
NG >> Repair or replace harness.

5. CHECK INTELLIGENT KEY UNIT OUTPUT SIGNAL

1. Connect Intelligent Key unit harness connector.
2. Check voltage between Intelligent Key unit connector and ground.

Terminals			Voltage (V) (Approx.)
(+)		(–)	
Intelligent Key unit connector	Terminal		
M52	28	Ground	5

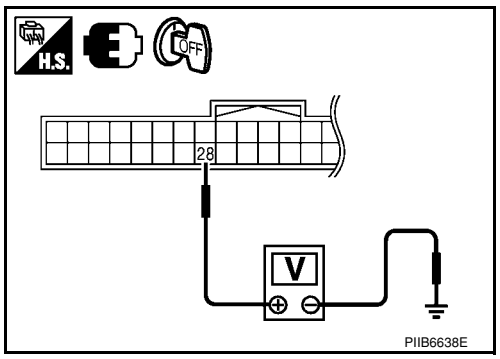

OK or NG

OK >> Replace front door lock actuator LH (door unlock sensor). Refer to BL-150, "Removal and Installation".
NG >> Replace Intelligent Key unit. Refer to BL-142, "Removal and Installation of Intelligent Key Unit".

Intelligent Key Warning Buzzer(s) Check

INFOID:0000000001704024

1. CHECK INTELLIGENT KEY WARNING BUZZER POWER SUPPLY CIRCUIT

1. Disconnect inoperative Intelligent Key warning buzzer connector.
2. Check voltage between Intelligent Key warning buzzer connector and ground.

Terminals				Voltage (V) (Approx.)
(+)			(–)	
Intelligent Key warning buzzer connector		Terminal		
Front door LH	D6	1	Ground	Battery voltage
Trunk (sedan)	B32			

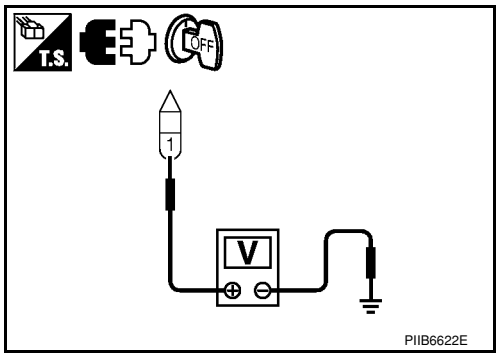

OK or NG

OK >> GO TO 2.

NG >> Repair or replace Intelligent Key warning buzzer power supply circuit.

2. CHECK INTELLIGENT KEY WARNING BUZZER CIRCUIT

1. Disconnect Intelligent Key unit connector.
2. Check continuity between Intelligent Key unit connector and inoperative Intelligent Key warning buzzer connector.

A		B			Continuity
Intelligent Key unit connector	Terminal	Intelligent Key warning buzzer connector		Terminal	
M52	4	Front door LH	D6	2	Yes
		Trunk (sedan)	B32		

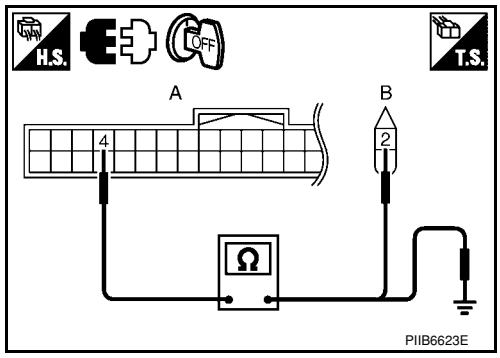

3. Check continuity between Intelligent Key unit connector and ground.

A		Ground	Continuity
Intelligent Key unit connector	Terminal		
M52	4		No

OK or NG

OK >> GO TO 3.
NG >> Repair or replace harness between Intelligent Key unit and Intelligent Key warning buzzer.

3. CHECK INTELLIGENT KEY WARNING BUZZER OPERATION

Connect battery power supply to Intelligent Key warning buzzer terminals 1 and 2, and check the operation.

1 (BAT+) - 2 (BAT-) : the buzzer sounds

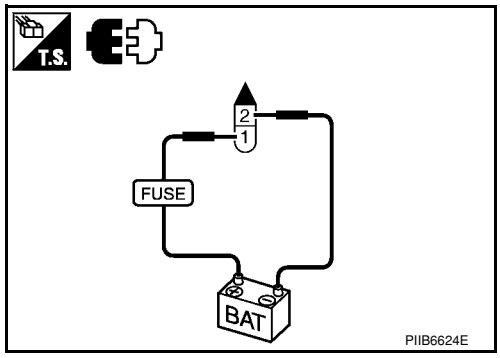

OK or NG

OK >> Intelligent Key warning buzzer is OK.
NG >> Replace inoperative Intelligent Key warning buzzer.

Outside Key Antenna (Driver Side and Passenger Side) Check

INFOID:0000000001704025

1. CHECK OUTSIDE KEY ANTENNA FUNCTION

With CONSULT-III

1. Check the operation with (“ANTENNA”) in the ACTIVE TEST.
2. Touch “DRIVER ANT” and “ASSIST ANT” on screen.
3. Carry the Intelligent Key into the antenna detection area.

Test item	Corresponding antenna
DRIVER ANT	Outside key antenna driver side
ASSIST ANT	Outside key antenna passenger side

Do the hazard lamps flash?

Yes >> Outside key antenna (driver side or passenger side) is OK.
No >> GO TO 2.

2. CHECK OUTSIDE KEY ANTENNA INPUT SIGNAL 1

1. Turn ignition switch OFF.
2. Check signal between Intelligent Key unit connector and ground with oscilloscope.

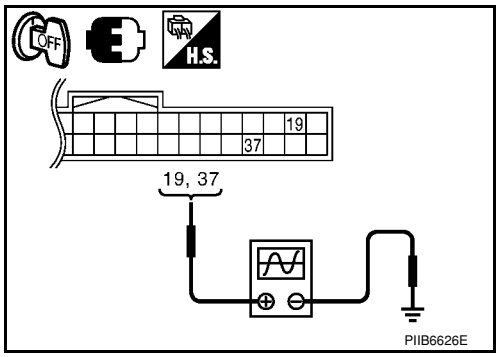

Terminals				Condition	Signal (Reference value.)
(+)			(–)		
Intelligent Key unit connector		Terminal			
M52	Driver side	19	Ground	Door request switch is pushed	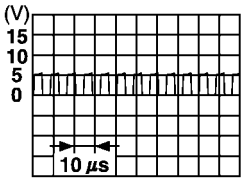
	Passenger side	37			

SIIA1910J

OK or NG

OK >> Outside key antenna is OK.
NG >> GO TO 3.

3. CHECK OUTSIDE KEY ANTENNA CIRCUIT

1. Disconnect Intelligent Key unit and outside key antenna connector.
2. Check continuity between Intelligent Key unit connector and outside key antenna connector.

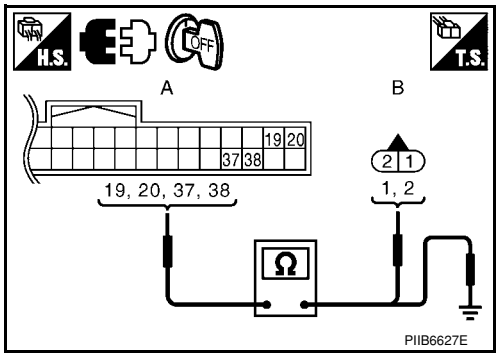

A		B		Continuity
Intelligent Key unit connector	Terminal	Outside key antenna connector	Terminal	
M52	19	D10	1	Yes
	20		2	
	37	D106	1	
	38		2	

3. Check continuity between Intelligent Key unit connector and ground.

A			Continuity
Intelligent Key unit connector	Terminal		
M52	19	Ground	No
	20		
	37		
	38		

OK or NG

OK >> GO TO 4.
NG >> Repair or replace harness between Intelligent Key unit and outside key antenna.

4. CHECK OUTSIDE KEY ANTENNA INPUT SIGNAL 2

1. Replace outside key antenna (New antenna or other antenna).
2. Connect Intelligent Key unit and outside key antenna connector.
3. Check signal between Intelligent Key unit connector and ground with oscilloscope.

Terminals				Condition	Signal (Reference value.)
(+)			(–)		
Intelligent Key unit connector		Terminal			
M52	Driver side	19	Ground	Door request switch is pushed	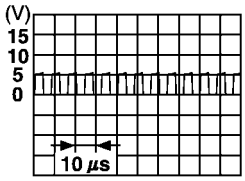
	Passenger side	37			

SIIA1910J

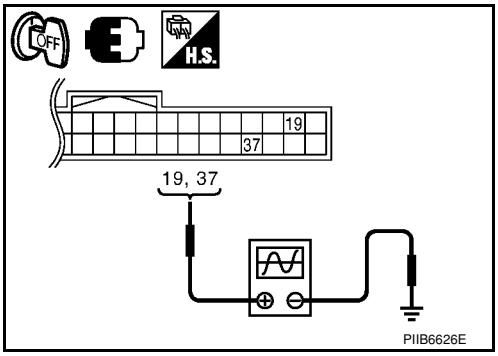

OK or NG

OK >> Replace malfunctioning outside key antenna.
NG >> Replace Intelligent Key unit. Refer to BL-142, "Removal and Installation of Intelligent Key Unit".

Outside Key Antenna (Rear Bumper) Check

INFOID:0000000001704026

1. CHECK REAR BUMPER ANTENNA FUNCTION

With CONSULT-III

1. Check the operation with (“ANTENNA”) in the ACTIVE TEST.
2. Touch “BD/TR ANT” on screen.
3. Carry the Intelligent Key into the antenna detection area.

Test item	Corresponding antenna
BK DOOR ANT	Rear bumper antenna

Do the hazard lamps flash?

Yes >> Rear bumper antenna is OK.
No >> GO TO 2.

2. CHECK REAR BUMPER ANTENNA INPUT SIGNAL 1

1. Turn ignition switch OFF.
2. Check signal between Intelligent Key unit connector and ground with oscilloscope.

Terminals			Condition	Signal (Reference value.)
(+)		(–)		
Intelligent Key unit connector	Terminal			
M52	17	Ground	Back door request switch is pushed	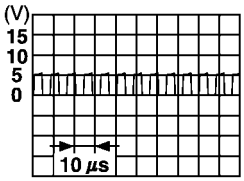

SIIA1910J

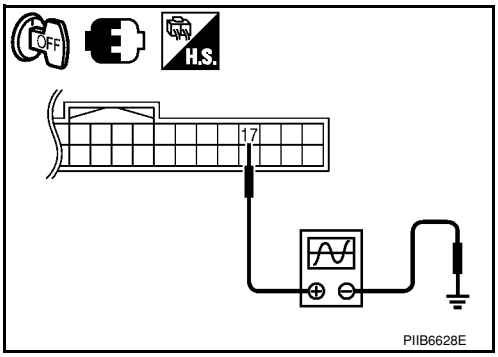

OK or NG

OK >> Rear bumper antenna is OK.
NG >> GO TO 3.

3. CHECK REAR BUMPER ANTENNA CIRCUIT

1. Disconnect Intelligent Key unit and rear bumper antenna connector.
2. Check continuity between Intelligent Key unit connector and rear bumper antenna connector.

A		B		Continuity
Intelligent Key unit connector	Terminal	Rear bumper antenna connector	Terminal	
M52	17	B2	1	Yes
	18		2	

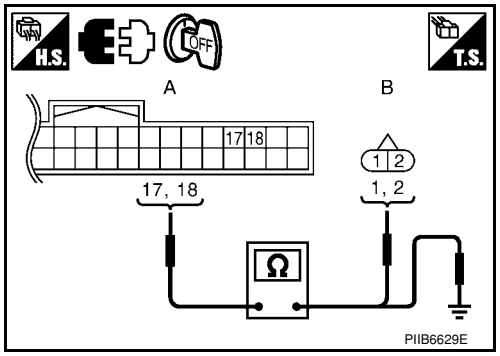

3. Check continuity between Intelligent Key unit connector and ground.

A		Ground	Continuity
Intelligent Key unit connector	Terminal		
M52	17		No
	18		

OK or NG

OK >> GO TO 4.
NG >> Repair or replace harness between Intelligent Key unit and rear bumper antenna.

4. CHECK REAR BUMPER ANTENNA INPUT SIGNAL 2

1. Replace rear bumper antenna (new antenna or other antenna).
2. Connect Intelligent Key unit and rear bumper antenna connector.
3. Check signal between Intelligent Key unit connector and ground with oscilloscope.

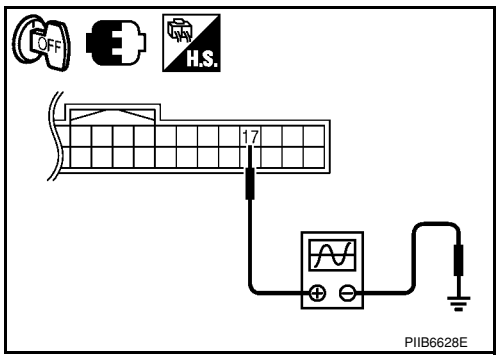

Terminals			Condition	Signal (Reference value.)
(+)		(–)		
Intelligent Key unit connector	Terminal			
M52	17	Ground	Back door request switch is pushed	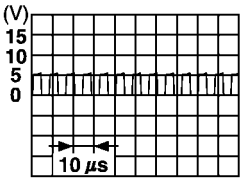 SIIA1910J

OK or NG

OK >> Replace rear bumper antenna.
NG >> Replace Intelligent Key unit. Refer to BL-142, "Removal and Installation of Intelligent Key Unit".

Inside Key Antenna Check

INFOID:0000000001704027

1. CHECK INSIDE KEY ANTENNA INPUT SIGNAL 1

1. Turn ignition switch OFF.
2. Check signal between Intelligent Key unit connector and ground with oscilloscope.

Terminals (+) Intelligent Key unit connector		Terminal	(–)	Condition	Signal (Reference value.)
M52	Instrument panel area	13	Ground	Any door is open → close	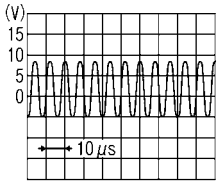
	Front console area	15			
	Rear floor area	33			

PIIB5502J

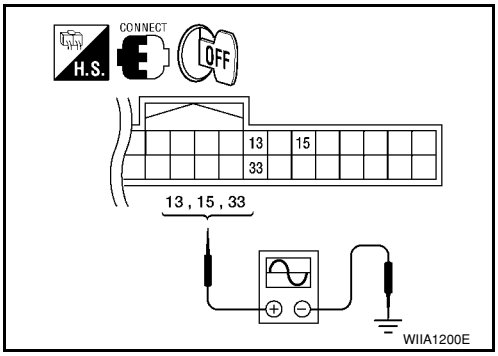

WIIA1200E

OK or NG

OK >> Check the condition of harness and connector.
NG >> GO TO 2.

2. CHECK INSIDE KEY ANTENNA CIRCUIT

1. Disconnect Intelligent Key unit and inside key antenna connector.
2. Check continuity between Intelligent Key unit connector and inside key antenna connector.

A Intelligent Key unit connector	Terminal	B Inside key antenna connector		Terminal	Continuity
M52	13	M10	Instrument panel	2	Yes
	14			1	
	15	B3	Front console	1	
	16			2	
	33	B12	Rear floor	1	
	34			2	

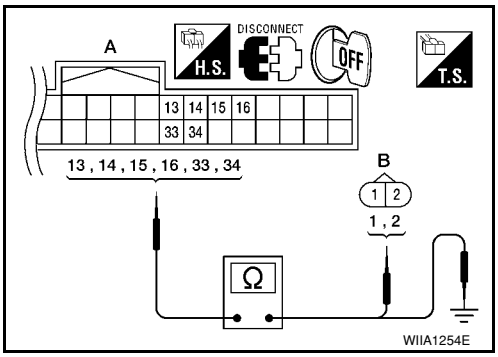

WIIA1254E

3. Check continuity between Intelligent Key unit connector and ground.

A Intelligent Key unit connector		Terminal	Ground	Continuity
M52	Instrument panel	13	Ground	No
		14		
	Front console	15		
		16		
	Rear floor	33		
		34		

OK or NG

OK >> GO TO 3.
NG >> Repair or replace harness between Intelligent Key unit and inside key antenna.

3. CHECK INSIDE KEY ANTENNA INPUT SIGNAL 2

1. Replace inside key antenna. (New antenna or other antenna)
2. Connect Intelligent Key unit and inside key antenna connector.
3. Check signal between Intelligent Key unit connector and ground with oscilloscope.

Terminals				Condition	Signal (Reference value.)
(+)			(–)		
Intelligent Key unit connector		Terminal			
M52	Instrument panel area	13	Ground	Any door is open → close	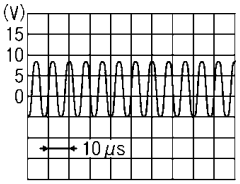 PIIB5502J
	Front console area	15			
	Rear floor area	33			

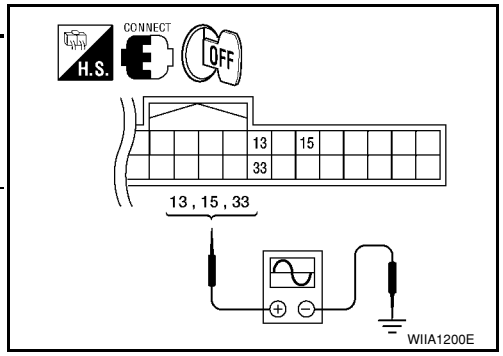

OK or NG

OK >> Replace malfunction inside key antenna.
NG >> Replace Intelligent Key unit.

Steering Lock Solenoid Check

INFOID:0000000001704028

1. CHECK STEERING LOCK SOLENOID POWER SUPPLY

1. Turn ignition switch OFF.
2. Disconnect steering lock solenoid connector.
3. Check voltage between steering lock solenoid and ground.

Terminals			Voltage (V) (Approx.)
(+)		(–)	
Steering lock solenoid	Terminal		
M6	1	Ground	Battery voltage

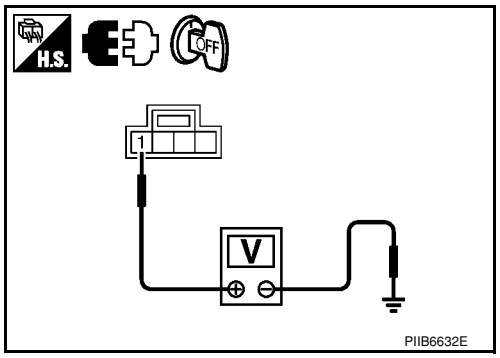

OK or NG

OK >> GO TO 2.
NG >> Repair or replace steering lock solenoid power supply circuit.

2. CHECK STEERING LOCK SOLENOID GROUND CIRCUIT

Check continuity between steering lock solenoid and ground.

Steering lock solenoid connector	Terminal	Ground	Continuity
M6	4		Yes

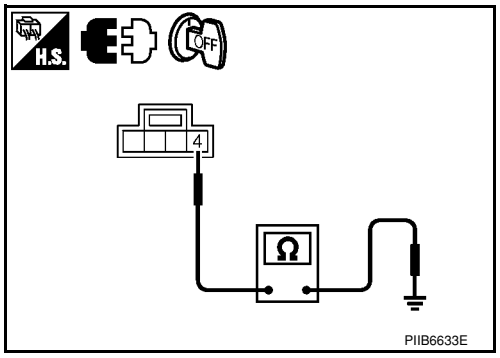

OK or NG

OK >> GO TO 3.
NG >> GO TO 6.

3. CHECK INTELLIGENT KEY UNIT OUTPUT SIGNAL

1. Connect steering lock solenoid connector.
2. Check voltage between Intelligent Key unit and ground.

Terminals			Voltage (V) (Approx.)
(+)		(–)	
Intelligent Key unit connector	Terminal		
M52	1	Ground	5

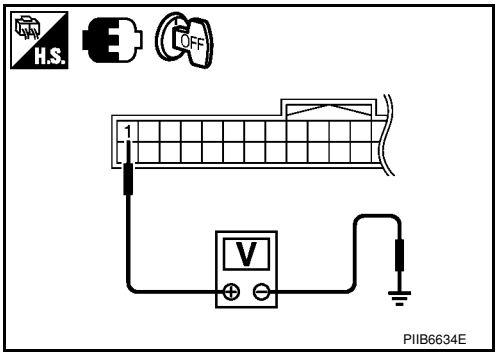

OK or NG

OK >> GO TO 4.
NG >> GO TO 6.

4. CHECK STEERING LOCK COMMUNICATION SIGNAL

Check signal between Intelligent Key unit and ground with oscilloscope.

Terminals			Condition of key switch	Voltage (V) (Approx.)
(+)		(–)		
Intelligent Key unit connector	Terminal			
M52	32	Ground	Ignition switch is pushed	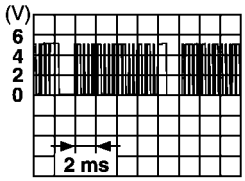

SIIA1911J

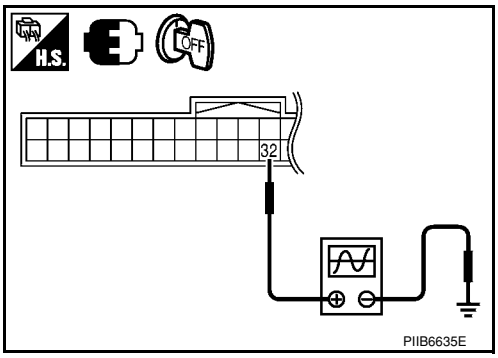

OK or NG

OK >> GO TO 5.
NG >> GO TO 6.

5. CHECK STEERING LOCK SOLENOID COMMUNICATION CIRCUIT FOR OPEN

1. Disconnect Intelligent Key unit and steering lock solenoid connectors.
2. Check continuity between steering lock solenoid and Intelligent Key unit.

A		B		Continuity
Steering lock solenoid connector	Terminal	Intelligent Key unit connector	Terminal	
M6	2	M52	1	Yes
	3		32	

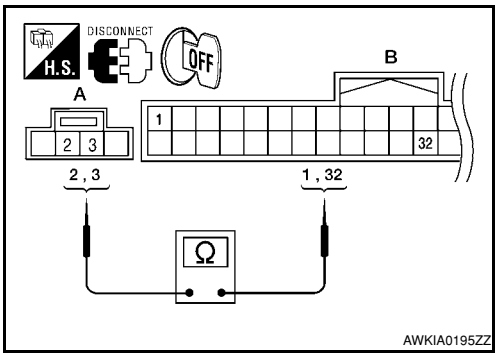

OK or NG

OK >> Replace steering lock solenoid.
NG >> Repair or replace harness between steering lock solenoid and Intelligent Key unit.

6. CHECK STEERING LOCK SOLENOID COMMUNICATION CIRCUIT FOR SHORT

1. Disconnect Intelligent Key unit and steering lock solenoid connectors.

2. Check continuity between steering lock solenoid connector and ground.

Steering lock solenoid connector	Terminal	Ground	Continuity
M6	2,3		No

OK or NG

OK >> Replace Intelligent Key unit. Refer to BL-142, "Removal and Installation of Intelligent Key Unit".

NG >> Repair or replace harness between steering lock solenoid and Intelligent Key unit.

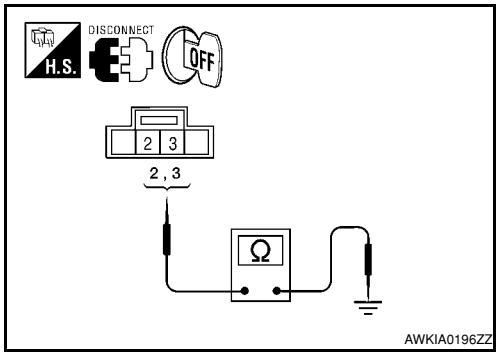

Key Interlock Solenoid (With M/T) Check

INFOID:0000000001704029

1. CHECK INTERLOCK SOLENOID POWER CIRCUIT

1. Turn ignition switch OFF.
2. Disconnect Intelligent Key unit and key switch and ignition knob switch connector.
3. Check continuity between Intelligent Key unit connector M52 (A) terminal 22 and key switch and ignition knob switch connector M73 (B) terminal 6.

A		B		Continuity
Intelligent Key unit connector	Terminal	Key switch and ignition knob switch connector	Terminal	
M52	22	M73	6	Yes

4. Check continuity between Intelligent Key unit connector (A) terminal 22 and ground.

A		Ground	Continuity
Intelligent Key unit connector	Terminal		
M52	22		No

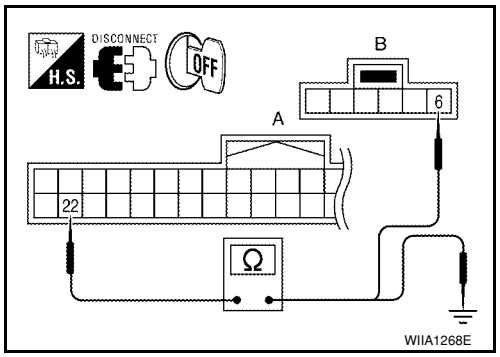

OK or NG

OK >> GO TO 2.

NG >> Repair or replace harness between Intelligent Key unit and key switch and ignition knob switch.

2. CHECK INTERLOCK SOLENOID GROUND CIRCUIT

Check continuity between key switch and ignition knob switch connector M73 terminal 5 and ground.

Key switch and ignition knob switch connector	Terminal	Ground	Continuity
M73	5		Yes

OK or NG

OK >> GO TO 3.

NG >> Repair or replace harness.

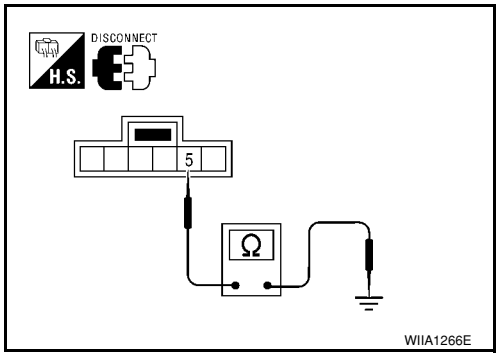

3. CHECK INTELLIGENT KEY SOLENOID RESISTANCE

Check resistance between key switch and ignition knob switch terminals 5 and 6.

Key switch and ignition knob switch	Terminal	Terminal	Resistance
	5	6	1-10 Ω

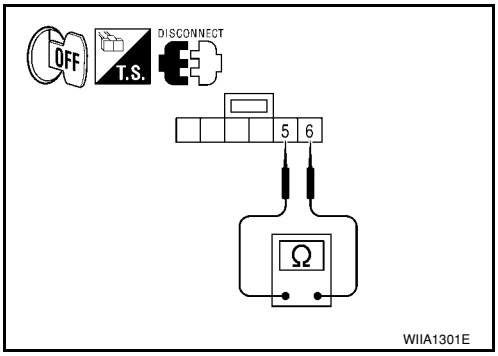

OK or NG

OK >> Key switch and ignition knob switch is OK.
NG >> Replace key switch and ignition knob switch.

Ignition Switch Position Check

INFOID:0000000001704030

1. CHECK IGNITION POWER SUPPLY

Check voltage between Intelligent Key unit connector and ground.

Terminals			Ignition switch position		
(+)		(–)			
Intelligent Key unit connector	Terminal		OFF	ACC	ON
M52	6	Ground	0	0	Battery voltage

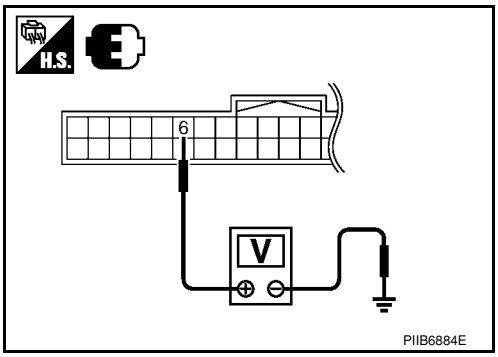

OK or NG

OK >> Ignition power supply is OK.
NG >> Check the following.
- Intelligent Key unit power supply circuit.
- 10A fuse [No. 2, located in the fuse block (J/B)]

Stop Lamp Switch Check (With CVT)

INFOID:0000000001704031

1. CHECK STOP LAMP SWITCH INPUT SIGNAL

1. Turn ignition switch OFF.
2. Disconnect Intelligent Key unit connector.
3. Check voltage between Intelligent Key unit harness connector M52 terminal 26 and ground.

Connector	Terminals		Condition	Voltage (V) (Approx.)
	(+)	(-)		
M52	26	Ground	Brake pedal depressed	Battery voltage
			Brake pedal released	0

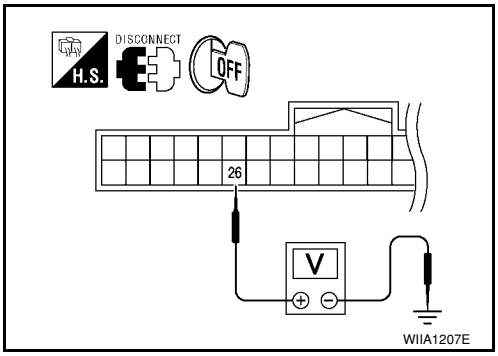

OK or NG

OK >> Stop lamp switch is OK.
NG >> GO TO 2.

2. CHECK STOP LAMP SWITCH POWER SUPPLY CIRCUIT

1. Disconnect stop lamp switch connector.

2. Check voltage between stop lamp switch harness connector E13 terminal 1 and ground.

1 - Ground : Battery voltage

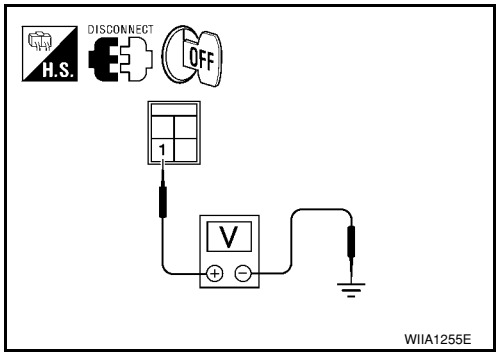

OK or NG

OK >> GO TO 3.
NG >> Repare or replace harness between stop lamp switch power supply circuit and fuse.

3. CHECK STOP LAMP SWITCH OPERATION

Check continuity between stop lamp switch terminals 1 and 2.

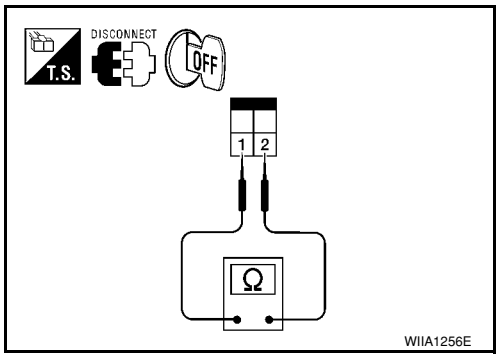

Component	Terminals		Condition	Continuity
Stop lamp switch	1	2	Brake pedal depressed	Yes
			Brake pedal not depressed	No

OK or NG

OK >> GO TO 4.
NG >> Replace stop lamp switch.

4. CHECK STOP LAMP SWITCH CIRCUIT

1. Check continuity between Intelligent Key unit harness connector (A) M52 terminal 26 and stop lamp switch harness connector (B) E13 terminal 2.

26 - 2 : Continuity should exist.

2. Check continuity between Intelligent Key unit harness connector M52 terminal 26 and ground.

26 - Ground : Continuity should not exist.

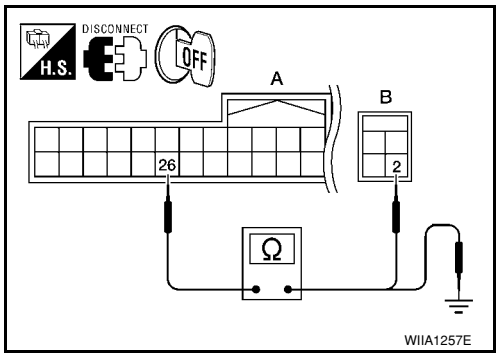

OK or NG

OK >> Check condition of harness and connector.
NG >> Repair or replace harness.

Stop Lamp Switch Check (With M/T)

INFOID:0000000001704032

1. CHECK STOP LAMP SWITCH INPUT SIGNAL

1. Turn ignition switch OFF.
2. Disconnect Intelligent Key unit connector.
3. Check voltage between Intelligent Key unit harness connector M52 terminal 26 and ground.

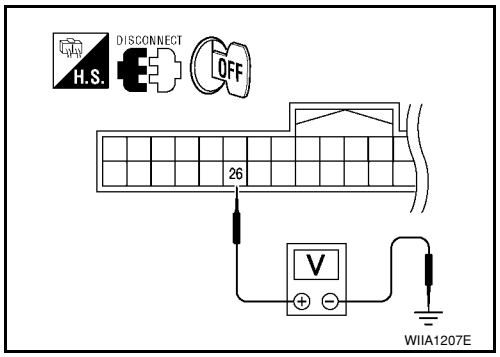

Connector	Terminals		Condition	Voltage (V) (Approx.)
	(+)	(-)		
M52	26	Ground	Brake pedal depressed	Battery voltage
			Brake pedal released	0

OK or NG

OK >> Stop lamp switch is OK.
NG >> GO TO 2.

2.CHECK STOP LAMP SWITCH POWER SUPPLY CIRCUIT

1. Disconnect stop lamp switch connector.
2. Check voltage between stop lamp switch harness connector E13 terminal 1 and ground.

1 - Ground : Battery voltage

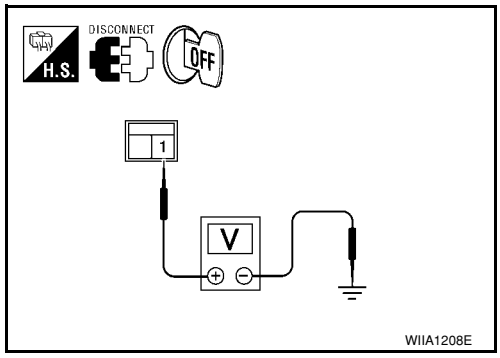

OK or NG

OK >> GO TO 3.
NG >> Repair or replace harness between stop lamp switch power supply circuit and fuse.

3.CHECK STOP LAMP SWITCH OPERATION

Check continuity between stop lamp switch terminals 1 and 2.

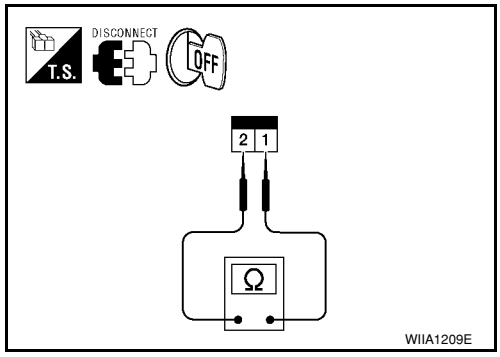

Component	Terminals		Condition	Continuity
Stop lamp switch	1	2	Brake pedal depressed	Yes
			Brake pedal not depressed	No

OK or NG

OK >> GO TO 4.
NG >> Replace stop lamp switch.

4.CHECK STOP LAMP SWITCH CIRCUIT

1. Check continuity between Intelligent Key unit harness connector (A) M52 terminal 26 and stop lamp switch harness connector (B) E13 terminal 2.

26 - 2 : Continuity should exist.

2. Check continuity between Intelligent Key unit harness connector M52 terminal 26 and ground.

26 - Ground : Continuity should not exist.

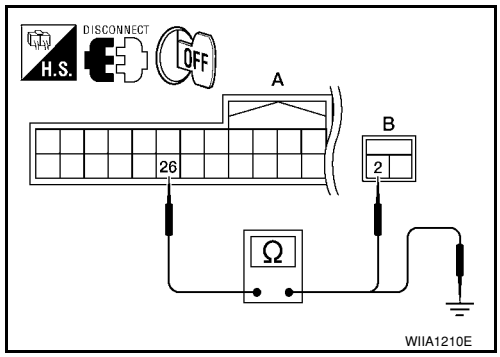

OK or NG

OK >> Check condition of harness and connector.
NG >> Repair or replace harness.

Check CVT Device (Park Position Switch) Check

INFOID:0000000001704033

1.CHECK CVT DEVICE (PARK POSITION SWITCH) INPUT SIGNAL

1. Turn ignition switch OFF.
2. While pressing the ignition knob switch, check voltage between Intelligent Key unit harness connector M52 terminal 10 and ground.

Connector	Terminals (+)	Terminals (-)	Condition	Voltage (V) (Approx.)
M52	10	Ground	Selector lever is in "P" position	0
			Other than above	Battery voltage

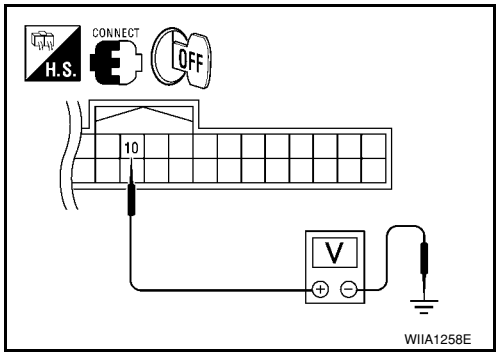

OK or NG

OK >> Replace Intelligent Key unit. Refer to BL-142, "Removal and Installation of Intelligent Key Unit".

NG >> GO TO 2.

2. CHECK CVT DEVICE (PARK POSITION SWITCH)

1. Disconnect CVT device (park position switch) connector.
2. Check continuity between CVT device (park position switch) terminals 6 and 8.

Component	Terminals		Condition	Continuity
CVT device (park position switch)	6	8	Selector lever is in "P" position	Yes
			Other than above	No

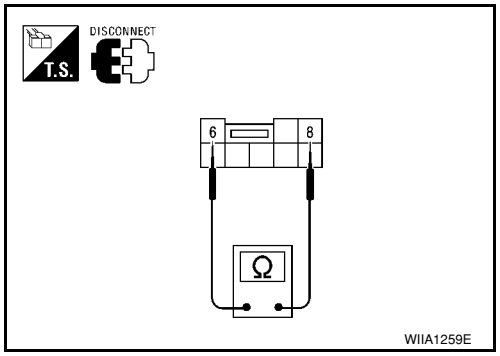

OK or NG

OK >> GO TO 3.

NG >> Replace CVT device (park position switch).

3. CHECK PARK POSITION SWITCH GROUND CIRCUIT

Check continuity between CVT device (park position switch) harness connector M38 terminal 6 and ground.

6 – Ground : Continuity should exist.

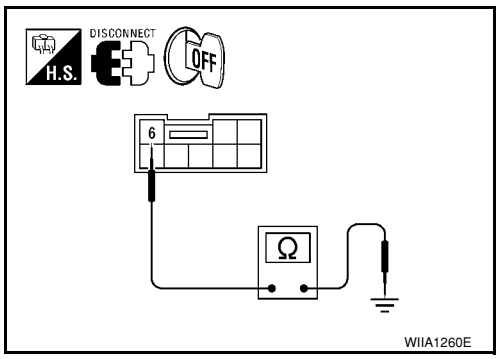

OK or NG

OK >> GO TO 4.

NG >> Repair or replace harness.

4. CHECK PARK POSITION SWITCH CIRCUIT

1. Disconnect Intelligent Key unit connector.
2. Check continuity between Intelligent Key unit harness connector (A) M52 terminal 10 and CVT device (park position switch) harness connector (B) M38 terminal 8.

10 – 8 : Continuity should exist.

3. Check continuity between Intelligent Key unit harness connector (A) M52 terminal 10 and ground.

10 – Ground : Continuity should not exist.

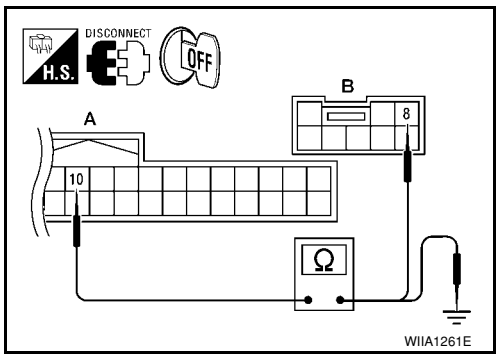

OK or NG

OK >> GO TO 5.
NG >> Repair or replace harness.

5. CHECK INTELLIGENT KEY OUTPUT SIGNAL

1. Connect Intelligent Key unit connector and CVT device (park position switch) connector.
2. Check voltage between Intelligent Key unit connector M52 terminal 10 and ground.

Connector	Terminal		Condition	Voltage (V) (Approx.)
	(+)	(-)		
M52	10	Ground	Selector lever is in “P” position	0
			Other than above	Battery voltage

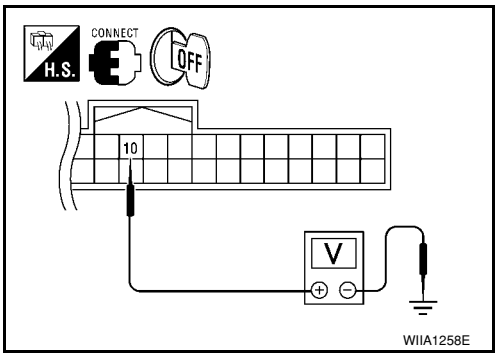

OK or NG

OK >> CVT device (park position switch) circuit is OK.
NG >> Replace Intelligent Key unit. Refer to BL-142, "Removal and Installation of Intelligent Key Unit".

"P-SHIFT" Warning Lamp (With CVT) Check

INFOID:0000000001704034

1. CHECK WARNING LAMP OPERATION

With CONSULT-III
- Check “INDICATOR” in “ACTIVE TEST” mode with CONSULT-III.
- Select “KNOB ON”.

“P-SHIFT” warning lamp should illuminate.

Without CONSULT-III
1. Turn ignition switch OFF.
2. While monitoring the combination meter warning lamps, turn ignition switch ON. "P-SHIFT" warning lamp should illuminate for 1 second to perform a bulb check.

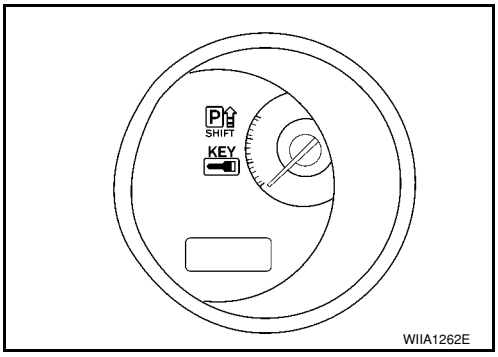

OK or NG

OK >> INSPECTION END
NG >> Check combination meter. Refer to DI-4.

"LOCK" Warning Lamp (With M/T) Check

INFOID:0000000001704035

1. CHECK WARNING LAMP OPERATION

With CONSULT-III
- Check “INDICATOR” in “ACTIVE TEST” mode with CONSULT-III.
- Select “KNOB ON”.

“LOCK” warning lamp should illuminate.

Without CONSULT-III
1. Turn ignition switch OFF.

2. While monitoring the combination meter warning lamps, turn ignition switch ON. "LOCK" warning lamp should illuminate for 1 second to perform a bulb check.

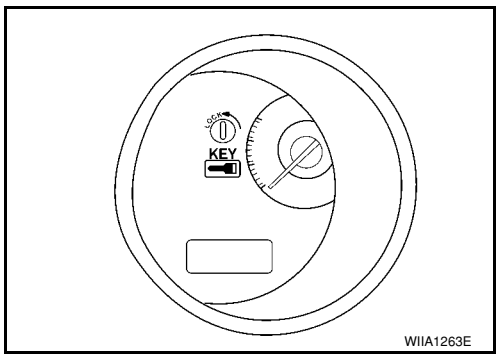

OK or NG

OK >> INSPECTION END
NG >> Check combination meter. Refer to DI-4.

"KEY" Warning Lamp (RED) Check

INFOID:0000000001704036

1. CHECK WARNING LAMP OPERATION

With CONSULT-III

- Check “INDICATOR” in “ACTIVE TEST” mode with CONSULT-III.
- Select “RED ON”.

“KEY” warning lamp (red) should illuminate.

Without CONSULT-III

1. Turn ignition switch OFF.
2. Ensure Intelligent Key is outside and away from the vehicle.
3. While monitoring the combination meter warning lamps, push the ignition knob switch.
4. The "KEY" warning lamp (red) should illuminate indicating that the Intelligent Key is not nearby.

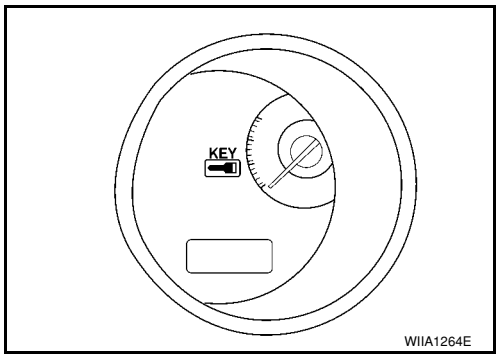

OK or NG

OK >> INSPECTION END
NG >> Check combination meter. Refer to DI-4.

"KEY" Warning Lamp (GREEN) Check

INFOID:0000000001704037

1. CHECK WARNING LAMP OPERATION

With CONSULT-III

- Check “INDICATOR” in “ACTIVE TEST” mode with CONSULT-III.
- Select “BLUE ON”.

“KEY” warning lamp (green) should illuminate.

Without CONSULT-III

1. Turn ignition switch OFF.
2. Ensure Intelligent Key is in your possession inside the vehicle.

3. While monitoring the combination meter warning lamps, push the ignition knob switch.
4. The "KEY" warning lamp (green) should illuminate indicating that the Intelligent Key is nearby.

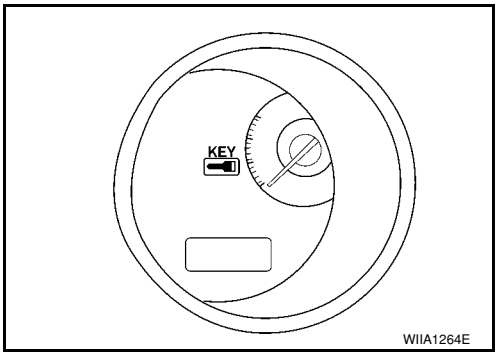

OK or NG

OK >> INSPECTION END
NG >> Check combination meter. Refer to DI-4.

Check Warning Chime in Combination Meter

INFOID:0000000001704038

1. CHECK WARNING CHIME OPERATION

With CONSULT-III

- Check “INSIDE BUZZER” in “ACTIVE TEST” mode with CONSULT-III.
- Touch “TAKE OUT”, “KNOB” and “KEY” on “ACTIVE TEST” screen.

Does each warning chime sound?

OK or NG

OK >> INSPECTION END
NG >> GO TO 2.

2. CHECK OTHER WARNING CHIME OPERATION

Check other warning chime operation using combination meter.

Does warning chime in combination meter sound?

OK or NG

OK >> INSPECTION END
NG >> GO TO DI-41.

Hazard Function Check

INFOID:0000000001704039

1. CHECK HAZARD WARNING LAMP

Do hazard warning lamps flash with hazard switch?

YES or NO

YES >> Hazard warning lamp circuit is OK.
NO >> Check hazard circuit. Refer to LT-48.

Horn Function Check

INFOID:0000000001704040

First perform the “SELF-DIAG RESULTS” of “BCM” with CONSULT-III, then perform the trouble diagnosis of malfunction system indicated in “SELF-DIAG RESULTS” of “BCM”. Refer to BCS-17, "CAN Communication Inspection Using CONSULT-III (Self-Diagnosis)".

1. CHECK HORN OPERATION

Check if horn sounds with horn switch.

Does horn operate?

Yes >> GO TO 2.
No >> Check horn circuit. Refer to WW-37.

2. CHECK IPDM E/R INPUT SIGNAL

Check voltage between IPDM E/R connector and ground.

Terminals			Voltage (V) (Approx.)
(+)		(–)	
IPDM E/R connector	Terminal		
E46	45	Ground	Battery voltage

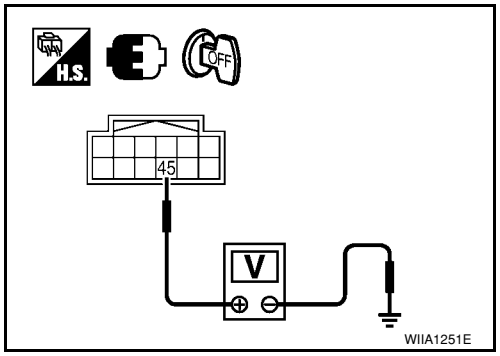

OK or NG

OK >> Replace IPDM E/R. Refer to PG-26, "Removal and Installation of IPDM E/R".

NG >> GO TO 3.

3. CHECK HORN RERAY CIRCUIT

1. Turn ignition switch OFF.
2. Disconnect IPDM E/R and horn relay connector.
3. Check continuity between IPDM E/R harness connector and horn relay harness connector.

A		B		Continuity
IPDM E/R connector	Terminal	Horn relay connector	Terminal	
E46	45	H-1	1	Yes

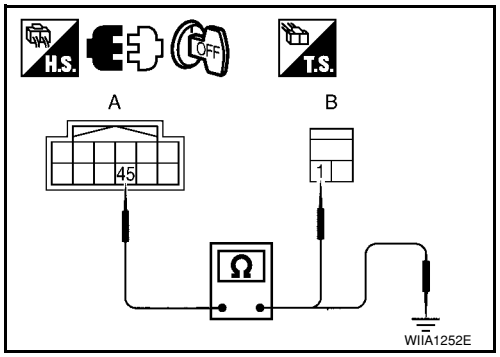

4. Check continuity between IPDM E/R harness connector and ground.

A		Ground	Continuity
IPDM E/R connector	Terminal		
E46	45		No

OK or NG

OK >> Check condition of harness and connector.

NG >> Repair or replace harness.

Headlamp Function Check

INFOID:0000000001704041

1. CHECK HEADLAMP OPERATION

Check if headlamps operate by lighting switch.

Do headlamps come on when turning lighting switch ON?

YES >> Headlamp circuit is OK.

NO >> Check headlamp system. Refer to LT-4 or LT-25.

Intelligent Key Battery Replacement

INFOID:0000000001704042

SEC.998
NOTE:
- Be careful not to touch the circuit board or battery terminal.
- The keyfob is water-resistant. However, if it does get wet, immediately wipe it dry.

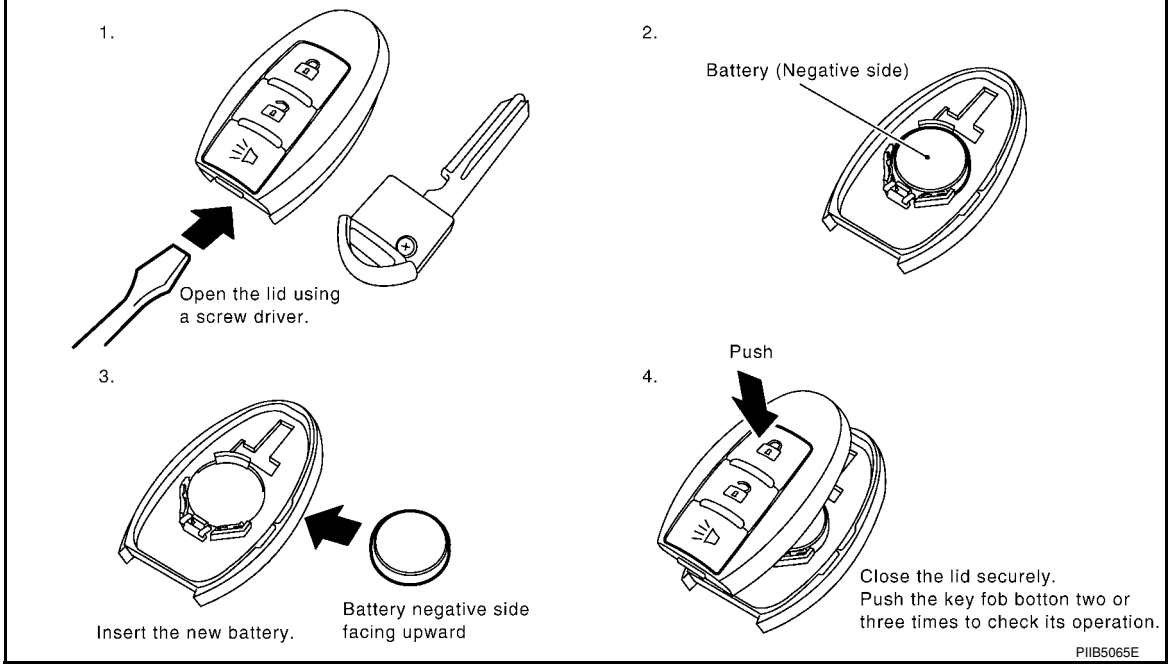

INTELLIGENT KEY BATTERY INSPECTION

Check by connecting a resistance (approximately 300Ω) so that the current value becomes about 10 mA.

Standard : Approx. 2.5 - 3.0V

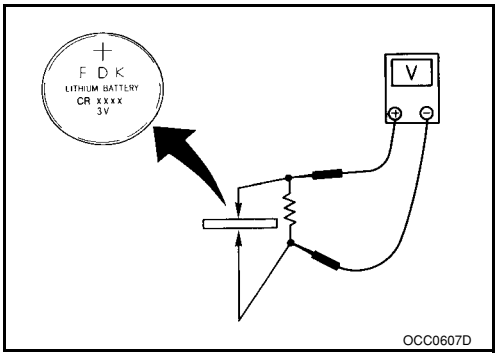

Remote Keyless Entry Function

INFOID:0000000001704043

Check keyfob function using Remote Keyless Entry Tester J-43241.

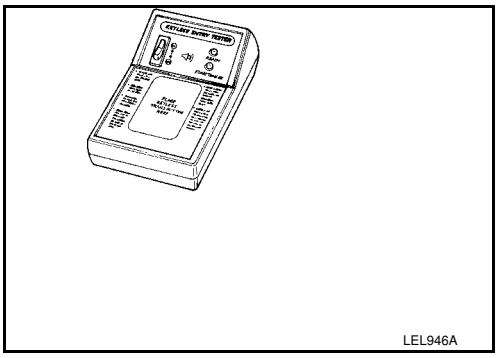

Removal and Installation of Intelligent Key Unit

INFOID:0000000001704044

REMOVAL

1. Remove glove box assembly. Refer to IP-11, "Removal and Installation".

2. Disconnect Intelligent Key unit connector, remove screw and Intelligent Key unit.

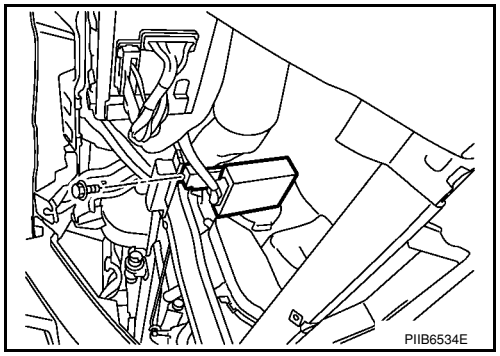

INSTALLATION

Installation is in the reverse order of removal.

DOOR

Fitting Adjustment

INFOID:0000000001704045

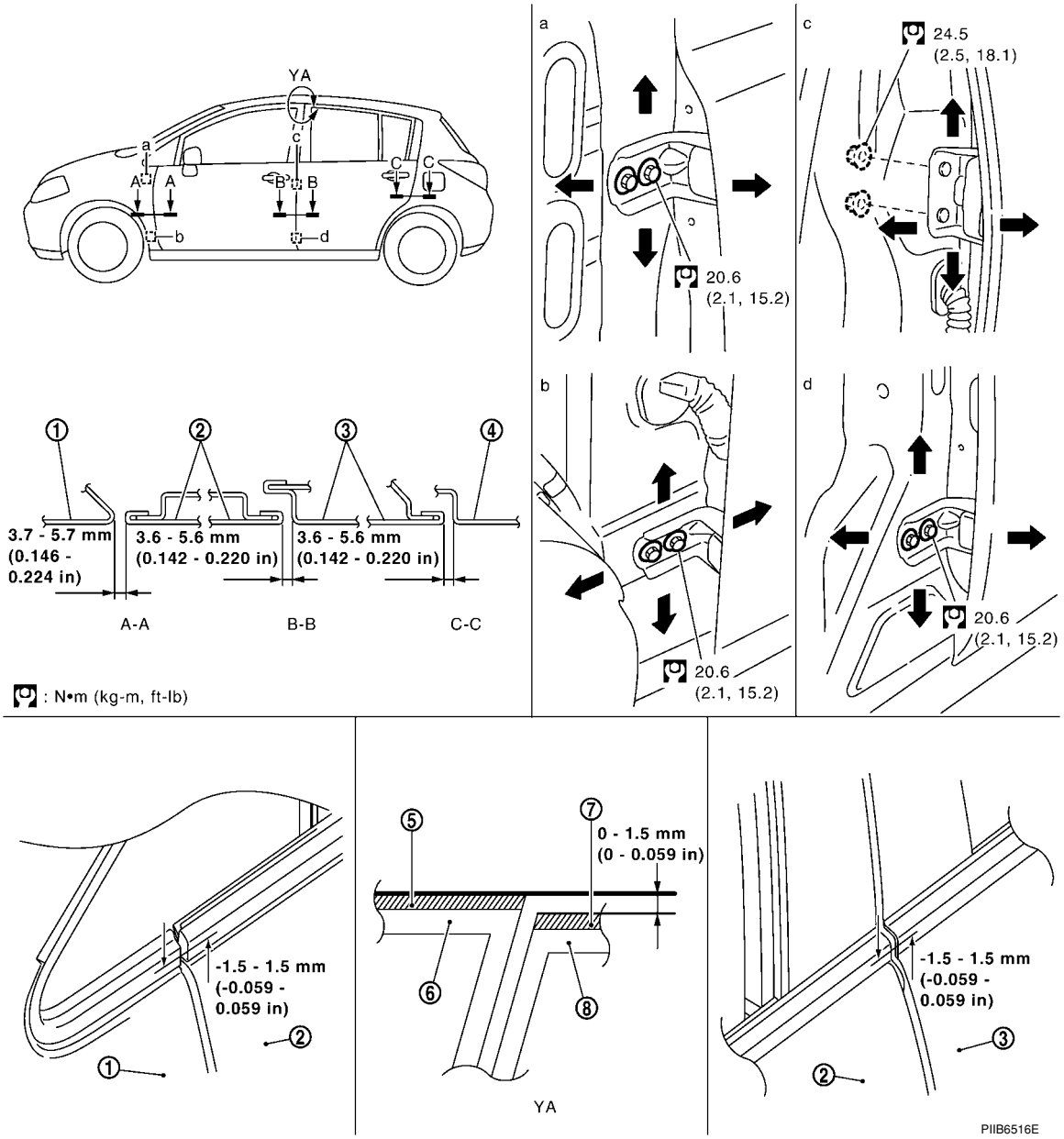

1. Front fender
2. Front door outer
3. Rear door outer
4. Rear fender
5. Front door weatherstrip
6. Front door sash
7. Rear door weatherstrip
8. Rear door sash

FRONT DOOR

Longitudinal Clearance and Surface Height Adjustment at Front End
Access from inside the fender to loosen the hinge bolts. Raise the front door at rear end to adjust.

Surface Height Adjustment
Loosen the front door bolts, and adjust the surface height difference of fender and front door according to the fitting standard dimension.

Striker Adjustment

1.

16.7 N·m (1.7 kg-m, 12 ft-lb)

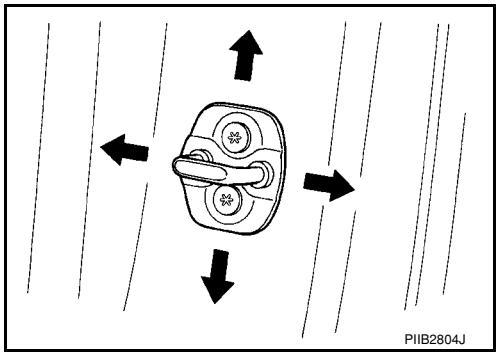

REAR DOOR

Longitudinal Clearance and Surface Height Adjustment at Front End

1. Remove the center pillar upper and lower garnishes. Refer to EI-37.
2. Access from inside the vehicle to loosen the hinge nuts. Open the rear door, and raise the rear door at rear end to adjust.

Surface Height Adjustment

Loosen the front door striker bolts and rear door hinge nuts, and adjust the surface height difference of front and rear doors according to the fitting standard dimension.

Striker Adjustment

1.

16.7 N·m (1.7 kg-m, 12 ft-lb)

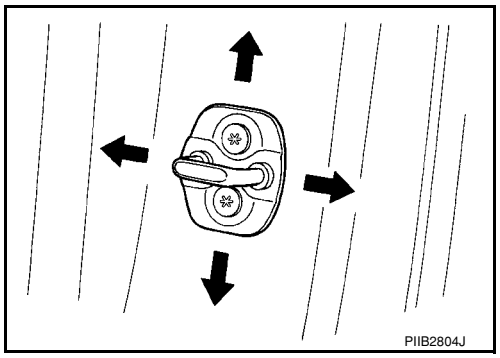

BACK DOOR

Longitudinal Clearance and Surface Height Adjustment

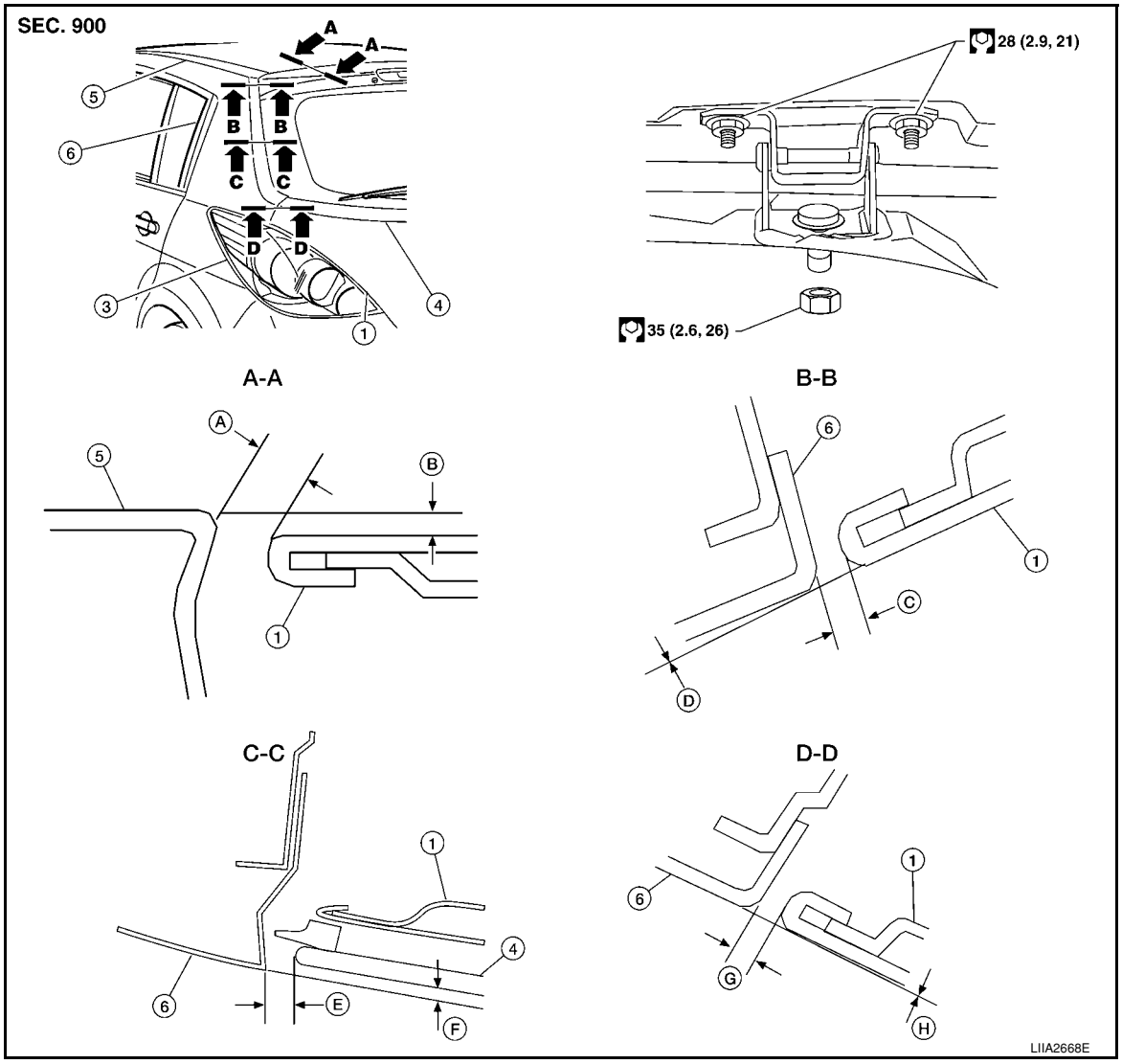

1. Back door assembly	2. Back door hinge	3. Tail lamp assembly
4. Back window glass	5. Roof	6. Rear pillar
A. 6.0 ± 1.0 mm (0.24 ± 0.04 in)	B. -0.5 ± 1.0 mm (-0.02 ± 0.04 in)	C. 5.0 ± 1.2 mm (0.20 ± 0.05 in)
D. 0.0 ± 1.5 mm (0.0 ± 0.06 in)	E. 5.0 ± 2.3 mm (0.20 ± 0.9 in)	F. 2.7 +1.6 -2.1 mm (0.11 + 0.06 - 0.08 in)
G. 5.0 ± 1.2 mm (0.20 ± 0.05 in)	H. 0.0 ± 1.5 mm (0.0 ± 0.06 in)	

1. Open and support the back door.
2. Slightly loosen the hinge nuts.
3. Reposition the door as necessary and tighten the nuts.
4. Confirm the adjustment. Repeat as necessary to obtain the desired fit.

Striker Adjustment

1.

20 N·m (2.2 kg-m, 16 ft-lb)

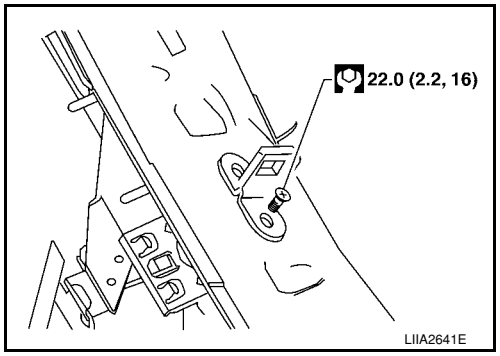

Removal and Installation

INFOID:0000000001704046

FRONT DOOR

CAUTION:

- **When removing and installing the front door assembly, support the door with a jack and cloth to protect the door and body.**
- **When removing and installing front door assembly, be sure to carry out the fitting adjustment. Refer to BL-144, "Fitting Adjustment".**
- **After installing, apply touch-up paint onto the head of the hinge nuts.**
- **Check the hinge rotating part for lubrication. If necessary, apply “body grease”.**
- **Operate with two workers, because of its heavy weight.**
- **Check front door open/close operation after installation.**

Removal

1. Remove dash side finisher. Refer to EI-38, "Removal and Installation".
2. Disconnect the front door harness connectors.
3. Remove the front door harness grommet, and then remove the harness from the vehicle.

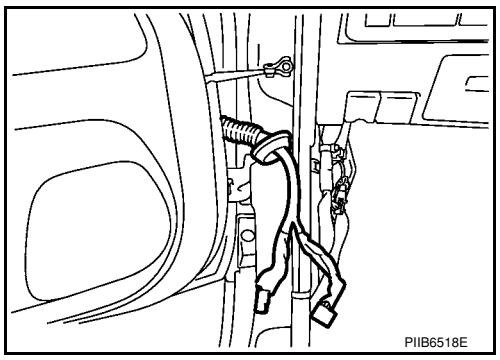

4. Remove the check link bolt.

14.7 N·m (1.5 kg-m, 11 ft-lb)

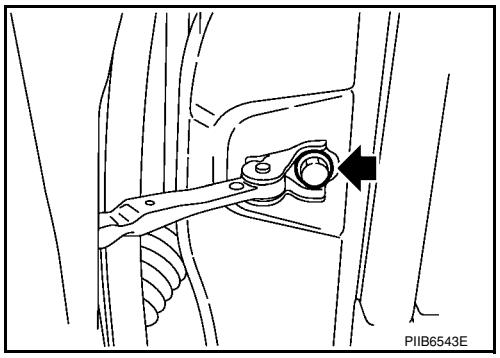

5. Remove the hinge nuts and then the door assembly.

24.5 N·m (2.5 kg-m, 18 ft-lb)

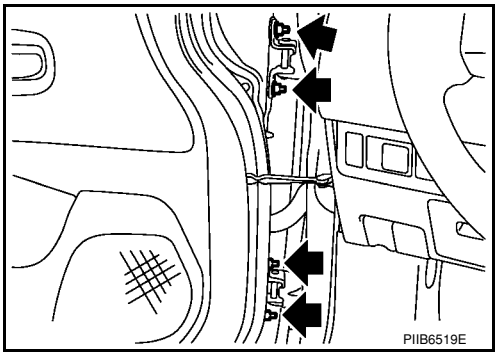

Installation
Installation is in the reverse order of removal.

REAR DOOR

CAUTION:

- **When removing and installing the rear door assembly, support the door with a jack and cloth to protect the door and body.**
- **When removing and installing rear door assembly, be sure to carry out the fitting adjustment. Refer to BL-144, "Fitting Adjustment".**
- **After installing, apply touch-up paint onto the head of the hinge nuts.**
- **Check the hinge rotating part for poor lubrication. If necessary, apply “body grease”.**
- **Operate with two workers, because of its heavy weight.**
- **Check rear door open/close operation after installation.**

Removal

1. Remove the rear door harness grommet.

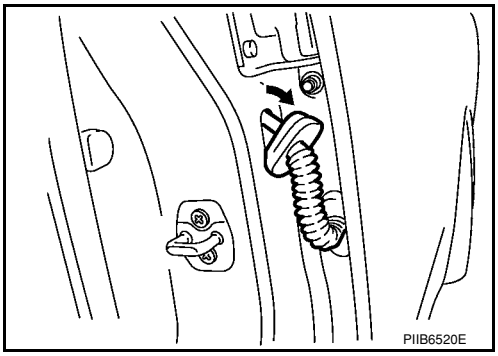

2. Disconnect the rear door harness connector.

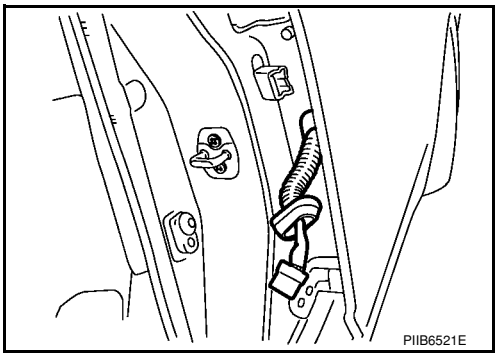

3. Remove the check link bolt.

14.7 N·m (1.5 kg-m, 11 ft-lb)

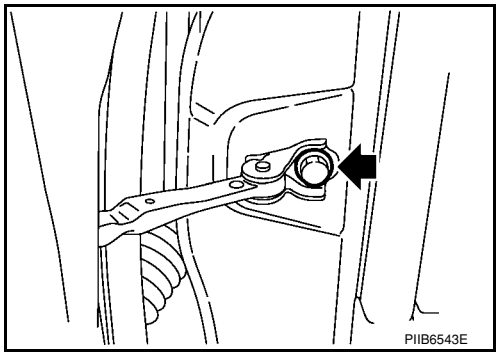

4. Remove the hinge nuts and the door assembly.

24.5 N·m (2.5 kg-m, 18 ft-lb)

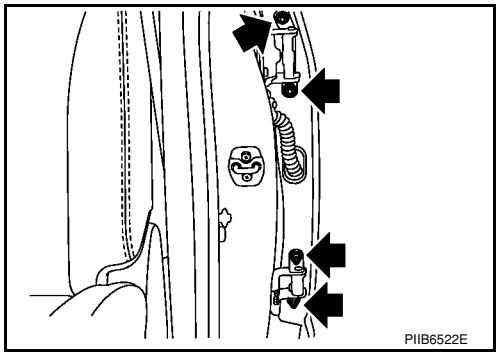

Installation
Installation is in the reverse order of removal.

BACK DOOR

Removal

1. Remove the back door glass. Refer to GW-15.
2. Remove the back door lock assembly. Refer to BL-156.
3. Remove the back door wire harness.
4. Remove the rear washer nozzle and hose from the back door. Refer to WW-31, "Removal and Installation".
5. Support the back door.
   CAUTION:
   Two technicians should be used to avoid damaging the back door during removal.
6. Remove the back door stays.
7. Remove the door side nuts and the back door assembly.

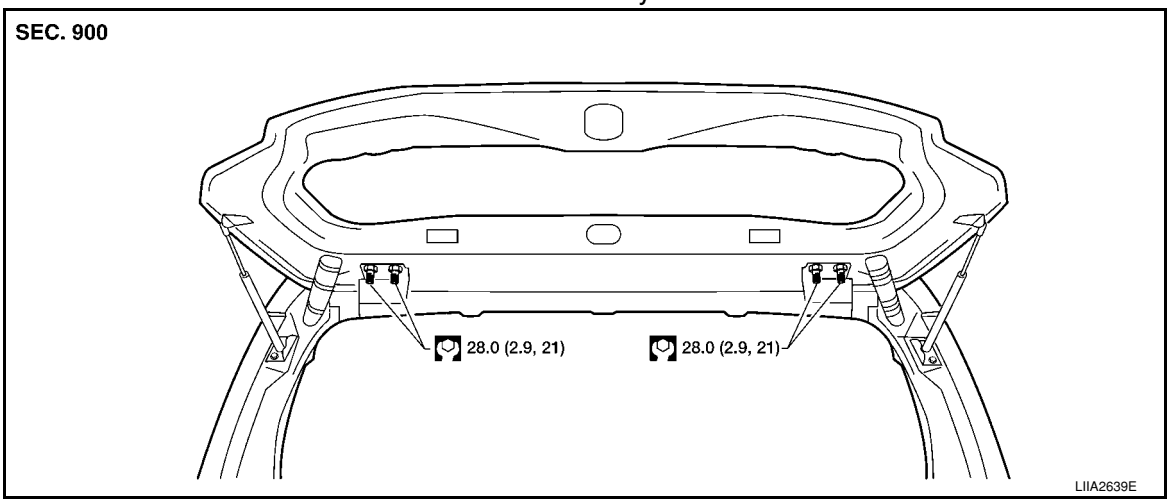

Installation
Installation is in the reverse order of removal.
- Align the back door. Refer to BL-144, "Fitting Adjustment".

FRONT DOOR LOCK

Component Parts Location

INFOID:0000000001704047

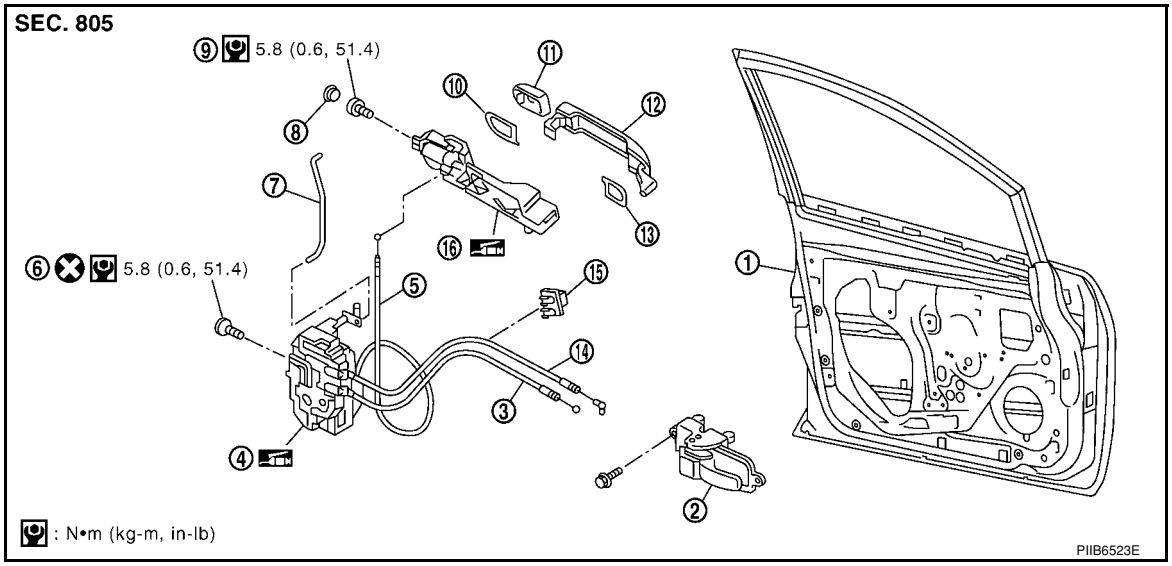

1. Front door	2. Inside handle	3. Inside handle cable
4. Door lock assembly	5. Outside handle cable	6. TORX bolt (T30)
7. Key cylinder connecting rod	8. Grommet	9. TORX bolt (T30)
10. Rear gasket	11. Door key cylinder assembly (Driver's side) Outside handle escutcheon (passenger's side)	12. Outside handle
13. Front gasket	14. Lock knob cable	15. Holder
16. Outside handle bracket		

Removal and Installation

INFOID:0000000001704048

REMOVAL

1. Remove front door finisher. Refer to EI-32, "Removal and Installation" .
2. Fully close front door window.
3. Remove the front door sealing screen.
   NOTE:
   If sealing screen is reused, cut butyl tape in a way that leaves it on the sealing screen.
4. Remove front door rear glass run channel. Refer to GW-42, "Removal and Installation" .
5. Remove the cables from the holder.
6. Remove inside handle bolt, and slide the handle toward the rear of the vehicle. disengage the handle from the door panel, and remove the inside handle.

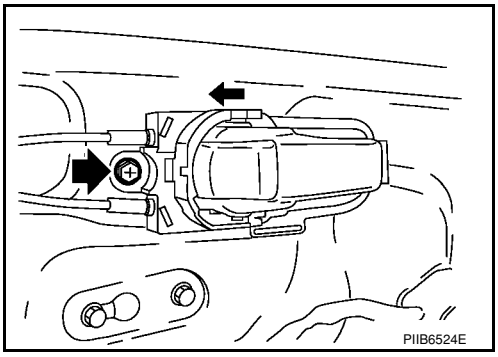

7. Disengage the handle from the door panel, and remove the inside handle.

8. Disconnect the inside handle cable and lock knob cable from the inside handle.
   CAUTION:
   During removal and installation, work so as not to bend the ends of the lock knob cable and inside handle cable.

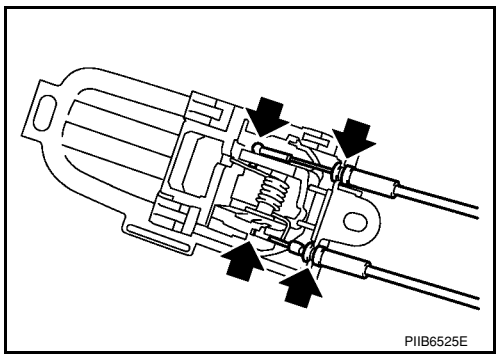

9. Remove the door side grommet, and the door key cylinder assembly (escutcheon) bolt.
10. Remove the key cylinder connecting rod (key cylinder side).
11. If equipped, disconnect the door antenna, the door request switch connector and remove the harness clamp. (Vehicle with intelligent key systems only).

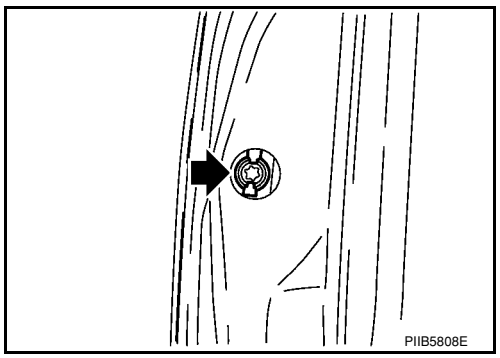

12. Remove the door cylinder assembly while pulling the outside handle forward.

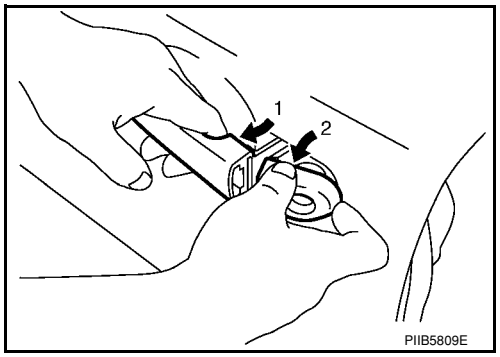

13. Pull the outside door handle forward and then slide it toward the rear of the vehicle to remove.

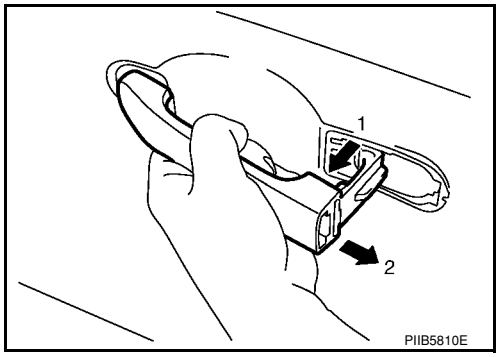

14. Remove the front and rear gaskets.

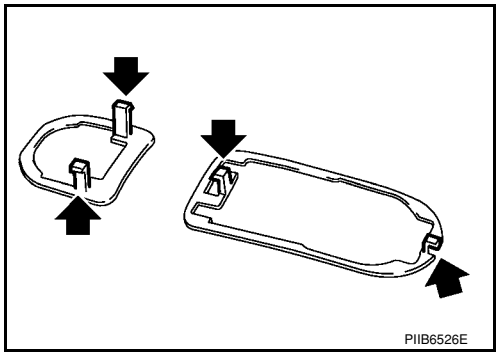

15. Remove the door lock assembly bolts.

5.8 N·m (0.6 kg-m, 51.4 in-lb)

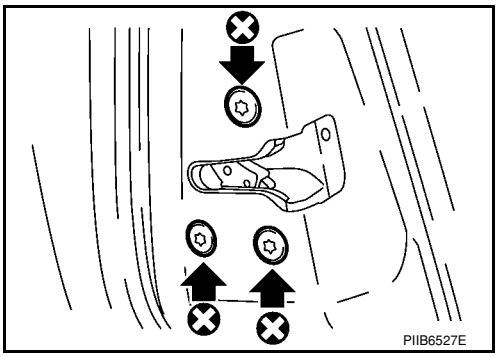

16. Slide the outside handle bracket toward the rear of the vehicle, and remove the assembly.

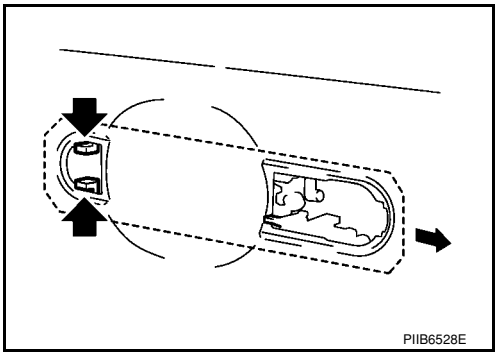

17. If equipped, disconnect the door lock assembly electrical connector.
18. Separate the outside handle cable from the outside handle bracket.

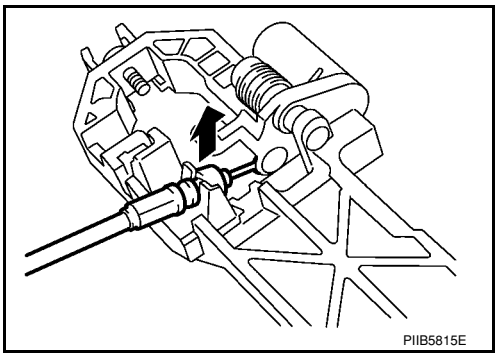

INSTALLATION

Installation is in the reverse order of removal.

CAUTION:

- **To install each rod, be sure to rotate the rod holder until a click is felt.**
- **When installing door lock assembly, be careful when rotating the outside handle cable as shown in the figure.**
- **Place the outside handle bracket cable on the inside of door lock assembly before installing.**

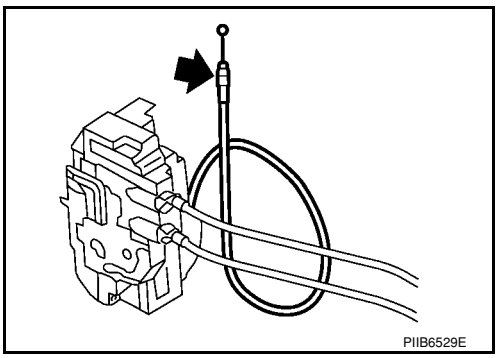

REAR DOOR LOCK

Component Parts Location

INFOID:0000000001704049

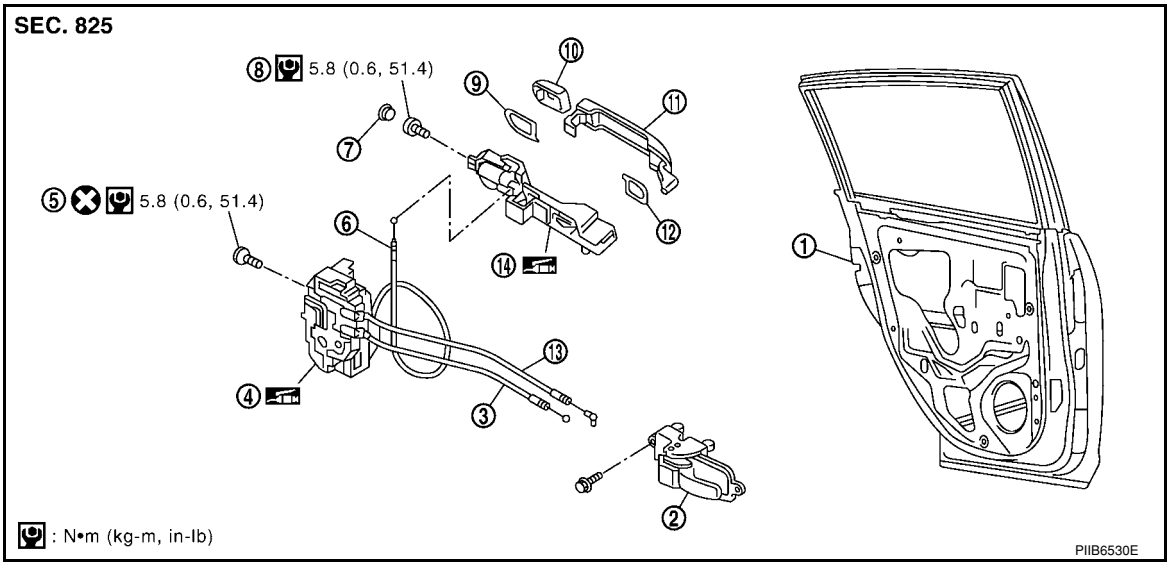

1. Rear door	2. Inside handle	3. Inside handle cable
4. Door lock assembly	5. TORX bolt (T30)	6. Outside handle cable
7. Grommet	8. TORX bolt (T30)	9. Rear gasket
10. Outside handle escutcheon	11. Outside handle	12. Front gasket
13. Lock knob cable	14. Outside handle bracket	

Removal and Installation

INFOID:0000000001704050

REMOVAL

1. Remove the partition glass. Refer to GW-46 .
2. Support door glass while lifting it up to the door window completely closed position.
3. Remove inside handle bolt, slide handle toward rear of vehicle, disconnect it from the door panel, and remove the inside handle.

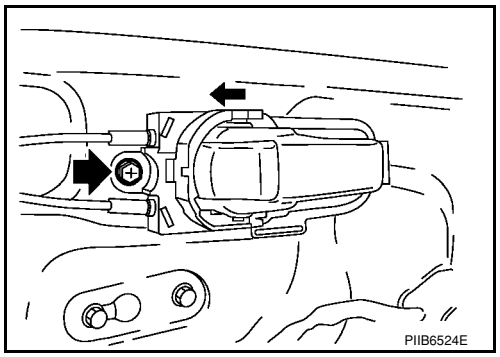

4. Disconnect the inside handle and lock knob cables from the inside handle.
   CAUTION:
   During removal and installation, do not to bend the ends of the lock knob cable and inside handle cable.

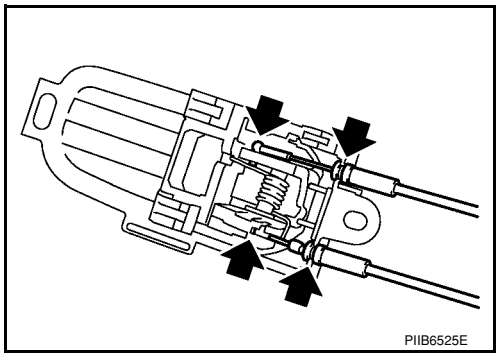

5. Remove the door side grommet, and the outside handle escutcheon screw.

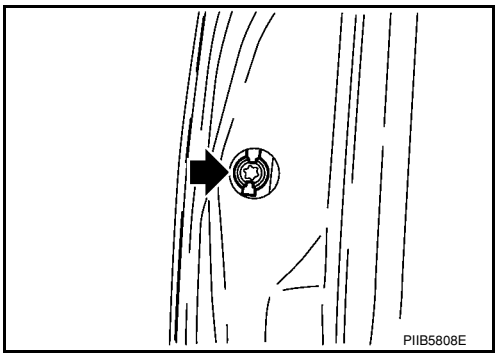

6. Pull the outside handle forward (1), while removing outside handle escutcheon (2).

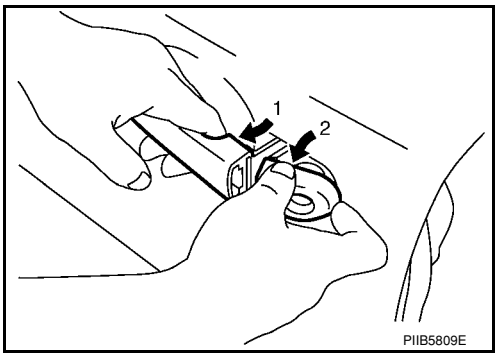

7. Pull outside door handle forward (1), and slide it toward the rear of the vehicle to remove (2).

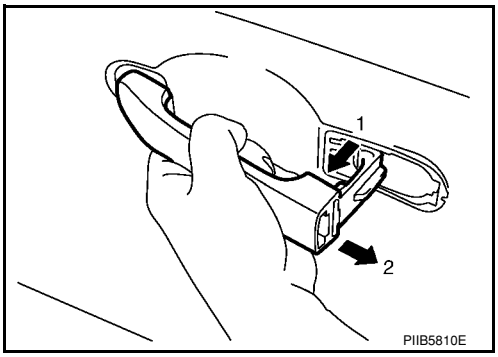

8. Remove the front and rear gaskets.

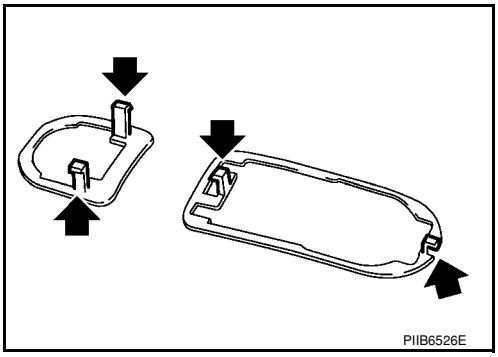

9. Remove the door lock assembly screws.

: 5.8 N·m (0.6 kg-m, 51.4 in-lb)

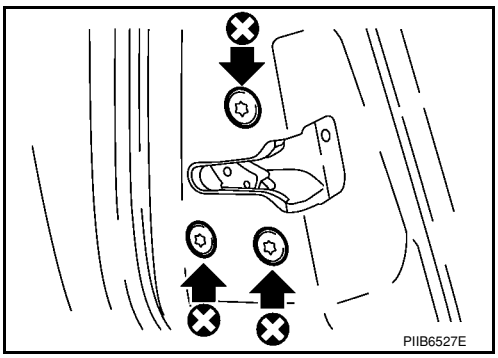

10. Slide the outside handle bracket toward the rear of vehicle, remove the outside handle bracket and the door lock assembly.

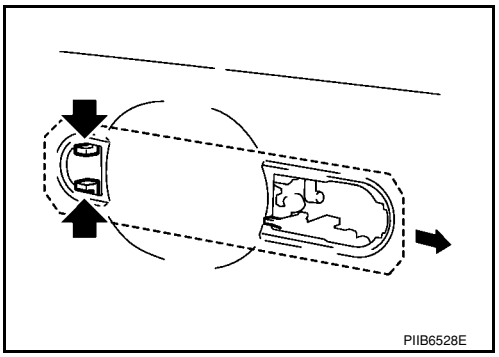

11. If equipped, disconnect the door lock assembly electrical connector.
12. Disconnect the outside handle cable from the outside handle bracket.

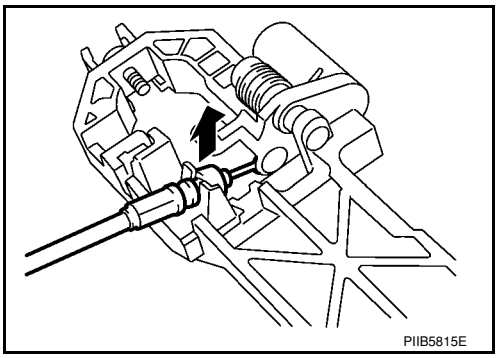

INSTALLATION

Installation is in the reverse order of removal.

CAUTION:

- **To install each rod, be sure to rotate the rod holder until a click is felt.**
- **When installing door lock assembly, be careful when rotating the outside handle cable as shown.**
  - **Place the outside handle bracket cable on the inside of door lock assembly before installing.**

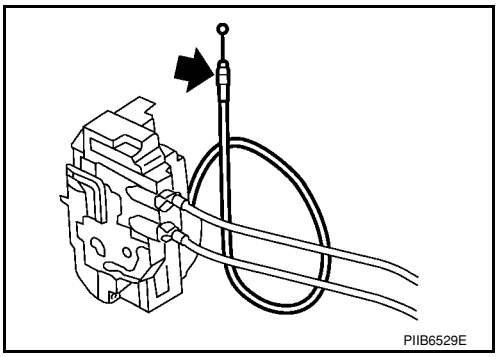

BACK DOOR LOCK

Component Parts and Harness Connector Location

INFOID:0000000001704051

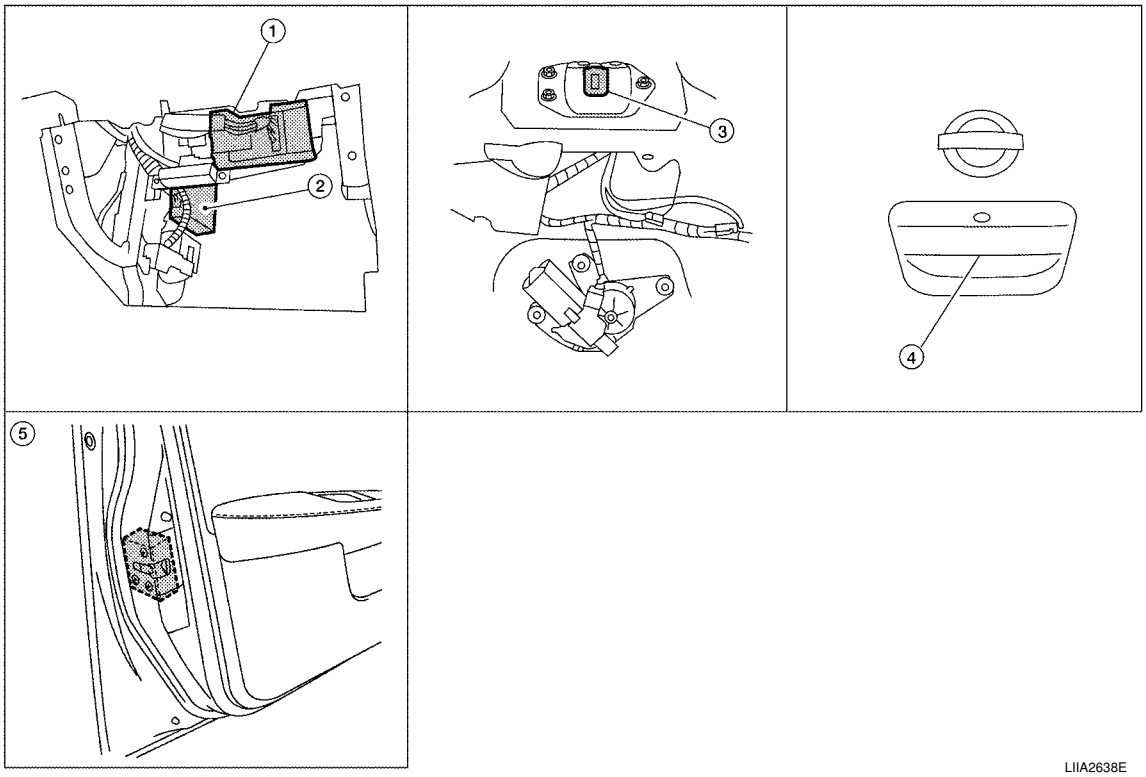

1. BCM M18, M19, M20 (view with glove box removed)
2. Intelligent Key unit M52 (with Intelligent Key)
3. Back door lock assembly (actuator) D405
4. Back door opener switch D408
5. Front door lock actuator (door unlock sensor) LH D3, RH D114

System Description

INFOID:0000000001704052

Power is supplied at all times
- through 40A fusible link (letter **g,** located in fuse and fusible link box)
- to BCM terminal 70
- through 10A fuse [No. 8, located in fuse block (J/B)]
- to BCM terminal 57
- through 10A fuse [No. 31, located in fuse block (J/B)]
- to Intelligent Key unit terminal 11 (if equipped).

Ground is supplied
- to BCM terminal 67 and
- to Intelligent Key unit terminal 12 (if equipped)
- through body grounds M57 and M61.

When back door opener switch is ON (pushed), ground is supplied
- to BCM terminal 30 (without Intelligent Key)
- through back door opener switch terminals 1 and 2
- through front door lock actuator LH (door unlock sensor) terminals 4 and 5 (without power windows) or
- through front door lock actuator RH (door unlock sensor) terminals 4 and 5 (with power windows)
- through body grounds M57 and M61
- to Intelligent Key unit terminal 24 (if equipped)
- through back door opener switch terminals 1 and 2
- through body grounds B117, B132 and D402.

Then power is supplied
- through BCM terminal 53
- to back door lock assembly (actuator) terminal 1.

Ground is supplied

- to back door lock assembly (actuator) terminal 2
- through body grounds B117, B132 and D402.

Then BCM operates back door lock assembly (actuator).

Wiring Diagram - B/DOOR -

INFOID:0000000001704053

WITHOUT INTELLIGENT KEY SYSTEM

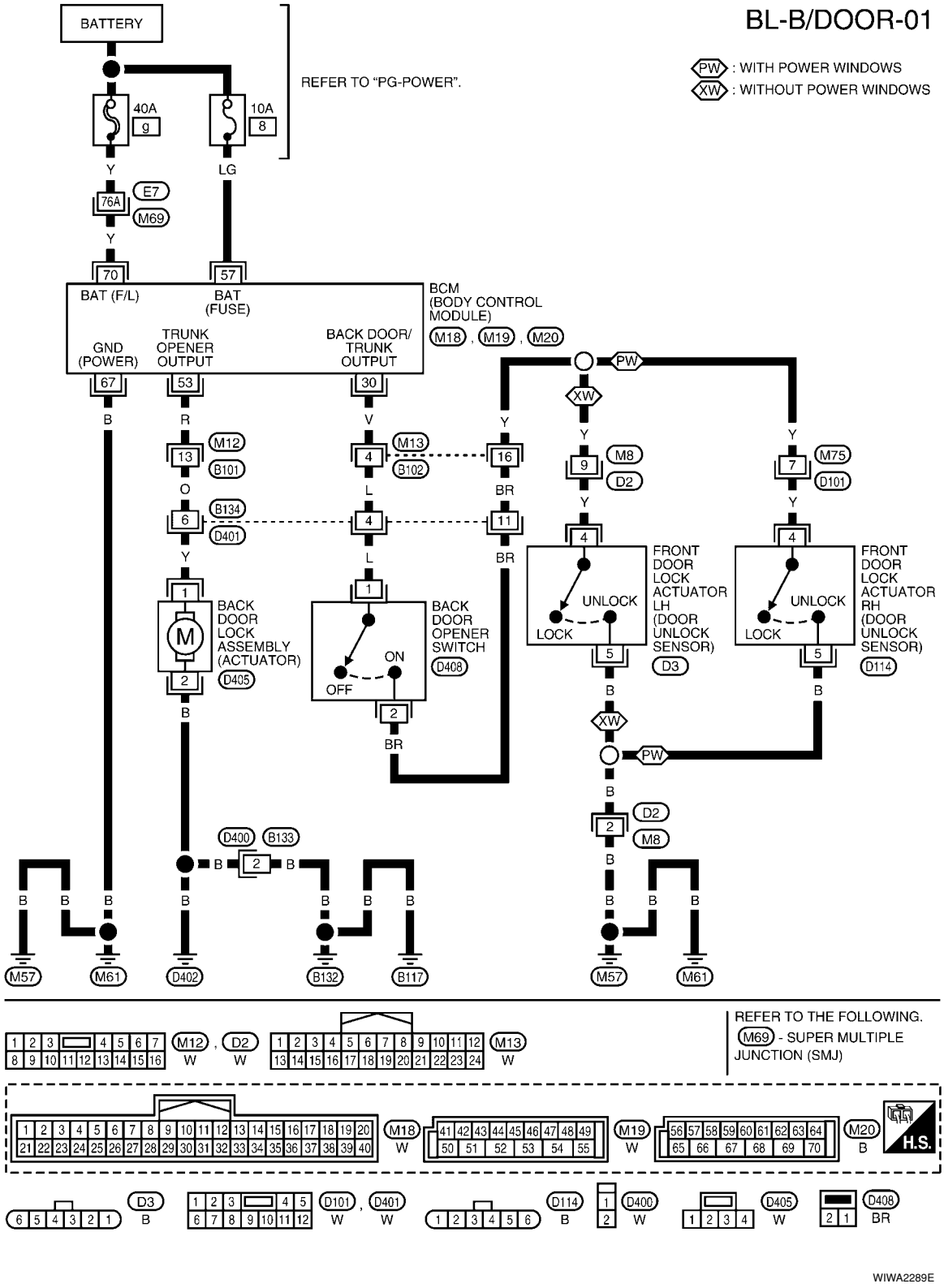

WITH INTELLIGENT KEY SYSTEM

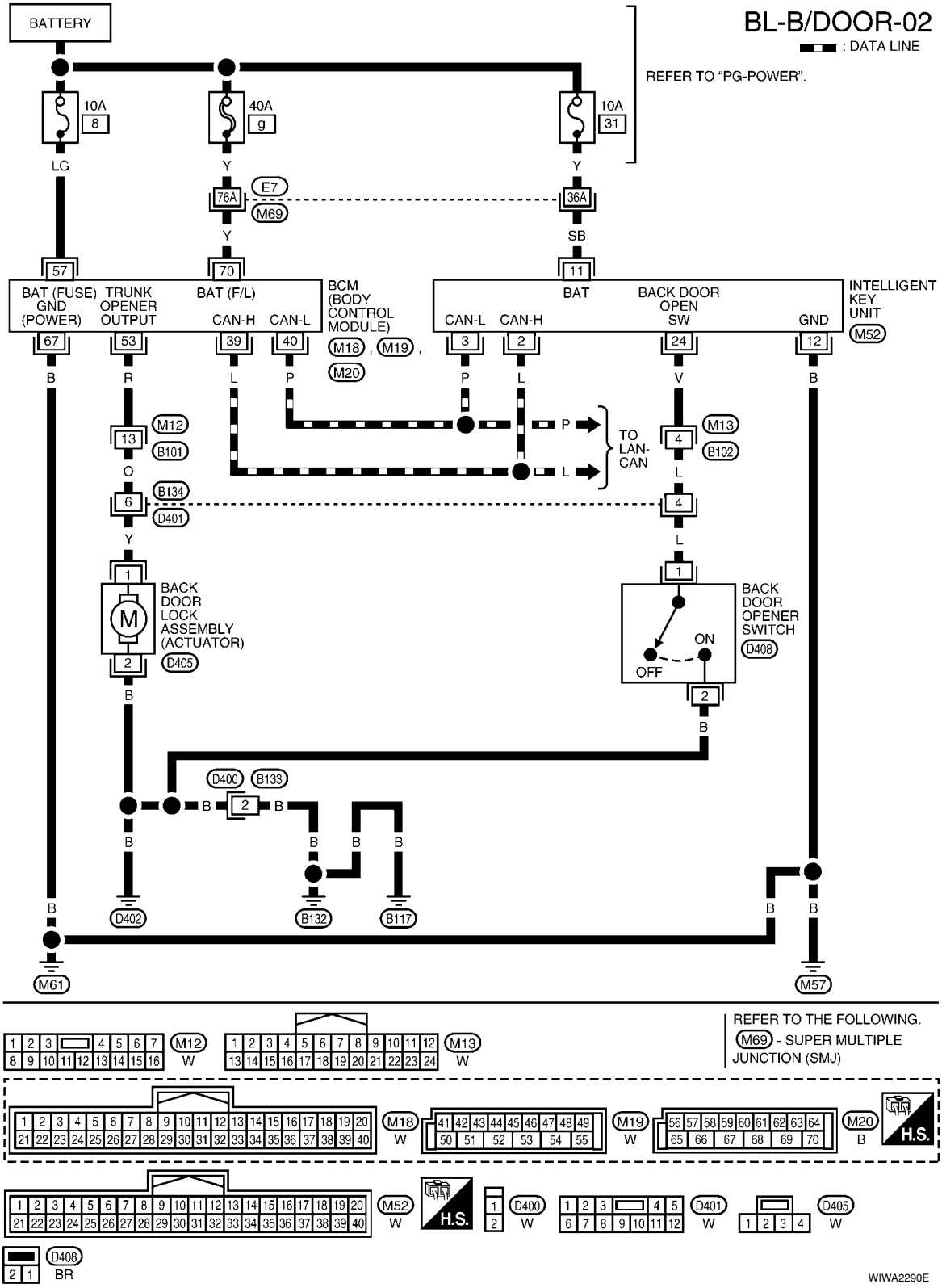

Terminal and Reference Value for BCM

INFOID:0000000001704054

Refer to BCS-11, "Terminal and Reference Value for BCM".

Terminal and Reference Value for Intelligent Key Unit

INFOID:0000000001704055

Refer to BL-96, "Terminal and Reference Value for Intelligent Key Unit".

CONSULT-III Function (BCM)

INFOID:0000000001704056

CONSULT-III can display each diagnostic item using the diagnostic test modes shown following.

BCM diagnostic test item	Diagnostic mode	Description
Inspection by part	WORK SUPPORT	Supports inspections and adjustments. Commands are transmitted to the BCM for setting the status suitable for required operation, input/output signals are received from the BCM and received date is displayed.
	DATA MONITOR	Displays BCM input/output data in real time.
	ACTIVE TEST	Operation of electrical loads can be checked by sending drive signal to them.
	SELF-DIAG RESULTS	Displays BCM self-diagnosis results.
	CAN DIAG SUPPORT MNTR	The result of transmit/receive diagnosis of CAN communication can be read.
	ECU PART NUMBER	BCM part number can be read.
	CONFIGURATION	Performs BCM configuration read/write functions.

CONSULT-III APPLICATION ITEMS

Data Monitor

Monitor item	Content
IGN ON SW	Indicates [ON/OFF] condition of ignition switch.
KEYLESS TRUNK**	This is displayed even when it is not equipped.
I-KEY TRUNK*	Momentarily indicates [ON/OFF] condition of back door open signal from back door opener switch.
TRNK OPNR SW**	Indicates [ON/OFF] condition of back door open signal from back door opener switch.
VEHICLE SPEED	This is displayed even when it is not equipped.

* : With Intelligent Key system
** : Without Intelligent Key system

Active Test

Test item	Content
TRUNK/BACK DOOR	This test is able to check back door lock assembly (actuator) unlock operation. Actuator opens back door lock assembly when “OPEN” on CONSULT-III screen is touched.

Work Flow

INFOID:0000000001704057

1. Check the symptom and customer's requests.
2. Understand the outline of system. Refer to BL-156, "System Description".
3. Repair or replace any malfunctioning parts. Refer to BL-159, "Trouble Diagnosis Chart by Symptom".
4. Does back door opener operate normally? If Yes, GO TO 5. If No, GO TO 3.
5. INSPECTION END

Trouble Diagnosis Chart by Symptom

INFOID:0000000001704058

Symptom	Diagnoses/service procedure	Reference page
Back door opener does not operate. (Without Intelligent Key or power windows)	1. Check BCM power supply and ground circuit.	BCS-15
	2. Check back door opener switch circuit.	BL-160
	3. Check back door lock assembly (actuator) circuit.	BL-166
	4. Replace BCM.	BCS-18

Symptom	Diagnoses/service procedure	Reference page
Back door opener does not operate. (Without Intelligent Key, with power windows)	1. Check BCM power supply and ground circuit.	BCS-15
	2. Check back door opener switch circuit.	BL-162
	3. Check back door lock assembly (actuator) circuit.	BL-166
	4. Replace BCM.	BCS-18
Back door opener does not operate. (With Intelligent Key)	1. Check BCM power supply and ground circuit.	BCS-15
	2. Check Intelligent Key power supply and ground circuit.	BL-110
	3. Check back door opener switch circuit.	BL-165
	4. Check back door lock assembly (actuator) circuit.	BL-166
	5. Replace BCM.	BCS-18

BCM Power Supply and Ground Circuit

INFOID:0000000001704059

Refer to BCS-15, "BCM Power Supply and Ground Circuit Inspection".

Check Back Door Opener Switch Circuit (Without Intelligent Key or Power Windows)

INFOID:0000000001704060

1. CHECK BACK DOOR OPENER SWITCH SIGNAL 1

With CONSULT-III

1. Insure front door lock knob LH is turned to the UNLOCK position.
2. Check back door opener switch (“TRNK OPNR SW”) in “DATA MONITOR” mode with CONSULT-III.

Test item	Condition
TRNK OPNR SW	Back door opener switch is pushed: ON
	Back door opener switch is released: OFF

Without CONSULT-III

1. Insure front door lock knob LH is turned to the UNLOCK position.
2. Check voltage between BCM connector M18 terminal 30 and ground.

Terminals			Door condition		Voltage (V) (Approx.)
(+)		(–)			
BCM connector	Terminal				
M18	30	Ground	Back door opener switch	Pushed	0
				Released	Battery voltage

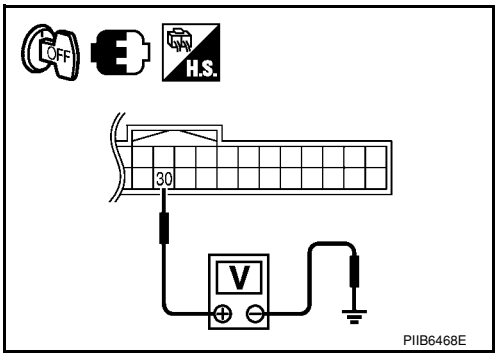

OK or NG

OK >> Back door opener switch is OK.
NG >> GO TO 2.

2. CHECK BACK DOOR OPENER SWITCH CIRCUIT 1

1. Turn ignition switch OFF.
2. Disconnect BCM and back door opener switch connector.
3. Check continuity between BCM connector (A) M18 terminal 30 and back door opener switch connector (B) terminal 1.

A		B		Continuity
BCM connector	Terminal	Back door opener switch connector	Terminal	
M18	30	D408	1	Yes

4. Check continuity between BCM connector (A) M18 terminal 30 and ground.

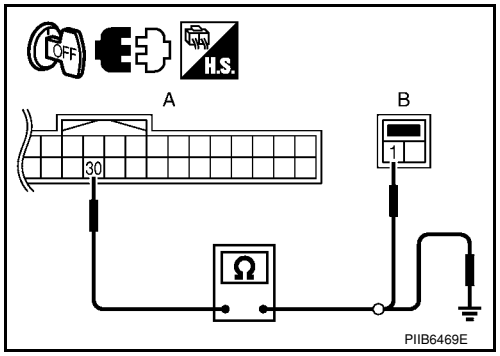

A		Ground	Continuity
BCM connector	Terminal		
M18	30		No

OK or NG

OK >> GO TO 3.
NG >> Repair or replace harness.

3. CHECK BACK DOOR OPENER SWITCH

Check continuity between back door opener switch terminals 1 and 2.

Terminal		Back door opener switch condition	Continuity
Back door opener switch			
1	2	Pushed	Yes
		Released	No

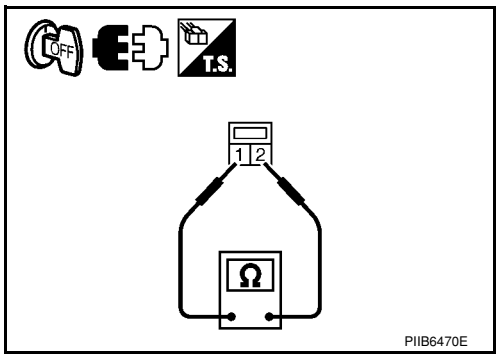

OK or NG

OK >> GO TO 4.
NG >> Replace back door opener switch.

4. CHECK BACK DOOR OPENER SWITCH CIRCUIT 2

1. Disconnect front door lock actuator LH (door unlock sensor) connector.
2. Check continuity between back door opener switch connector (A) D408 terminal 2 and front door lock actuator LH (door unlock sensor) connector (B) D3 terminal 4.

A		B		Continuity
Back door opener switch connector	Terminal	Front door lock actuator LH (door unlock sensor) connector	Terminal	
D408	2	D3	4	Yes

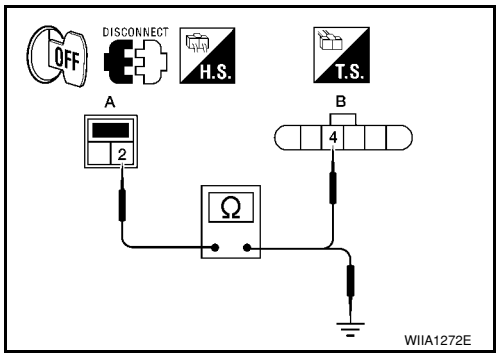

3. Check continuity between back door opener switch connector (A) D408 terminal 2 and ground.

Back door opener switch connector	Terminal	Ground	Continuity
D408	2		No

OK or NG

OK >> GO TO 5.
NG >> Repair or replace harness between back door opener switch and front door lock actuator LH (door unlock sensor).

5. CHECK FRONT DOOR LOCK ACTUATOR LH (DOOR UNLOCK SENSOR) GROUND CIRCUIT

Check continuity between front door lock actuator LH (door unlock sensor) connector terminal 5 and ground.

Front door lock actuator LH (door unlock sensor) connector	Terminal	Ground	Continuity
D3	5		Yes

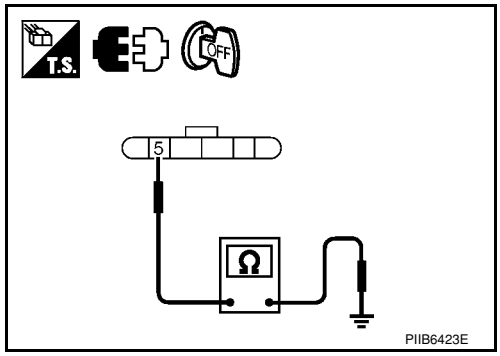

OK or NG

OK >> GO TO 6.
NG >> Repair or replace harness.

6. CHECK UNLOCK SENSOR FUNCTION

1. Connect front door lock actuator LH (door unlock sensor) connector.
2. Check continuity between back door opener switch connector D408 terminal 2 and ground.

Back door opener switch connector	Terminal		Front door lock knob LH position	Continuity
D408	2	Ground	Unlock	Yes
			Lock	No

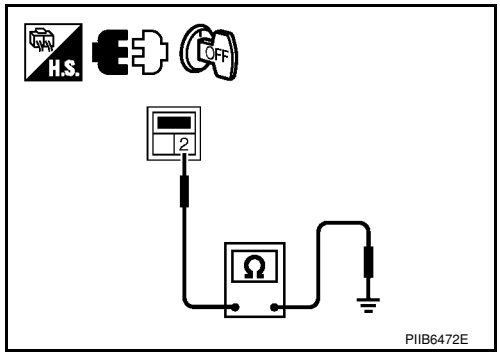

OK or NG

OK >> GO TO 7.
NG >> Replace front door lock actuator LH (door unlock sensor). Refer to BL-150.

7. CHECK BACK DOOR OPENER SWITCH SIGNAL 2

1. Connect BCM connector.
2. Check voltage between BCM connector M18 terminal 30 and ground.

Terminals			Voltage (V) (Approx.)
(+)		(–)	
BCM connector	Terminal		
M18	30	Ground	Battery voltage

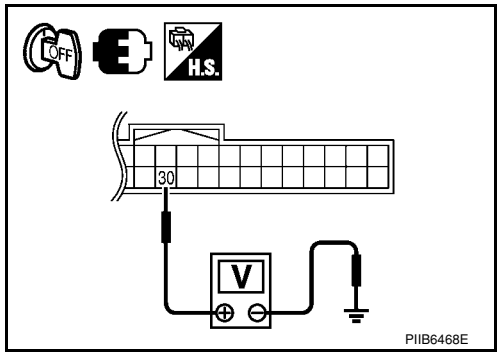

OK or NG

OK >> Check the condition of harness and connector.
NG >> Replace BCM. Refer to BCS-18, "Removal and Installation of BCM".

Check Back Door Opener Switch Circuit (Without Intelligent Key, with Power Windows)

INFOID:0000000001704061

1. CHECK BACK DOOR OPENER SWITCH SIGNAL 1

With CONSULT-III

1. Insure front door lock knob RH is turned to the UNLOCK position.
2. Check back door opener switch (“TRNK OPNR SW”) in “DATA MONITOR” mode with CONSULT-III.

Test item	Condition
TRNK OPNR SW	Back door opener switch is pushed: ON
	Back door opener switch is released: OFF

Without CONSULT-III

1. Insure front door lock knob RH is turned to the UNLOCK position.
2. Check voltage between BCM connector M18 terminal 30 and ground.

Terminals			Door condition		Voltage (V) (Approx.)
(+)		(–)			
BCM connector	Terminal				
M18	30	Ground	Back door opener switch	Pushed	0
				Released	Battery voltage

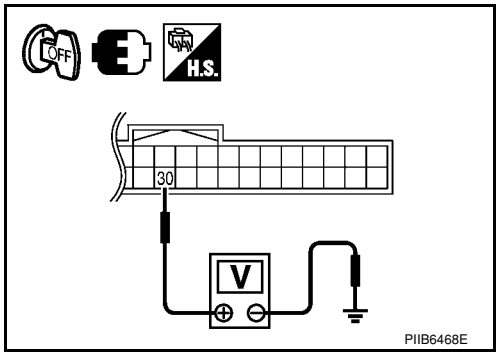

OK or NG

OK >> Back door opener switch is OK.
NG >> GO TO 2.

2. CHECK BACK DOOR OPENER SWITCH CIRCUIT 1

1. Turn ignition switch OFF.
2. Disconnect BCM and back door opener switch connector.
3. Check continuity between BCM connector (A) M18 terminal 30 and back door opener switch connector (B) terminal 1.

A		B		Continuity
BCM connector	Terminal	Back door opener switch connector	Terminal	
M18	30	D408	1	Yes

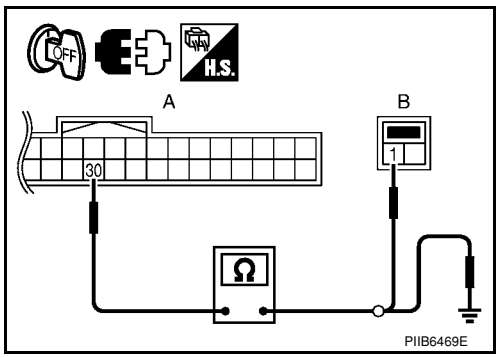

4. Check continuity between BCM connector (A) M18 terminal 30 and ground.

A		Ground	Continuity
BCM connector	Terminal		
M18	30		No

OK or NG

OK >> GO TO 3.
NG >> Repair or replace harness.

3. CHECK BACK DOOR OPENER SWITCH

Check continuity between back door opener switch terminals 1 and 2.

Terminal		Back door opener switch condition	Continuity
Back door opener switch			
1	2	Pushed	Yes
		Released	No

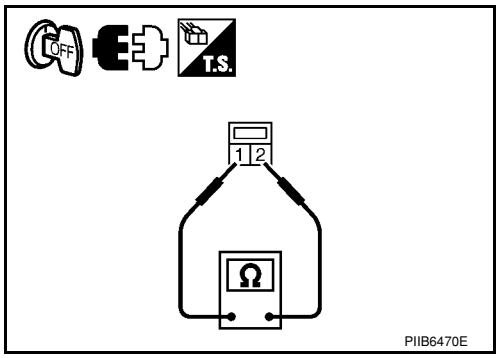

OK or NG

OK >> GO TO 4.
NG >> Replace back door opener switch.

4. CHECK BACK DOOR OPENER SWITCH CIRCUIT 2

1. Disconnect front door lock actuator RH (door unlock sensor) connector.
2. Check continuity between back door opener switch connector (A) D408 terminal 2 and front door lock actuator RH (door unlock sensor) connector (B) D114 terminal 4.

A		B		Continuity
Back door opener switch connector	Terminal	Front door lock actuator RH (door unlock sensor) connector	Terminal	
D408	2	D114	4	Yes

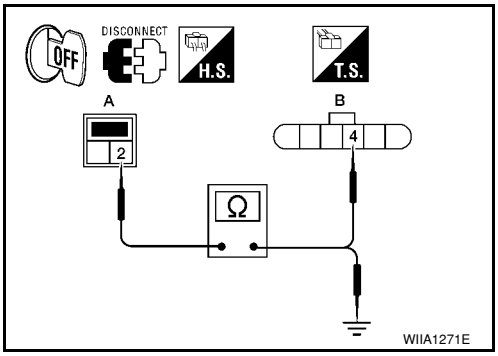

3. Check continuity between back door opener switch connector (A) D408 terminal 2 and ground.

Back door opener switch connector	Terminal	Ground	Continuity
D408	2		No

OK or NG

OK >> GO TO 5.
NG >> Repair or replace harness between back door opener switch and front door lock actuator RH (door unlock sensor).

5. CHECK FRONT DOOR LOCK ACTUATOR RH (DOOR UNLOCK SENSOR) GROUND CIRCUIT

Check continuity between front door lock actuator RH (door unlock sensor) connector terminal 5 and ground.

Front door lock actuator RH (door unlock sensor) connector	Terminal	Ground	Continuity
D114	5		Yes

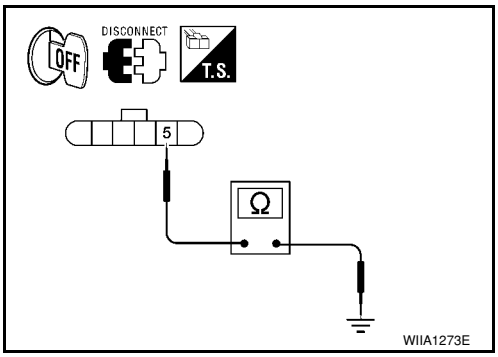

OK or NG

OK >> GO TO 6.
NG >> Repair or replace harness.

6. CHECK UNLOCK SENSOR FUNCTION

1. Connect front door lock actuator RH (door unlock sensor) connector.
2. Check continuity between back door opener switch connector D408 terminal 2 and ground.

Back door opener switch connector	Terminal		Front door lock knob RH position	Continuity
D408	2	Ground	Unlock	Yes
			Lock	No

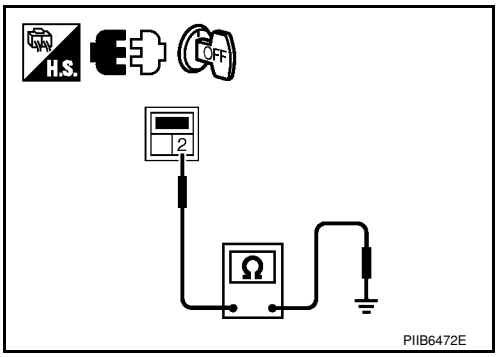

OK or NG

OK >> GO TO 7.
NG >> Replace front door lock actuator RH (door unlock sensor). Refer to BL-150.

7. CHECK BACK DOOR OPENER SWITCH SIGNAL 2

1. Connect BCM connector.
2. Check voltage between BCM connector and ground.

Terminals			Voltage (V) (Approx.)
(+)		(–)	
BCM connector	Terminal		
M18	30	Ground	Battery voltage

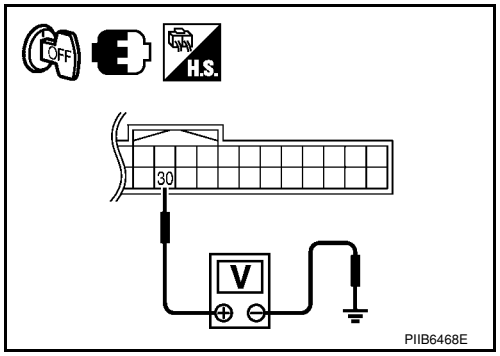

OK or NG

OK >> Check the condition of harness and connector.
NG >> Replace BCM. Refer to BCS-18, "Removal and Installation of BCM".

Check Back Door Opener Switch Circuit (With Intelligent Key)

INFOID:0000000001704062

1. CHECK BACK DOOR OPENER SWITCH SIGNAL

With CONSULT-III

Check back door opener switch ("I-KEY TRNK") in "DATA MONITOR" mode with CONSULT-III.

Test item	Condition
I-KEY TRNK	Back door opener switch is pushed: ON (momentarily)
	Back door opener switch is released: OFF

Without CONSULT-III

Check voltage between Intelligent Key unit connector M52 terminal 24 and ground.

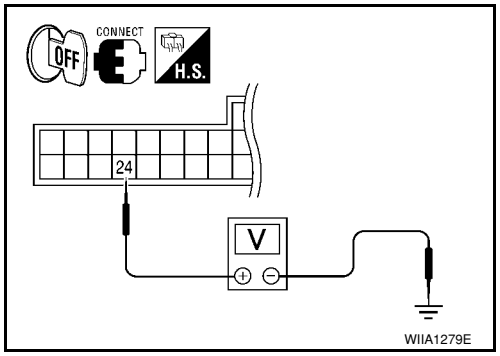

Terminals			Door condition		Voltage (V) (Approx.)
(+)		(–)			
Intelligent Key unit connector	Terminal				
M52	24	Ground	Back door opener switch	Pushed	0
				Released	5

OK or NG

OK >> Back door opener switch is OK.
NG >> GO TO 2.

2. CHECK BACK DOOR OPENER SWITCH CIRCUIT 1

1. Turn ignition switch OFF.
2. Disconnect Intelligent Key unit and back door opener switch connector.
3. Check continuity between Intelligent Key unit connector (A) M52 terminal 24 and back door opener switch connector (B) terminal 1.

A		B		Continuity
Intelligent Key unit connector	Terminal	Back door opener switch connector	Terminal	
M52	24	D408	1	Yes

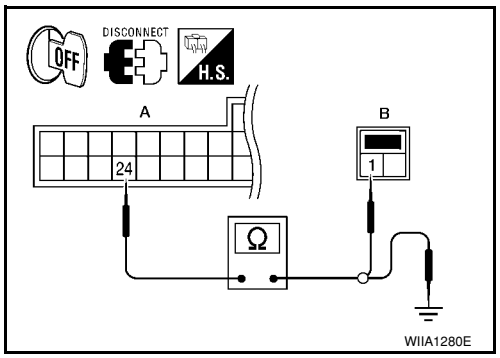

4. Check continuity between Intelligent Key unit connector (A) M52 terminal 24 and ground.

A		Ground	Continuity
Intelligent Key unit connector	Terminal		
M52	24		No

OK or NG

OK >> GO TO 3.
NG >> Repair or replace harness.

3. CHECK BACK DOOR OPENER SWITCH

Check continuity between back door opener switch terminals 1 and 2.

Terminal		Back door opener switch condition	Continuity
Back door opener switch			
1	2	Pushed	Yes
		Released	No

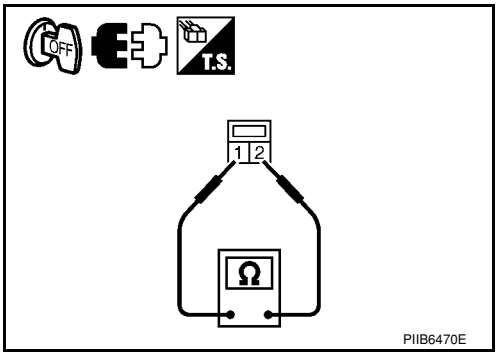

OK or NG

OK >> GO TO 4.
NG >> Replace back door opener switch.

4. CHECK BACK DOOR OPENER SWITCH GROUND CIRCUIT

Check continuity between back door opener switch connector terminal 2 and ground.

Back door opener switch connector	Terminal	Ground	Continuity
D408	2		Yes

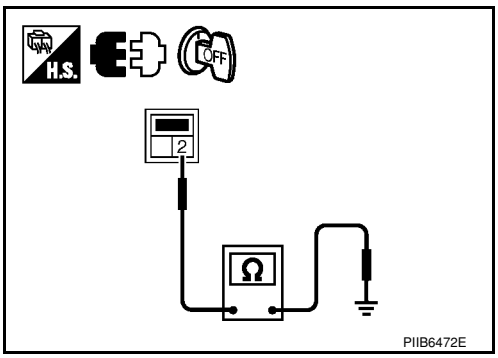

OK or NG

OK >> GO TO 5.
NG >> Repair or replace harness.

5. CHECK INTELLIGENT KEY UNIT OUTPUT SIGNAL

1. Connect Intelligent Key unit connector.
2. Check voltage between Intelligent Key unit connector M52 terminal 24 and ground.

Terminals			Voltage (V) (Approx.)
(+)		(–)	
Intelligent Key unit connector	Terminal		
M52	24	Ground	5

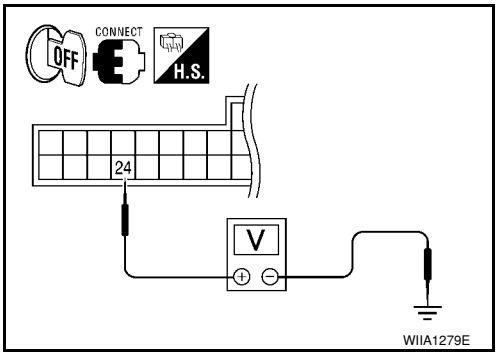

OK or NG

OK >> Check the condition of harness and connector.
NG >> Replace Intelligent Key unit. Refer to BL-142, "Removal and Installation of Intelligent Key Unit".

Check Back Door Lock Assembly (Actuator) Circuit

INFOID:0000000001704063

1. CHECK BACK DOOR LOCK ASSEMBLY (ACTUATOR) FUNCTION

With CONSULT-III

Check the operation with (“TRUNK/BACK DOOR”) in the ACTIVE TEST.

Does back door actuator system operate normally?

YES or NO

YES >> Back door lock assembly (actuator) is OK.
NO >> GO TO 2.

2. CHECK BACK DOOR LOCK ASSEMBLY (ACTUATOR) POWER SUPPLY

1. Turn ignition switch OFF.
2. Insure both front door lock knobs are turned to the UNLOCK position.
3. Disconnect back door lock assembly (actuator) connector.
4. Check voltage between back door lock assembly (actuator) connector D405 terminal 1 and ground.

Terminals			Condition		Voltage (V) (Approx.)
(+)		(–)			
Back door lock assembly (actuator) connector	Terminal				
D405	1	Ground	Back door opener switch	Pushed	0 ↓ Battery voltage ↓ 0
				Released	0

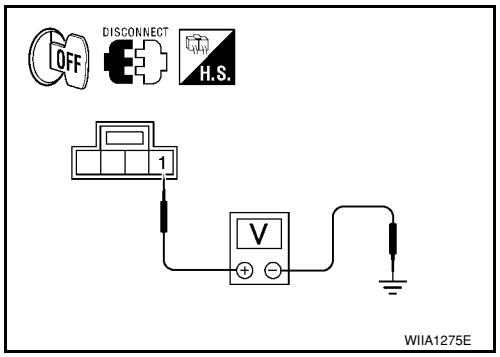

OK or NG

OK >> GO TO 3.
NG >> GO TO 4.

3. CHECK BACK DOOR LOCK ASSEMBLY (ACTUATOR) GROUND CIRCUIT

Check continuity between back door lock assembly (actuator) connector D405 terminal 2 and ground.

Back door lock assembly (actuator) connector	Terminal	Ground	Continuity
D405	2		Yes

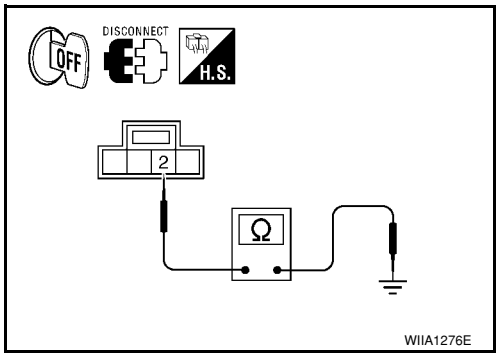

OK or NG

OK >> Replace back door lock assembly (actuator). Refer to BL-156.
NG >> Repair or replace harness.

4. CHECK BACK DOOR LOCK ASSEMBLY (ACTUATOR) CIRCUIT

1. Disconnect BCM connector.
2. Check continuity between BCM connector (A) M19 terminal 53 and back door lock assembly (actuator) connector (B) D405 terminal 1.

A		B		Continuity
BCM connector	Terminal	Back door opener actuator connector	Terminal	
M19	53	D405	1	Yes

3. Check continuity between BCM connector (A) M19 terminal 53 and ground.

BCM connector	Terminal	Ground	Continuity
M19	53		No

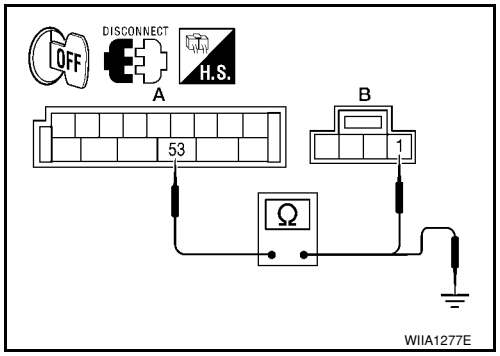

OK or NG

OK >> GO TO 5.
NG >> Repair or replace harness between BCM and back door lock assembly (actuator).

5. CHECK BCM OUTPUT SIGNAL

1. Connect BCM connector.
2. Check voltage between BCM connector M19 terminal 53 and ground.

Terminals			Condition		Voltage (V) (Approx.)
(+)		(–)			
BCM connector	Terminal				
M19	53	Ground	Back door opener switch	Pushed	0 ↓ Battery voltage ↓ 0
				Released	0

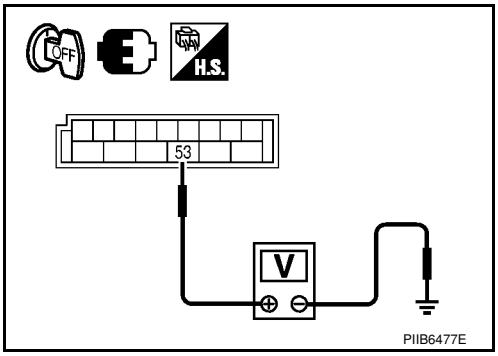

OK or NG

OK >> Check the condition of harness and connector.
NG >> Replace BCM. Refer to BCS-18, "Removal and Installation of BCM".

Removal and Installation

INFOID:0000000001704064

BACK DOOR LOCK

Removal

1. Remove the back door finisher lower. Refer to EI-36.
2. Remove the bolts, disconnect the electrical connector and separate the lock from the door.

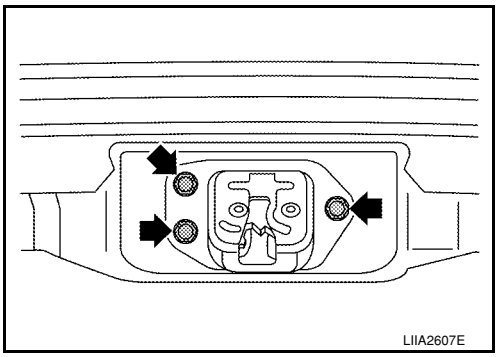

Installation
Installation is in the reverse order of removal.

BACK DOOR HANDLE

Removal

1. Remove the back door finisher lower. Refer to EI-36.
2. Disconnect the harness connectors (1), remove the nuts and the back door handle (A).

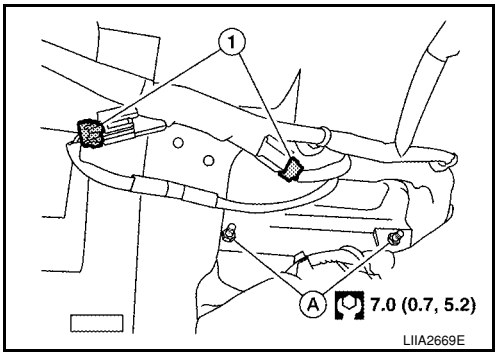

3. Release the clips and remove the switch from the housing.

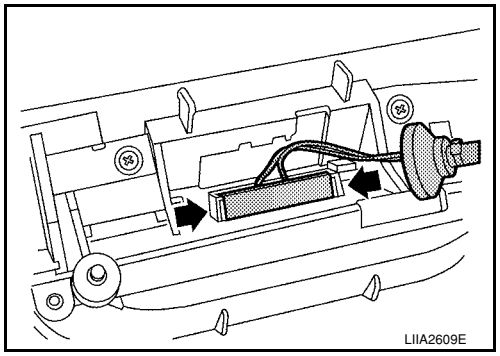

Installation

Installation is in the reverse order of removal.

TRUNK LID

Fitting Adjustment

INFOID:0000000001704065

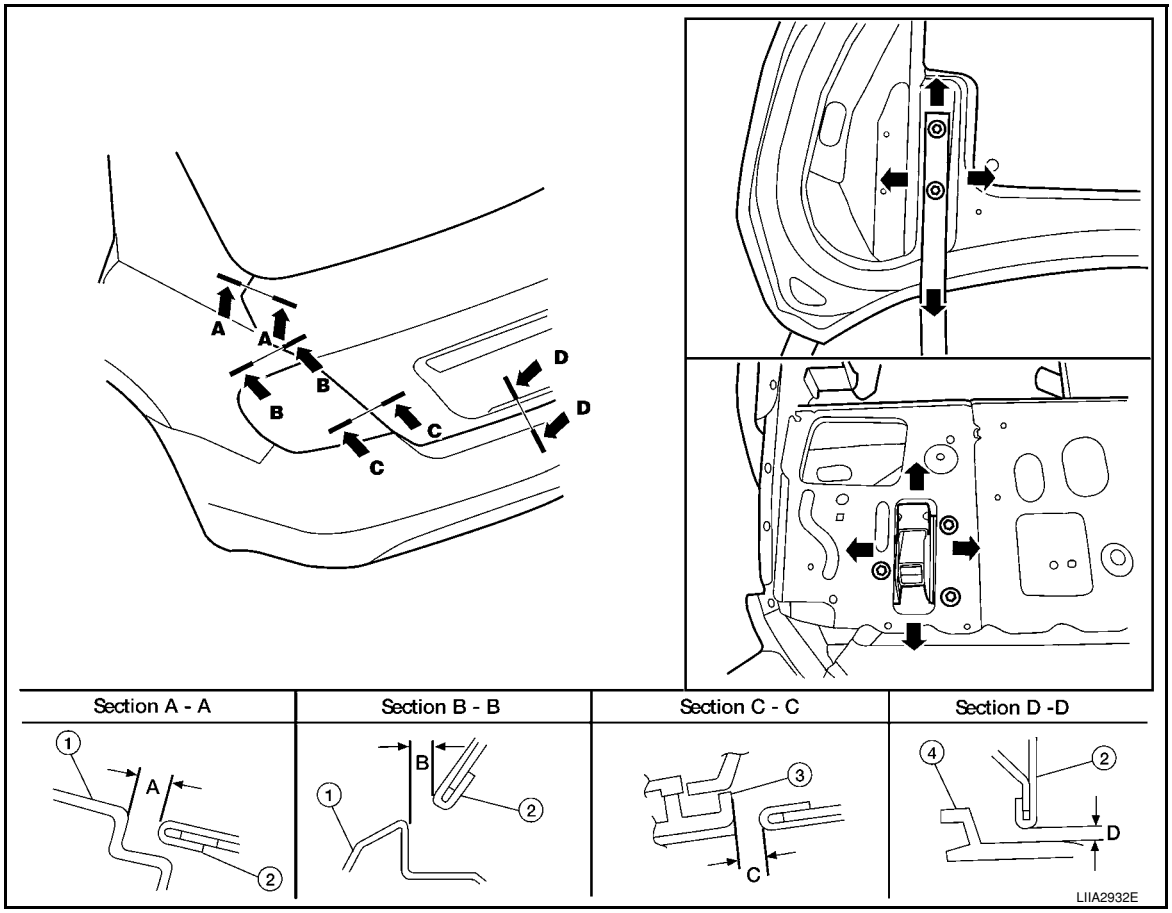

1. Rear fender	2. Trunk lid	3. Rear combination lamp
4. Rear bumper fascia	a. 4.0 ± 1.0 mm (0.16 ± 0.04 in)	b. 3.5 ± 1.0 mm (0.14 ± 0.04 in)
c. 4.5 ± 1.7 mm (0.03 ± 0.06 in)	d. 7.0 ± 2.2 mm (0.28 ± 0.09 in)	

Longitudinal and lateral clearance adjustment

1. With the striker released, loosen the trunk lid hinge nuts and close the trunk lid.
2. Make the lateral clearance and the clearance to the rear window glass equal. Then open the trunk lid to tighten the nuts.

Surface height adjustment

1. Loosen the striker bolts. Raise the striker to the top position, and temporarily tighten the upper bolt.
2. Close the trunk lid lightly and adjust the surface height. Then open the trunk lid and tighten the striker bolts.

Trunk Lid Assembly

INFOID:0000000001704066

REMOVAL

1. Remove the trunk lid finisher. Refer to EI-53 .
2. Remove the trunk lid wire harness.

3. Remove the nuts (a) and the trunk lid assembly (1).

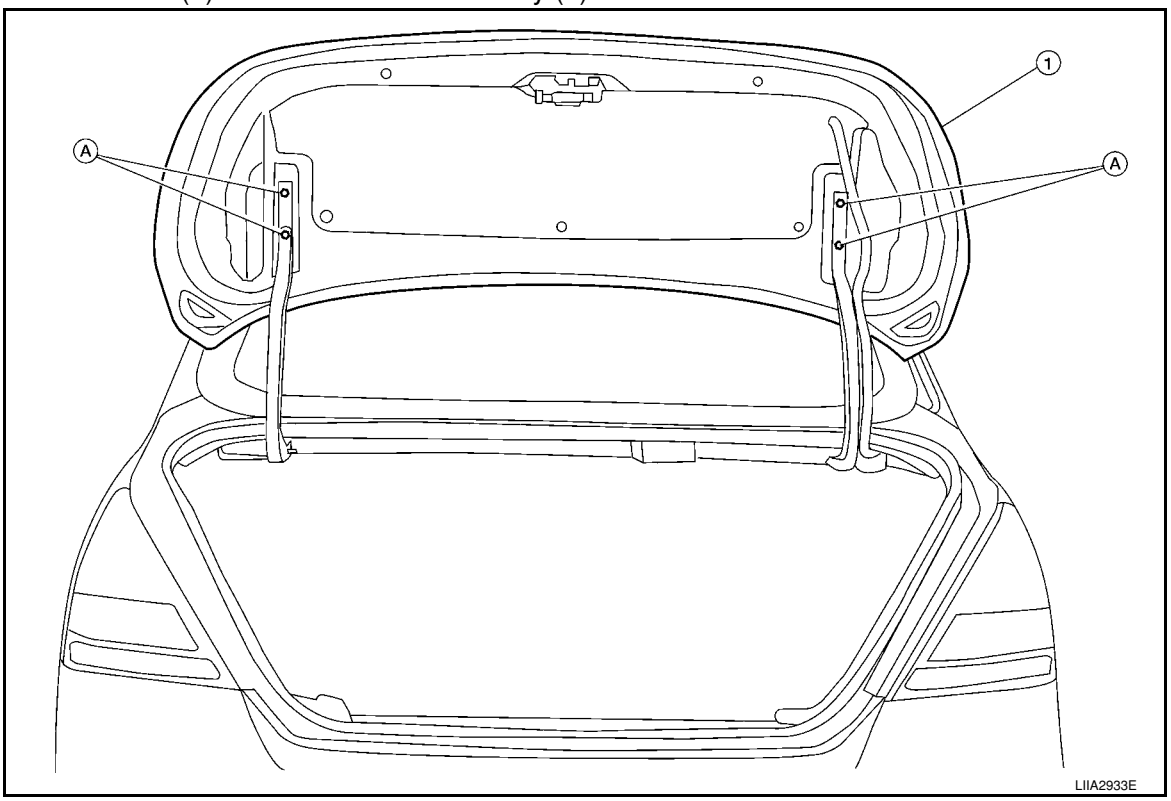

INSTALLATION

Installation is in the reverse order of removal.

CAUTION:

After installing, apply touch-up paint (body color) to the head of the hinge nuts.

Trunk Lid Lock

INFOID:0000000001704067

REMOVAL

1. Remove the trunk lid finisher. Refer to EI-53.
2. If equipped, disconnect the trunk lid lock cylinder rod.
3. Remove the release cable.
4. Disconnect the electrical connector (a), remove the bolts (b) and the trunk lid lock (1).

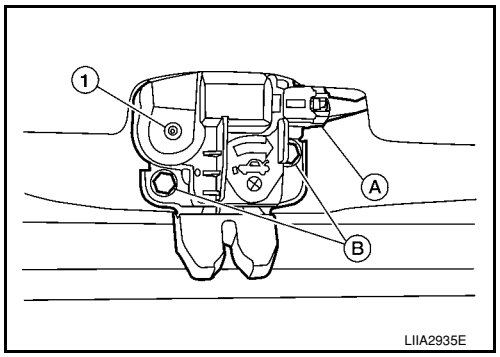

INSTALLATION

Installation is in the reverse order of removal.

Trunk Lid Striker

INFOID:0000000001704068

REMOVAL

1. Remove the trunk rear plate and trunk rear finisher. Refer to EI-53.
2. Remove the bolts, disconnect the electrical connector and remove the trunk lock actuator.
3. Remove the bolt and disconnect the trunk lid release cable.

4. Remove the bolts (a) and the trunk lid striker (1).

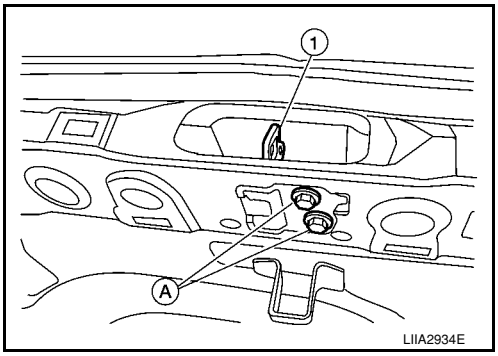

INSTALLATION

Installation is in the reverse order of removal.

TRUNK LID OPENER

Component Parts and Harness Connector Location

INFOID:0000000001704069

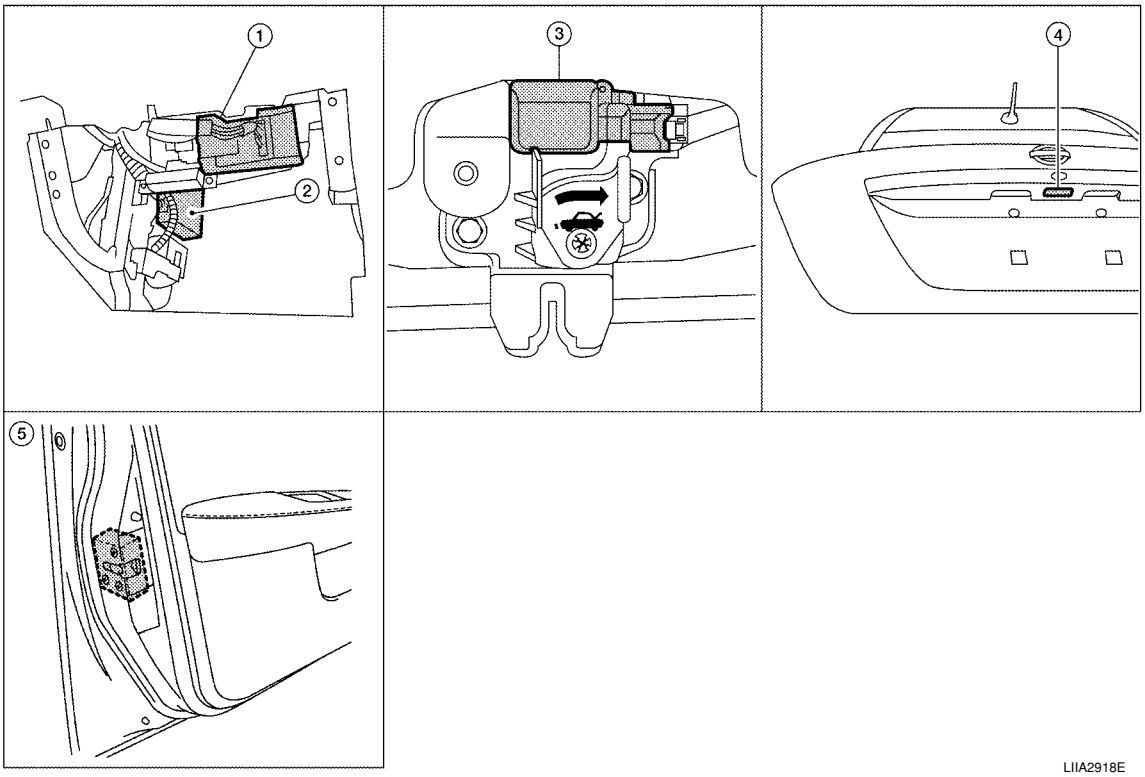

LIIA2918E

1. BCM M18, M19, M20 (view with glove box removed)
2. Intelligent Key unit M52 (with Intelligent Key)
3. Lamp switch and trunk release solenoid B127
4. Trunk lid opener switch B128
5. Front door lock actuator (door unlock sensor) LH D3, RH D114

System Description

INFOID:0000000001704070

Power is supplied at all times
- through 40A fusible link (letter **g,** located in fuse and fusible link box)
- to BCM terminal 70
- through 10A fuse [No. 8, located in fuse block (J/B)]
- to BCM terminal 57
- through 10A fuse [No. 31, located in fuse block (J/B)]
- to Intelligent Key unit terminal 11 (with Intelligent Key).

Ground is supplied
- to BCM terminal 67 and
- to Intelligent Key unit terminal 12 (with Intelligent Key)
- through body grounds M57 and M61.

When trunk lid opener switch is ON (pushed), ground is supplied
- to BCM terminal 30 (without Intelligent Key)
- through trunk lid opener switch terminals 1 and 2
- through front door lock actuator LH (door unlock sensor) terminals 4 and 5 (without power windows) or
- through front door lock actuator RH (door unlock sensor) terminals 4 and 5 (with power windows)
- through body grounds M57 and M61
- to Intelligent Key unit terminal 24 (with Intelligent Key)
- through trunk lid opener switch terminals 1 and 2
- through body grounds B117 and B132.

Then power is supplied
- through BCM terminal 53
- to trunk lamp switch and trunk release solenoid terminal 2.

Ground is supplied

- to trunk lamp switch and trunk release solenoid terminal 1
- through body grounds B117 and B132.

Then BCM operates trunk lamp switch and trunk release solenoid.

Wiring Diagram - TLID -

INFOID:0000000001704071

WITHOUT INTELLIGENT KEY SYSTEM

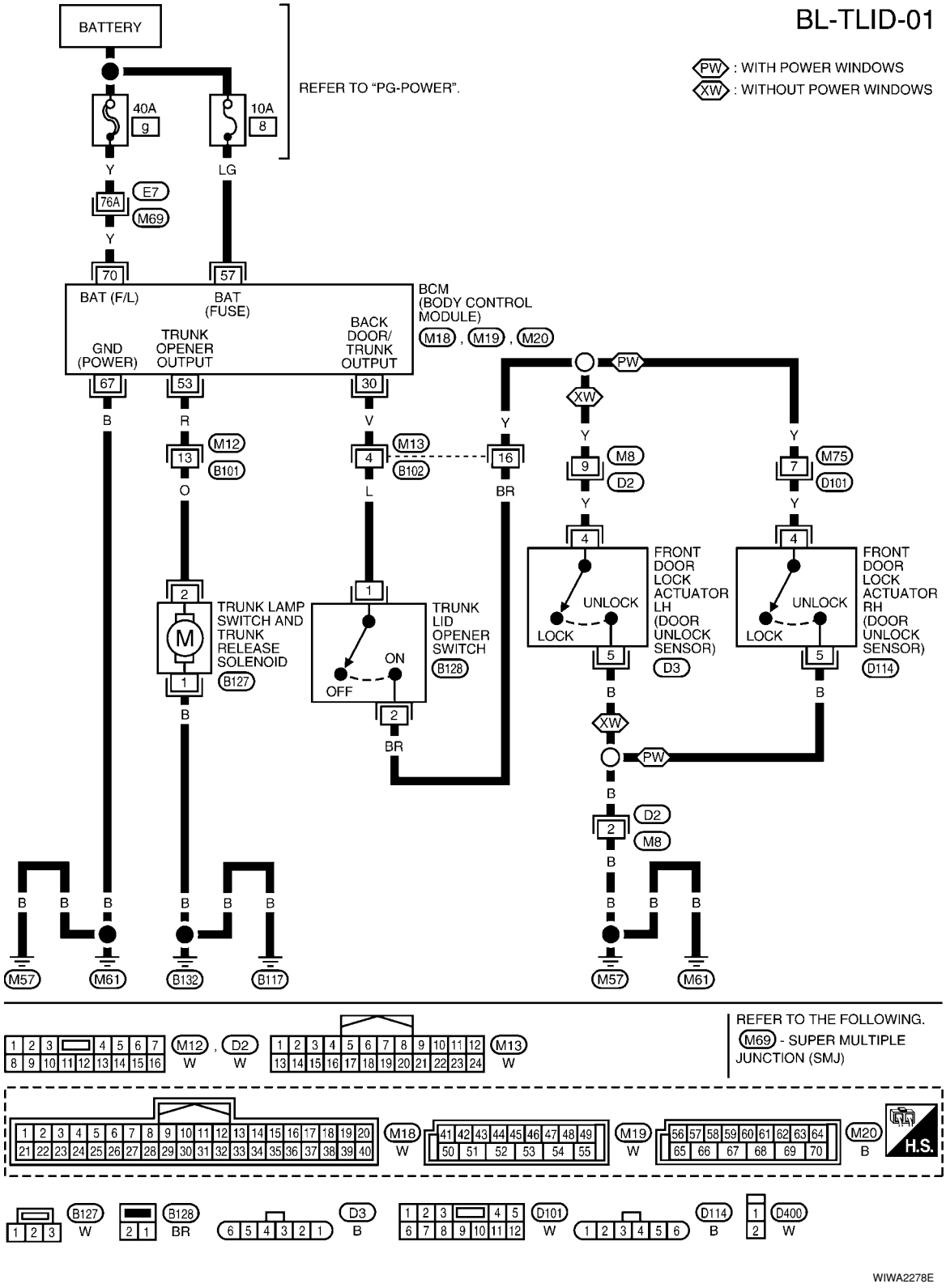

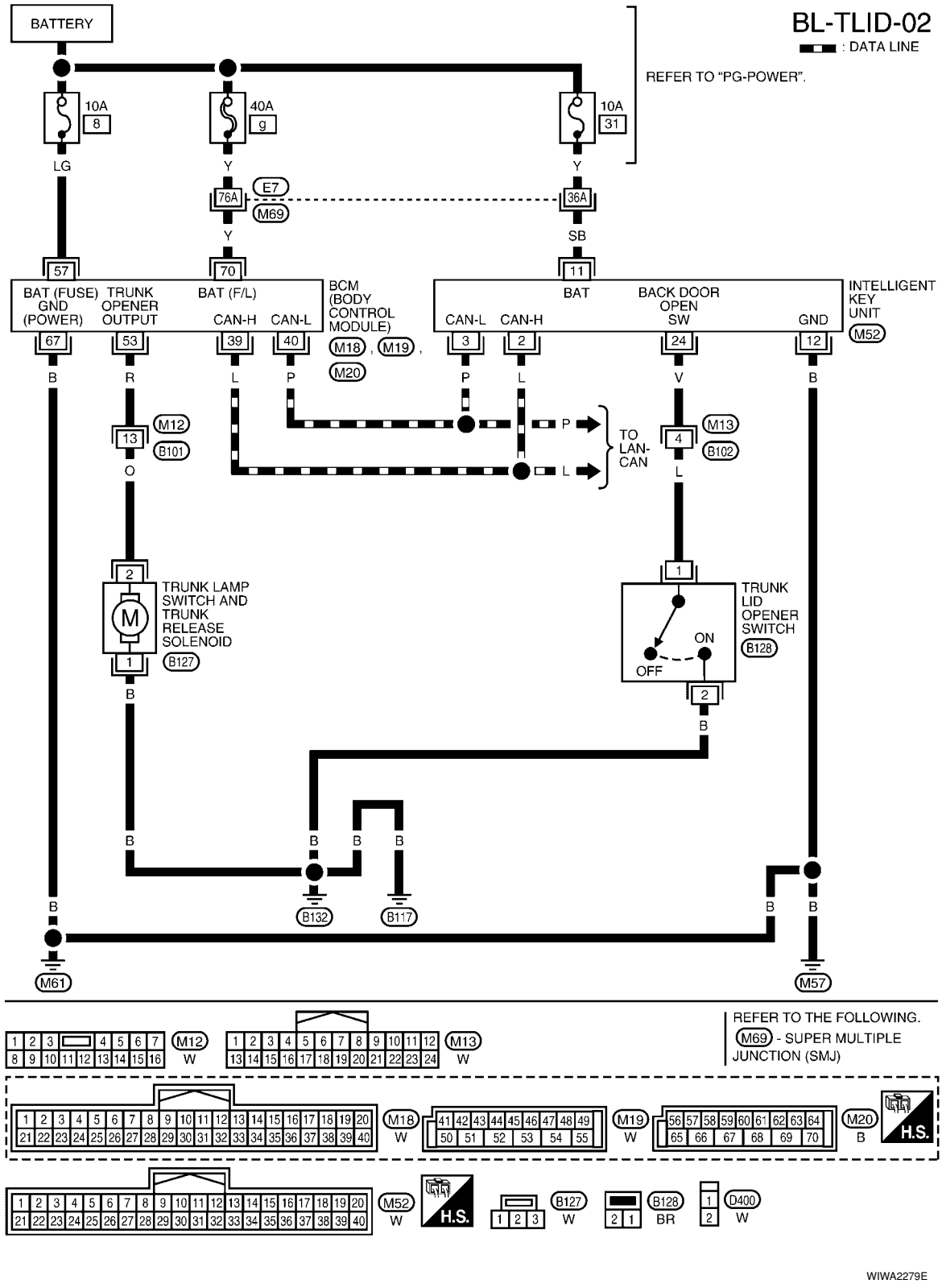

Terminal and Reference Value for BCM

INFOID:0000000001704072

Refer to BCS-11, "Terminal and Reference Value for BCM".

Terminal and Reference Value for Intelligent Key Unit

INFOID:0000000001704073

Refer to BL-96, "Terminal and Reference Value for Intelligent Key Unit".

CONSULT-III Function (BCM)

INFOID:0000000001704074

CONSULT-III can display each diagnostic item using the diagnostic test modes shown following.

BCM diagnostic test item	Diagnostic mode	Description
Inspection by part	WORK SUPPORT	Supports inspections and adjustments. Commands are transmitted to the BCM for setting the status suitable for required operation, input/output signals are received from the BCM and received date is displayed.
	DATA MONITOR	Displays BCM input/output data in real time.
	ACTIVE TEST	Operation of electrical loads can be checked by sending drive signal to them.
	SELF-DIAG RESULTS	Displays BCM self-diagnosis results.
	CAN DIAG SUPPORT MNTR	The result of transmit/receive diagnosis of CAN communication can be read.
	ECU PART NUMBER	BCM part number can be read.
	CONFIGURATION	Performs BCM configuration read/write functions.

CONSULT-III APPLICATION ITEMS

Data Monitor

Monitor item	Content
IGN ON SW	Indicates [ON/OFF] condition of ignition switch.
KEYLESS TRUNK**	This is displayed even when it is not equipped.
I-KEY TRUNK*	Momentarily indicates [ON/OFF] condition of trunk open signal from trunk lid opener switch.
TRNK OPNR SW	Indicates [ON/OFF] condition of trunk open signal from trunk lid opener switch.
VEHICLE SPEED	This is displayed even when it is not equipped.

* : With Intelligent Key system

** : Without Intelligent Key system

Active Test

Test item	Content
TRUNK/BACK DOOR	This test is able to check trunk lid lock assembly (actuator) unlock operation. Actuator opens trunk lid lock assembly when “OPEN” on CONSULT-III screen is touched.

Work Flow

INFOID:0000000001704075

1. Check the symptom and customer's requests.
2. Understand the outline of system. Refer to BL-173, "System Description".
3. Repair or replace any malfunctioning parts. Refer to BL-176, "Trouble Diagnosis Chart by Symptom".
4. Does trunk lid opener operate normally? If Yes, GO TO 5. If No, GO TO 3.
5. INSPECTION END

Trouble Diagnosis Chart by Symptom

INFOID:0000000001704076

Symptom	Diagnoses/service procedure	Reference page
Trunk lid opener does not operate. (Without Intelligent Key or power windows)	1. Check BCM power supply and ground circuit.	BCS-15
	2. Check trunk lid opener switch circuit.	BL-177
	3. Check trunk lid lock assembly (actuator) circuit.	BL-183
	4. Replace BCM.	BCS-18

Symptom	Diagnoses/service procedure	Reference page
Trunk lid opener does not operate. (Without Intelligent Key, with power windows)	1. Check BCM power supply and ground circuit.	BCS-15
	2. Check trunk lid opener switch circuit.	BL-179
	3. Check trunk lid lock assembly (actuator) circuit.	BL-183
	4. Replace BCM.	BCS-18
Trunk lid opener does not operate. (With Intelligent Key)	1. Check BCM power supply and ground circuit.	BCS-15
	2. Check Intelligent Key power supply and ground circuit.	BL-110
	3. Check trunk lid opener switch circuit.	BL-182
	4. Check trunk lid lock assembly (actuator) circuit.	BL-183
	5. Replace BCM.	BCS-18

BCM Power Supply and Ground Circuit

INFOID:0000000001704077

Refer to BCS-15, "BCM Power Supply and Ground Circuit Inspection".

Check Trunk Lid Opener Switch Circuit (Without Intelligent Key or Power Windows)

INFOID:0000000001704078

1. CHECK TRUNK LID OPENER SWITCH SIGNAL 1

With CONSULT-III

1. Insure front door lock knob LH is turned to the UNLOCK position.
2. Check trunk lid opener switch (“TRNK OPNR SW”) in “DATA MONITOR” mode with CONSULT-III.

Test item	Condition
TRNK OPNR SW	Trunk lid opener switch is pushed: ON
	Trunk lid opener switch is released: OFF

Without CONSULT-III

1. Insure front door lock knob LH is turned to the UNLOCK position.
2. Check voltage between BCM connector M18 terminal 30 and ground.

Terminals			Door condition		Voltage (V) (Approx.)
(+)		(–)			
BCM connector	Terminal				
M18	30	Ground	Trunk lid opener switch	Pushed	0
				Released	Battery voltage

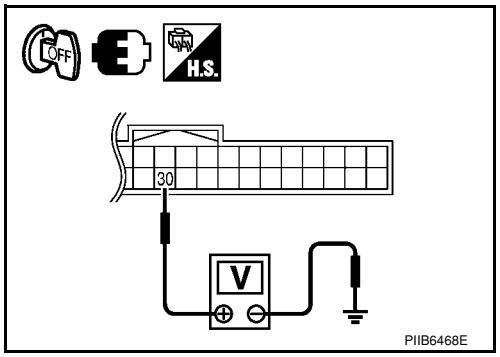

OK or NG

OK >> Trunk lid opener switch is OK.
NG >> GO TO 2.

2. CHECK TRUNK LID OPENER SWITCH CIRCUIT 1

1. Turn ignition switch OFF.
2. Disconnect BCM and trunk lid opener switch connector.
3. Check continuity between BCM connector (A) M18 terminal 30 and trunk lid opener switch connector B128 (B) terminal 1.

A		B		Continuity
BCM connector	Terminal	Trunk lid opener switch connector	Terminal	
M18	30	B128	1	Yes

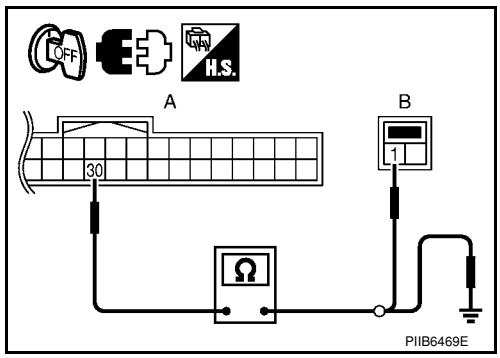

4. Check continuity between BCM connector (A) M18 terminal 30 and ground.

A		Ground	Continuity
BCM connector	Terminal		
M18	30		No

OK or NG

OK >> GO TO 3.
NG >> Repair or replace harness.

3. CHECK TRUNK LID OPENER SWITCH

Check continuity between trunk lid opener switch terminals 1 and 2.

Terminal		Trunk lid opener switch condition	Continuity
Trunk lid opener switch			
1	2	Pushed	Yes
		Released	No

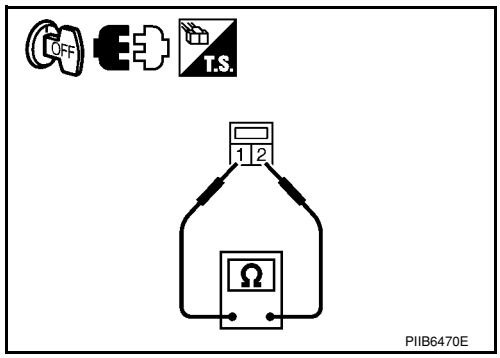

OK or NG

OK >> GO TO 4.
NG >> Replace trunk lid opener switch.

4. CHECK TRUNK LID OPENER SWITCH CIRCUIT 2

1. Disconnect front door lock actuator LH (door unlock sensor) connector.
2. Check continuity between trunk lid opener switch connector (A) B128 terminal 2 and front door lock actuator LH (door unlock sensor) connector (B) D3 terminal 4.

A		B		Continuity
Trunk lid opener switch connector	Terminal	Front door lock actuator LH (door unlock sensor) connector	Terminal	
B128	2	D3	4	Yes

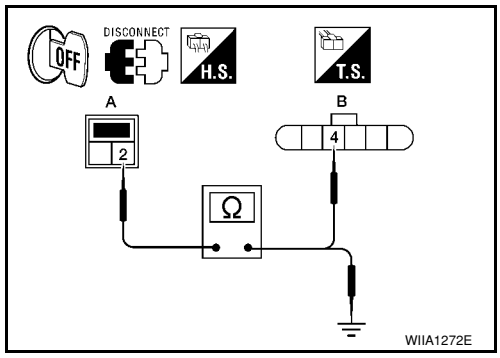

3. Check continuity between trunk lid opener switch connector (A) B128 terminal 2 and ground.

Trunk lid opener switch connector	Terminal	Ground	Continuity
B128	2		No

OK or NG

OK >> GO TO 5.
NG >> Repair or replace harness between trunk lid opener switch and front door lock actuator LH (door unlock sensor).

5. CHECK FRONT DOOR LOCK ACTUATOR LH (DOOR UNLOCK SENSOR) GROUND CIRCUIT

Check continuity between front door lock actuator LH (door unlock sensor) connector terminal 5 and ground.

Front door lock actuator LH (door unlock sensor) connector	Terminal	Ground	Continuity
D3	5		Yes

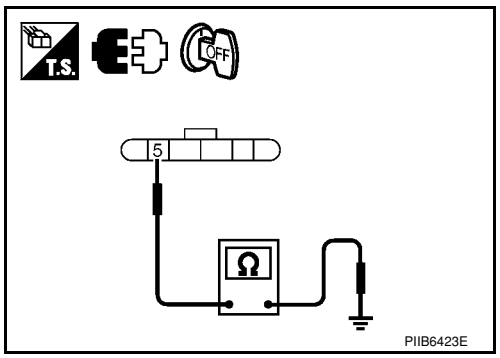

OK or NG

OK >> GO TO 6.
NG >> Repair or replace harness.

6. CHECK UNLOCK SENSOR FUNCTION

1. Connect front door lock actuator LH (door unlock sensor) connector.
2. Check continuity between trunk lid opener switch connector B128 terminal 2 and ground.

Trunk lid opener switch connector	Terminal		Front door lock knob LH position	Continuity
B128	2	Ground	Unlock	Yes
			Lock	No

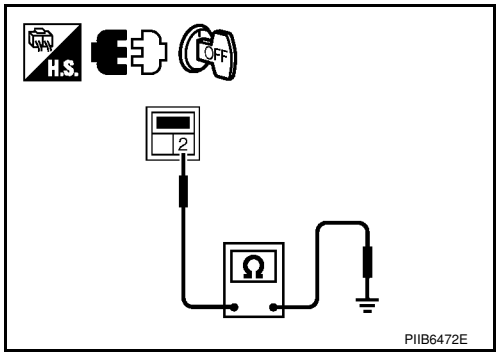

OK or NG

OK >> GO TO 7.
NG >> Replace front door lock actuator LH (door unlock sensor). Refer to BL-150.

7. CHECK TRUNK LID OPENER SWITCH SIGNAL 2

1. Connect BCM connector.
2. Check voltage between BCM connector M18 terminal 30 and ground.

Terminals			Voltage (V) (Approx.)
(+)		(–)	
BCM connector	Terminal		
M18	30	Ground	Battery voltage

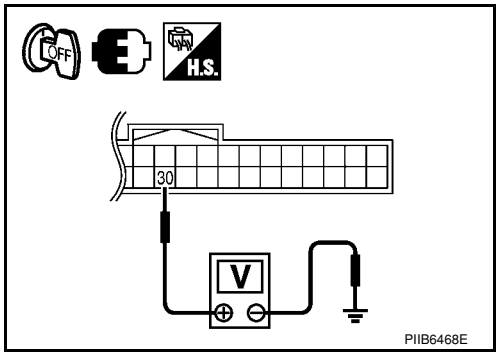

OK or NG

OK >> Check the condition of harness and connector.
NG >> Replace BCM. Refer to BCS-18, "Removal and Installation of BCM".

Check Trunk Lid Opener Switch Circuit (Without Intelligent Key, with Power Windows)

INFOID:0000000001704079

1. CHECK TRUNK LID OPENER SWITCH SIGNAL 1

With CONSULT-III

1. Insure front door lock knob RH is turned to the UNLOCK position.
2. Check trunk lid opener switch (“TRNK OPNR SW”) in “DATA MONITOR” mode with CONSULT-III.

Test item	Condition
TRNK OPNR SW	Trunk lid opener switch is pushed: ON
	Trunk lid opener switch is released: OFF

Without CONSULT-III

1. Insure front door lock knob RH is turned to the UNLOCK position.
2. Check voltage between BCM connector M18 terminal 30 and ground.

Terminals			Door condition		Voltage (V) (Approx.)
(+)		(–)			
BCM connector	Terminal				
M18	30	Ground	Trunk lid opener switch	Pushed	0
				Released	Battery voltage

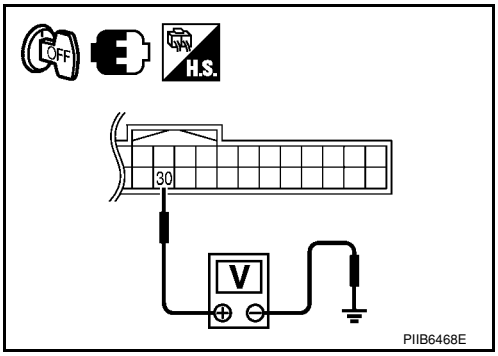

OK or NG

OK >> Trunk lid opener switch is OK.
NG >> GO TO 2.

2. CHECK TRUNK LID OPENER SWITCH CIRCUIT 1

1. Turn ignition switch OFF.
2. Disconnect BCM and trunk lid opener switch connector.
3. Check continuity between BCM connector (A) M18 terminal 30 and trunk lid opener switch connector (B) terminal 1.

A		B		Continuity
BCM connector	Terminal	Trunk lid opener switch connector	Terminal	
M18	30	B128	1	Yes

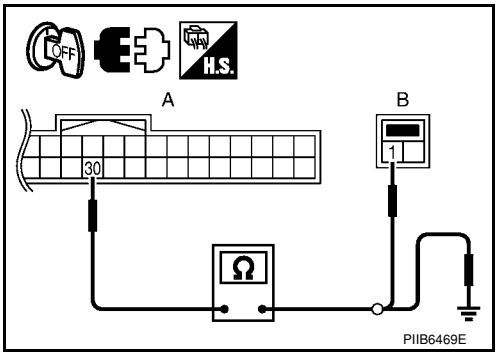

4. Check continuity between BCM connector (A) M18 terminal 30 and ground.

A		Ground	Continuity
BCM connector	Terminal		
M18	30		No

OK or NG

OK >> GO TO 3.
NG >> Repair or replace harness.

3. CHECK TRUNK LID OPENER SWITCH

Check continuity between trunk lid opener switch terminals 1 and 2.

Terminal		Trunk lid opener switch condition	Continuity
Trunk lid opener switch			
1	2	Pushed	Yes
		Released	No

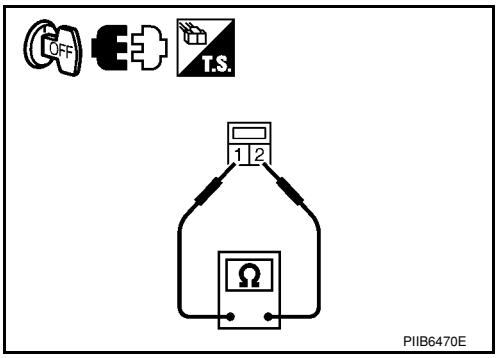

OK or NG

OK >> GO TO 4.
NG >> Replace trunk lid opener switch.

4. CHECK TRUNK LID OPENER SWITCH CIRCUIT 2

1. Disconnect front door lock actuator RH (door unlock sensor) connector.
2. Check continuity between trunk lid opener switch connector (A) B128 terminal 2 and front door lock actuator RH (door unlock sensor) connector (B) D114 terminal 4.

A		B		Continuity
Trunk lid opener switch connector	Terminal	Front door lock actuator RH (door unlock sensor) connector	Terminal	
B128	2	D114	4	Yes

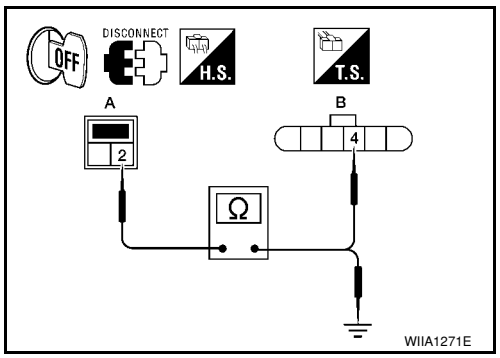

3. Check continuity between trunk lid opener switch connector (A) B128 terminal 2 and ground.

Trunk lid opener switch connector	Terminal	Ground	Continuity
B128	2		No

OK or NG

OK >> GO TO 5.
NG >> Repair or replace harness between trunk lid opener switch and front door lock actuator RH (door unlock sensor).

5. CHECK FRONT DOOR LOCK ACTUATOR RH (DOOR UNLOCK SENSOR) GROUND CIRCUIT

Check continuity between front door lock actuator RH (door unlock sensor) connector terminal 5 and ground.

Front door lock actuator RH (door unlock sensor) connector	Terminal	Ground	Continuity
D114	5		Yes

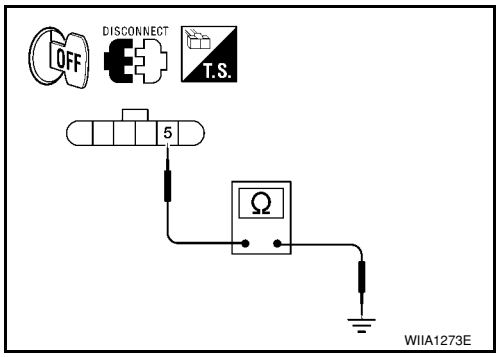

OK or NG

OK >> GO TO 6.
NG >> Repair or replace harness.

6. CHECK UNLOCK SENSOR FUNCTION

1. Connect front door lock actuator RH (door unlock sensor) connector.
2. Check continuity between trunk lid opener switch connector B128 terminal 2 and ground.

Trunk lid opener switch connector	Terminal		Front door lock knob RH position	Continuity
B128	2	Ground	Unlock	Yes
			Lock	No

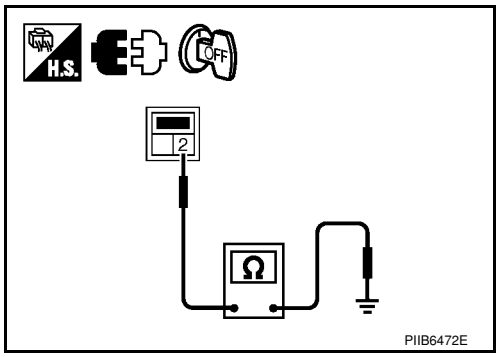

OK or NG

OK >> GO TO 7.
NG >> Replace front door lock actuator RH (door unlock sensor). Refer to BL-150.

7. CHECK TRUNK LID OPENER SWITCH SIGNAL 2

1. Connect BCM connector.
2. Check voltage between BCM connector and ground.

Terminals			Voltage (V) (Approx.)
(+)		(–)	
BCM connector	Terminal		
M18	30	Ground	Battery voltage

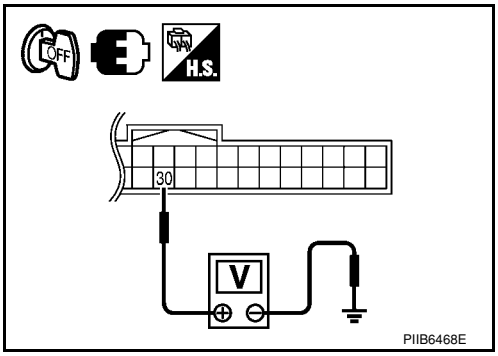

OK or NG

OK >> Check the condition of harness and connector.
NG >> Replace BCM. Refer to BCS-18, "Removal and Installation of BCM".

Check Trunk Lid Opener Switch Circuit (With Intelligent Key)

INFOID:0000000001704080

1. CHECK TRUNK LID OPENER SWITCH SIGNAL

With CONSULT-III

Check trunk lid opener switch ("I-KEY TRNK") in "DATA MONITOR" mode with CONSULT-III.

Test item	Condition
I-KEY TRNK	Trunk lid opener switch is pushed: ON (momentarily)
	Trunk lid opener switch is released: OFF

Without CONSULT-III

Check voltage between Intelligent Key unit connector M52 terminal 24 and ground.

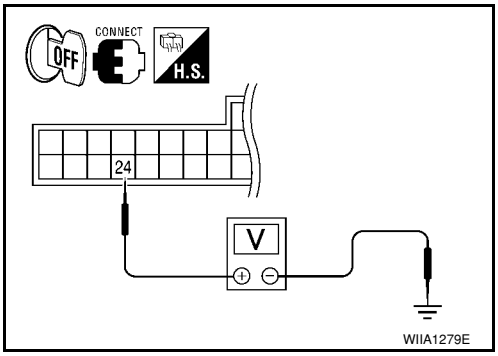

Terminals			Door condition		Voltage (V) (Approx.)
(+)		(–)			
Intelligent Key unit connector	Terminal				
M52	24	Ground	Trunk lid opener switch	Pushed	0
				Released	5

OK or NG

OK >> Trunk lid opener switch is OK.
NG >> GO TO 2.

2. CHECK TRUNK LID OPENER SWITCH CIRCUIT 1

1. Turn ignition switch OFF.
2. Disconnect Intelligent Key unit and trunk lid opener switch connector.
3. Check continuity between Intelligent Key unit connector (A) M52 terminal 24 and trunk lid opener switch connector B128 (B) terminal 1.

A		B		Continuity
Intelligent Key unit connector	Terminal	Trunk lid opener switch connector	Terminal	
M52	24	B128	1	Yes

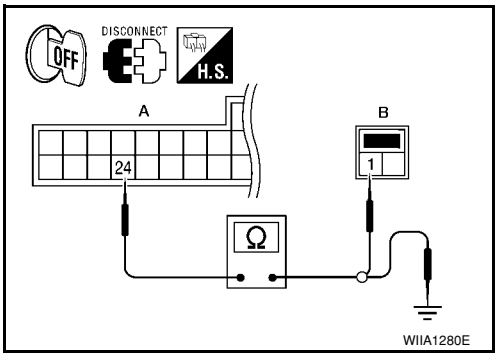

4. Check continuity between Intelligent Key unit connector (A) M52 terminal 24 and ground.

A		Ground	Continuity
Intelligent Key unit connector	Terminal		
M52	24		No

OK or NG

OK >> GO TO 3.
NG >> Repair or replace harness.

3. CHECK TRUNK LID OPENER SWITCH

Check continuity between trunk lid opener switch terminals 1 and 2.

Terminal		Trunk lid opener switch condition	Continuity
Trunk lid opener switch			
1	2	Pushed	Yes
		Released	No

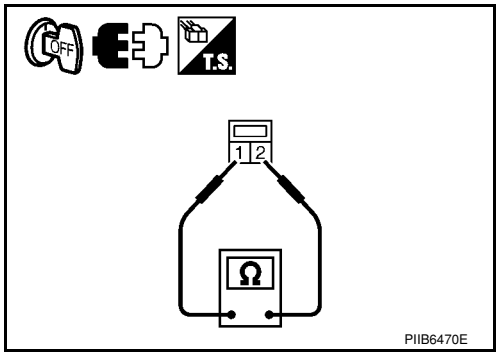

OK or NG

OK >> GO TO 4.
NG >> Replace trunk lid opener switch.

4. CHECK TRUNK LID OPENER SWITCH GROUND CIRCUIT

Check continuity between trunk lid opener switch connector terminal 2 and ground.

Trunk lid opener switch connector	Terminal	Ground	Continuity
B128	2		Yes

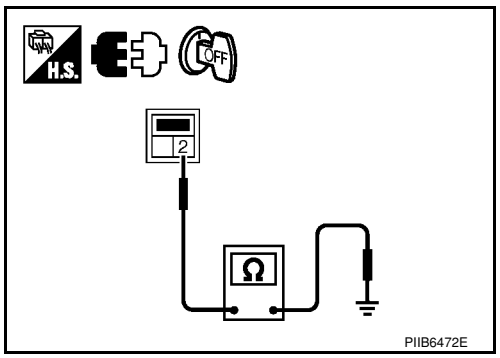

OK or NG

OK >> GO TO 6.
NG >> Repair or replace harness.

5. CHECK INTELLIGENT KEY UNIT OUTPUT SIGNAL

1. Connect Intelligent Key unit connector.
2. Check voltage between Intelligent Key unit connector M52 terminal 24 and ground.

Terminals			Voltage (V) (Approx.)
(+)		(–)	
Intelligent Key unit connector	Terminal		
M52	24	Ground	5

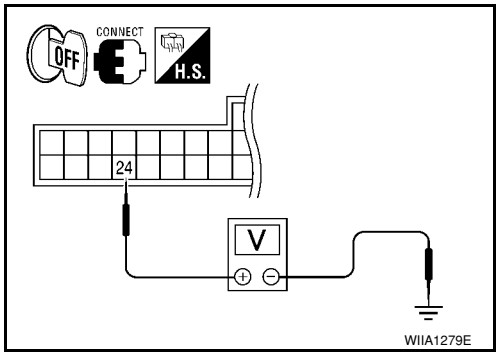

OK or NG

OK >> Check the condition of harness and connector.
NG >> Replace Intelligent Key unit. Refer to BL-142, "Removal and Installation of Intelligent Key Unit".

Check Trunk Release Solenoid Circuit

INFOID:0000000001704081

1. CHECK TRUNK LAMP SWITCH AND TRUNK RELEASE SOLENOID FUNCTION

With CONSULT-III

Check the operation with (“TRUNK/BACK DOOR”) in the ACTIVE TEST.

Does trunk release solenoid system operate normally?

YES or NO

YES >> Trunk release solenoid is OK.
NO >> GO TO 2.

2. CHECK TRUNK LAMP SWITCH AND RELEASE SOLENOID POWER SUPPLY

1. Turn ignition switch OFF.
2. Insure both front door lock knobs are turned to the UNLOCK position.
3. Disconnect trunk lamp switch and trunk release solenoid connector.
4. Check voltage between trunk lamp switch and trunk release solenoid connector B127 terminal 2 and ground.

Terminals			Condition		Voltage (V) (Approx.)
(+)		(–)			
Trunk lamp switch and trunk release solenoid connector	Terminal				
B127	2	Ground	Trunk lid opener switch	Pushed	0 ↓ Battery voltage ↓ 0
				Released	0

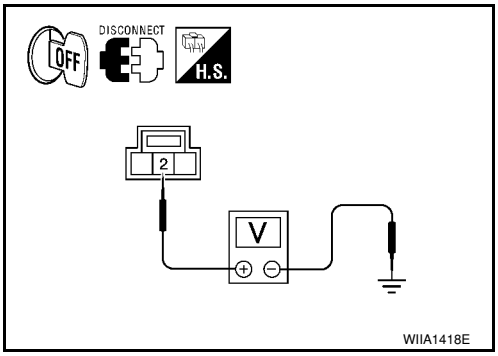

OK or NG

OK >> GO TO 3.
NG >> GO TO 4.

3. CHECK TRUNK LAMP SWITCH AND TRUNK RELEASE SOLENOID GROUND CIRCUIT

Check continuity between trunk lamp switch and trunk release solenoid connector B127 terminal 1 and ground.

Trunk lamp switch and trunk release solenoid connector	Terminal	Ground	Continuity
B127	1		Yes

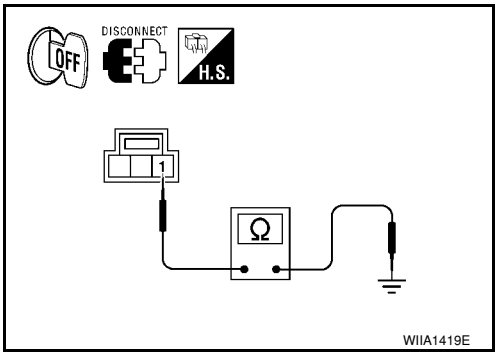

OK or NG

OK >> Replace trunk lamp switch and trunk release solenoid.
NG >> Repair or replace harness.

4. CHECK TRUNK LAMP SWITCH AND TRUNK RELEASE SOLENOID CIRCUIT

1. Disconnect BCM connector.
2. Check continuity between BCM connector (A) M19 terminal 53 and trunk lamp switch and trunk release solenoid connector B127(B) terminal 2.

A		B		Continuity
BCM connector	Terminal	Trunk lamp switch and trunk release solenoid connector	Terminal	
M19	53	B127	2	Yes

3. Check continuity between BCM connector (A) M19 terminal 53 and ground.

BCM connector	Terminal	Ground	Continuity
M19	53		No

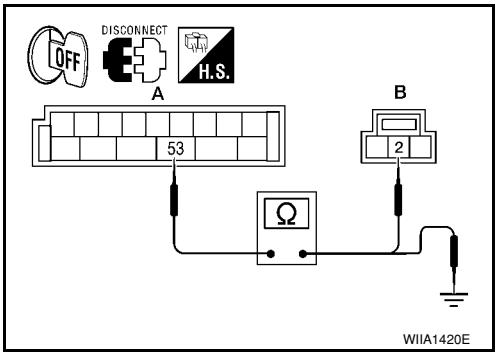

OK or NG

OK >> GO TO 5.
NG >> Repair or replace harness between BCM and trunk lamp switch and trunk release solenoid.

5. CHECK BCM OUTPUT SIGNAL

1. Connect BCM connector.
2. Check voltage between BCM connector M19 terminal 53 and ground.

Terminals			Condition		Voltage (V) (Approx.)
(+)		(–)			
BCM connector	Terminal				
M19	53	Ground	Trunk lid opener switch	Pushed	0 ↓ Battery voltage ↓ 0
				Released	0

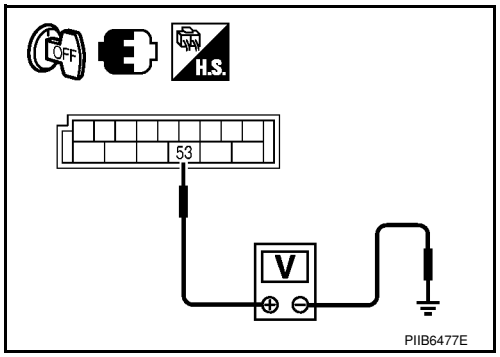

OK or NG

OK >> Check the condition of harness and connector.
NG >> Replace BCM. Refer to BCS-18, "Removal and Installation of BCM".

FUEL FILLER LID OPENER

Removal and Installation of Fuel Filler Lid Opener

INFOID:0000000001704082

REMOVAL

1. Remove trunk side finisher (RH). Refer to EI-51, "Removal and Installation".
2. Remove fuel filler lock.
3. Remove front kicking plate and rear kicking plate. Refer to EI-38, "Removal and Installation".
4. Remove rear cushion assembly. Refer to SE-15, "Removal and Installation".

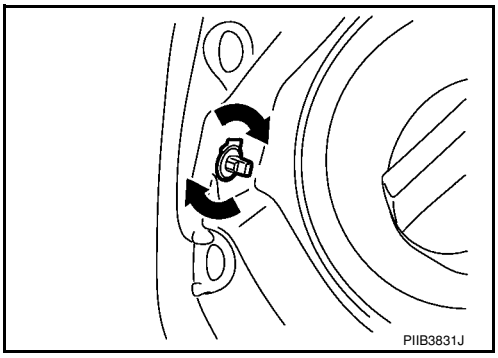

5. Remove fuel filler lid opener cable clip from the vehicle.

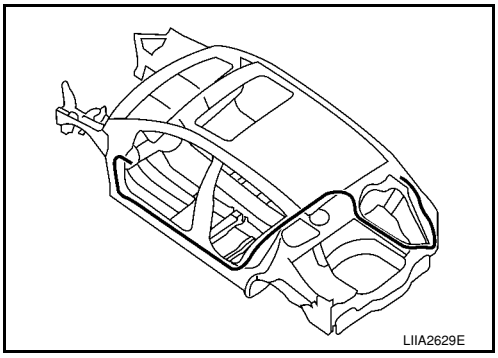

6. Remove the bolts and the fuel filler lid opener.
7. Remove the fuel filler lid opener cable.

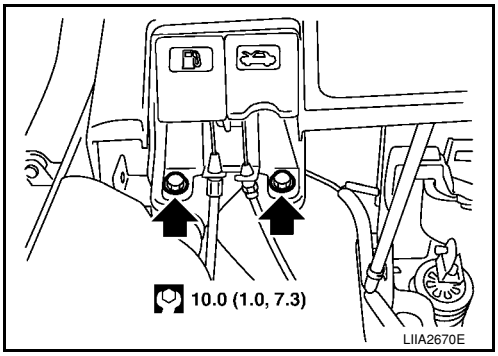

INSTALLATION

Installation is in the reverse order of removal.

VEHICLE SECURITY (THEFT WARNING) SYSTEM

Component Parts and Harness Connector Location

INFOID:0000000001704083

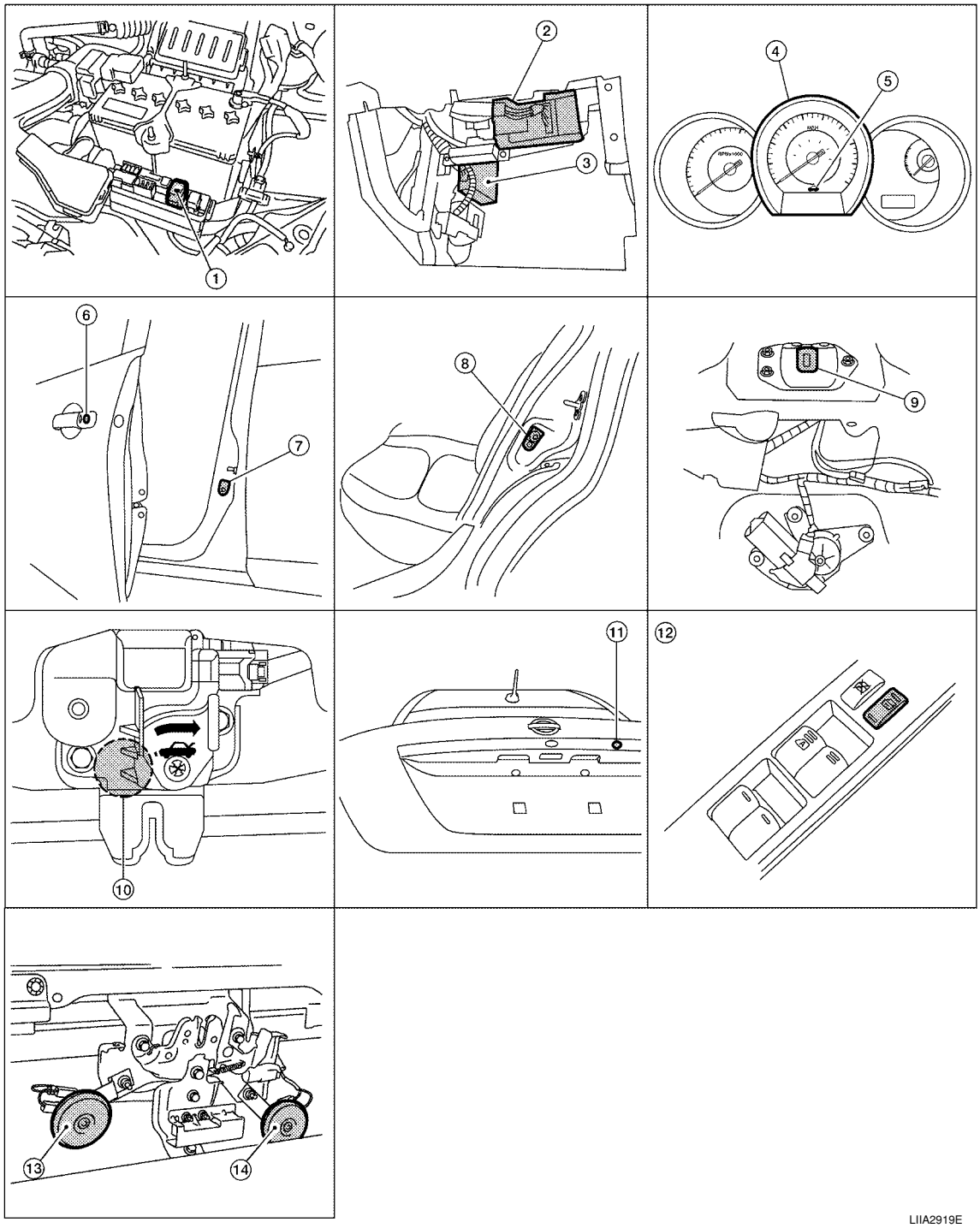

LIIA2919E

1. Horn relay H-1
2. BCM M18, M19, M20 (view with glove box removed)
3. Intelligent Key unit M52 (with Intelligent Key)
4. Combination meter M24
5. Security indicator lamp
6. Front door key cylinder switch LH D14
7. Front door switch LH B8, RH B108
8. Rear door switch LH B6, RH B116
9. Back door lock assembly (back door switch) D405 (hatchback view with back door open)

10. Trunk lamp switch and trunk release solenoid B127 (sedan view with trunk open)
11. Trunk key cylinder switch B142
12. Main power window and door lock/unlock switch D7, D8 Power window and door lock/unlock switch RH D105
13. Horn (low) E18, E20
14. Horn (high) E21, E22

System Description

INFOID:0000000001704084

DESCRIPTION

Operation Flow

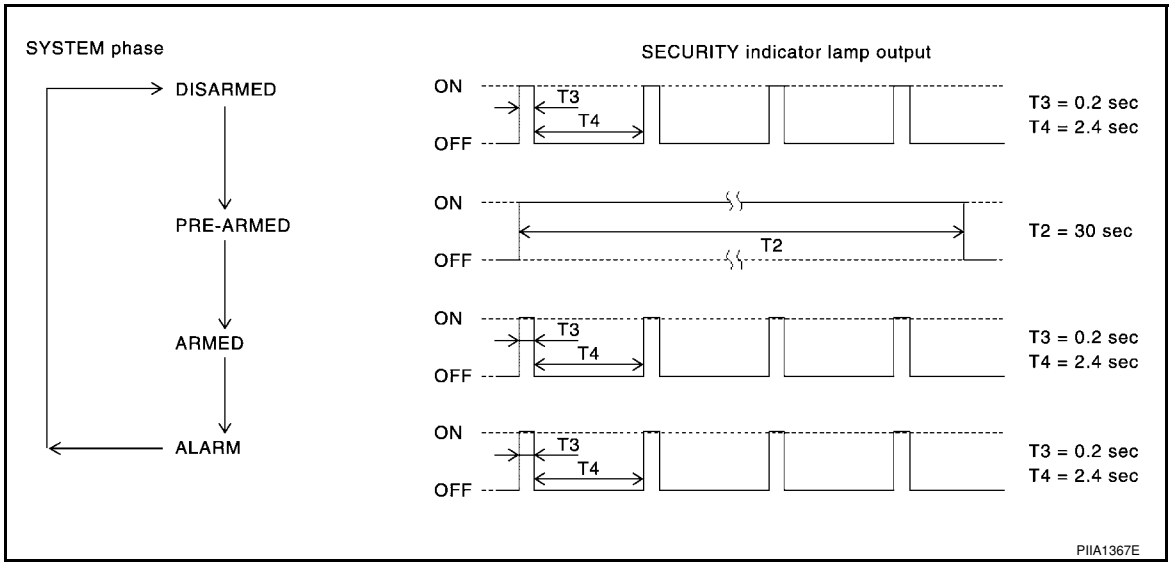

Setting the vehicle security system

Initial condition
- Ignition switch is in OFF position.

Disarmed phase
- When the vehicle is being driven or when any door or trunk (sedan) is open, the vehicle security system is set in the disarmed phase on the assumption that the owner is inside or near the vehicle.

Pre-armed phase and armed phase
- The vehicle security system turns into the "pre-armed" phase (security lamp illuminates) when the BCM receives LOCK signal from front door key cylinder switch, keyfob or Intelligent Key after all doors and trunk (sedan) are closed.
- All doors and trunk (sedan) are closed after front doors are locked by key or door lock and unlock switch. The security indicator lamp illuminates for 30 seconds. then, the system automatically shifts into the "armed" phase.

Canceling the set vehicle security system

Armed phase is canceled when the driver unlocks the doors or the trunk (sedan) with the key, keyfob or Intelligent Key.

Activating the alarm operation of the vehicle security system

Make sure the system is in the armed phase.

When one of the following operations is performed, the system sounds the horns and flashes the headlamps for about 50 seconds.

1. Any door is opened before unlocking door with key, keyfob or Intelligent Key.
2. Door is unlocked without using key, keyfob or Intelligent Key.
3. Trunk (sedan) is opened without using the key, trunk lid opener switch, keyfob or Intelligent Key (sedan).

POWER SUPPLY AND GROUND

Power is supplied at all times
- through 10A fuse [No.13, located in the fuse block (J/B)]

- to combination meter terminal 27 (security indicator lamp)
- through 40A fusible link (letter **g**, located in the fuse and fusible link box)
- to BCM terminal 70
- through 10A fuse [No. 8, located in the fuse block (J/B)]
- to BCM terminal 57
- through 10A fuse (No. 28, located in the fuse and fusible link box)
- to horn relay terminal 2
- through 15A fuse (No. 52, located in the IPDM E/R)
- to IPDM E/R internal CPU.
- through 20A fuse (No. 53, located in the IPDM E/R)
- to IPDM E/R internal CPU.

With the ignition switch in the ACC or ON position, power is supplied
- through 10A fuse [No. 20, located in the fuse block (J/B)]
- to BCM terminal 11.

With the ignition switch in the ON or START position, power is supplied
- through 10A fuse [No. 6, located in the fuse block (J/B)]
- to BCM terminal 38.

Ground is supplied
- to BCM terminal 67
- through body grounds M57 and M61.

INITIAL CONDITION TO ACTIVATE THE SYSTEM

The operation of the vehicle security system is controlled by the doors and trunk (sedan).
To activate the vehicle security system, BCM must receive signals indicating the ignition switch is OFF, doors and trunk (sedan) are closed and locked.
When a door or trunk (sedan) is open, BCM terminal 12, 13, 42, 43, 47 or 48 receives a ground signal from each door or trunk switch. In addition to BCM, when back door is open, the Intelligent Key unit terminal 23 receives a ground signal from back door or trunk (sedan) through BCM terminal 30.
When front door LH is unlocked, BCM terminal 46 receives a signal from terminal 6 of main power window and door lock/unlock switch.
When front door RH is unlocked, BCM terminal 46 receives a signal from terminal 2 of power window and door lock/unlock switch RH.

VEHICLE SECURITY SYSTEM ALARM OPERATION

The vehicle security system is triggered by
- Opening a door without using the key, keyfob or Intelligent Key.
- Opening trunk without using the key, keyfob or Intelligent Key (sedan).

The vehicle security system will be triggered once the system is in armed phase,
- when BCM receives a ground signal at terminals 12, 13, 47, 48 (front or rear door switch), terminal 42 (sedan, trunk switch) or terminal 43 (hatchback, back door switch).

When the vehicle security system is triggered, ground is supplied intermittently
- from IPDM E/R terminal 45
- to horn relay terminal 1.

The headlamps flash and the horn sounds intermittently.
The alarm automatically turns off after 50 seconds, but will reactivate if the vehicle is tampered with again.

VEHICLE SECURITY SYSTEM DEACTIVATION

To deactivate the vehicle security system, a door or trunk (sedan) must be unlocked with the key, keyfob or Intelligent Key.
When the key is used to unlock the driver door, BCM terminal 7 receives signal
- from terminal 3 of the front door key cylinder switch LH.

When the key is used to open the trunk (sedan), BCM terminal 41 receives signal
- from terminal 1 of the trunk key cylinder switch.

When the BCM receives an unlock signal from keyfob, Intelligent Key, front door key cylinder switch LH or trunk key cylinder switch (sedan), the vehicle security system is deactivated (Disarmed phase).

PANIC ALARM OPERATION

Intelligent Key and remote keyless entry system may or may not operate vehicle security system (horn and headlamps) as required.
When the remote keyless entry system is triggered, ground is supplied intermittently

- from IPDM E/R terminal 45
- to horn relay terminal 1.

The headlamp flashes and the horn sounds intermittently.
The alarm automatically turns off after 25 seconds or when BCM receives any signal from keyfob or Intelligent Key.

CAN Communication System Description

INFOID:0000000001704085

Refer to LAN-6.

Schematic

INFOID:0000000001704086

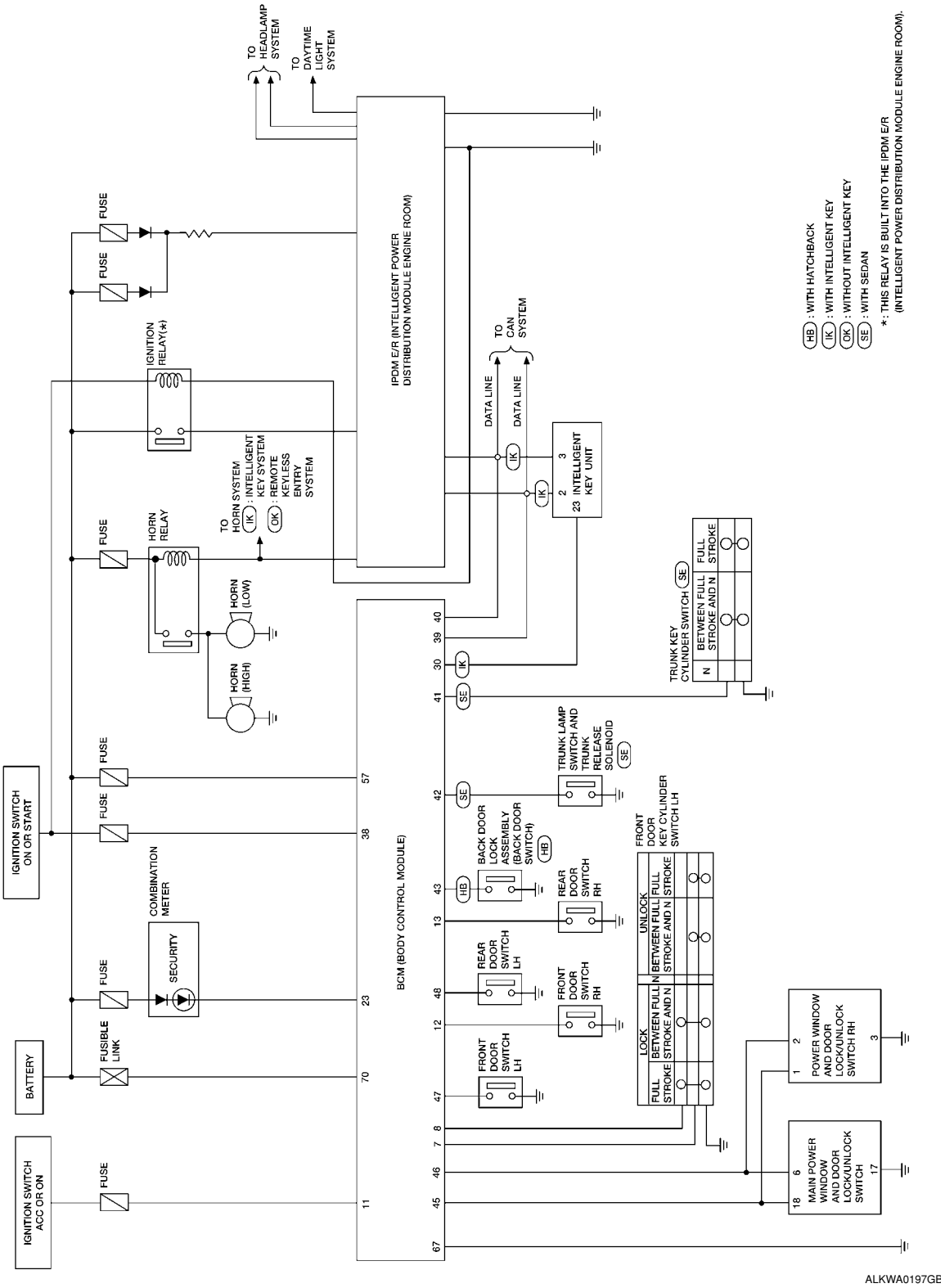

Wiring Diagram - VEHSEC -

INFOID:0000000001704087

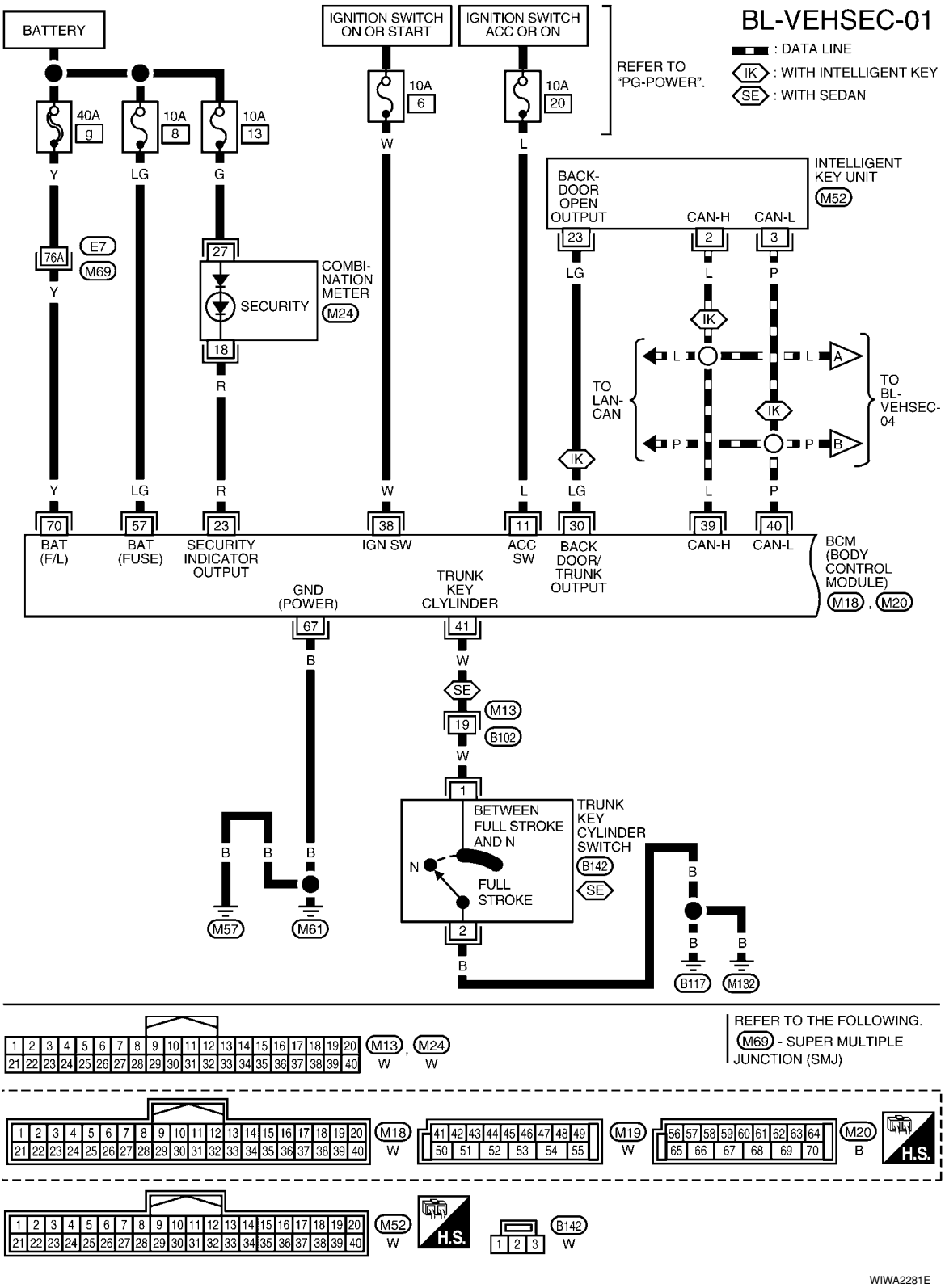

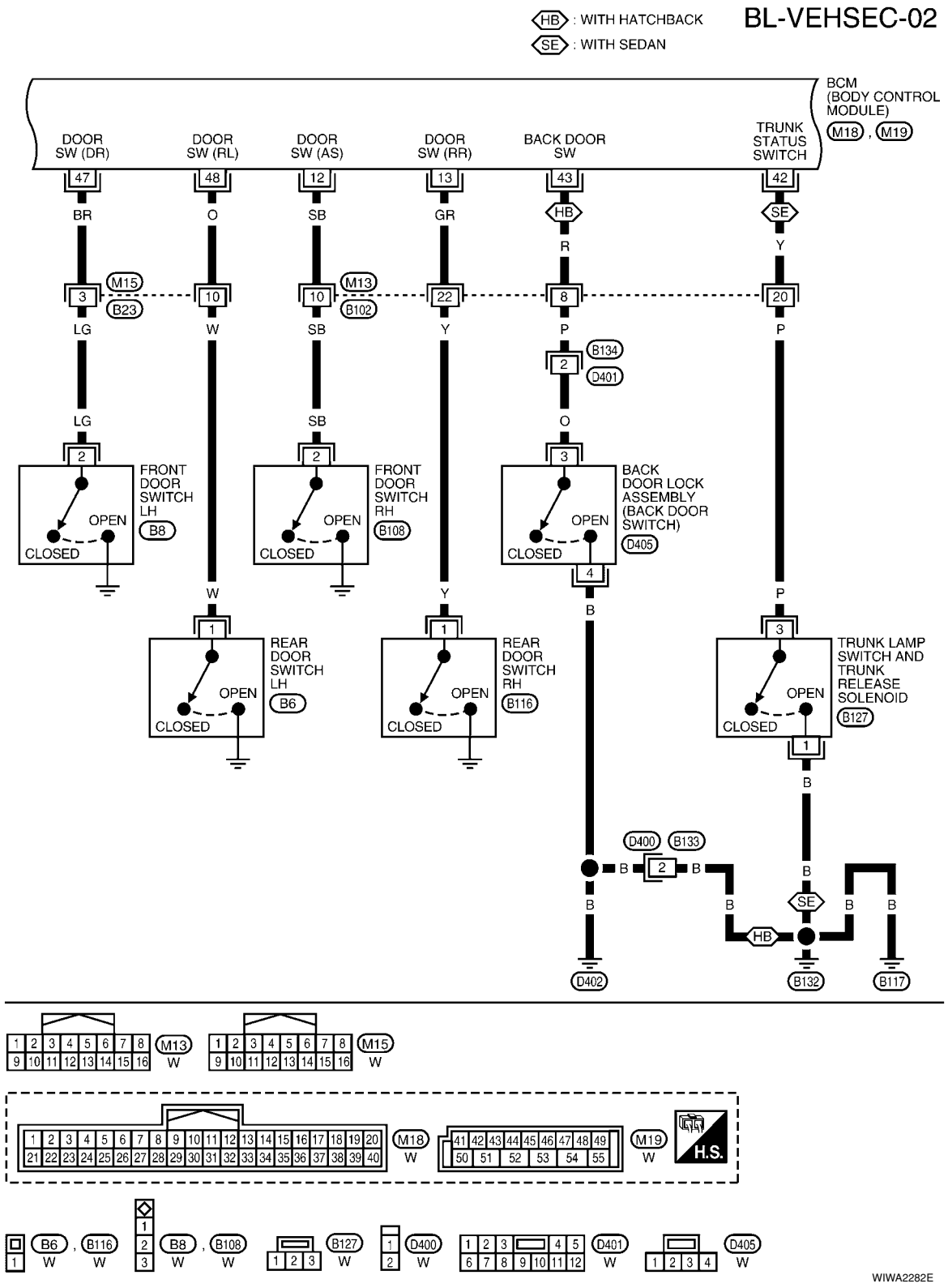
BL-VEHSEC-02
HB : WITH HATCHBACK
SE : WITH SEDAN
BCM (BODY CONTROL MODULE)
M18 , M19
DOOR SW (DR)
DOOR SW (RL)
DOOR SW (AS)
DOOR SW (RR)
BACK DOOR SW
TRUNK STATUS SWITCH
47
48
12
13
43
42
BR
O
SB
GR
R
Y
M15
B23
M13
B102
3
10
10
22
8
20
LG
W
SB
Y
P
P
B134
D401
2
LG
SB
O
FRONT DOOR SWITCH LH
B8
FRONT DOOR SWITCH RH
B108
BACK DOOR LOCK ASSEMBLY (BACK DOOR SWITCH)
D405
OPEN
CLOSED
4
W
Y
B
P
REAR DOOR SWITCH LH
B6
REAR DOOR SWITCH RH
B116
TRUNK LAMP SWITCH AND TRUNK RELEASE SOLENOID
B127
D400
B133
D402
B132
B117
M13
M15
M18
M19
H.S.
B6 , B116
B8 , B108
B127
D400
D401
D405
WIWA2282E

BL-VEHSEC-03

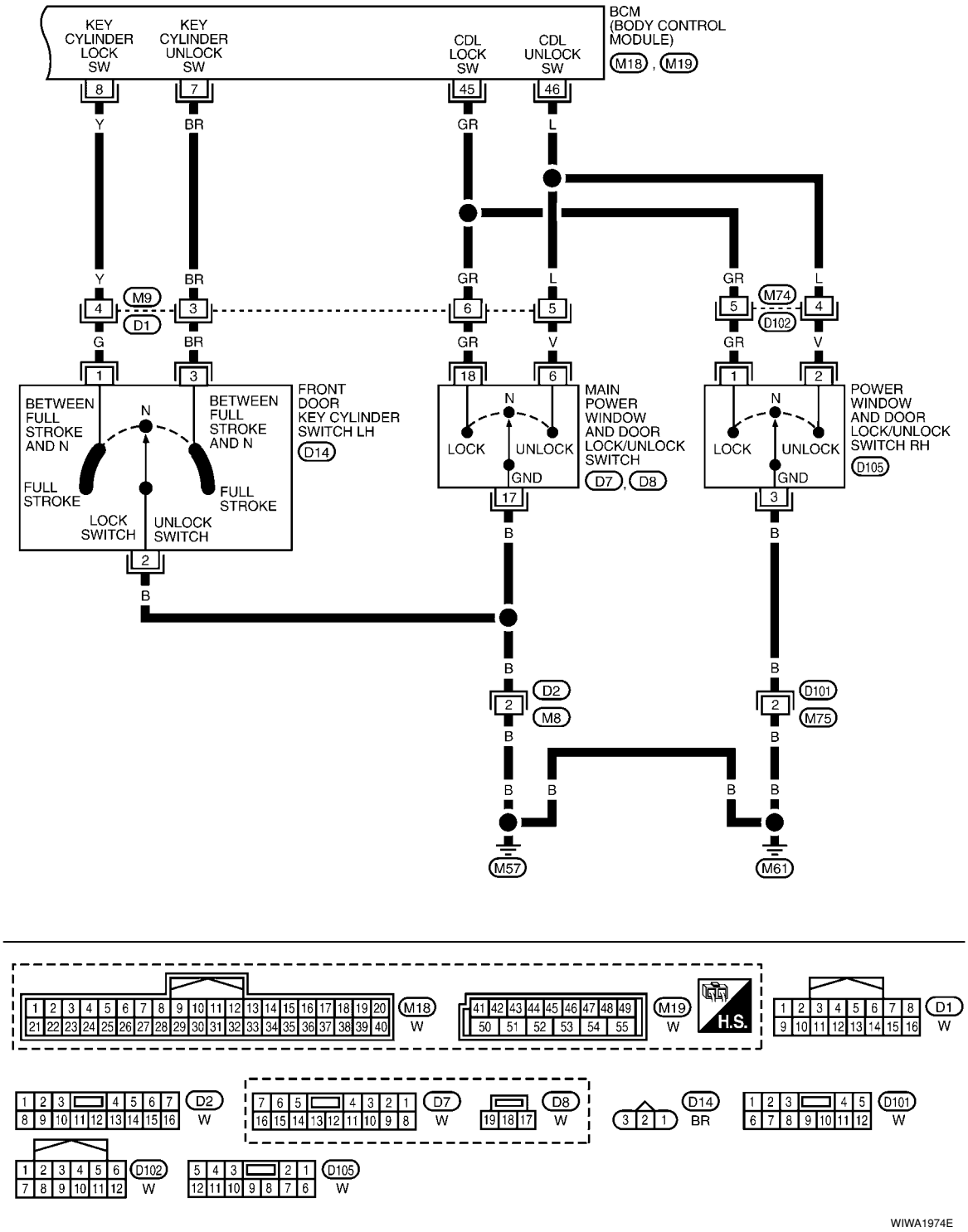
BCM
(BODY CONTROL
MODULE)
M18 , M19
KEY
CYLINDER
LOCK
SW
KEY
CYLINDER
UNLOCK
SW
CDL
LOCK
SW
CDL
UNLOCK
SW
8
7
45
46
Y
BR
GR
L
M9
D1
M74
D102
G
BR
GR
V
GR
V
1
3
18
6
1
2
BETWEEN
FULL
STROKE
AND N
N
BETWEEN
FULL
STROKE
AND N
FULL
STROKE
FULL
STROKE
LOCK
SWITCH
UNLOCK
SWITCH
FRONT
DOOR
KEY CYLINDER
SWITCH LH
D14
LOCK
UNLOCK
GND
MAIN
POWER
WINDOW
AND DOOR
LOCK/UNLOCK
SWITCH
D7 , D8
POWER
WINDOW
AND DOOR
LOCK/UNLOCK
SWITCH RH
D105
17
3
B
2
D2
M8
D101
M75
M57
M61
M18
W
M19
W
H.S.
D1
W
D2
W
D7
W
D8
W
D14
BR
D101
W
D102
W
D105
W
WIWA1974E

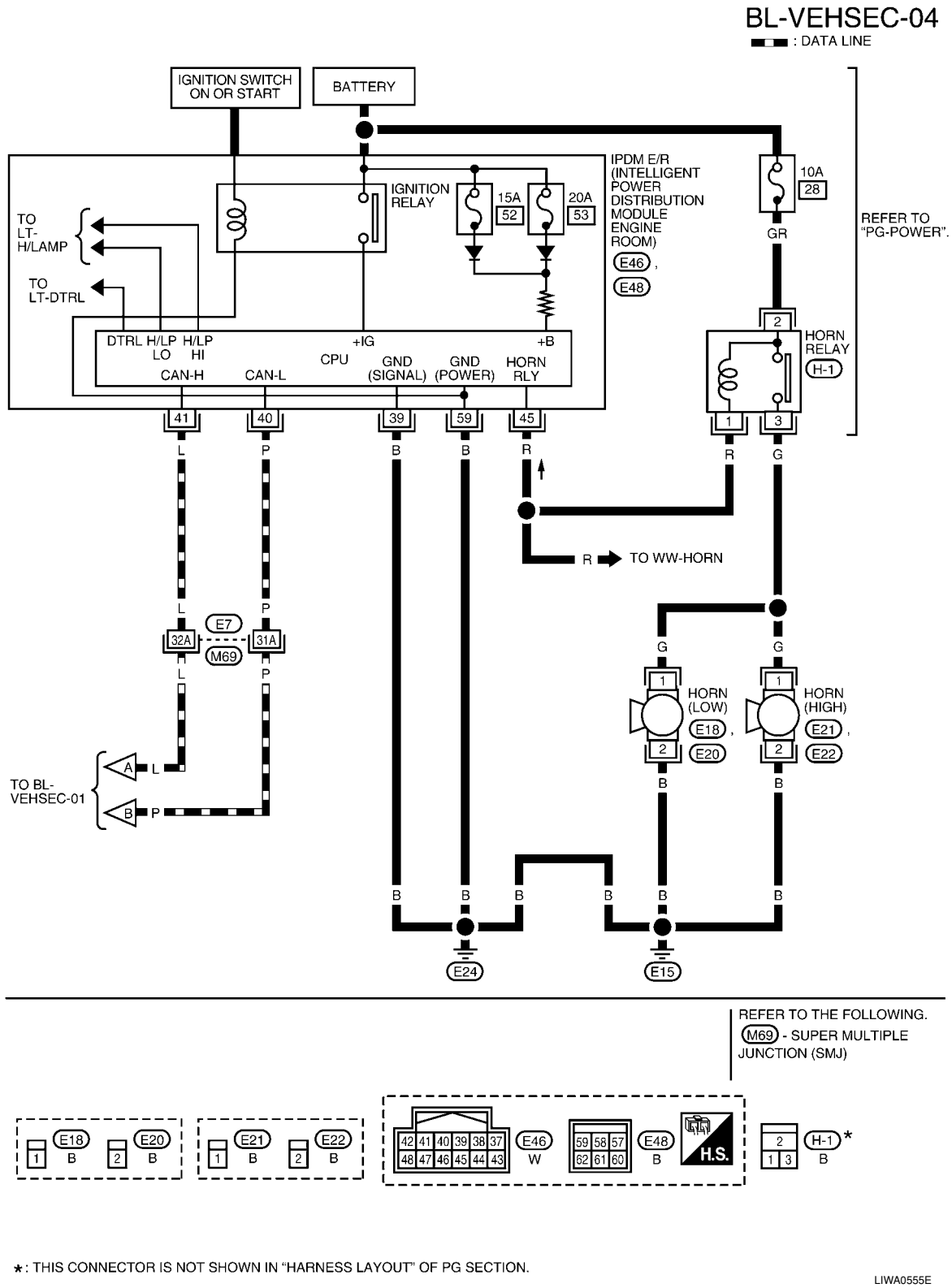

Terminal and Reference Value for BCM

INFOID:0000000001704088

Refer to BCS-11, "Terminal and Reference Value for BCM".

Terminal and Reference Value for Intelligent Key Unit

INFOID:0000000001704089

Refer to BL-96, "Terminal and Reference Value for Intelligent Key Unit".

CONSULT-III Function (BCM)

INFOID:0000000001704090

CONSULT-III can display each diagnostic item using the diagnostic test modes shown following.

BCM diagnostic test item	Diagnostic mode	Description
Inspection by part	WORK SUPPORT	Supports inspections and adjustments. Commands are transmitted to the BCM for setting the status suitable for required operation, input/output signals are received from the BCM and received date is displayed.
	DATA MONITOR	Displays BCM input/output data in real time.
	ACTIVE TEST	Operation of electrical loads can be checked by sending drive signal to them.
	SELF-DIAG RESULTS	Displays BCM self-diagnosis results.
	CAN DIAG SUPPORT MNTR	The result of transmit/receive diagnosis of CAN communication can be read.
	ECU PART NUMBER	BCM part number can be read.
	CONFIGURATION	Performs BCM configuration read/write functions.

CONSULT-III APPLICATION ITEM

Work Support

Test Item	Description
SECURITY ALARM SET	This mode can confirm and change security alarm ON-OFF setting.
THEFT ALM TRG	The switch which triggered vehicle security alarm is recorded. This mode is able to confirm and erase the record of vehicle security alarm. The trigger data can be erased by touching “CLEAR” on CONSULT-III screen.

Data Monitor

Monitored Item	Description
IGN ON SW	Indicates [ON/OFF] condition of ignition switch.
ACC ON SW	Indicates [ON/OFF] condition of ignition switch in ACC position.
KEYLESS LOCK*	Indicates [ON/OFF] condition of lock signal from keyfob.
KEYLESS UNLOCK*	Indicates [ON/OFF] condition of unlock signal from keyfob.
I-KEY LOCK**	Indicates [ON/OFF] condition of lock signal from keyfob.
I-KEY UNLOCK**	Indicates [ON/OFF] condition of unlock signal from keyfob.
I-KEY TRUNK**	Indicates [ON/OFF] condition of trunk open signal from keyfob.
TRNK OPNR SW	Indicates [ON/OFF] condition of trunk opener switch.
TRUNK CYL SW	Indicates [ON/OFF] condition of trunk key cylinder switch.
TRNK OPN MNTR	Indicates [ON/OFF] condition of trunk lid status.
DOOR SW-DR	Indicates [ON/OFF] condition of front door switch LH.
DOOR SW-AS	Indicates [ON/OFF] condition of front door switch RH.
DOOR SW-RR	Indicates [ON/OFF] condition of rear door switch RH.
DOOR SW-RL	Indicates [ON/OFF] condition of rear door switch LH.
BACK DOOR SW	Indicates [ON/OFF] condition of back door switch.
KEY CYL LK SW	Indicates [ON/OFF] condition of lock signal from key cylinder switch.
KEY CYL UN SW	Indicates [ON/OFF] condition of unlock signal from key cylinder switch.
CDL LOCK SW	Indicates [ON/OFF] condition of lock signal from door lock/unlock switch LH and RH.
CDL UNLOCK SW	Indicates [ON/OFF] condition of unlock signal from door lock/unlock switch LH and RH.

* : With remote keyless entry system

** : With Intelligent Key system

Active Test

Test Item	Description
THEFT IND	This test is able to check security indicator lamp operation. The lamp will be turned on when “ON” on CONSULT-III screen is touched.
VEHICLE SECURITY HORN	This test is able to check vehicle security horn operation. The horns will be activated for 0.5 seconds after “ON” on CONSULT-III screen is touched.
HEADLAMP (HI)	This test is able to check vehicle security lamp operation. The headlamps will be activated for 0.5 seconds after “ON” on CONSULT-III screen is touched.

Trouble Diagnosis

INFOID:0000000001704091

WORK FLOW

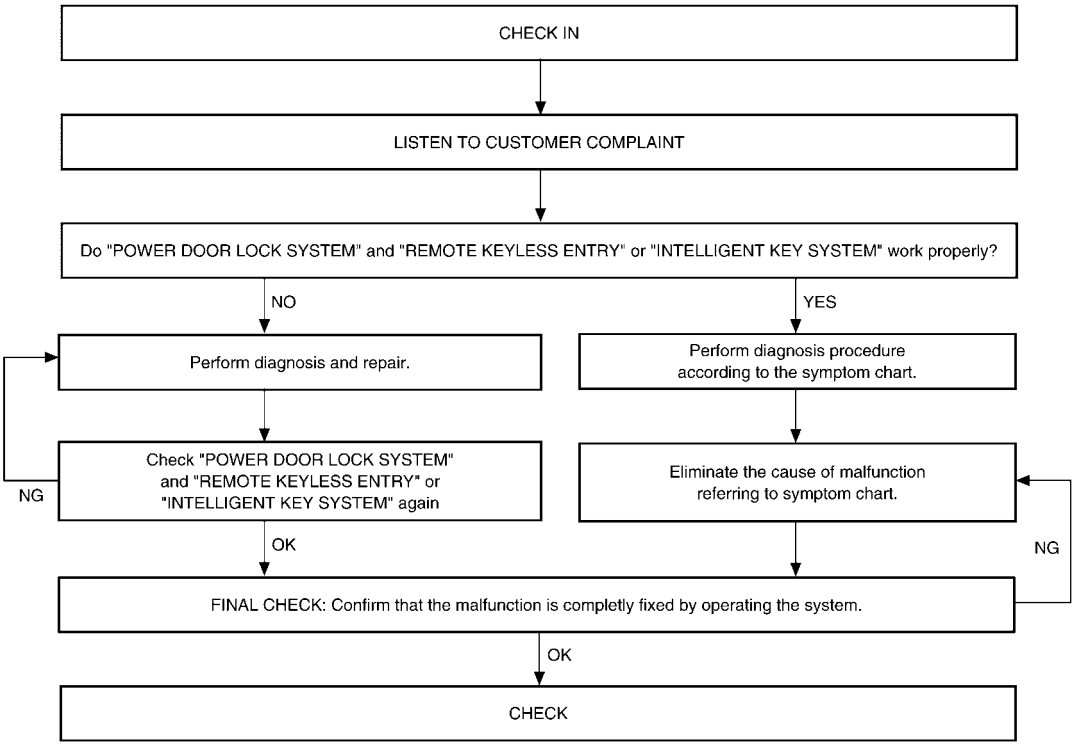

LIIA2635E

- For “POWER DOOR LOCK SYSTEM” diagnosis, refer to BL-22.
- For "INTELLIGENT KEY SYSTEM” diagnosis, refer to BL-74.
- For “REMOTE KEYLESS ENTRY SYSTEM” diagnosis, refer to BL-51.

Preliminary Check

INFOID:0000000001704092

1. CHECK BCM CONFIGURATION

Confirm BCM configuration for "THEFT ALARM" is set to "WITH". Refer to BCS-17, "Configuration".

OK or NG

OK >> Proceed with the preliminary check to verify system operation.
NG >> Change BCM configuration for "THEFT ALARM" to "WITH". Refer to BCS-17, "Configuration".

The system operation is canceled by turning ignition switch to ACC at any step between START and ARMED in the following flow chart.

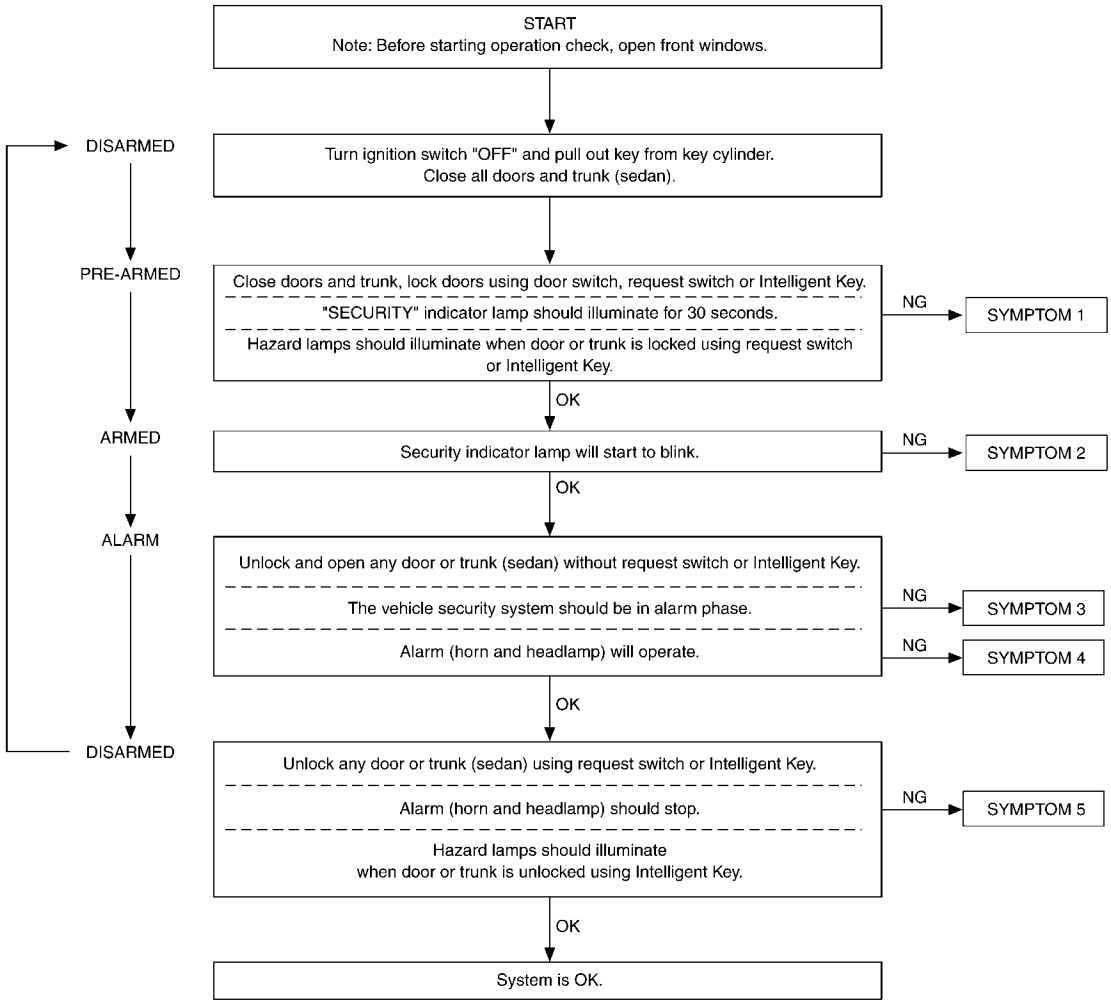

After performing preliminary check, go to symptom chart. Refer to BL-199, "Symptom Chart".

Symptom Chart

INFOID:0000000001704093

	SYMPTOM	PROCEDURE	Diagnostic procedure
1	Vehicle security system cannot be set by ····	All items	Diagnostic Procedure 1 (Door switch check) (Hatchback) Refer to BL-200, "Diagnosis Procedure 1".
			Diagnostic Procedure 7 (Door switch check) (Sedan) Refer to BL-204, "Diagnosis Procedure 7".
			Diagnostic Procedure 8 (Trunk switch check) (Sedan) Refer to BL-206, "Diagnosis Procedure 8".
			If the above systems are “OK”, replace BCM. Refer to BCS-18, "Removal and Installation of BCM".
		Lock/unlock switch	Diagnostic Procedure 6 (Door lock/unlock switch check) Refer to BL-204, "Diagnosis Procedure 6".
			If the above systems are “OK”, check main power window and door lock/unlock switch. Refer to GW-18.
		Door outside key (driver)	Diagnostic Procedure 3 (Door key cylinder switch check) Refer to BL-204, "Diagnosis Procedure 3".
			If the above systems are “OK”, check main power window and door lock/unlock switch. Refer to GW-18.
		Intelligent key	Check Intelligent Key entry function. Refer to BL-76, "System Description"
			If the above systems are “OK”, replace BCM. Refer to BCS-18, "Removal and Installation of BCM".
		Keyfob (without Intelligent Key)	Check remote keyless entry function. Refer to BL-58, "Preliminary Check".
			If the above systems are “OK”, replace BCM. Refer to BCS-18, "Removal and Installation of BCM".
2	Security indicator does not turn “ON”.	Security indicator lamp	Diagnostic Procedure 2 (Security indicator lamp check) Refer to BL-203, "Diagnosis Procedure 2".
			If the above systems are “OK”, replace BCM. Refer to BCS-18, "Removal and Installation of BCM".
3	*1 Vehicle security system does not alarm when ····	Any door or trunk is opened.	Diagnostic Procedure 1 (Door switch check) (hatchback) Refer to BL-200, "Diagnosis Procedure 1".
			Diagnostic Procedure 7 (Door switch check) (Sedan) Refer to BL-204, "Diagnosis Procedure 7".
			Diagnostic Procedure 8 (Trunk switch check) (Sedan) Refer to BL-206, "Diagnosis Procedure 8".
			If the above systems are “OK”, replace BCM. Refer to BCS-18, "Removal and Installation of BCM".
4	Vehicle security alarm does not activate.	Horn alarm	Diagnostic Procedure 4 (Vehicle security horn alarm check). Refer to BL-204, "Diagnosis Procedure 4".
			If the above systems are “OK”, check horn system. Refer to WW-37.
		Head lamp alarm	Diagnostic Procedure 5 (Head lamp alarm check). Refer to BL-204, "Diagnosis Procedure 5".
			If the above systems are “OK”, replace BCM. Refer to BCS-18, "Removal and Installation of BCM".

	SYMPTOM	PROCEDURE	Diagnostic procedure
5	Vehicle security system cannot be canceled by ····	Door outside key (driver)	Diagnostic Procedure 3 (Door key cylinder switch check). Refer to BL-204, "Diagnosis Procedure 3".
			If the above systems are “OK”, check main power window and door lock/unlock switch. Refer to GW-18.
		Trunk key cylinder switch (sedan)	Diagnostic Procedure 9 (Trunk key cylinder switch check) (Sedan) Refer to BL-207, "Diagnosis Procedure 9".
		Intelligent key	Check Intelligent Key entry function. Refer to BL-76, "System Description"
			If the above systems are “OK”, replace BCM. Refer to BCS-18, "Removal and Installation of BCM".
		Keyfob (without Intelligent Key)	Check remote keyless entry function. Refer to BL-58, "Preliminary Check".
			If the above systems are “OK”, replace BCM. Refer to BCS-18, "Removal and Installation of BCM".

*1 : Make sure the system is in the armed phase.

Diagnosis Procedure 1

INFOID:0000000001704094

1-1 DOOR SWITCH CHECK (HATCHBACK)

1.CHECK DOOR SWITCHES INPUT SIGNAL

With CONSULT-III

Check door switches ("DOOR SW-DR", "DOOR SW-AS", "DOOR SW-RL", "DOOR SW-RR", "BACK DOOR SW") in DATA MONITOR mode with CONSULT–III. Refer to BL-36, "CONSULT-III Function (BCM)".

- When doors are open:

DOOR SW-DR : ON
DOOR SW-AS : ON
DOOR SW-RL : ON
DOOR SW-RR : ON
BACK DOOR SW : ON

- When doors are closed:

DOOR SW-DR : OFF
DOOR SW-AS : OFF
DOOR SW-RL : OFF
DOOR SW-RR : OFF
BACK DOOR SW : OFF

Without CONSULT-III

Check voltage between BCM connector M18 or M19 terminals 12, 13, 43, 47, 48 and ground.

Connector	Item	Terminals		Condition	Voltage (V) (Approx.)
		(+)	(–)		

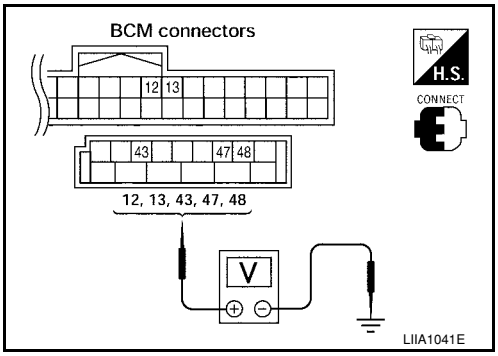

M18	Front door switch RH	12	Ground	Open ↓ Closed	0 ↓ Battery voltage
	Rear door switch RH	13			
M19	Back door switch	43			
	Front door switch LH	47			
	Rear door switch LH	48			

OK or NG

OK1 >> Door switch circuit is OK (without Intelligent Key).
OK2 >> GO TO 6 (with Intelligent Key).
NG >> GO TO 2.

2. CHECK DOOR SWITCH CIRCUIT

1. Turn ignition switch OFF.
2. Disconnect door switch and BCM.
3. Check continuity between door switch connector (B) B8 (front LH), B108 (front RH) terminal 2 or (C) B6 (rear LH), B116 (rear RH) terminal 1 or back door lock assembly connector (D) D405 terminal 3 and BCM connectors (A) M18, M19 terminals 12, 13, 43, 47 and 48.

1 - 13 : Continuity should exist.
1 - 48 : Continuity should exist.
2 - 12 : Continuity should exist.
2 - 47 : Continuity should exist.
3 - 43 : Continuity should exist.

4. Check continuity between door switch connector (B) B8 (front LH), B108 (front RH) terminal 2 or (C) B6 (rear LH), B116 (rear RH) terminal 1 or back door lock assembly connector (D) D405 terminal 3 and ground.

1 - Ground : Continuity should not exist.
2 - Ground : Continuity should not exist.
3 - Ground : Continuity should not exist.

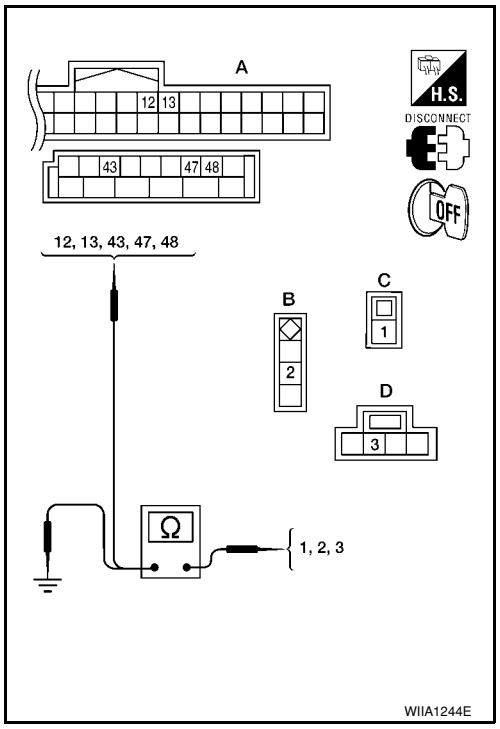

OK or NG

OK >> GO TO 3.
NG >> Repair or replace harness.

3. CHECK DOOR SWITCHES

FRONT AND REAR DOORS

Check continuity between front door switch terminal 2 or rear door switch terminal 1 and exposed metal of switch while pressing and releasing switch.

Door switch is released : Continuity should exist.
Door switch is pushed : Continuity should not exist.

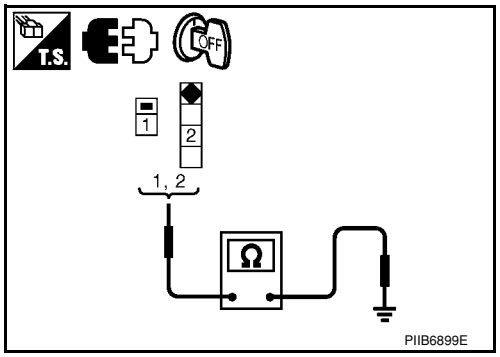

BACK DOOR

Check continuity between back door lock assembly connector (back door switch) terminals 3 and 4 while pressing (closing back door) and releasing (opening back door) switch.

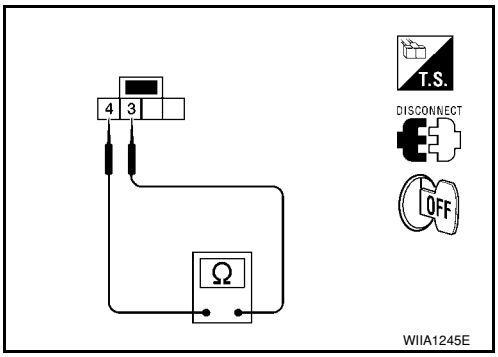

When back door is open : Continuity should exist.

When back door is closed : Continuity should not exist.

OK or NG

OK1 >> (Front and rear doors) Switch circuit is OK.
OK2 >> (Back door) GO TO 4.
NG >> Replace door switch.

4. CHECK BACK DOOR SWITCH GROUND

Check continuity between back door lock assembly connector D405 terminal 4 and ground.

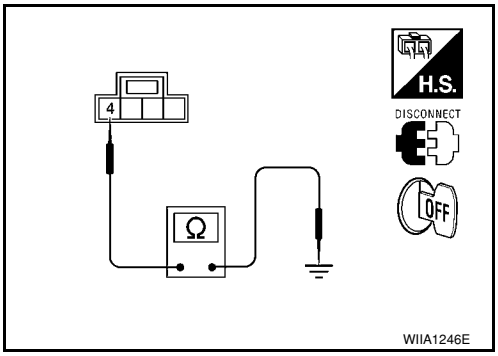

4 - Ground : Continuity should exist.

OK or NG

OK1 >> Back door switch circuit is OK (without Intelligent Key).
OK2 >> GO TO 5 (with Intelligent Key).
NG >> Repair or replace harness.

5. CHECK BACK DOOR SWITCH SIGNAL FOR SHORT

1. Disconnect Intelligent Key unit.
2. Check continuity between BCM connector M18 terminal 30 and ground.

30 - Ground : Continuity should not exist.

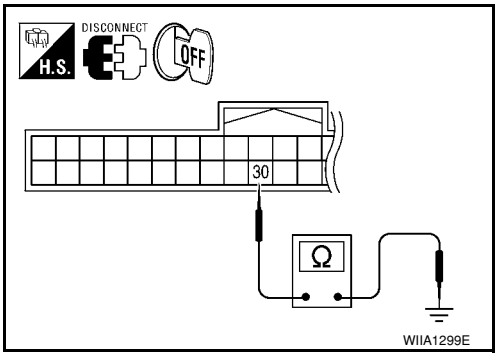

OK or NG

OK >> Back door switch circuit is OK.
NG >> Repair or replace harness.

6. CHECK BACK DOOR SWITCH SIGNAL FOR OPEN

1. Turn ignition switch OFF.
2. Disconnect Intelligent Key unit and BCM.
3. Check continuity between Intelligent Key unit connector M52 (A) terminal 23 and BCM connector M18 (B) terminal 30.

23 - 30 : Continuity should exist.

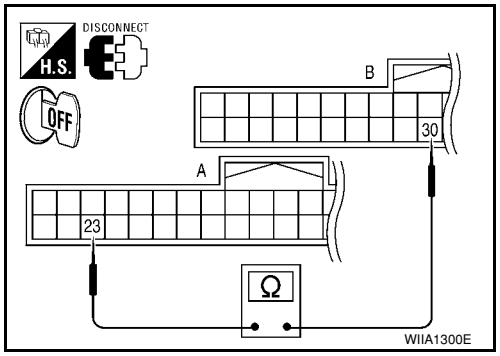

OK or NG

OK >> Door switch circuit is OK.
NG >> Repair or replace harness.

Diagnosis Procedure 2

INFOID:0000000001704095

SECURITY INDICATOR LAMP CHECK

1. SECURITY INDICATOR LAMP ACTIVE TEST

With CONSULT-III

Check "THEFT IND" in "ACTIVE TEST" mode with CONSULT-III.

Without CONSULT-III

1. Disconnect BCM.
2. Check voltage between BCM harness connector M18 terminal 23 and ground.

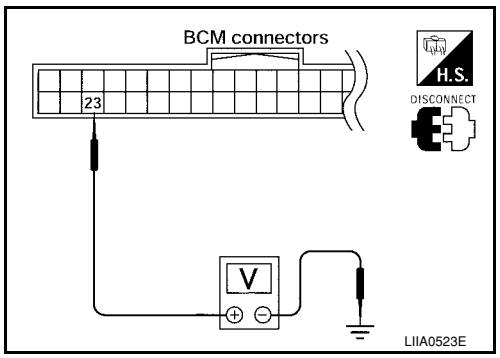

Connector	Terminals		Condition	Voltage (V) (Approx.)
	(+)	(-)		
M18	23	Ground	ON	0
			OFF	Battery voltage

OK or NG

OK >> Security indicator lamp is OK.
NG >> GO TO 2.

2. SECURITY INDICATOR LAMP CHECK

Check security indicator lamp condition.

OK or NG

OK >> GO TO 3.
NG >> Replace security indicator lamp.

3. CHECK HARNESS CONTINUITY

1. Turn ignition switch OFF.
2. Disconnect BCM and combination meter.

3. Check continuity between BCM connector (A) M18 terminal 23 and combination meter connector (B) M24 terminal 18.

23 - 18 : Continuity should exist.

4. Check continuity between BCM connector (A) M18 terminal 23 and ground.

23 - Ground : Continuity should not exist.

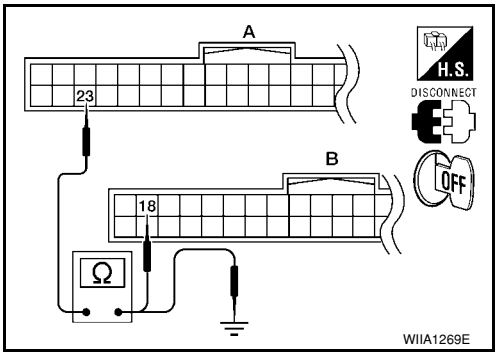

OK or NG

OK >> Check the following:
- 10A fuse [No. 13, located in fuse block (J/B)]
- Harness for open or short between combination meter and fuse

NG >> Repair or replace harness.

Diagnosis Procedure 3

INFOID:0000000001704096

1. FRONT DOOR LOCK ASSEMBLY LH (KEY CYLINDER SWITCH) CHECK

Check front door lock assembly LH (key cylinder switch) with key.

Do doors lock/unlock when using the key?

YES >> Front door lock assembly LH (key cylinder switch) is OK.

NO >> Check front door lock assembly LH (key cylinder switch) circuit. Refer to BL-47, "Front Door Key Cylinder Switch LH Check".

Diagnosis Procedure 4

INFOID:0000000001704097

VEHICLE SECURITY HORN ALARM CHECK

1. CHECK HORN OPERATION

Check if horn sounds with horn switch.

Does horn operate?

YES >> Check harness for open or short between IPDM E/R and horn relay.

NO >> Check horn circuit. Refer to WW-37.

Diagnosis Procedure 5

INFOID:0000000001704098

VEHICLE SECURITY HEADLAMP ALARM CHECK

1. CHECK VEHICLE SECURITY HEADLAMP ALARM OPERATION

Check if headlamps operate with lighting switch.

Do headlamps come on when turning switch ON?

YES >> Headlamp alarm is OK.

NO >> Check headlamp system. Refer to LT-4 or LT-25.

Diagnosis Procedure 6

INFOID:0000000001704099

DOOR LOCK/UNLOCK SWITCH CHECK

1. CHECK DOOR LOCK/UNLOCK SWITCH INPUT SIGNAL

Check if power door lock operates with door lock/unlock switch.

Do doors lock/unlock when using each door lock/unlock switch?

YES >> Door lock/unlock switch is OK.

NO >> Refer to BL-42, "Door Lock and Unlock Switch Check".

Diagnosis Procedure 7

INFOID:0000000001704100

DOOR SWITCH CHECK (SEDAN)

1. CHECK DOOR SWITCHES INPUT SIGNAL

With CONSULT-III
Check door switches ("DOOR SW-DR", "DOOR SW-AS", "DOOR SW-RL", "DOOR SW-RR") in DATA MONITOR mode with CONSULT–III. Refer to BL-196, "CONSULT-III Function (BCM)".

- When doors are open:

DOOR SW-DR	**: ON**
DOOR SW-AS	**: ON**
DOOR SW-RL	**: ON**
DOOR SW-RR	**: ON**

- When doors are closed:

DOOR SW-DR	**: OFF**
DOOR SW-AS	**: OFF**
DOOR SW-RL	**: OFF**
DOOR SW-RR	**: OFF**

Without CONSULT-III
Check voltage between BCM connector M18 or M19 terminals 12, 13, 47, 48 and ground.

Connector	Item	Terminals (+)	Terminals (–)	Condition	Voltage (V) (Approx.)
M19	Front door switch LH	47	Ground	Open ↓ Closed	0 ↓ Battery voltage
	Rear door switch LH	48			
M18	Front door switch RH	12			
	Rear door switch RH	13			

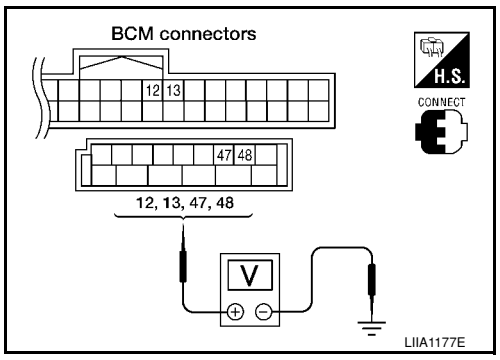

OK or NG

OK >> Door switch circuit is OK.
NG >> GO TO 2.

2. CHECK DOOR SWITCH CIRCUIT

1. Turn ignition switch OFF.
2. Disconnect door switch and BCM.
3. Check continuity between door switch connector B8 (Front LH) or B108 (Front RH) terminal 2, B6 (Rear LH) or B116 (Rear RH) terminal 1 and BCM connector M18, M19 terminals 12, 13, 47 and 48.

2 - 47	**: Continuity should exist.**
2 - 12	**: Continuity should exist.**
1 - 48	**: Continuity should exist.**
1 - 13	**: Continuity should exist.**

4. Check continuity between door switch connector B8 (Front LH) or B108 (Front RH) terminal 2, B6 (Rear LH) or B116 (Rear RH) terminal 1 and ground.

2 - Ground	**: Continuity should not exist.**
1 - Ground	**: Continuity should not exist.**

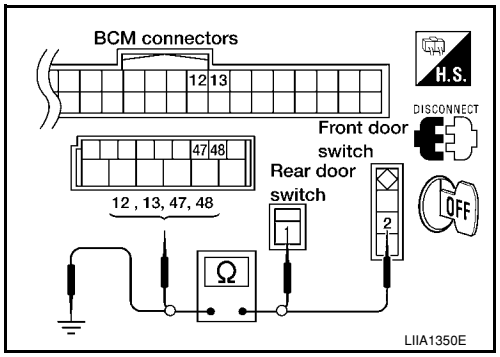

OK or NG

OK >> GO TO 3.
NG >> Repair or replace harness.

3. CHECK DOOR SWITCHES

Check continuity between door switch terminal and switch case ground.

Component	Terminals	Condition of switch	Continuity
Front door switch LH/RH	2 – Case ground	Pushed	No
		Released	Yes
Rear door switch LH/RH	1 – Case ground	Pushed	No
		Released	Yes

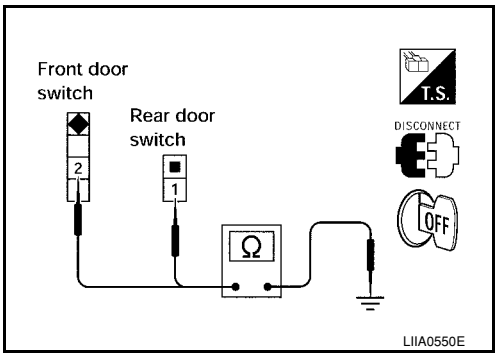

OK or NG

OK >> Check door switch case ground condition.
NG >> Replace door switch.

Diagnosis Procedure 8

INFOID:0000000001704101

TRUNK LAMP SWITCH CHECK (SEDAN)

1. CHECK TRUNK LAMP SWITCH AND TRUNK RELEASE SOLENOID INPUT SIGNAL

With CONSULT-III

Check (“TRNK OPN MNTR”) in “DATA MONITOR” mode with CONSULT-III.

Monitor item	Trunk condition	
TRNK OPN MNTR	OPEN	: ON
	CLOSED	: OFF

Without CONSULT-III

1. Turn ignition switch OFF.
2. Check voltage between BCM harness connector M19 terminal 42 and ground.

Connector	Terminals		Trunk condition	Voltage (V) (Approx.)
	(+)	(-)		
M19	42	Ground	CLOSED	Battery voltage
			OPEN	0

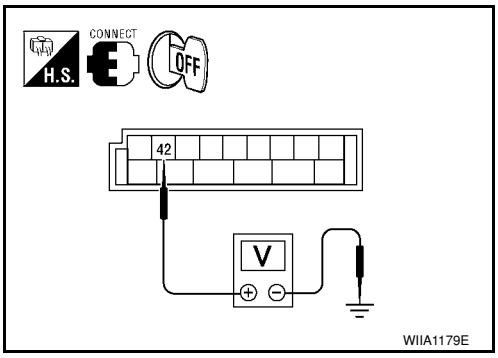

OK or NG

OK >> Trunk lamp switch and trunk release solenoid circuit is OK.
NG >> GO TO 2.

2. CHECK TRUNK LAMP SWITCH AND TRUNK RELEASE SOLENOID

1. Turn ignition switch OFF.
2. Disconnect trunk lamp switch and trunk release solenoid connector.
3. Check continuity between trunk lamp switch and trunk release solenoid terminals 1 and 3.

Terminals		Trunk condition	Continuity
1	3	CLOSED	No
		OPEN	Yes

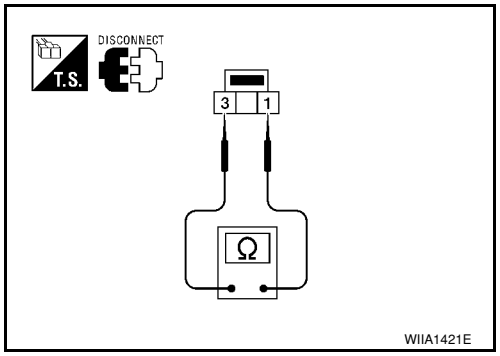

OK or NG

OK >> GO TO 3.
NG >> Replace trunk lamp switch and trunk release solenoid.

3. CHECK TRUNK LAMP SWITCH AND TRUNK RELEASE SOLENOID CIRCUIT

1. Disconnect BCM connector M19.
2. Check continuity between BCM harness connector M19 (A) terminal 42 and trunk room lamp switch harness connector B127 (B) terminal 3.

42 – 3 : Continuity should exist.

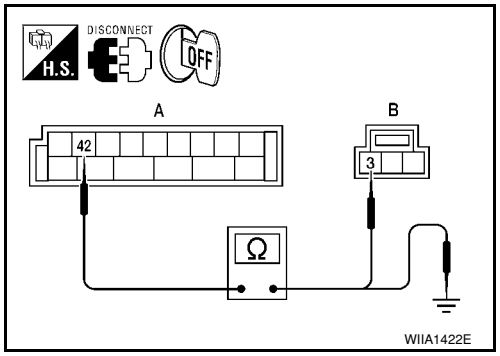

3. Check continuity between BCM harness connector M19 (A) terminal 42 and ground.

42 – Ground : Continuity should not exist.

OK or NG

OK >> GO TO 4.
NG >> Repair or replace harness between BCM and trunk room lamp switch.

4. CHECK TRUNK LAMP SWITCH AND TRUNK RELEASE SOLENOID GROUND CIRCUIT

Check continuity between trunk room lamp switch harness connector B127 terminal 1 and ground.

1 – Ground : Continuity should exist.

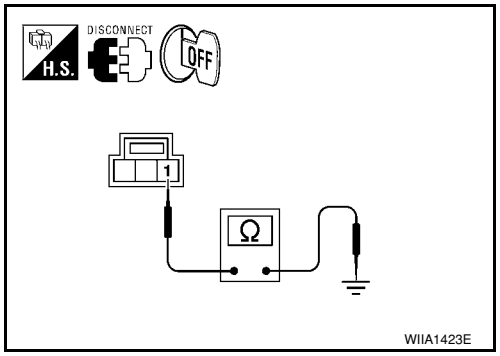

OK or NG

OK >> Check connection of harness and connector.
NG >> Repair or replace trunk lamp switch and trunk release solenoid ground circuit.

Diagnosis Procedure 9

INFOID:0000000001704102

TRUNK KEY CYLINDER SWITCH CHECK (SEDAN)

1. CHECK TRUNK KEY CYLINDER SWITCH

With CONSULT-III

Check trunk key cylinder switch ("TRUNK CYL SW") in DATA MONITOR mode in CONSULT–III. Refer to BL-36, "CONSULT-III Function (BCM)".

- When key inserted in trunk key cylinder is turned to FULL STROKE:

TRUNK CYL SW : ON

- When key is removed from the trunk key cylinder:

TRUNK CYL SW : OFF

Without CONSULT-III

Check voltage between BCM connector M19 terminal 41 and ground.

Connector	Terminals		Condition	Voltage (V) (Approx.)
	(+)	(–)		
M19	41	Ground	Neutral (N)	5
			Full stroke (open)	0

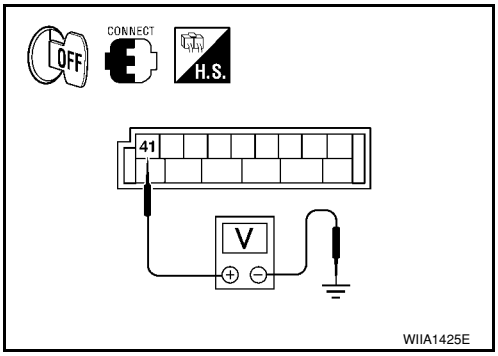

OK or NG

OK >> Trunk key cylinder switch signal is OK.
NG >> GO TO 2.

2. CHECK TRUNK KEY CYLINDER SWITCH GROUND HARNESS

1. Turn ignition switch OFF.
2. Disconnect trunk key cylinder switch.
3. Check continuity between trunk key cylinder switch connector B142 terminal 2 and body ground.

Connector	Terminals	Continuity
B142	2 – Ground	Yes

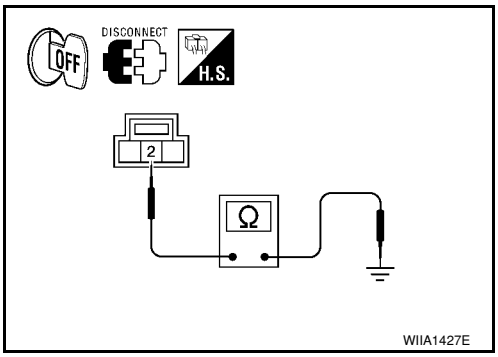

OK or NG

OK >> GO TO 3.
NG >> Repair or replace harness.

3. CHECK TRUNK KEY CYLINDER SWITCH

Check continuity between trunk key cylinder switch terminals.

Terminals	Trunk key cylinder switch position	Continuity
1 – 2	Neutral (N)	No
	Full Stroke (open)	Yes

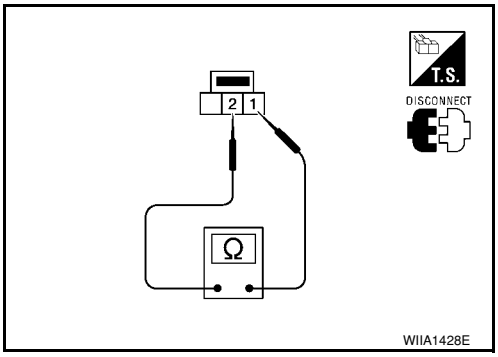

OK or NG

OK >> GO TO 4.
NG >> Replace trunk key cylinder switch.

4. CHECK TRUNK KEY CYLINDER HARNESS

1. Disconnect BCM connector M19.

2. Check continuity between BCM connector (A) M19 terminal 41 and trunk key cylinder switch connector (B) B142 terminal 1 and body ground.

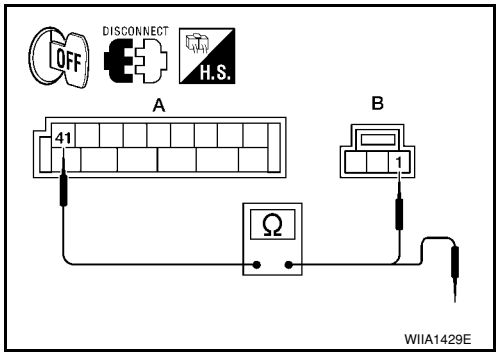

Connector	Terminal	Connector	Terminal	Continuity
A: M19	41	B: B142	1	Yes
		Ground		No

OK or NG

OK >> Trunk key cylinder switch circuit is OK.
NG >> Repair or replace harness.

NATS (NISSAN ANTI-THEFT SYSTEM)

Component Parts and Harness Connector Location

INFOID:0000000001704103

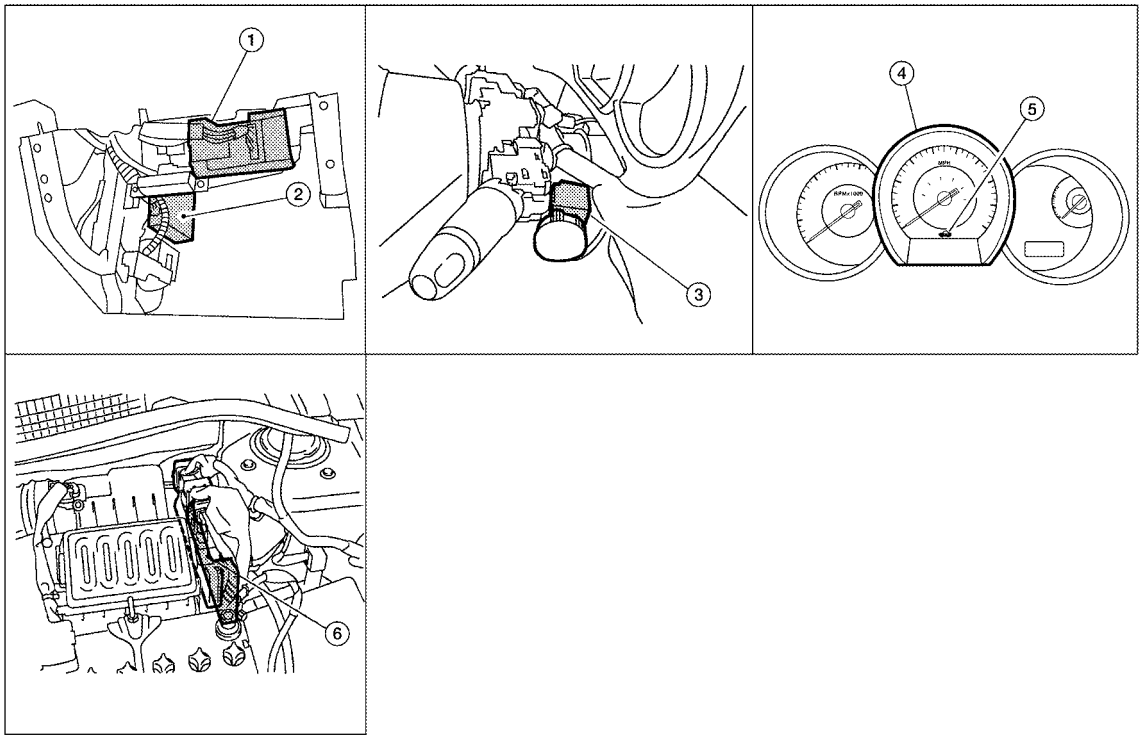

LIIA2920E

1. BCM M18, M19, M20 (view with glove box removed)
2. Intelligent Key unit M52 (if equipped)
3. NATS antenna amp. M21 (inside steering column)
4. Combination meter M24
5. Security indicator lamp
6. ECM E16

System Description

INFOID:0000000001704104

DESCRIPTION

NOTE:

If customer reports a "No start" condition, request ALL KEYS to be brought to a Nissan dealer in case of a NATS malfunction.

NATS (Nissan Anti-Theft System) has the following functions:

- NATS shows a higher anti-theft performance at preventing engine to be started by an unregistered key. (registered key: mechanical key and Intelligent Key).
- Only a key with key ID registered in BCM and ECM can start engine, it has a higher protection against auto theft that duplicates keys.
- If a malfunction has been detected, security indicator will illuminate when ignition switch is in ON position.
- If the owner requires, mechanical key can be registered for up to 5 keys.
- During trouble diagnosis or when the following parts have been replaced, and if mechanical key is added, registration* is required.
  *: All mechanical keys of the vehicle should be registered.

- ECM

- BCM
- Mechanical key
- NATS trouble diagnoses, system initialization and additional registration of other NATS mechanical key IDs must be carried out using CONSULT-III hardware and CONSULT-III NATS software. When NATS initialization has been completed, the ID of the inserted mechanical key can be displayed.
  Regarding the procedures of NATS initialization and mechanical key ID registration, refer to CONSULT-III operation manual NATS.

SECURITY INDICATOR

- Forewarns that the vehicle is equipped with NATS.
- Security indicator will not blink while the ignition knob is in ON or START state.
  NOTE:
  Because security indicator is highly efficient, the battery is barely affected.

Condition of Security Indicator

- When operating the ignition switch with Intelligent Key, security indicator lamp will turn off at once if ignition switch is pressed and blinks when ignition switch is released.
- When operating the ignition switch with mechanical key security indicator will turn off at once if mechanical key is inserted into key cylinder and blinks when mechanical key is removed.
  (Once the mechanical key is inserted into key cylinder, BCM will only perform the key ID verification with mechanical key)

System Composition

INFOID:0000000001704105

The function of the NATS consists of the following:

- Mechanical key
- NATS antenna amp. located in the ignition key cylinder
- BCM
- ECM (Engine control module)
- Security indicator
- Intelligent Key unit (if equipped)

NOTE:
The communication between ECM, BCM and/or Intelligent Key unit uses the CAN communication system.

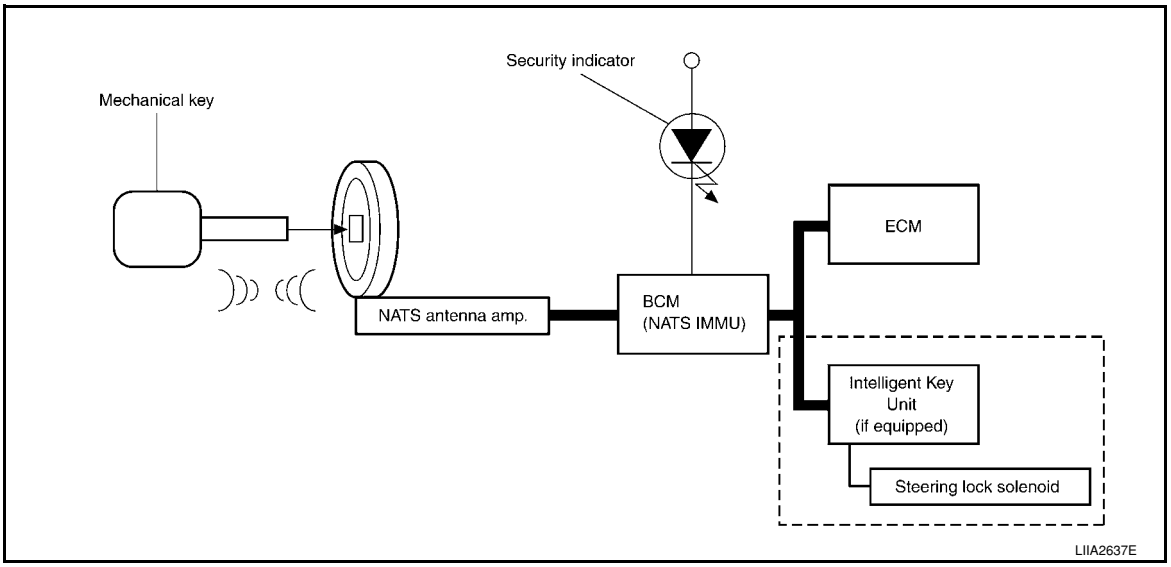

ECM Re-communicating Function

INFOID:0000000001704106

Performing the following procedure can automatically perform re-communication of ECM and BCM or Intelligent Key unit, but only when the ECM has been replaced with a new one which has never been energized on-board.
(In this step, initialization procedure by CONSULT-III is not necessary)

NOTE:

- **When registering new Key IDs or replacing the ECM other than brand new, refer to CONSULT-III Operation Manual NATS.**

- **If multiple keys are attached to the key holder, separate them before work.**
- **Distinguish keys with unregistered key ID from those with registered ID.**

1. Install ECM.
2. Use a registered key (*), turn ignition switch to “ON”.
   *: To perform this step, use the key that has been used before to perform ECM replacement.
3. Maintain ignition switch in “ON” position for at least 5 seconds.
4. Turn ignition switch to “OFF”.
5. Start engine.
   If engine can be started, procedure is completed.
   If engine cannot be started, refer to CONSULT-III Operation Manual NATS and initialize control unit.

Wiring Diagram - NATS -

INFOID:0000000001704107

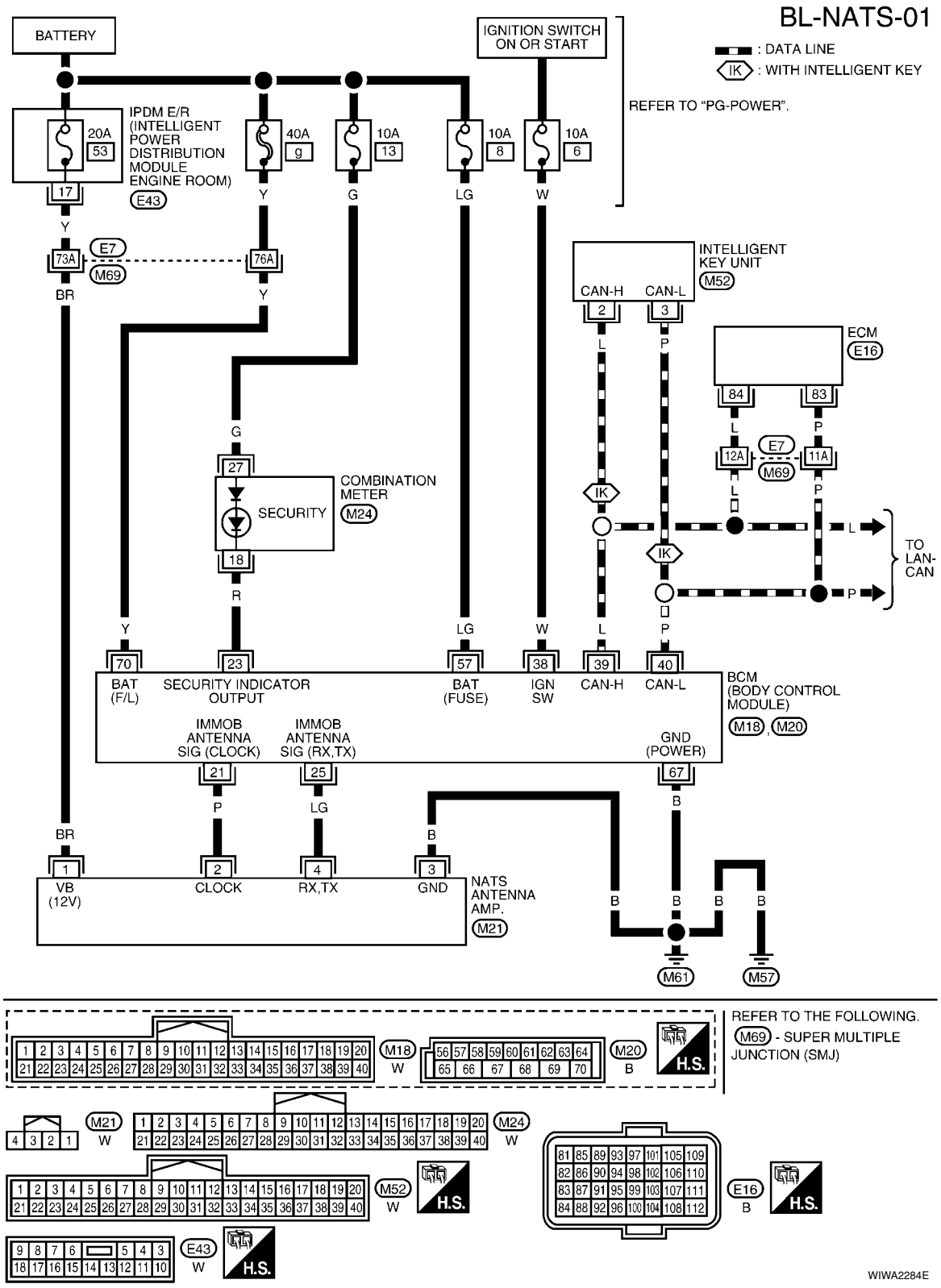

Terminal and Reference Value for BCM

INFOID:0000000001704108

Refer to BCS-11, "Terminal and Reference Value for BCM" .

CONSULT-III Function

INFOID:0000000001704109

CONSULT-III INSPECTION PROCEDURE

1. Turn ignition switch OFF.
2. Insert NATS program card into CONSULT-III.

Program card : NATS (AEN06B) or later

3. Connect CONSULT-III to data link connector.

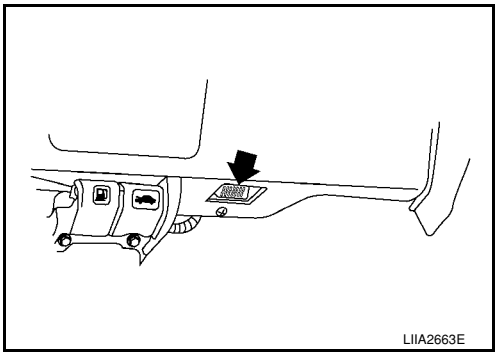

4. Turn ignition switch ON.
5. Touch “START”.
6. Touch “OTHER”.
7. Select “NATS V.5.0”.
   If “NATS V5.0” is not indicated, go to GI-36, "CONSULT-III Data Link Connector (DLC) Circuit" .
8. Perform each diagnostic test mode according to each service procedure.

For further information, see the CONSULT-III Operation Manual NATS.

CONSULT-III DIAGNOSTIC TEST MODE FUNCTION

CONSULT-III DIAGNOSTIC TEST MODE	Description
C/U INITIALIZATION	When replacing any of the following components, C/U initialization and re-registration of all NATS mechanical keys are necessary. [NATS mechanical key/ BCM/ ECM*]
SELF-DIAG RESULTS	Detected items (screen terms) are as shown in the chart. Refer to "NATS SELF-DIAGNOSTIC RESULTS ITEM CHART" .

*: When replace ECM, refer to BL-211, "ECM Re-communicating Function" .

NOTE:

- When any initialization is performed, all ID previously registered will be erased and all NATS mechanical keys must be registered again.
- The engine cannot be started with an unregistered key. In this case, the system will show “DIFFERENCE OF KEY” or “LOCK MODE” as a self-diagnostic result on the CONSULT-III screen.
- In rare case, “CHAIN OF ECM-IMMU” might be stored as a self-diagnostic result during key registration procedure, even if the system is not malfunctioning.

NATS SELF-DIAGNOSTIC RESULTS ITEM CHART

Detected items [NATS program card screen terms]	P No. Code (Self-diagnostic result of “ENGINE”)	Malfunction is detected when.....	Reference page
CHAIN OF ECM-IMMU [P1612]	NATS MALFUNCTION P1612	Communication impossible between ECM and BCM In rare case, “CHAIN OF ECM-IMMU” might be stored during key registration procedure, even if the system is not malfunctioning.	BL-218
CHAIN OF IMMU-KEY [P1614]	NATS MALFUNCTION P1614	BCM cannot receive the key ID signal.	BL-220
ID DISCORD, IMM-ECM [P1611]	NATS MALFUNCTION P1611	The result of ID verification between BCM and ECM is NG. System initialization is required.	BL-221

Detected items [NATS program card screen terms]	P No. Code (Self-diagnostic result of "ENGINE")	Malfunction is detected when.....	Reference page
LOCK MODE [P1610]	NATS MALFUNCTION P1610	When the starting operation is carried out five or more times consecutively under the following conditions, NATS will shift the mode to one which prevents the engine from being started. • Unregistered mechanical key is used. • BCM or ECM's malfunctioning.	BL-223
DON'T ERASE BEFORE CHECKING ENG DIAG	—	All engine trouble codes except NATS trouble code has been detected in ECM.	BL-215

Trouble Diagnosis Procedure

INFOID:0000000001704110

PRELIMINARY CHECK

1. GET SYMPTOMS

Listen to customer complaints request. (Get symptoms)

NOTE:

If customer reports a "No start" condition, request all Intelligent Keys to be brought to the dealer in case of Intelligent Key system malfunction.

Intelligent Key or mechanical key service request>> For further information, refer to CONSULT-III operation manual.

Malfunctions>>GO TO 2.

2. START ENGINE WITH INTELLIGENT KEY (IF EQUIPPED)

Check if the engine could be started by all registered Intelligent Keys.

The engine cannot be started by some Intelligent Keys>>Intelligent Key is low battery or malfunction. Refer to BL-142, "Intelligent Key Battery Replacement" .

The engine cannot be started by all Intelligent Keys>>GO TO 3.

The engine can be started by all Intelligent Keys>>GO TO 4.

3. CHECK "KEY" WARNING LAMP ILLUMINATION

When pushing the ignition switch, check if "KEY" warning lamp in combination meter illuminates.

KEY warning lamp illuminates green>>GO TO BL-103, "Trouble Diagnosis Symptom Chart" .

KEY warning lamp illuminates red>>GO TO BL-103, "Trouble Diagnosis Symptom Chart" .

Does not illuminate>>GO TO BL-103, "Trouble Diagnosis Symptom Chart" .

4. START ENGINE WITH MECHANICAL KEY

Check if the engine could be started by all registered mechanical keys.

The engine can not be started by some mechanical keys>>Register mechanical key. Refer to CONSULT-III operation manual.

The engine cannot be started by all mechanical keys>> "WORK FLOW" .

The engine can be started by all mechanical keys>>GO TO 5.

5. PERFORM SELF-DIAGNOSIS

1. Turn ignition switch to ON by carrying the Intelligent Key.
2. Perform self-diagnosis of Intelligent Key system with CONSULT-III.

Malfunction is detected>>GO TO BL-101, "CONSULT-III Application Item" .

No malfunction is detected>>GO TO BL-99, "Trouble Diagnosis Procedure" .

WORK FLOW

1. STARTING ENGINE

Check if the engine could be started by inserting the mechanical key into the ignition key cylinder and operate ignition switch.

OK >> System is normal.
NG >> GO TO 2.

2. PERFORM SELF DIAGNOSIS

Perform SELF-DIAGNOSIS “NATS V5.0” using CONSULT-III.
NOTE:
NATS program card is necessary to display the “SELF-DIAGNOSIS”.

No malfunction is detected>>Recheck the starting engine section GO TO 1.
Malfunction related to NATS is detected>>GO TO 3.
Malfunctions related to “DON’T ERASE BEFORE CHECKING ENG DIAG” and NATS are detected>>GO TO 7.

3. IDENTIFYING NATS MALFUNCTION

Self-diagnosis results referring to NATS, but no information about engine self-diagnosis result is displayed on CONSULT-III. Refer to BL-217, "Trouble Diagnosis" .

>> GO TO 4.

4. NATS TROUBLE DIAGNOSIS

Repair NATS (if necessary, perform “C/U INITIALIZATION” with CONSULT-III.)

>> GO TO 5.

5. ERASE SELF-DIAGNOSIS

Erase the record of “SELF-DIAGNOSIS” by using CONSULT-III.

>> GO TO 6.

6. STARTING ENGINE

Check if the engine could be started by inserting the mechanical key into the ignition key cylinder and operate ignition switch.

NG >> GO TO 2.
OK >> End of inspection.

7. IDENTIFYING NATS AND ENGINE CONTROL MALFUNCTION

NATS malfunction and “DON’T ERASE BEFORE CHECKING ENG DIAG” are displayed on the CONSULT-III screen.
NOTE:
This indication means that malfunction have been detected in NATS and engine control system.

>> GO TO 8.

8. NATS TROUBLE DIAGNOSIS

Repair NATS according to self-diagnosis results refer to NATS (if necessary, perform “C/U INITIALZATIN” with CONSULT-III.)
NOTE:
Do not erase “SELF-DIAGNOSIS” by using CONSULT-III.

>> GO TO 9.

9. IDENTIFYING ENGINE CONTROL MALFUNCTION

Check engine “SELF-DIAGNOSIS” records with a generalized program card instead of the NATS program card.

>> GO TO 10.

10. ENGINE CONTROL SYSTEM TROUBLE DIAGNOSIS

Repair engine control system if engine related malfunction is detected.
With engine diagnostic codes present, refer to EC-9 .
Without engine diagnostic codes present, refer to EC-81 .

NOTE:
If only “NATS MALFUNCTION” is displayed, erase the self-diagnosis results.

>> GO TO 11.

11. STARTING ENGINE

Check if the engine could be started by inserting the mechanical key into the ignition key cylinder and operate ignition switch.

OK >> GO TO 12.
NG >> GO TO 2.

12. ERASE SELF-DIAGNOSIS

Erase both NATS and ENGINE "SELF-DIAGNOSIS" records by using CONSULT-III NATS program card and generalized program card.

>> GO TO 13

13. COMFIRMATION

Perform running test with CONSULT-III in engine “SELF-DIAGNOSIS” mode.

“NO DTC” is displayed>> End of inspection.
Malfunction information is displayed>>GO TO 2.

Trouble Diagnosis

INFOID:0000000001704111

SYMPTOM MATRIX CHART 1

Self-diagnosis related item

SYMPTOM	Displayed "SELF-DIAG RESULTS" on CONSULT-III screen.	DIAGNOSTIC PROCEDURE (Reference page)	SYSTEM (Malfunctioning part or mode)
• Security indicator lighting up* • Engine cannot be started	CHAIN OF ECM-IMMU [P1612]	PROCEDURE 1 (BL-218)	In rare case, "CHAIN OF ECM-IMMU" might be stored during key registration procedure, even if the system is not malfunctioning.
			Open circuit in battery voltage line of BCM circuit
			Open circuit in ignition line of BCM circuit
			Open circuit in ground line of BCM circuit
			Open or short circuit between BCM and ECM communication line
			ECM
			BCM
	CHAIN OF IMMU-KEY [P1614]	PROCEDURE 2 (BL-220)	Malfunction of key ID chip
			Communication line between ANT/ AMP and BCM: Open circuit or short circuit of battery voltage line or ground line
			Open circuit in power source line of ANT/ AMP circuit
			Open circuit in ground line of ANT/ AMP circuit
			NATS antenna amp.
			BCM
	ID DISCORD, IMM-ECM [P1611]	PROCEDURE 3 (BL-221)	System initialization has not yet been completed.
			ECM
	LOCK MODE [P1610]	PROCEDURE 5 (BL-223)	When the starting operation is carried out five or more times consecutively under the following conditions, NATS will shift the mode to one which prevents the engine from being started. • Unregistered ignition key is used. • BCM or ECM's malfunctioning.
Security indicator lighting up*	DON'T ERASE BEFORE CHECKING ENG DIAG	WORK FLOW (BL-215)	Engine trouble data and NATS trouble data have been detected in ECM

• *: When NATS detects trouble, the security indicator lights up while ignition key is in the "ON" position.

SYMPTOM MATRIX CHART 2

Non self-diagnosis related item

SYMPTOM	DIAGNOSTIC PROCEDURE (Reference page)	SYSTEM (Malfunctioning part or mode)
Security indicator does not light up*.	PROCEDURE 4 (BL-222)	Security indictor.
		Open circuit between Fuse and BCM
		BCM

*: CONSULT-III self-diagnostic results display screen "no malfunction is detected".

Diagnosis Procedure 1

INFOID:0000000001704112

Self-diagnostic results:
"CHAIN OF ECM-IMMU" displayed on CONSULT-III screen
First perform the "SELF-DIAG RESULTS" in "BCM" with CONSULT-III, then perform the trouble diagnosis of malfunction system indicated "SELF-DIAG RESULTS" of "BCM". Refer to BCS-17, "CAN Communication Inspection Using CONSULT-III (Self-Diagnosis)" .

1. CONFIRM SELF-DIAGNOSTIC RESULTS

Confirm SELF-DIAGNOSTIC RESULTS "CHAIN OF ECM-IMMU" displayed on CONSULT-III screen.
NOTE:

In rare case, “CHAIN OF ECM-IMMU” might be stored during key registration procedure, even if the system is not malfunctioning.

Is “CHAIN OF ECM-IMMU” displayed?

Yes >> GO TO 2.
No >> GO TO BL-217, "Trouble Diagnosis" .

2. CHECK POWER SUPPLY CIRCUIT FOR BCM

1. Turn ignition switch OFF.
2. Check voltage between BCM and ground with CONSULT-III or tester.

BCM connector	Terminals		Voltage [V] (Approx.)
	(+)	(–)	
M20	57	Ground	Battery voltage
	70		

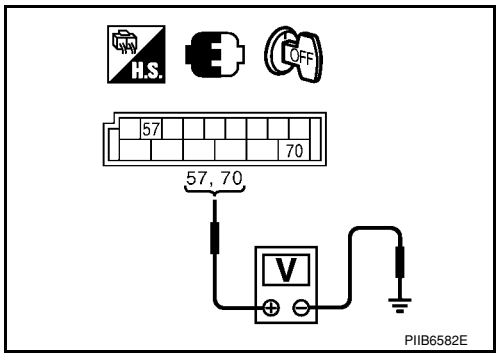

OK or NG

OK >> GO TO 3.
NG >> Check the following.
- 40A fusible link (letter **g** , located in the fuse and fusible link box).
- 10A fuse [No.8, located in the fuse block (J/B)].
- Harness for open or short between fusible link and BCM.
- Harness for open or short between fuse and BCM.

3. CHECK IGNITION SWITCH ON SIGNAL

1. Turn ignition switch ON.
2. Check voltage between BCM connector and ground with CONSULT-III or tester.

BCM connector	Terminal		Voltage [V] (Approx.)
	(+)	(–)	
M18	38	Ground	Battery voltage

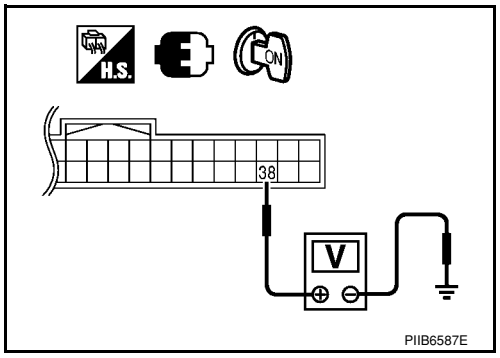

OK or NG

OK >> GO TO 4.
NG >> Check the following.
- 10A fuse [No. 6, located in the fuse block (J/B)].
- Harness for open or short between fuse and BCM.

4. CHECK GROUND CIRCUIT FOR BCM

1. Turn ignition switch OFF.
2. Disconnect BCM connector.
3. Check continuity between BCM connector and ground.

BCM connector	Terminal		Continuity
	(+)	(–)	
M20	67	Ground	Yes

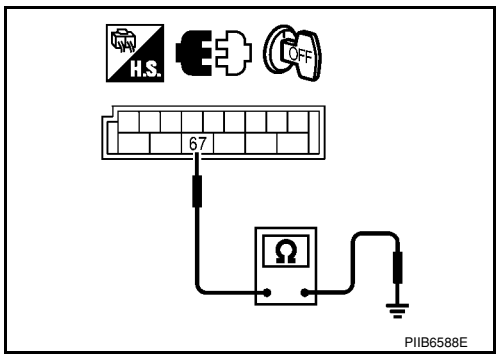

OK or NG

OK >> GO TO 5.
NG >> Repair or replace harness.

5. REPLACE BCM

1. Replace BCM
2. Perform initialization with CONSULT-III.

For initialization, refer to “CONSULT-III Operation Manual NATS”.

Does the engine start?

Yes >> BCM is malfunctioning.
- Replace BCM. Refer to BCS-18, "Removal and Installation of BCM" .
- Perform initialization with CONSULT-III
- For initialization, refer to “CONSULT-III Operation Manual NATS”

No >> ECM is malfunctioning.
- Replace ECM.
- Perform initialization or re-communicating function
- For initialization, refer to “CONSULT-III Operation Manual NATS”
- For re-communicating function, refer to BL-211, "ECM Re-communicating Function"

Diagnosis Procedure 2

INFOID:0000000001704113

Self-diagnostic results:
“CHAIN OF IMMU-KEY” displayed on CONSULT-III screen

1. CONFIRM SELF-DIAGNOSTIC RESULTS

Confirm SELF-DIAGNOSTIC RESULTS “CHAIN OF IMMU-KEY” displayed on CONSULT-III screen.

Is “CHAIN OF IMMU-KEY” displayed?

Yes >> GO TO 2.
No >> GO TO BL-217, "Trouble Diagnosis" .

2. CHECK NATS ANTENNA AMP. INSTALLATION

Check NATS antenna amp. installation. Refer to BL-224, "How to Replace NATS Antenna Amp" .

OK or NG

OK >> GO TO 3.
NG >> Reinstall NATS antenna amp. correctly.

3. CHECK NATS IGNITION KEY ID CHIP

Start engine with another registered NATS ignition key.

Does the engine start?

Yes >> Ignition key ID chip is malfunctioning.
- Replace the ignition key
- Perform initialization with CONSULT-III
  For initialization, refer to “CONSULT-III Operation Manual NATS”

No >> GO TO 4.

4. CHECK POWER SUPPLY FOR NATS ANTENNA AMP.

1. Turn ignition switch “OFF”.
2. Check voltage between NATS antenna amp. connector and ground.

NATS antenna amp. connector	Terminal		Voltage [V] (Approx.)
	(+)	(–)	
M21	1	Ground	Battery voltage

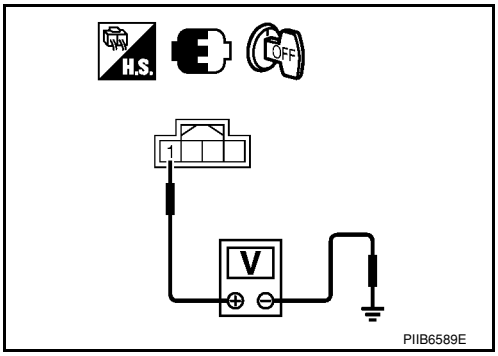

OK or NG

OK >> GO TO 5.
NG >> Check the following.
- 20A fuse [No. 53, located in IPDM E/R]
- Harness for open or short between fuse and NATS antenna amp.

5. CHECK NATS ANTENNA AMP. SIGNAL LINE- 1

Check voltage between NATS antenna amp. connector and ground with analog tester.

NATS antenna amp. connector	Terminal		Conditions	Status of Voltage and tester
	(+)	(–)		
M21	2	Ground	Before tuning ignition switch to ON	Approx. 0 [V]
			Right after tuning ignition switch to ON	Pointer of tester should move

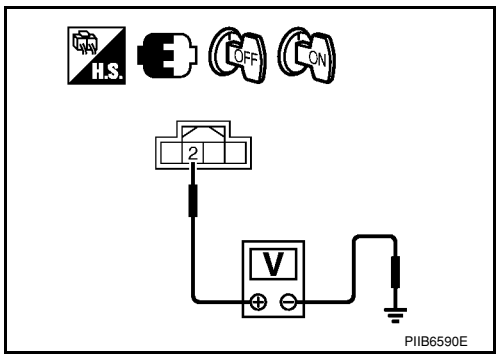

OK or NG

OK >> GO TO 6.

NG >> • Check harness for open or short between NATS antenna amp. and BCM.

NOTE:

If harness is OK, replace BCM, perform initialization with CONSULT-III. For initialization, refer to "CONSULT-III Operation Manual NATS".

6. CHECK NATS ANTENNA AMP. SIGNAL LINE- 2

Check voltage between NATS antenna amp. connector and ground with analog tester.

NATS antenna amp. connector	Terminal		Conditions	Status of Voltage and tester
	(+)	(–)		
M21	4	Ground	Before tuning ignition switch to ON	Approx. 0 [V]
			Right after tuning ignition switch to ON	Pointer of tester should move

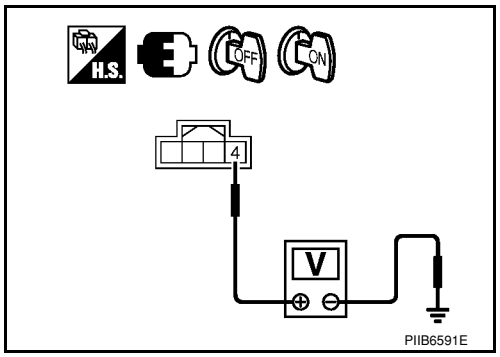

OK or NG

OK >> GO TO 7.

NG >> • Check harness for open or short between NATS antenna amp. and BCM.

NOTE:

If harness is OK, replace BCM, perform initialization with CONSULT-III. For initialization, refer to "CONSULT-III Operation Manual NATS".

7. CHECK NATS ANTENNA AMP. GROUND LINE CIRCUIT

1. Turn ignition switch "OFF".
2. Disconnect NATS antenna amp. connector.
3. Check continuity between NATS antenna amp. connector and ground.

NATS antenna amp. connector	Terminal		Continuity
	(+)	(–)	
M21	3	Ground	Yes

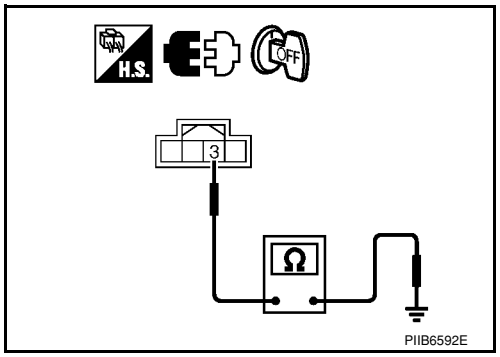

OK or NG

OK >> NATS antenna amp. is malfunctioning, reinstall antenna or replace it.

NG >> Repair or replace NATS antenna amp. ground circuit.

Diagnosis Procedure 3

INFOID:0000000001704114

Self-diagnostic results:
"ID DISCORD, IMM-ECM" displayed on CONSULT-III screen

1. CONFIRM SELF-DIAGNOSTIC RESULTS

Confirm SELF-DIAGNOSTIC RESULTS "ID DISCORD, IMM-ECM" displayed on CONSULT-III screen.

NOTE:

"ID DISCORD IMM-ECM":
Registered ID of BCM is in discord with that of ECM.

Is "ID DISCORD IMM-ECM" displayed?

Yes >> GO TO 2.
No >> GO TO BL-217, "Trouble Diagnosis" .

2. PERFORM INITIALIZATION WITH CONSULT-III

Perform initialization with CONSULT-III. Re-register all NATS ignition key IDs.
For initialization, refer to "CONSULT-III Operation Manual NATS".

NOTE:
If the initialization is not completed or malfunctions, CONSULT-III shows message on the screen.

Can the system be initialized?

Yes >>
- Start engine. (END)
- (System initialization had not been completed.)

No >> ECM is malfunctioning.
- Replace ECM.
- Perform initialization with CONSULT-III
  For initialization, refer to "CONSULT-III Operation Manual NATS"

Diagnosis Procedure 4

INFOID:0000000001704115

"COMBINATION METER (SECURITY) DOES NOT LIGHT UP"

1. CHECK FUSE

Check 10A fuse [No.13, located in the fuse block (J/B)]

OK or NG

OK >> GO TO 2.
NG >> Replace fuse.

2. CHECK COMBINATION METER (SECURITY)

1. Install 10A fuse.
2. Start engine and turn ignition switch OFF.
3. Check if the combination meter (security) lights up.

Combination meter (security) should light up.

OK or NG

OK >> INSPECTION END.
NG >> GO TO 3.

3. CHECK COMBINATION METER (SECURITY) POWER SUPPLY CIRCUIT

1. Disconnect combination meter (security) connector.
2. Check voltage between combination meter (security) connector and ground.

Combination meter (security) connector	Terminal		Voltage [V] (Approx.)
	(+)	(-)	
M24	27	Ground	Battery voltage

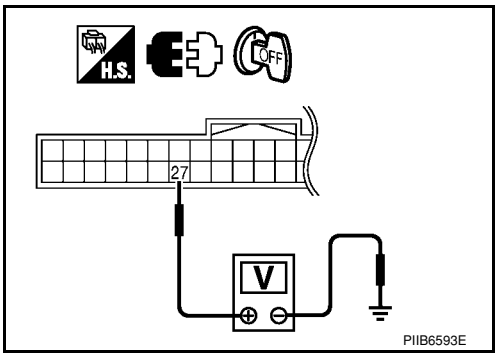

OK or NG

OK >> GO TO 4.
NG >> Check harness for open or short between fuse and combination meter (security).

4. CHECK BCM FUNCTION

1. Connect combination meter (security) connector.
2. Disconnect BCM connector.
3. Check voltage between BCM connector and ground.

BCM connector	Terminal		Voltage [V] (Approx.)
	(+)	(-)	
M18	23	Ground	Battery voltage

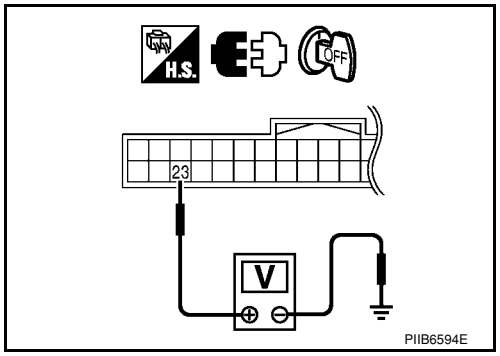

OK or NG

OK >> BCM is malfunctioning.
- Replace BCM. Refer to BCS-18, "Removal and Installation of BCM" .
- Perform initialization with CONSULT-III
- For initialization, refer to “CONSULT-III Operation Manual NATS”

NG >> Check the following.
- Harness for open or short between combination meter (security) and BCM
- Indicator lamp condition

Diagnosis Procedure 5

INFOID:0000000001704116

Self-diagnostic results:
“LOCK MODE” displayed on CONSULT-III screen

1. CONFIRM SELF-DIAGNOSTIC RESULTS

Confirm SELF-DIAGNOSTIC RESULTS “LOCK MODE” is displayed on CONSULT-III screen.

Is “LOCK MODE” displayed?

Yes >> GO TO 2.
No >> GO TO BL-217, "Trouble Diagnosis" .

2. ESCAPE FROM LOCK MODE

1. Turn ignition switch OFF.
2. Turn ignition switch ON with registered key. (Do not start engine.) Wait 5 seconds.
3. Return the key to OFF position. Wait 5 seconds.
4. Repeat steps 2 and 3 twice (total of three cycles).
5. Start the engine.

Does engine start?

Yes >> System is OK (Now system is escaped from “LOCK MODE”).
No >> GO TO 3.

3. PERFORM INITIALIZATION WITH CONSULT-III

Perform initialization with CONSULT-III.
For initialization, refer to “CONSULT-III Operation Manual NATS”.

NOTE:
If the initialization is not completed or malfunctions, CONSULT-III shows the message on the screen.

Can the system be initialized?

Yes >> System is OK.
No >> GO TO 4.

4. PERFORM INITIALIZATION WITH CONSULT-III AGAIN

1. Replace BCM.
2. Perform initialization with CONSULT-III.
   For initialization, refer to “CONSULT-III Operation Manual NATS”.

NOTE:
If the initialization is not completed or malfunctions, CONSULT-III shows the message on the screen.

Can the system be initialized?

Yes >> System is OK. (BCM is malfunctioning.)
No >> ECM is malfunctioning.
- Replace ECM.
- Perform initialization with CONSULT-III
- For initialization, refer to “CONSULT-III Operation Manual NATS”

How to Replace NATS Antenna Amp

INFOID:0000000001704117

NOTE:

- **If NATS antenna amp. is not installed correctly, NATS system will not operate properly and SELF-DIAG RESULTS on CONSULT-III screen will show “LOCK MODE” or “CHAIN OF IMMU-KEY”.**
- **Initialization is not necessary only when NATS antenna amp. is replaced with a new one.**

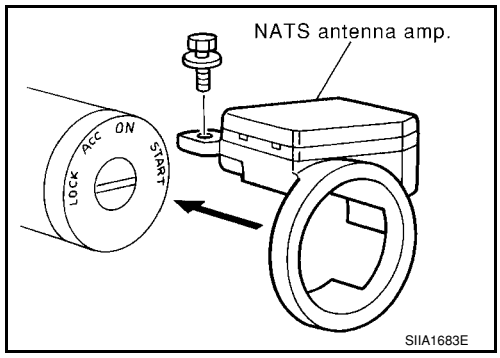

BODY REPAIR

Body Exterior Paint Color

INFOID:0000000001704118

Hatchback

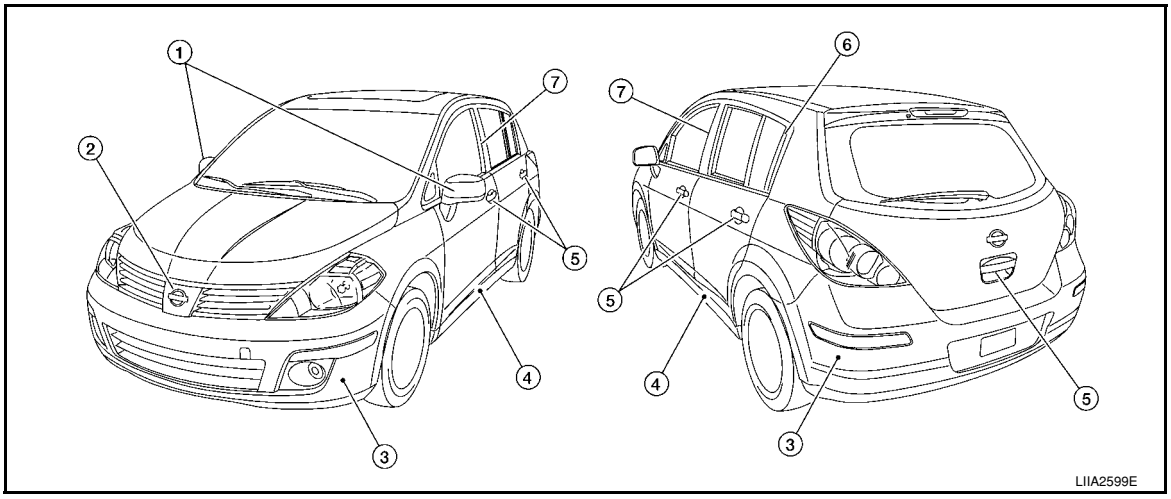

Component		Color code	A20	B14	B23	K23	K32	K36	KH3	QM1
		Description	Red Alert	Sapphire Blue	Blue Onyx	Brilliant Silver	Sandstone	Magnetic Grey	Super Black	Fresh Powder
		Paint type	2S	2M	2M	2M	2M	2M	2S	S
		Hard clear coat	—	—	—	—	—	—	—	—
1	Outside mirror	Body color	A20	B14	B23	K23	K32	K36	KH3	QM1
2	Radiator grille	Chromium-plate + Black	Cr2P + G02-1	Cr2P + G02-1	Cr2P + G02-1	Cr2P + G02-1	Cr2P + G02-1	Cr2P + G02-1	Cr2P + G02-1	Cr2P + G02-1
3	Bumper fascia	Body color	A20	B14	B23	K23	K32	K36	KH3	QM1
4	Center mudguard	Body color/ Black	A20/G01-1	B14/G01-1	B23/G01-1	K23/G01-1	K32/G01-1	K36/G01-1	KH3/G01-1	QM1/ G01-1
5	Outside handle	Body color	A20	B14	B23	K23	K32	K36	KH3	QM1
6	Rear pillar trim	Black	G01-1	G01-1	G01-1	G01-1	G01-1	G01-1	G01-1	G01-1
7	Door sash	Black tape	X	X	X	X	X	X	X	X

M: Metallic; 2S: 2-Coat Solid, 2P: 2-Coat Pearl; 3P: 3-Coat Pearl; G01-1: Material color; G02-1: Material color

Sedan

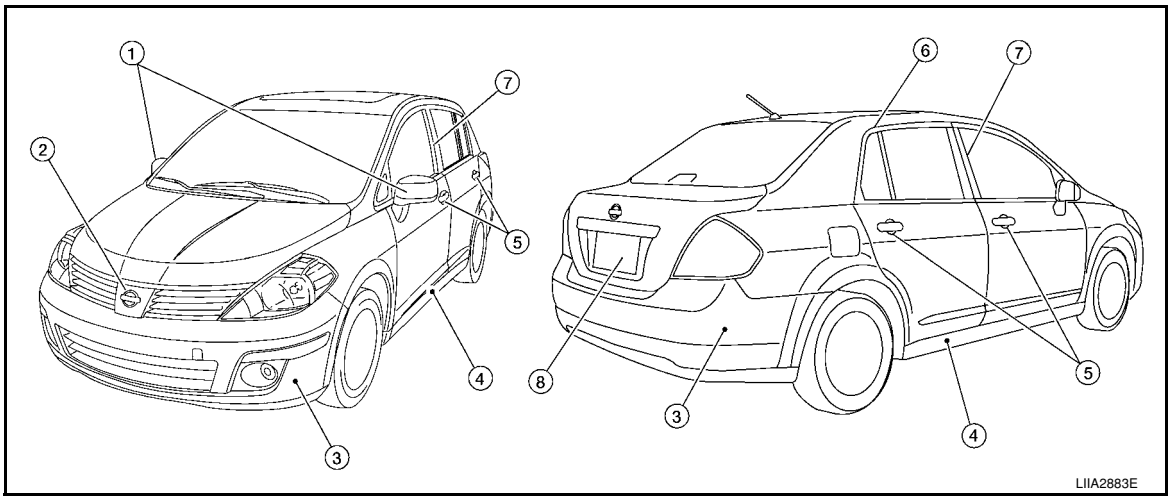

Component		Color code	A15	B23	K23	K32	K36	KH3	QM1
		Description	Sonoma Sunset	Blue Onyx	Brilliant Silver	Sandstone	Magnetic Grey	Super Black	Fresh Powder
		Paint type	Mt	2M	2M	2M	2M	2S	S
		Hard clear coat	—	—	—	—	—	—	—
1	Outside mirror	Body color	A15	B23	K23	K32	K36	KH3	QM1
2	Radiator grille	Chromium-plate + Black	Cr2P + G02-1	Cr2P + G02-1	Cr2P + G02-1	Cr2P + G02-1	Cr2P + G02-1	Cr2P + G02-1	Cr2P + G02-1
3	Bumper fascia	Body color	A15	B23	K23	K32	K36	KH3	QM1
4	Center mudguard	Body color/ Black	A20/G01-1	B23/G01-1	K23/G01-1	K32/G01-1	K36/G01-1	KH3/G01-1	QM1/ G01-1
5	Outside handle	Body color	A15	B23	K23	K32	K36	KH3	QM1
6	Rear pillar trim	Black	G01-1	G01-1	G01-1	G01-1	G01-1	G01-1	G01-1
7	Door sash	Black tape	X	X	X	X	X	X	X

M: Metallic; 2S: 2-Coat Solid, 2P: 2-Coat Pearl; 3P: 3-Coat Pearl; PM: Pearl Metallic; G01-1: Material color; G02-1: Material color, t - cross link clear coat

Body Component Parts

INFOID:0000000001704119

UNDERBODY COMPONENT PARTS

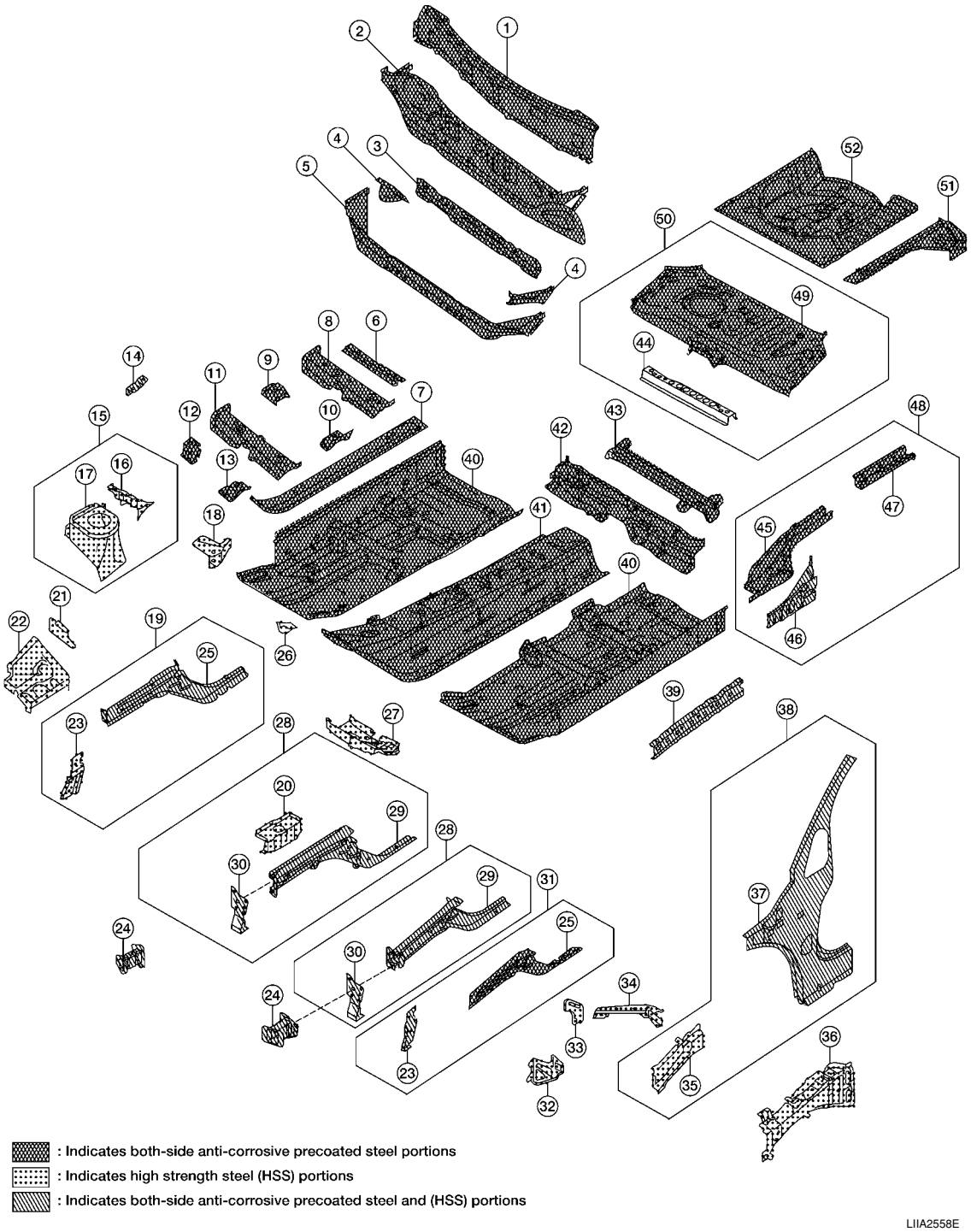

1. Upper dash assembly
2. Lower dash assembly
3. Lower dash crossmember

4. Front pillar inner reinforcement (RH&LH)
5. Lower dash reinforcement
6. 4th crossmember (RH&LH)
7. Front side member rear extension (RH&LH)
8. 3rd crossmember (RH&LH)
9. Front seat outer rear bracket (RH&LH)
10. Front seat inner rear bracket (RH&LH)
11. 2nd crossmember (RH&LH)
12. Front seat outer front bracket (RH&LH)
13. Front seat inner front bracket (RH&LH)
14. Fender bracket (RH&LH)
15. Strut housing assembly RH
16. Cowl top side upper (RH&LH)
17. Front strut housing (RH&LH)
18. Upper torque rod reinforcement
19. Closing plate assembly RH
20. Engine mount reinforcement
21. Strut tower front reinforcement RH
22. Front hoodledge lower RH
23. Frame bracket outer (RH&LH)
24. Front bumper support bracket (RH&LH)
25. Closing plate (RH&LH)
26. Front suspension rear bracket (RH&LH)
27. Front side member outrigger (RH&LH)
28. Front side member assembly (RH&LH)
29. Front side member (RH&LH)
30. Frame bracket (RH&LH)
31. Closing plate assembly LH
32. Hoodledge connector (RH&LH)
33. Radiator core side support (RH&LH)
34. Radiator core support upper (RH&LH)
35. Hoodledge upper (RH&LH)
36. Hoodledge reinforcement assembly (RH&LH)
37. Dash side (RH&LH)
38. Dash side assembly (RH& LH)
39. Front floor reinforcement (RH&LH)
40. Front floor front (RH&LH)
41. Front floor center
42. Rear seat crossmember
43. Rear center crossmember
44. Rear seat upper crossmember
45. Rear side member (RH&LH)
46. Sill inner extension (RH&LH)
47. Rear side member extension (RH&LH)
48. Rear side member assembly (RH & LH)
49. Rear floor front
50. Rear floor front assembly
51. Rear floor side (RH&LH)
52. Rear floor rear

BODY COMPONENT PARTS

Hatchback

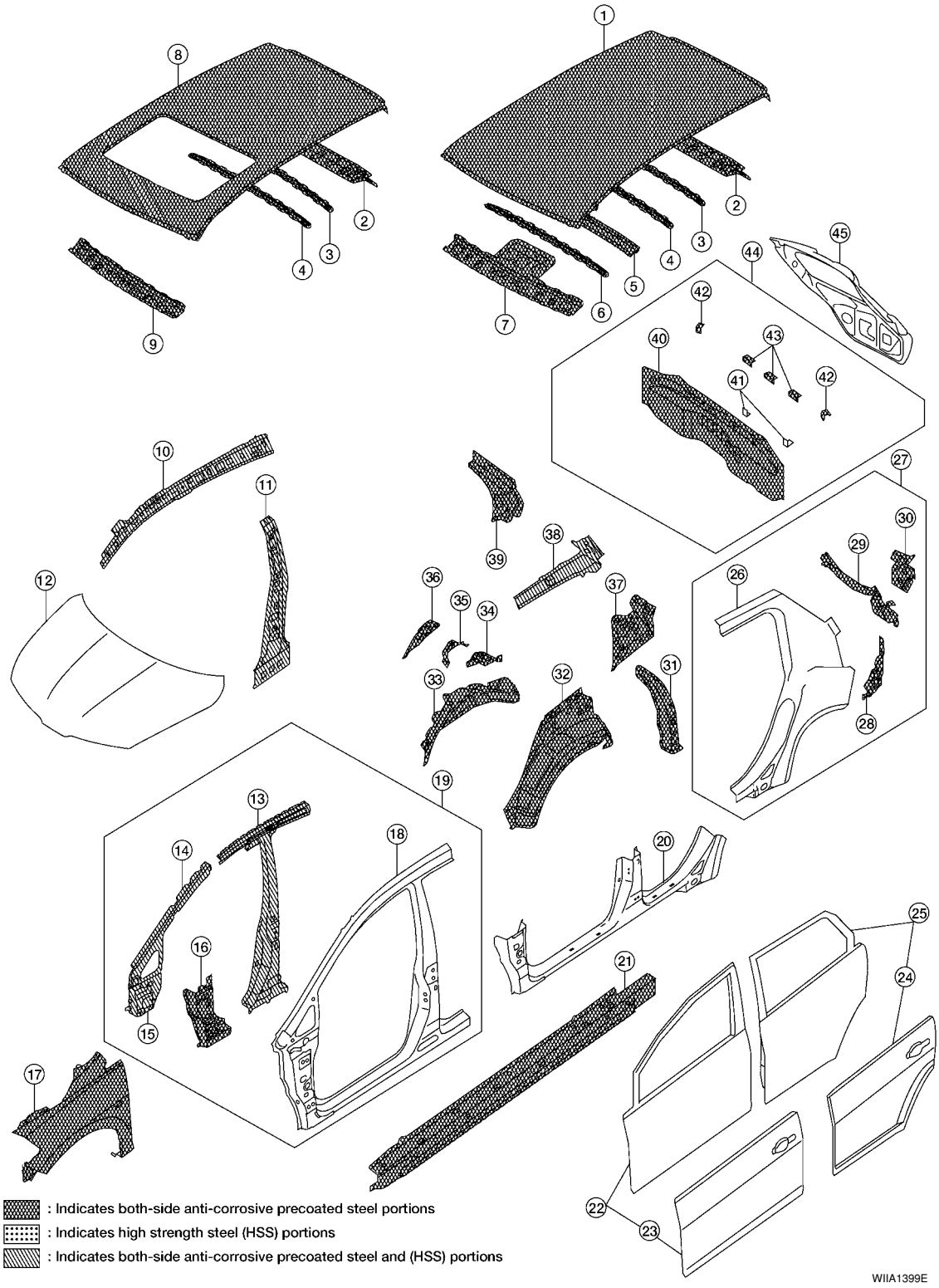

1. Roof panel assembly
2. Rear roof rail assembly
3. 4th roof rail assembly
4. 3rd roof rail assembly
5. 2nd roof rail assembly

6. 1st roof rail assembly
7. Front roof rail assembly
8. Sun roof assembly
9. Front roof rail assembly (if equipped with sunroof)
10. Roof side rail reinforcement (RH & LH)
11. Inner center pillar (RH & LH)
12. Hood assembly
13. Center pillar reinforcement (RH & LH)
14. Front pillar inner (RH & LH)
15. Front pillar upper reinforcement (RH & LH)
16. Front pillar lower reinforcement (RH & LH)
17. Fender (RH & LH)
18. Side body (RH & LH)
19. Side body assembly (RH & LH)
20. Outer sill (RH & LH)
21. Outer sill reinforcement (RH & LH)
22. Front door assembly (RH & LH)
23. Outer front door panel (RH & LH)
24. Outer rear door panel (RH & LH)
25. Rear door assembly (RH & LH)
26. Rear fender (RH & LH)
27. Rear fender assembly (RH & LH)
28. Rear fender corner (RH & LH)
29. Rear fender extension (RH & LH)
30. Rear combination lamp base (RH & LH)
31. Rear pillar inner reinforcement (RH & LH)
32. Rear wheel housing outer (RH & LH)
33. Rear wheel housing inner (RH & LH)
34. Rear spring base assembly (RH & LH)
35. Rear seatback hinge bracket (RH & LH)
36. Rear seatback catch bracket (RH & LH)
37. Rear pillar inner (RH & LH)
38. Rear roof rail reinforcement (RH & LH)
39. Rear roof rail brace (RH & LH)
40. Rear panel
41. Rear bumper fascia lower bracket
42. Rear bumper fascia upper bracket
43. Rear bumper fascia center bracket
44. Rear panel assembly
45. Back door assembly

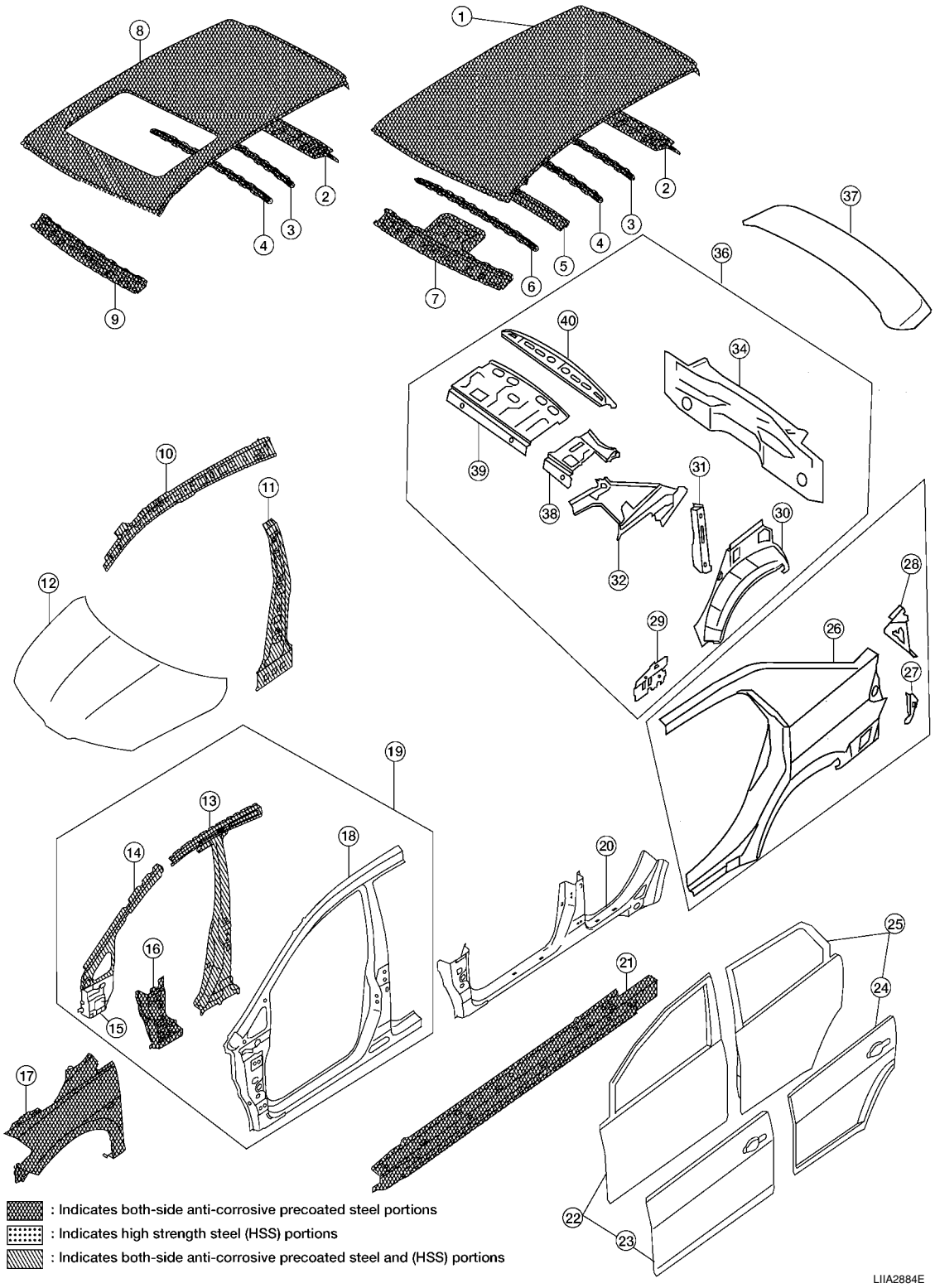

1. Roof panel assembly
2. Rear roof rail assembly
3. 4th roof rail assembly
4. 3rd roof rail assembly
5. 2nd roof rail assembly
6. 1st roof rail assembly

7. Front roof rail assembly
8. Sun roof assembly
9. Front roof rail assembly (if equipped with sunroof)
10. Roof side rail reinforcement (RH & LH)
11. Inner center pillar (RH & LH)
12. Hood assembly
13. Center pillar reinforcement (RH & LH)
14. Front pillar inner (RH & LH)
15. Front pillar upper reinforcement (RH & LH)
16. Front pillar lower reinforcement (RH & LH)
17. Fender (RH & LH)
18. Side body (RH & LH)
19. Side body assembly (RH & LH)
20. Outer sill (RH & LH)
21. Outer sill reinforcement (RH & LH)
22. Front door assembly (RH & LH)
23. Outer front door panel (RH & LH)
24. Outer rear door panel (RH & LH)
25. Rear door assembly (RH & LH)
26. Rear fender (RH & LH)
27. Rear fender corner (RH & LH)
28. Rear combination lamp base (RH & LH)
29. Rear wheel housing front extension (RH & LH)
30. Rear wheel housing outer (RH & LH)
31. Rear pillar inner reinforcement (RH & LH)
32. Rear body side inner (RH & LH)
33. Rear wheel housing inner (RH & LH)
34. Rear panel assembly
35. Rear bumper fascia upper bracket
36. Rear bumper fascia center bracket
37. Trunk lid assembly
38. Parcel shelf side (RH & LH)
39. Parcel shelf assembly
40. Rear waist panel
41. Rear bumper fascia lower bracket

Corrosion Protection

INFOID:0000000001704120

DESCRIPTION

To provide improved corrosion prevention, the following anti-corrosive measures have been implemented in NISSAN production plants. When repairing or replacing body panels, it is necessary to use the same anti-corrosive measures.

ANTI-CORROSIVE PRECOATED STEEL (GALVANNEALED STEEL)

To improve repairability and corrosion resistance, a new type of anti-corrosive precoated steel sheet has been adopted replacing conventional zinc-coated steel sheet.
Galvannealed steel is electroplated and heated to form Zinc-iron alloy, which provides excellent and long term corrosion resistance with cationic electrodeposition primer.

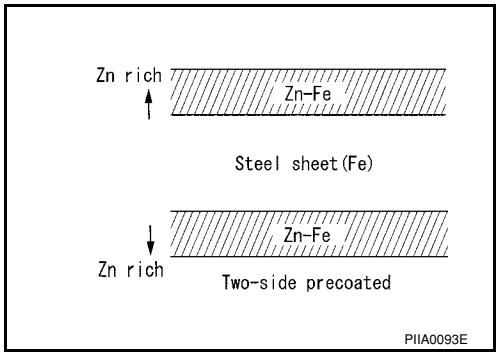

Nissan Genuine Service Parts are fabricated from galvannealed steel. Therefore, it is recommended that GENUINE NISSAN PARTS or equivalent be used for panel replacement to maintain the anti-corrosive performance built into the vehicle at the factory.

PHOSPHATE COATING TREATMENT AND CATIONIC ELECTRODEPOSITION PRIMER

A phosphate coating treatment and a cationic electrode position primer, which provide excellent corrosion protection, are employed on all body components.

CAUTION:

Confine paint removal during welding operations to an absolute minimum.

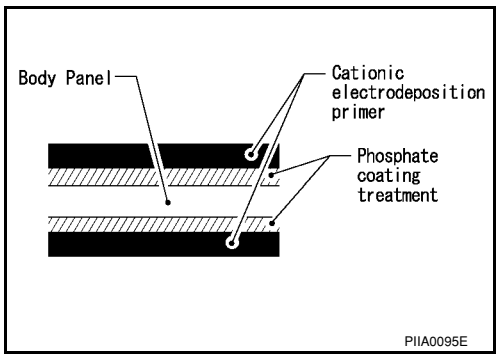

Nissan Genuine Service Parts are also treated in the same manner. Therefore, it is recommended that GENUINE NISSAN PARTS or equivalent be used for panel replacement to maintain anti-corrosive performance built into the vehicle at the factory.

ANTI-CORROSIVE WAX

To improve corrosion resistance, anti-corrosive wax is applied inside the body sill and inside other closed sections. Accordingly, when replacing these parts, be sure to apply anti-corrosive wax to the appropriate areas of the new parts. Select an excellent anti-corrosive wax which will penetrate after application and has a long shelf life.

Hatchback

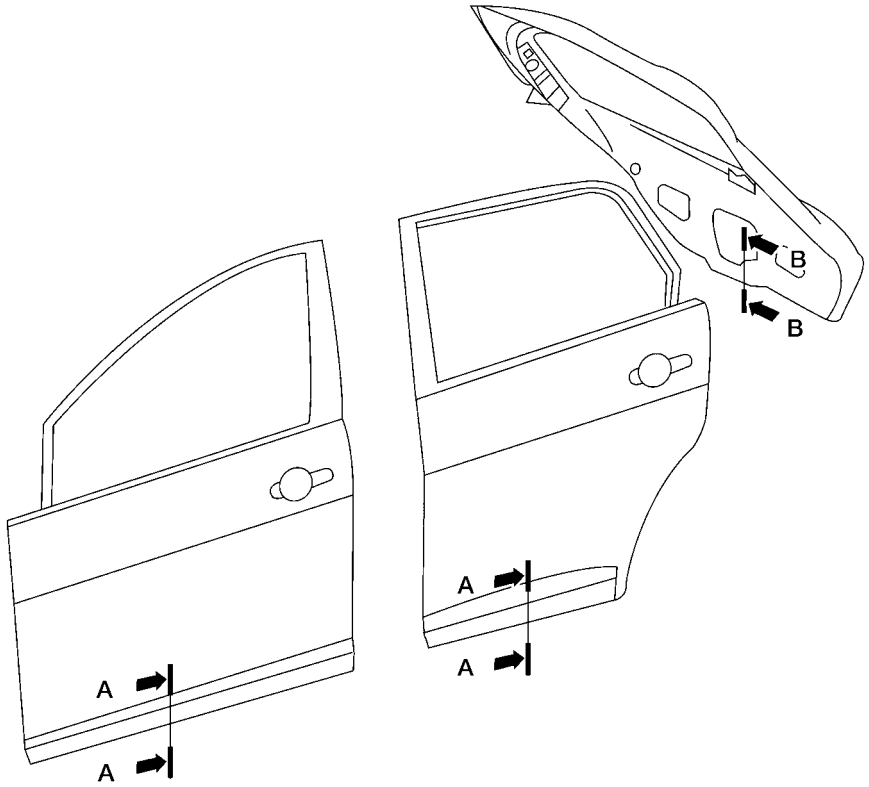

: indicates outside body sealant

: Indicates anti-corrosive wax coated portions

Section A-A	Section B-B
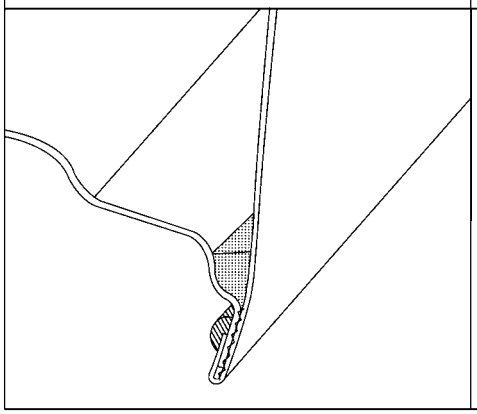	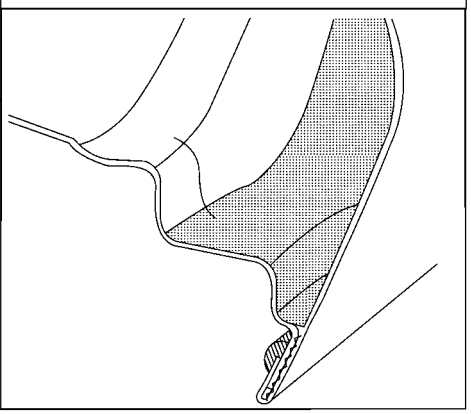

LIIA2600E

Sedan

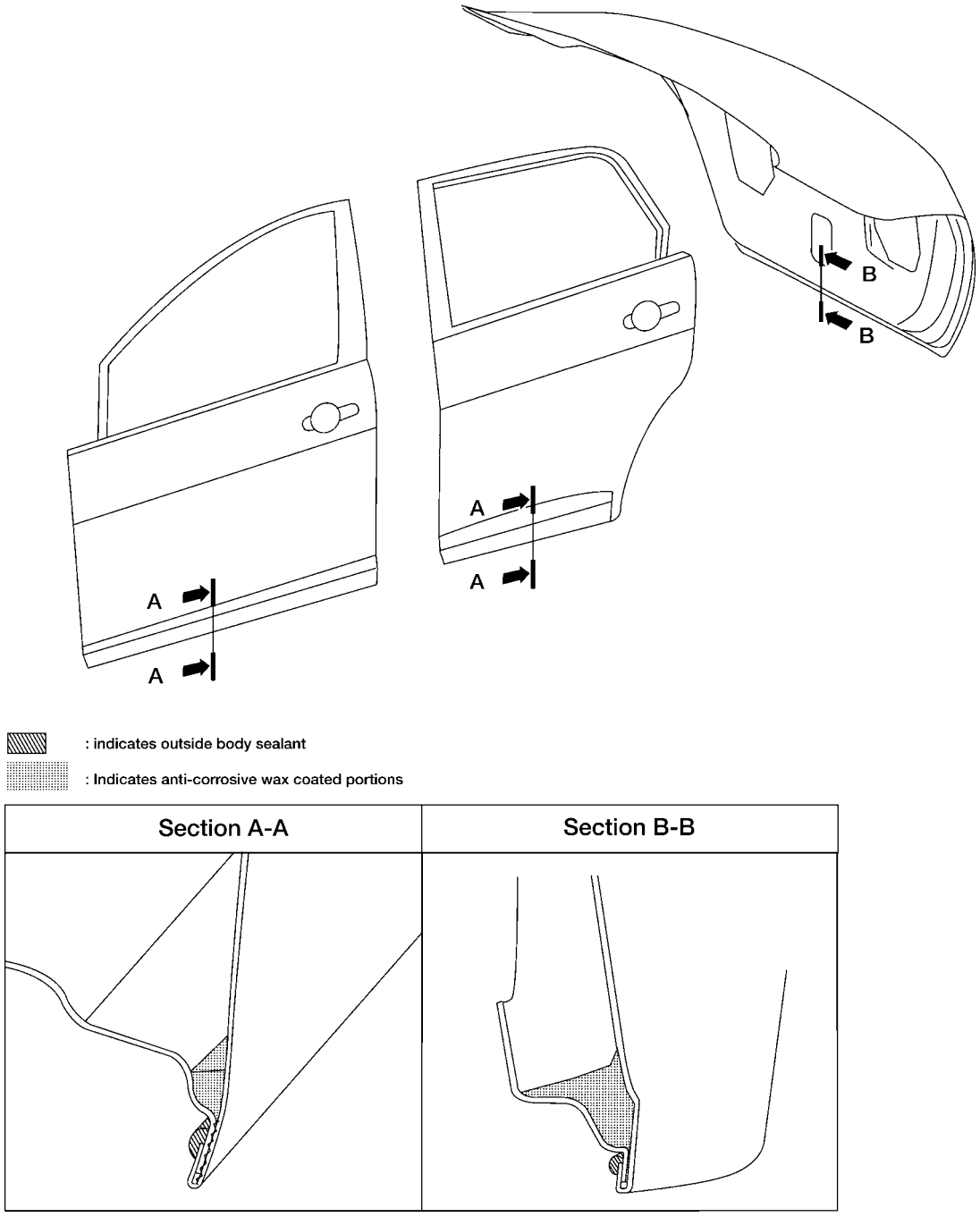

UNDERCOATING

The underside of the floor and wheelhouse are undercoated to prevent rust, vibration, noise and stone chipping. Therefore, when such a panel is replaced or repaired, apply undercoating to that part. Use an undercoating which is rust preventive, soundproof, vibration-proof, shock-resistant, adhesive, and durable.

Precautions in undercoating

1. Do not apply undercoating to any place unless specified (such as the areas above the muffler and three way catalyst which are subjected to heat).
2. Do not undercoat the exhaust pipe or other parts which become hot.
3. Do not undercoat rotating parts.

Hatchback

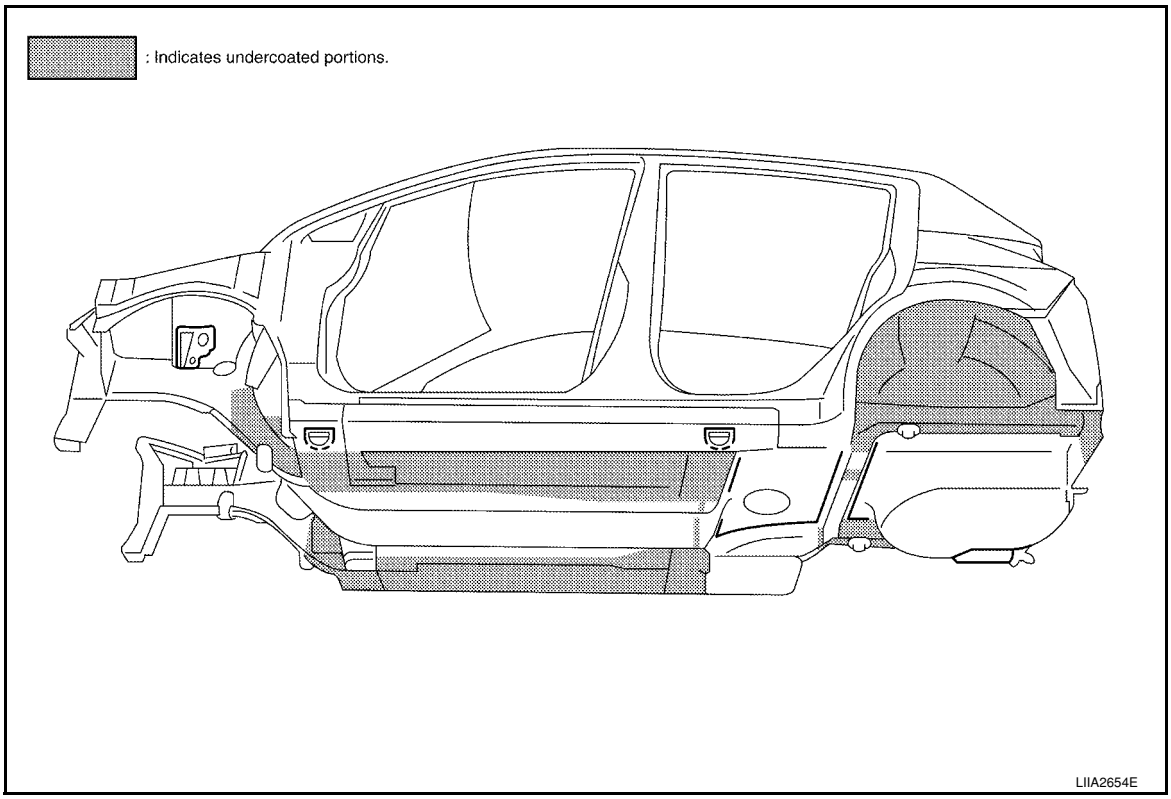

Sedan

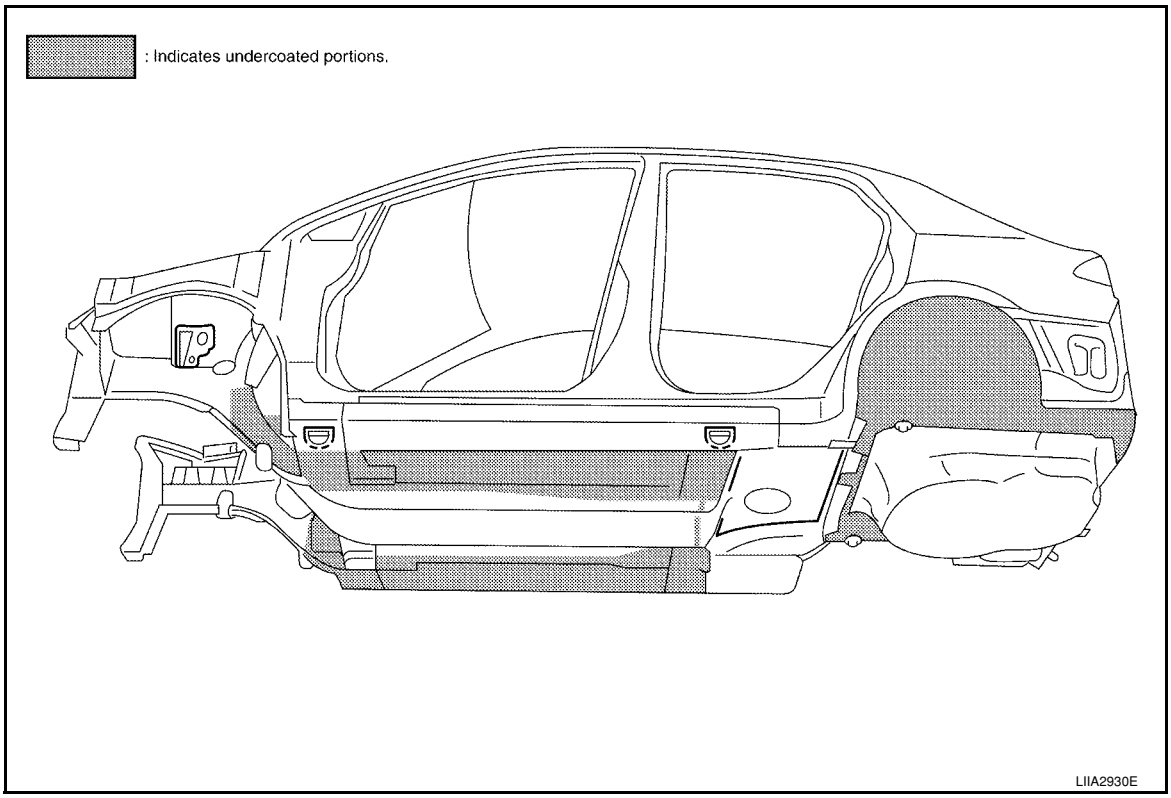

Body Sealing

INFOID:0000000001704121

DESCRIPTION

The following figure shows the areas which are sealed at the factory. Sealant which has been applied to these areas should be smooth and free from cuts or gaps. Care should be taken not to apply an excess amount of sealant and not to allow other unaffected parts to come into contact with the sealant.

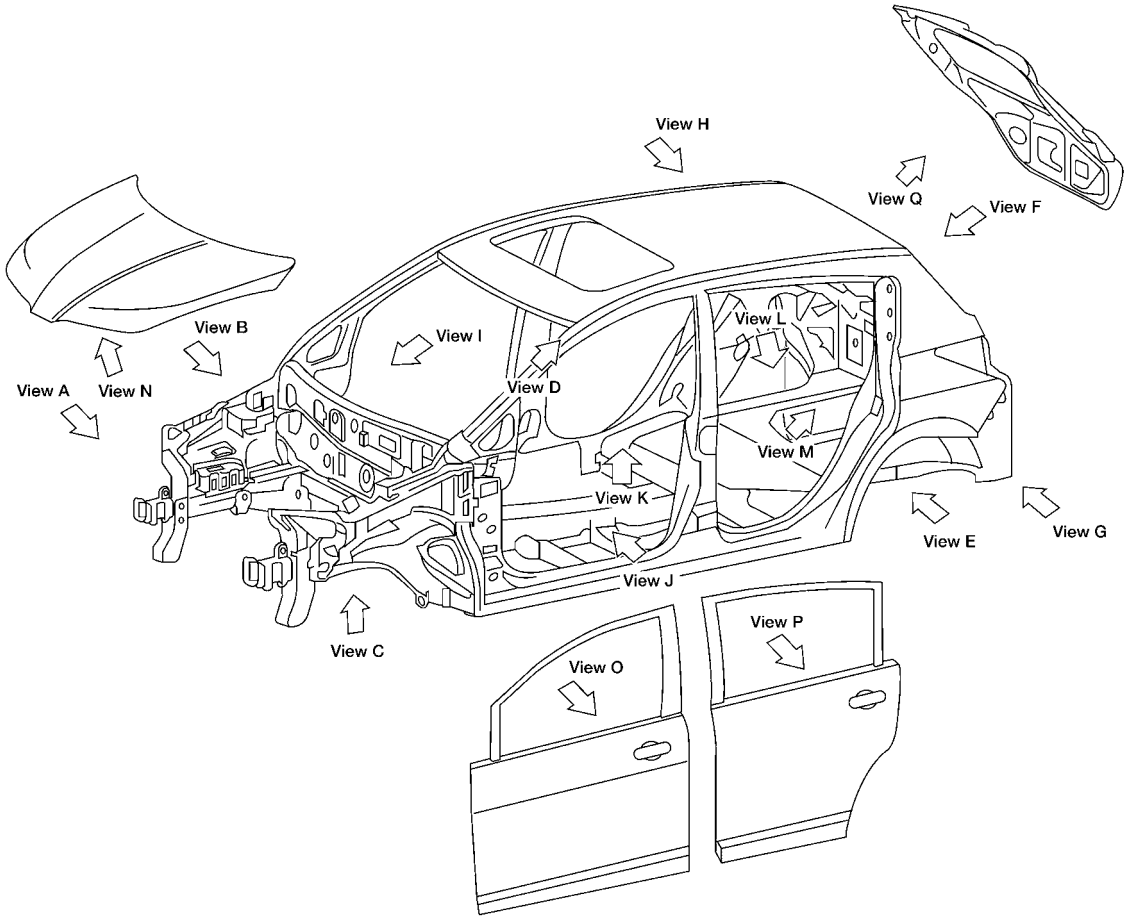
View H
View Q
View F
View B
View I
View L
View A
View N
View D
View M
View K
View E
View G
View J
View C
View P
View O

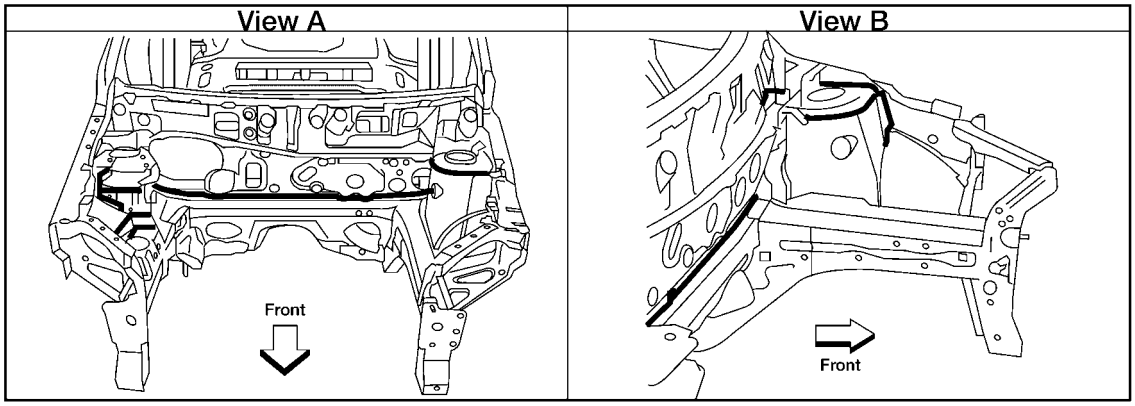
View A
View B
Front
Front

LIIA2545E

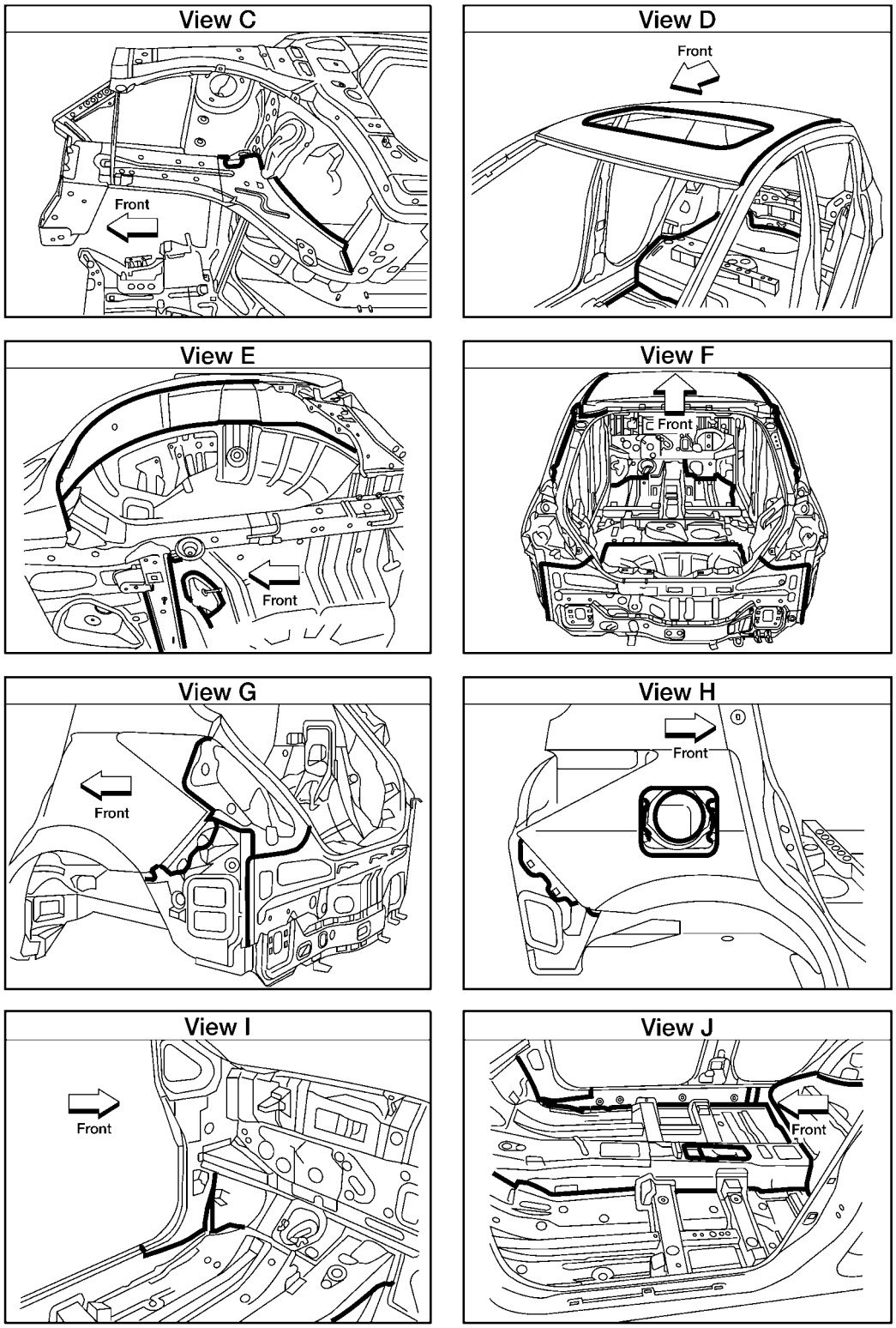
View C
Front
View D
Front
View E
Front
View F
Front
View G
Front
View H
Front
View I
Front
View J
Front

LIIA2546E

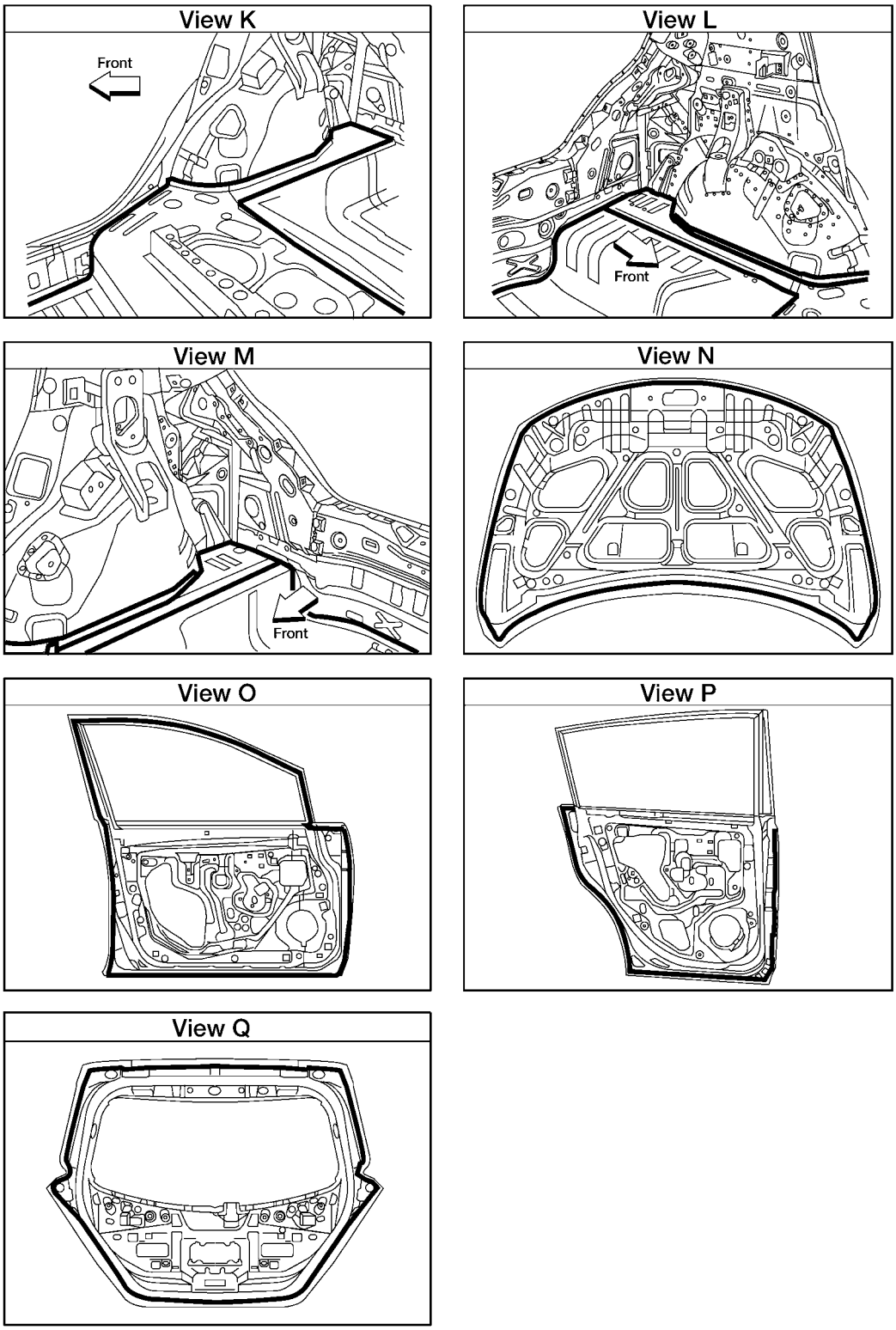
View K
Front
View L
Front
View M
Front
View N
View O
View P
View Q

LIIA2547E

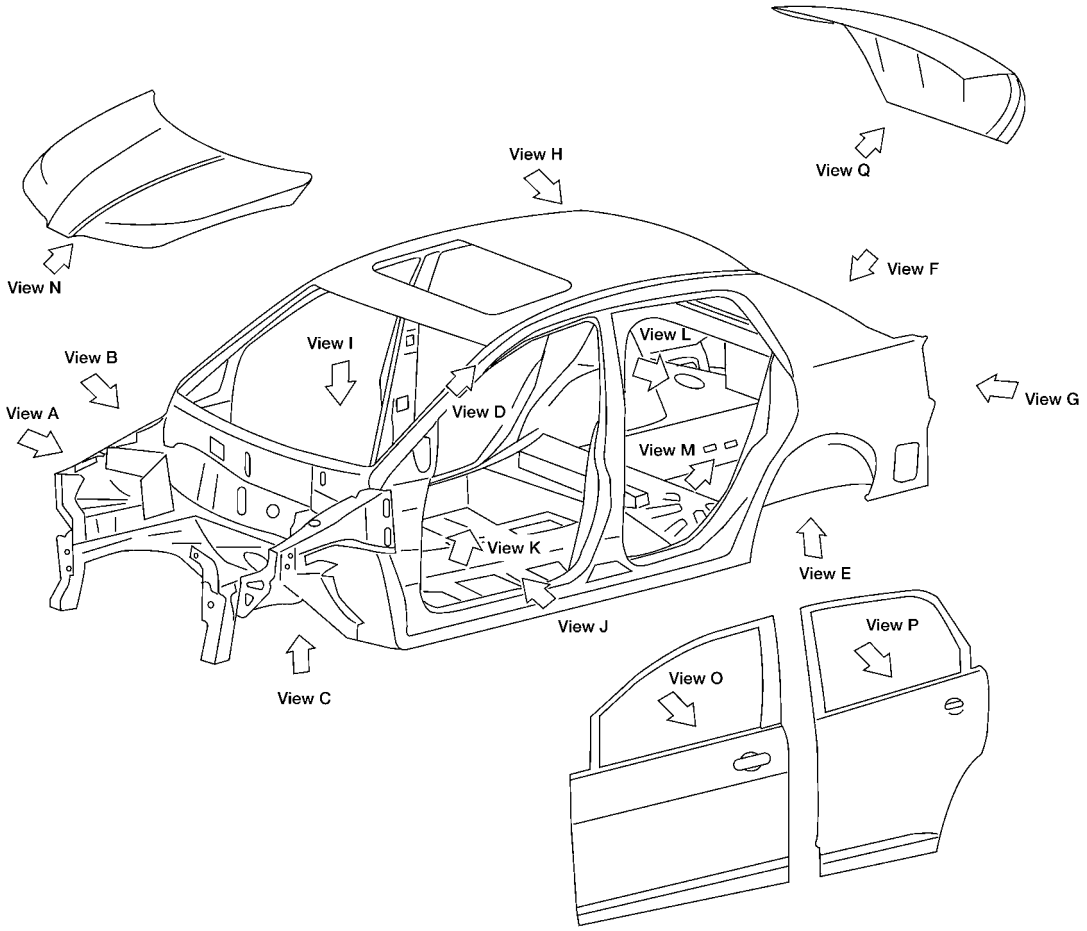
View H
View Q
View N
View F
View I
View L
View B
View A
View D
View G
View M
View K
View E
View J
View P
View O
View C

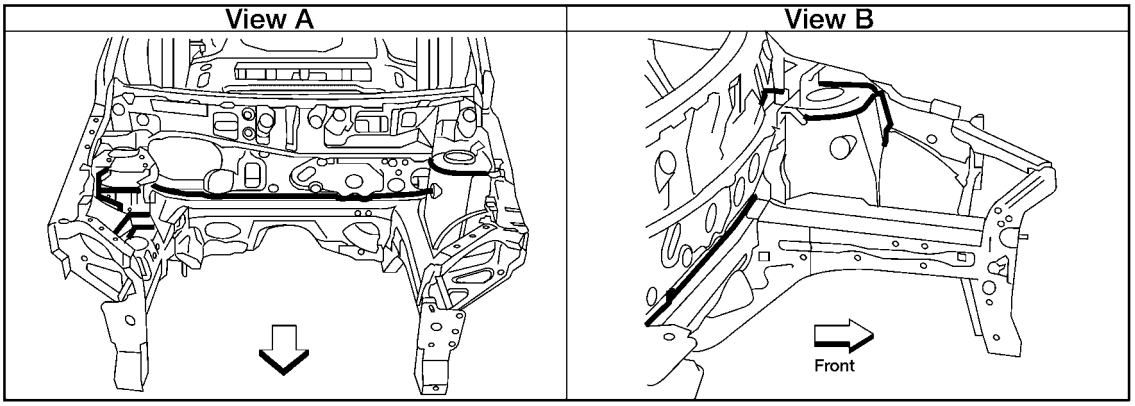
View A
View B
Front

LIIA2876E

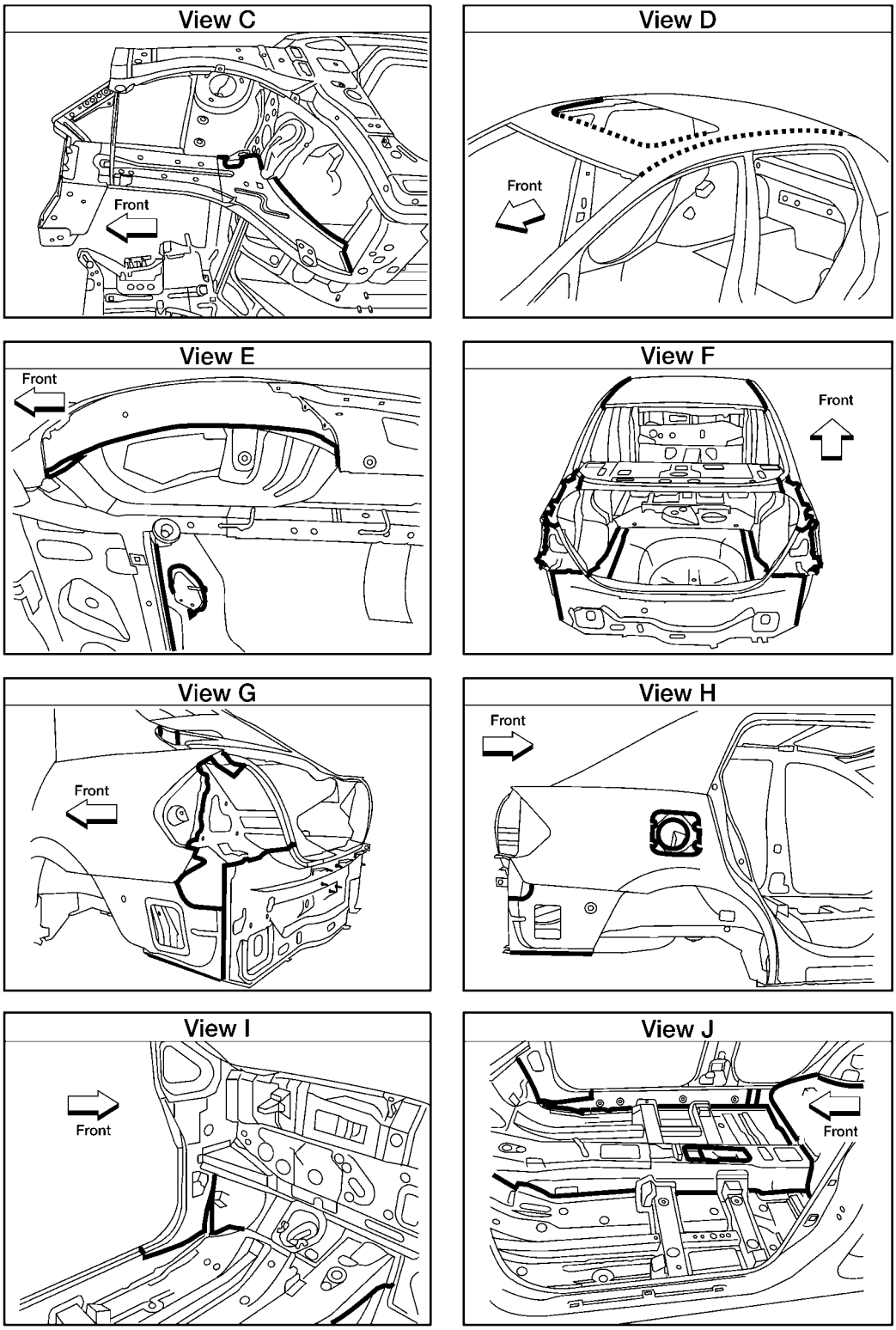
View C
Front
View D
Front
View E
Front
View F
Front
View G
Front
View H
Front
View I
Front
View J
Front

LIIA2877E

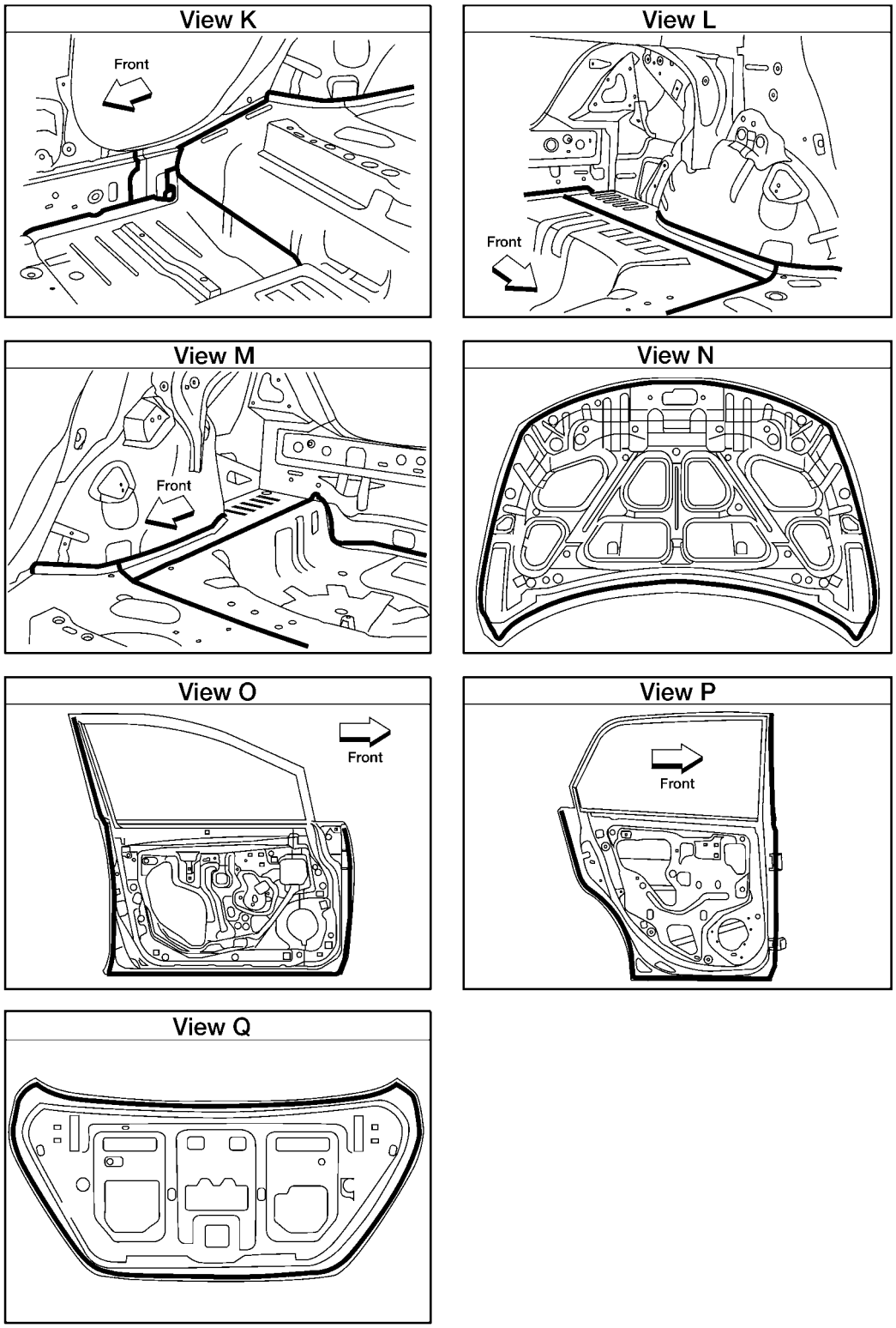

LIIA2878E

Body Construction

INFOID:0000000001704122

BODY CONSTRUCTION

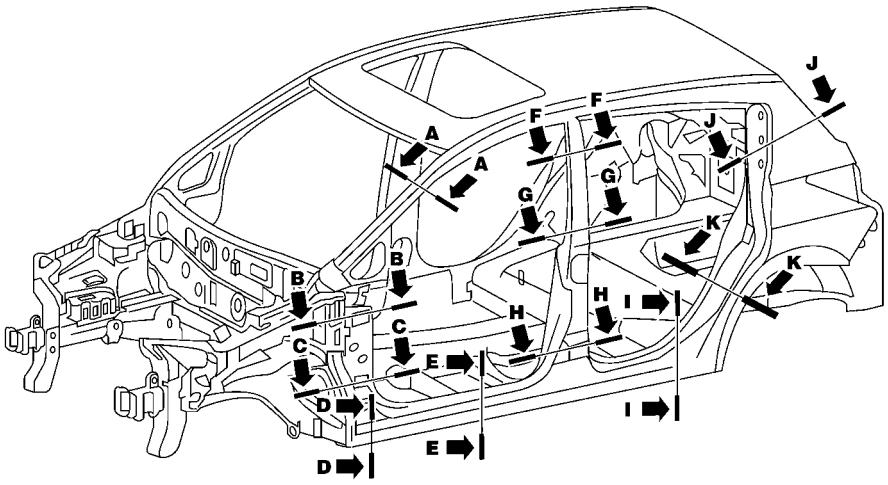
A
A
B
B
C
C
D
D
E
E
F
F
G
G
H
H
I
I
J
J
K
K

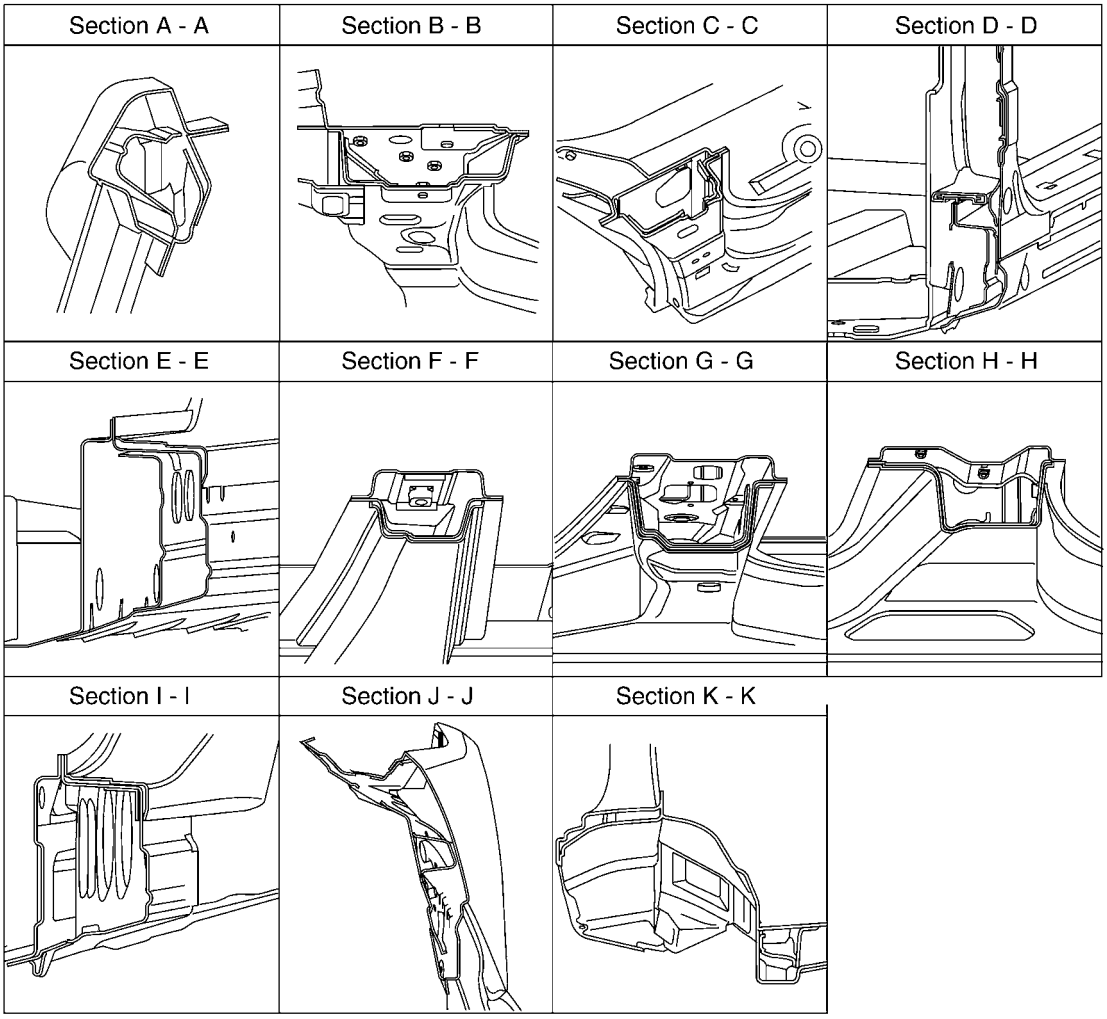
Section A - A
Section B - B
Section C - C
Section D - D
Section E - E
Section F - F
Section G - G
Section H - H
Section I - I
Section J - J
Section K - K

LIIA2548E

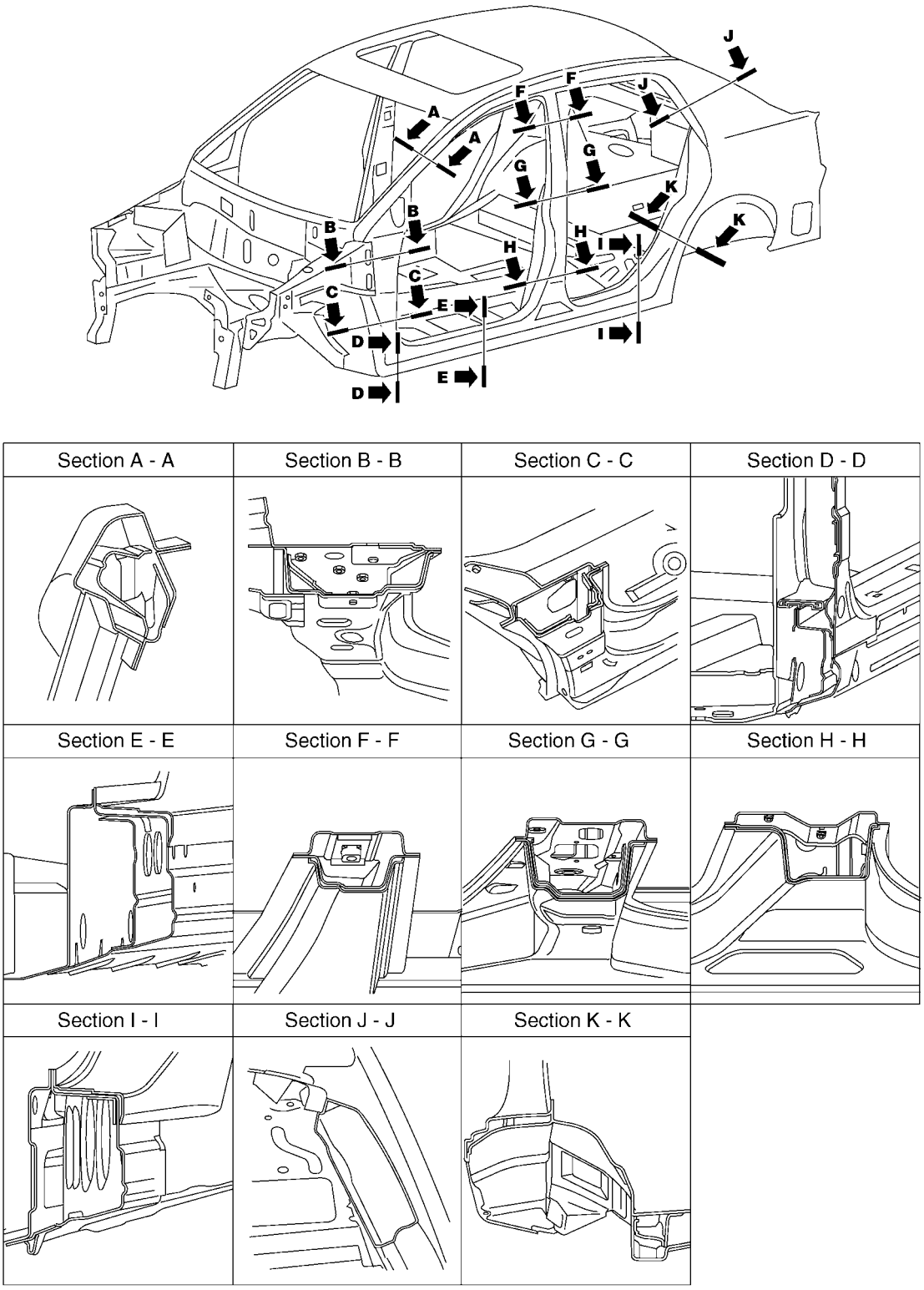

LIIA2881E

Body Alignment

INFOID:0000000001704123

BODY CENTER MARKS

A mark has been placed on each part of the body to indicate the vehicle center. When repairing parts damaged by an accident which might affect the vehicle frame (members, pillars, etc.), more accurate and effective repair will be possible by using these marks together with body alignment specifications.

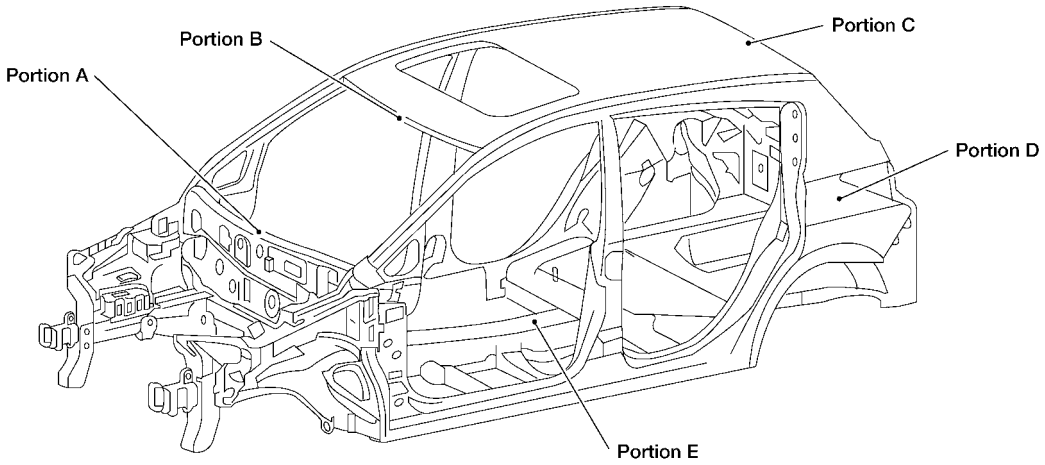
Portion A
Portion B
Portion C
Portion D
Portion E

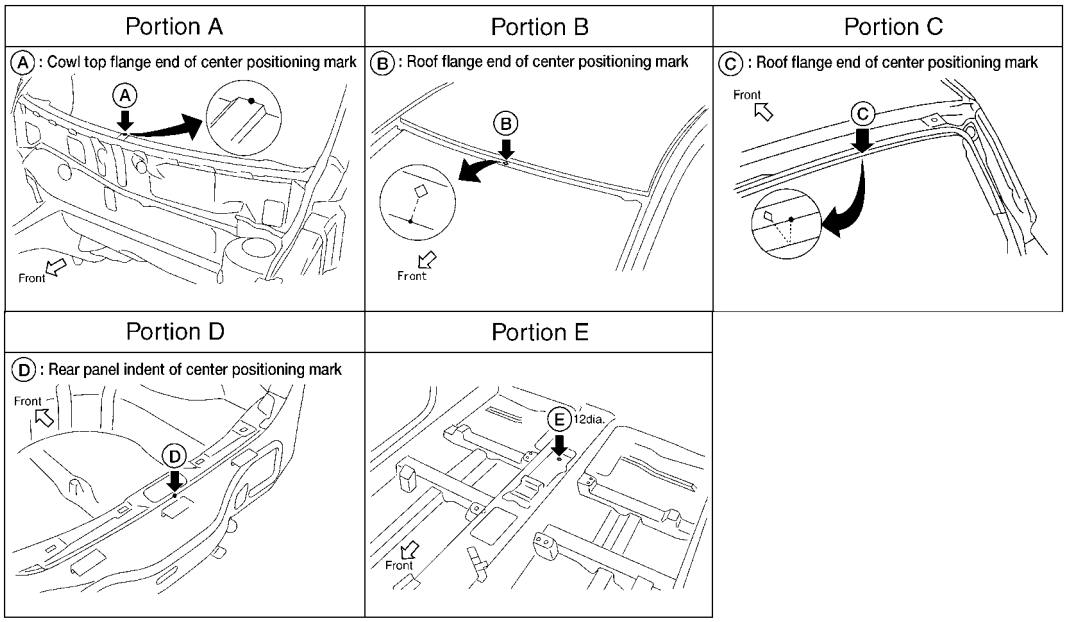
Portion A
A : Cowl top flange end of center positioning mark
Front
Portion B
B : Roof flange end of center positioning mark
Front
Portion C
C : Roof flange end of center positioning mark
Front
Portion D
D : Rear panel indent of center positioning mark
Front
Portion E
E 12dia.
Front

LIIA2627E

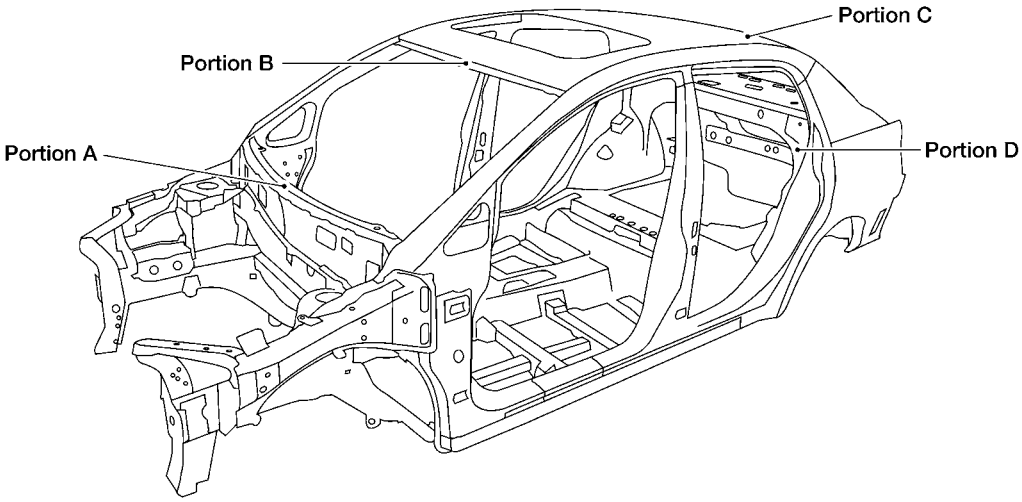

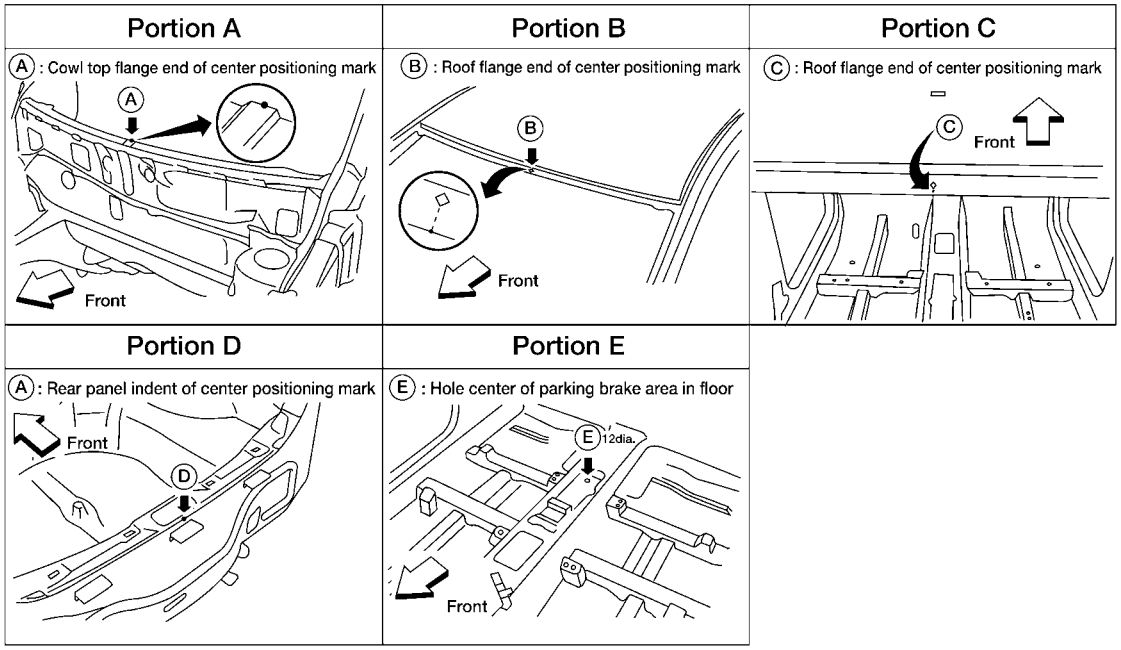

LIIA2879E

PANEL PARTS MATCHING MARKS

A mark has been placed on each body panel to indicate the parts matching positions. When repairing parts damaged by an accident which might affect the vehicle structure (members, pillars, etc.), more accurate and effective repair will be possible by using these marks together with body alignment specifications.

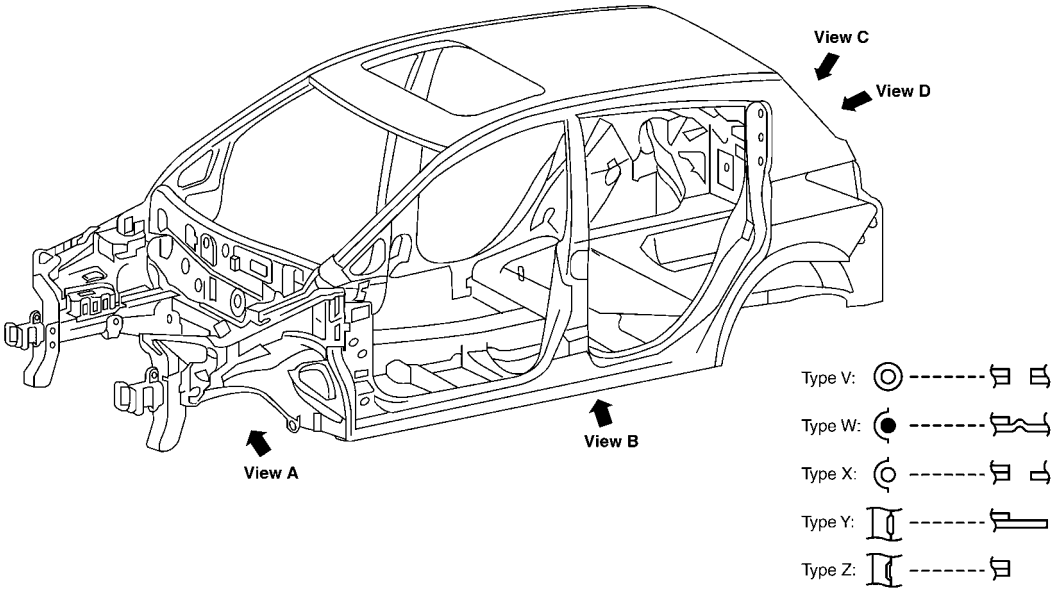
View C
View D
View A
View B
Type V:
Type W:
Type X:
Type Y:
Type Z:

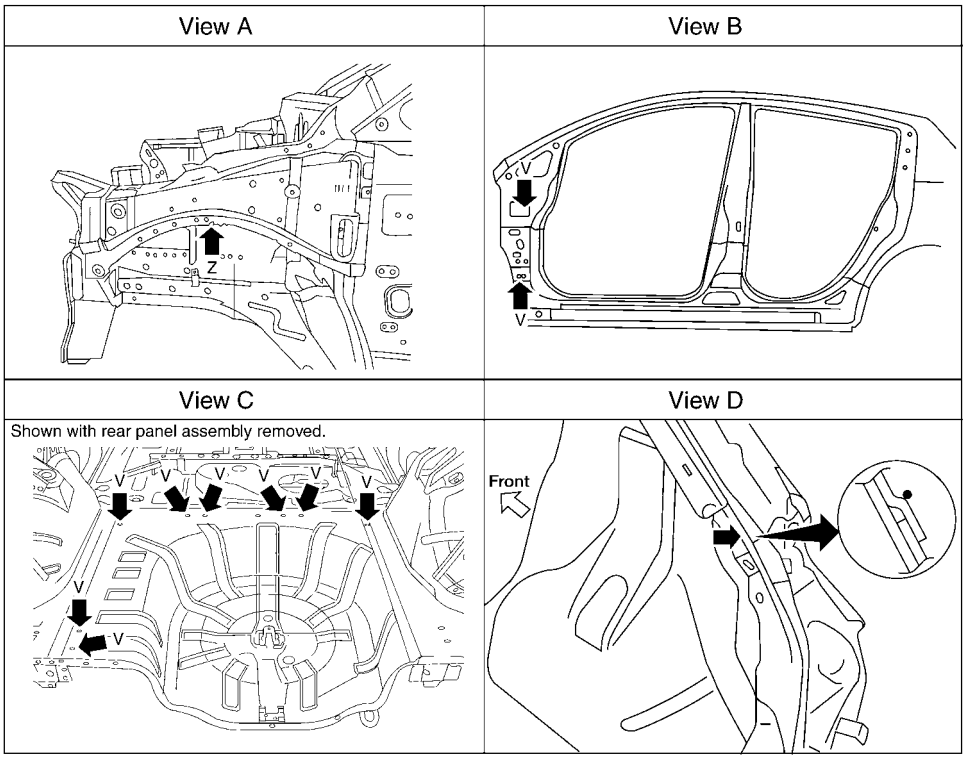
View A
View B
View C
View D
Z
V
Shown with rear panel assembly removed.
Front

LIIA2628E

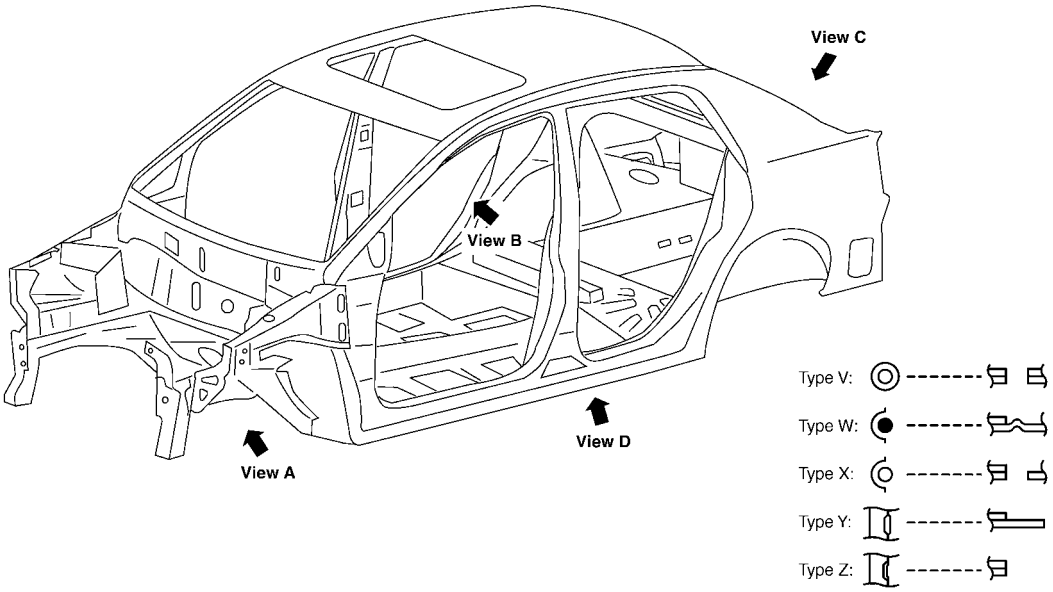

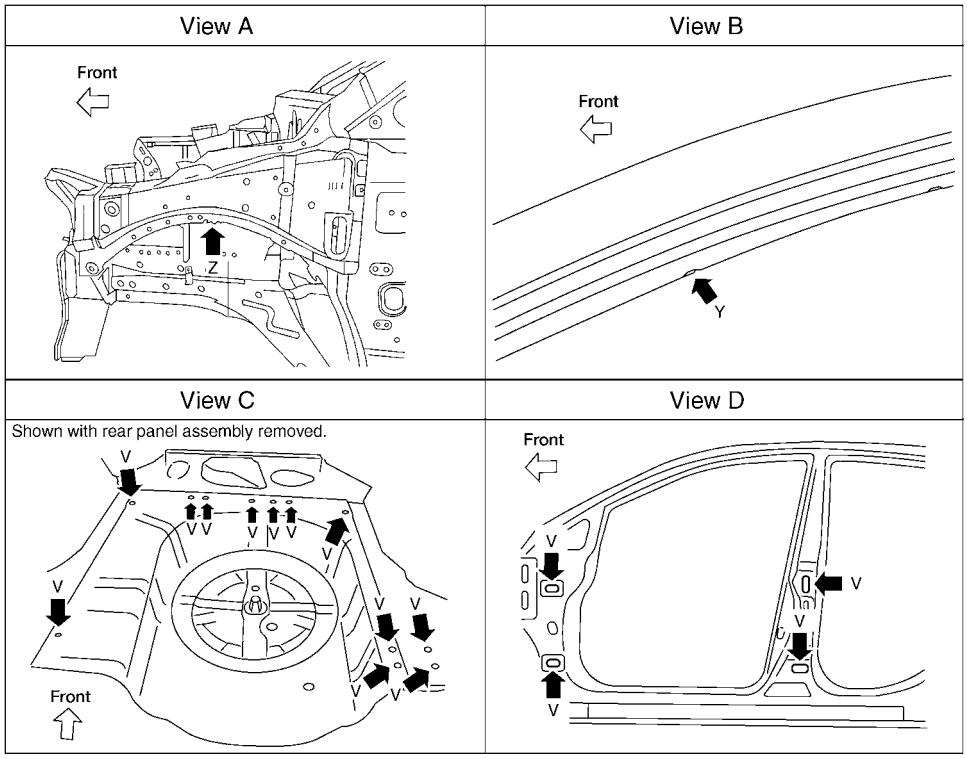

LIIA2882E

DESCRIPTION

- All dimensions indicated in the figures are actual.
- When using a tracking gauge, adjust both pointers to equal length. Then check the pointers and gauge itself to make sure there is no free play.
- When a measuring tape is used, check to be sure there is no elongation, twisting or bending.
- Measurements should be taken at the center of the mounting holes.
- An asterisk (*) following the value at the measuring point indicates that the measuring point on the other side is symmetrically the same value.
- The coordinates of the measurement points are the distances measured from the standard line of ″X″, ″Y″ and ″Z″.

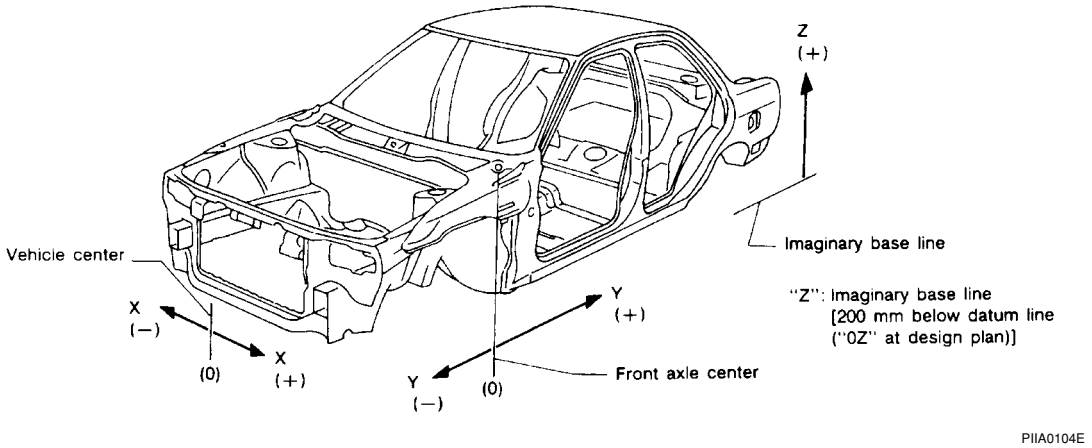

ENGINE COMPARTMENT

Measurement

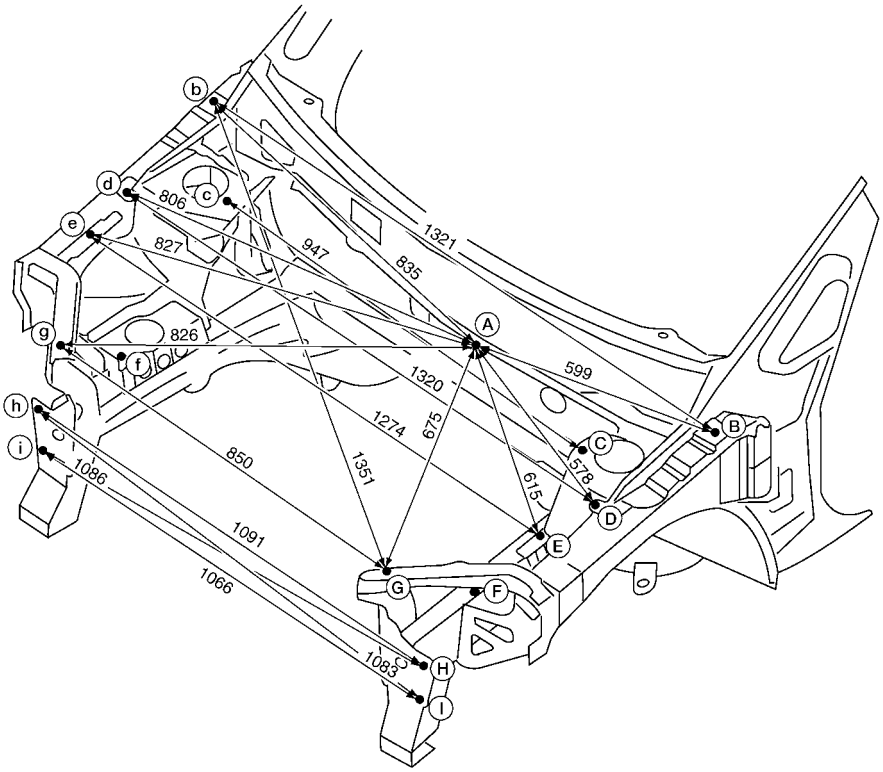

Point	Dimension	Point	Dimension	Point	Dimension
Ⓐ~Ⓕ	555	Ⓒ~ⓕ	1072	Ⓔ~ⓕ	1147
Ⓐ~ⓕ	745	Ⓒ~Ⓖ	502	ⓔ~Ⓕ	1143
Ⓑ~Ⓒ	266	Ⓒ~ⓖ	1108	ⓔ~ⓕ	264
Ⓑ~ⓒ	1236	ⓒ~Ⓖ	1096	Ⓔ~Ⓖ	317
ⓑ~ⓒ	1239	ⓒ~ⓖ	484	Ⓔ~ⓖ	1143
Ⓑ~Ⓓ	294	Ⓓ~Ⓔ	135	ⓔ~Ⓖ	1127
Ⓑ~ⓓ	1396	Ⓓ~ⓔ	1304	ⓔ~ⓖ	290
Ⓑ~Ⓔ	429	Ⓓ~Ⓕ	373	Ⓕ~ⓕ	966
Ⓑ~ⓔ	1408	Ⓓ~ⓕ	1187	Ⓕ~Ⓖ	319
Ⓑ~Ⓖ	728	ⓓ~ⓕ	343	Ⓕ~ⓖ	1002
Ⓑ~ⓖ	1361	ⓓ~Ⓕ	1179	ⓕ~Ⓖ	982
Ⓒ~Ⓓ	177	Ⓓ~Ⓖ	443	ⓕ~ⓖ	243
Ⓒ~ⓓ	1183	Ⓓ~ⓖ	1201		
Ⓒ~Ⓔ	266	ⓓ~Ⓖ	1186		
Ⓒ~ⓔ	1180	ⓓ~ⓖ	418		
Ⓒ~Ⓕ	380	Ⓔ~Ⓕ	313		

Unit : mm

LIIA2885E

Measurement Points

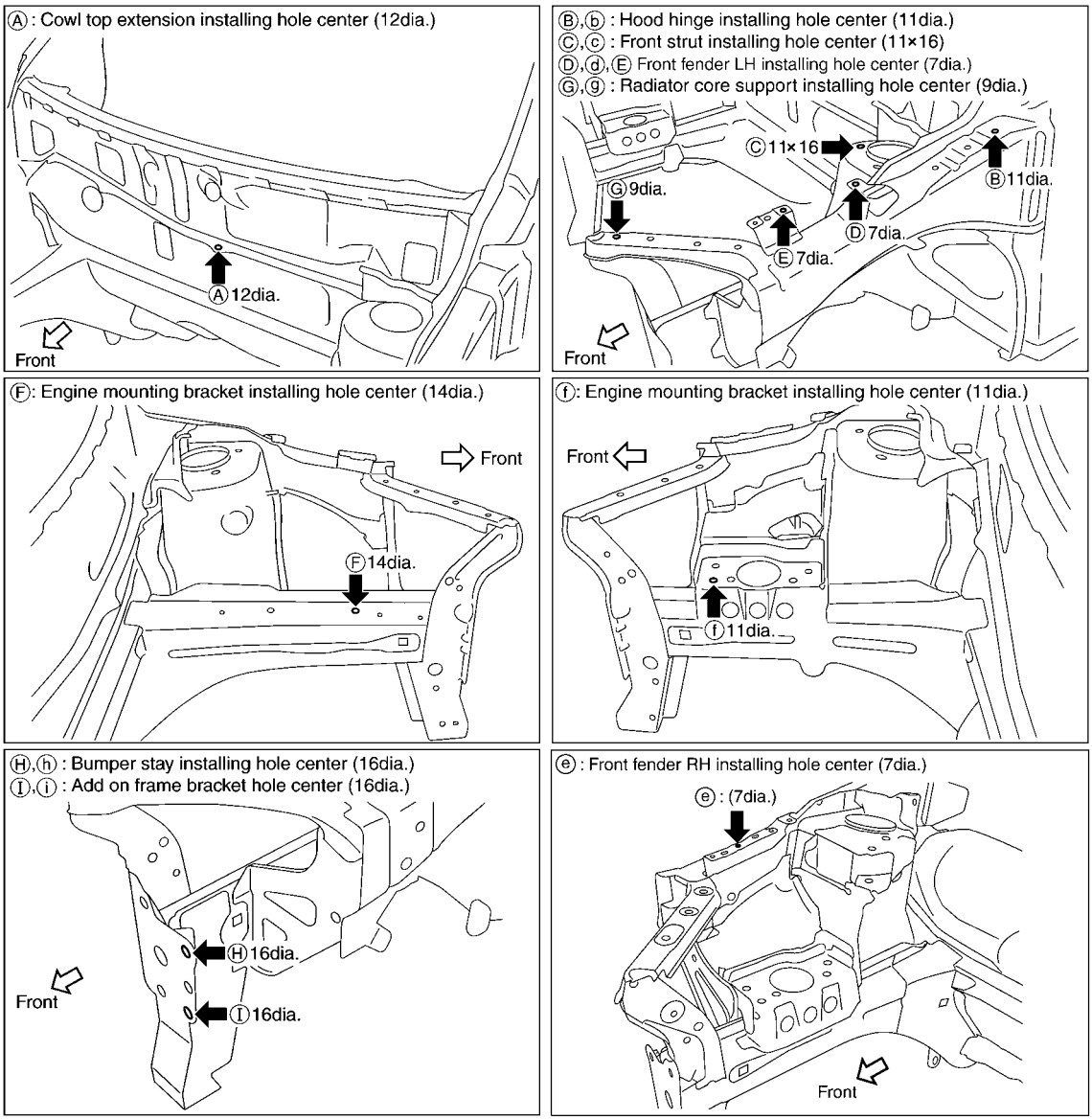

LIIA2611E

UNDERBODY

Measurement

Unit: mm

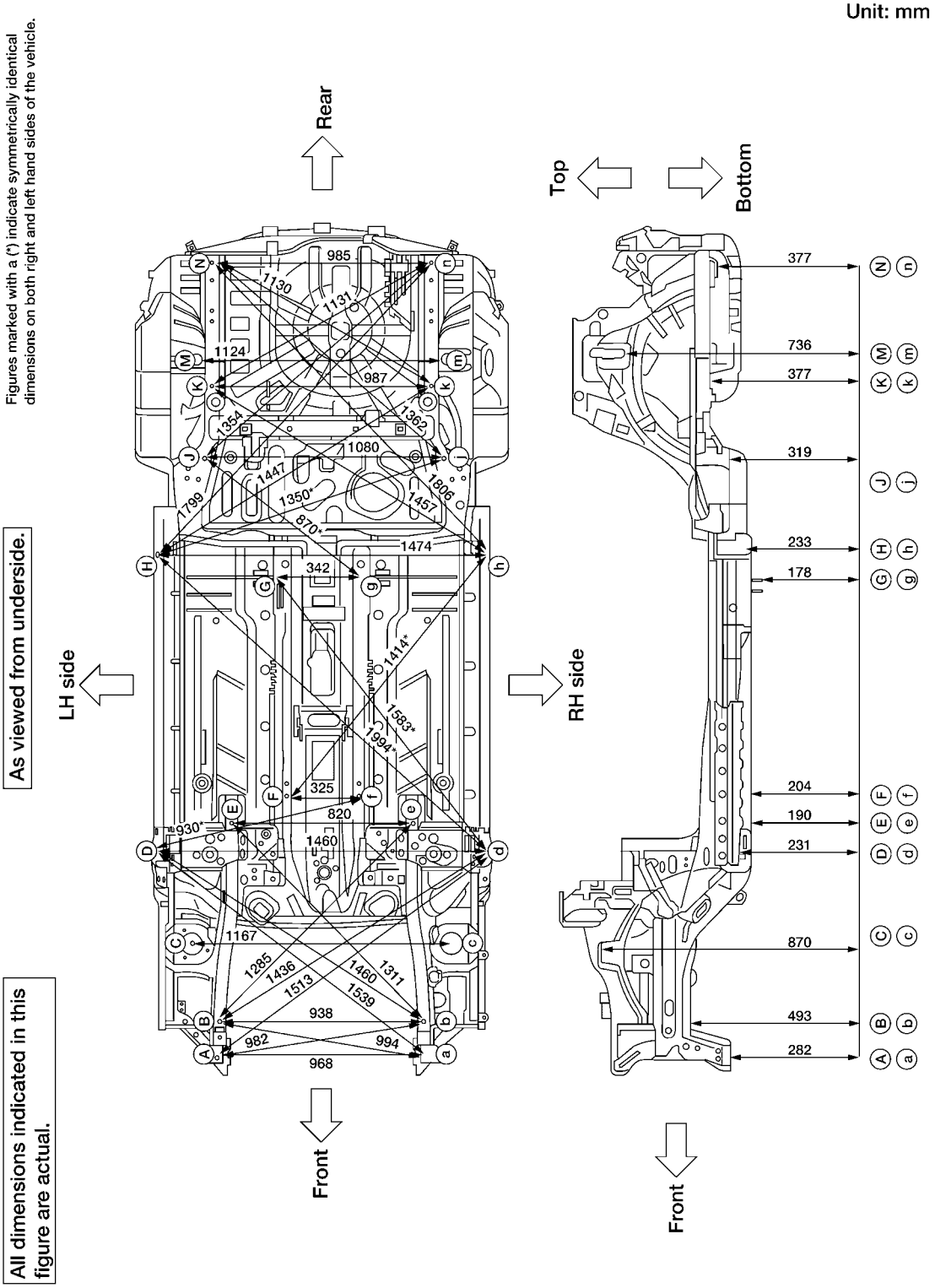

LIIA2601E

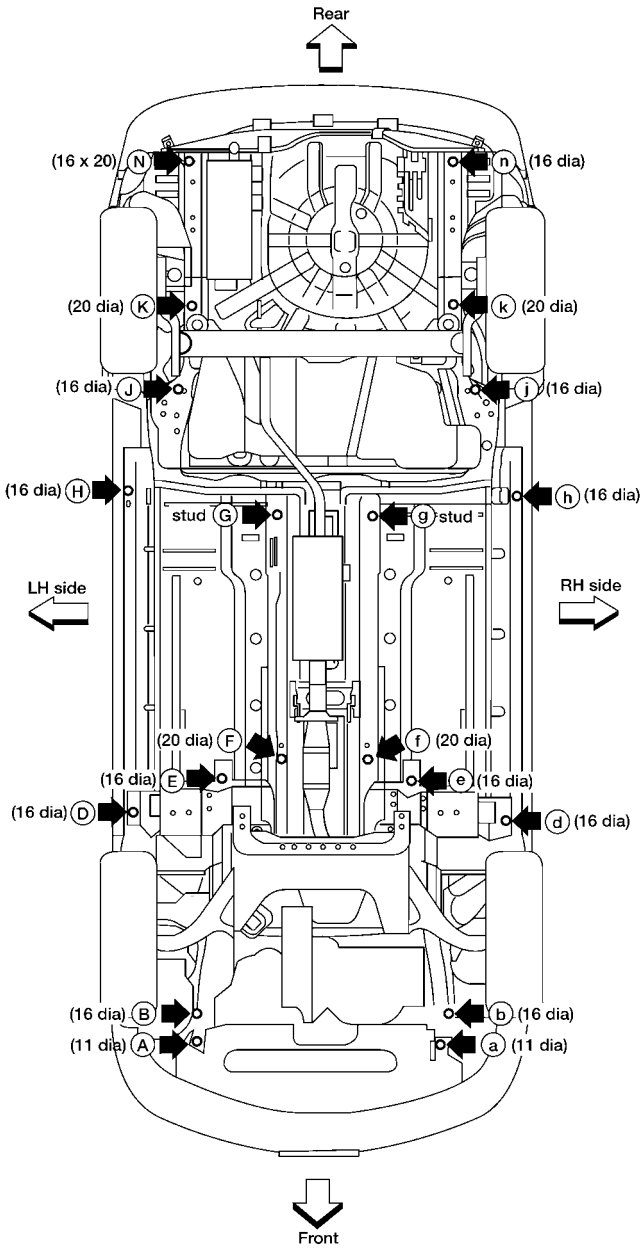

Coordinates:

A	a
X : -476	X : 492
Y : -502	Y : -525
Z : 282	Z : 282
B	b
X : -462	X : 475
Y : -346	Y : -372
Z : 493	Z : 493
D, d	k
X : ±730	X : 488
Y : 410	Y : 2518
Z : 231	Z : 377
E, e	n
X : ±410	X : 487
Y : 547	Y : 3070
Z : 190	Z : 377
F, f	
X : ±162	
Y : 670	
Z : 204	
G, g	
X : ±171	
Y : 1710	
Z : 178	
H, h	
X : ±737	
Y : 1760	
Z : 233	
J, j	
X : ±540	
Y : 2190	
Z : 319	
K	
X : -499	
Y : 2518	
Z : 377	
N	
X : -498	
Y : 3070	
Z : 377	

Strut tower centers

Coordinates:

C, c Front
X : ±584
Y : 7
Z : 870

M, m Rear
X : ±562
Y : 2639
Z : 736

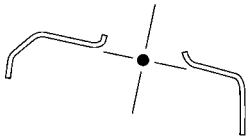

Unit: mm

LIIA2602E

PASSENGER COMPARTMENT HATCHBACK

Unit : mm

Figures marked with a (*) indicate symmetrically identical dimensions on both right and left side of the vehicle.

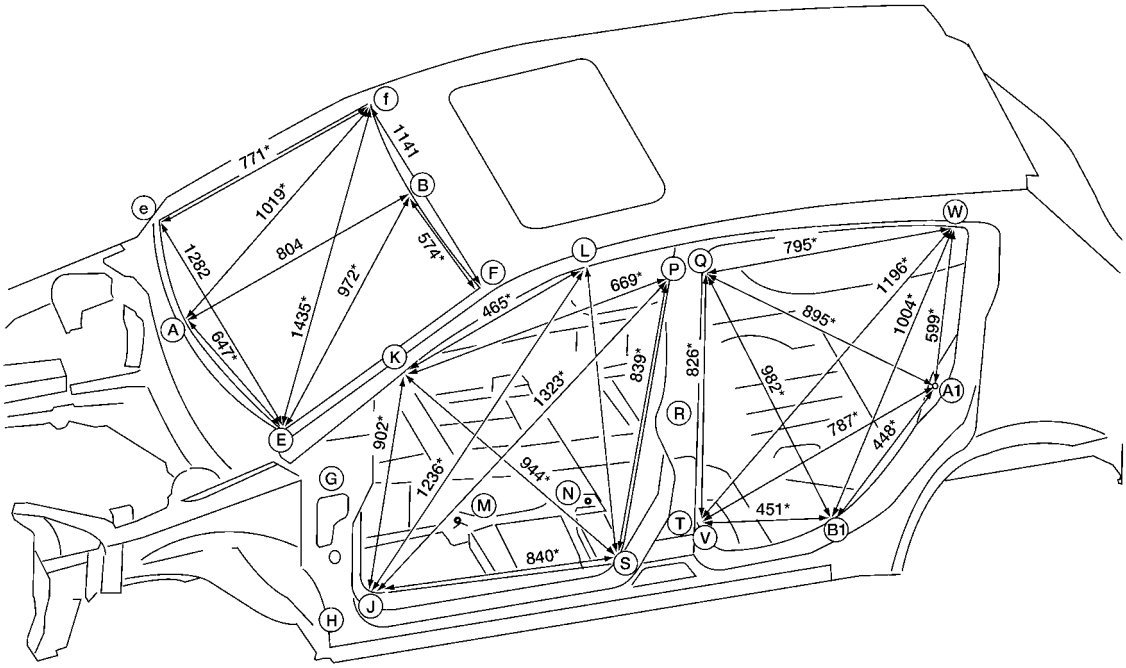

Point	Dimension	Point	Dimension	Point	Dimension
Ⓚ~ⓚ	1,238	Ⓠ~ⓐ1	1,580*	Ⓜ~ⓚ	1,114*
Ⓚ~ⓙ	1,586*	Ⓠ~ⓑ1	1,628*	Ⓜ~ⓟ	1,260*
Ⓚ~ⓟ	1,405*	Ⓠ~ⓦ	1,440*	Ⓜ~Ⓙ	728*
Ⓚ~ⓢ	1,613*	Ⓥ~ⓥ	1,380	Ⓜ~Ⓢ	714*
Ⓙ~ⓙ	1,373	Ⓥ~ⓐ1	1,588*	Ⓝ~Ⓠ	1,162*
Ⓙ~ⓟ	1,855*	Ⓥ~ⓑ1	1,448*	Ⓝ~Ⓦ	1,541*
Ⓙ~ⓢ	1,612*	Ⓥ~ⓦ	1,746*	Ⓝ~Ⓐ1	1,172*
Ⓟ~ⓟ	1,232	Ⓦ~ⓦ	1,172	Ⓝ~Ⓑ1	834*
Ⓟ~ⓢ	1,550*	Ⓦ~ⓐ1	1,405*	Ⓝ~Ⓥ	603*
Ⓢ~ⓢ	1,380*	Ⓦ~ⓑ1	1,618*	Ⓖ~Ⓡ	1,158*
Ⓠ~ⓠ	1,229*	Ⓐ1~ⓐ1	1,379	Ⓖ~Ⓣ	1,170*
Ⓠ~Ⓥ	1,542*	Ⓐ1~ⓑ1	1,447*	Ⓗ~Ⓡ	1,205*
				Ⓗ~Ⓣ	1,104*

LIIA2603E

Measurement Points

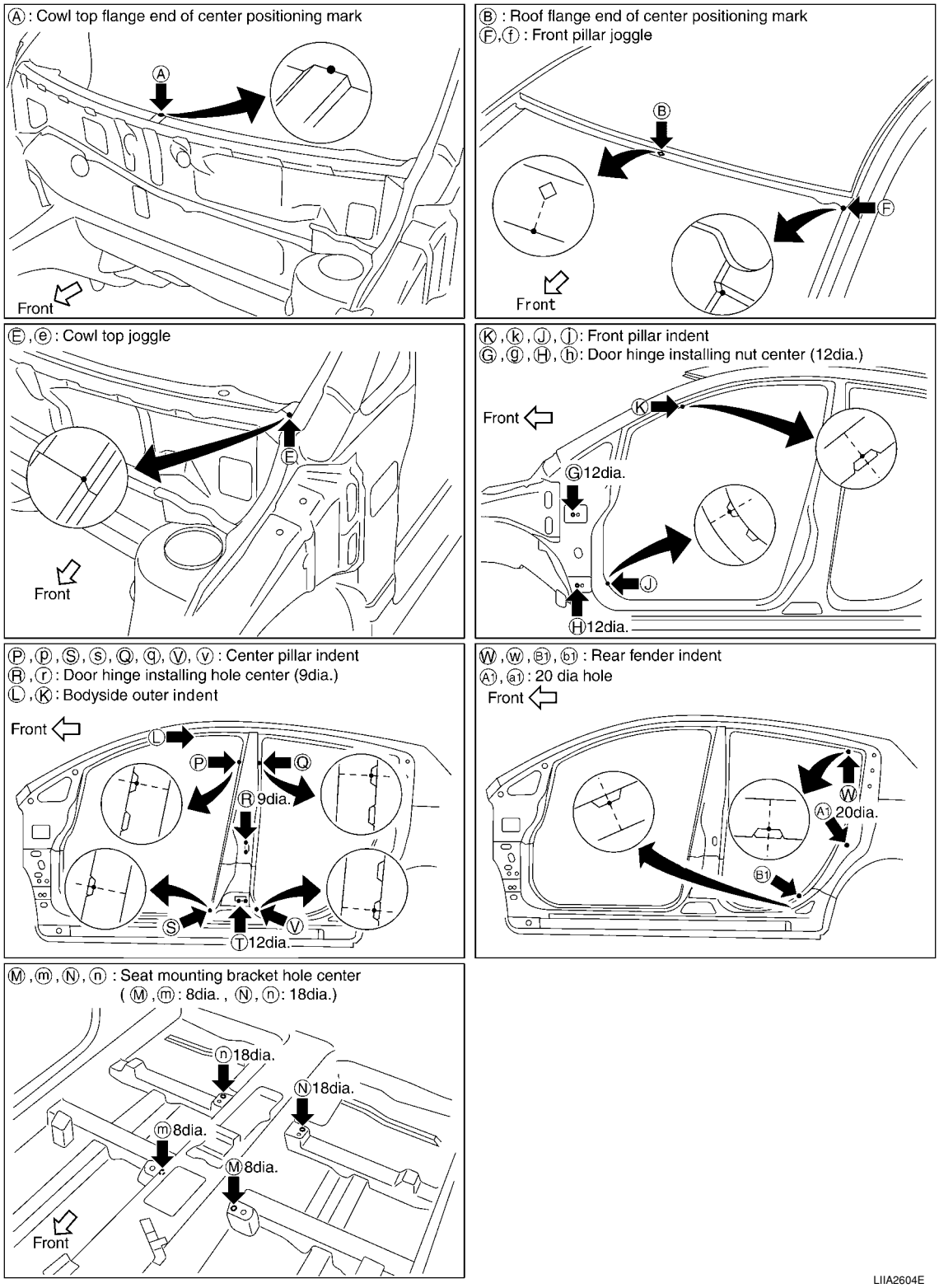

PASSENGER COMPARTMENT SEDAN

Figures marked with a (*) indicate symmetrically identical dimensions on both right and left side of the vehicle.

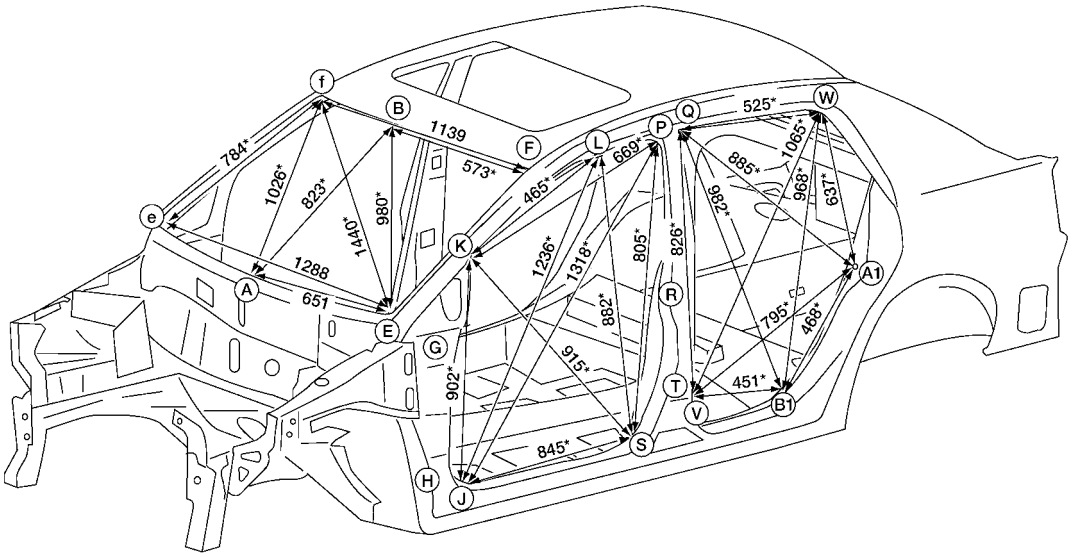

Point	Dimension	Point	Dimension	Point	Dimension
Ⓚ~ⓚ	1,240	Ⓠ~ⓐ1	1,580*	Ⓜ~ⓚ	1,103*
Ⓚ~ⓙ	1,586*	Ⓠ~ⓑ1	1,628*	Ⓜ~Ⓟ	1,250*
Ⓚ~ⓟ	1,405*	Ⓠ~ⓦ	1,440*	Ⓜ~Ⓙ	705*
Ⓚ~ⓢ	1,613*	Ⓥ~ⓥ	1,382	Ⓜ~Ⓢ	704*
Ⓙ~ⓙ	1,373	Ⓥ~ⓐ1	1,588*	Ⓝ~Ⓠ	1,162*
Ⓙ~Ⓟ	1,855*	Ⓥ~ⓑ1	1,448*	Ⓝ~Ⓦ	1,541*
Ⓙ~ⓢ	1,612*	Ⓥ~ⓦ	1,746*	Ⓝ~Ⓐ1	1,172*
Ⓟ~ⓟ	1,232	Ⓦ~ⓦ	1,155	Ⓝ~Ⓑ1	834*
Ⓟ~ⓢ	1,550*	Ⓦ~ⓐ1	1,405*	Ⓝ~Ⓥ	603*
Ⓢ~ⓢ	1,383*	Ⓦ~ⓑ1	1,618*	Ⓖ~Ⓡ	1,158*
Ⓠ~ⓠ	1,234*	Ⓐ1~ⓐ1	1,379	Ⓖ~Ⓣ	1,170*
Ⓠ~Ⓥ	1,542*	Ⓐ1~ⓑ1	1,447*	Ⓗ~Ⓡ	1,205*
Ⓛ~Ⓘ	1,161	ⓜ~Ⓛ	1,237*	Ⓗ~Ⓣ	1,104*

Unit : mm

LIIA2886E

Measurement Points

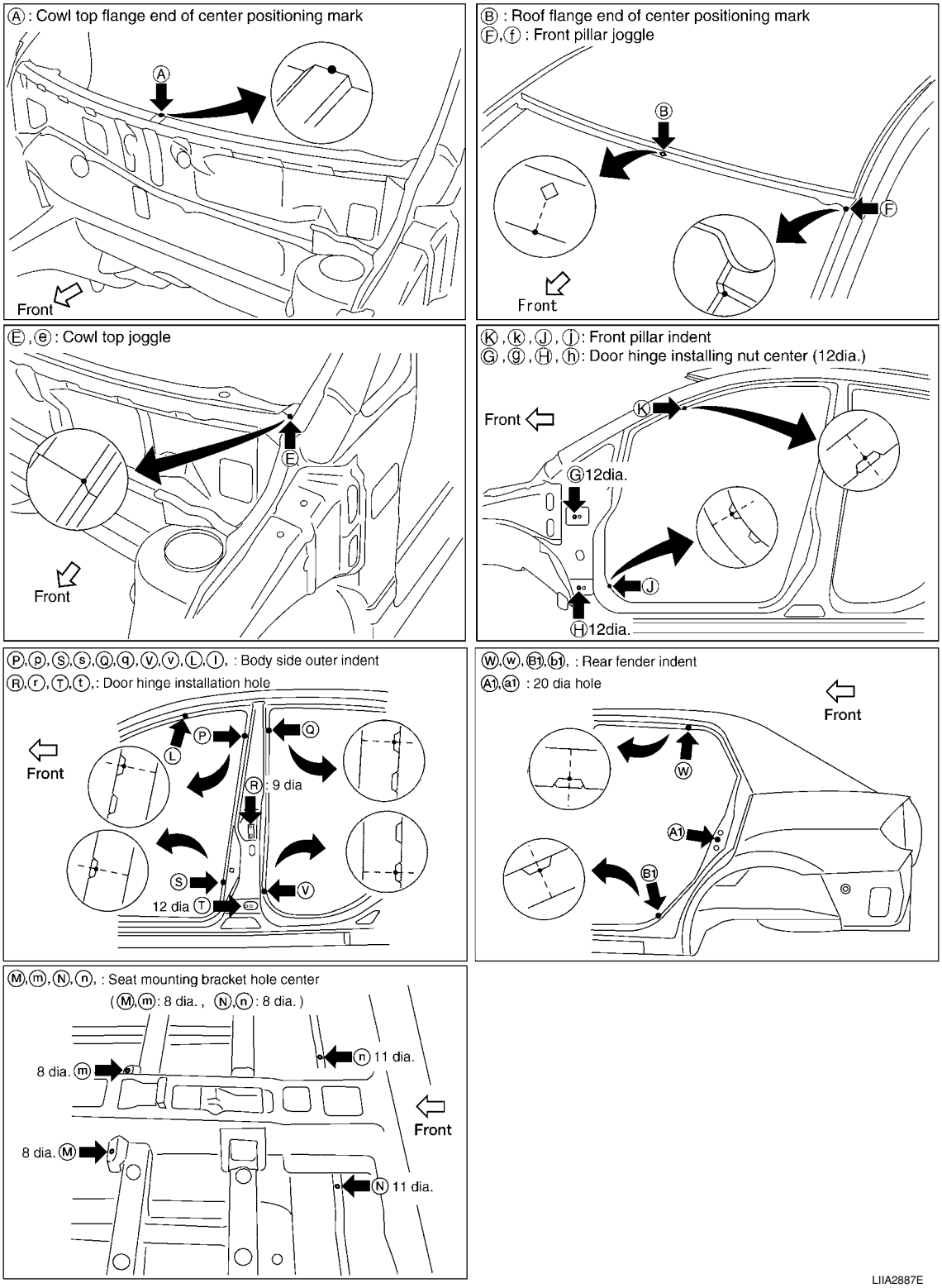

REAR BODY HATCHBACK

Measurement

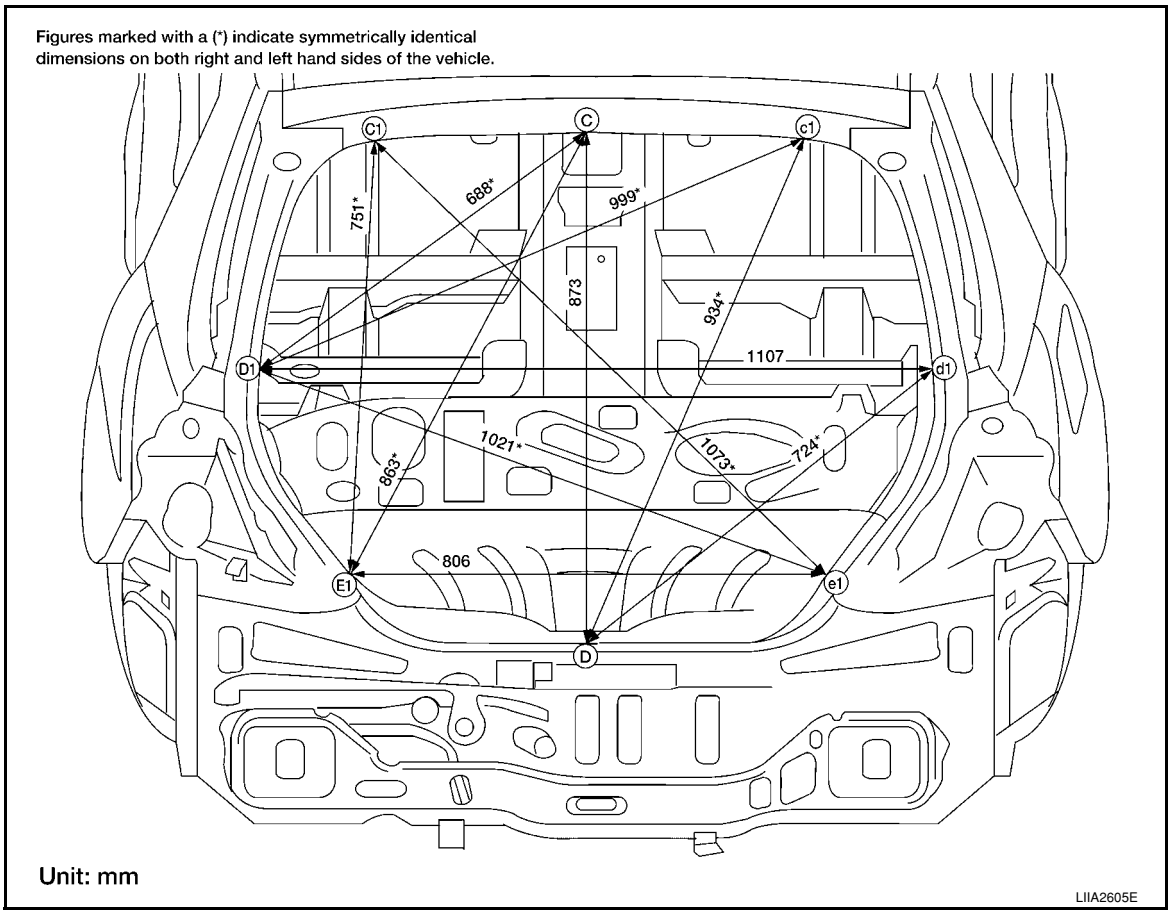

Measurement Points

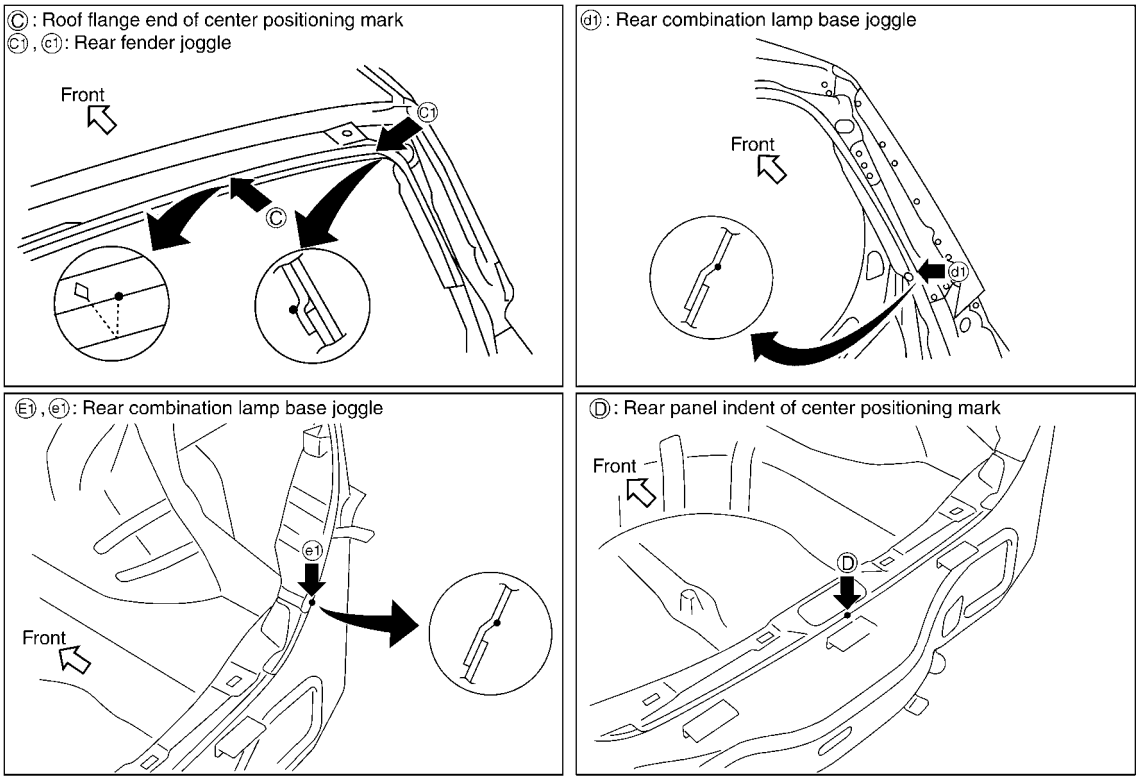

LIIA2606E

REAR BODY SEDAN

Figures marked with a (*) indicate symmetrically identical dimensions on both right and left hand sides of the vehicle.

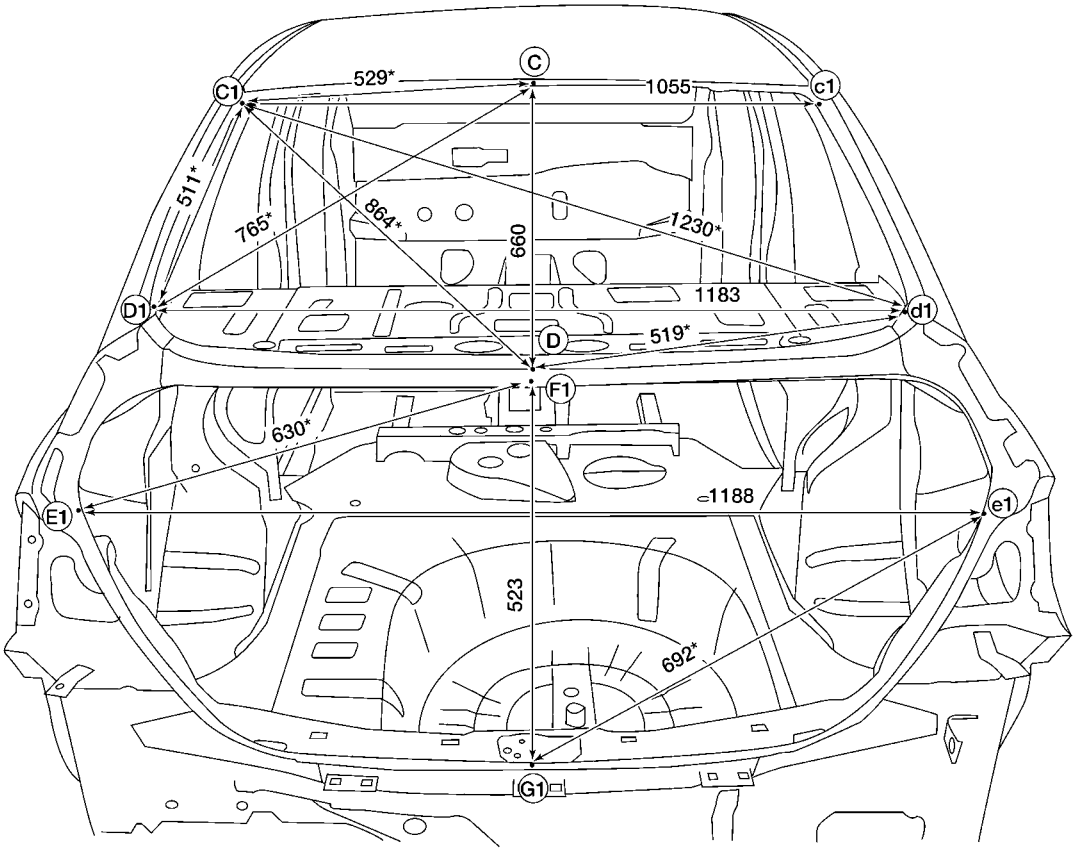

LIIA2880E

Measurement Points

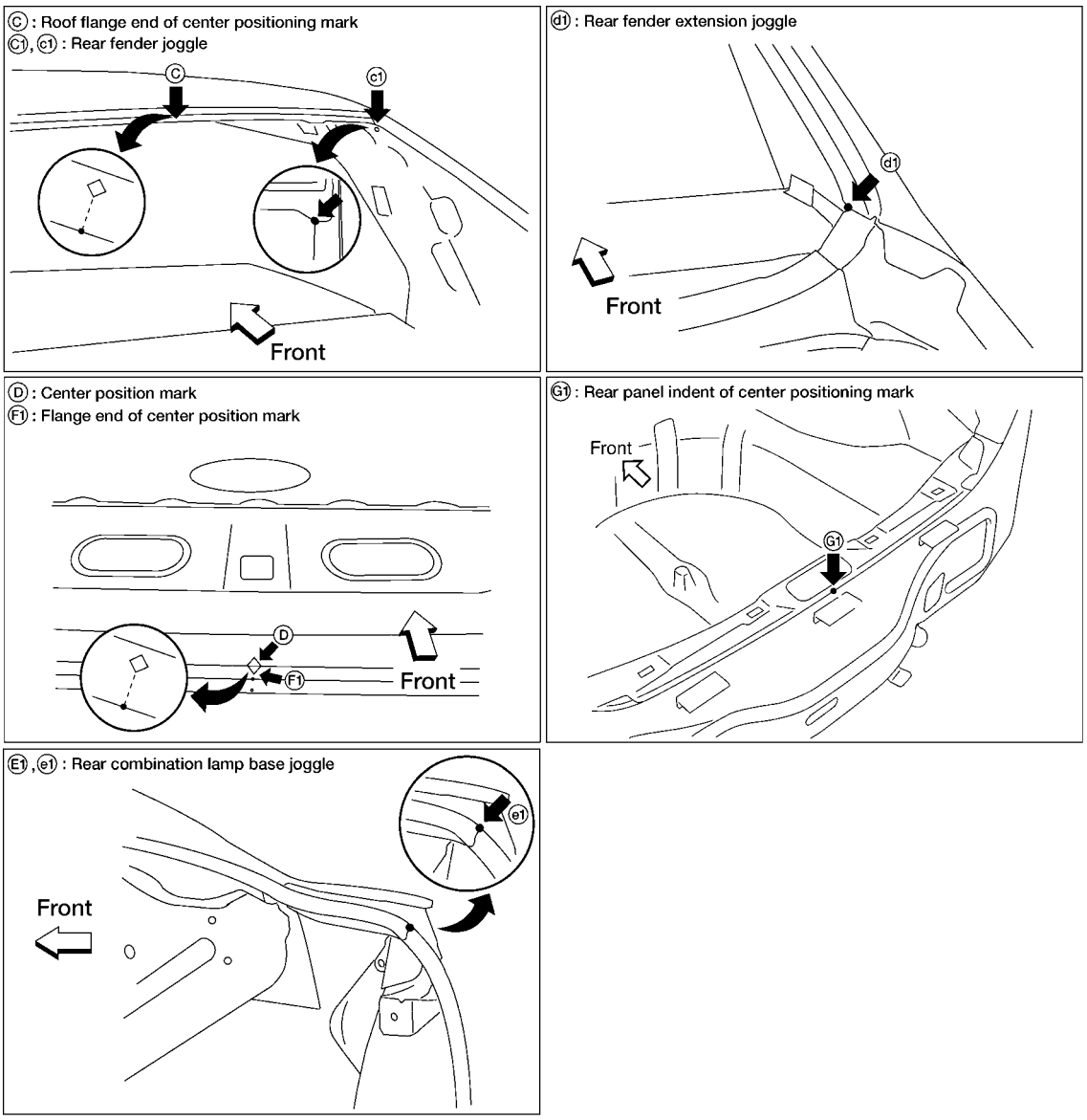

LIIA2888E

Handling Precaution for Plastics

INFOID:0000000001704124

HANDLING PRECAUTIONS FOR PLASTICS

Abbre-viation	Material name	Heat resisting temperature °C (°F)	Resistance to gasoline and solvents	Other cautions
PE	Polyethylene	60 (140)	Gasoline and most solvents are harmless if applied for a very short time (wipe up quickly).	Flammable
PVC	Polyvinyl Chloride	80 (176)	Same as above.	Poison gas is emitted when burned.
EPM/ EPDM	Ethylene Propylene (Diene) rub-ber	80 (176)	Same as above.	Flammable
TPO/ TPR	Thermoplastic Olefine/ Thermoplastic Rubber	80 (176)	Same as above.	Flammable
PP	Polypropylene	90 (194)	Same as above.	Flammable, avoid bat-tery acid.
UP	Polyester thermoset	90 (194)	Same as above.	Flammable
PS	Polystyrene	80 (176)	Avoid solvents.	Flammable
ABS	Acrylonitrile Butadiene Styrene resin	80 (176)	Avoid gasoline and solvents.	
AES	Acrylonitrile Ethylene Styrene	80 (176)	Same as above.	
PMMA	Polymethyl Methacrylate	85 (185)	Same as above.	
AAS	Acrylonitrile Acrylic Styrene	85 (185)	Same as above.	
AS	Acrylonitrile Styrene	85 (185)	Same as above.	
EVA	Polyvinyl Ethyl Acetate	90 (194)	Same as above.	
ASA	Acrylonitrile Styrene Acrylate	100 (222)	Same as above.	Flammable
PPO/ PPE	Polyphenylene Oxide/ Polyphenylene Ether	110 (230)	Same as above.	
PC	Polycarbonate	120 (248)	Same as above.	
PAR	Polyacrylate	180 (356)	Same as above.	
L-LDPE	Lenear Low Density PE	45 (100)	Gasoline and most solvents are harmless.	Flammable
PUR	Polyurethane	90 (194)	Same as above.	
TPU	Thermoplastic Urethane	110 (230)	Same as above.	
PPC	Polypropylene Composite	115 (239)	Same as above.	Flammable
POM	Polyacetal	120 (248)	Same as above.	Avoid battery acid.
PBT+PC	Polybutylene Terephtha-late+Polycarbonate	120 (248)	Same as above.	Flammable
PA	Polyamide (Nylon)	140 (284)	Same as above.	Avoid immersing in wa-ter.
PBT	Polybutylene Terephthalate	140 (284)	Same as above.	
FRP	Fiber Reinforced Plastics	170 (338)	Same as above.	Avoid battery acid.
PET	Polyethylene Terephthalate	180 (356)	Same as above.	
PEI	Polyetherimide	200 (392)	Same as above.	

1. When repairing and painting a portion of the body adjacent to plastic parts, consider their characteristics (influence of heat and solvent) and remove them if necessary or take suitable measures to protect them.
2. Plastic parts should be repaired and painted using methods suiting the materials' characteristics.

LOCATION OF PLASTIC PARTS

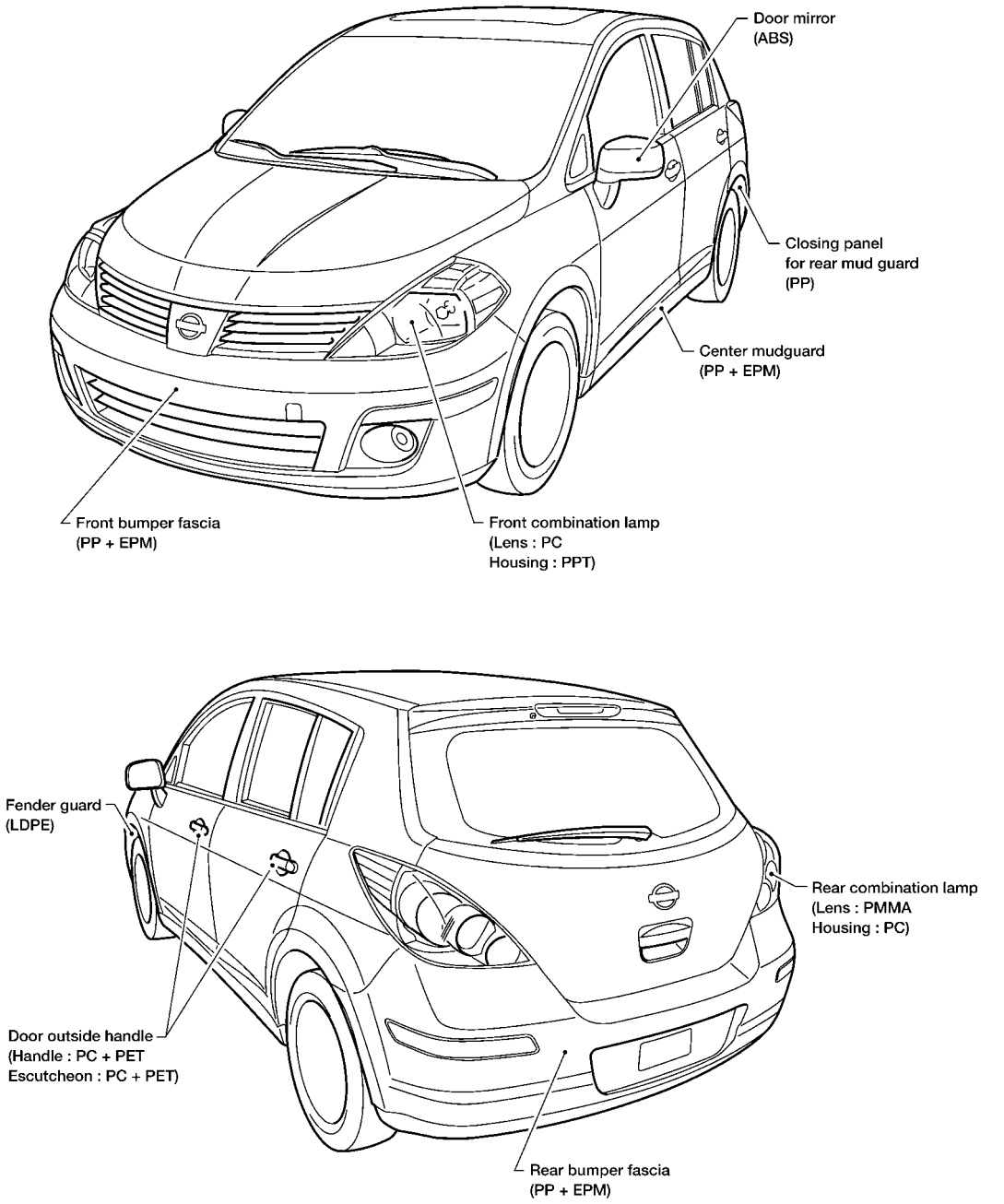
Door mirror
(ABS)
Closing panel
for rear mud guard
(PP)
Center mudguard
(PP + EPM)
Front bumper fascia
(PP + EPM)
Front combination lamp
(Lens : PC
Housing : PPT)
Fender guard
(LDPE)
Rear combination lamp
(Lens : PMMA
Housing : PC)
Door outside handle
(Handle : PC + PET
Escutcheon : PC + PET)
Rear bumper fascia
(PP + EPM)
LIIA2587E

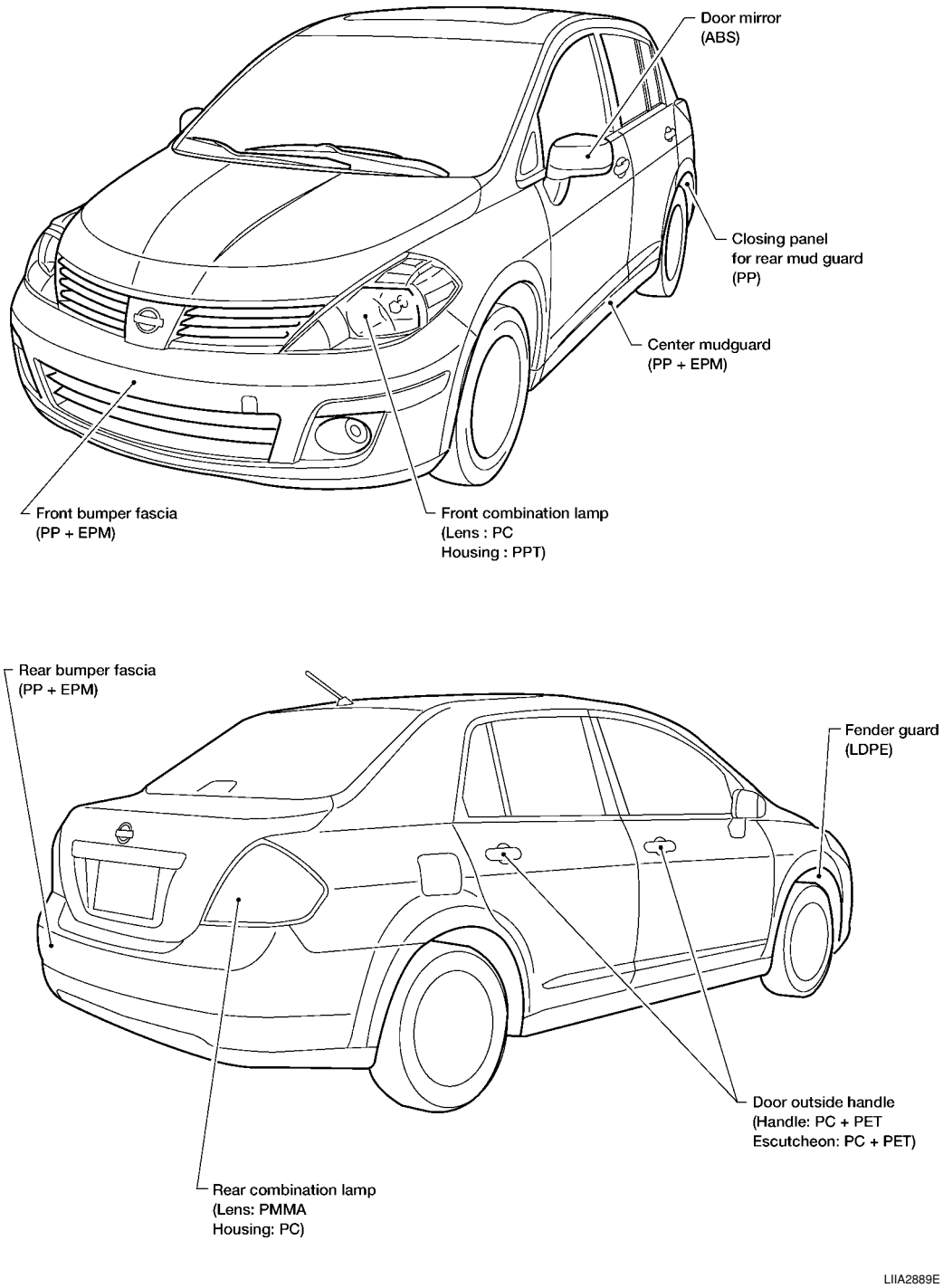
Door mirror
(ABS)
Closing panel
for rear mud guard
(PP)
Center mudguard
(PP + EPM)
Front bumper fascia
(PP + EPM)
Front combination lamp
(Lens : PC
Housing : PPT)
Rear bumper fascia
(PP + EPM)
Fender guard
(LDPE)
Door outside handle
(Handle: PC + PET
Escutcheon: PC + PET)
Rear combination lamp
(Lens: PMMA
Housing: PC)
LIIA2889E

Interior

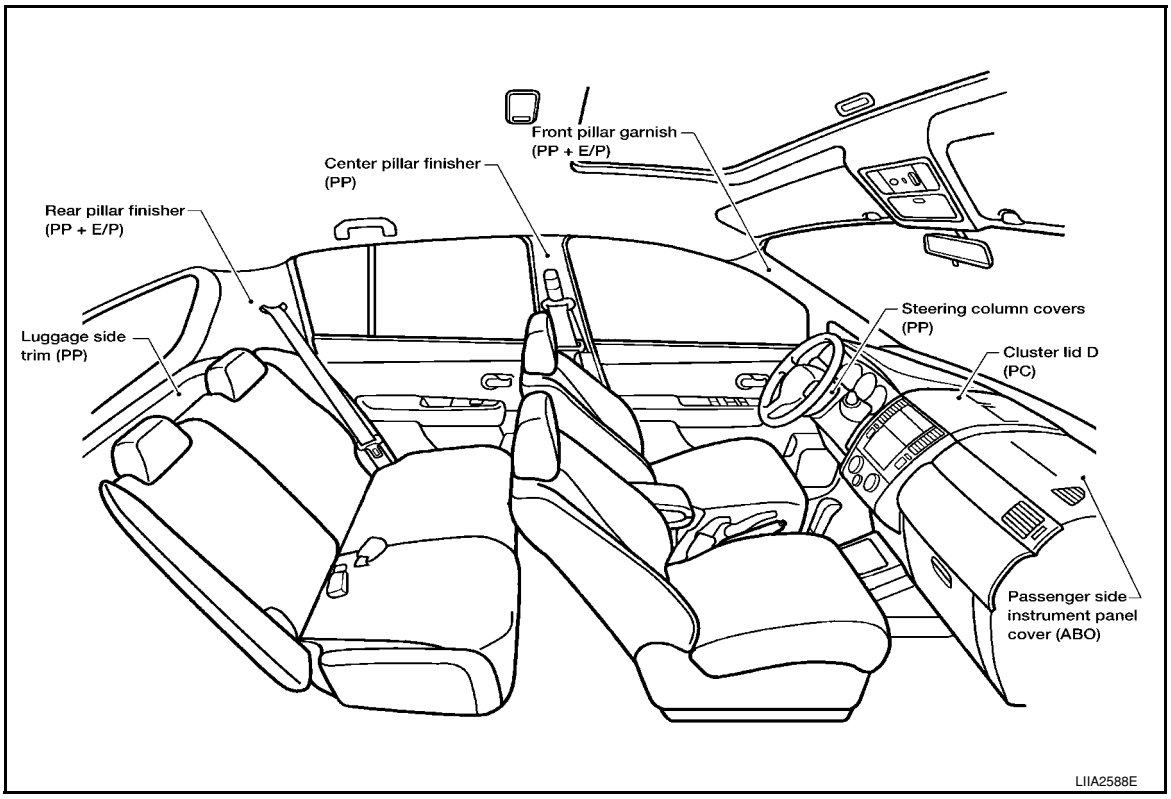

Precaution in Repairing High Strength Steel

INFOID:0000000001704125

High strength steel is used for body panels in order to reduce vehicle weight.
Accordingly, precautions in repairing automotive bodies made of high strength steel are described below:

HIGH STRENGTH STEEL (HSS) USED IN NISSAN VEHICLES

Tensile strength	Nissan/Infiniti designation	Major applicable parts
373 N/mm^2 (38kg/mm^2 ,54klb/sq in)	SP130	• Front & rear side member assembly • Front side member closing plate assembly • Front strut housing • Lower dash • Rear seat crossmember • Other reinforcements
785-1350 N/mm^2 (80-138kg/mm^2 , 114-196klb/sq in)	SP150	• Center pillar reinforcement (Component part) • Outer roof side rail reinforcement (Component part)

SP130 is the most commonly used HSS.

SP150 HSS is used only on parts that require much more strength.

Read the Following Precautions When Repairing HSS:

1. Additional points to consider

- The repair of reinforcements (such as side members) by heating is not recommended since it may weaken the component. When heating is unavoidable, do not heat HSS parts above 550°C (1,022°F).
  Verify heating temperature with a thermometer.
  (Crayon-type and other similar type thermometer are appropriate.)

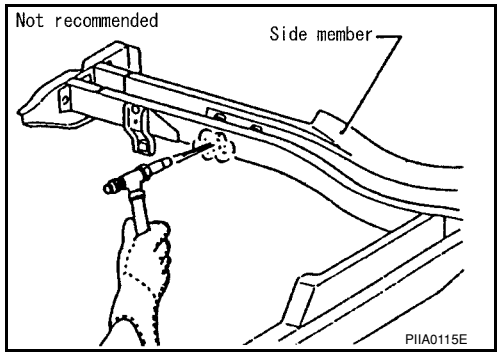

- When straightening body panels, use caution in pulling any HSS panel. Because HSS is very strong, pulling may cause deformation in adjacent portions of the body. In this case, increase the number of measuring points, and carefully pull the HSS panel.

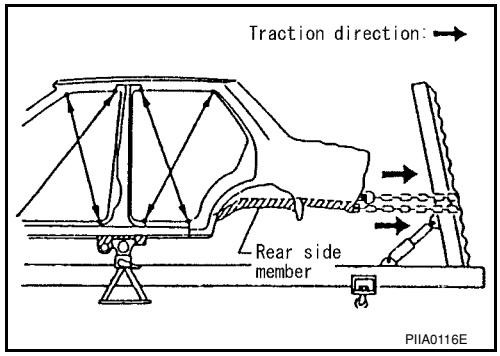

- When cutting HSS panels, avoid gas (torch) cutting if possible. Instead, use a saw to avoid weakening surrounding areas due to heat. If gas (torch) cutting is unavoidable, allow a minimum margin of 50 mm (1.97in).

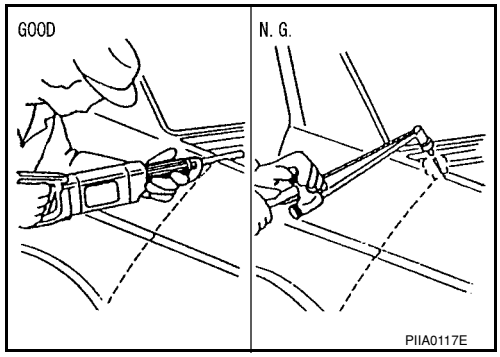

- When welding HSS panels, use spot welding whenever possible in order to minimize weakening surrounding areas due to heat.
  If spot welding is impossible, use M.I.G. welding. Do not use gas (torch) welding because it is inferior in welding strength.

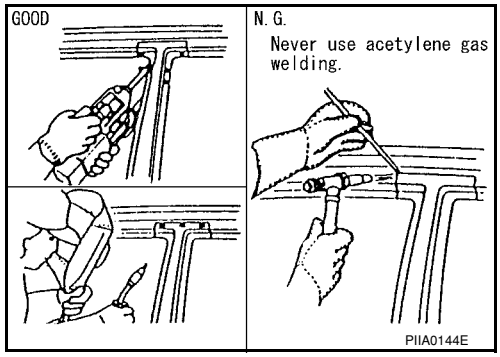

- The spot weld on HSS panels is harder than that of an ordinary steel panel.
  Therefore, when cutting spot welds on a HSS panel, use a low speed high torque drill (1,000 to 1,200 rpm) to increase drill bit durability and facilitate the operation.

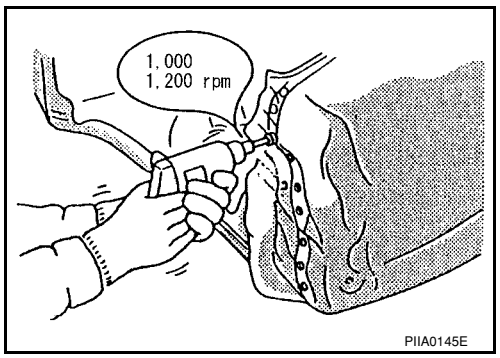

2. Precautions in spot welding HSS
   This work should be performed under standard working conditions. Always note the following when spot welding HSS:
   - The electrode tip diameter must be sized properly according to the metal thickness.

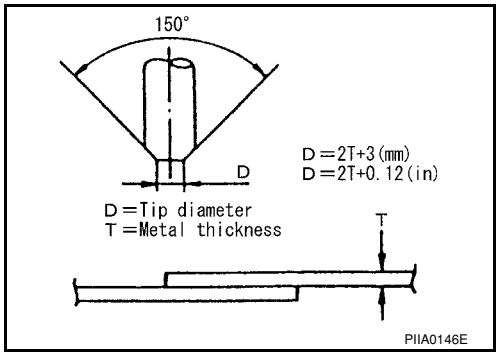

- The panel surfaces must fit flush to each other, leaving no gaps.

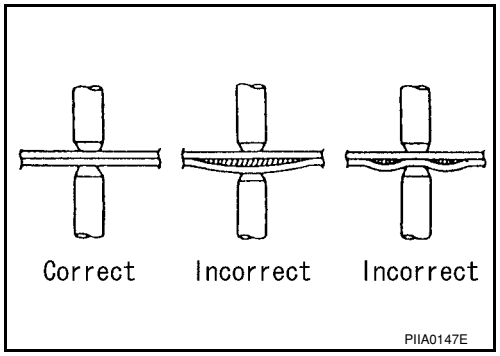

- Follow the specifications for the proper welding pitch.

Unit: mm

Thickness (t)	Minimum pitch (ℓ)
0.6 (0.024)	10 (0.39) or over
0.8 (0.031)	12 (0.47) or over
1.0 (0.039)	18 (0.71) or over
1.2 (0.047)	20 (0.79) or over
1.6 (0.063)	27 (1.06) or over
1.8 (0.071)	31 (1.22) or over

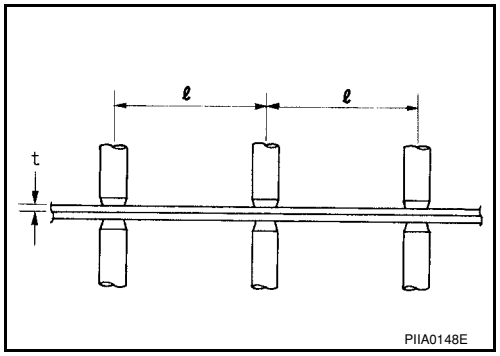

Rear fender hemming process

1. A wheel arch is to be installed and hemmed over left and right outer wheel house.
2. In order to hem the wheel arch, it is necessary to repair any damaged or defaced parts around outer wheel house.
   CAUTION:
   Ensure that the area that is to be glued around outer wheelhouse is undamaged or defaced.

Procedure of the hemming process

- Peel off old bonding material on the surface of outer wheelhouse and clean thoroughly.
- Peel off a primer coat in the specified area where new adhesive is to be applied on rear fender (the replacing part).
- Apply new adhesive to both specified areas of outer wheelhouse and rear fender.

<Adhesive> 3M automix panel bond 8115, or any equivalents

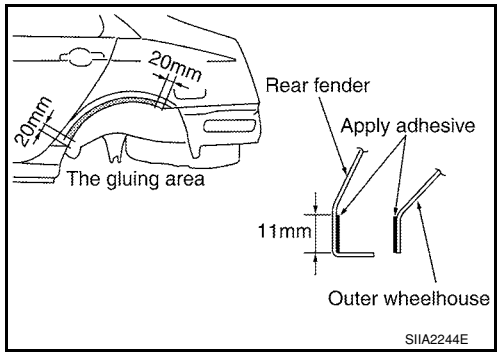

- Attach rear fender to the body of the car, and weld the required part except the hemming part.

- Bend the welded part starting from the center of the wheel arch gradually with a hammer and a dolly. (Also hem the end of the flange.)
- Hemming with a hammer is conducted to an approximate angle of 80 degrees.

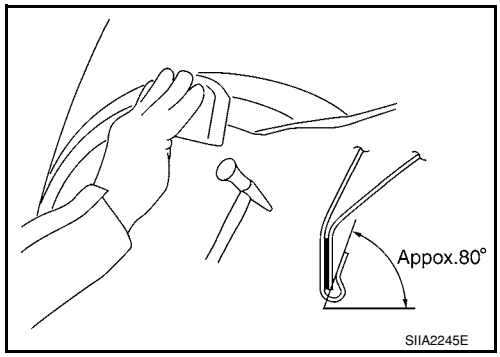

- Starting from the center, hem the wheel arch gradually, using slight back and forth motion with a hemming tool.

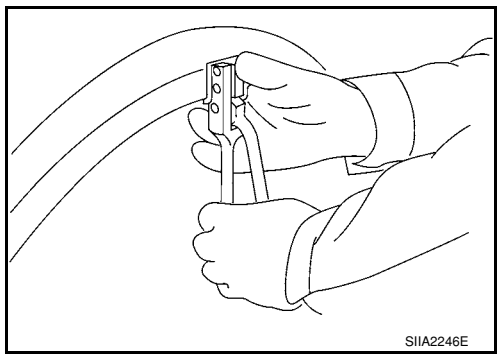

- Seal up the area around the hemmed end of the flange.

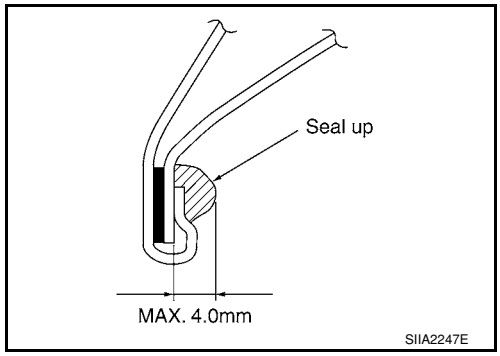

Foam Repair

INFOID:0000000001704126

During factory body assembly, foam insulators are installed in certain body panels and locations around the vehicle. Use the following procedure(s) to replace any factory-installed foam insulators.

URETHANE FOAM APPLICATIONS

Use commercially available spray foam for sealant (foam material) repair of material used on vehicle. Read instructions on product for fill procedures.

FILL PROCEDURES

1. Fill procedures after installation of service part.

- Remove foam material remaining on vehicle side.
- Clean area in which foam was removed.
- Install service part.
- Insert nozzle into hole near fill area and fill foam material or fill in enough to close gap with the service part.

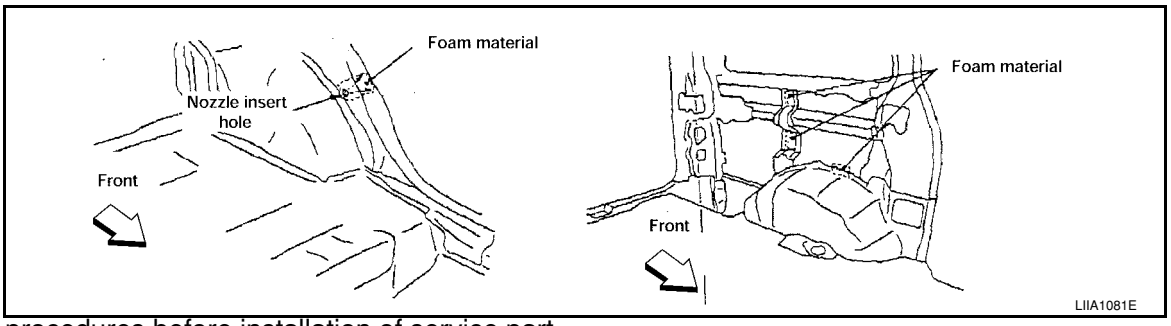

2. Fill procedures before installation of service part.
- Remove foam material remaining on vehicle side.
- Clean area in which foam was removed.
- Fill foam material on wheelhouse outer side.

NOTE:
Fill in enough to close gap with service part while avoiding flange area.

- Install service part.

NOTE:
Refer to label for information on working times.

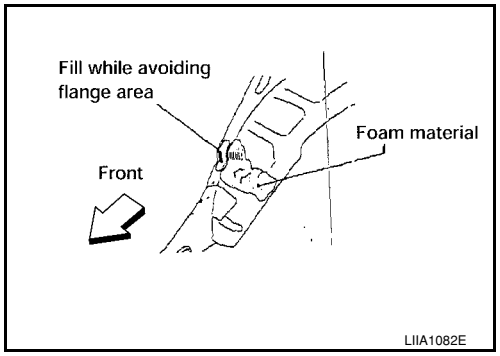

Hatchback

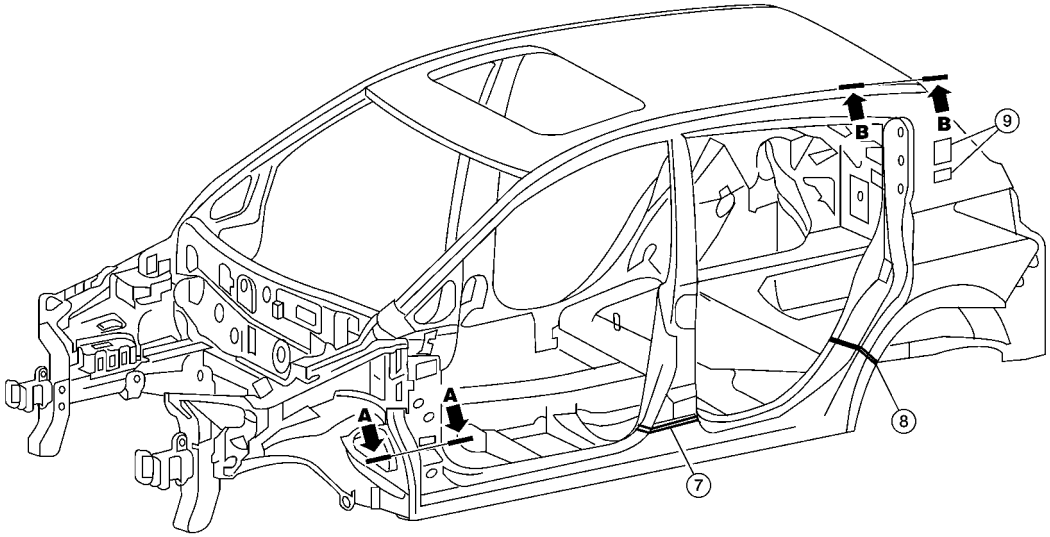

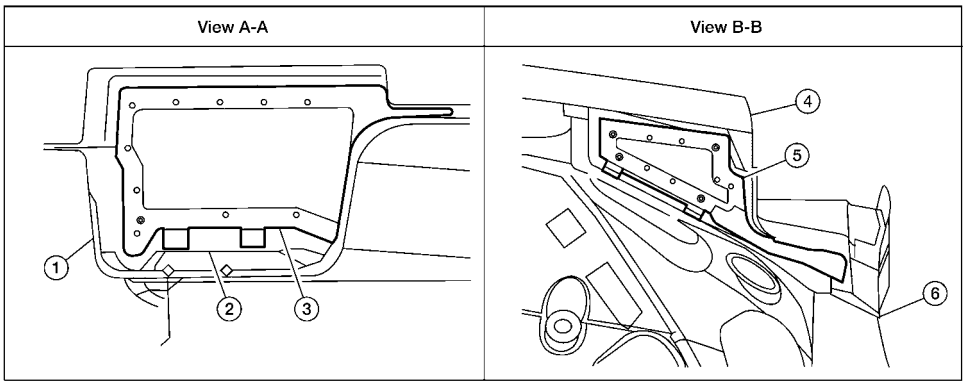

LIIA2665E

1. Body side outer	2. Front pillar lower reinforcement	3. Body side insulation (foam) front pillar
4. Roof panel assembly	5. Body side insulation (Foam) rear roof rail	6. Rear roof rail assembly
7. Body side insulation strip, center pillar	8. Body side insulation strip, rear pillar lower	9. Body side insulation strip, rear pillar upper

Sedan

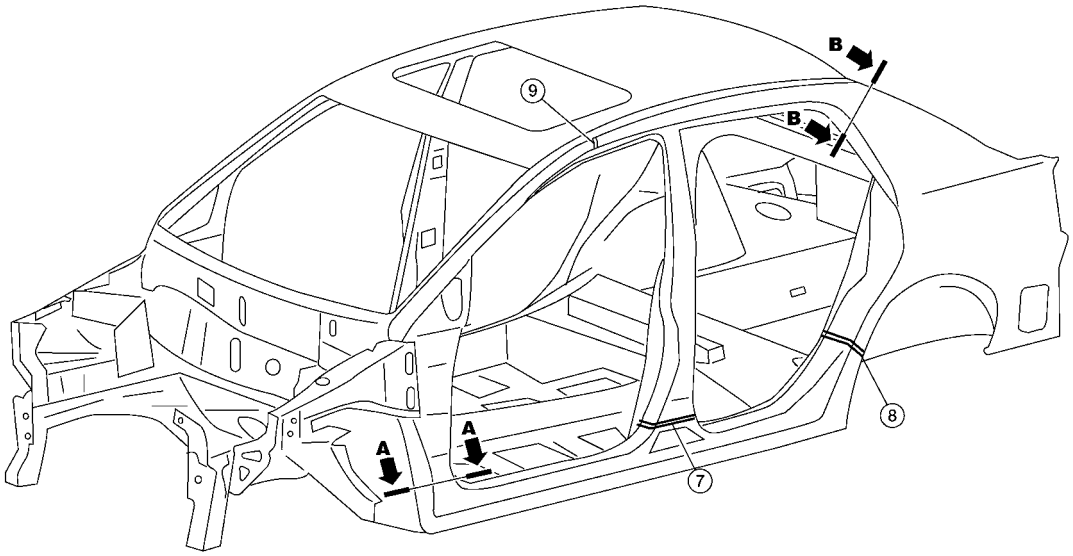

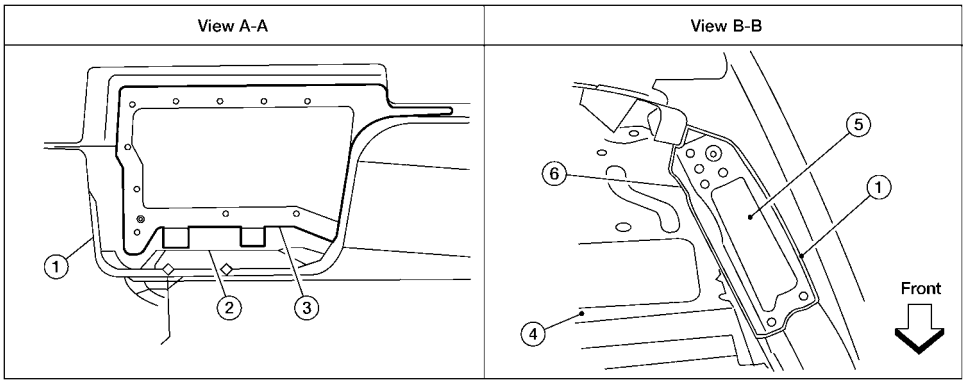

LIIA2891E

1. Body side outer	2. Front pillar lower reinforcement	3. Body side insulation (foam) front pillar
4. Parcel shelf	5. Body side insulation (Foam) rear pillar	6. Rear body side inner
7. Body side insulation strip, center pillar	8. Body side insulation strip, rear pillar lower	9. Body side insulation (foam) roof side

Replacement Operation

INFOID:0000000001704127

DESCRIPTION

This section is prepared for technicians who have attained a high level of skill and experience in repairing collision-damaged vehicles and also use modern service tools and equipment. Persons unfamiliar with body repair techniques should not attempt to repair collision-damaged vehicles by using this section.

Technicians are also encouraged to read Body Repair Manual (Fundamentals) in order to ensure that the original functions and quality of the vehicle can be maintained. The Body Repair Manual (Fundamentals) contains additional information, including cautions and warnings, that are not including in this manual. Technicians should refer to both manuals to ensure proper repairs.

Please note that this information is prepared for worldwide usage, and as such, certain procedures may not apply in some regions or countries.

The symbols used in this section for cutting and welding / brazing operations are shown below.

Saw cut or air chisel cut	
Spot weld: 2-spot welds	2-spot welds (2-panel overlapping portions); 3-spot welds (3-panel overlapping portions)
Spot weld: 3-spot welds	
MIG plug weld	
MIG seam weld/ Point weld	
Brazing	
Soldering	
Sealing	

PIIA0149E

- Front pillar butt joint can be determined anywhere within shaded area as shown in the figure. The best location for the butt joint is at position A due to the construction of the vehicle. Refer to the front pillar section.

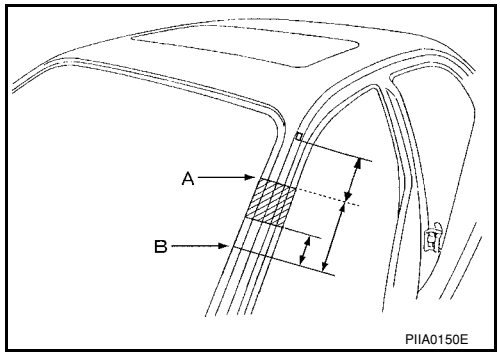

- Determine cutting position and record distance from the locating indent. Use this distance when cutting the service part. Cut outer front pillar over 60 mm above inner front pillar cut position.

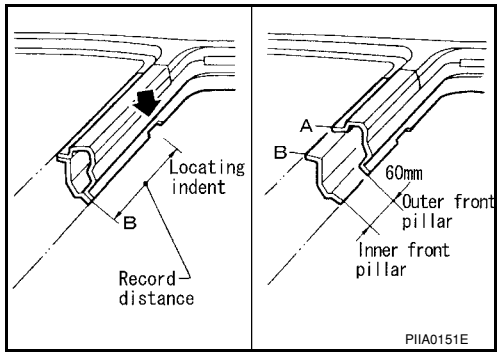

- Prepare a cutting jig to make outer pillar easier to cut. Also, this will permit service part to be accurately cut at joint position.

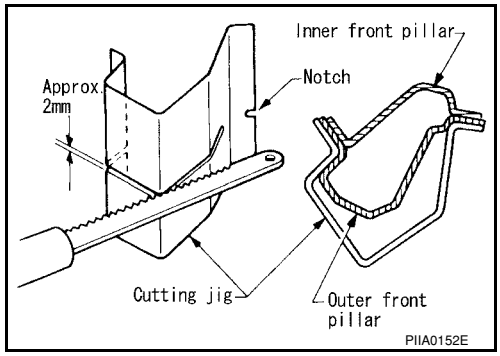

- An example of cutting operation using a cutting jig is as follows.

1. Mark cutting lines.
   A: Cut position of outer pillar
   B: Cut position of inner pillar
2. Align cutting line with notch on jig. Clamp jig to pillar.
3. Cut outer pillar along groove of jig. (At position A)
4. Remove jig and cut remaining portions.
5. Cut inner pillar at position B in same manner.

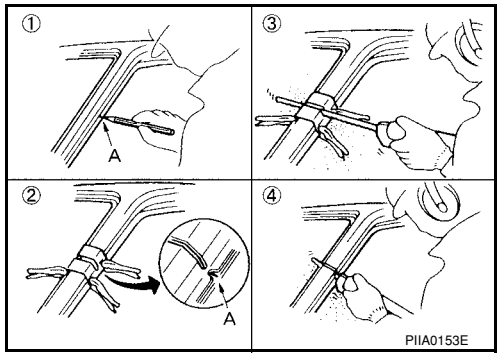

RADIATOR CORE SUPPORT

- Work after radiator core support upper and lower bolt on crossmembers have been removed.

Service Joint

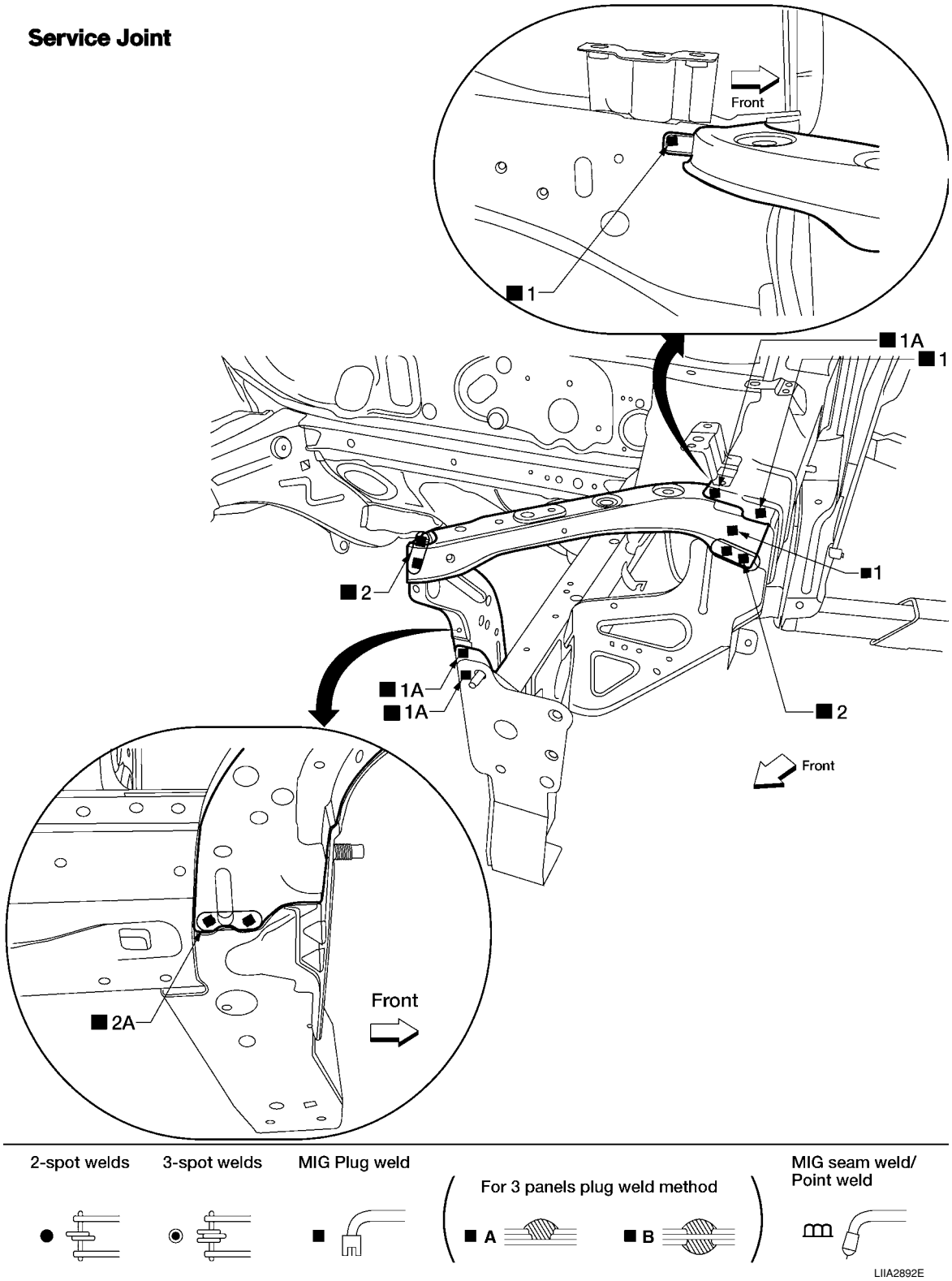

Change Parts

- Radiator core side support
- Radiator core support upper

HOODLEDGE LH

- Work after radiator core support upper and lower have been removed.

Service Joint

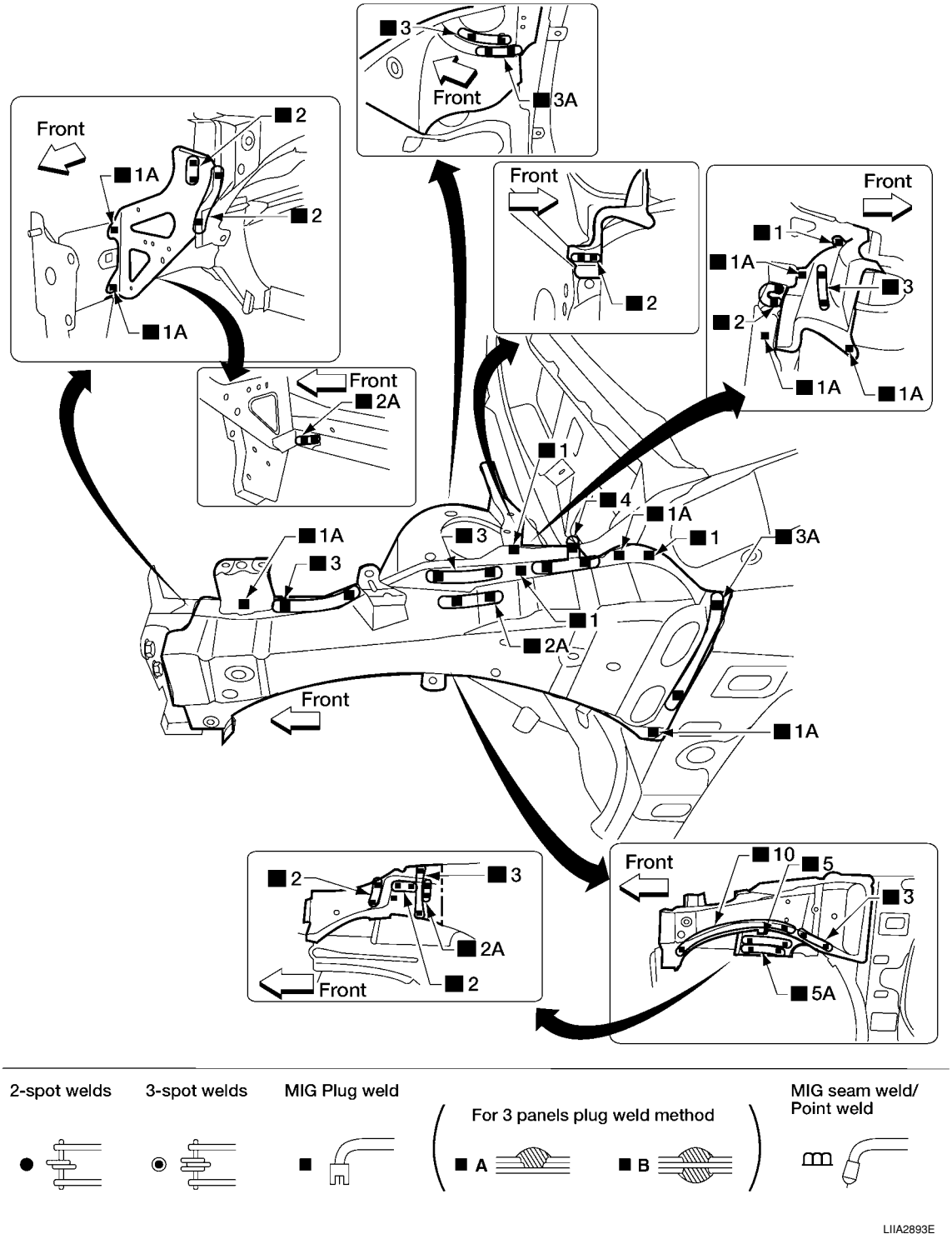

Change Parts

- Hoodledge reinforcement assembly
- Cowl top side upper
- Front strut housing
- Hoodledge upper
- Fender bracket
- Hoodledge connector

HOODLEDGE RH

- Work after radiator core support upper and lower have been removed.

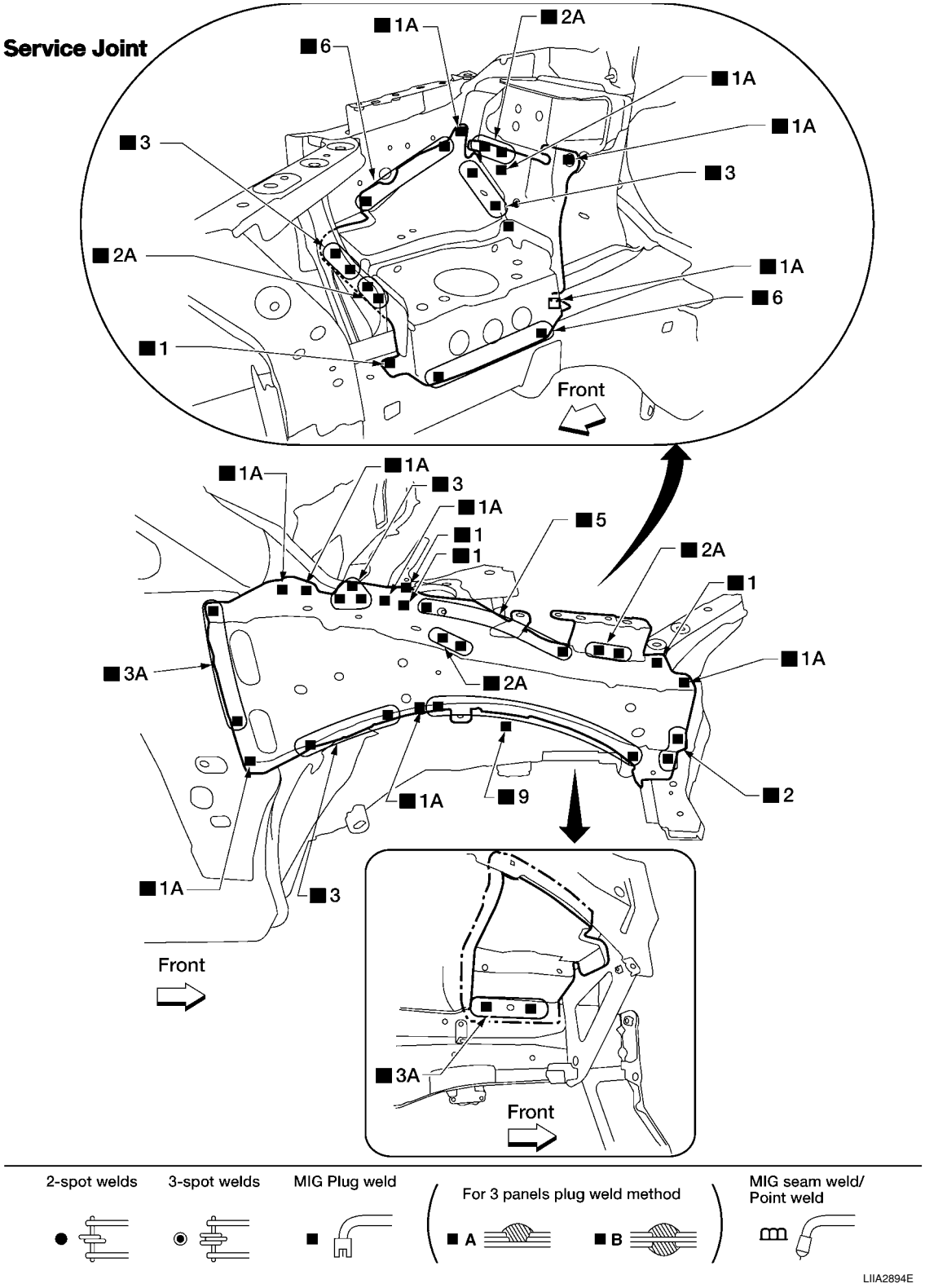

Change Parts

- Hoodledge reinforcement assembly
- Cowl top side upper
- Front strut housing
- Hoodledge upper
- Fender bracket
- Hoodledge connector

FRONT SIDE MEMBER

• Work after hoodledge and radiator core support have been removed.

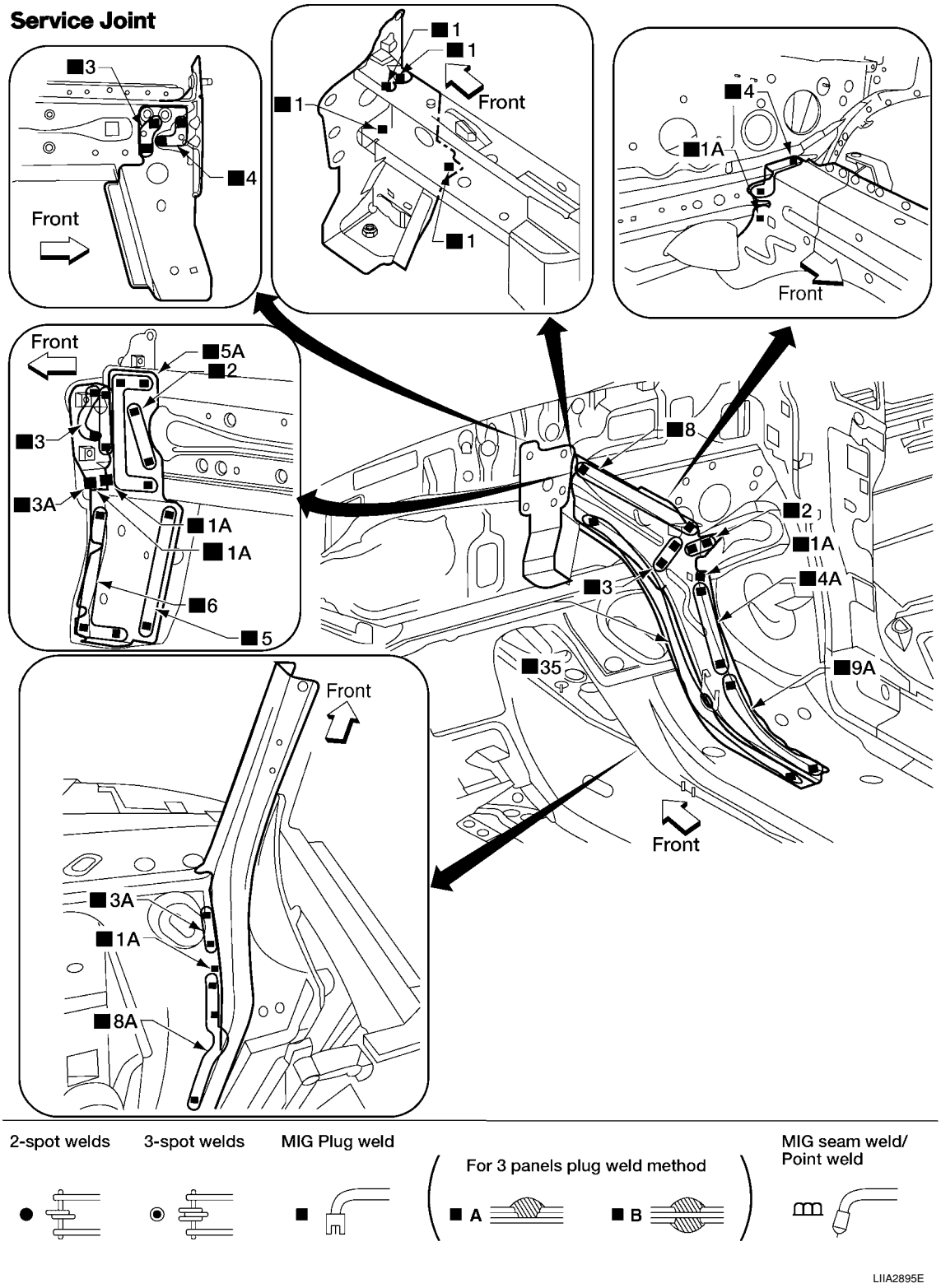

Change parts

- Front side member
- Front side member closing plate
- Front side member outrigger
- Frame bracket outer

FRONT SIDE MEMBER PARTIAL

LH

- Work after radiator core support and hoodledge connector have been removed.

Service Joint

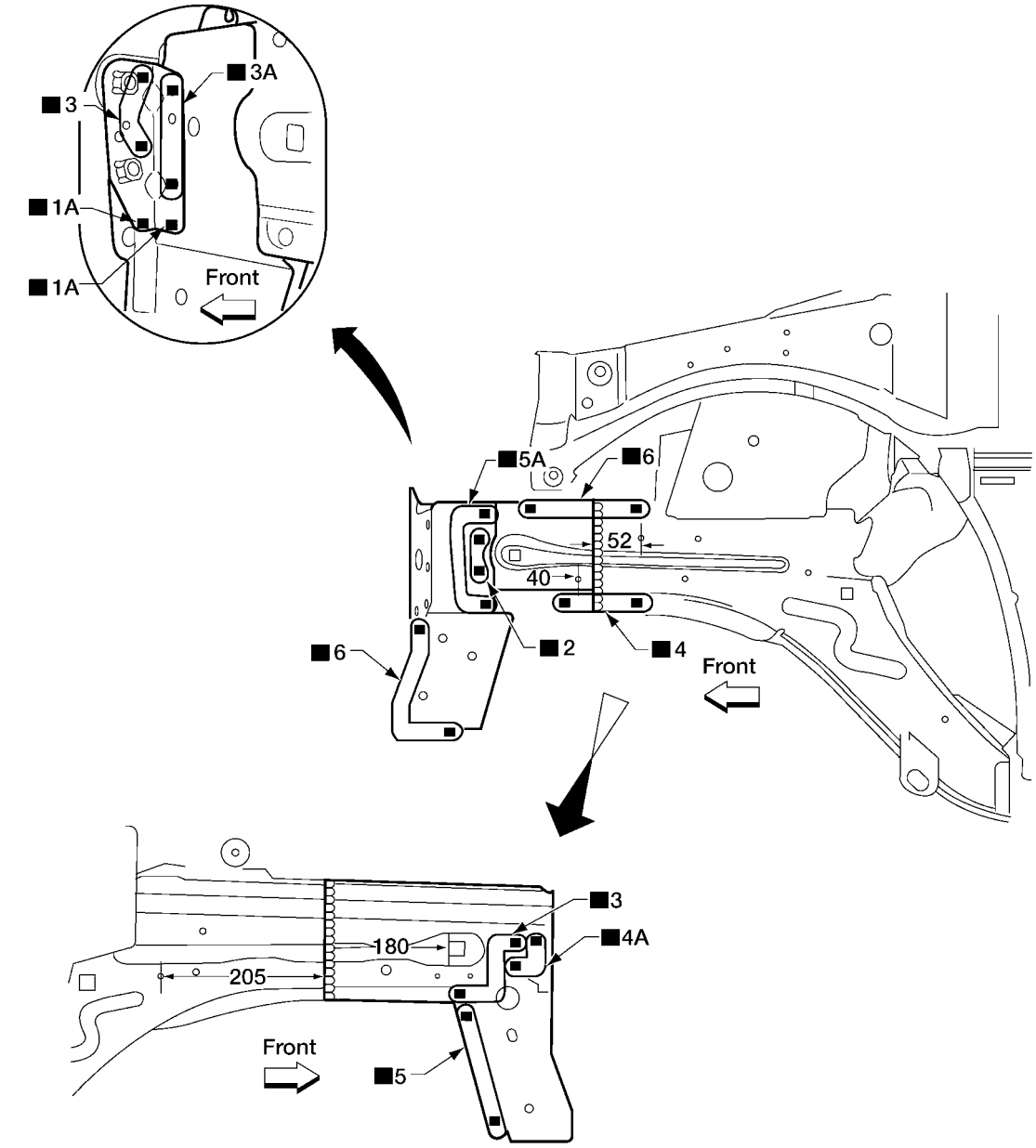

Unit: mm

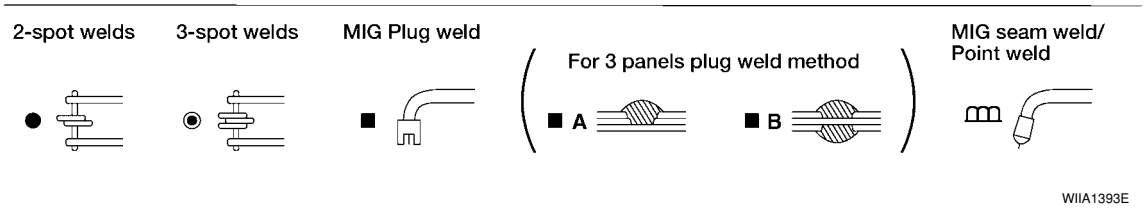

Change parts

- Front side member partial
- Front side member closing plate partial
- Frame bracket outer
- Frame bracket

RH

- Work after radiator core support and hoodledge connector have been removed.

Service Joint

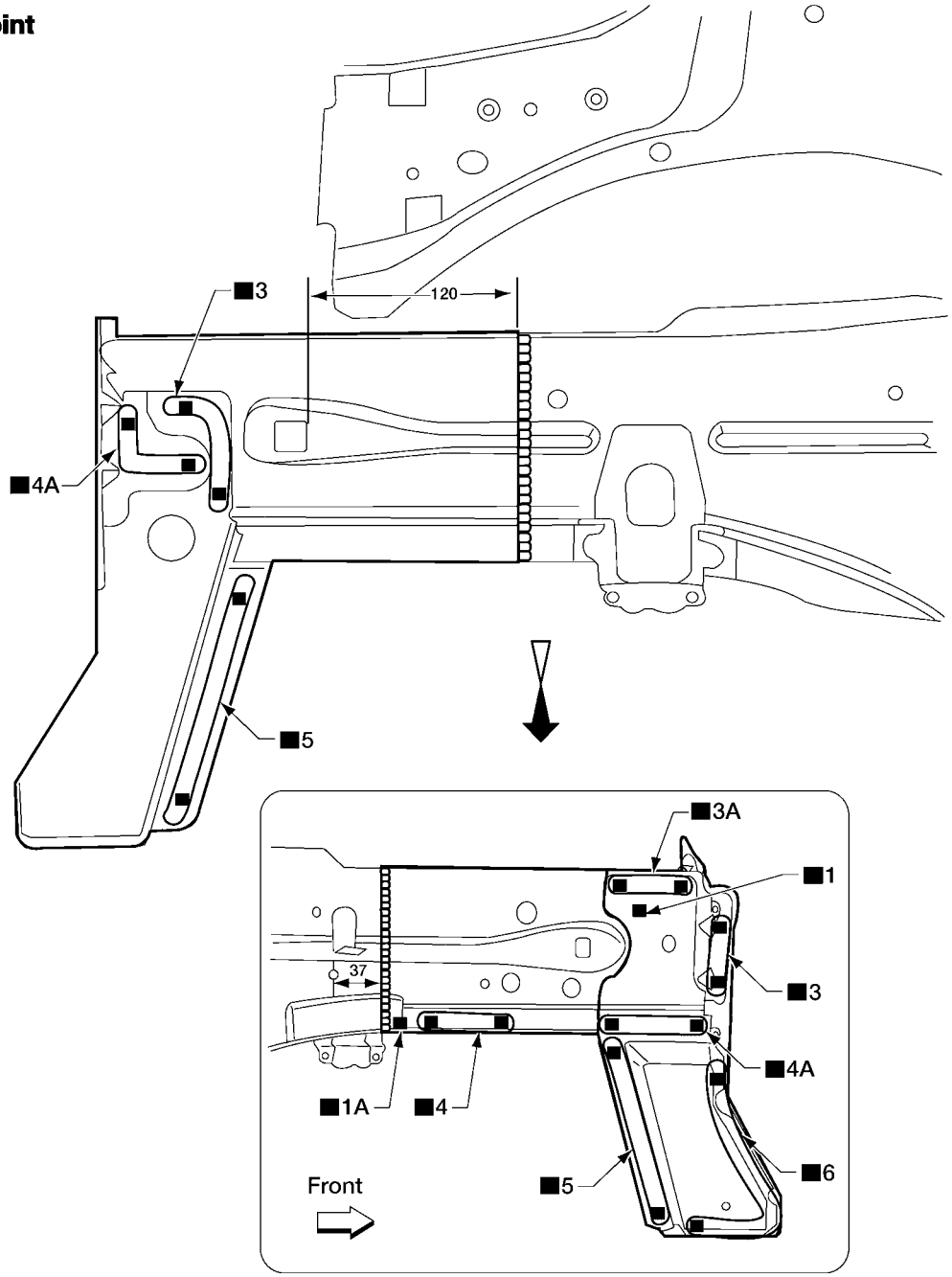

Unit:mm

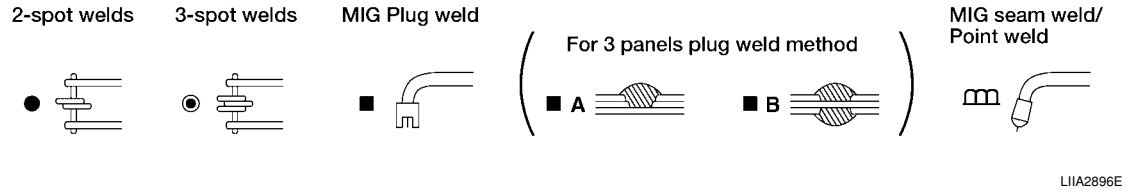

Change parts

- Front side member partial
- Front side member closing plate partial
- Frame bracket outer
- Frame bracket

OUTRIGGER

Service Joint

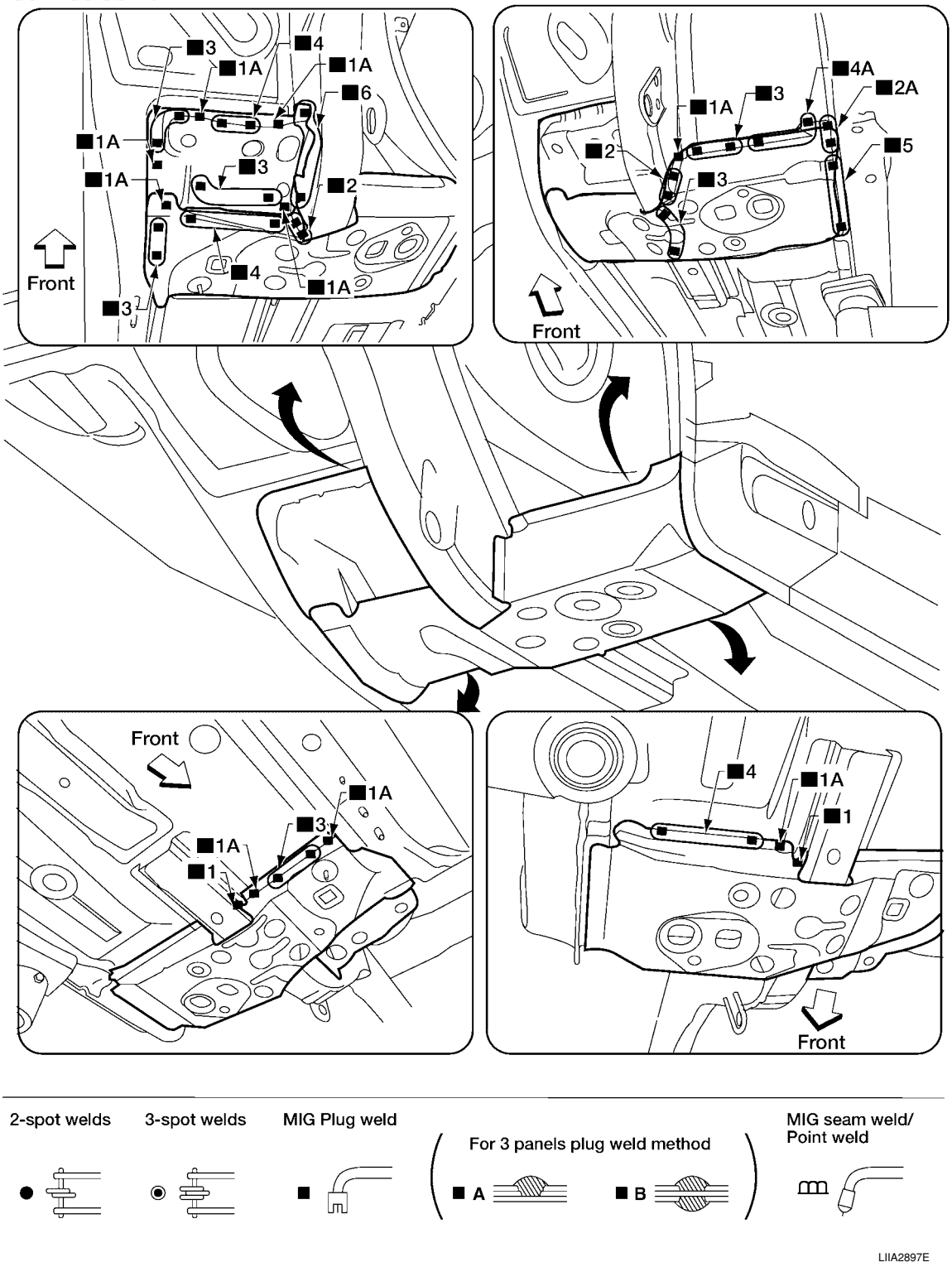

Change parts

- Outrigger
- Front suspension bracket

FRONT PILLAR

- Work after the rear hoodledge reinforcement and the outer sill reinforcement have been removed.

Service Joint

Unit: mm

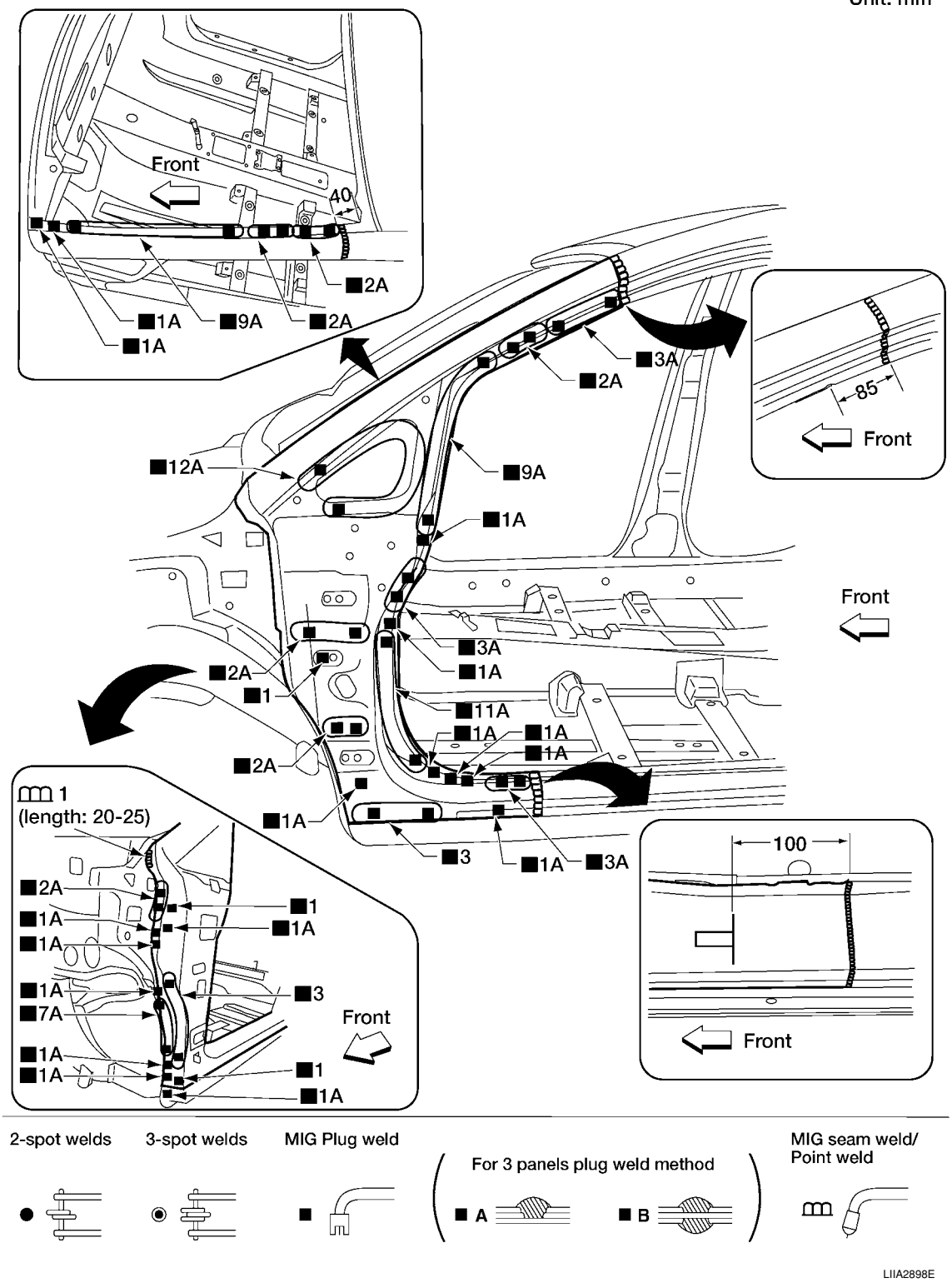

Change parts

- Front pillar section of side body

Service Joint

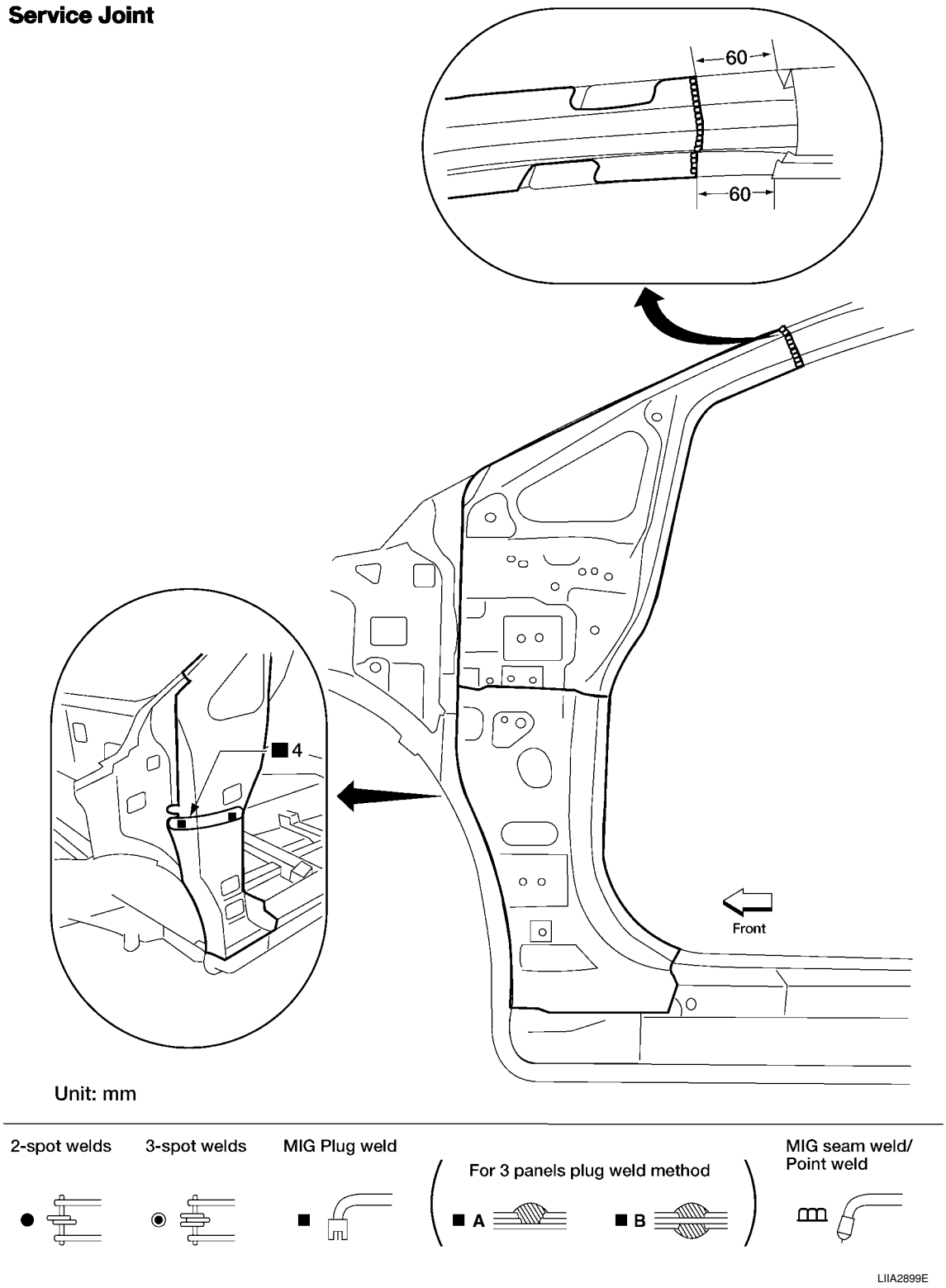

Change parts

- Front pillar upper reinforcement
- Front pillar lower reinforcement

Service Joint

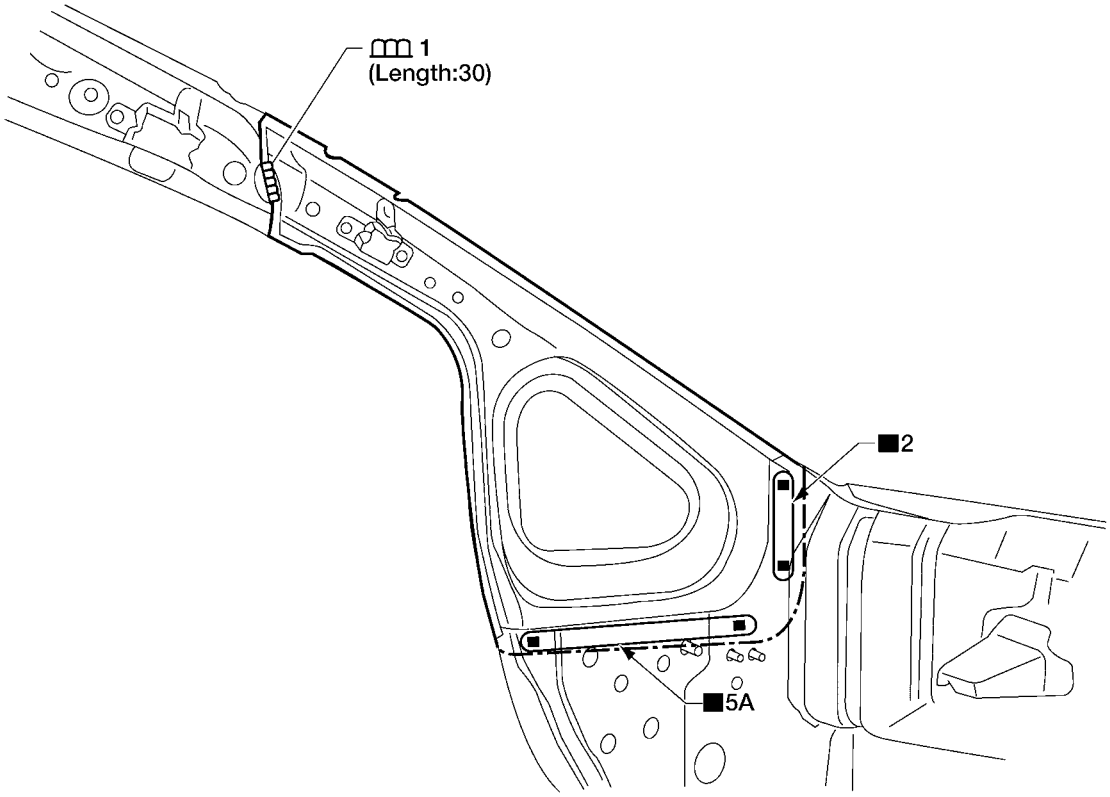

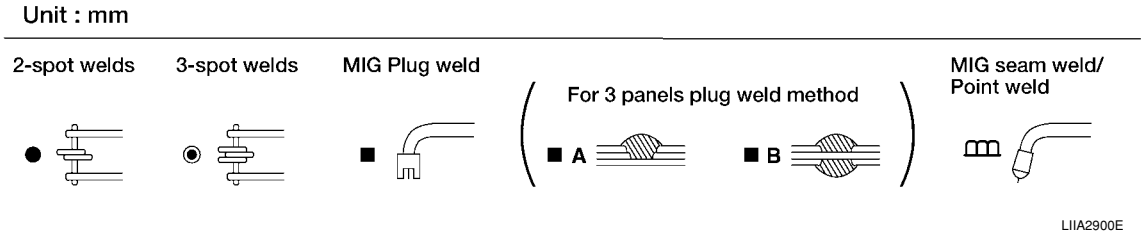

Change parts

- Front pillar inner reinforcement

DASH SIDE

Work after front pillar and outer sill reinforcement have been removed.

Service Joint

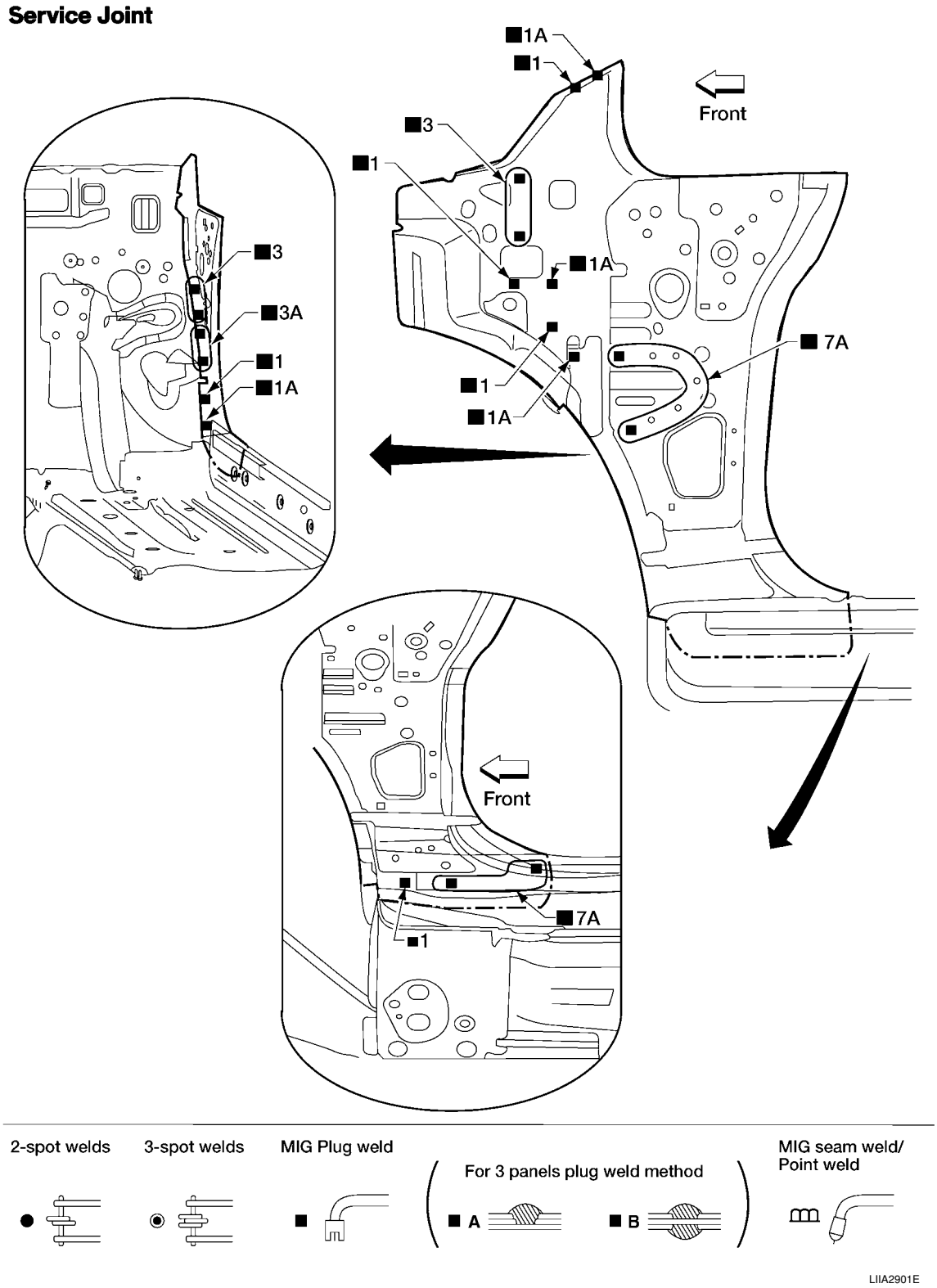

Change parts

- Dash side

CENTER PILLAR

Outer

Service Joint

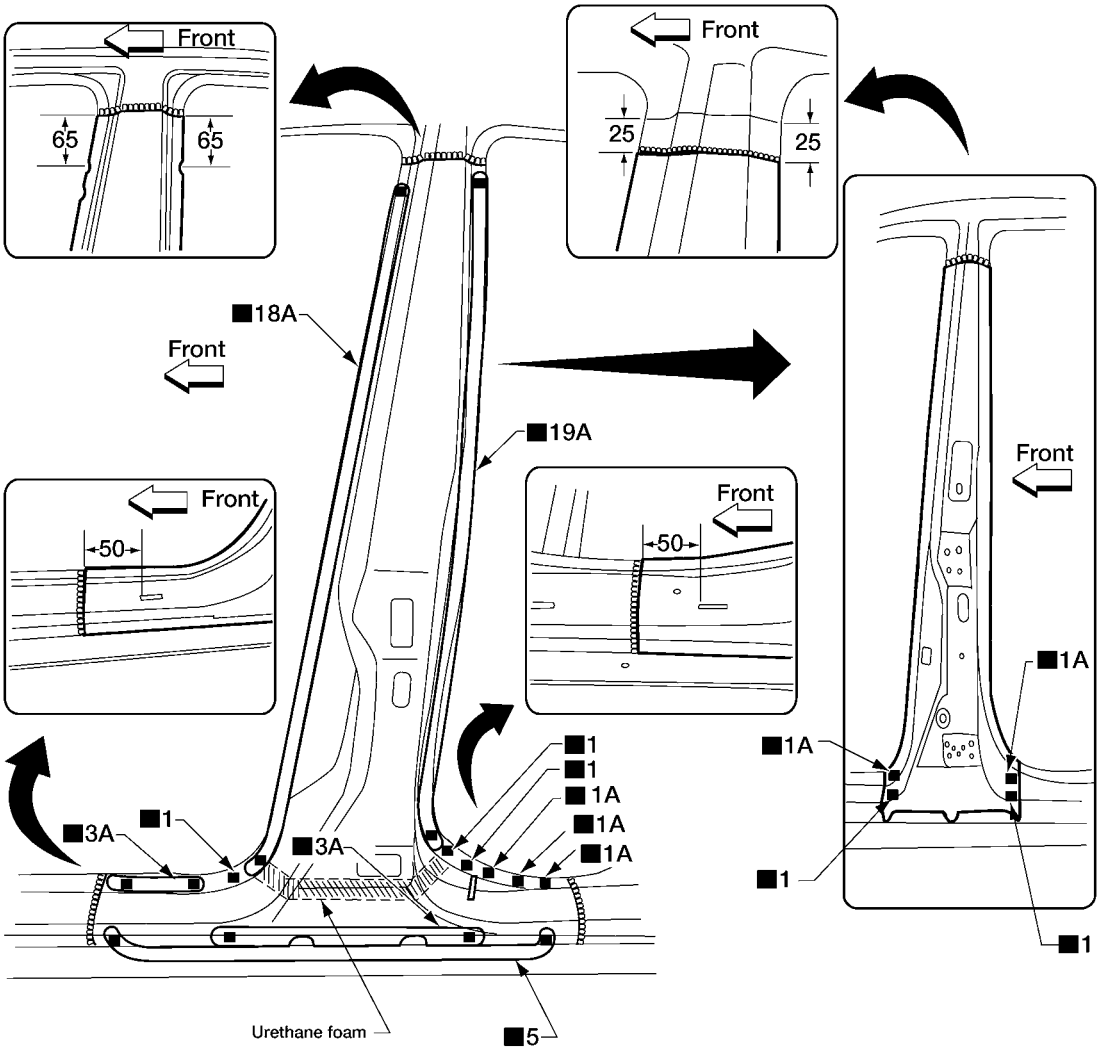

Unit : mm

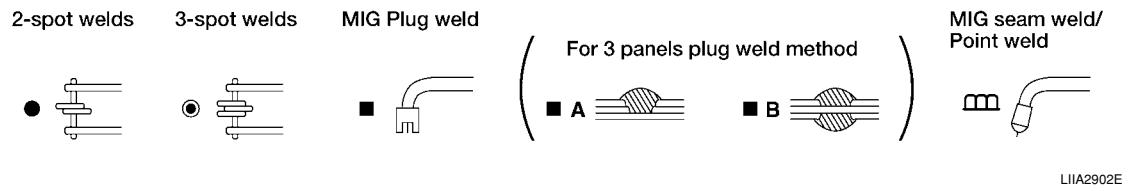

Change parts

- Center pillar portion of side body
- Lower portion of center pillar reinforcement

Inner

Work after outer sill reinforcement has been removed.

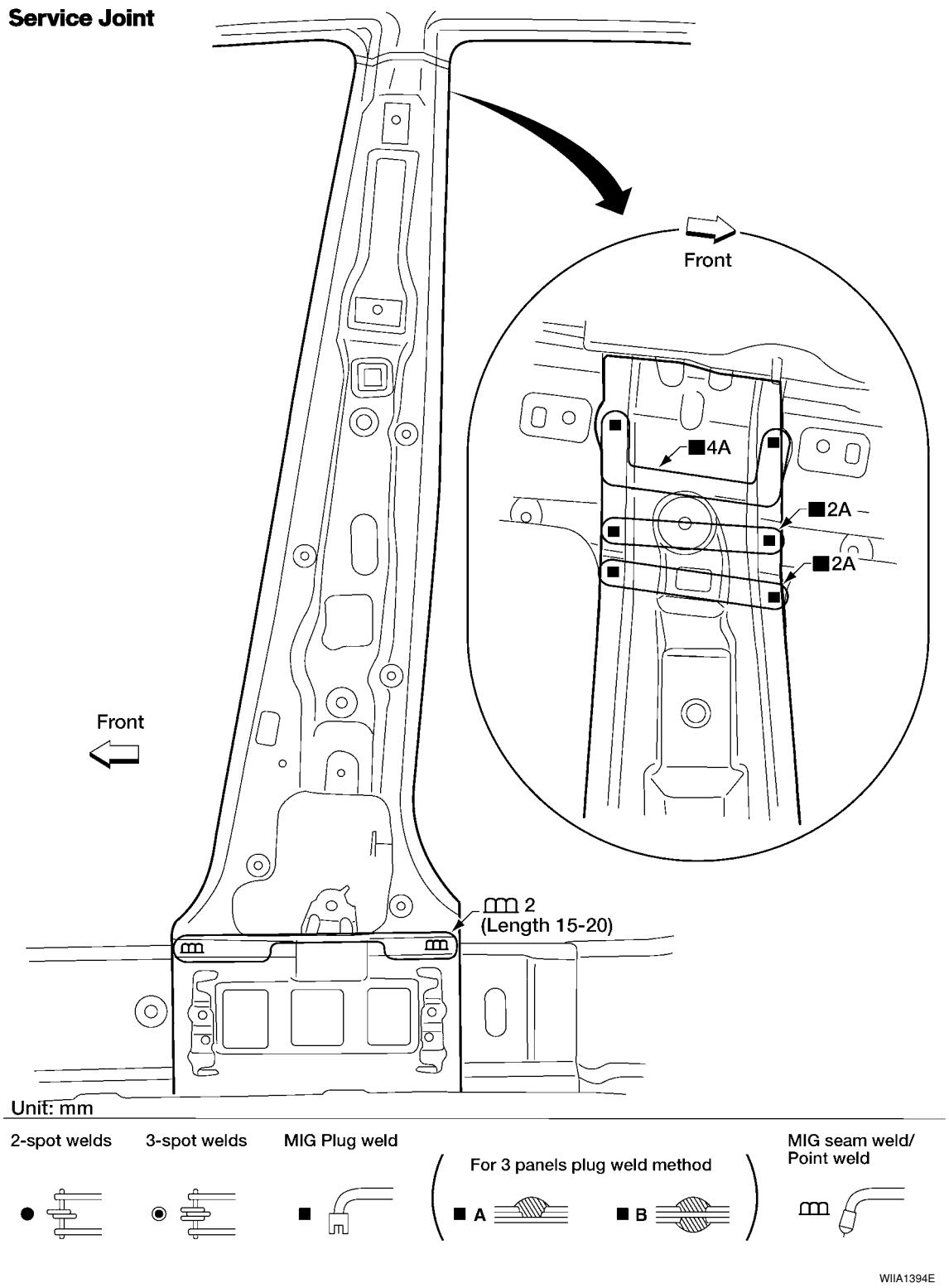

Change parts

- Inner center pillar

OUTER SILL

Service Joint

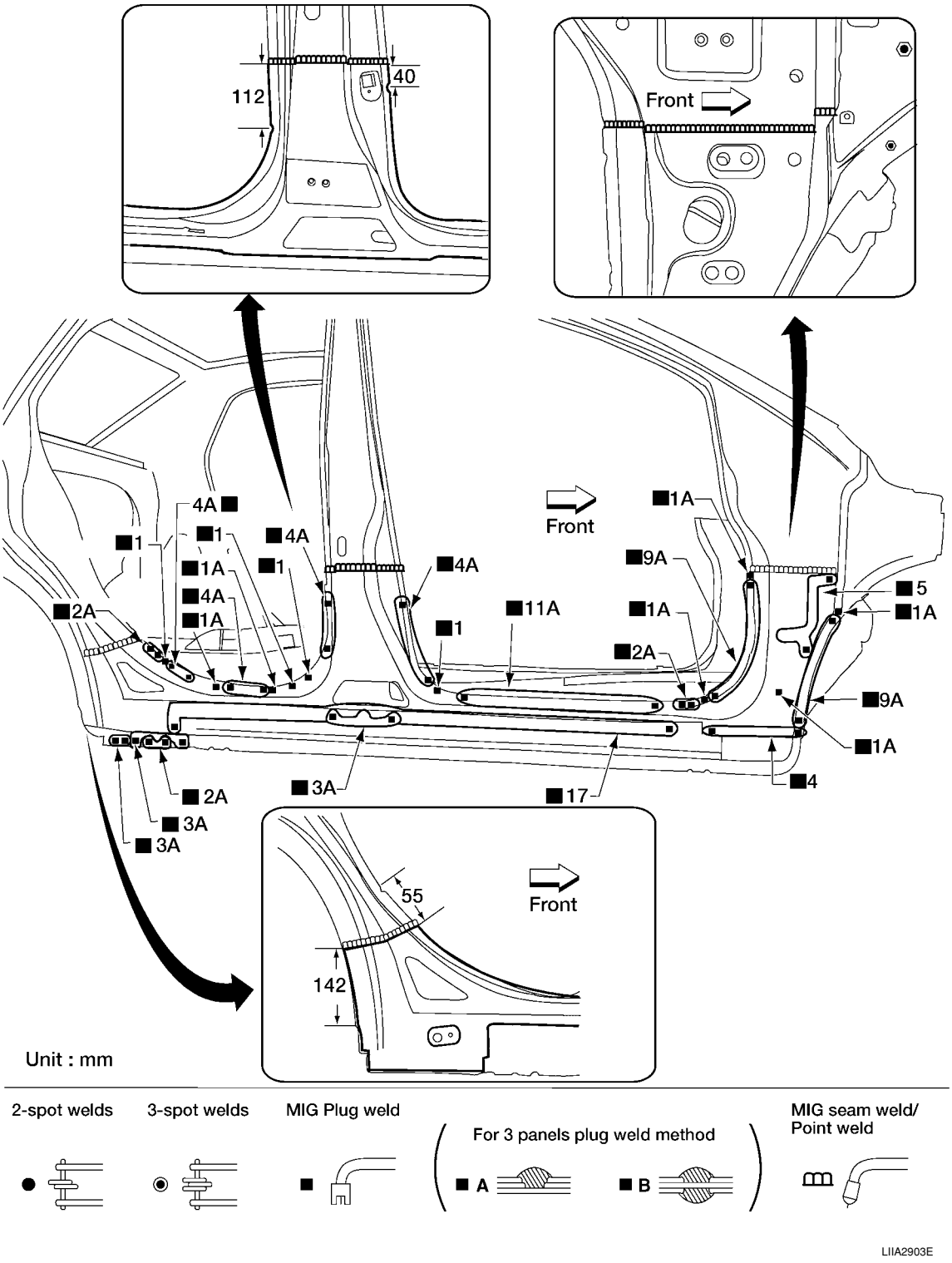

Change parts

- Outer sill

OUTER SILL REINFORCEMENT

- Work with front pillar lower reinforcement, inner center pillar, and outer sill removed.

Service Joint

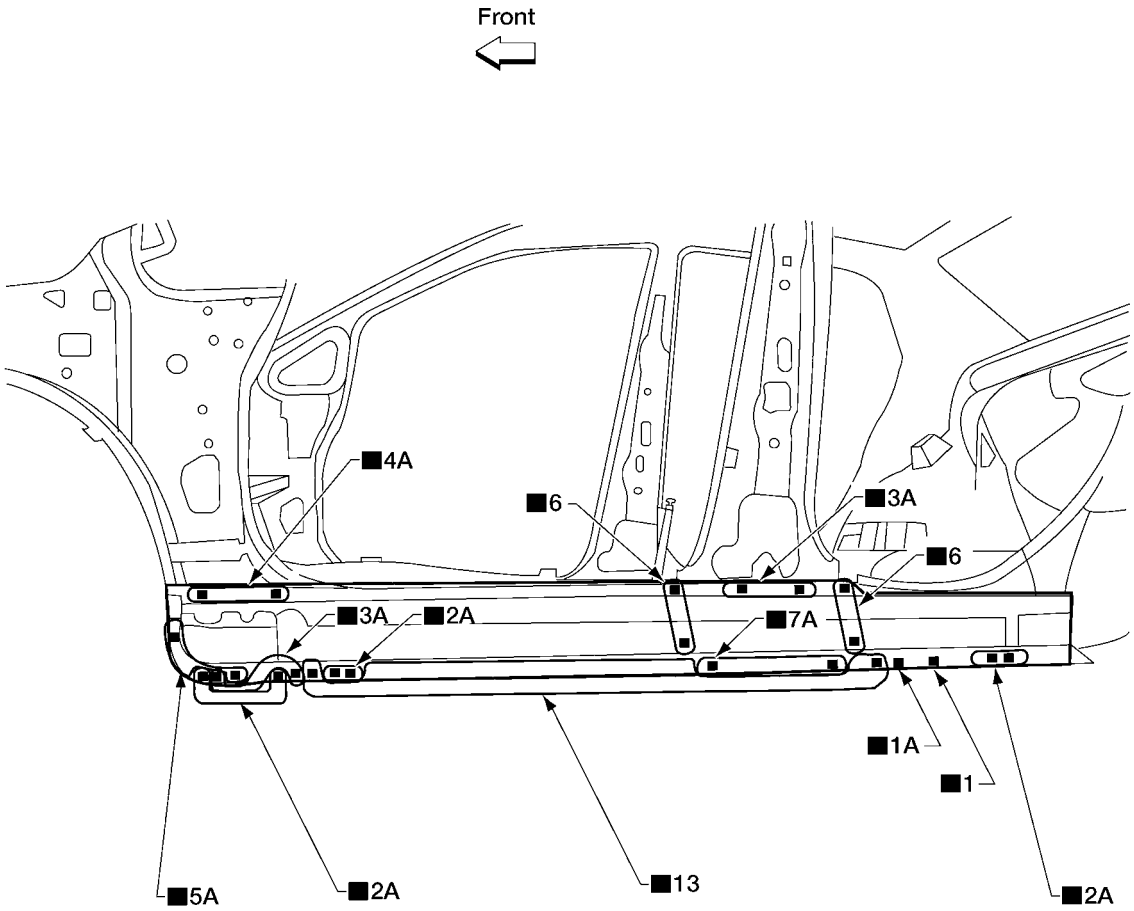

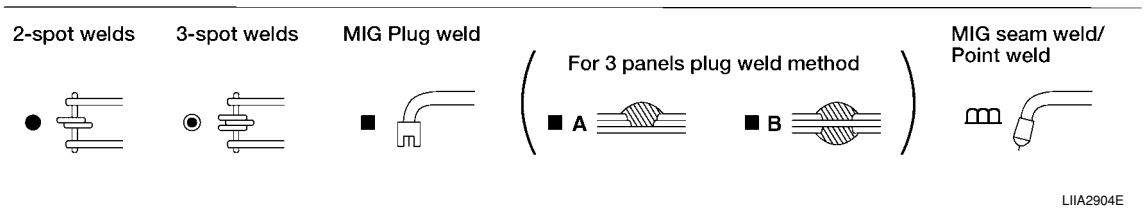

Change parts

- Outer sill reinforcement

REAR FENDER

Hatchback

Service Joint

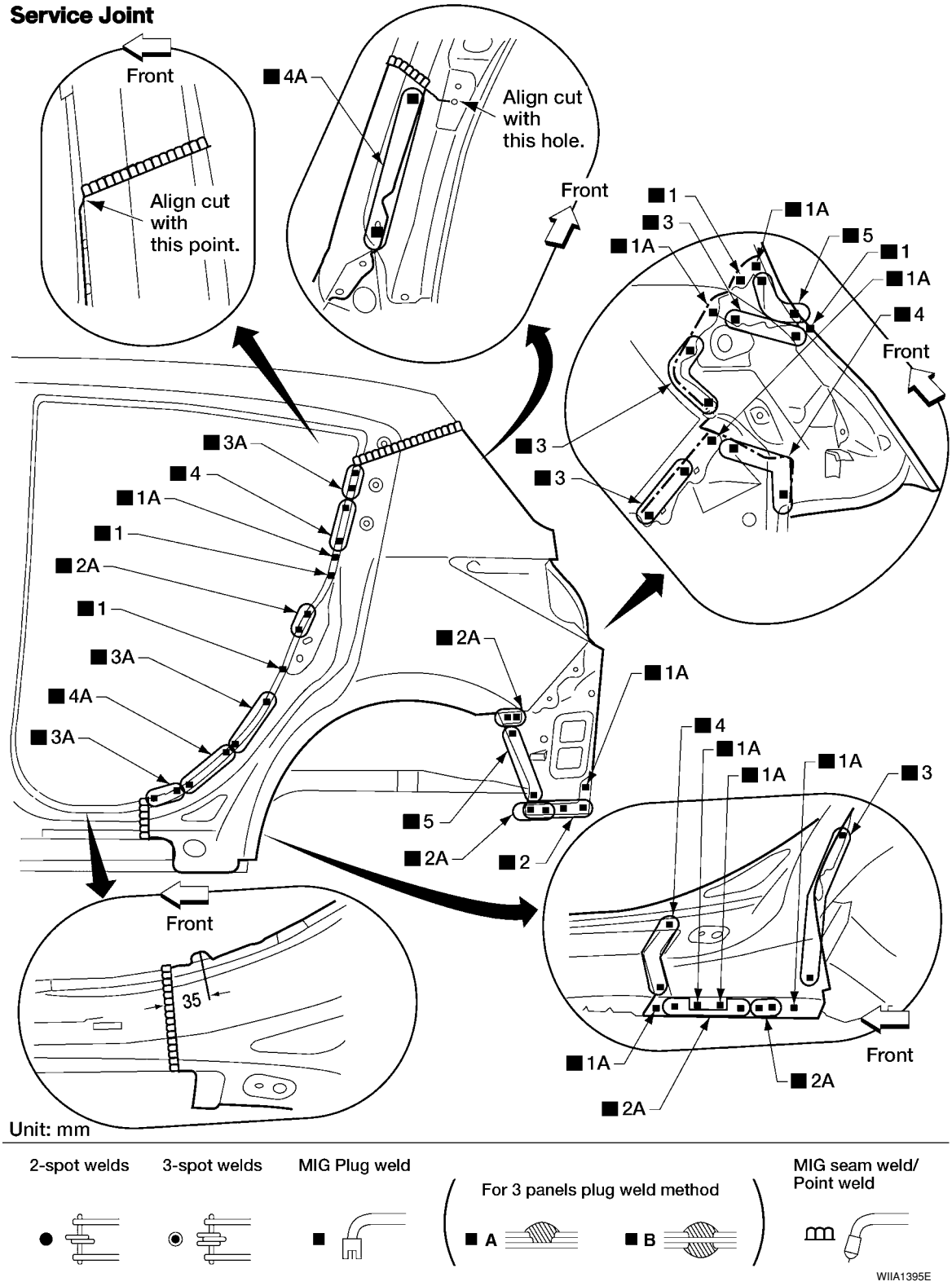

Change parts

- Rear fender
- Rear fender corner
- Rear combination lamp base

Sedan

Service Joint

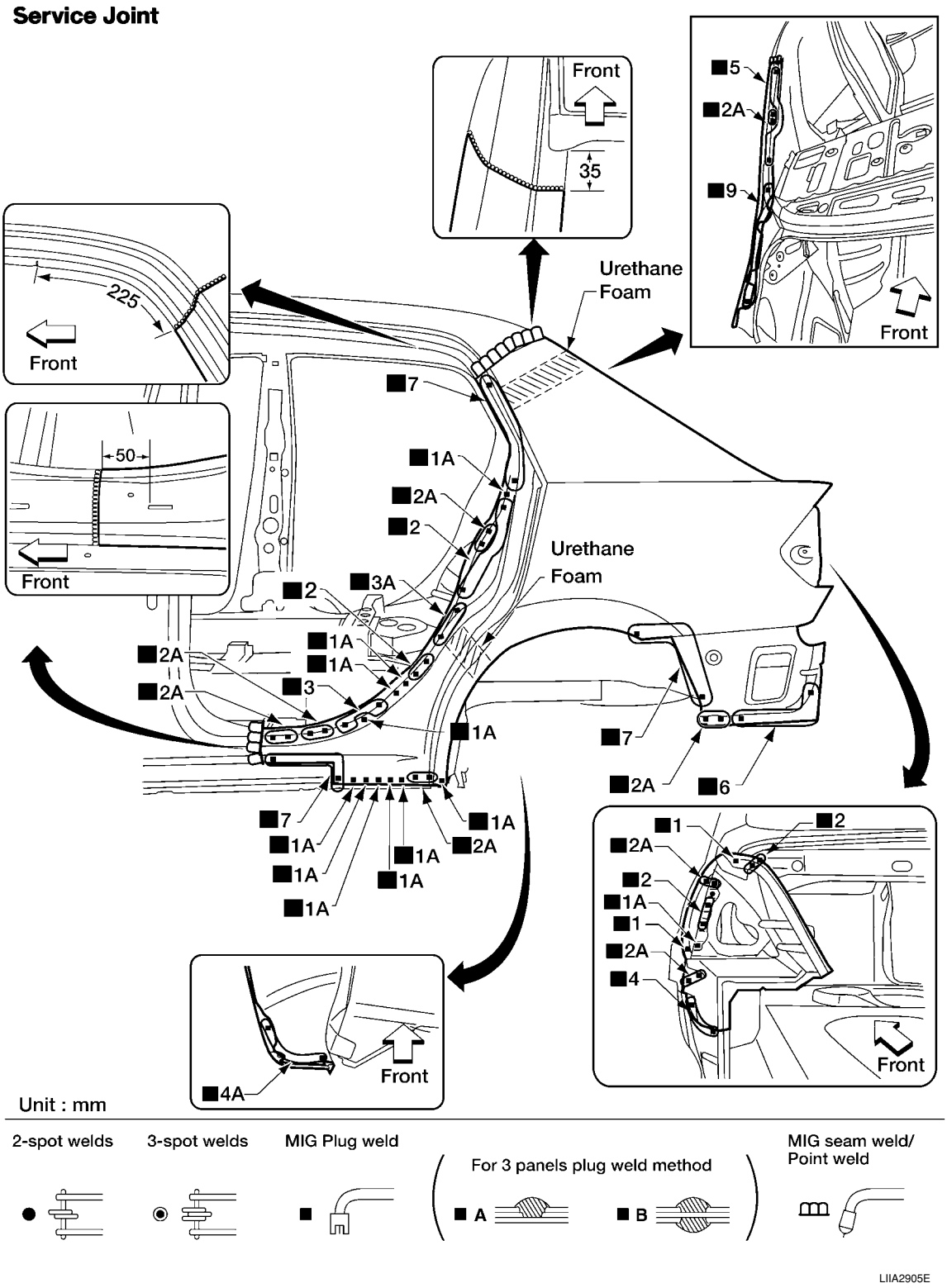

Change parts

- Rear fender
- Rear fender corner
- Rear combination lamp base

REAR PANEL

Hatchback

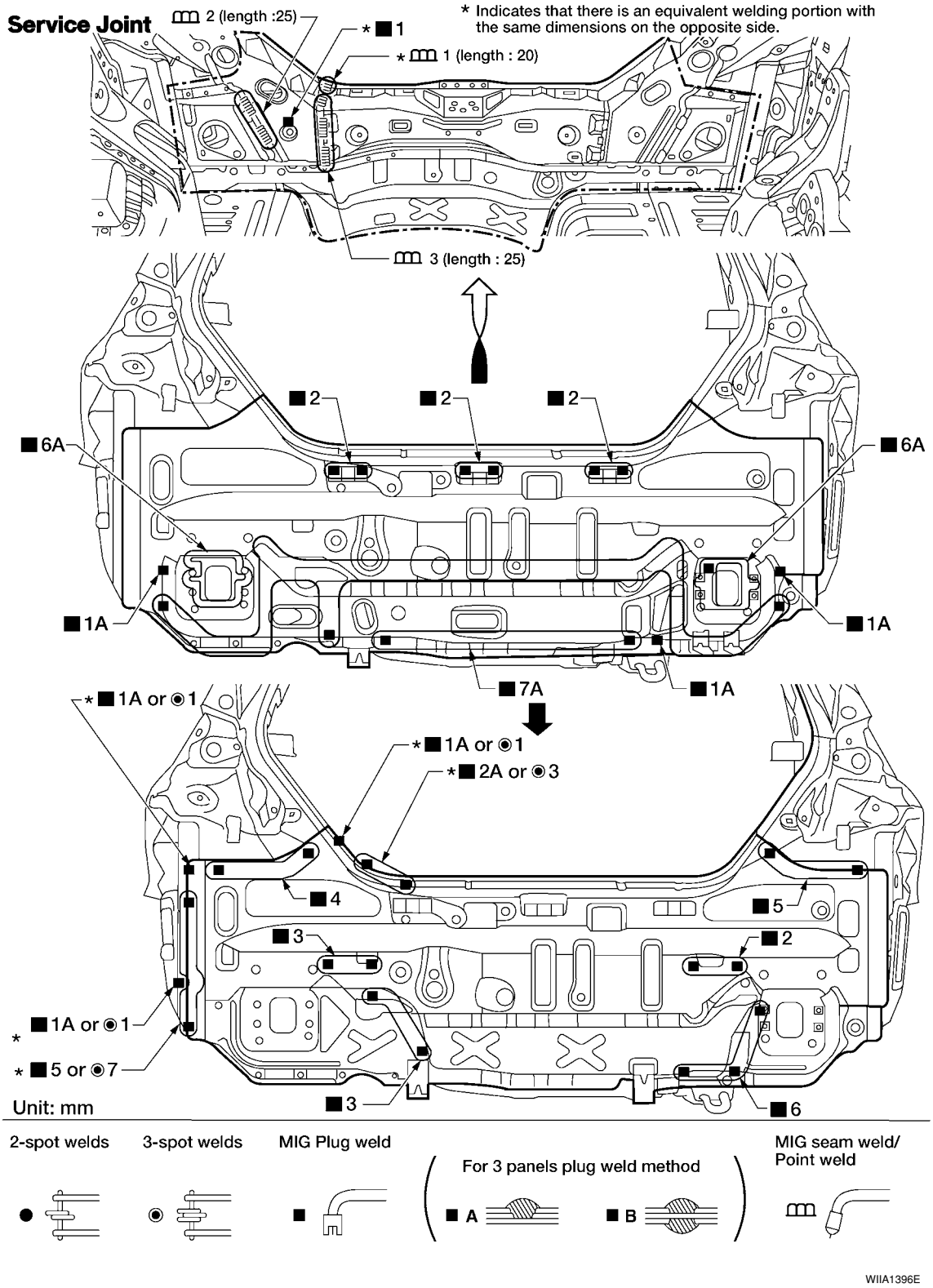

Change parts

- Rear end crossmember
- Rear panel assembly
- Rear bumper fascia brackets

Sedan

Service Joint

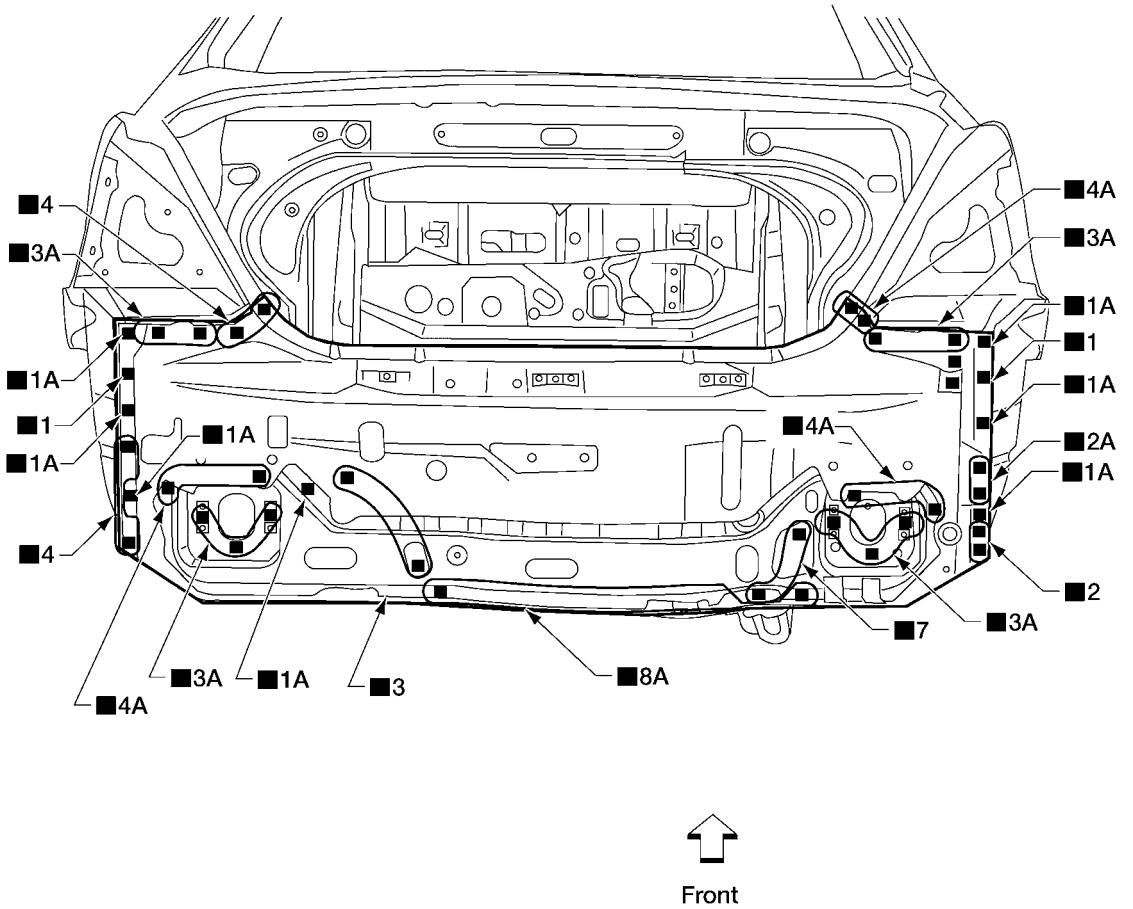

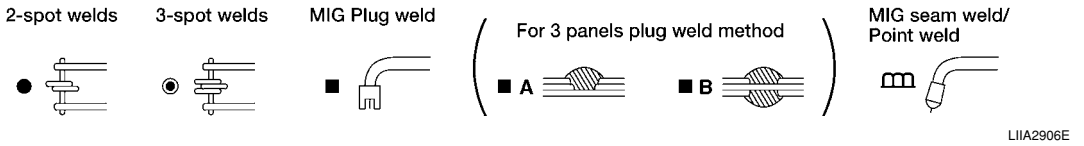

Change parts

- Rear end crossmember
- Rear panel assembly
- Rear bumper fascia brackets

REAR FLOOR REAR

• Work after rear panel assembly has been removed.

Hatchback

Service Joint

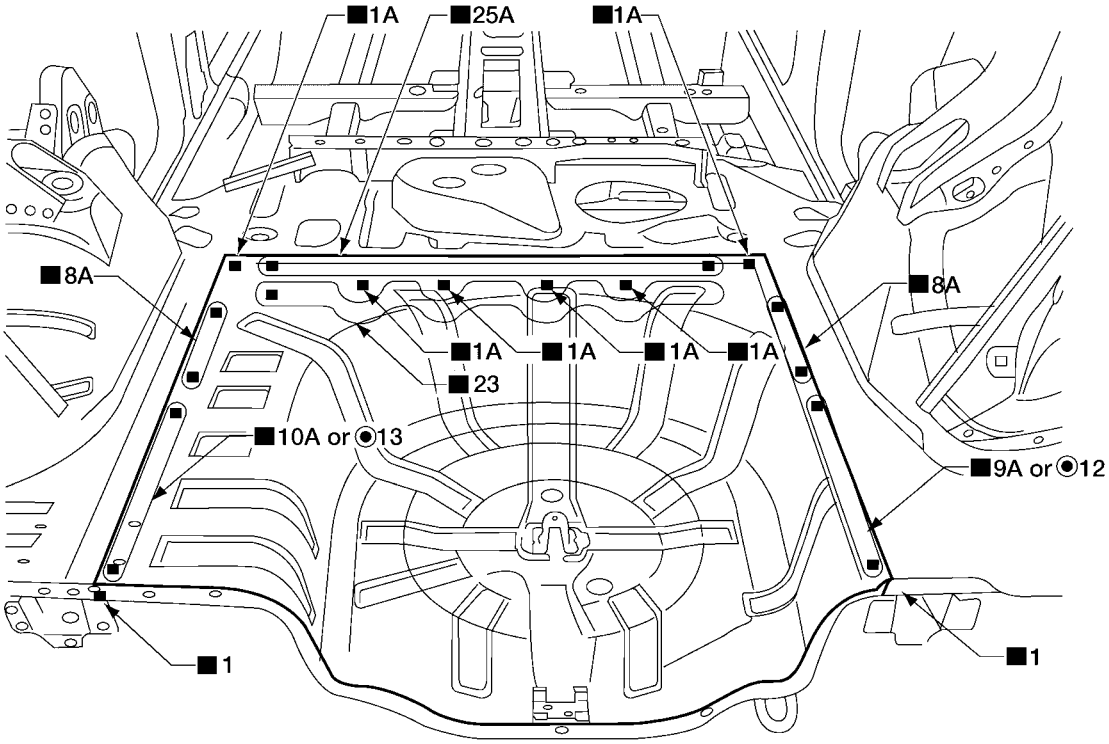

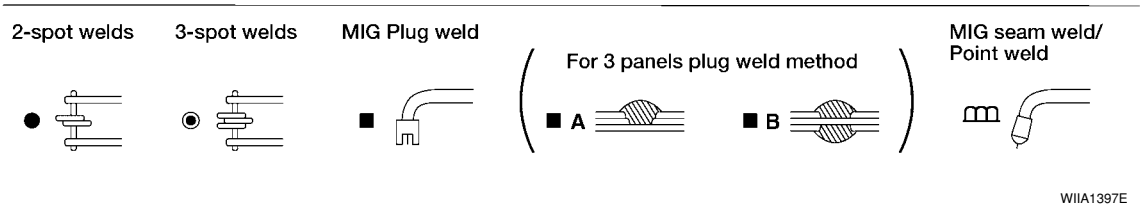

Change parts

- ● Rear floor rear

Sedan

Service Joint

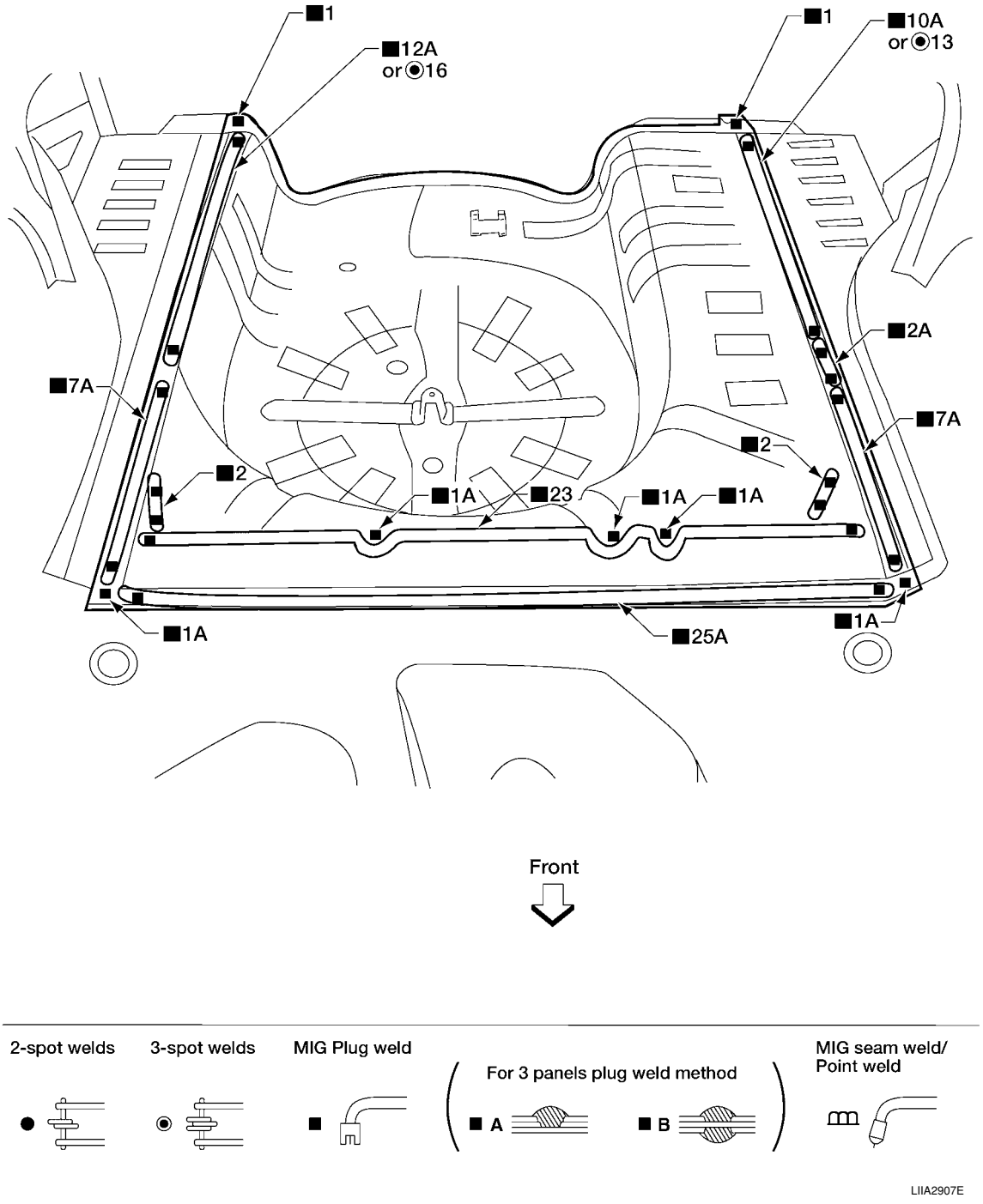

Change parts

- ● Rear floor rear

REAR SIDE MEMBER EXTENSION

Hatchback

- Work after rear panel assembly and rear floor rear have been removed.

Service Joint

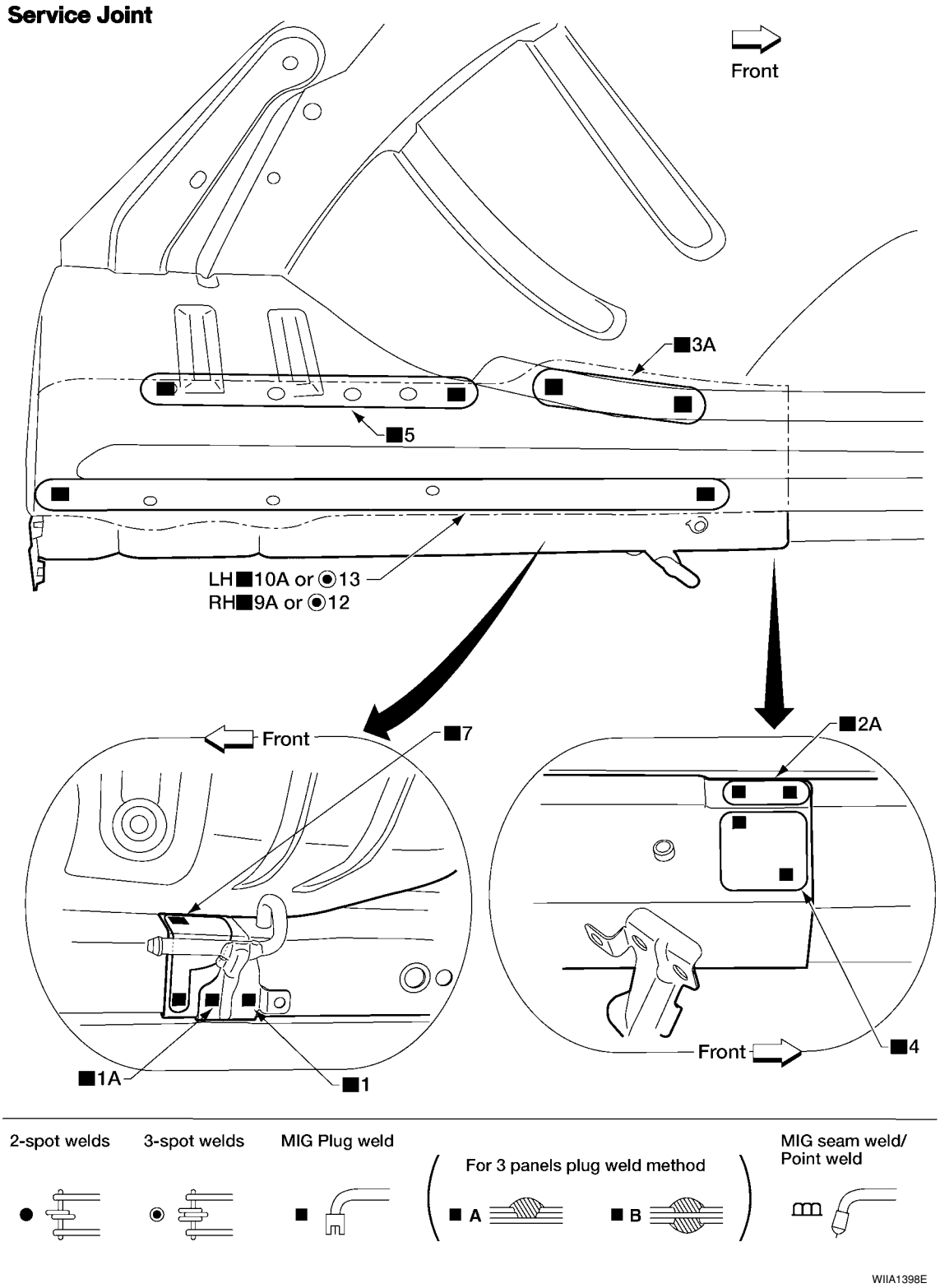

Change parts

- Rear side member extension

Sedan

Service Joint

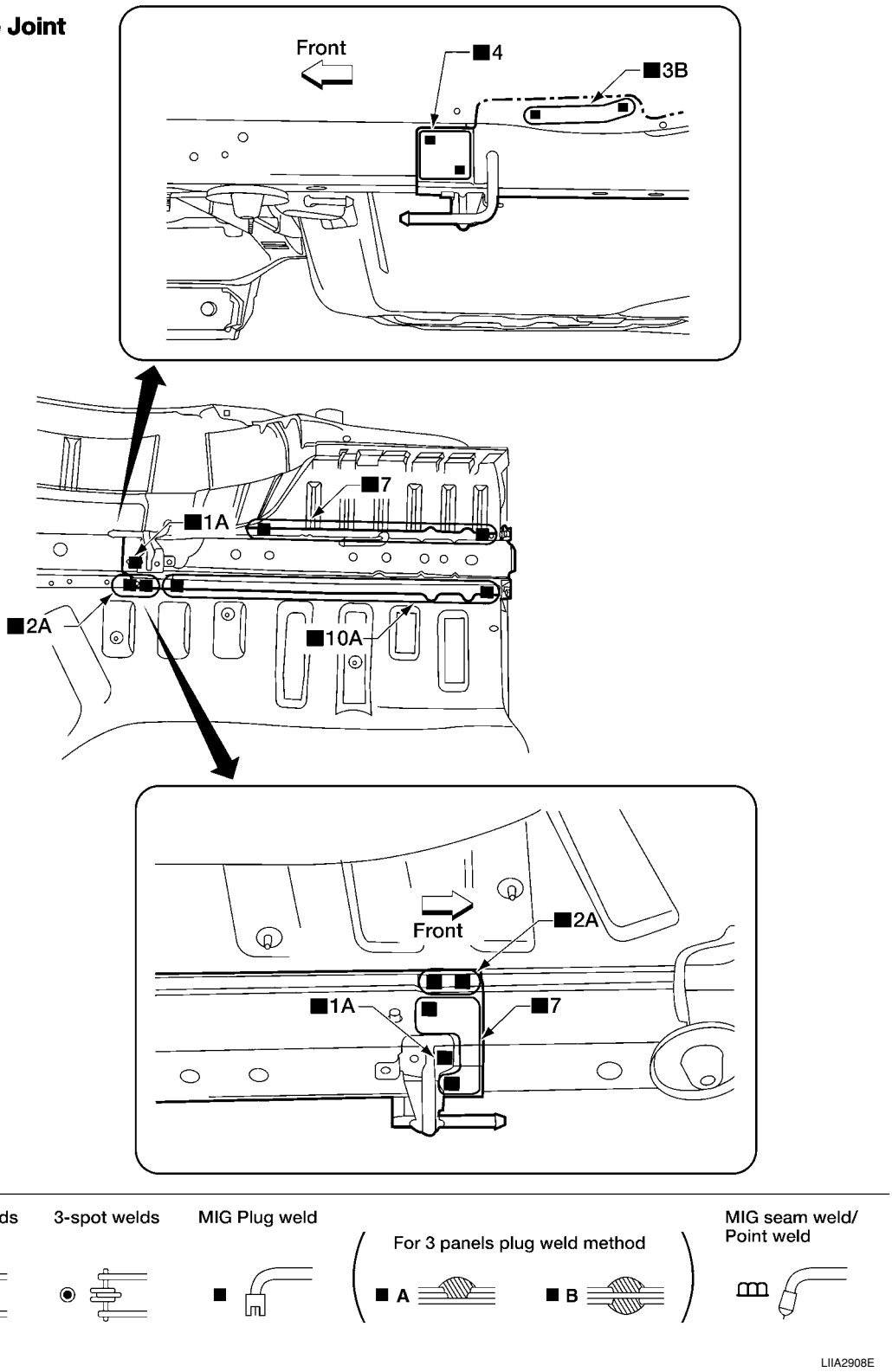

Change parts

- Rear side member extension

SECTION BR
BRAKE SYSTEM

CONTENTS

SERVICE INFORMATION 2

PRECAUTIONS 2
Precaution for Supplemental Restraint System (SRS) "AIR BAG" and "SEAT BELT PRE-TENSIONER" 2
Precaution for Brake System 2

PREPARATION 3
Commercial Service Tool 3

NOISE, VIBRATION AND HARSHNESS (NVH) TROUBLESHOOTING 4
NVH Troubleshooting Chart 4

BRAKE PEDAL 5
Inspection and Adjustment 5
Removal and Installation 6

BRAKE FLUID 8
On Board Inspection 8
Drain and Refill 8
Bleeding Brake System 8

BRAKE TUBE AND HOSE 10
Hydraulic Circuit 10
Front Brake Tube and Hose 10
Rear Brake Tube and Hose 11
Inspection After Installation 11

BRAKE MASTER CYLINDER 13
On-Board Inspection 13
Removal and Installation 13
Disassembly and Assembly 13

BRAKE BOOSTER 18
On Board Inspection 18
Removal and Installation 18

VACUUM LINES 21
Component 21
Removal and Installation 21
Inspection 21

FRONT DISC BRAKE 23
On Board Inspection 23
Component 23
Removal and Installation of Brake Pad 24
Removal and Installation of Brake Caliper Assembly 25
Disassembly and Assembly of Brake Caliper Assembly 25
Brake Burnishing Procedure 28

REAR DRUM BRAKE 29
Component 29
Removal and Installation of Drum Brake Assembly 29
Removal and Installation of Wheel Cylinder 32
Disassembly and Assembly of Wheel Cylinder 32

SERVICE DATA AND SPECIFICATIONS (SDS) 33
General Specification 33
Brake Pedal 33
Check Valve 33
Brake Booster 33
Front Disc Brake 33
Rear Drum Brake 34

SERVICE INFORMATION

PRECAUTIONS

Precaution for Supplemental Restraint System (SRS) "AIR BAG" and "SEAT BELT PRE-TENSIONER"

INFOID:0000000001703775

The Supplemental Restraint System such as “AIR BAG” and “SEAT BELT PRE-TENSIONER”, used along with a front seat belt, helps to reduce the risk or severity of injury to the driver and front passenger for certain types of collision. This system includes seat belt switch inputs and dual stage front air bag modules. The SRS system uses the seat belt switches to determine the front air bag deployment, and may only deploy one front air bag, depending on the severity of a collision and whether the front occupants are belted or unbelted.
Information necessary to service the system safely is included in the SRS and SB section of this Service Manual.

WARNING:

- **To avoid rendering the SRS inoperative, which could increase the risk of personal injury or death in the event of a collision which would result in air bag inflation, all maintenance must be performed by an authorized NISSAN/INFINITI dealer.**
- **Improper maintenance, including incorrect removal and installation of the SRS, can lead to personal injury caused by unintentional activation of the system. For removal of Spiral Cable and Air Bag Module, see the SRS section.**
- **Do not use electrical test equipment on any circuit related to the SRS unless instructed to in this Service Manual. SRS wiring harnesses can be identified by yellow and/or orange harnesses or harness connectors.**

Precaution for Brake System

INFOID:0000000001703776

- Refill using recommended brake fluid. Refer to MA-10.
- Never reuse drained brake fluid.
- Be careful not to splash brake fluid on painted surface of body. If brake fluid is splashed on painted surfaces of body immediately wipe it off with cloth and then wash it away with water.
- To clean or wash all parts of master cylinder, disc brake caliper and wheel cylinder, use new brake fluid.
- Never use mineral oils such as gasoline or kerosene. They will ruin rubber parts of the hydraulic system.
- Use a flare nut wrench when removing a brake tube and use a flare nut torque wrench when installing a brake tube.
- When installing brake tubes and hoses, be sure to check torque.
- Before working, turn ignition switch OFF and disconnect connectors of ABS actuator and electric unit (control unit) or the battery cable from the negative terminal.
- Burnish the new braking surfaces after refinishing or replacing drums or rotors, after replacing pads or linings, or if a soft pedal occurs at very low mileage. Refer to BR-28, "Brake Burnishing Procedure" .

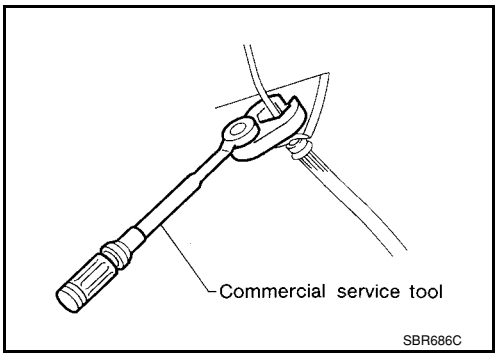

PREPARATION

Commercial Service Tool

INFOID:0000000001703777

Tool name	Description
1. Flare nut crowfoot 2. Torque wrench 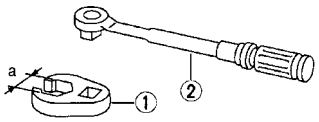 S-NT360	Removing and installing brake piping **a: 10 mm (0.39 in)/12 mm (0.47 in)**
Pin punch Tip diameter: 4 mm (0.16 in) dia. ZZA0515D	Removing and installing reservoir tank pin

NOISE, VIBRATION AND HARSHNESS (NVH) TROUBLESHOOTING

NVH Troubleshooting Chart

INFOID:0000000001703778

Use the chart below to help you find the cause of the symptom. If necessary, repair or replace these parts.

Reference page		BR-23, BR-29	BR-23, BR-29	BR-23	BR-25, BR-29	BR-25, BR-29	BR-25, BR-29	BR-25, BR-29	BR-25, BR-29	—	BR-25, BR-29	BR-29	FAX-4, "NVH Troubleshooting Chart"	MT-7, "NVH Troubleshooting Chart"	FSU-5, "NVH Troubleshooting Chart"	WT-4, "NVH Troubleshooting Chart"	WT-4, "NVH Troubleshooting Chart"	FAX-4, "NVH Troubleshooting Chart"	PS-5, "NVH Troubleshooting Chart"
Possible cause and SUSPECTED PARTS		Pads/Lining damaged	Pads/Lining - uneven wear	Shims damaged	Rotor imbalance	Rotor damage	Rotor runout	Rotor deformation	Rotor deflection	Rotor rust	Rotor thickness variation	Drum out of round	WHEEL HUB	DIFFERENTIAL	SUSPENSION	TIRES	ROAD WHEEL	DRIVE SHAFT	STEERING
Symptom	Noise	×	×	×									×	×	×	×	×	×	×
	Shake				×								×		×	×	×	×	×
	Shimmy, Shudder				×	×	×	×	×	×	×	×			×	×	×		×

×: Applicable

BRAKE PEDAL

Inspection and Adjustment

INFOID:0000000001703779

PLAY AND CLEARANCE BETWEEN BRAKE PEDAL AND FLOOR PANEL WITH PEDAL DEPRESSED

- Check brake pedal play.
- Check brake pedal free height from dash lower panel (1).
- Make an adjustment to the following dimension if value is outside the standard.

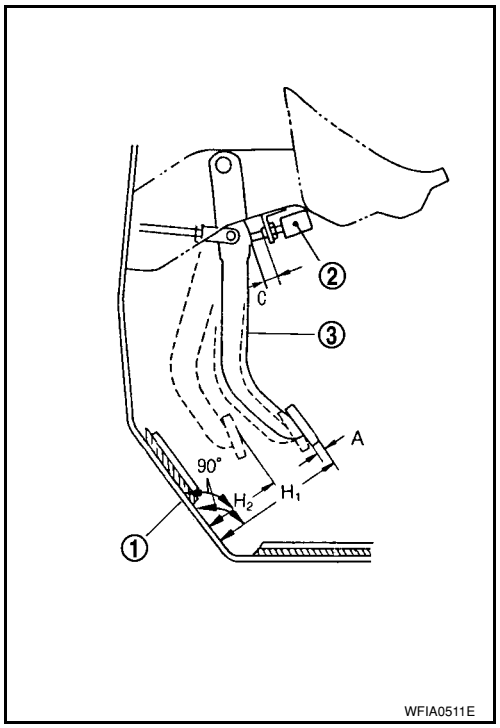

H1	**Brake pedal free height (from dash panel top surface)**	**A/T, CVT models**	**172.4 - 182.4 mm (6.79 - 7.18 in)**
		M/T model	**162.3 - 172.3 mm (6.39 - 6.78 in)**
H2	**Brake pedal depressed height (under a force of 490 N (50 kg-f, 110 lb-f) with the engine running)**	**A/T, CVT models**	**98 mm (3.86 in) or more**
		M/T model	**90 mm (3.54 in) or more**
C	**Clearance between the threaded end of stop lamp switch (2) and brake pedal lever (3).**		**0.74 - 1.96 mm (0.0291 - 0.0772 in)**
A	**Pedal play**		**3 - 11 mm (0.12 - 0.43 in)**

ADJUSTMENT

1. Loosen stop lamp switch by rotating it counterclockwise by 45°.
2. Loosen lock nut on input rod, then rotate input rod to set pedal to the specified height, and tighten lock nut.
   CAUTION:
   Make sure that the threaded end of input rod stays inside clevis.

   Lock nut : Refer to BR-18, "Removal and Installation" .
3. With the pedal pulled and held by hand, press stop lamp switch until its threaded end contacts brake pedal lever.
4. With the threaded end of stop lamp switch contacting brake pedal lever, rotate the switch clockwise by 45° to secure.
   CAUTION:
   Make sure that the clearance (C) is within the standard. Refer to "Inspection and Adjustment" .
5. Check the pedal play.
   CAUTION:
   Make sure that stop lamps go off when brake pedal is released.
6. Start engine to check brake pedal depressed height. Refer to "Inspection and Adjustment" .

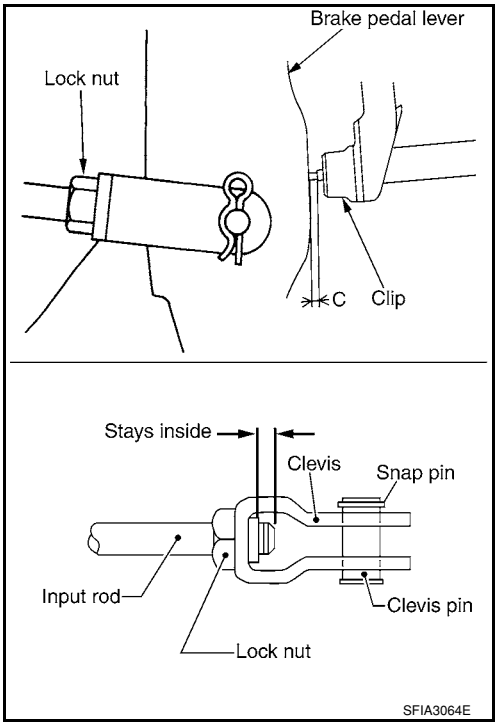

Removal and Installation

INFOID:0000000001703780

COMPONENTS

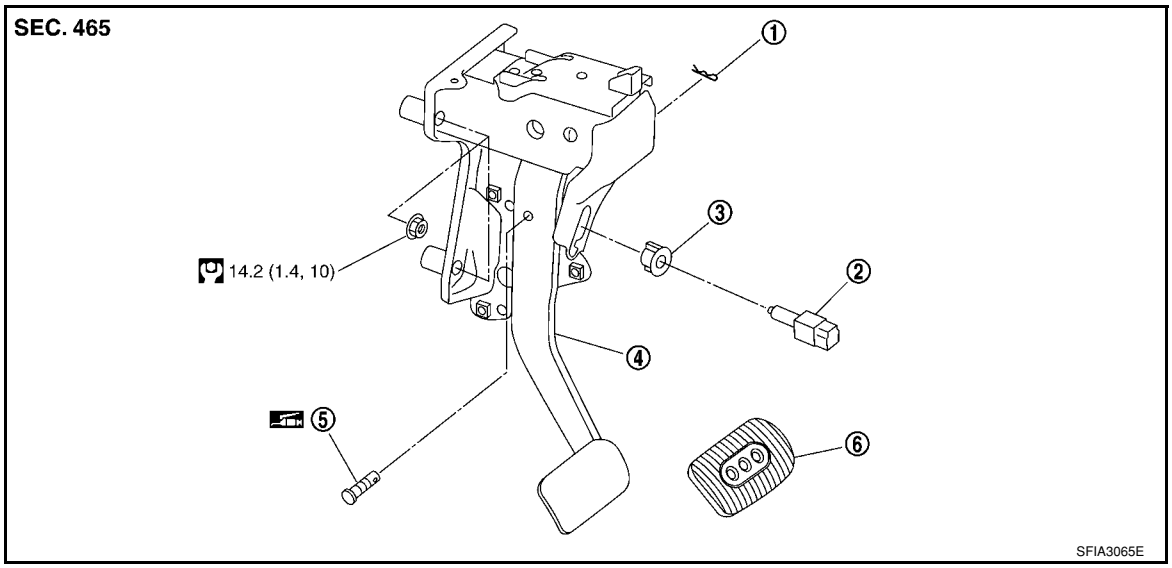

1. Snap pin	2. Stop lamp switch	3. Clip
4. Brake pedal assembly	5. Clevis	6. Brake pedal pad

REMOVAL

1. Disconnect accelerator pedal position sensor harness connector.
2. Remove stop lamp switch from brake pedal assembly.
3. Remove snap pin and clevis pin from clevis of brake booster.
4. Remove nuts from brake pedal bracket, and remove brake pedal assembly from vehicle.
5. Remove accelerator pedal from brake pedal assembly.

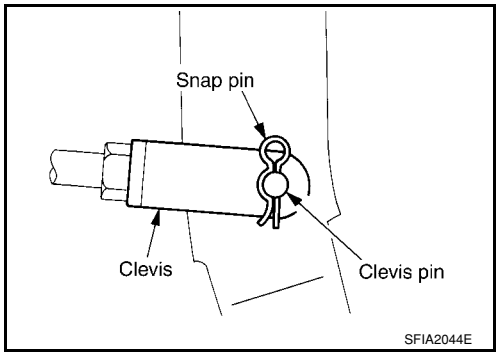

INSPECTION AFTER REMOVAL

- Check brake pedal upper rivet for deformation.
- Make sure that the lapping length of sub-bracket and slide plate is at least 6.9 mm (0.272 in).
- Check brake pedal for bend, damage, and cracks on the welded parts.
- Replace brake pedal assembly if any non-standard condition is detected.

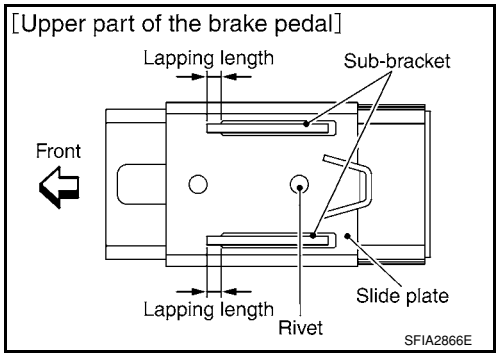

- Check clevis pin and plastic stopper for damage and deformation. Replace clevis pin as necessary.

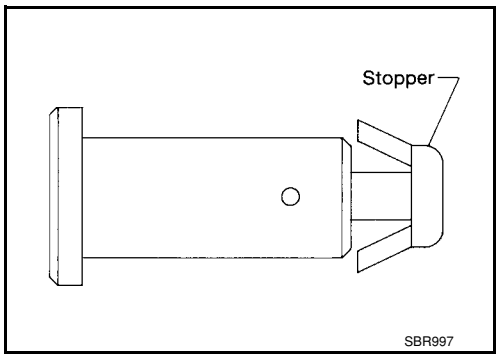

INSTALLATION

Installation is in the reverse order of the removal.

- After installing brake pedal assembly to vehicle, adjust brake pedal. Refer to BR-5, "Inspection and Adjustment" .
- After installing accelerator pedal, check accelerator pedal. Refer to ACC-3, "Removal and Installation" .

BRAKE FLUID

On Board Inspection

INFOID:0000000001703781

CHECKING BRAKE FLUID LEVEL

- Make sure the fluid level in the reservoir tank is within the standard (between MAX and MIN lines).
- Visually check around the reservoir tank for fluid leakage.
- If fluid level is excessively low, check brake system for fluid leakage.
- Release parking brake lever and see if brake warning lamp goes off. If not, check brake system for fluid leakage.

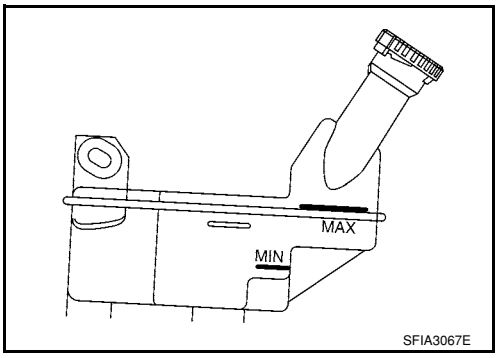

Drain and Refill

INFOID:0000000001703782

CAUTION:

- **Refill using recommended brake fluid. Refer to MA-10.**
- **Never reuse drained brake fluid.**
- **Be careful not to splash brake fluid on painted areas; it may cause paint damage. If brake fluid is splashed on painted areas, immediately wipe them with cloth and wash it away with water.**
- **Before working, disconnect connectors of ABS actuator and electric unit (control unit) or battery cable from the negative terminal.**

1. Connect a vinyl tube to bleed valve.
2. Depress the brake pedal, loosen the bleed valve, and gradually remove the brake fluid.

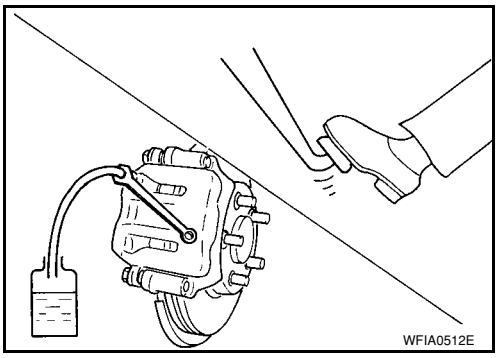

3. Clean inside of reservoir tank, and refill with new brake fluid.
4. Loosen bleed valve, depress brake pedal slowly to full stroke and then release it. Repeat the procedure every 2 or 3 seconds until the new brake fluid comes out, then close the bleed valve while depressing the brake pedal. Repeat the same procedure for each wheel.
5. Bleed air. Refer to BR-8, "Bleeding Brake System" .

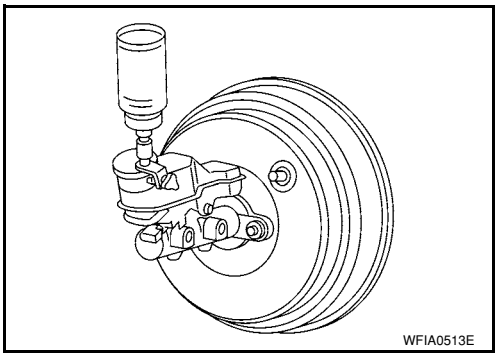

Bleeding Brake System

INFOID:0000000001703783

CAUTION:

- **While bleeding, pay attention to master cylinder fluid level.**
- **Before working, disconnect connectors of ABS actuator and electric unit (control unit) or the battery cable from the negative terminal.**

1. Connect a vinyl tube to the rear right bleed valve.
2. Fully depress brake pedal 4 to 5 times.

3. With brake pedal depressed, loosen bleed valve to let the air out, and then tighten it immediately.
4. Repeat steps 2, 3 until no more air comes out.
5. Tighten bleed valve to specified torque. Refer to BR-23, "Component" (front disc brake), BR-29, "Component" (rear drum brake).
6. Following the steps 1 to 5 above, with master cylinder reservoir tank filled at least half way, bleed air from the rear right, front left, rear left, and front right brake, in that order.

BRAKE TUBE AND HOSE

Hydraulic Circuit

INFOID:0000000001703784

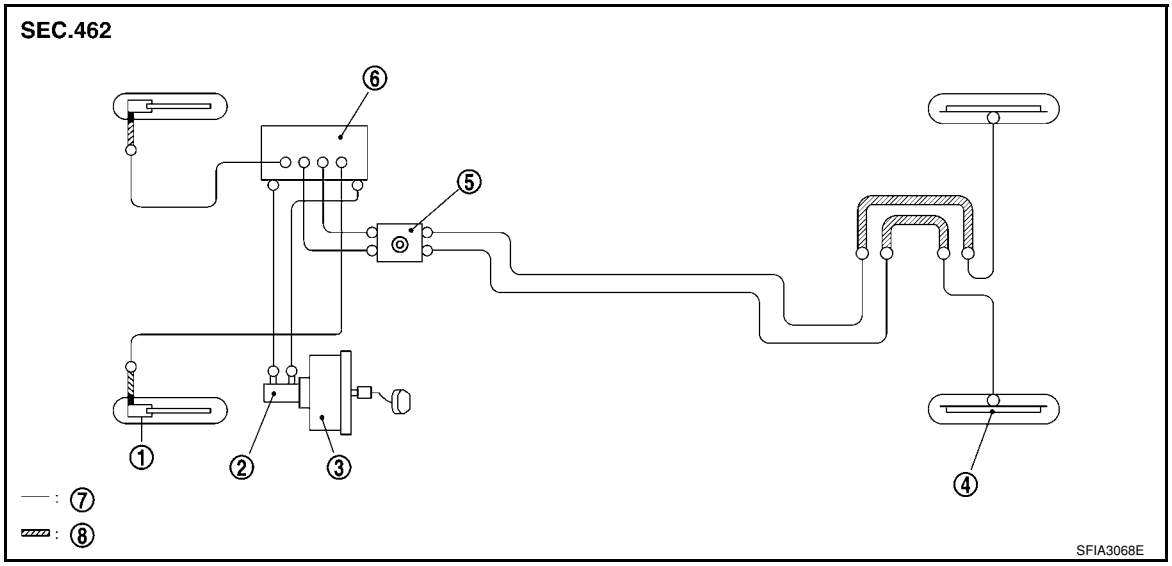

1.	Front disc brake	2.	Brake master cylinder	3.	Brake booster
4.	Rear drum brake	5.	Connector	6.	ABS actuator and electric unit (control unit)
7.	Brake tube	8.	Brake hose		
■:	Union bolt 18.2 N.m (1.9 kg-m, 13.0 ft-lb)	◎:	Connector bolt 10.0 N.m (1.0 kg-m, 87.0 in-lb)	○:	Flare nut 16.2 N.m (1.7 kg-m, 12.0 ft-lb)

CAUTION:
- **All tubes and hoses must be free from excessive bending, twisting and pulling.**
- **Make sure there is no interference with other parts when turning steering both clockwise and counterclockwise.**
- **Brake tubes and hoses are an important safety part. Always disassemble the parts and retighten their fittings, if a brake fluid leak is detected. Replace applicable part with a new one, if damaged part is detected.**
- **Be careful not to splash brake fluid on painted areas; it way cause paint damage. If brake fluid is splashed on painted surfaces of body, immediately wipe them with cloth and then wash it away with water.**
- **Do not bend or twist brake hose sharply, or strongly pull it.**
- **When removing components, cover brake line connections so that dirt, dust, or other foreign matters do not get in.**
- **Refill using recommended brake fluid. Refer to MA-10.**
- **Never reuse drained brake fluid.**

Front Brake Tube and Hose

INFOID:0000000001703785

REMOVAL

1. Drain brake fluid. Refer to BR-8, "Drain and Refill" .
2. Using a flare nut wrench, remove brake tube from brake hose.
3. Remove union bolt, and remove brake hose from caliper assembly.
4. Remove lock plate, and remove brake hose from vehicle.

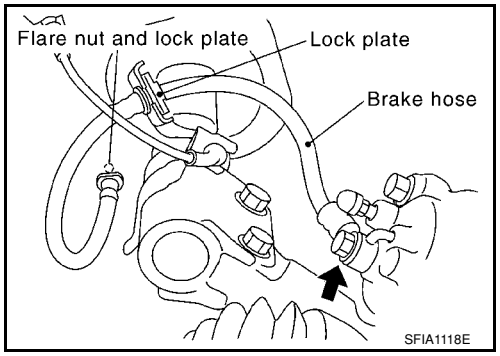

INSTALLATION

1. Assemble union bolt and copper washers to brake hose.
2. Position the L-shape metal fitting of the brake hose to the brake caliper assembly positioning hole.
3. Tighten union bolt to the specified torque. Refer to BR-10, "Hydraulic Circuit" .
4. Connect brake hose to brake tube on vehicle, and temporarily tighten flare nut by hand as much as possible.
5. Secure it with lock plate.
6. Tighten flare nut to the specified torque with a flare nut torque wrench. Refer to BR-10, "Hydraulic Circuit" .
7. Install brake hose to vehicle, and tighten nuts to the specified torque.
8. Bleed air from brake system. Refer to BR-8, "Bleeding Brake System" .

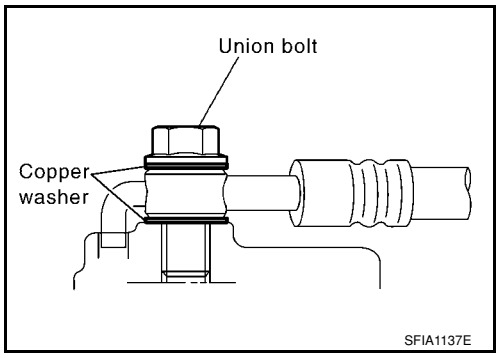

Rear Brake Tube and Hose

INFOID:0000000001703786

REMOVAL

1. Drain brake fluid. Refer to BR-8, "Drain and Refill" .
2. Using a flare nut wrench, remove brake tube from brake hose.
3. Remove lock plate, and remove brake hose from vehicle.

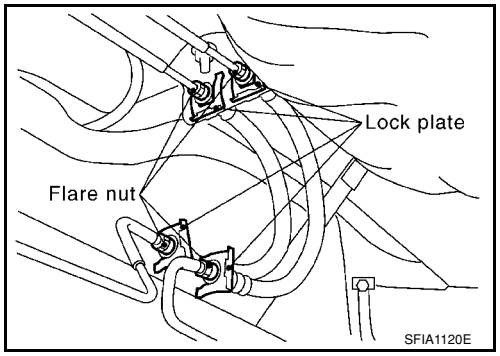

INSTALLATION

1. Connect brake hose to brake tube on vehicle, and temporarily tighten flare nut by hand as much as possible.
2. Secure it to bracket with lock plate.
3. Tighten flare nut to the specified torque with a flare nut torque wrench. Refer to BR-10, "Hydraulic Circuit" .
4. Bleed air from brake system. Refer to BR-8, "Bleeding Brake System" .

Inspection After Installation

INFOID:0000000001703787

CAUTION:

- **Always disassemble the parts and retighten their fittings, if a brake fluid leak is detected. Replace applicable part with a new one, if damaged part is detected.**
- **If leak is detected at the connections, retighten it or replace the damaged part.**

1. Check brake hose, tube, and connections for fluid leaks, damage, twist, deformation, contact with other parts, and loose connections.
2. While depressing pedal under a force of 785 N (80 kg-f, 177 lb-f) with the engine running for approximately 5 seconds, check for fluid leak from each part.

BRAKE MASTER CYLINDER

On-Board Inspection

INFOID:0000000001703788

LEAK INSPECTION

- Check for leaking in a master cylinder installation surface, a reservoir tank installation surface, and brake tube connections.

Removal and Installation

INFOID:0000000001703789

CAUTION:
Be careful not to splash brake fluid on painted areas; it may cause paint damage. If brake fluid is splashed on painted areas, immediately wipe them with cloth and wash it away with water.

REMOVAL

1. Drain brake fluid. Refer to BR-8, "Drain and Refill" .
2. Remove battery. Refer to SC-6, "Removal and Installation" .
3. Remove air duct. Refer to EM-16, "Removal and Installation" .
4. Remove air cleaner. Refer to EM-16, "Removal and Installation" .
5. Disconnect brake fluid level switch harness connector.
6. Using a flare nut wrench, remove brake tube from master cylinder.
7. Remove master cylinder assembly nuts, and remove master cylinder assembly from vehicle..

INSTALLATION

CAUTION:
- **Refill using recommended brake fluid. Refer to MA-10.**
- **Never reuse drained brake fluid.**
- **Check if the rod of primary piston has dust or scratches.**

1. Install master cylinder to brake booster assembly, and tighten nuts to the specified torque. Refer to BR-18, "Removal and Installation".
   CAUTION:
   - **Do not damage or strain rod of primary piston.**
   - **Apply silicone grease for O-ring, primary piston rod and to inside of booster.**

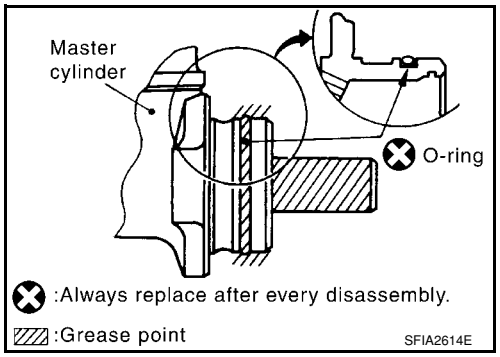

2. Install brake tube to master cylinder, and temporarily tighten the flare nuts on the brake tube to master cylinder by hand.
3. Install brake tube to brake hose, then tighten flare nut to the specified torque using a flare nut torque wrench. Refer to BR-10, "Hydraulic Circuit" .
4. Connect brake fluid level switch harness connector.
5. Refill new brake fluid and bleed air. Refer to BR-8, "Bleeding Brake System" .

Disassembly and Assembly

INFOID:0000000001703790

COMPONENTS

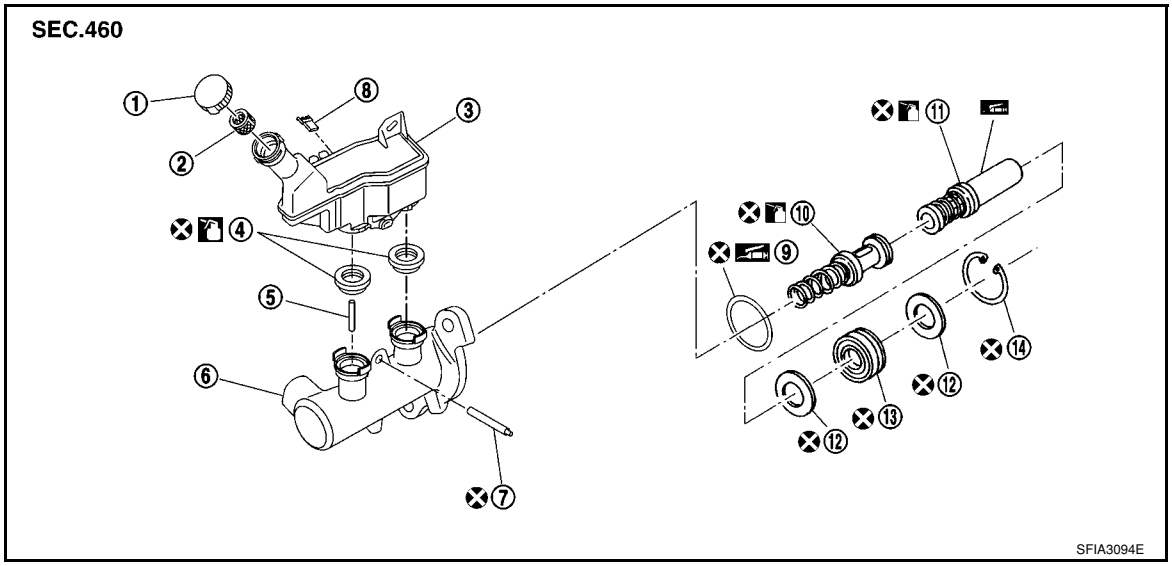

1.	Reservoir cap	2.	Oil filter	3.	Reservoir tank
4.	Grommet	5.	Piston stopper	6.	Cylinder body
7.	Pin	8.	Brake fluid level switch connector	9.	O-ring
10.	Secondary piston assembly	11.	Primary piston assembly	12.	Plate
13.	Guide assembly	14.	Snap ring		
:	PBC (Poly Butyl Cuprysil) grease or silicone-based grease	:	Brake fluid		

Refer to GI section GI-8, "Component" for symbol marks unless shown.

DISASSEMBLY

CAUTION:

While working, cover primary piston rod with cloth to prevent it from being damaged.

1. Secure flange of cylinder body in vise as shown.

   CAUTION:
   - **Use copper plate or cloth to cover flange when securing in vise.**
   - **When securing master cylinder assembly in a vise, be sure not to over-tighten.**

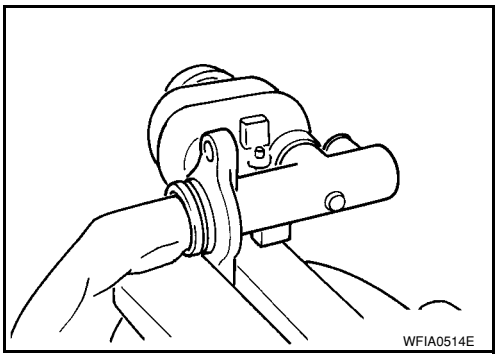

2. Using a pin-punch [commercial service tool: diameter approx. 4 mm (0.16 in)], remove pin from reservoir tank.
3. Remove master cylinder assembly from vise.
4. Remove reservoir tank and grommet from cylinder body.

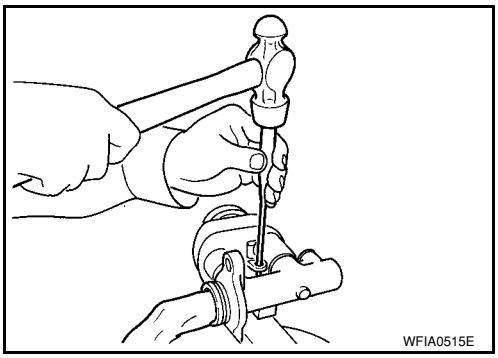

5. While pushing primary piston, remove piston stopper through secondary tank boss hole in the cylinder body.

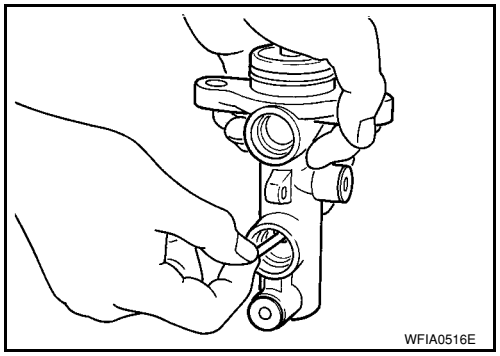

6. Remove snap ring with pushing primary piston.
   CAUTION:
   Be careful not to pop out piston.
7. Holding rod of primary piston, remove primary piston assembly, plate and guide assembly by pulling straight to prevent piston cup from being caught by the inner wall of cylinder.
8. Remove plate and guide assembly from primary piston.
   CAUTION:
   Be careful not to damage rod from the inner wall of plate.

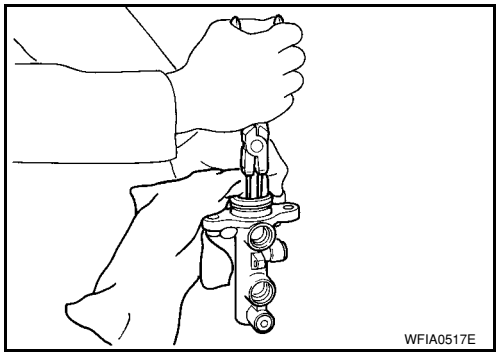

9. Tap flange using a soft block such as wood, and carefully pull secondary piston assembly straight out to prevent cylinder inner wall from being damaged.

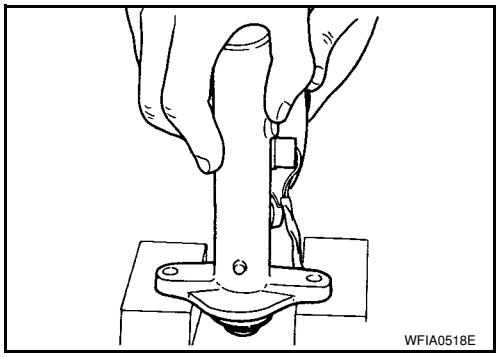

INSPECTION AFTER DISASSEMBLY

Cylinder Body

- Check the inner wall of cylinder for damage, wear, corrosion, and pin holes. Replace cylinder body if necessary.

ASSEMBLY

CAUTION:

- **Never use mineral oils such as kerosene or gasoline during the cleaning and assembly processes.**
- **Make sure that there is no foreign material such as dirt and dust on the inner wall of cylinder, piston, and piston cup. Be careful not to damage parts with a service tool when assembling.**
- **Do not drop parts. If a part is dropped, do not use it.**

1. Apply brake fluid to the inner wall of cylinder body, primary piston assembly and secondary piston assembly.
2. Insert secondary piston and primary piston assembly into cylinder body in this order.
   CAUTION:
   - **Pay attention to the orientation of piston cup, and insert straight to prevent cup from being caught by the inner wall of cylinder.**
   - **Always replace inner kit as a set.**

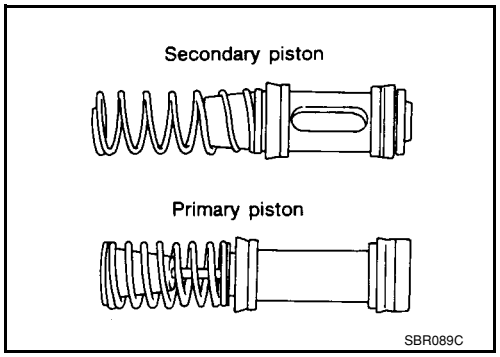

3. Set the slit of secondary piston towards the piston stopper mounting hole of cylinder body while pushing in the primary piston. Then install the piston stopper through the slit of secondary piston.

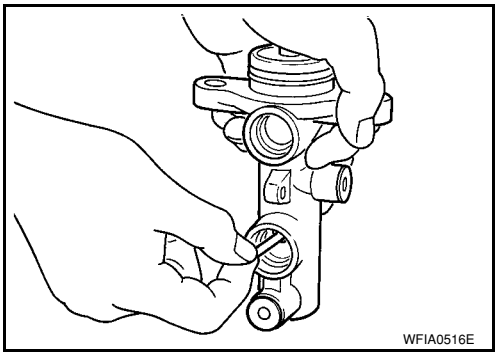

4. Insert plate and guide assembly into cylinder body.
   CAUTION:
   - **Be careful not to damage rod of primary piston.**
   - **Pay attention to the orientation of guide assembly.**
   - **Do not drop O-ring.**
   - **Be careful the guide and/or plate are not inserted at an angle to cylinder inner wall.**

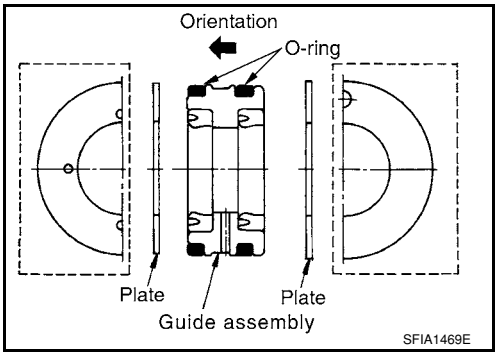

5. Be careful not to damage rod of primary piston with the cloth. Then insert snap ring to cylinder body while pushing primary piston.
   CAUTION:
   Make sure that snap ring is securely engaged in cylinder body inner diameter groove.

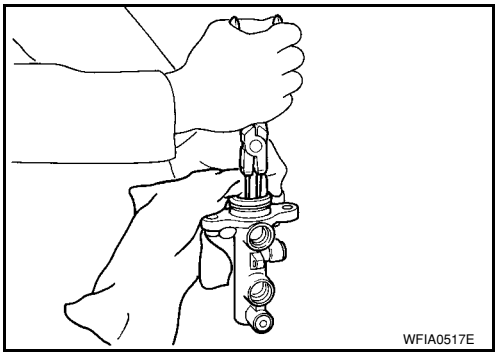

6. Apply brake fluid to a grommet, and press it into reservoir tank to install.

7. Install reservoir tank to cylinder body.
   CAUTION:
   Pay attention to the orientation of reservoir tank. Make sure reservoir tank is fully seated on master cylinder.

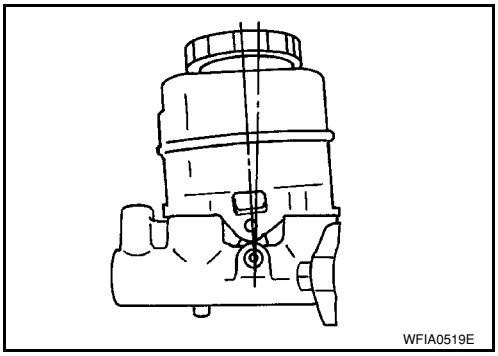

8. Secure flange of cylinder body in vise as shown.
   CAUTION:
   - **Use copper plate or cloth to cover flange for securing in the vise.**
   - **When securing master cylinder assembly in a vise, be sure not to over-tighten.**
   - **Be sure to secure the flange part with the brake tube installation side of cylinder body facing up (chamfered pin insert hole of cylinder body facing up).**

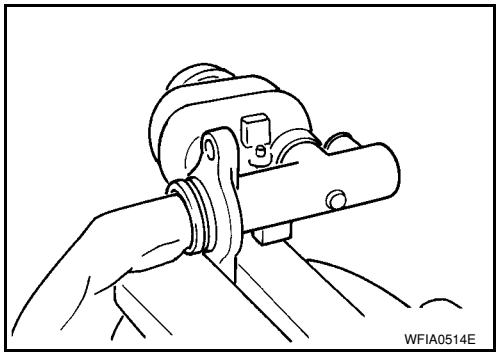

9. Using a pin punch [commercial service tool: diameter approx. 4 mm (0.16 in)], insert the reservoir tank pin into the pin hole.

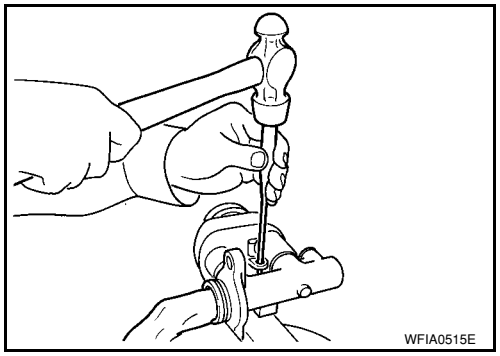

BRAKE BOOSTER

On Board Inspection

INFOID:0000000001703791

OPERATING CHECK

With the engine stopped, change the vacuum to the atmospheric pressure by depressing brake pedal several times at intervals of 5 seconds.

Then with brake pedal fully depressed, start engine and when the vacuum pressure reaches the standard, make sure that the clearance between brake pedal and floor panel decreases.

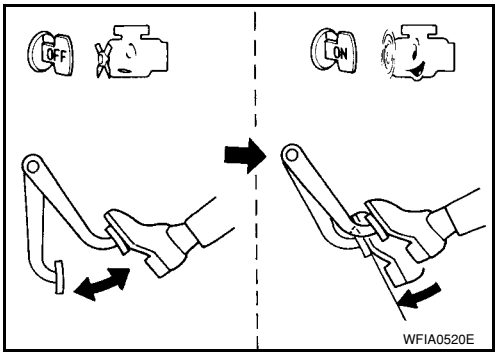

AIRTIGHT CHECK

- Run engine at idle for approximately 1 minute, and stop it after applying vacuum to booster. Depress brake pedal normally to change the vacuum to the atmospheric pressure. Make sure that distance between brake pedal and floor panel gradually increases.
- Depress the brake pedal while engine is running, then stop engine with brake pedal depressed. The pedal stroke should not change after holding pedal down for 30 seconds.

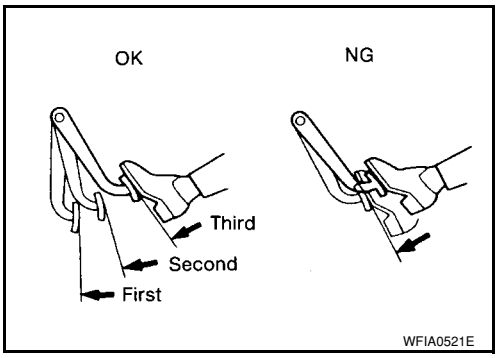

Removal and Installation

INFOID:0000000001703792

COMPONENTS

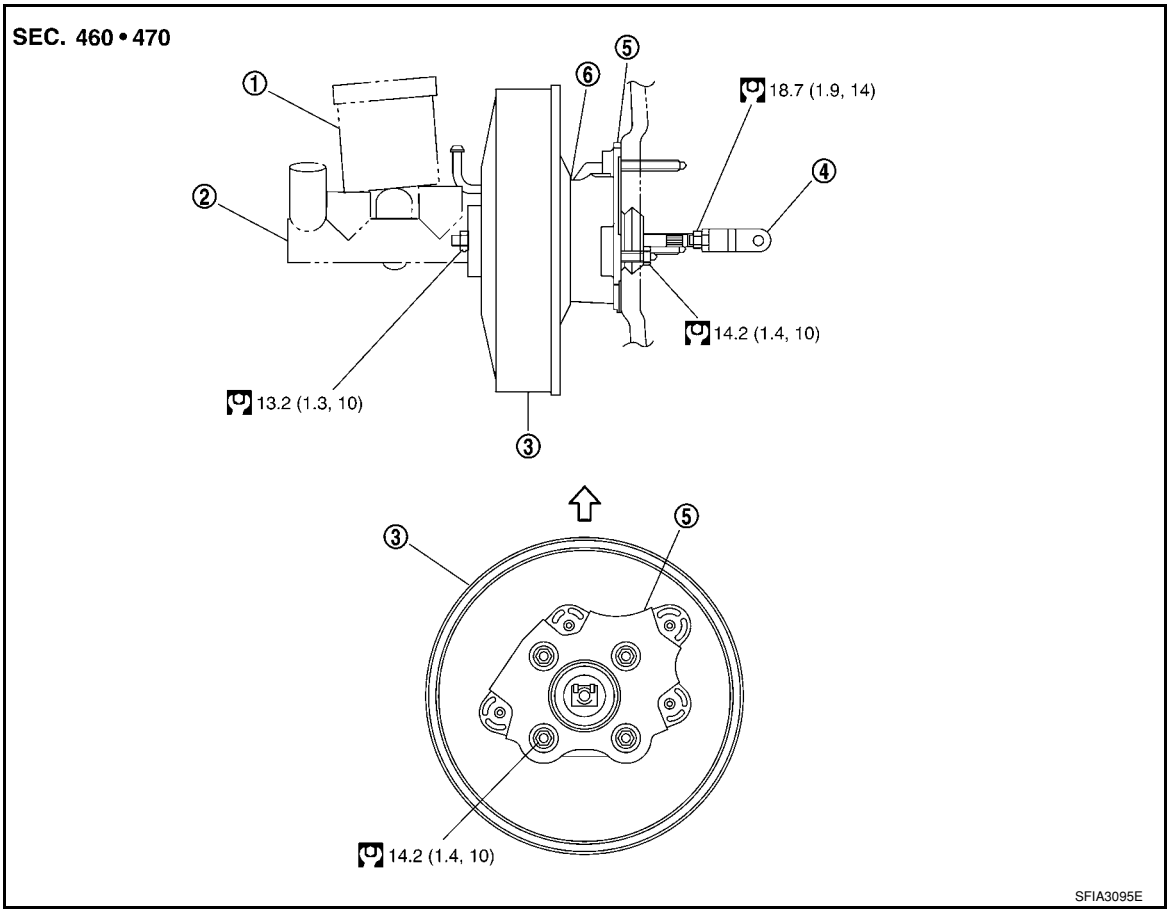

1. Reservoir tank
2. Master cylinder
3. Brake booster
4. Clevis
5. Spacer
6. Gasket

⇐: Up

REMOVAL

CAUTION:

- **Be careful not to splash brake fluid on painted areas such as body. It may cause paint damage. If brake fluid is splashed on painted surfaces of body, wipe them with cloth immediately and then wash it away with water.**
- **Be careful not to deform or bend brake tubes while removing and installing brake booster.**
- **Replace clevis pin if it is damaged.**
- **Be careful not to damage brake booster stud bolt threads. If brake booster is tilted or inclined during installation, dash panel may damage the threads.**

1. Remove vacuum hose from brake booster.
2. Remove master cylinder assembly. Refer to BR-13, "Removal and Installation" .
3. Remove snap pin and clevis pin on the clevis of the brake booster, and remove input rod from brake pedal.
4. Remove brake pedal nuts on pedal bracket.
5. Remove between spacer and dash panel nut from dash panel.
6. Remove brake booster and spacer from vehicle.
7. Remove spacer from brake booster.

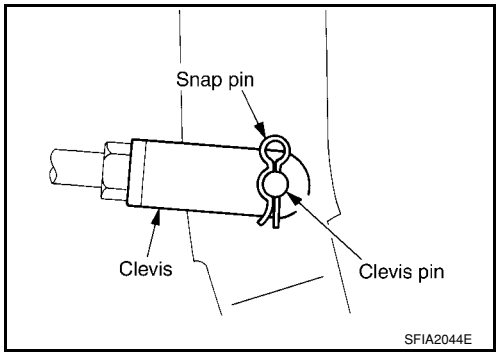

INSTALLATION

1. Loosen lock nut to adjust input rod length so that the length B satisfies the specified value.

   Length “B” : 154 - 161 mm (6.06 - 6.34 in)

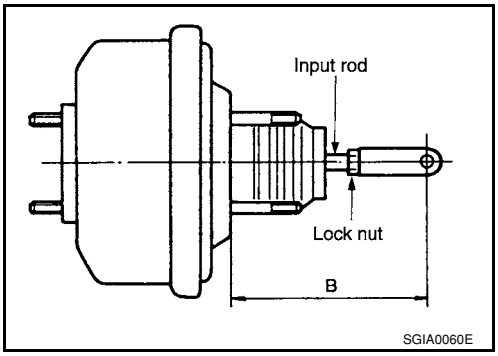

2. Install spacer to brake booster and tighten spacer nut (brake booster side) to the specified torque.
3. After adjusting length “B”, temporarily tighten lock nut to install brake booster assembly to dash panel. At this time, make sure to install a gasket between brake booster and vehicle.
   CAUTION:
   Be sure to install the gasket between brake booster and vehicle.
4. Connect brake pedal to clevis of input rod with the clevis pin and snap pin.
5. Install brake pedal bracket nuts and tighten them to the specified torque.
6. Adjust the height and play of brake pedal. Refer to BR-5, "Inspection and Adjustment" .
7. Tighten lock nut of input rod to the specified torque. Refer to "COMPONENTS" .
8. Install vacuum hose into brake booster. Refer to BR-21, "Removal and Installation" .
9. Bleed air from brake system. Refer to BR-8, "Bleeding Brake System" .

VACUUM LINES

Component

INFOID:0000000001703793

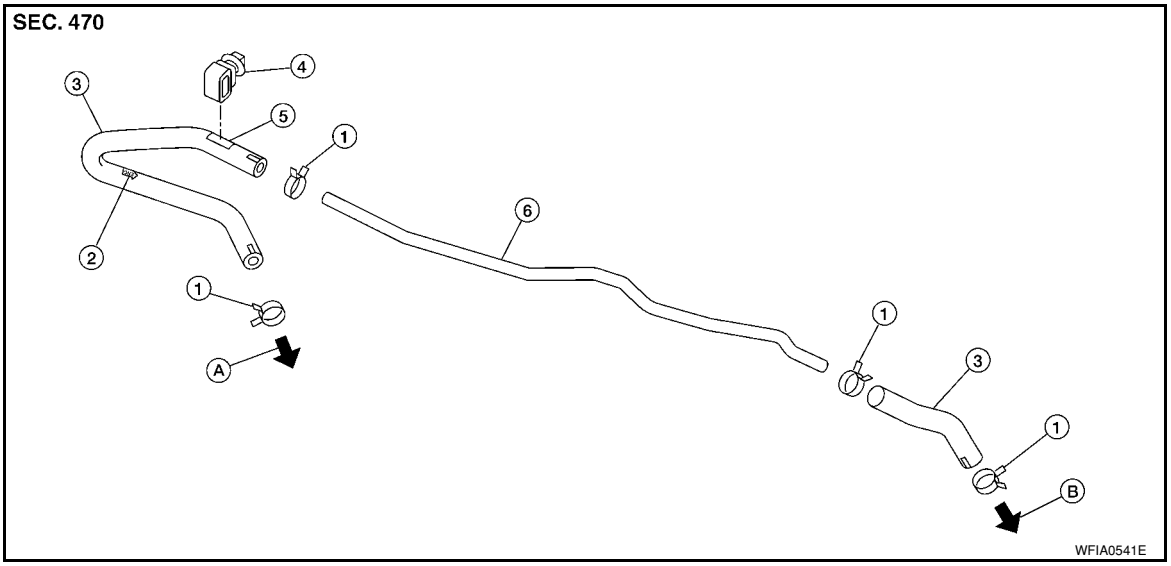

1.	Clamp	2.	Engine side indicator stamp (built-in check valve)	3.	Vacuum hose
4.	Clip	5.	Clip position stamp	6.	Vacuum tube
7.	To brake booster	A.	To intake manifold	B.	To brake booster

Removal and Installation

INFOID:0000000001703794

CAUTION:

- **Because vacuum hose contains a check valve, it must be installed in the correct orientation. Refer to the stamp or label to confirm correct installation. Brake booster will not operate normally if hose is installed in the wrong direction.**
- **Insert vacuum hose at least 24 mm (0.94 in).**
- **Never use lubricating oil during assembly.**

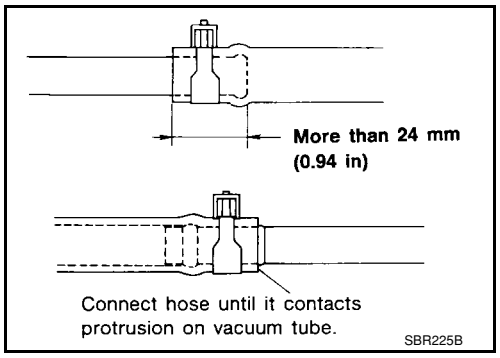

Inspection

INFOID:0000000001703795

VISUAL INSPECTION

Check for improper assembly, damage and aging.

CHECK VALVE INSPECTION

Airtightness Inspection

Use a handy vacuum pump to check.

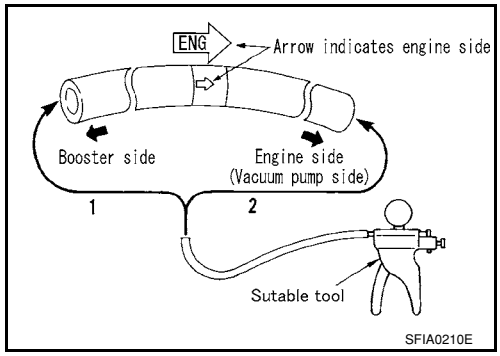

When connected to booster side (1):

Vacuum decrease should be within 1.3 kPa (10 mmHg, 0.39 inHg) for 15 seconds under a vacuum of –66.7 kPa (–500 mmHg, –19.69 inHg)

When connected to engine side (2):

No vacuum will be applied

Replace vacuum hose with the check valve as a set if damage or deformation is present at the vacuum hose.

FRONT DISC BRAKE

On Board Inspection

INFOID:0000000001703796

PAD WEAR INSPECTION

- Check pad thickness from check hole on cylinder body.

Standard thickness : 9.5 mm (0.374 in)
Repair limit thickness : 2.0 mm (0.079 in)

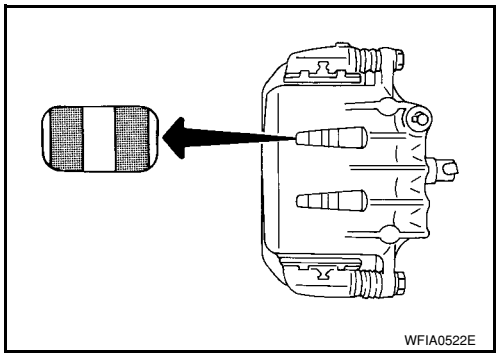

Component

INFOID:0000000001703797

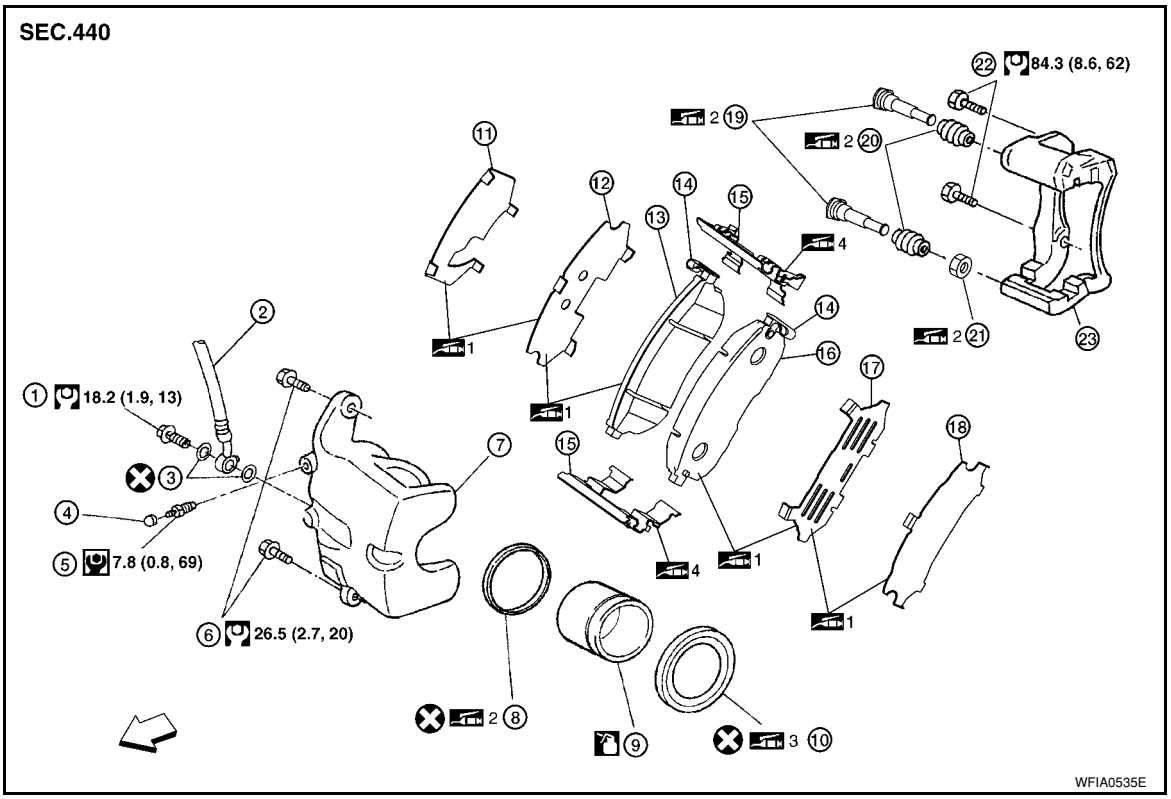

1.	Union bolt	2.	Brake hose	3.	Copper washer
4.	Cap	5.	Bleed valve	6.	Sliding pin bolt
7.	Cylinder body	8.	Piston seal	9.	Piston
10.	Piston boot	11.	Inner shim cover	12.	Inner shim
13.	Inner pad	14.	Pad wear sensor	15.	Pad retainer
16.	Outer pad	17.	Outer shim	18.	Outer shim cover
19.	Sliding pin	20.	Sliding pin boot	21.	Bushing
22.	Torque member mounting bolt	23.	Torque member	⇐	: Front
	: Brake fluid		1: M-77 grease		2: Rubber grease
	3: Polyglycol ether based lubricant		4: M7439 grease		

Refer to GI section GI-8, "Component" for symbol marks unless shown.

CAUTION:
- **Clean dust on caliper and brake pad with a vacuum dust collector. Do not blow with compressed air.**
- **While removing brake pad or cylinder body, do not depress brake pedal because piston will pop out.**
- **It is not necessary to remove torque member mounting bolts and brake hose except for disassembly or replacement of caliper assembly. In this case, hang cylinder body with a wire so that brake hose is not under tension.**
- **Do not damage piston boot.**
- **If any shim is subject to serious corrosion, replace it with a new one.**
- **Keep rotor free from brake fluid.**
- **When replacing brake pad, replace shim with a new one.**

Removal and Installation of Brake Pad

INFOID:0000000001703798

REMOVAL

1. Remove tires from vehicle.
2. Remove sliding pin bolt (lower side).
3. Hang cylinder body with a wire, and remove pads, shims and pad retainers from torque member.
   CAUTION:
   When removing pad retainer from torque member, lift pad retainer in the direction shown by arrow, so as not to deform it.

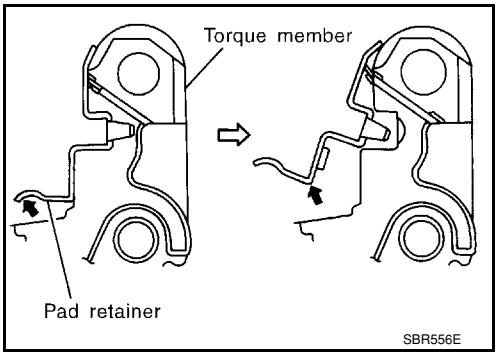

INSTALLATION

1. Apply M-77 grease or equivalent to the shims. Install shims to pads.
   CAUTION:
   Securely install shims according to mounting direction of pads.
2. Apply M7439 grease or equivalent to pad contact surface on pad retainers. Install pad retainers and pads to the torque member.
   CAUTION:
   - **When installing pad retainer, attach it firmly so that it is not lifted up from torque member, as shown.**

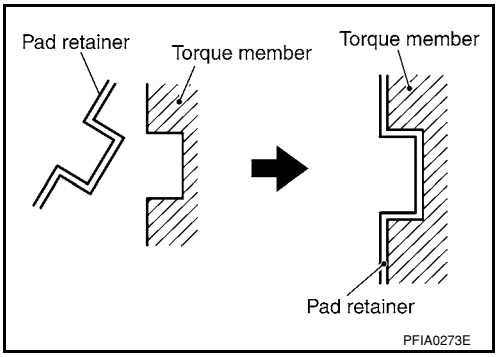

3. Install cylinder body to torque member.
   NOTE:
   Use a disc brake piston tool (commercial service tool) to easily press to piston in.
   CAUTION:
   Check the brake fluid level in the reservoir tank for fluid level because brake fluid returns to master cylinder reservoir tank when pressing piston in.
4. Install lower sliding pin bolt (lower side), and tighten it to the specified torque. Refer to BR-23, "Component" .
5. Check brake for drag.
6. Install tires to the vehicle.

Removal and Installation of Brake Caliper Assembly

INFOID:0000000001703799

REMOVAL

1. Remove tires from vehicle.
2. Secure disc rotor using wheel nuts.
   CAUTION:
   Put matching marks on wheel hub assembly and disc rotor, if it is necessary to remove disc rotor.
3. Drain brake fluid. Refer to BR-8, "Drain and Refill" .
4. Remove union bolt, and then remove brake hose from caliper assembly.
5. Remove torque member mounting bolts from torque member, and remove caliper assembly from vehicle.

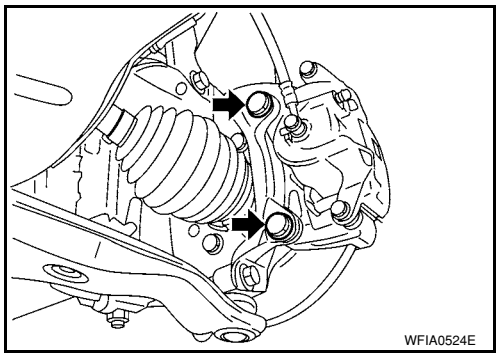

INSTALLATION

1. Install caliper assembly to vehicle, and tighten mounting bolts to the specified torque. Refer to BR-23, "Component" .
   CAUTION:
   Before installing torque member to vehicle, wipe oil and grease on mounting surface of steering knuckle and torque member.
2. Install brake hose to caliper assembly. Refer to BR-10, "Hydraulic Circuit" .
3. Refill with new brake fluid and bleed air. Refer to BR-8, "Bleeding Brake System" .
4. Check front disc brake for drag.
5. Install tires to the vehicle.

Disassembly and Assembly of Brake Caliper Assembly

INFOID:0000000001703800

NOTE:
Do not remove torque member, brake pads, shims and pad retainers, when disassembling or assembling cylinder body.

DISASSEMBLY

1. Remove caliper assembly from vehicle. Refer to BR-25, "Removal and Installation of Brake Caliper Assembly" .
2. Remove sliding pin bolts from cylinder body, and remove pads, shims and pad retainers from torque member, if necessary.
   CAUTION:
   When removing pad retainer from torque member, lift the pad retainer in the direction shown by arrow, so as not to deform it.

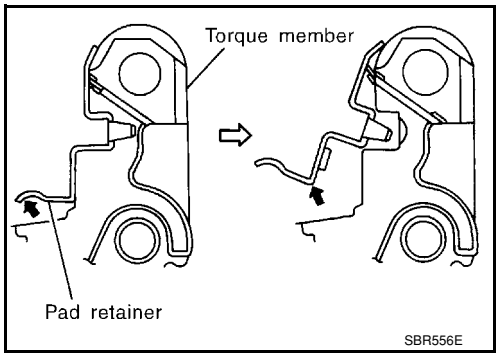

3. Remove sliding pins and sliding pin boots from torque member.
4. Place a wooden block as shown, and blow air from union bolt mounting hole to remove piston and piston boot.
   CAUTION:
   Do not get fingers caught in the piston.

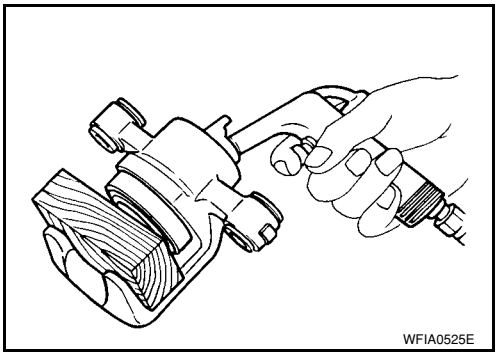

5. Remove piston seal with a flat-bladed screwdriver.
   CAUTION:
   Be careful not to damage the inner wall of cylinder.

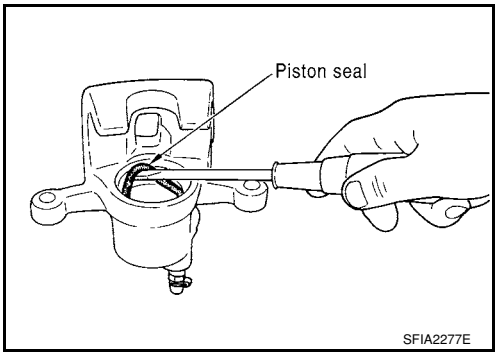

INSPECTION AFTER DISASSEMBLY

Cylinder Body

Check the inner wall of cylinder for corrosion, wear, and damage. Replace cylinder body as necessary.

CAUTION:

Clean cylinder body using new brake fluid. Never use mineral oils such as gasoline or kerosene.

Torque Member

Check for wear, cracks, and damage. Replace torque member as necessary..

Piston

Check piston surface for corrosion, wear, and damage. Replace piston as necessary.

CAUTION:

The piston sliding surface is plated. Do not polish with sandpaper.

Sliding Pin, Sliding Pin Bolt, and Sliding Pin Boot

Check sliding pins, sliding pin bolts and sliding pin boots for wear, damage, and cracks. Replace applicable part as necessary.

ASSEMBLY

CAUTION:

When assembling, use only specified rubber lubricant.

1. Apply polyglycol ether based lubricant to new piston seal and install them to cylinder body.

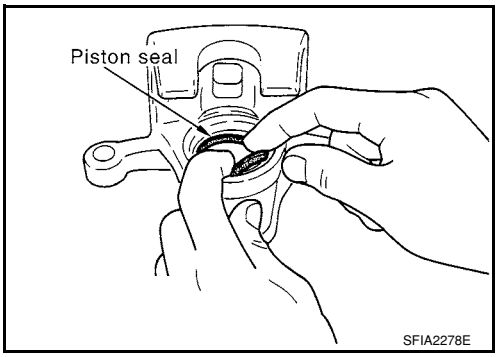

2. Apply rubber grease to piston boot and apply brake fluid to piston. Cover the piston end with piston boot, and install cylinder-side lip on piston boot properly into groove on cylinder body.

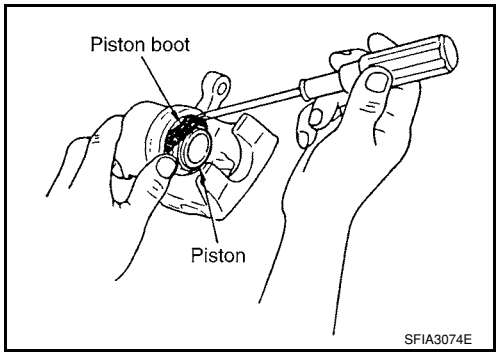

3. Press piston into cylinder body by hand to assemble piston-side lip on piston boot properly into a groove on piston.
   CAUTION:
   Press piston evenly and change pressing point to prevent inner wall of cylinder from being rubbed.
4. Install sliding pins and sliding pin boots to the torque member.

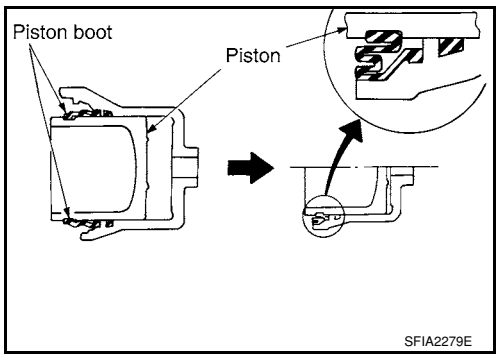

5. If pads, shims and pad retainers were removed, install them to torque member. Refer to BR-24, "Removal and Installation of Brake Pad" .
6. Install cylinder body to torque member.
7. Install sliding pin bolts.
8. Install caliper assembly to vehicle. Refer to BR-25, "Removal and Installation of Brake Caliper Assembly" .
9. Tighten sliding pin bolts to specified torque. Refer to BR-23, "Component" .

DISC ROTOR INSPECTION

Visual Inspection

Check surfaces of disc rotor for uneven wear, cracks, and serious damage. Replace applicable part as necessary.

Runout Inspection

1. Using wheel nuts, secure disc rotor to wheels hub 2 or more positions.
2. Using a dial indicator, check runout.
   CAUTION:
   Make sure that wheel bearing axial end play is within the specifications before measuring runout. Refer to FAX-5, "On-Vehicle Inspection and Service" .

   Runout limit : 0.04 mm (0.0016 in) or less [Measured at 10.0 mm (0.394 in) inside the disc edge]

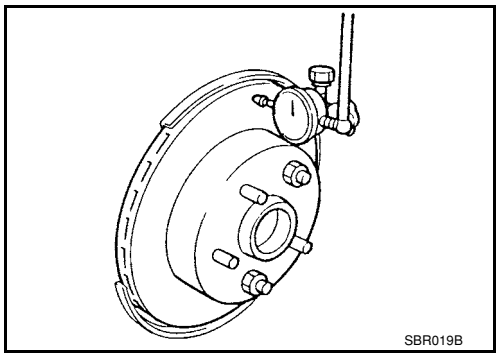

3. If runout is outside the limit, find the minimum runout point by shifting the mounting positions of disc rotor and wheel hub by one hole.

Thickness Inspection

1. Using a micrometer, check thickness of disc rotor. If thickness is outside the standard, replace disc rotor.

Standard thickness	**: 24.0 mm (0.945 in)**
Repair limit thickness	**: 22.0 mm (0.866 in)**
Maximum uneven wear (measured at 8 positions)	**: 0.02 mm (0.0008 in) or less**

2. If runout is still out of the specification, grind rotor with on-car brake lathe (″MAD, DL-8700″, ″AMMCO 700 and 705″ or equivalent) until runout becomes within the specified limit.

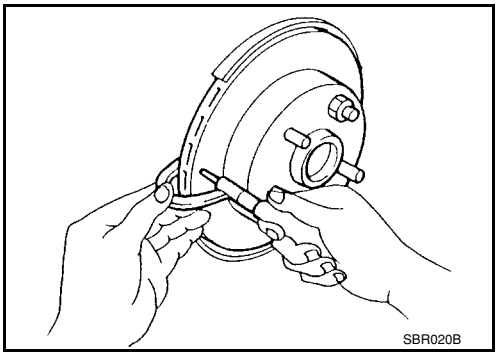

Brake Burnishing Procedure

INFOID:0000000001703801

Burnish the new braking surfaces according to following procedure after refinishing or replacing disc rotors, pads, or if a soft pedal occurs at very low mileage.

CAUTION:

- **Be careful of vehicle speed because brake does not operate easily until pad and disc rotor are securely fitted.**
- **Only perform this procedure under safe road and traffic conditions. Use extreme caution.**

1. Drive vehicle on straight, flat road.
2. Depress brake pedal with the power to stop vehicle within 3 to 5 seconds until the vehicle stops.
3. Drive without depressing brake pedal for a few minutes to cool brake.
4. Repeat steps 1 to 3 until pad and disc rotor are securely fitted.

REAR DRUM BRAKE

Component

INFOID:0000000001703802

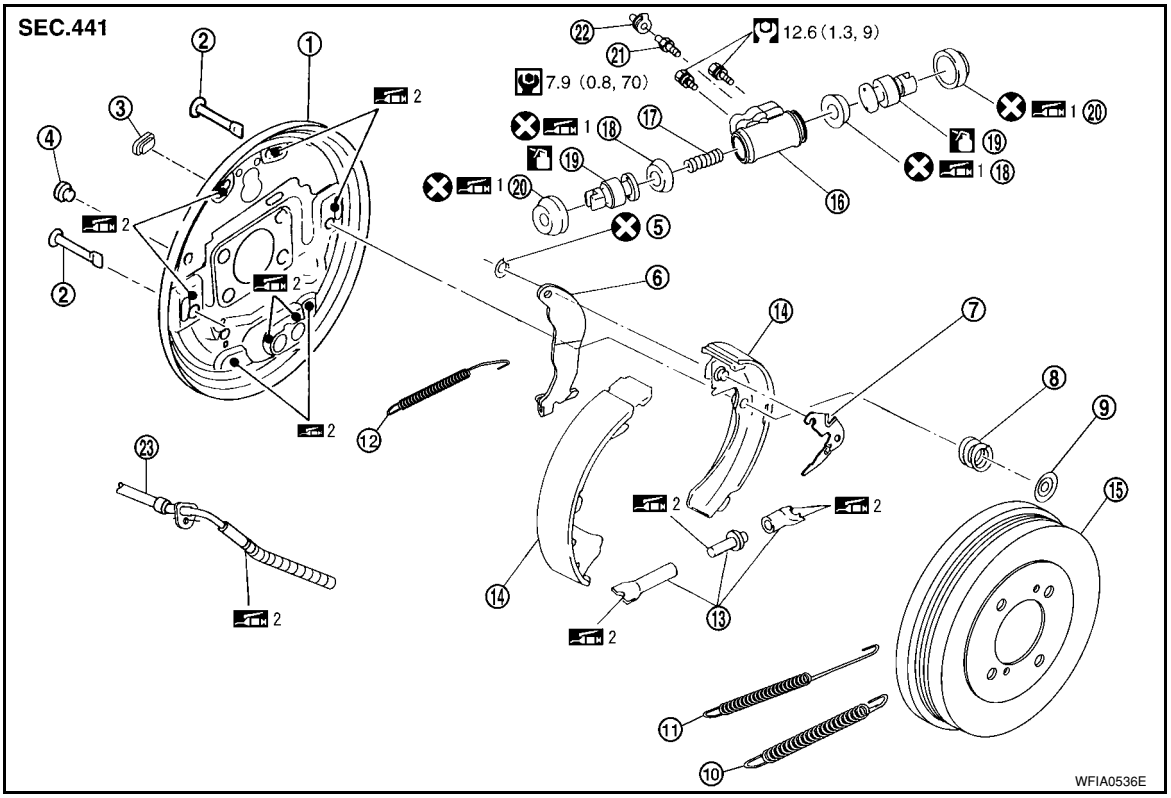

1. Back plate	2. Shoe hold pin	3. Plug
4. Plug	5. Retainer ring	6. Operating lever
7. Adjuster lever	8. Spring	9. Retainer
10. Return spring (lower side)	11. Return spring (upper side)	12. Adjuster spring
13. Adjuster	14. Brake shoe	15. Brake drum
16. Wheel cylinder	17. Spring	18. Piston seal
19. Piston	20. Boot	21. Bleed valve
22. Cap	23. Parking brake rear cable	
1: PBC (Poly Butyl Cuprysil) grease or silicone-based grease	2: Rubber grease	: Brake fluid

Refer to GI section GI-8, "Component" for symbol marks except as shown.

CAUTION:
- **Clean dust on drum and back plate with a vacuum dust collector. Do not blow with compressed air.**
- **Make sure parking brake lever is released completely.**

Removal and Installation of Drum Brake Assembly

INFOID:0000000001703803

REMOVAL

1. Remove tire from the vehicle.
2. With the parking brake lever released, remove the brake drum. If it is difficult to remove brake drum, remove as follows:

a. Press up adjuster lever with a wire or equivalent from plug hole (plug hole at the side of wheel cylinder) on the back plate as shown in the figure. Turn frame of adjuster assembly with a flat bladed screw driver in the direction that narrows frame to narrow enlarged brake shoe.

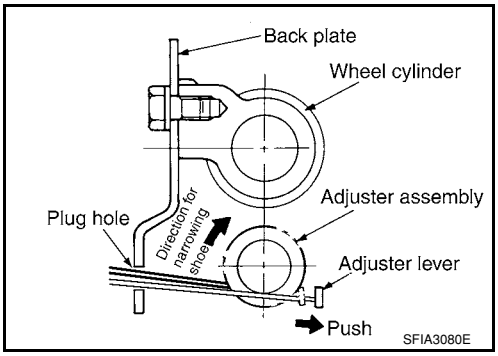

3. While pushing and rotating the retainer, pull out shoe hold pin, and remove shoe assembly.
   CAUTION:
   Do not damage the wheel cylinder boot.

4. Remove the parking brake rear cable from the operating lever.
   CAUTION:
   Do not bend the parking brake cable.
5. Disassemble the shoe assembly (shoe, springs, adjuster, adjuster lever).
6. Remove retainer ring (A) with a tool to separate operating lever (C) from brake shoe.
   - Retainer ring (A)
   - Contact point (B)
   - Operating lever (C)
   - Pin (D)

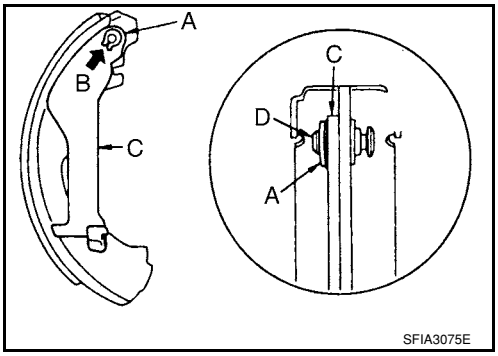

INSPECTION AFTER REMOVAL

Lining Thickness Inspection
Check lining thickness.

Standard thickness (A) : 4.0 mm (0.157 in)
Repair limit thickness (A) : 1.5 mm (0.059 in)

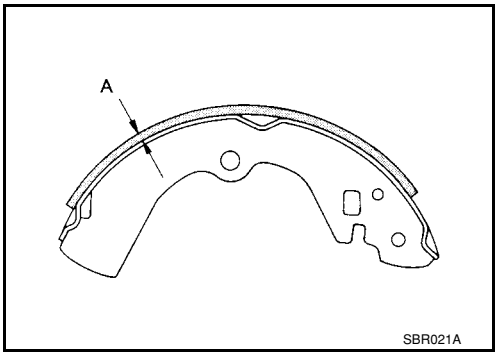

Drum Inner Diameter Inspection
Check inner diameter of brake drum.
Measurement area: lining contact surface (center)

Standard inner diameter : 228.6 mm (9.000 in) dia.
Repair limit inner diameter : 230.0 mm (9.055 in) dia.

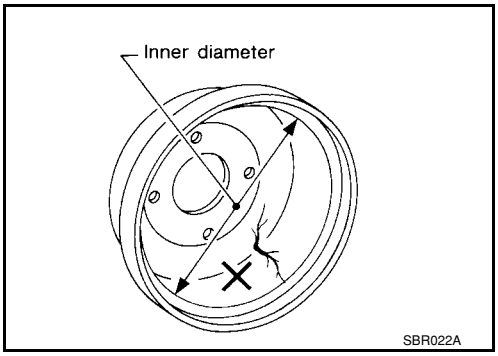

Wheel Cylinder Leakage Inspection

- Check wheel cylinder for brake fluid leakage.
- Check for wear, damage, and looseness. If any non-standard condition is found, replace it.

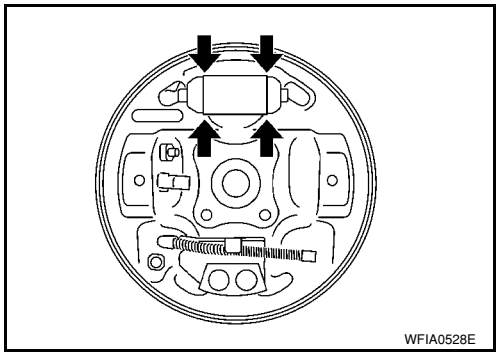

Other Inspections

Check the following:

- Inside of the drum for excessive wear, damage, and cracks.
- Lining for excessive wear, damage, and peeling.
- Shoe sliding surface for excessive wear and damage.
- Return spring for sagging.
- Check back plate for damage, cracks, and deformation. Replace back plate as necessary.

Replace applicable part as necessary.

INSTALLATION

1. If operating lever (C) if removed.

a. Install operating lever (C) to brake shoe.

b. Install retainer ring (A) to operating lever (C), and crimp them until their contact points (B) are met.
   - Retainer ring (A)
   - Contact point (B)
   - Operating lever (C)
   - Pin (D)

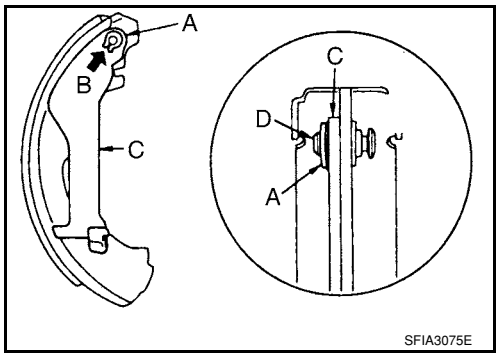

2. Apply Genuine NISSAN brake grease (KRF0000005) to brake shoes sliding surfaces (the shaded areas) and other parts on the back plate as indicated by arrows.

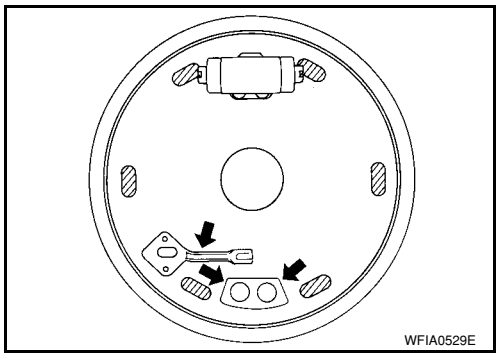

3. Apply Genuine NISSAN brake grease (KRF0000005) to screw and confirm the difference between right and left wheel for assembling when disassembled.

Right rear wheel	**Thread cutting direction**	**: Right-hand screw**
Left rear wheel	**Thread cutting direction**	**: Left-hand screw**

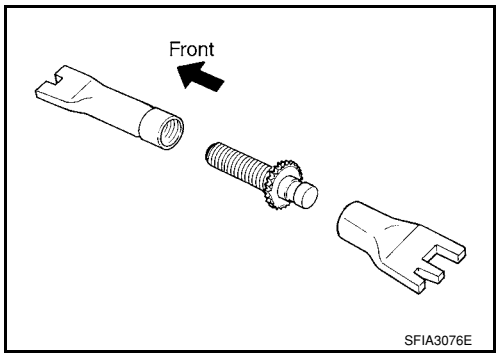

4. Assemble the shoe, adjuster, adjuster lever and springs to the shoe assembly.

5. Connect the parking brake rear cable to the operating lever.
6. Install the shoe assembly. After assembly, be sure that each part is installed properly.
   CAUTION:
   Do not damage the wheel cylinder piston boot.
7. Install the brake drum.
8. Depress brake pedal for several times (approximately 2, 3 times).
9. Adjust clearance of brake shoe. Refer to PB-4, "On-Vehicle Service" .
10. Install tires to the vehicle.

Removal and Installation of Wheel Cylinder

INFOID:0000000001703804

REMOVAL

1. Drain brake fluid. Refer to BR-8, "Drain and Refill" .
2. Remove the rear brake shoe assembly. Refer to BR-29, "Removal and Installation of Drum Brake Assembly" .
3. Remove the brake tube from the wheel cylinder.
4. Remove bolts on the wheel cylinder, and then remove wheel cylinder from the back plate.

INSTALLATION

- Installation is the reverse order of removal. Tighten bolts to the specified torque. Refer to BR-29, "Component" .
- Refill with new brake fluid and bleed air. Refer to BR-8, "Bleeding Brake System" .

Disassembly and Assembly of Wheel Cylinder

INFOID:0000000001703805

DISASSEMBLY

1. Remove boots at the right and left of the wheel cylinder, and pull out the pistons from cylinder.
2. Remove piston from piston cup.

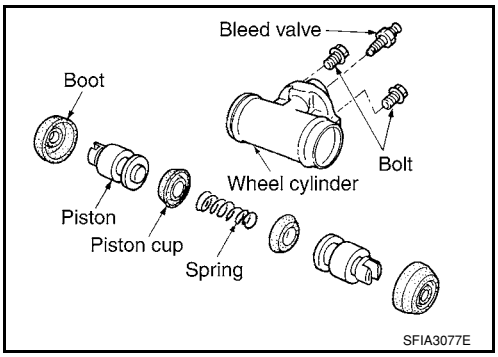

INSPECTION AFTER DISASSEMBLY

Check the pistons, piston cups, and inner wall of the cylinder for wear, corrosion, and damage. If malfunction is detected, replace it.

ASSEMBLY

CAUTION:
- **Do not use Nissan rubber grease (KRE0000010, KRE000001001) during assembly.**
- **When inserting the piston, be careful not to scratch the cylinder.**

1. Apply brake fluid to the piston sliding surface on the wheel cylinder.
2. Apply Genuine Nissan rubber lubricant (KRE1200030) to the piston cups and piston boots and assemble as shown.

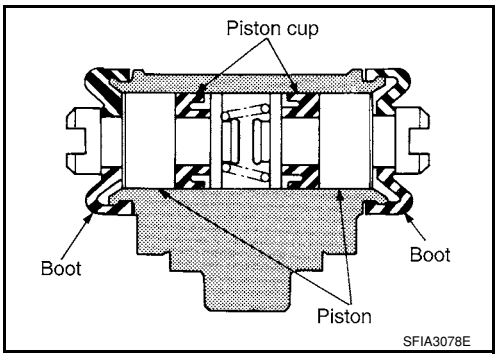

SERVICE DATA AND SPECIFICATIONS (SDS)

General Specification

INFOID:0000000001703806

Front brake	Brake model	CLZ25VA
	Cylinder bore diameter	57.2 mm (2.252 in)
	Pad Length × width × thickness	125.6 mm × 46.0 mm × 9.5 mm (4.945 in × 1.811 in × 0.374 in)
	Rotor outer diameter × thickness	280 mm × 24.0 mm (11.02 in × 0.945 in)
Rear brake	Brake model	LT20D
	Cylinder bore diameter	15.87 mm (0.625 in)
	Lining Length × width × thickness	194.1 mm × 30.0 mm × 4.0 mm (7.642 in × 1.181 in × 0.157 in)
	Drum outer diameter	228.6 mm (9.000 in)
Master cylinder	Cylinder bore diameter	22.22 mm (0.875 in)
Control valve	Valve model	Electric brake force distribution
Brake booster	Booster model	C255
	Diaphragm diameter	255 mm (10.04 in)
Recommended brake fluid		Refer to MA-10 .

Brake Pedal

INFOID:0000000001703807

Unit: mm (in)

Brake pedal free height (from dash panel top surface)	A/T, CVT model	172.4 - 182.4 (6.79 - 7.18)
	M/T model	162.3 - 172.3 (6.39 - 6.78)
Brake pedal depressed height [under a force of 490 N (50 kg-f, 110 lb-f) with the engine running]	A/T, CVT model	98 (3.86) or more
	M/T model	90 (3.54) or more
Clearance between brake pedal lever and the threaded end of stop lamp switch		0.74 - 1.96 (0.0291 - 0.0772)
Pedal play		3 - 11 (0.12 - 0.43)

Check Valve

INFOID:0000000001703808

Vacuum leakage [at vacuum of – 66.7 kPa (– 500 mmHg, – 19.69 inHg]	Within 1.3 kPa (10 mmHg, 0.39 inHg) of vacuum for 15 seconds

Brake Booster

INFOID:0000000001703809

Vacuum type

Vacuum leakage [at vacuum of – 66.7 kPa (– 500 mmHg, –19.69 inHg)]	Within 3.3 kPa (25 mmHg, 0.98 inHg) of vacuum for 15 seconds
Input rod installation standard dimension	154 - 161 mm (6.06 - 6.34 in)

Front Disc Brake

INFOID:0000000001703810

Unit: mm (in)

Brake model		CLZ25VA
Brake pad	Standard thickness (new)	9.5 (0.374)
	Repair limit thickness	2.0 (0.079)

Disc rotor	Standard thickness (new)	24.0 (0.945)
	Repair limit thickness	22.0 (0.866)
	Runout limit	0.04 (0.0016)
	Maximum uneven wear (measured at 8 positions)	0.02 mm (0.0008 in) or less

Rear Drum Brake

INFOID:0000000001703811

Unit: mm (in)

Brake model		LT20D
Brake lining	Standard thickness (new)	4.0 (0.157)
	Repair limit thickness	1.5 (0.059)
Drum	Standard inner diameter (new)	228.6 (9.000)
	Repair limit inner diameter	230.0 (9.055)

SECTION BRC
BRAKE CONTROL SYSTEM

CONTENTS

ABS

SERVICE INFORMATION 2

PRECAUTIONS 2
Precaution for Supplemental Restraint System (SRS) "AIR BAG" and "SEAT BELT PRE-TENSIONER" 2
Precaution for Brake System 2
Precaution for Brake Control 2
Precaution for CAN System 3

PREPARATION 4
Special Service Tool 4
Commercial Service Tool 4

SYSTEM DESCRIPTION 5
System Component 5
ABS Function 5
EBD Function 5
Fail-Safe Function 5
Hydraulic Circuit Diagram 6

CAN COMMUNICATION 7
System Description 7

TROUBLE DIAGNOSIS 8
How to Perform Trouble Diagnosis for Quick and Accurate Repair 8
Component Parts and Harness Connector Location 11
Schematic 12
Wiring Diagram - ABS - 13
Basic Inspection 16
Warning Lamp and Indicator Timing 17
Control Unit Input/Output Signal Standard 17
CONSULT-III Function (ABS) 18

TROUBLE DIAGNOSIS FOR SELF-DIAGNOSTIC ITEMS 24
Wheel Sensor System 24
ABS Control Unit Inspection 25
Solenoid Valve System Inspection 25
Actuator Motor, Motor Relay, and Circuit Inspection 26
ABS Control Unit Power and Ground Systems Inspection 27
CAN Communication System Inspection 28

TROUBLE DIAGNOSES FOR SYMPTOMS 29
ABS Works Frequently 29
Unexpected Pedal Action 29
Long Stopping Distance 30
ABS Does Not Work 30
Pedal Vibration or ABS Operation Noise 30

WHEEL SENSORS 32
Removal and Installation 32

SENSOR ROTOR 34
Removal and Installation 34

ACTUATOR AND ELECTRIC UNIT (ASSEMBLY) 35
Removal and Installation 35

SERVICE INFORMATION

PRECAUTIONS

Precaution for Supplemental Restraint System (SRS) "AIR BAG" and "SEAT BELT PRE-TENSIONER"

INFOID:0000000001703818

The Supplemental Restraint System such as “AIR BAG” and “SEAT BELT PRE-TENSIONER”, used along with a front seat belt, helps to reduce the risk or severity of injury to the driver and front passenger for certain types of collision. This system includes seat belt switch inputs and dual stage front air bag modules. The SRS system uses the seat belt switches to determine the front air bag deployment, and may only deploy one front air bag, depending on the severity of a collision and whether the front occupants are belted or unbelted.
Information necessary to service the system safely is included in the SRS and SB section of this Service Manual.

WARNING:

- **To avoid rendering the SRS inoperative, which could increase the risk of personal injury or death in the event of a collision which would result in air bag inflation, all maintenance must be performed by an authorized NISSAN/INFINITI dealer.**
- **Improper maintenance, including incorrect removal and installation of the SRS, can lead to personal injury caused by unintentional activation of the system. For removal of Spiral Cable and Air Bag Module, see the SRS section.**
- **Do not use electrical test equipment on any circuit related to the SRS unless instructed to in this Service Manual. SRS wiring harnesses can be identified by yellow and/or orange harnesses or harness connectors.**

Precaution for Brake System

INFOID:0000000001703819

CAUTION:

- **Refer to MA-10 for recommended brake fluid.**
- **Never reuse drained brake fluid.**
- **Be careful not to splash brake fluid on painted areas; it may cause paint damage. If brake fluid is splashed on painted areas, wash it away with water immediately.**
- **To clean or wash all parts of master cylinder and disc brake caliper, use clean brake fluid.**
- **Never use mineral oils such as gasoline or kerosene. They will ruin rubber parts of the hydraulic system.**
- **Use flare nut wrench when removing and installing brake tube.**
- **If a brake fluid leak is found, the part must be disassembled without fail. Then it has to be replaced with a new one if a defect exists.**
- **Turn the ignition switch OFF and remove the connector of the ABS actuator and electric unit (control unit) or the battery terminal before performing the work.**
- **Always torque brake lines when installing.**
- **Burnish the brake contact surfaces after refinishing or replacing rotors, after replacing pads, or if a soft pedal occurs at very low mileage. Refer to BR-28, "Brake Burnishing Procedure".**

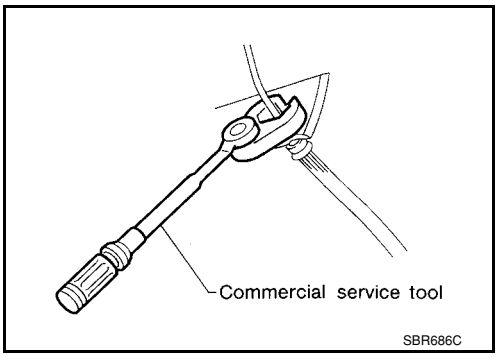

WARNING:

- **Clean brake pads and shoes with a waste cloth, then wipe with a dust collector.**

Precaution for Brake Control

INFOID:0000000001703821

- During ABS operation, the brake pedal may vibrate lightly and a mechanical noise may be heard. This is normal.
- Just after starting the vehicle, the brake pedal may vibrate or motor operating noises may be heard from engine compartment. This is normal due to the self check operation.
- Stopping distance may be longer than that of vehicles without ABS when vehicle drives on rough, gravel, or snow-covered (fresh, deep snow) roads.

- When an error is indicated by ABS or another warning lamp, collect all necessary information from customer (what symptoms are present under what conditions) and check for simple causes before starting diagnosis. Besides electrical system inspection, check brake booster operation, brake fluid level, and fluid leaks.
- If incorrect tire sizes or types are installed on the vehicle or brake pads are not Genuine NISSAN parts, stopping distance or steering stability may deteriorate.
- If there is a radio, antenna or related wiring near the control module, ABS function may have a malfunction or error.
- If aftermarket parts (car stereo, CD player, etc.) have been installed, check for incidents such as harness pinches, open circuits or improper wiring.

Precaution for CAN System

INFOID:0000000001703822

- Do not apply voltage of 7.0V or higher to terminal to be measured.
- Maximum open terminal voltage of tester in use must be less than 7.0V.
- Before checking harnesses, turn ignition switch OFF and disconnect battery negative cable.
- Area to be repaired must be soldered and wrapped with tape. Make sure that fraying of twisted wire is within 110 mm (4.33 in).

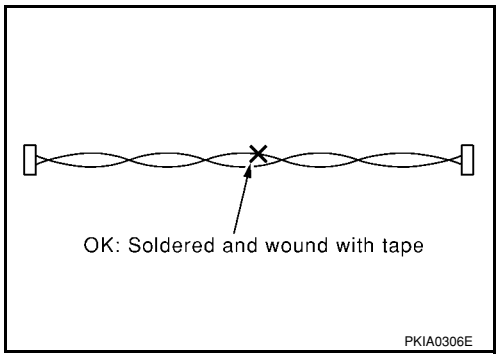

- Do not make a bypass connection to repaired area. (If the circuit is bypassed, characteristics of twisted wire will be lost.)

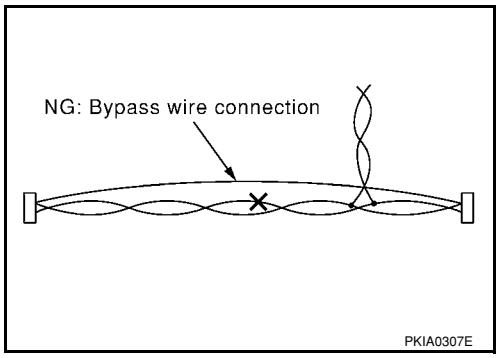

PREPARATION

Special Service Tool

INFOID:0000000001703823

The actual shapes of Kent-Moore tools may differ from those of special service tools illustrated here.

Tool number (Kent-Moore No.) Tool name	Description
KV991J0080 (J-45741) ABS active wheel sensor tester 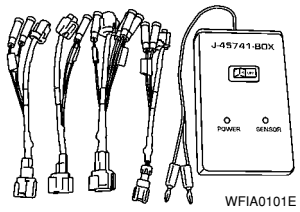 WFIA0101E	Checking operation of ABS active wheel sensors

Commercial Service Tool

INFOID:0000000001703824

Tool name	Description
1. Flare nut crowfoot 2. Torque wrench 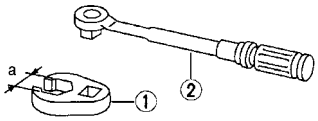 S-NT360	Removing and installing brake piping **a: 10 mm (0.39 in)/12 mm (0.47 in)**

SYSTEM DESCRIPTION

System Component

INFOID:0000000001703825

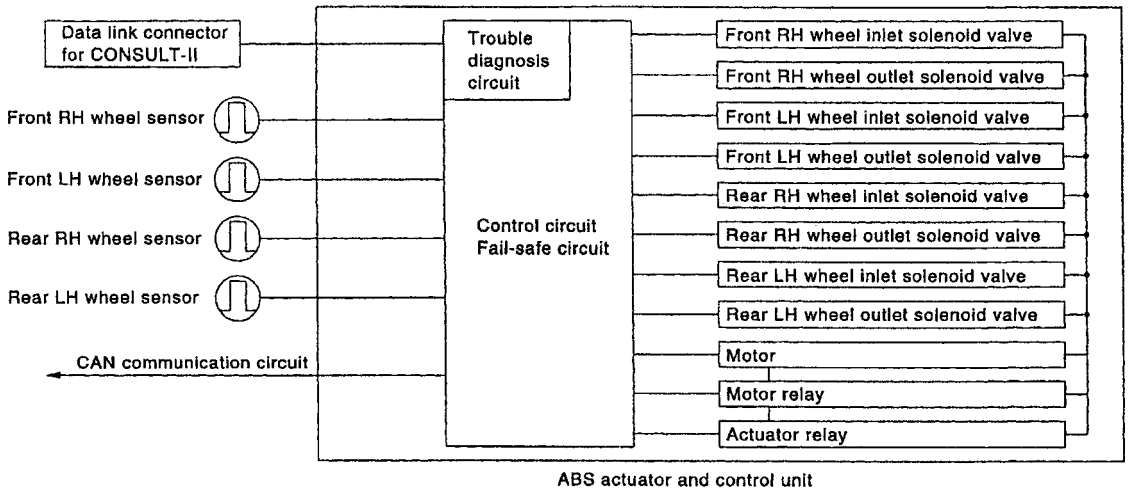

WFIA0118E

ABS Function

INFOID:0000000001703826

- The Anti-Lock Brake System detects wheel revolution while braking and improves handling stability during sudden braking by electrically preventing wheel lockup. Maneuverability is also improved for avoiding obstacles during emergency braking.
- If the electrical system malfunctions, the Fail-Safe function is activated, the ABS becomes inoperative and the ABS warning lamp turns on.
- The electrical system can be diagnosed using CONSULT-III.
- During ABS operation, the brake pedal may vibrate lightly and a mechanical noise may be heard. This is normal.
- Just after starting the vehicle, the brake pedal may vibrate or motor operating noises may be heard from the engine compartment. This is normal due to the self check operation.
- Stopping distance may be longer than that of vehicles without ABS when vehicle drives on rough, gravel, or snow-covered (fresh, deep snow) roads.

EBD Function

INFOID:0000000001703827

- Electronic Brake Distribution is a function that detects subtle slippages between the front and rear wheels during braking, and it improves handling stability by electronically controlling the brake fluid pressure which results in reduced rear wheel slippage.
- If the electrical system malfunctions, the Fail-Safe function is activated, the EBD and ABS become inoperative, and the ABS warning lamp and brake warning lamp are turned on.
- The electrical system can be diagnosed using CONSULT-III.
- During EBD operation, the brake pedal may vibrate lightly and a mechanical noise may be heard. This is normal.
- Just after starting the vehicle, the brake pedal may vibrate or motor operating noises may be heard from the engine compartment. This is normal due to the self check operation.

Fail-Safe Function

INFOID:0000000001703828

CAUTION:
If the Fail-Safe function is activated, perform the Self Diagnosis for ABS system.

ABS/EBD SYSTEM

In case of an electrical malfunction with the ABS, the ABS warning lamp will turn on. In case of an electrical malfunction with the EBD system, the brake warning lamp and the ABS warning lamp will turn on.
The system will revert to one of the following conditions of the Fail-Safe function.

1. For ABS malfunction, only the EBD is operative and the condition of the vehicle is the same condition of vehicles without ABS system.

2. For EBD malfunction, the EBD and ABS become inoperative, and the condition of the vehicle is the same as the condition of vehicles without ABS or EBD system.

Hydraulic Circuit Diagram

INFOID:0000000001703829

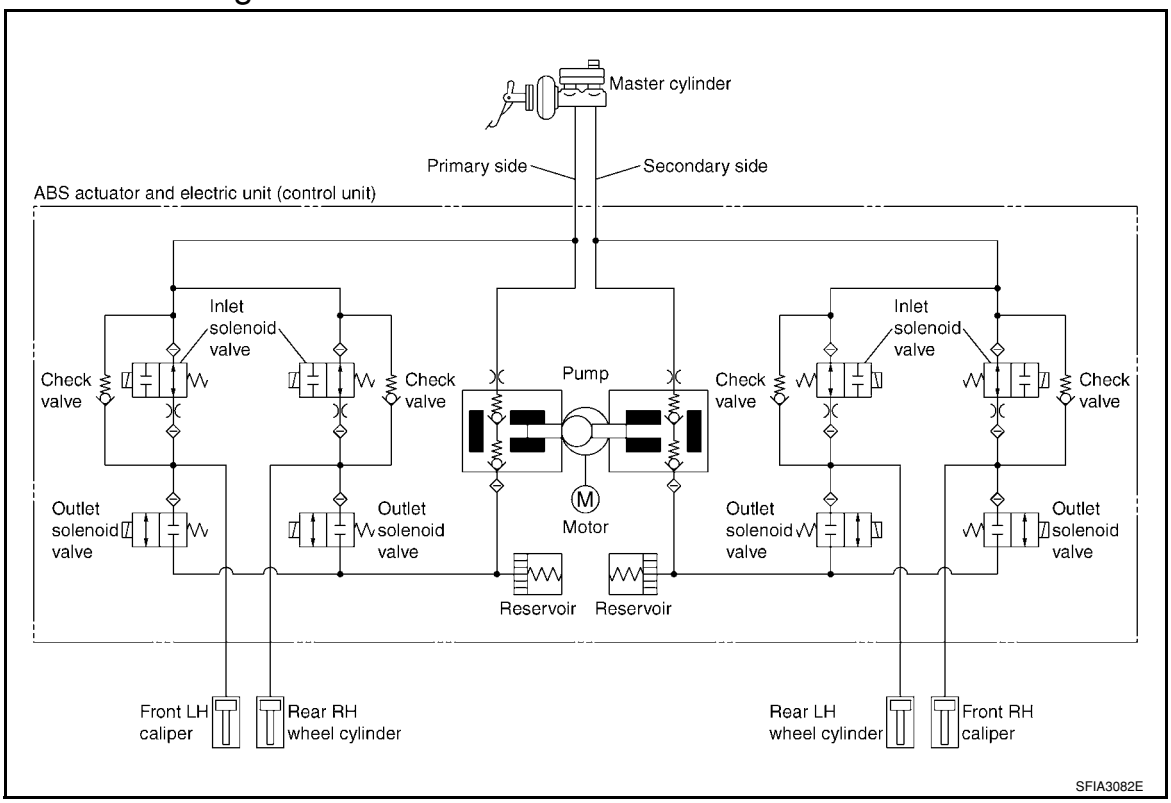

CAN COMMUNICATION

System Description

INFOID:0000000001703830

Refer to LAN-6, "System Description".

TROUBLE DIAGNOSIS

How to Perform Trouble Diagnosis for Quick and Accurate Repair

INFOID:0000000001703831

INTRODUCTION

The ABS system has an electronic control unit to control major functions. The control unit accepts input signals from sensors and controls actuator operation. It is also important to check for air leaks in the booster or brake and vacuum lines, lack of brake fluid, or other malfunctions in the brake system.

It is much more difficult to diagnose a malfunction that occurs intermittently rather than continuously. Most intermittent conditions are caused by poor electrical connections or damaged wiring. In this case, careful checking of suspicious circuits may help prevent the replacement of good parts.

A visual check only may not find the cause of the malfunction, so a road test should be performed.

Before undertaking actual checks, take just a few minutes to talk with a customer who approaches with an ABS complaint. The customer is a very good source of information, especially for intermittent conditions. Through the talks with the customer, find out what symptoms are present and under what conditions they occur.

Start your diagnosis by looking for “conventional” malfunctions first. This is one of the best ways to troubleshoot brake malfunctions on an ABS equipped vehicle. Also check related Service Bulletins for information.

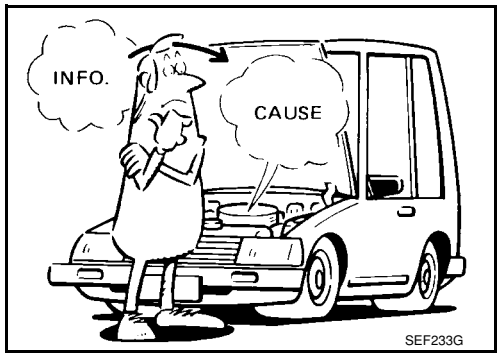

SEF233G

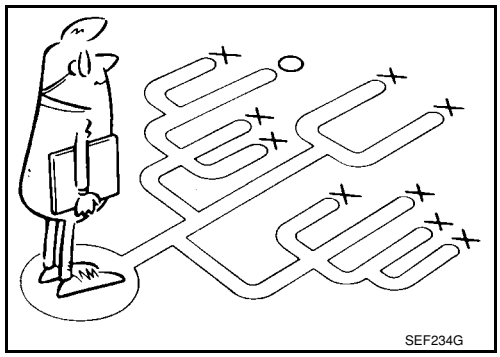
SEF234G

WORK FLOW

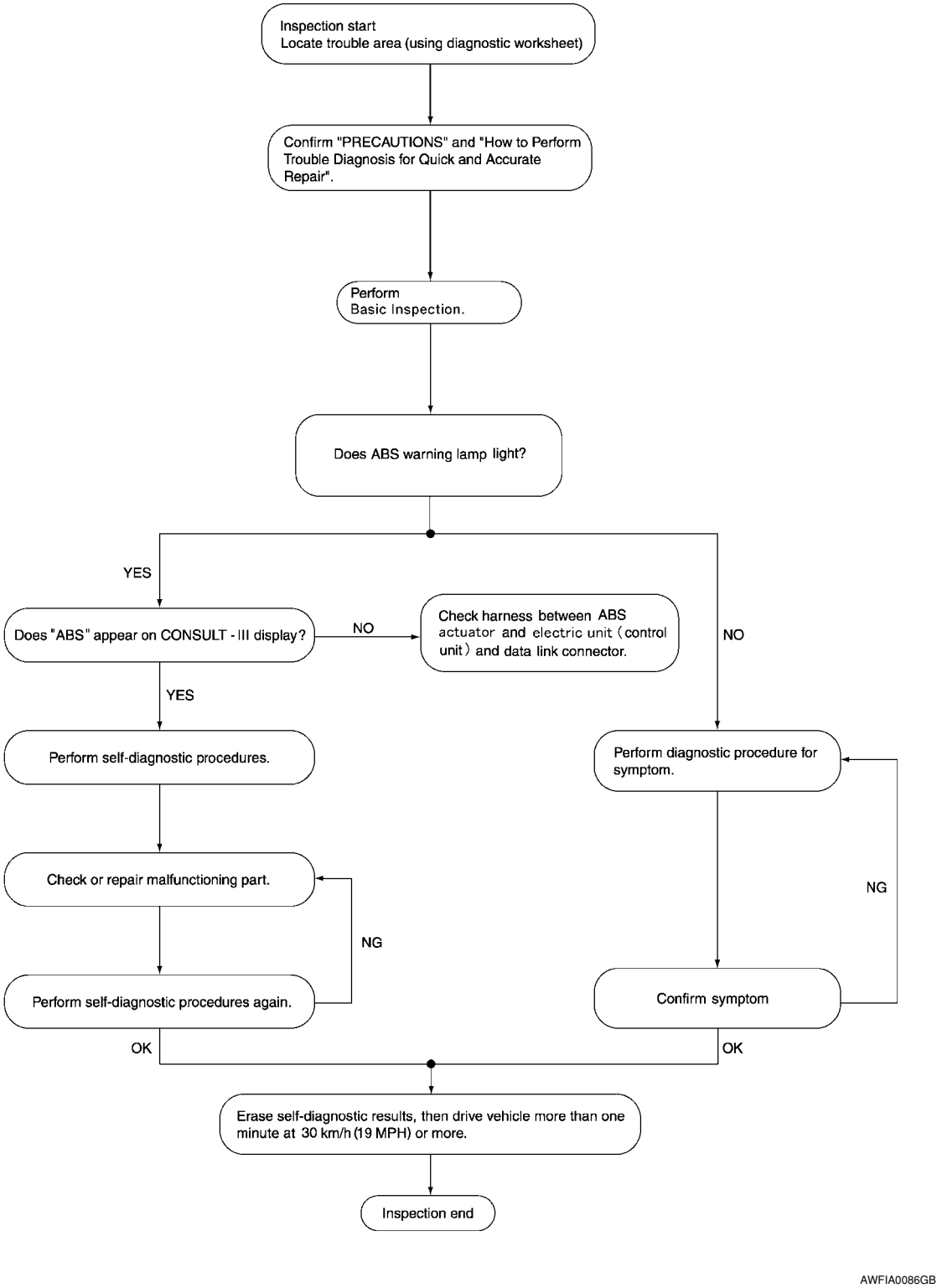

CLARIFY CONCERN

- A customer's description of a vehicle concern may vary depending on the individual. It is important to clarify the customer's concern.
- Ask the customer about what symptoms are present under what conditions. Use this information to reproduce the symptom while driving.
- It is also important to use the diagnosis sheet to understand what type of symptoms the customer is experiencing.

KEY POINTS

WHAT ..... Vehicle model
WHEN ..... Date, Frequencies
WHERE ..... Road conditions
HOW ..... Operating conditions, Weather conditions, Symptoms

SBR339B

EXAMPLE OF DIAGNOSIS SHEET

Customer name MR/MS	Model & Year		VIN
Engine #	Trans.		Mileage
Incident Date	Manuf. Date		In Service Date
Symptoms	☐ Noise and vibration (from engine compartment) ☐ Noise and vibration (from axle)	☐ Warning / Indicator activate	☐ Firm pedal operation Large stroke pedal operation
	☐ ABS does not work (Wheels lock when braking)	☐ Lack of sense of acceleration	
Engine conditions	☐ When starting ☐ After starting		
Road conditions	☐ Low friction road (☐Snow ☐Gravel ☐Other) ☐ Bumps / potholes		
Driving conditions	☐ Full-acceleration ☐ High speed cornering ☐ Vehicle speed: Greater than 10 km/h (6 MPH) ☐ Vehicle speed: 10 km/h (6 MPH) or less ☐ Vehicle is stopped		
Applying brake conditions	☐ Suddenly ☐ Gradually		
Other conditions	☐ Operation of electrical equipment ☐ Shift change ☐ Other descriptions		

SFIA3264E

Component Parts and Harness Connector Location

INFOID:0000000001703832

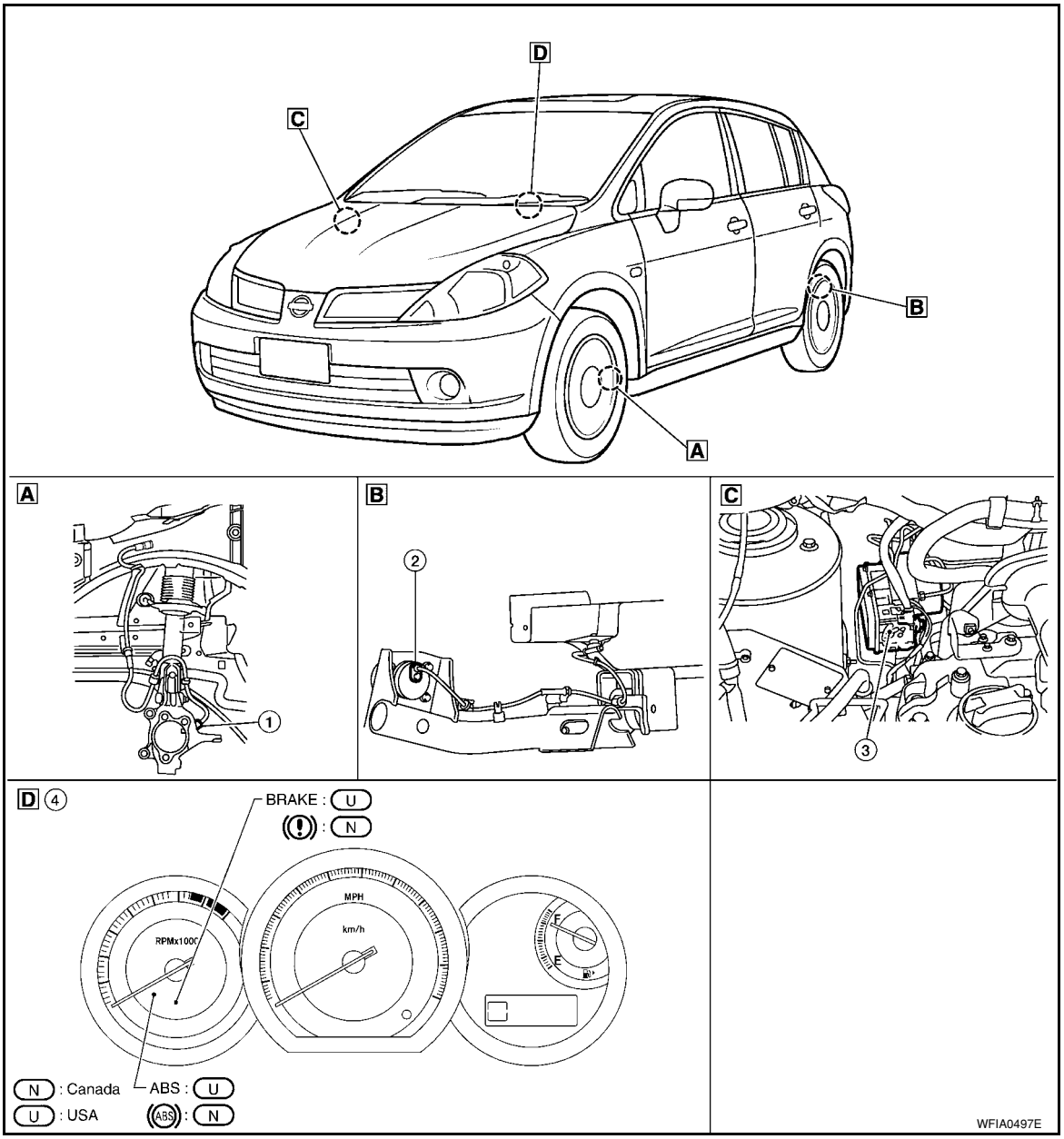

1. Front wheel sensor
   LH E51
   RH E52
2. Rear wheel sensor
   LH B123
   RH B124
3. ABS actuator and electric unit (control unit) E33
4. Combination meter M24

Schematic

INFOID:0000000001703833

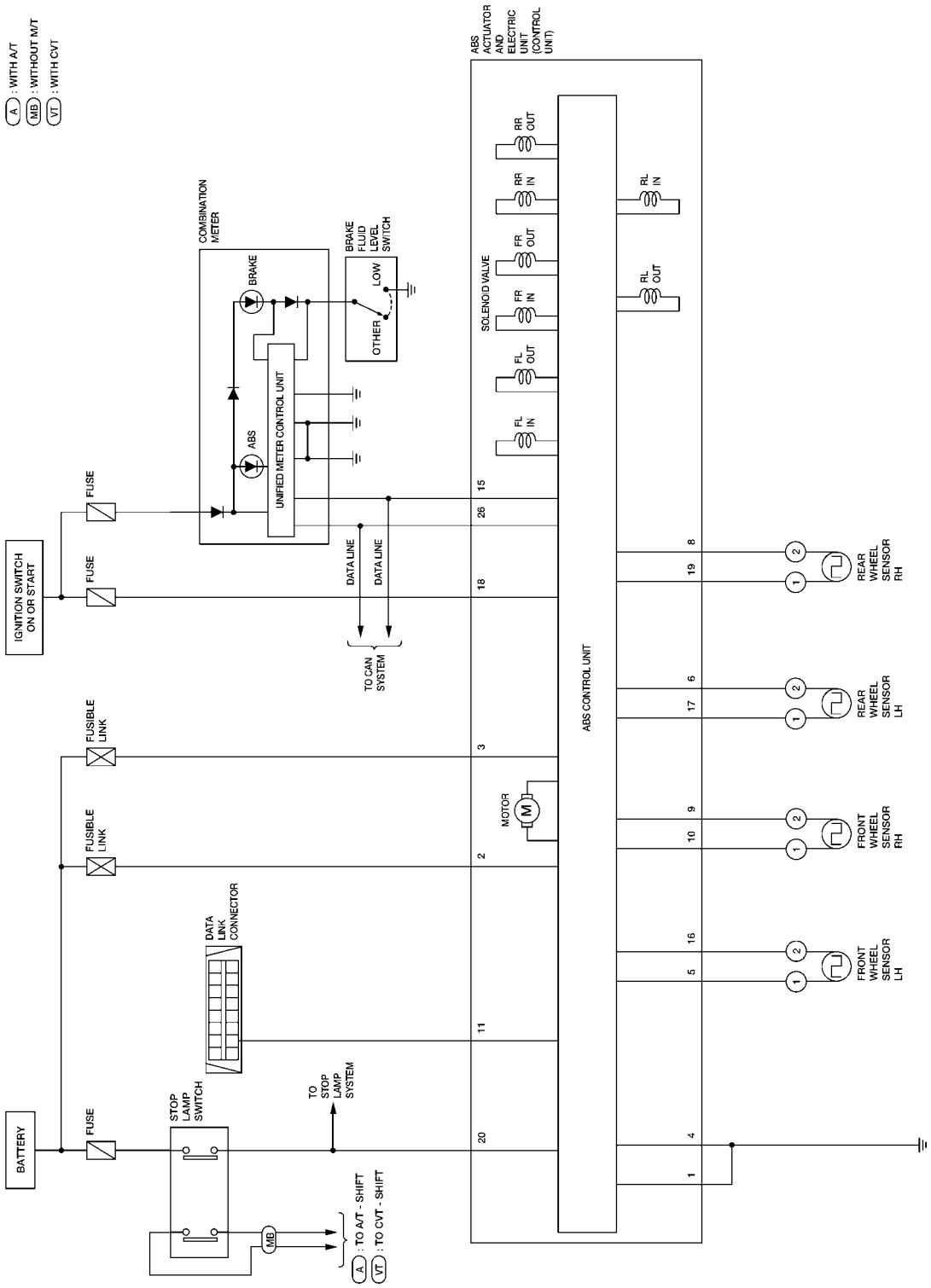

WFWA0418E

Wiring Diagram - ABS -

INFOID:0000000001703834

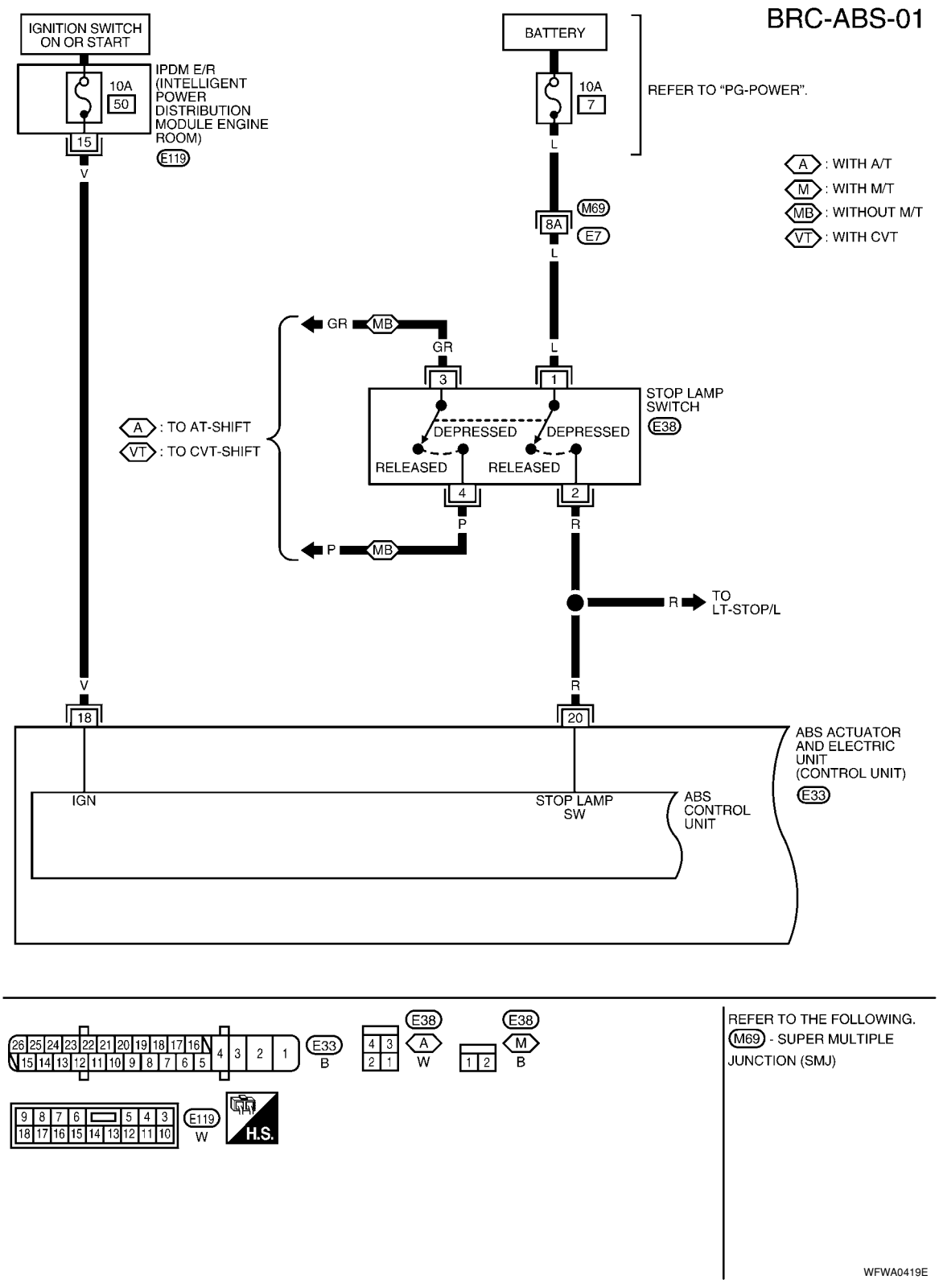

BRC-ABS-02

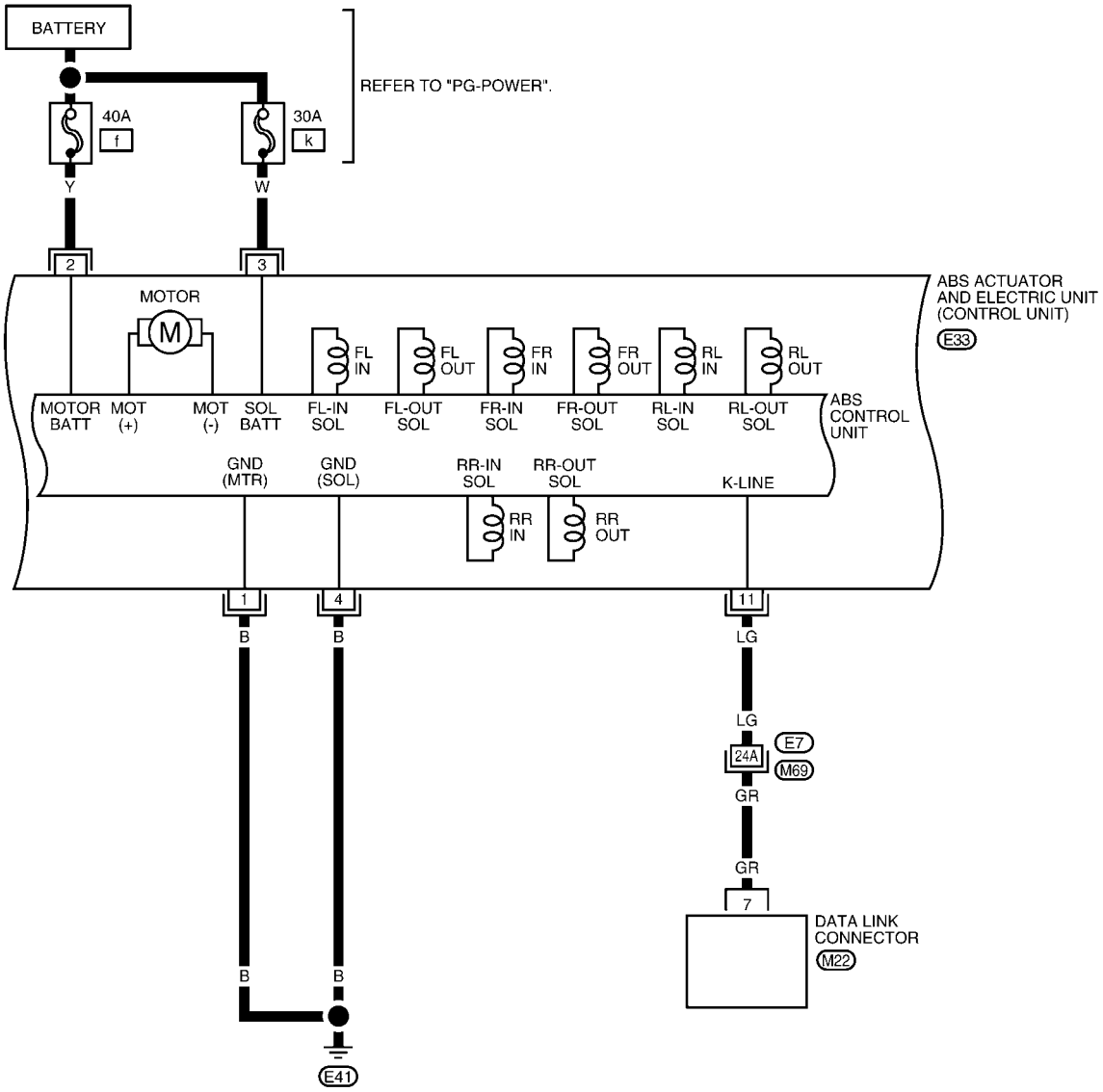

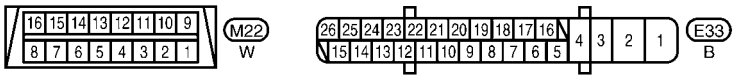

REFER TO THE FOLLOWING.
M69 - SUPER MULTIPLE JUNCTION (SMJ)

WFWA0420E

BRC-ABS-03

: DATA LINE

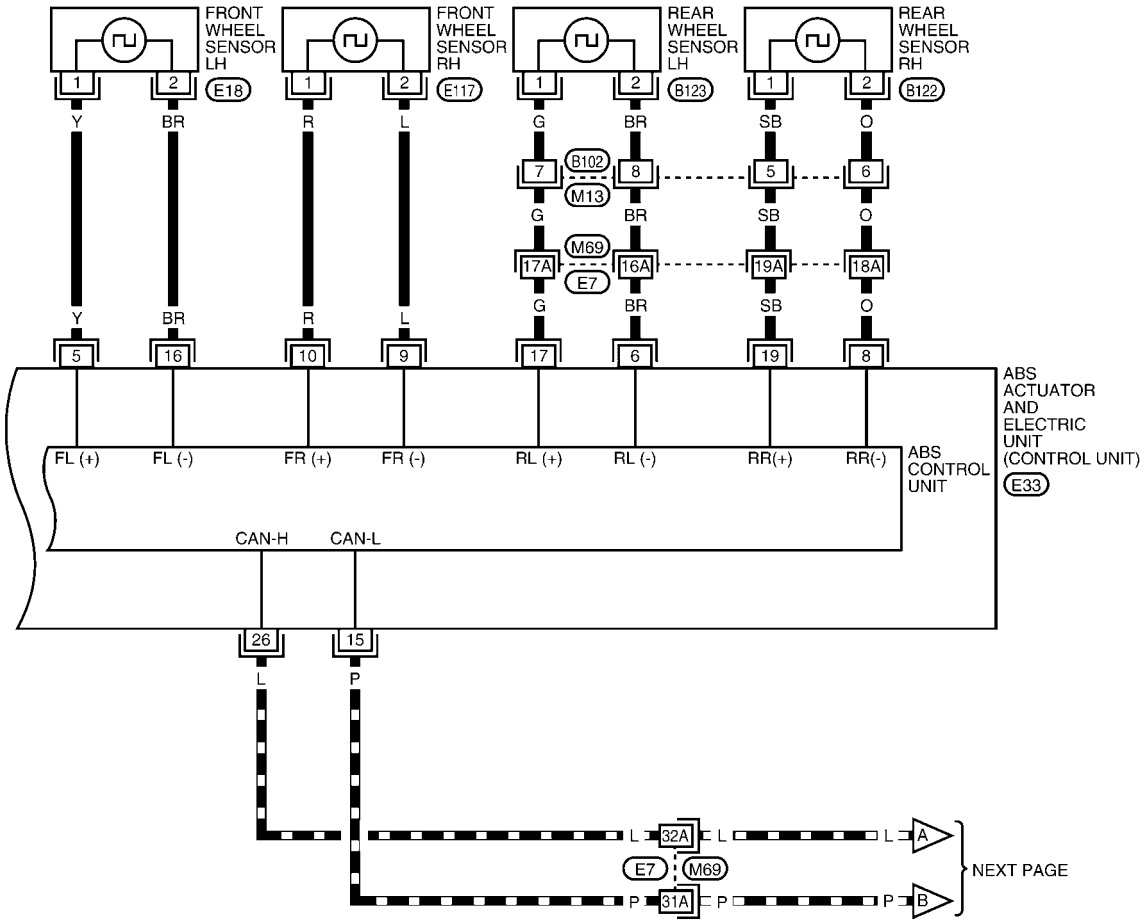

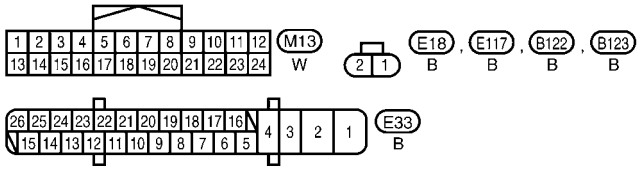

REFER TO THE FOLLOWING.
M69 - SUPER MULTIPLE JUNCTION (SMJ)

WFWA0421E

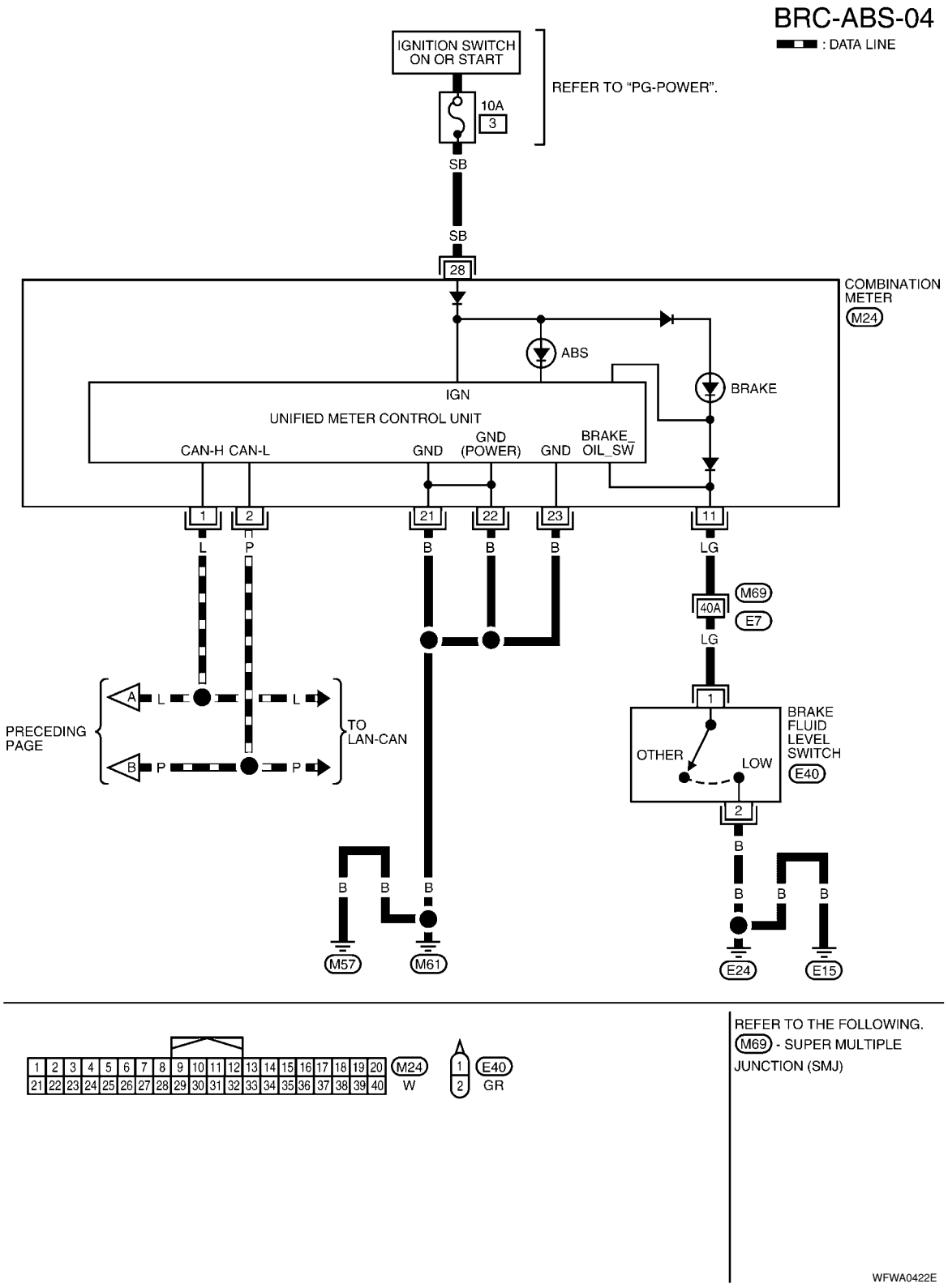

Basic Inspection

INFOID:0000000001703835

BRAKE FLUID LEVEL, FLUID LEAK, AND BRAKE PAD INSPECTION

1. Check fluid level in the brake fluid reservoir. If fluid level is low, add fluid.
2. Check the brake piping and around the ABS actuator and electric unit (control unit) for leaks. If there is leaking or seeping fluid, check the following items.

- If ABS actuator and electric unit (control unit) connection is loose, tighten the piping to the specified torque and recheck for leaks.
- If there is damage to the connection flare nut or ABS actuator and electric unit (control unit) threads, replace the damaged part and recheck for leaks.
- When there is fluid leaking or seeping from a fluid connection, use a clean cloth to wipe off the fluid and recheck for leaks. If fluid is still seeping out, replace the damaged part. If the fluid is leaking at the ABS actuator and electric unit (control unit), replace the ABS actuator and electric unit (control unit) assembly.

  CAUTION:
  The ABS actuator and electric unit (control unit) cannot be disassembled and must be replaced as an assembly.

3. Check the brake pads for excessive wear.

POWER SYSTEM TERMINAL LOOSENESS AND BATTERY INSPECTION

Make sure the battery positive cable, negative cable and ground connection are not loose. In addition, make sure the battery is sufficiently charged.

ABS WARNING LAMP INSPECTION

1. Make sure ABS warning lamp turns on for approximately 2 seconds when the ignition switch is turned ON. If it does not, check CAN communications. If there are no errors with the CAN communication system, replace the combination meter. Refer to IP-11, "Removal and Installation".
2. Make sure the lamp turns off approximately 2 seconds after the ignition switch is turned ON. If the lamp does not turn off, conduct self-diagnosis of ABS actuator and electric unit (control unit). If no malfunctions are detected in self-diagnosis, replace combination meter. Refer to IP-11, "Removal and Installation".
3. After conducting the self-diagnosis, be sure to erase the error memory. Refer to BRC-18, "CONSULT-III Function (ABS)".

Warning Lamp and Indicator Timing

INFOID:0000000001703836

Condition	ABS warning lamp	BRAKE warning lamp [Note 1]	Remarks
When the ignition switch is OFF	–	–	–
After the ignition switch is turned ON for approx. 1 second	×	×	–
After the ignition switch is turned ON for approx. 2 seconds	–	–	Lamp goes off approx. 2 seconds after the engine is started.
ABS malfunction	×	–	–
EBD malfunction	×	×	–

Note 1: Brake warning lamp will turn on when the parking brake is applied or when the brake fluid level is low.

x: ON

–: OFF

Control Unit Input/Output Signal Standard

INFOID:0000000001703837

REFERENCE VALUE FROM CONSULT-III

CAUTION:
The display shows the control unit calculation data, so a normal value might be displayed even in the event the output circuit (harness) is open or short circuited.

Monitor item	Display content	Data monitor		Note: Error inspection checklist
		Condition	Reference value in normal operation	
FR RH SENSOR FR LH SENSOR RR RH SENSOR RR LH SENSOR	Wheel speed	Vehicle stopped	0 [km/h (MPH)]	BRC-24, "Wheel Sensor System"
		Vehicle running (Note 1)	Almost in accordance with speedometer display (within ±10%)	
BATTERY VOLT	Battery voltage supplied to ABS actuator and electric unit (control unit)	Ignition switch ON	10 to 16V	BRC-27, "ABS Control Unit Power and Ground Systems Inspection"
STOP LAMP SW	Stop lamp switch operation	Brake pedal depressed	ON	—
		Brake pedal not depressed	OFF	
ABS WARN LAMP	ABS warning lamp ON condition (Note 2)	ABS warning lamp ON	ON	BRC-16, "Basic Inspection"
		ABS warning lamp OFF	OFF	
MOTOR RELAY	Operation status of motor and motor relay	Ignition switch ON or running (ABS not activated)	OFF	BRC-26, "Actuator Motor, Motor Relay, and Circuit Inspection"
		Ignition switch ON or engine running (ABS activated)	ON	
ACTUATOR RLY	Actuator relay operation status	Vehicle stopped (Ignition switch ON)	OFF	BRC-26, "Actuator Motor, Motor Relay, and Circuit Inspection"
		Vehicle stopped (Engine running)	ON	
FR LH IN SOL FR LH OUT SOL FR RH IN SOL FR RH OUT SOL RR RH IN SOL RR RH OUT SOL RR LH IN SOL RR LH OUT SOL	Solenoid valve operation	Actuator (solenoid) is active (“ACTIVE TEST” with CONSULT-III) or actuator relay is inactive (in fail-safe mode).	ON	BRC-25, "Solenoid Valve System Inspection"
		When actuator (solenoid) is not active and actuator relay is active (ignition switch ON).	OFF	
ABS SIGNAL EBD SIGNAL	Signal status	ABS active EBD active	ON	ABS system EBD system
		ABS not active EBD not active	OFF	
ABS FAIL SIG EBD FAIL SIG	Fail signal status	ABS fail EBD fail	ON	ABS system EBD system
		ABS normal EBD normal	OFF	

Note 1: Confirm tire pressure is normal.

Note 2: ON/OFF timing of ABS warning lamp

ON: For approximately 2 seconds after ignition switch is turned ON, or when a malfunction is detected.

OFF: Approximately 2 seconds after ignition switch is turned ON (when system is in normal operation).

CONSULT-III Function (ABS)

INFOID:0000000001703838

CONSULT-III can display each diagnostic item using the diagnostic test modes shown following.

ABS diagnostic mode	Description
SELF-DIAG RESULTS	Displays ABS actuator and electric unit (control unit) self-diagnosis results.
DATA MONITOR	Displays ABS actuator and electric unit (control unit) input/output data in real time.
CAN DIAG SUPPORT MNTR	The result of transmit/receive diagnosis of CAN communication can be read.
ACTIVE TEST	Operation of electrical loads can be checked by sending drive signal to them.

ABS diagnostic mode	Description
FUNCTION TEST	Conducted by CONSULT-III instead of a technician to determine whether each system is "OK" or "NG".
ECU PART NUMBER	ABS actuator and electric unit (control unit) part number can be read.

SELF-DIAGNOSIS

Description

If an error is detected in the system, the ABS warning lamp will turn on. In this case, perform self-diagnosis as follows:

Operation Procedure

1. Turn ignition switch OFF.
2. Connect CONSULT-III to the data link connector.
3. Turn ignition switch ON.
4. Start engine and drive at approximately 30 km/h (19 MPH) or more for approximately 1 minute.
5. After stopping the vehicle, with the engine running, touch “ABS”, “SELF-DIAG RESULTS” in order on the CONSULT-III screen.
6. The self-diagnostic results are displayed. (If necessary, the self-diagnostic results can be printed out by touching “PRINT”.)
   - When “NO DTC IS DETECTED” is displayed, check the ABS warning lamp.
7. Conduct the appropriate inspection from the display item list, and repair or replace the malfunctioning component.
8. Start engine and drive at approximately 30 km/h (19 MPH) or more for approximately 1 minute.
   CAUTION:
   - **When a wheel sensor “short-circuit” is detected, if the vehicle is not driven at 30 km/h (19 MPH) for at least 1 minute, the ABS warning lamp will not turn off even if the malfunction is repaired.**
9. Turn ignition switch OFF to prepare for erasing the memory.
10. Start the engine and touch “ABS”, “SELF-DIAG RESULTS”, “ERASE” in order on the CONSULT-III screen to erase the error memory.
    If “ABS” is not indicated, go to GI-36, "CONSULT-III Data Link Connector (DLC) Circuit".
    CAUTION:
    If the error memory is not erased, re-conduct the operation from step 5.
11. For the final inspection, drive at approximately 30 km/h (19 MPH) or more for approximately 1 minute and confirm that the ABS warning lamp is off.

Display Item List

Self-diagnostic item	Malfunction detecting condition	Check system
RR RH SENSOR-1 [C1101]	Circuit of rear RH wheel sensor is open.	BRC-24, "Wheel Sensor System" (Note 1)
RR LH SENSOR-1 [C1102]	Circuit of rear LH wheel sensor is open.	
FR RH SENSOR-1 [C1103]	Circuit of front RH wheel sensor is open.	
FR LH SENSOR-1 [C1104]	Circuit of front LH wheel sensor is open.	
RR RH SENSOR-2 [C1105]	When the circuit in the rear RH wheel sensor is short-circuited or when the sensor power voltage is outside the standard. When the distance between the wheel sensor and sensor rotor is too large and the sensor pulse cannot be recognized by the control unit.	
RR LH SENSOR-2 [C1106]	When the circuit in the rear LH wheel sensor is short-circuited or when the sensor power voltage is outside the standard. When the distance between the wheel sensor and sensor rotor is too large and the sensor pulse cannot be recognized by the control unit.	
FR RH SENSOR-2 [C1107]	When the circuit in the front RH wheel sensor is short-circuited or when the sensor power voltage is outside the standard. When the distance between the wheel sensor and sensor rotor is too large and the sensor pulse cannot be recognized by the control unit.	
FR LH SENSOR-2 [C1108]	When the circuit in the front LH wheel sensor is short-circuited or when the sensor power voltage is outside the standard. When the distance between the wheel sensor and sensor rotor is too large and the sensor pulse cannot be recognized by the control unit.	
ABS SENSOR [ABNORMAL SIGNAL] [C1115]	Wheel sensor input is abnormal.	
BATTERY VOLTAGE [ABNORMAL] [C1109]	ABS actuator and electric unit (control unit) power voltage is too low.	BRC-27, "ABS Control Unit Power and Ground Systems Inspection"
CONTROLLER FAILURE [C1110]	Internal malfunction of ABS actuator and electric unit (control unit)	BRC-25, "ABS Control Unit Inspection"
PUMP MOTOR [C1111]	During actuator motor operation with ON, when actuator motor turns OFF or when control line for actuator motor relay is open.	BRC-26, "Actuator Motor, Motor Relay, and Circuit Inspection"
	During actuator motor operation with OFF, when actuator motor turns ON or when control line for relay is shorted to ground.	
FR LH IN ABS SOL [C1120]	Circuit of front LH IN ABS solenoid is open or shorted, or control line is open or shorted to power supply or ground.	BRC-25, "Solenoid Valve System Inspection"
FR LH OUT ABS SOL [C1121]	Circuit of front LH OUT ABS solenoid is open or shorted, or control line is open or shorted to power supply or ground.	
FR RH IN ABS SOL [C1122]	Circuit of front RH IN ABS solenoid is open or shorted, or control line is open or shorted to power supply or ground.	
FR RH OUT ABS SOL [C1123]	Circuit of front RH OUT ABS solenoid is open or shorted, or control line is open or shorted to power supply or ground.	
RR LH IN ABS SOL [C1124]	Circuit of rear LH IN ABS solenoid is open or shorted, or control line is open or shorted to power supply or ground.	
RR LH OUT ABS SOL [C1125]	Circuit of rear LH OUT ABS solenoid is open or shorted, or control line is open or shorted to power supply or ground.	
RR RH IN ABS SOL [C1126]	Circuit of rear RH IN ABS solenoid is open or shorted, or control line is open or shorted to power supply or ground.	
RR RH OUT ABS SOL [C1127]	Circuit of rear RH OUT ABS solenoid is open or shorted, or control line is open or shorted to power supply or ground.	

Self-diagnostic item	Malfunction detecting condition	Check system
MAIN RELAY [C1114]	ABS actuator relay or circuit malfunction.	BRC-26, "Actuator Motor, Motor Relay, and Circuit Inspection"
CAN COMM CIRCUIT [U1000]	• CAN communication line is open or shorted. • ABS actuator and electric unit (control unit) internal malfunction • Battery voltage for ECM is suddenly interrupted for approximately 0.5 second or more.	BRC-28, "CAN Communication System Inspection" (Note 2)

Note 1: If wheel sensor 2 for each wheel is indicated, check ABS actuator and electric unit (control unit) power supply voltage in addition to wheel sensor circuit check.

Note 2: If multiple malfunctions are detected including CAN communication line [U1000], perform diagnosis for CAN communication line first.

DATA MONITOR

Operation Procedure

1. After turning OFF the ignition switch, connect CONSULT-III to the data link connector.
2. Touch “ABS”, “DATA MONITOR” in order on the CONSULT-III screen.
   If “ABS” is not indicated, go to GI-36, "CONSULT-III Data Link Connector (DLC) Circuit".
3. Return to the SELECT MONITOR ITEM screen, and touch “ECU INPUT SIGNALS”, “MAIN SIGNALS” or “SELECTION FROM MENU”. Refer to the following information.
4. When “START” is touched, the data monitor screen is displayed.

Display Item List

Item (Unit)	Data monitor item selection			Remarks
	ECU INPUT SIGNALS	MAIN SIGNALS	SELECTION FROM MENU	
FR RH SENSOR (km/h, MPH)	×	×	×	Wheel speed calculated by front RH wheel sensor signal is displayed.
FR LH SENSOR (km/h, MPH)	×	×	×	Wheel speed calculated by front LH wheel sensor signal is displayed.
RR RH SENSOR (km/h, MPH)	×	×	×	Wheel speed calculated by rear RH wheel sensor signal is displayed.
RR LH SENSOR (km/h, MPH)	×	×	×	Wheel speed calculated by rear LH wheel sensor signal is displayed.
BATTERY VOLT (V)	×	×	×	Voltage supplied to ABS actuator and electric unit (control unit) is displayed.
STOP LAMP SW (ON/OFF)	×	×	×	Stop lamp switch (ON/OFF) status is displayed.
ABS WARN LAMP (ON/OFF)	–	×	×	ABS warning lamp (ON/OFF) status is displayed.
FR LH IN SOL (ON/OFF)	–	×	×	Front LH IN ABS solenoid (ON/OFF) status is displayed.
FR LH OUT SOL (ON/OFF)	–	×	×	Front LH OUT ABS solenoid (ON/OFF) status is displayed.
FR RH IN SOL (ON/OFF)	–	×	×	Front RH IN ABS solenoid (ON/OFF) status is displayed.
FR RH OUT SOL (ON/OFF)	–	×	×	Front RH OUT ABS solenoid (ON/OFF) status is displayed.
RR LH IN SOL (ON/OFF)	–	×	×	Rear LH IN ABS solenoid (ON/OFF) status is displayed.
RR LH OUT SOL (ON/OFF)	–	×	×	Rear LH OUT ABS solenoid (ON/OFF) status is displayed.

Item (Unit)	Data monitor item selection			Remarks
	ECU INPUT SIGNALS	MAIN SIGNALS	SELECTION FROM MENU	
RR RH IN SOL (ON/OFF)	–	×	×	Rear RH IN ABS solenoid (ON/OFF) status is displayed.
RR RH OUT SOL (ON/OFF)	–	×	×	Rear RH OUT ABS solenoid (ON/OFF) status is displayed.
MOTOR RELAY (ON/OFF)	–	×	×	ABS motor relay signal (ON/OFF) status is displayed.
ACTUATOR RLY (ON/OFF)	–	×	×	ABS actuator relay signal (ON/OFF) status is displayed.
ABS FAIL SIG (ON/OFF)	–	–	×	ABS fail signal (ON/OFF) status is displayed.
EBD FAIL SIG (ON/OFF)	–	–	×	EBD fail signal (ON/OFF) status is displayed.
EBD SIGNAL (ON/OFF)	–	–	×	EBD operation (ON/OFF) status is displayed.
ABS SIGNAL (ON/OFF)	–	–	×	ABS operation (ON/OFF) status is displayed.

×: Applicable

–: Not applicable

ACTIVE TEST

CAUTION:

- **Do not perform active test while driving.**
- **Make sure to completely bleed air from the brake system.**
- **The ABS and brake warning lamps turn on during the active test.**

Operation Procedure

1. Connect the CONSULT-III to the data link connector and start the engine.
2. Touch “ABS”.
   If “ABS” is not indicated, go to GI-36, "CONSULT-III Data Link Connector (DLC) Circuit".
3. Touch “ACTIVE TEST”.
4. The SELECT TEST ITEM screen is displayed.
5. Touch necessary test item.
6. With the “MAIN SIGNALS” display selected, touch “START”.
7. The Active Test screen will be displayed, so conduct the following test.

Solenoid Valve Operation Chart

TEST ITEM	CONDITION	JUDGEMENT		
FR RH SOL FR LH SOL RR RH SOL RR LH SOL	Ignition switch is turned ON.	Brake fluid pressure control operation		
			IN SOL	OUT SOL
		UP (Increase):	OFF	OFF
		KEEP (Hold):	ON	OFF
		DOWN (Decrease):	ON	ON

NOTE:

- If active test is performed with brake pedal depressed, pedal stroke may change. This is normal.
- “TEST IS STOPPED” is displayed approximately 10 seconds after operation starts.
- After “TEST IS STOPPED” is displayed, to perform test again, repeat Step 6.

ABS Motor

Touch “ON” and “OFF” on the screen. Check that ABS motor relay operates as shown in table below.

Operation	ON	OFF
ABS actuator relay	ON	ON
ABS motor relay	ON	OFF

NOTE:
- If active test is performed with brake pedal depressed, pedal stroke may change. This is normal.
- “TEST IS STOPPED” is displayed approximately 10 seconds after operation starts.

TROUBLE DIAGNOSIS FOR SELF-DIAGNOSTIC ITEMS

Wheel Sensor System

INFOID:0000000001703839

INSPECTION PROCEDURE

1. CONNECTOR INSPECTION

Disconnect the ABS actuator and electric unit (control unit) connector E33 and wheel sensor of malfunctioning code.
Check the terminals for deformation, disconnection, looseness or damage.

OK or NG

OK >> GO TO 2.
NG >> Repair or replace as necessary.

2. CHECK WHEEL SENSOR OUTPUT SIGNAL

1. Connect ABS active wheel sensor tester (J-45741) to wheel sensor using appropriate adapter.
2. Turn on the ABS active wheel sensor tester power switch.
   NOTE:
   The green POWER indicator should illuminate. If the POWER indicator does not illuminate, replace the battery in the ABS active wheel sensor tester before proceeding.
3. Spin the wheel of the vehicle by hand and observe the red SENSOR indicator on the ABS active wheel sensor tester. The red SENSOR indicator should flash on and off to indicate an output signal.
   NOTE:
   If the red SENSOR indicator illuminates but does not flash, reverse the polarity of the tester leads and retest.

Does the ABS active wheel sensor tester detect a signal?

YES >> GO TO 3.
NO >> Replace the wheel sensor. Refer to BRC-32, "Removal and Installation".

3. CHECK TIRES

Check for inflation pressure, wear and size of each tire. Refer to WT-25.

Are tire pressure and size correct and is tire wear within specifications?

YES >> GO TO 4.
NO >> Adjust tire pressure or replace tire(s).

4. CHECK WHEEL BEARINGS

Check wheel bearing axial end play. Refer to FAX-5, "On-Vehicle Inspection and Service" or RAX-4, "On-Vehicle Inspection and Service".

OK or NG

OK >> GO TO 5.
NG >> Repair or replace as necessary. Refer to FAX-5, "Removal and Installation" or RAX-4, "Removal and Installation".

5. CHECK WIRING HARNESS FOR SHORT CIRCUIT

1. Disconnect ABS actuator and electric unit (control unit) connector and wheel sensor connector of malfunction code No.
2. Check continuity between wheel sensor harness connector terminals and ground.

Continuity should not exist.

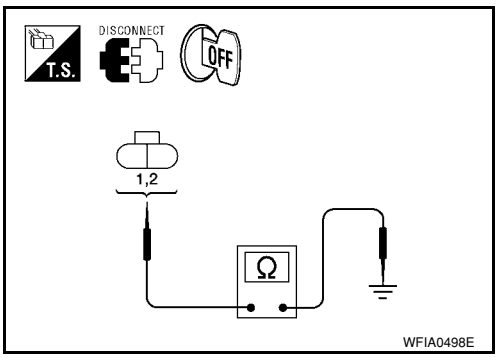

OK or NG

OK >> GO TO 6.
NG >> Repair the circuit.

6. CHECK WIRING HARNESS FOR OPEN CIRCUIT

Check continuity between ABS actuator and electric unit (control unit) harness connector and wheel sensor harness connector.

Wheel sensor	ABS actuator and electric unit (control unit)		Wheel sensor		Continuity
	Connector	Terminals	Connector	Terminals	
Front LH	E33	5	E51	1	Yes
		16		2	
Front RH		10	E52	1	
		9		2	
Rear LH		17	B123	1	
		6		2	
Rear RH		19	B124	1	
		8		2	

OK or NG

OK >> Replace the ABS actuator and electric unit (control unit). Refer to BRC-35, "Removal and Installation".

NG >> Repair the circuit.

ABS Control Unit Inspection

INFOID:0000000001703840

INSPECTION PROCEDURE

1.SELF-DIAGNOSIS RESULT CHECK

Check self-diagnosis results.

Self-diagnosis results
CONTROLLER FAILURE

Is the above displayed in the self-diagnosis display items?

YES >> Replace ABS actuator and electric unit (control unit). Refer to BRC-35, "Removal and Installation".

NO >> Inspection End.

Solenoid Valve System Inspection

INFOID:0000000001703841

INSPECTION PROCEDURE

1.SELF-DIAGNOSIS RESULT CHECK

Check self-diagnosis results.

Self-diagnosis results
FR LH IN ABS SOL
FR LH OUT ABS SOL
FR RH IN ABS SOL
FR RH OUT ABS SOL
RR LH IN ABS SOL
RR LH OUT ABS SOL
RR RH IN ABS SOL
RR RH OUT ABS SOL

Is the above displayed in the self-diagnosis display items?

YES >> GO TO 2.

NO >> Inspection End.

2. CONNECTOR INSPECTION

1. Disconnect ABS actuator and electric unit (control unit) connector E33.
2. Check the terminals for deformation, disconnection, looseness or damage.

OK or NG

OK >> GO TO 3.
NG >> Repair or replace as necessary.

3. CHECKING SOLENOID POWER AND GROUND

1. Check voltage between ABS actuator and electric unit (control unit) harness connector E33 and body ground.

ABS actuator and electric unit (control unit) harness connector E33	Body ground	Measured value (Approx.)
3	—	12V

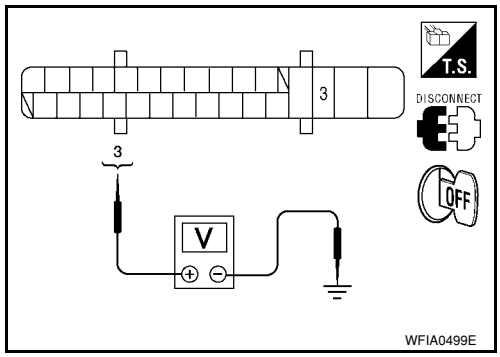

2. Check resistance between ABS actuator and electric unit (control unit) harness connector E33 and body ground.

ABS actuator and electric unit (control unit) harness connector E33	Body ground	Measured value (Approx.)
4	—	0Ω

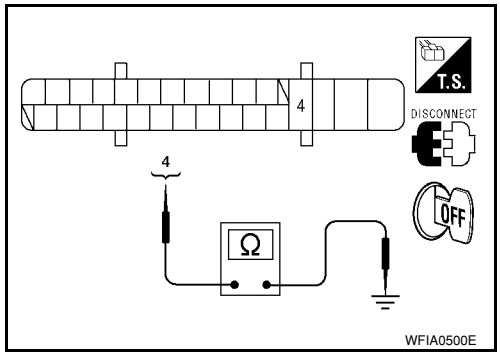

OK or NG

OK >> Perform self-diagnosis again. If the same results appear, replace ABS actuator and electric unit (control unit). Refer to BRC-35, "Removal and Installation".
NG >> Repair the circuit.

Actuator Motor, Motor Relay, and Circuit Inspection

INFOID:0000000001703842

INSPECTION PROCEDURE

1. CHECKING SELF-DIAGNOSIS RESULTS

Check self-diagnosis results.

Self-diagnosis results
PUMP MOTOR
MAIN RELAY

Is the above displayed in the self-diagnosis display items?

YES >> GO TO 2.
NO >> Inspection End.

2. CONNECTOR INSPECTION

1. Disconnect ABS actuator and electric unit (control unit) connector E33.
2. Check the terminals for deformation, disconnection, looseness or damage.

OK or NG

OK >> GO TO 3.
NG >> Repair or replace as necessary.

3. CHECKING ABS MOTOR AND MOTOR RELAY POWER SYSTEM

1. Check voltage between ABS actuator and electric unit (control unit) harness connector E33 and ground.

ABS actuator and electric unit (control unit) harness connector E33	Body ground	Measured value (Approx.)
2	—	12V

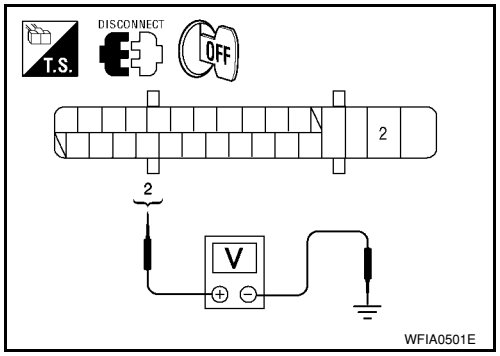

2. Check resistance between ABS actuator and electric unit (control unit) connector E33 and ground.

ABS actuator and electric unit (control unit) harness connector E33	Body ground	Measured value (Approx.)
1	—	0Ω

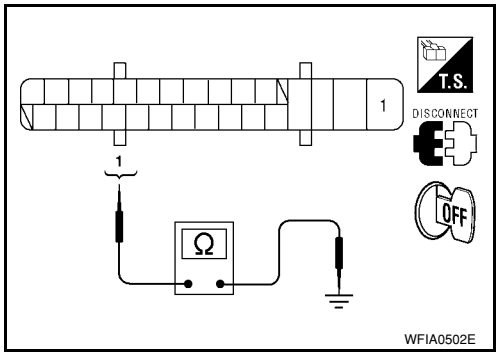

OK or NG

OK >> Perform self-diagnosis again. If the same results appear, replace ABS actuator and electric unit (control unit). Refer to BRC-35, "Removal and Installation".

NG >> Repair the circuit.

ABS Control Unit Power and Ground Systems Inspection

INFOID:0000000001703843

INSPECTION PROCEDURE

1. SELF-DIAGNOSIS RESULT CHECK

Check self-diagnosis results.

Self-diagnosis results
BATTERY VOLTAGE

Is the above displayed in the self-diagnosis display items?

YES >> GO TO 2.

NO >> Inspection End.

2. CONNECTOR INSPECTION

1. Disconnect the ABS actuator and electric unit (control unit) connector E33.
2. Check the terminals for deformation, disconnection, looseness or damage.

OK or NG

OK >> GO TO 3.

NG >> Repair or replace as necessary.

3. ABS CONTROL UNIT POWER AND GROUND CIRCUIT INSPECTION

Measure the voltage and continuity between the ABS actuator and electric unit (control unit) harness connector E33 and ground.

Signal name	ABS actuator and electric unit (control unit) harness connector E33	Body ground	Measured value
Power supply	2	—	Battery voltage (Approx. 12V)
	3		

Ground	1	—	Continuity should exist.
	4		

OK or NG

OK >> Check the battery for loose terminals, low voltage, etc. Repair as necessary.
NG >> Repair the circuit.

CAN Communication System Inspection

INFOID:0000000001703844

INSPECTION PROCEDURE

1. CHECK CONNECTOR

1. Turn ignition switch OFF, disconnect the ABS actuator and electric unit (control unit) connector and check the terminals for deformation, disconnection, looseness, and so on. If there is a malfunction, repair or replace the terminal.
2. Reconnect connector to perform self-diagnosis.

Is "CAN COMM CIRCUIT" displayed in self-diagnosis display items?

YES >> Print out the self-diagnostic results, and refer to LAN-15, "Trouble Diagnosis Flow Chart".
NO >> Connector terminal is loose, damaged, open, or shorted.

TROUBLE DIAGNOSES FOR SYMPTOMS

ABS Works Frequently

INFOID:0000000001703845

1. CHECK WARNING LAMP ACTIVATION

Make sure warning lamp remains off while driving.

OK or NG

OK >> GO TO 2.
NG >> Carry out self-diagnosis. Refer to BRC-18, "CONSULT-III Function (ABS)".

2. CHECK WHEEL SENSORS

Check the following.
- Wheel sensor mounting for looseness
- Wheel sensors for physical damage
- Wheel sensor connectors for terminal damage or loose connections
- Sensor rotor and mount for physical damage

OK or NG

OK >> GO TO 3.
NG >> Repair or replace as necessary.

3. CHECK WHEEL BEARINGS

Check wheel bearing axial end play. Refer to FAX-5, "On-Vehicle Inspection and Service" or RAX-4, "On-Vehicle Inspection and Service".

OK or NG

OK >> GO TO 4.
NG >> Repair as necessary.

4. CHECK BRAKE FLUID PRESSURE

Check brake fluid pressure distribution.
Refer to BRC-16, "Basic Inspection".

Is brake fluid pressure distribution normal?

YES >> Inspection End.
NO >> Perform Basic Inspection. Refer to BRC-16, "Basic Inspection".

Unexpected Pedal Action

INFOID:0000000001703846

1. CHECK WARNING LAMP ACTIVATION

Make sure warning lamp remains off while driving.

OK or NG

OK >> GO TO 2.
NG >> Carry out self-diagnosis. Refer to BRC-18, "CONSULT-III Function (ABS)".

2. CHECK BRAKE PEDAL STROKE

Check brake pedal stroke.

Is brake pedal stroke excessive?

YES >> Perform Basic Inspection. Refer to BRC-16, "Basic Inspection".
NO >> GO TO 3.

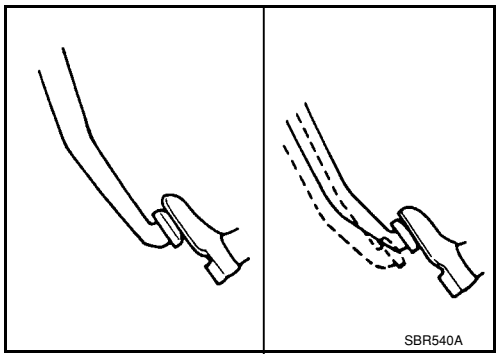

3. CHECK CONNECTOR AND BRAKING PERFORMANCE

1. Disable ABS by disconnecting ABS actuator and electric unit (control unit) connector.

2. Drive vehicle and check brake operation.
   NOTE:
   - Stopping distance may be longer than vehicles without ABS when road condition is slippery.
   - Driving the vehicle with the ABS actuator and electric unit (control unit) disconnected may induce DTCs in electrical control units using CAN communication. After the inspection, clear all DTCs. Refer to LAN-6, "System Description".

OK or NG

OK >> GO TO 4.
NG >> Perform Basic Inspection. Refer to BRC-16, "Basic Inspection".

4. CHECK WHEEL SENSORS

Check the following.
- Wheel sensor mounting for looseness
- Wheel sensors for physical damage
- Wheel sensor connectors for terminal damage or loose connections
- Sensor rotor and mount for physical damage

OK or NG

OK >> Check ABS actuator and electric unit (control unit) connector terminals for deformation, disconnection, looseness or damage. Reconnect ABS actuator and electric unit (control unit) harness connector. Then retest.
NG >> Repair or replace as necessary.

Long Stopping Distance

INFOID:0000000001703847

1. CHECK BASE BRAKING SYSTEM PERFORMANCE

1. Disable ABS by disconnecting ABS actuator and electric unit (control unit) connector.
2. Drive vehicle and check brake operation.
   NOTE:
   - Stopping distance may be longer than vehicles without ABS when road condition is slippery.
   - Driving the vehicle with the ABS actuator and electric unit (control unit) disconnected may induce DTCs in electrical control units using CAN communication. After the inspection, clear all DTCs. Refer to LAN-6, "System Description".

OK or NG

OK >> Go to BRC-29, "ABS Works Frequently".
NG >> Perform Basic Inspection. Refer to BRC-16, "Basic Inspection".

ABS Does Not Work

INFOID:0000000001703848

CAUTION:
The ABS does not operate when the vehicle speed is 10 km/h (6 MPH) or less.

1. CHECK WARNING LAMP ACTIVATION

Turn ignition switch ON and check for warning lamp activation.
- Warning lamp should activate for approximately 2 seconds after turning the ignition switch ON.

OK or NG

OK >> Carry out self-diagnosis. Refer to BRC-18, "CONSULT-III Function (ABS)".
NG >> Go to BRC-16, "Basic Inspection".

Pedal Vibration or ABS Operation Noise

INFOID:0000000001703849

NOTE:
During ABS activation, pedal vibration may be felt and a noise may be heard. This is normal and does not indicate a malfunction.

1. CHECK SYMPTOM

1. Apply brake.
2. Start engine.

Does the symptom occur only when engine is started?

YES >> Carry out self-diagnosis. Refer to BRC-18, "CONSULT-III Function (ABS)".

NO >> GO TO 2.

2. RECHECK SYMPTOM

Does the symptom occur only when electrical equipment switches (such as headlamps) are turned on?

YES >> Check for radio, antenna or related wiring that is routed too close to the ABS actuator and electric unit (control unit) and reroute as necessary.

NO >> Go to BRC-29, "ABS Works Frequently".

WHEEL SENSORS

Removal and Installation

INFOID:0000000001703850

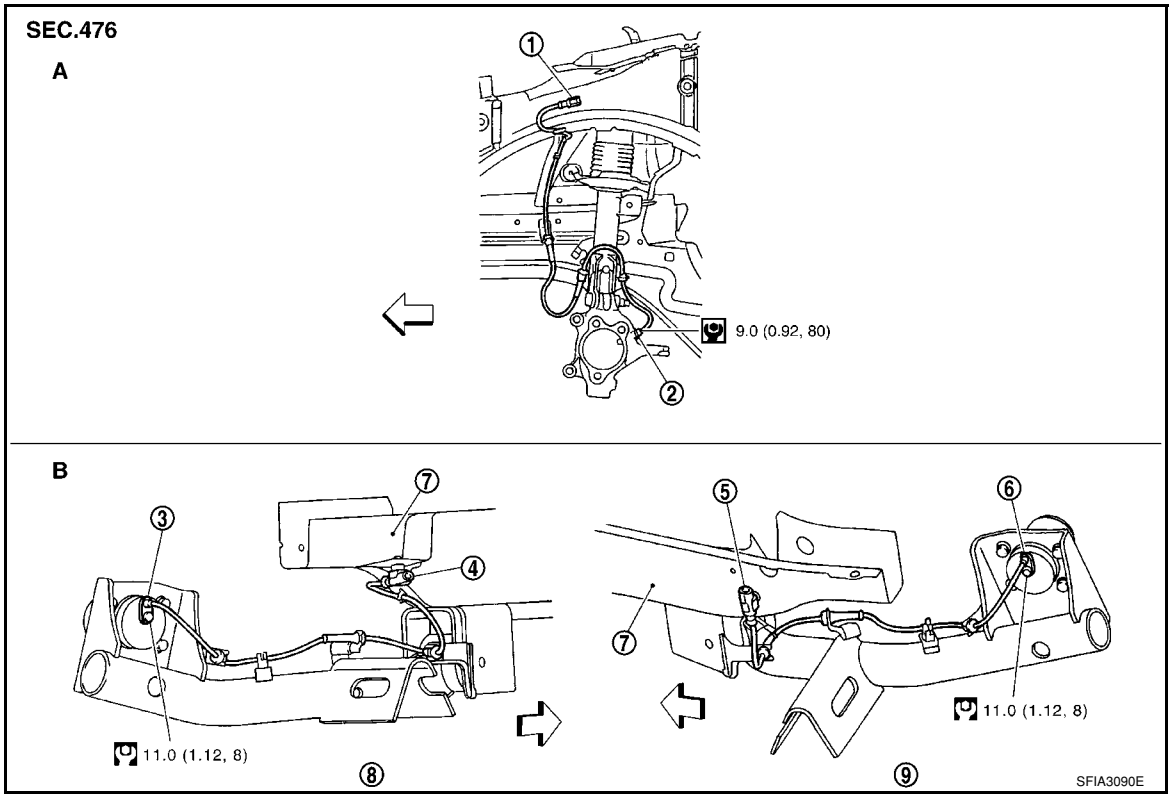

A.	Front	B.	Rear	1.	Front wheel sensor connector (LH)
2.	Front wheel sensor (LH)	3.	Rear wheel sensor (LH)	4.	Rear wheel sensor connector (LH)
5.	Rear wheel sensor connector (RH)	6.	Rear wheel sensor (RH)	7.	Side member
8.	Left	9.	Right	⇦	: Front

Refer to GI section for symbol marks in the figure.

NOTE:

The top portion of the figure (front side) shows view from LH side of vehicle. RH side is the mirror image.

REMOVAL

Pay attention to the following when removing wheel sensor.

CAUTION:

- **As much as possible, avoid rotating wheel sensor when removing it. Pull wheel sensors out without pulling on sensor harness.**
- **Take care to avoid damaging wheel sensor edges or rotor teeth. Remove wheel sensor first before removing front or rear wheel hub. This is to avoid damage to wheel sensor wiring and loss of sensor function.**

INSTALLATION

Pay attention to the following when installing wheel sensor. Tighten installation bolts and nuts to the specified torques.

- When installing, make sure there is no foreign material such as iron chips on and in the mounting hole of the wheel sensor. Make sure no foreign material has been caught in the sensor rotor. Remove any foreign material and clean the mount.
- When installing front wheel sensor, press rubber grommets of strut bracket and body all the way in until they get locked, and be careful not to apply a twist to harness. Harness should not be twisted after installation. (Install it with harness paint mark on body side grommet facing front of vehicle, and the strut side grommet facing outside of vehicle.)

- When installing rear wheel sensor, press rubber grommets of suspension arm bracket and harness of side member all the way in until they get locked, and be careful not to apply a twist to harness. Harness should not be twisted after installation. (Aim the paint mark upward of vehicle.)

SENSOR ROTOR

Removal and Installation

INFOID:0000000001703851

Sensor rotor cannot be disassembled. To replace sensor rotor, replace hub bearing assembly. Refer to FAX-5 in “FAX” section, refer to RAX-4 in “RAX” section.

ACTUATOR AND ELECTRIC UNIT (ASSEMBLY)

Removal and Installation

INFOID:0000000001703852

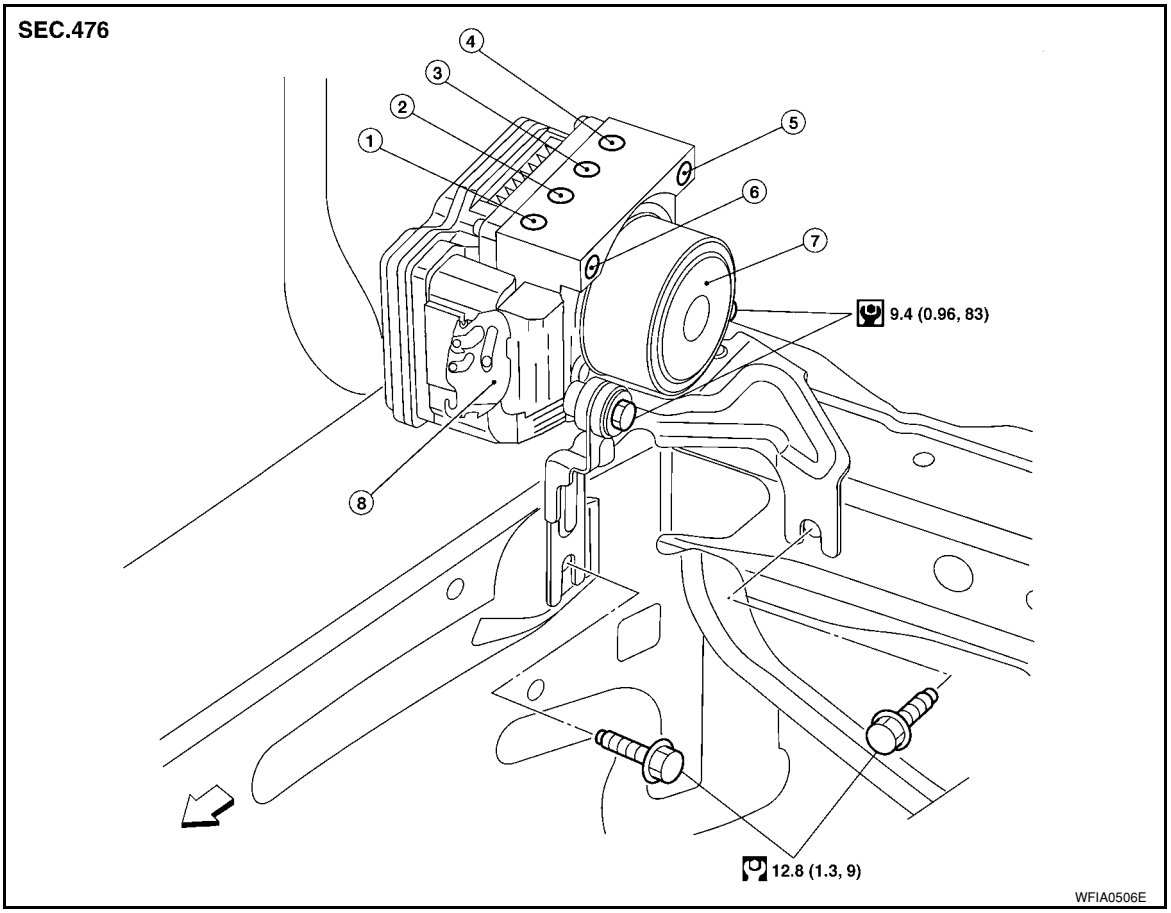

1.	To front right	2.	To rear left	3.	To rear right
4.	To front left	5.	From master cylinder primary side	6.	From master cylinder secondary side
7.	ABS actuator and electric unit (control unit)	8.	Harness connector	⇦	: Front

Refer to GI section for symbol marks in the figure.

CAUTION:
- **Before servicing, disconnect battery cables.**
- **To remove brake tube, use flare nut wrench to prevent flare nuts and brake tube from being damaged. To install, use flare nut torque wrench, tighten flare nut to the specified torque. Refer to BR-10, "Hydraulic Circuit" .**
- **Do not apply excessive impact to ABS actuator and electric unit (control unit), such as dropping it.**
- **Do not remove and install actuator by holding harness.**
- **After work is completed, bleed air from brake tube and hose. Refer to BR-8, "Bleeding Brake System" .**

REMOVAL

1. Disconnect ABS actuator and electric unit (control unit) connector.
2. Loosen brake tube flare nuts, then remove brake tubes from ABS actuator and electric unit (control unit).
3. Remove brake booster hose from engine. Refer to BR-21, "Removal and Installation" .
4. Remove ABS actuator and electric unit (control unit) bracket mounting bolts.
5. Remove ABS actuator and electric unit (control unit) from vehicle.

INSTALLATION

Installation is the reverse order of removal.

CAUTION:

After installing harness connector in the ABS actuator and electric unit (control unit), make sure connector is securely locked.

SECTION CL
CLUTCH

CONTENTS

SERVICE INFORMATION 2

PRECAUTIONS 2
Precaution for Supplemental Restraint System (SRS) "AIR BAG" and "SEAT BELT PRE-TENSIONER" 2
Precaution for Procedure without Cowl Top Cover..... 2
Service Notice or Precaution 2

PREPARATION 3
Special Service Tool 3
Commercial Service Tool 3

NOISE, VIBRATION AND HARSHNESS (NVH) TROUBLESHOOTING 4
NVH Troubleshooting Chart 4

CLUTCH PEDAL 5
On-vehicle Inspection and Adjustment 5
Removal and Installation 6

CLUTCH FLUID 8
Air Bleeding Procedure 8

CLUTCH MASTER CYLINDER 9
Removal and Installation 9

CSC (CONCENTRIC SLAVE CYLINDER) 11
Removal and Installation 11

CLUTCH PIPING 12
Removal and Installation 12

CLUTCH DISC, CLUTCH COVER AND FLYWHEEL 13
Removal and Installation 13

SERVICE DATA AND SPECIFICATIONS (SDS) 16
Clutch Control System 16
Clutch Pedal 16
Clutch Disc 16
Clutch Cover 16

SERVICE INFORMATION

PRECAUTIONS

Precaution for Supplemental Restraint System (SRS) "AIR BAG" and "SEAT BELT PRE-TENSIONER"

INFOID:0000000001703112

The Supplemental Restraint System such as “AIR BAG” and “SEAT BELT PRE-TENSIONER”, used along with a front seat belt, helps to reduce the risk or severity of injury to the driver and front passenger for certain types of collision. This system includes seat belt switch inputs and dual stage front air bag modules. The SRS system uses the seat belt switches to determine the front air bag deployment, and may only deploy one front air bag, depending on the severity of a collision and whether the front occupants are belted or unbelted.
Information necessary to service the system safely is included in the SRS and SB section of this Service Manual.

WARNING:

- **To avoid rendering the SRS inoperative, which could increase the risk of personal injury or death in the event of a collision which would result in air bag inflation, all maintenance must be performed by an authorized NISSAN/INFINITI dealer.**
- **Improper maintenance, including incorrect removal and installation of the SRS, can lead to personal injury caused by unintentional activation of the system. For removal of Spiral Cable and Air Bag Module, see the SRS section.**
- **Do not use electrical test equipment on any circuit related to the SRS unless instructed to in this Service Manual. SRS wiring harnesses can be identified by yellow and/or orange harnesses or harness connectors.**

Precaution for Procedure without Cowl Top Cover

INFOID:0000000001843684

When performing the procedure after removing cowl top cover, cover the lower end of windshield with urethane, etc.

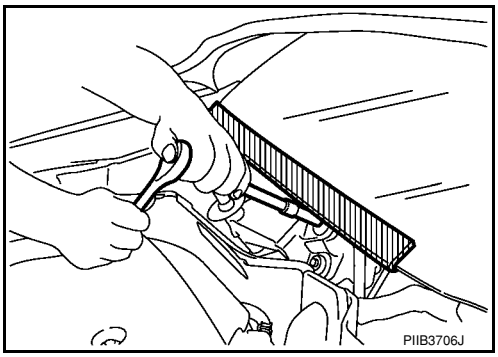

Service Notice or Precaution

INFOID:0000000001703113

- **Use recommended brake fluid when adding fluid to the clutch reservoir tank. Refer to MA-10.**
- **Never reuse fluid drained from clutch system.**
- **Be careful not to splash brake fluid on painted areas.**
- **Use new brake fluid to clean or wash all parts of master cylinder and operating cylinder.**
- **Never use mineral oils such as gasoline or kerosene. It will ruin the rubber parts of the hydraulic system.**
- **If transaxle assembly is removed from the vehicle, always replace CSC (Concentric slave cylinder). Return CSC to original position to remove transaxle assembly. Dust on clutch disc sliding parts may damage CSC seal and may cause clutch fluid leakage.**
- **Do not disassemble clutch master cylinder and CSC.**

WARNING:

After cleaning clutch disc, clean it with a dust collector. Do not use compressed air.

PREPARATION

Special Service Tool

INFOID:0000000001703114

The actual shapes of Kent-Moore tools may differ from those of special service tools illustrated here.

Tool number (Kent-Moore No.) Tool name	Description
ST20050240 (—) Diaphragm spring adjusting wrench 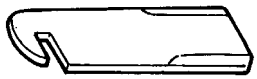 ZZA0508D	Adjusting unevenness of diaphragm spring of clutch cover
KV30101000 (—) Clutch aligning bar 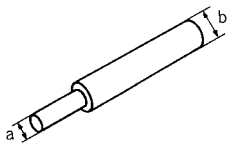 ZZA1178D	Installing clutch cover and clutch disc **a: 15.9 mm (0.626 in) dia.** **b: 19.8 mm (0.780 in) dia.**

Commercial Service Tool

INFOID:0000000001703115

Tool name	Description
Power tool 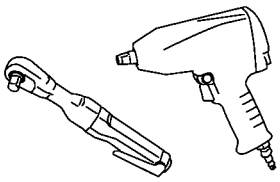 PBIC0190E	Loosening bolts and nuts

NOISE, VIBRATION AND HARSHNESS (NVH) TROUBLESHOOTING

NVH Troubleshooting Chart

INFOID:0000000001703116

Use the chart below to help you find the cause of the symptom. The numbers indicate the order of the inspection. If necessary, repair or replace these parts.

Reference page		CL-5	CL-8	EM-72	CL-11	CL-13											EM-93
SUSPECTED PARTS (Possible cause)		CLUTCH PEDAL (Inspection and adjustment)	CLUTCH LINE (Air in line)	ENGINE MOUNTING (Loose)	CSC (Concentric slave cylinder) (Worn, dirty or damaged)	CLUTCH DISC (Out of true)	CLUTCH DISC (Runout is excessive)	CLUTCH DISC (Lining broken)	CLUTCH DISC (Dirty or burned)	CLUTCH DISC (Oily)	CLUTCH DISC (Worn out)	CLUTCH DISC (Hardened)	CLUTCH DISC (Lack of spline grease)	DIAPHRAGM SPRING (Damaged)	DIAPHRAGM SPRING (Out of tip alignment)	PRESSURE PLATE (Distortion)	FLYWHEEL (Distortion)
Symptom	Clutch grabs/chatters			1			2			2	2	2			2		
	Clutch pedal spongy		1														
	Clutch noisy				1												
	Clutch slips	1								2	2			3		4	5
	Clutch does not disengage	1	2			5	5	5	5	5			5	6	6	7	

CLUTCH PEDAL

On-vehicle Inspection and Adjustment

INFOID:0000000001703117

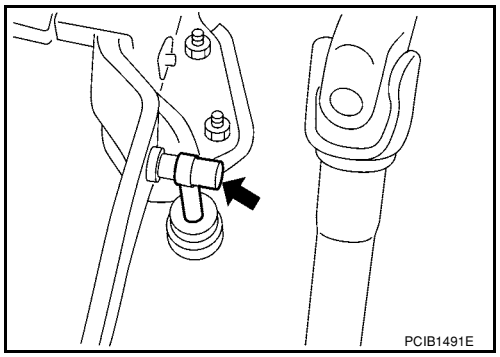

1. Check to see if the master cylinder rod end moves freely. It should not be bound by the clutch pedal.
   a. If the rod end does not move freely, check that the ASCD switch, if equipped, is not applying pressure to the clutch pedal causing the rod end to bind. To adjust, disconnect the ASCD switch electrical connector and turn the ASCD switch.
   b. Connect the ASCD switch electrical connector, if equipped.
   c. Verify that the master cylinder rod end moves freely. It should not be bound by the clutch pedal.
   d. If the rod end does not move freely, remove the rod end and check for deformation or damage on the rod end. Leave the rod end removed for step 2.
2. Check the clutch pedal stroke for free range of movement.
   a. With the master cylinder rod end removed, manually move the pedal up and down to determine if it moves freely.
   b. If any sticking is noted, replace the clutch pedal assembly. Re-verify that the master cylinder rod end moves freely.
3. Adjust clutch interlock switch (1) position so that clearance between clutch pedal (2) and thread end of clutch interlock switch (1), with clutch pedal fully depressed, is within specification (C).

Clearance C : 0.74 - 1.96 mm (0.0291 - 0.0772 in)

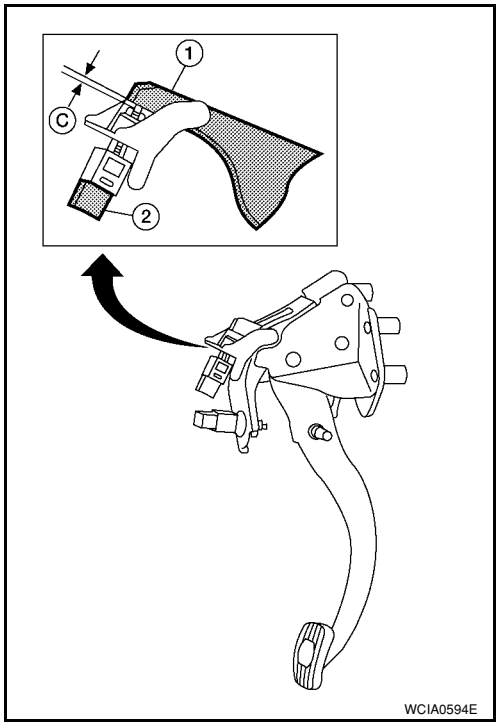

4. Adjust ASCD clutch switch (1), if equipped. Position so that clearance between clutch pedal (2) and thread end of ASCD clutch switch (1), with clutch pedal fully released, is within specification (A).

Clearance A : 0.74 - 1.96 mm (0.0291 - 0.0772 in)

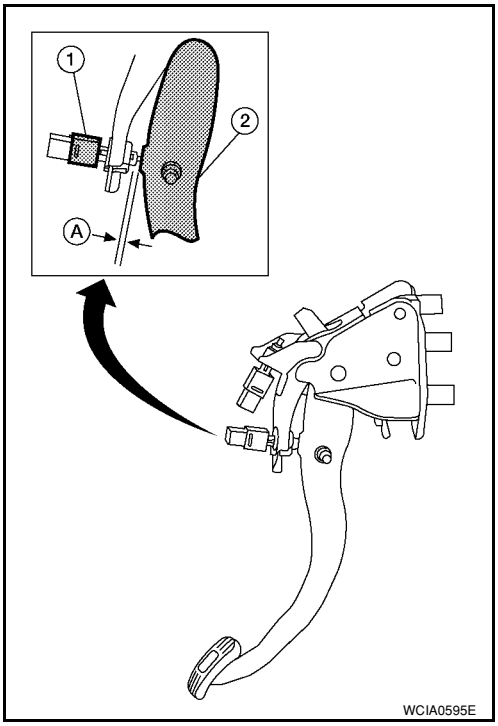

5. Check the clutch hydraulic system components (clutch master cylinder, clutch operating cylinder, clutch withdrawal lever and clutch release bearing) for sticking or binding.

a. If any sticking or binding is noted, repair or replace the related parts as necessary.

b. If any hydraulic system repair was necessary, bleed the clutch hydraulic system. Refer to CL-8, "Air Bleeding Procedure".
NOTE:
Do not use a vacuum assist or any other type of power bleeder on this system. Use of a vacuum assist or power bleeder will not purge all of the air from the system.

Removal and Installation

INFOID:0000000001703118

COMPONENTS

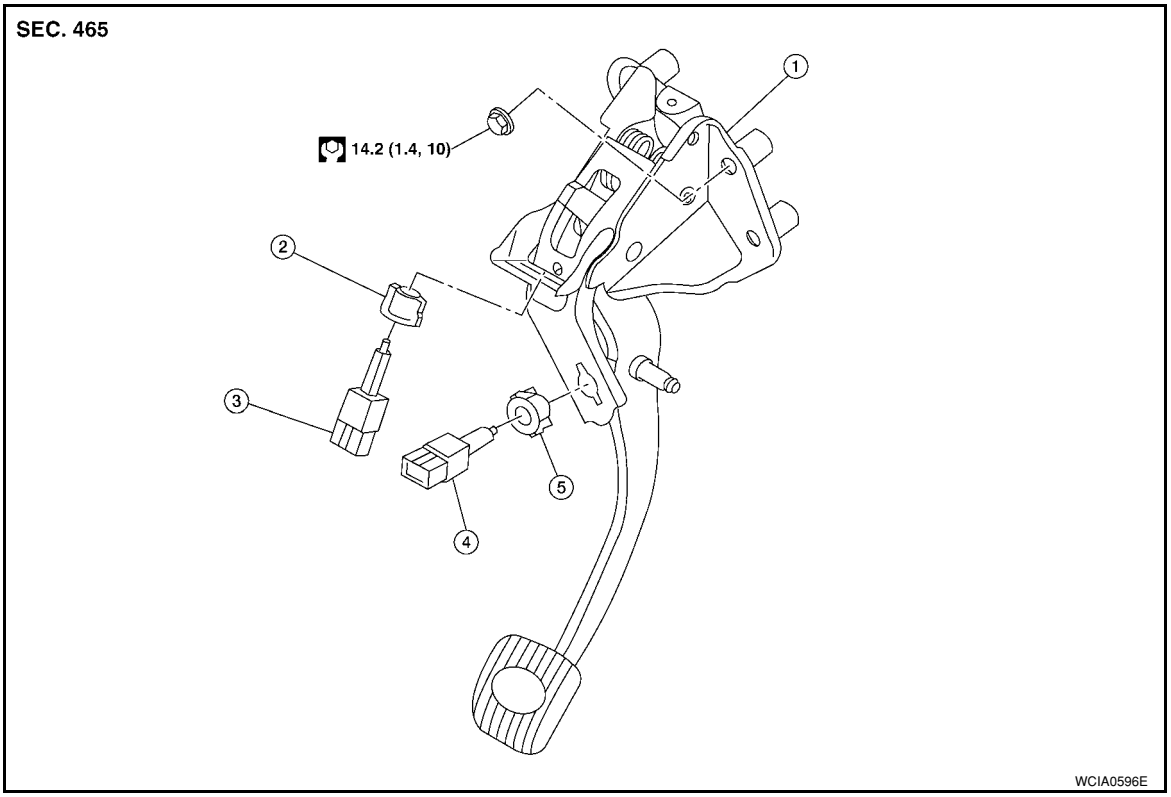

1. Clutch pedal assembly
2. Lock nut
3. Clutch interlock switch
4. ASCD clutch switch
5. Lock nut

REMOVAL

1. Remove instrument lower finisher. Refer to IP-11, "Removal and Installation".
2. Disconnect clutch interlock switch and ASCD clutch switch harness connectors, if equipped.
3. Remove clutch switch harness clamp from clutch pedal assembly.
4. Disconnect master cylinder rod end from clutch pedal lever.
5. Remove clutch pedal assembly nuts, and then remove clutch pedal assembly.

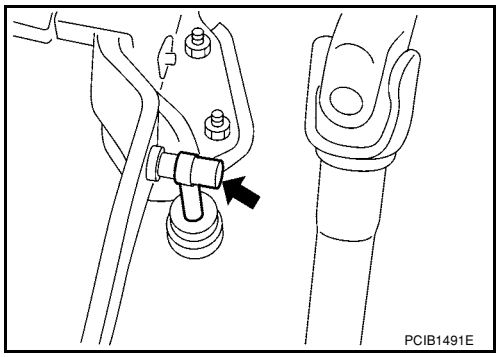

INSPECTION AFTER REMOVAL

Check clutch pedal for bend, damage or a cracked weld. If bend, damage or a cracked weld is found, replace clutch pedal assembly.

INSTALLATION

Installation is in the reverse order of removal.

- After installing the clutch switches, adjust the switch positions. Refer to CL-5, "On-vehicle Inspection and Adjustment".

CLUTCH FLUID

Air Bleeding Procedure

INFOID:0000000001703119

CAUTION:
Do not spill clutch fluid onto painted surfaces. If it spills, wipe up immediately and wash the affected area with water.
NOTE:
- Do not use a vacuum assist or any other type of power bleeder on this system. Use of a vacuum assist or power bleeder will not purge all the air from the system.
- Carefully monitor fluid level in reservoir tank during bleeding operation.

1. Fill master cylinder reservoir tank with new clutch fluid.
2. Connect a transparent vinyl tube and container to the bleeding connector (1) on the CSC.
3. Depress and release the clutch pedal slowly and fully 15 times at an interval of two to three seconds and release the clutch pedal.

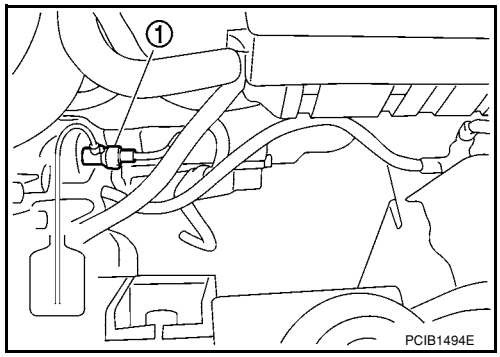

4. Bleed the air from the clutch system according to the following:
   1. Push in the lock pin (1) of the bleeding connector (2), and hold it in.
      CAUTION:
      Hold the lock pin in to prevent the bleeding connector from separating when fluid pressure is applied.

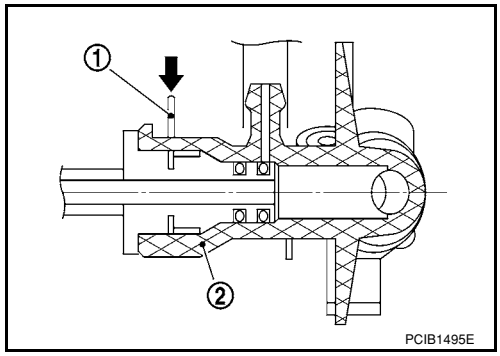

   2. Slide the clutch tube (1) away from the bleeding connector to the specified distance (A) to allow air to bleed from the clutch system.

      Dimension (A) : 5 mm (0.20 in)

   3. Depress the clutch pedal and hold it down.
      CAUTION:
      Hold the clutch pedal down to prevent air from getting back into the clutch system.
   4. Return the clutch tube (1) and lock pin (2) to their original positions.

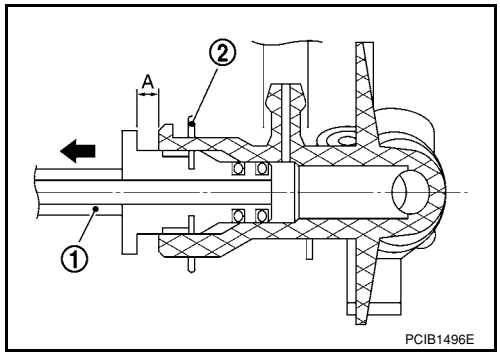

5. Release the clutch pedal and wait for 5 seconds.
6. Repeat steps 3 to 6 until no bubbles are observed in the clutch fluid.

CLUTCH MASTER CYLINDER

Removal and Installation

INFOID:0000000001703120

REMOVAL

1. Remove the battery, battery tray and brackets. Refer to SC-4.
2. Remove the air cleaner and air duct. Refer to EM-16.
3. Use one of the following methods to remove hose from master cylinder.
   - Drain clutch fluid from reservoir tank and remove hose.
   - Remove hose from master cylinder. Immediately plug hose and reservoir tank to prevent clutch fluid from dripping.

   CAUTION:
   Do not spill clutch fluid onto painted surfaces. If it spills, wipe up immediately and wash the affected area with water.
4. Remove master cylinder rod end from clutch pedal assembly.

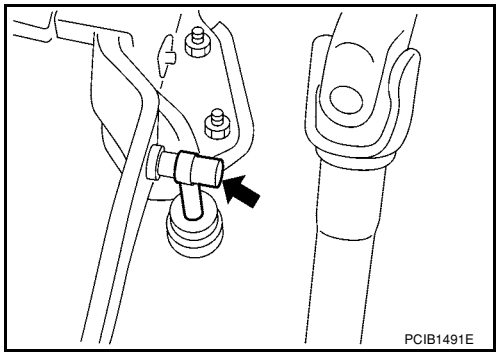

5. Remove lock pin (1) from connector of master cylinder (2) and separate clutch tube (3).

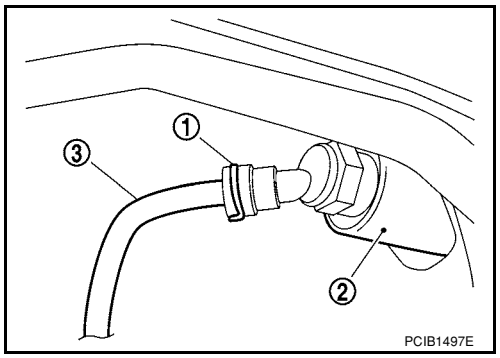

6. Rotate master cylinder clockwise by 45° and remove from the vehicle.

INSTALLATION

1. Tilt master cylinder clockwise by 45° and insert it in the mounting hole. Rotate counterclockwise to secure it. At this time, nipple is in the up position.
2. Install master cylinder rod end to clutch pedal.

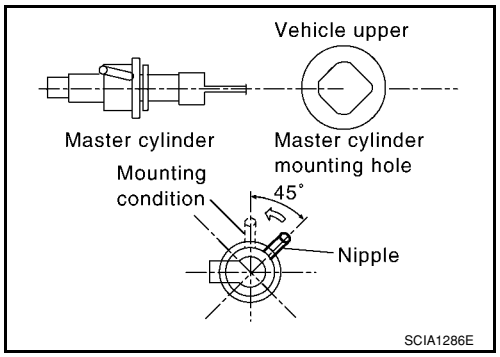

3. Install clutch tube (1) fully into connector of master cylinder (2).
4. Install lock pin (3) fully into connector of master cylinder (2).
5. Fill with new clutch fluid and bleed air from the system. Refer to CL-8.
6. After completing this procedure, inspect clutch pedal operation. Refer to CL-5, "On-vehicle Inspection and Adjustment".
7. Install the air cleaner and air duct. Refer to EM-16.
8. Install the battery. Refer to SC-4.

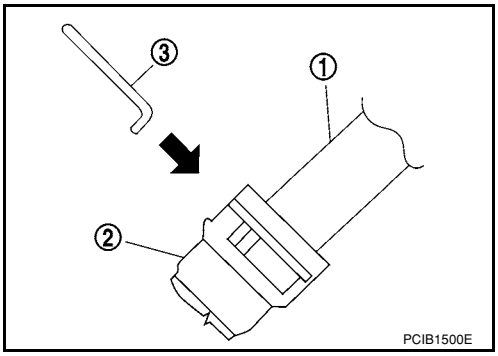

CSC (CONCENTRIC SLAVE CYLINDER)

Removal and Installation

INFOID:0000000001703121

CAUTION:
- **If transaxle assembly is removed from the vehicle, always replace CSC (Concentric slave cylinder). Return CSC insert to original position to remove transaxle assembly. Dust on clutch disc sliding parts may damage CSC seal and may cause clutch fluid leakage.**
- **Keep painted surface of the body and other parts free of clutch fluid. If it spills, wipe up immediately and wash the affected area with water.**

REMOVAL

1. Remove transaxle assembly. Refer to MT-16, "Removal and Installation".
2. Remove CSC bolts and the CSC from clutch housing.

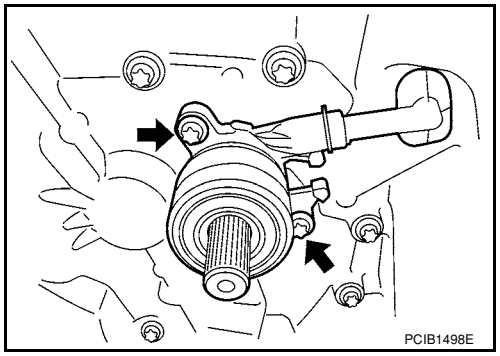

INSTALLATION

1. Install CSC to clutch housing and then tighten bolts to specification. Refer to MT-17, "Disassembly and Assembly".
   CAUTION:
   - **Do not reuse CSC.**
   - **Do not insert and operate CSC because piston and stopper of CSC components may fall off.**
2. Install transaxle assembly. Refer to MT-16, "Removal and Installation".
3. Bleed the air from the clutch hydraulic system. Refer to CL-8, "Air Bleeding Procedure".

CLUTCH PIPING

Removal and Installation

INFOID:0000000001703122

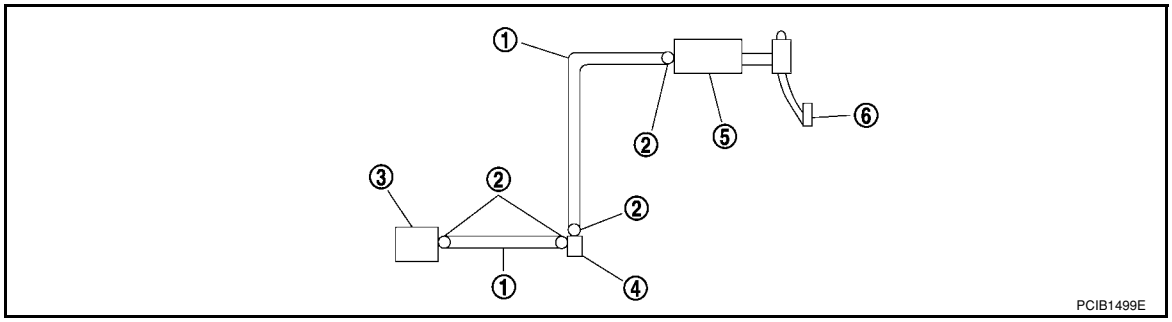

1.	Clutch tube	2.	Clutch tube lock pin	3.	CSC
4.	Clutch damper	5.	Clutch master cylinder	6.	Clutch pedal

Carefully observe the following steps during clutch tube removal and installation.

CAUTION:

Do not spill clutch fluid onto painted surfaces. If it spills, wipe up immediately and wash the affected area with water.

REMOVAL

1. Remove the battery, battery tray and brackets. Refer to SC-4.
2. Remove the air cleaner and air duct. Refer to EM-16.
3. Use one of the following methods to remove hose from clutch master cylinder.
   - Drain clutch fluid from reservoir tank and remove hose.
   - Remove hose from clutch master cylinder. Immediately plug hose and reservoir tank to prevent clutch fluid from dripping.

   CAUTION:

   Do not spill clutch fluid onto painted surfaces. If it spills, wipe up immediately and wash the affected area with water.
4. Remove clutch tube lock pin from clutch master cylinder.
5. Remove clutch tube lock pin at clutch housing.
6. Remove clutch tube lock pins (2) from clutch damper (3).
7. Remove clutch tube (1) from clutch damper (3).
8. Remove clutch damper (3) from bracket (4).

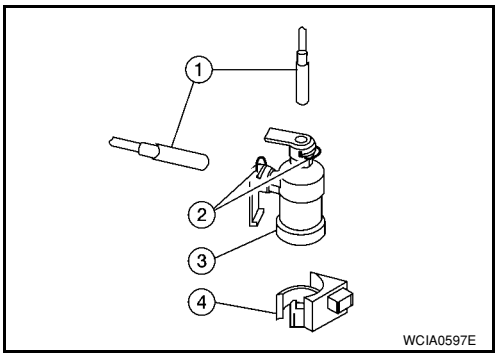

INSTALLATION

Installation is in the reverse order of removal.

- **Make sure that all tubes are fully installed into connectors**.
- **Make sure that all connector lock pins are fully installed.**
- After installation, bleed the air from the clutch hydraulic system. Refer to CL-8, "Air Bleeding Procedure".

CLUTCH DISC, CLUTCH COVER AND FLYWHEEL

Removal and Installation

INFOID:0000000001703123

COMPONENTS

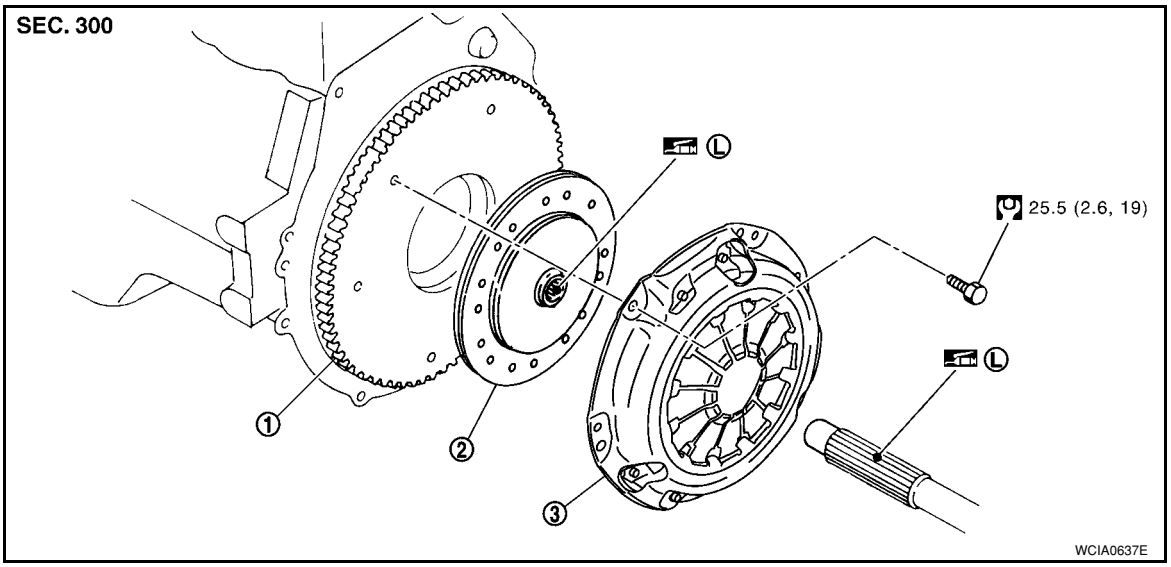

1. Flywheel
2. Clutch disc *1, *2
3. Clutch cover

Ⓛ Apply lithium-based grease including molybdenum disulphide.

*1. Do not clean in solvent.
*2. When installing, be careful that grease applied to input shaft does not adhere to clutch disc.

CAUTION:

- **If transaxle assembly is removed from the vehicle, always replace CSC (Concentric slave cylinder). Return CSC insert to original position to remove transaxle assembly. Dust on clutch disc sliding parts may damage CSC seal and may cause clutch fluid leakage.**
- **Be careful not to apply any grease to the clutch disc facing, pressure plate surface and flywheel surface.**

REMOVAL

1. Remove transaxle assembly from the vehicle. Refer to MT-16, "Removal and Installation".
2. Loosen clutch cover bolts evenly. Then remove clutch cover and clutch disc.

INSPECTION AND ADJUSTMENT AFTER REMOVAL

Clutch Disc

- Measure clutch disc runout and spline backlash. If either measurement exceeds the specification, replace clutch disc.

Runout and backlash : Refer to CL-16, "Clutch Disc".

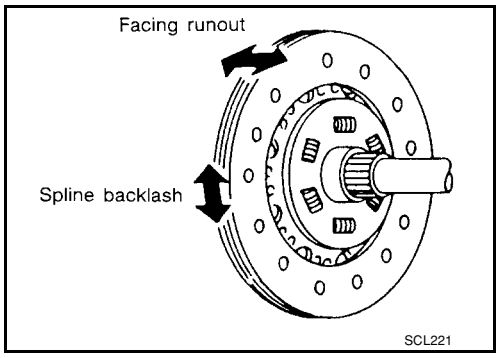

- Check clutch disc for burns, discoloration or oil or grease leakage. Replace if necessary.

- Determine the wear limit of clutch facing (depth to the rivet head). If measurement exceeds specifications, replace clutch disc.

Clutch facing wear : Refer to CL-16, "Clutch Disc".

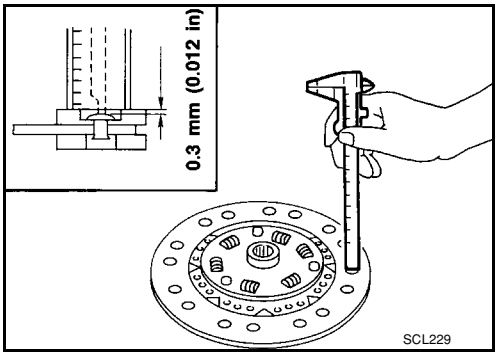

Clutch Cover

- Check clutch cover installed on vehicle for unevenness of diaphragm spring toe height. If unevenness exceeds specifications, adjust the height using Tool (A).

Uneven limit of diaphragm spring toe height : Refer to CL-16, "Clutch Cover".

Tool number A : ST20050240 (—)

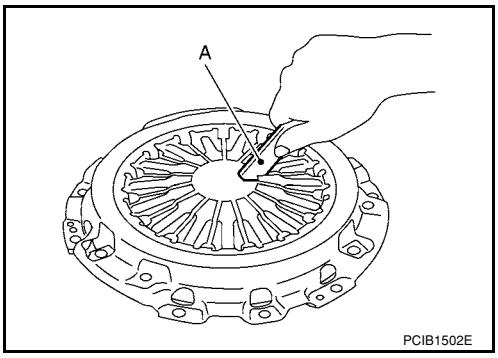

- Check clutch cover thrust ring for wear or breakage. If wear or breakage is found, replace clutch cover assembly.
  NOTE:
  - Worn thrust ring will generate a beating noise when tapped at the rivet using suitable tool.
  - Broken thrust ring will make a clinking sound when cover is shaken up and down.
- If a trace of burn or discoloration is found on clutch cover pressure plate to clutch disc contact surface, repair the surface with sandpaper. If surface is damaged or distorted, replace the assembly.

Flywheel Runout

- Check contact surface of flywheel for slight burns or discoloration. Repair flywheel with emery paper.
- Check the flywheel runout. Refer to EM-93, "Inspection After Disassembly".

CAUTION:
Measure flywheel outer face (not on knock pin and clutch cover mounting hole).

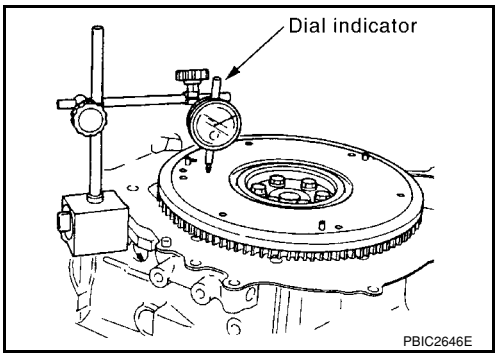

INSTALLATION

1. Clean clutch disc and input shaft splines to remove grease and dust caused by abrasion.
2. Apply recommended grease to clutch disc and input shaft splines.
   CAUTION:
   Be sure to apply grease to the points specified. Otherwise, noise, poor disengagement, or damage to the clutch may result. Excessive grease may cause slip or shudder. If it adheres to CSC seal, it will cause clutch fluid leakage. Wipe off excess grease.
3. Install clutch disc using tool.

   Tool number : KV30101000 (—)
4. Install clutch cover. Pre-tighten clutch cover bolts.

5. Tighten clutch cover bolts evenly in two steps in the order shown.
6. Install transaxle assembly. Refer to MT-16, "Removal and Installation".

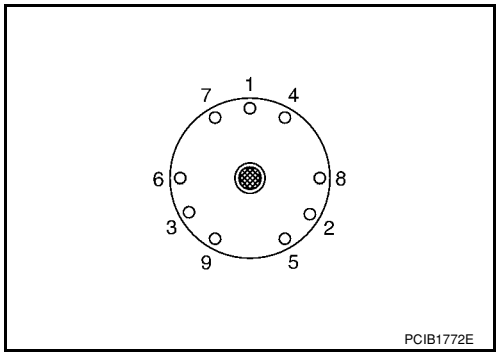

SERVICE DATA AND SPECIFICATIONS (SDS)

Clutch Control System

INFOID:0000000001703124

Type of clutch control	Hydraulic

Clutch Pedal

INFOID:0000000001703125

Clearance ″A″ between clutch pedal and ASCD switch threaded end while clutch pedal is fully released (if equipped).	0.74 - 1.96 mm (0.0291 - 0.0772 in)
Clearance ″C″ between clutch pedal and clutch interlock switch threaded end while clutch pedal is fully depressed.	0.74 - 1.96 mm (0.0291 - 0.0772 in)

Clutch Disc

INFOID:0000000001703126

Model	225
Facing size (outer dia. × inner dia. × thickness)	225 mm × 160 mm × 3.2 mm (8.86 in × 6.30 in × 0.126 in)
Thickness of disc assembly with load	7.2 - 7.6 mm (0.283 - 0.299 in) with 5,394 N (550 kg, 1,213 lb)
Runout limit/diameter of the area to be measured	1.0 mm (0.039 in) / 215 mm (8.46 in) dia.
Maximum spline backlash (at outer edge of disc)	1.0 mm (0.039 in)
Wear limit of facing (depth to the rivet head)	0.3 mm (0.012 in)

Clutch Cover

INFOID:0000000001703127

Set-load	5,394 N (550 kg, 1,213 lb)
Diaphragm spring lever height	20 - 22 mm (0.79 - 0.87 in)
Uneven limit of diaphragm spring toe height	0.7 mm (0.028 in) or less

SECTION CO
ENGINE COOLING SYSTEM

CONTENTS

SERVICE INFORMATION 2

PRECAUTIONS 2
Precaution for Supplemental Restraint System (SRS) "AIR BAG" and "SEAT BELT PRE-TENSIONER" 2
Precaution Necessary for Steering Wheel Rotation After Battery Disconnect 2
Precaution for Liquid Gasket 2

PREPARATION 4
Special Service Tool 4
Commercial Service Tool 4

OVERHEATING CAUSE ANALYSIS 5
Troubleshooting Chart 5

COOLING SYSTEM 7
Cooling Circuit 7

ENGINE COOLANT 8
Inspection 8
Changing Engine Coolant 8

RADIATOR 11
Component 11
Removal and Installation 11
Checking Radiator Cap 13
Checking Radiator 13

COOLING FAN 14
Component (Models with A/C) 14
Component (Models without A/C) 14
Removal and Installation 15
DISASSEMBLY AND ASSEMBLY 15

WATER PUMP 16
Component 16
Removal and Installation 16

THERMOSTAT 17
Component 17
Removal and Installation 17

WATER OUTLET AND WATER CONTROL VALVE 19
Component 19
Removal and Installation 19

SERVICE DATA AND SPECIFICATIONS (SDS) 22
Standard and Limit 22

SERVICE INFORMATION

PRECAUTIONS

Precaution for Supplemental Restraint System (SRS) "AIR BAG" and "SEAT BELT PRE-TENSIONER"

INFOID:0000000001702522

The Supplemental Restraint System such as “AIR BAG” and “SEAT BELT PRE-TENSIONER”, used along with a front seat belt, helps to reduce the risk or severity of injury to the driver and front passenger for certain types of collision. This system includes seat belt switch inputs and dual stage front air bag modules. The SRS system uses the seat belt switches to determine the front air bag deployment, and may only deploy one front air bag, depending on the severity of a collision and whether the front occupants are belted or unbelted.
Information necessary to service the system safely is included in the SRS and SB section of this Service Manual.

WARNING:

- **To avoid rendering the SRS inoperative, which could increase the risk of personal injury or death in the event of a collision which would result in air bag inflation, all maintenance must be performed by an authorized NISSAN/INFINITI dealer.**
- **Improper maintenance, including incorrect removal and installation of the SRS, can lead to personal injury caused by unintentional activation of the system. For removal of Spiral Cable and Air Bag Module, see the SRS section.**
- **Do not use electrical test equipment on any circuit related to the SRS unless instructed to in this Service Manual. SRS wiring harnesses can be identified by yellow and/or orange harnesses or harness connectors.**

Precaution Necessary for Steering Wheel Rotation After Battery Disconnect

INFOID:0000000001702523

NOTE:

- This Procedure is applied only to models with Intelligent Key system and NATS (NISSAN ANTI-THEFT SYSTEM).
- Remove and install all control units after disconnecting both battery cables with the ignition knob in the ″LOCK″ position.
- Always use CONSULT-III to perform self-diagnosis as a part of each function inspection after finishing work. If DTC is detected, perform trouble diagnosis according to self-diagnostic results.

For models equipped with the Intelligent Key system and NATS, an electrically controlled steering lock mechanism is adopted on the key cylinder.
For this reason, if the battery is disconnected or if the battery is discharged, the steering wheel will lock and steering wheel rotation will become impossible.
If steering wheel rotation is required when battery power is interrupted, follow the procedure below before starting the repair operation.

OPERATION PROCEDURE

1. Connect both battery cables.
   NOTE:
   Supply power using jumper cables if battery is discharged.
2. Use the Intelligent Key or mechanical key to turn the ignition switch to the ″ACC″ position. At this time, the steering lock will be released.
3. Disconnect both battery cables. The steering lock will remain released and the steering wheel can be rotated.
4. Perform the necessary repair operation.
5. When the repair work is completed, return the ignition switch to the ″LOCK″ position before connecting the battery cables. (At this time, the steering lock mechanism will engage.)
6. Perform a self-diagnosis check of all control units using CONSULT-III.

Precaution for Liquid Gasket

INFOID:0000000001702524

REMOVAL OF LIQUID GASKET SEALING

- After removing nuts and bolts, separate the mating surface, using Tool and remove old liquid gasket sealing.

Tool number : KV10111100 (J-37228)

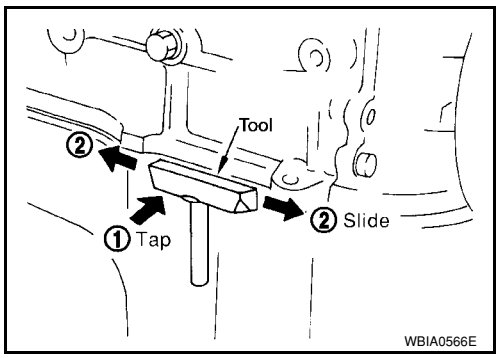

CAUTION:
Be careful not to damage the mating surfaces.

- Tap Tool to insert it (1), and then slide it by tapping on the side (2) as shown.
- In areas where Tool is difficult to use, use plastic hammer to lightly tap the parts, to remove it.

CAUTION:
If for some unavoidable reason suitable tool such as screwdriver is used, be careful not to damage the mating surfaces.

LIQUID GASKET APPLICATION PROCEDURE

1. Remove old liquid gasket adhering to the liquid gasket application surface and the mating surface, using scraper.
   - Remove liquid gasket completely from the groove of the liquid gasket application surface, bolts, and bolt holes.
2. Thoroughly clean the mating surfaces and remove adhering moisture, grease and foreign materials.
3. Attach liquid gasket tube to Tool.

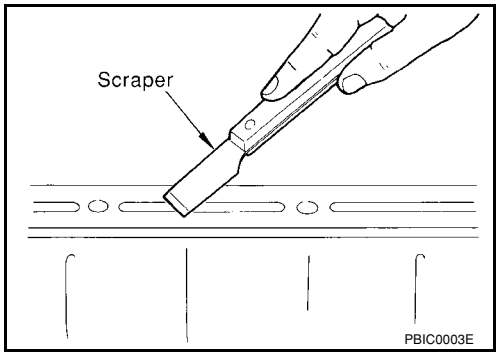

Tool number : WS39930000 (—)

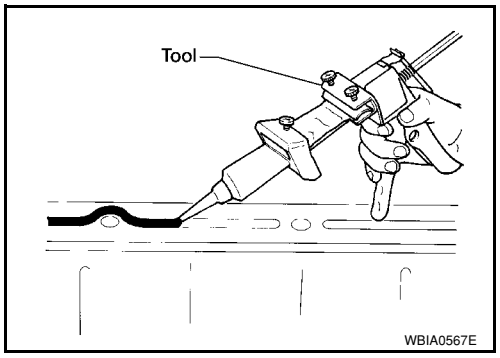

Use Genuine RTV Silicone Sealant or equivalent. Refer to GI-42, "Recommended Chemical Product and Sealant".

4. Apply liquid gasket without breaks to the specified location with the specified dimensions.
   - If there is a groove for the liquid gasket application, apply liquid gasket to the groove.

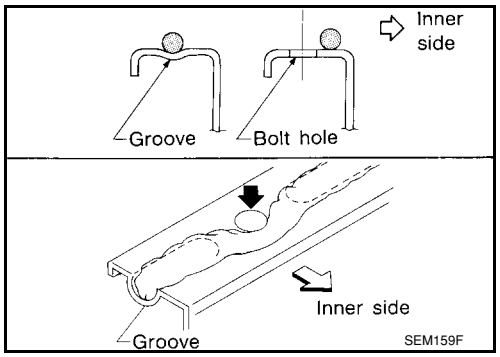

- As for the bolt holes, normally apply liquid gasket inside the holes. Occasionally, it should be applied outside the holes. Make sure to read the text of service manual.
- Within five minutes of liquid gasket application, install the mating component.
- If liquid gasket protrudes, wipe it off immediately.
- Do not retighten nuts or bolts after the installation.
- After 30 minutes or more have passed from the installation, fill engine oil and engine coolant.

CAUTION:
If there are specific instructions in this manual, observe them.

PREPARATION

Special Service Tool

INFOID:0000000001702525

The actual shapes of Kent-Moore tools may from those of special service tools illustrated here.

Tool number (Kent-Moore No.) Tool name	Description
WS39930000 (—) Tube pressure 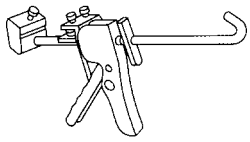 S-NT052	Pressing the tube of liquid gasket
EG17650301 (J-33984-A) Radiator cap tester adapter 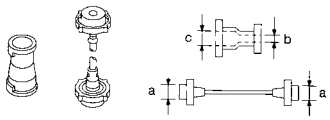 S-NT564	Adapting radiator cap tester to radiator cap and radiator filler neck **a: 28 (1.10) dia.** **b: 31.4 (1.236) dia.** **c: 41.3 (1.626) dia.** Unit: mm (in)
KV10111100 (J-37228) Seal cutter 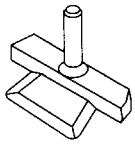 NT046	Removing chain tensioner cover and water pump cover
— (J-23688) Engine coolant refractometer 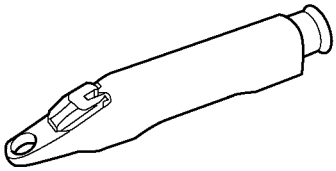 WBIA0539E	Checking concentration of ethylene glycol in engine coolant

Commercial Service Tool

INFOID:0000000001702526

Tool name	Description
Radiator cap tester 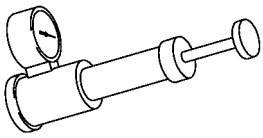 PBIC1982E	Checking radiator and radiator cap

OVERHEATING CAUSE ANALYSIS

Troubleshooting Chart

INFOID:0000000001702527

	Symptom		Check items	
Cooling system parts malfunction	Poor heat transfer	Water pump malfunction	Worn or loose drive belt	—
		Thermostat stuck closed	Thermostat	
		Damaged fins	Dust contamination or paper clogging	
			Physical damage	
		Clogged radiator cooling tube	Excess foreign material (rust, dirt, sand, etc.)	
	Reduced air flow	Cooling fan does not operate	Fan assembly	—
		High resistance to fan rotation		
		Damaged fan blades		
	Damaged radiator shroud	—		—
	Improper engine coolant mixture ratio	—	— Engine coolant viscosity	—
	Poor engine coolant quality	—		—
	Insufficient engine coolant	Engine coolant leaks	Cooling hose	Loose clamp
				Cracked hose
			Water pump	Poor sealing
			Radiator cap	Loose
				Poor sealing
			Radiator	O-ring for damage, deterioration or improper fitting
				Cracked radiator tank
				Cracked radiator core
			Reservoir tank	Cracked reservoir tank
		Overflowing reservoir tank	Exhaust gas leaks into cooling system	Cylinder head deterioration
				Cylinder head gasket deterioration

	Symptom		Check items	
Except cooling system parts malfunction	—	Overload on engine	Abusive driving	High engine rpm under no load
				Driving in low gear for extended time
				Driving at extremely high speed
			Power train system malfunction	—
			Installed improper size wheels and tires	
			Dragging brakes	
			Improper ignition timing	
	Blocked or restricted air flow	Blocked bumper	— Installed front bumper fascia cover	—
		Blocked radiator grille		
			Mud contamination or paper clogging	
		Blocked radiator	— Blocked air flow	
		Blocked condenser		
		Installed large fog lamp		

COOLING SYSTEM

Cooling Circuit

INFOID:0000000001702528

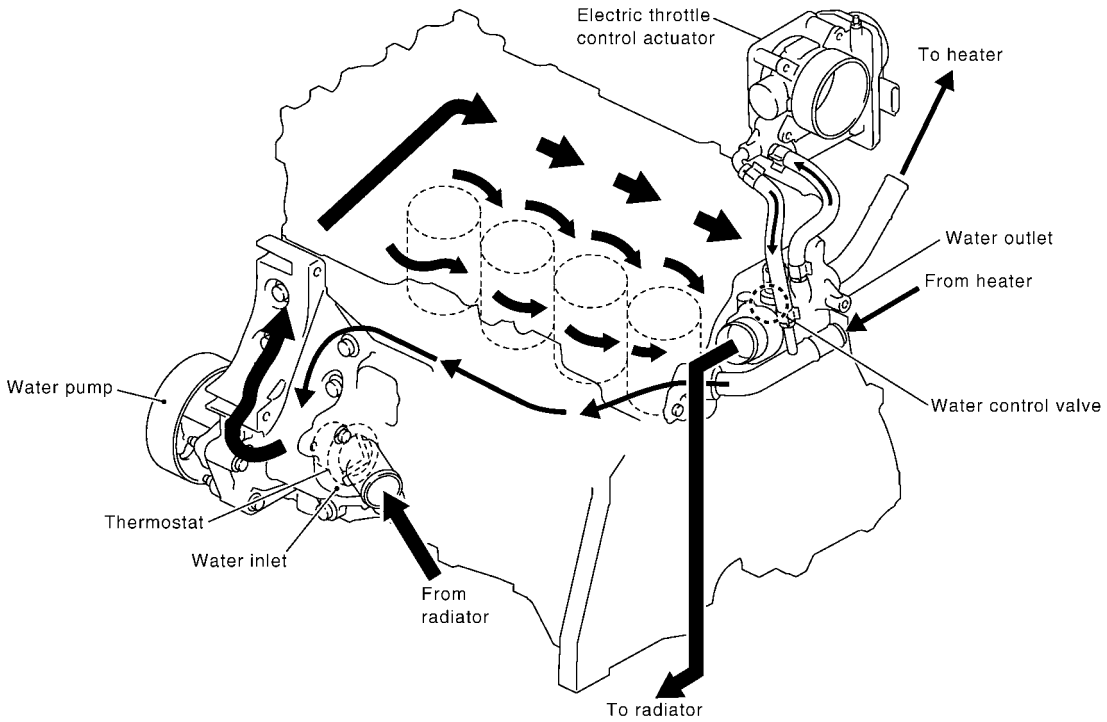

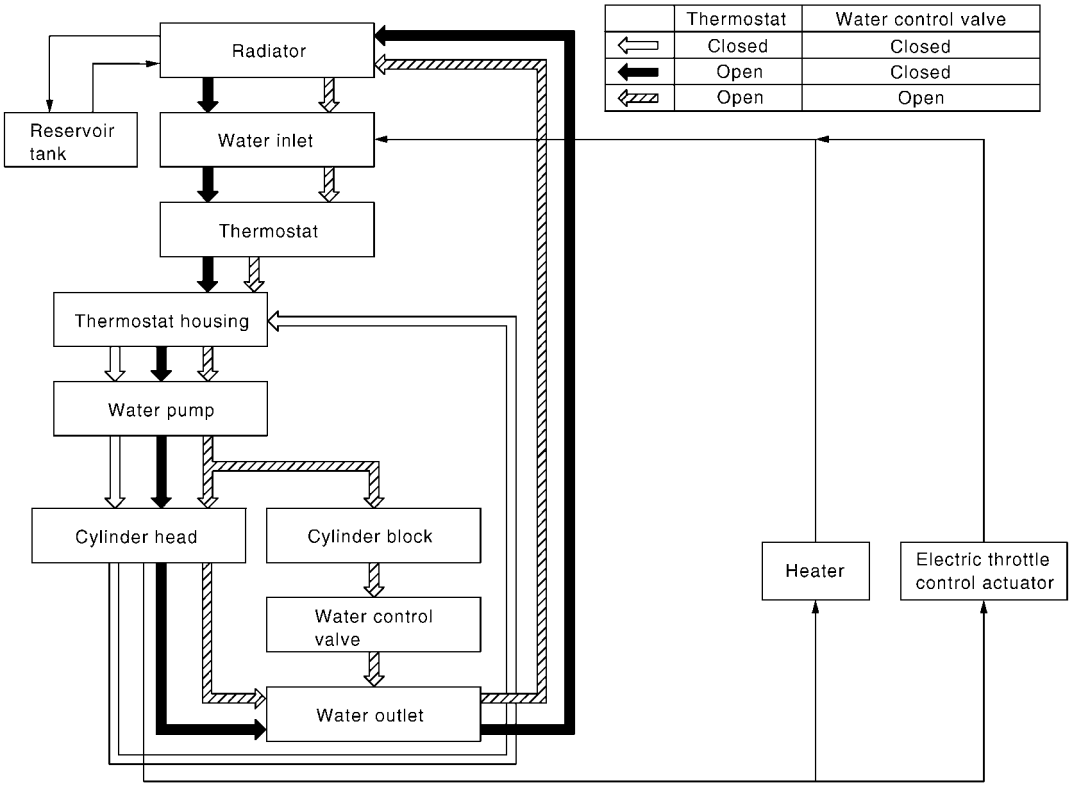

	Thermostat	Water control valve
⇦	Closed	Closed
⬅	Open	Closed
⇦	Open	Open

PBIC4719E

ENGINE COOLANT

Inspection

INFOID:0000000001702529

LEVEL CHECK

- Check if the reservoir tank engine coolant level is within the “MIN” to “MAX” range when engine is cool.
- Adjust the engine coolant level as necessary.

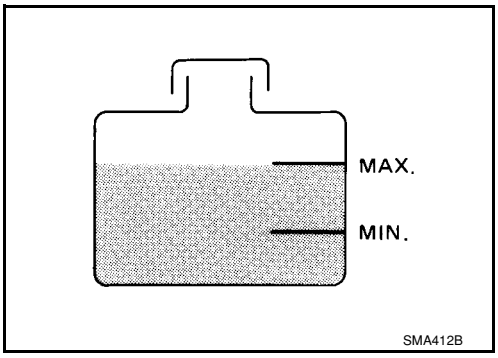

CHECKING COOLING SYSTEM FOR LEAKS

To check for leaks, apply pressure to the cooling system using Tool.

Tool number : EG17650301 (J-33984-A)

Testing pressure : 157 kPa (1.6 kg/cm^2, 23 psi)

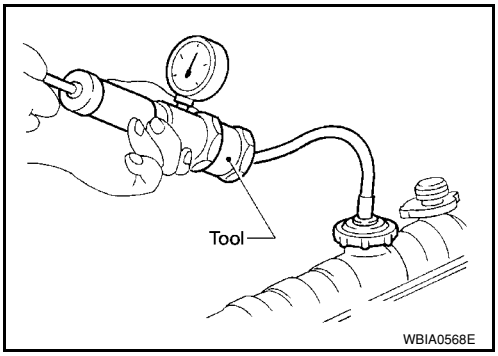

WARNING:
Never remove the radiator cap when the engine is hot. Serious burns could occur from high pressure coolant escaping from the radiator.
CAUTION:
Higher pressure than specified may cause radiator damage.

Changing Engine Coolant

INFOID:0000000001702530

WARNING:
- **To avoid being scalded, do not change engine coolant when engine is hot.**
- **Wrap a thick cloth around radiator cap and carefully remove the cap. First, turn the cap a quarter of a turn to release built-up pressure. Then turn the cap all the way.**
- **Be careful not to allow engine coolant to contact drive belt.**

DRAINING ENGINE COOLANT

1. Open radiator drain plug (1) at the bottom of radiator, and then remove radiator cap.
   - ⇦ Front
   When drain all of engine coolant in the system, open water drain plug on cylinder block. Refer to EM-76.
   CAUTION:
   - **Perform this step when engine is cold.**
   - **Do not spill engine coolant on drive belt.**

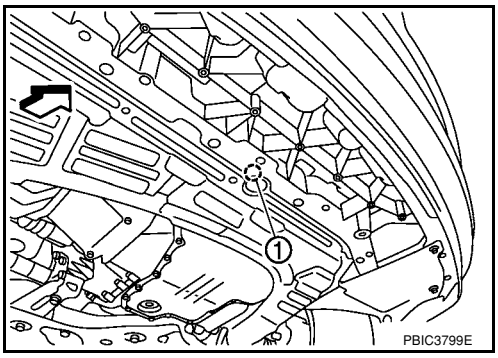

2. Remove reservoir tank as necessary, and drain engine coolant and clean reservoir tank before installing. Refer to CO-11.
3. Check drained engine coolant for contaminants such as rust, corrosion or discoloration.
   If contaminated, flush the engine cooling system. Follow the "FLUSHING COOLING SYSTEM" procedure.

REFILLING ENGINE COOLANT

1. Install reservoir tank if removed. Refer to CO-11.
2. Install radiator drain plug.
   - **If water drain plug on cylinder block is removed, close and tighten it. Refer to EM-76.**

   CAUTION:
   Be sure to clean radiator drain plug and install with new O-ring. Refer to CO-11, "Component".
3. Make sure that each hose clamp has been firmly tightened.
4. Remove air duct assembly. Refer to EM-16.
5. Disconnect heater hose (1) at position (⬅) as shown.
   - ⇦ Front
   - Reposition heater hose as high as possible.

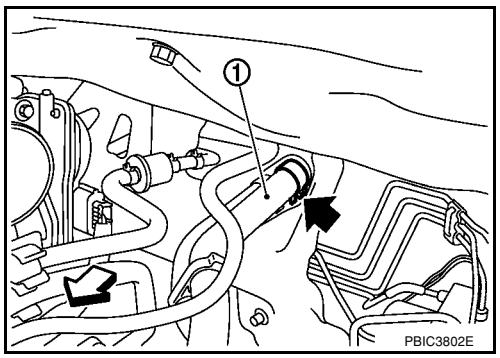

6. Fill radiator and reservoir tank to specified level.
   - **Pour engine coolant through engine coolant filler neck slowly of less than 2 ℓ (2 1/8 US qt, 1-3/4 Imp qt) a minute to allow air in system to escape.**
   - **Use NISSAN Genuine Engine Coolant or equivalent mixed with water (distilled or demineralized). Fill cooling system to specification. Refer to MA-10.**
   - When engine coolant overflows disconnected heater hose, connect heater hose, and continue filling the engine coolant, if heater hose is disconnected.

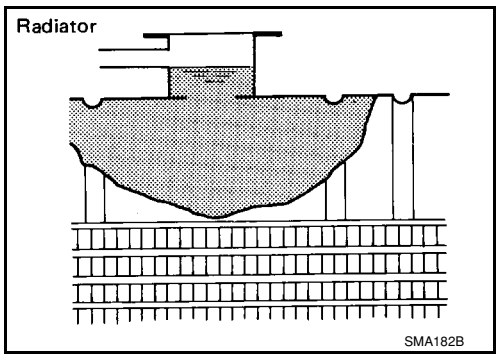

7. Install radiator cap.
8. Install air duct assembly. Refer to EM-16.
9. Warm up until opening thermostat. Standard for warming-up time is approximately 10 minutes at 3,000 rpm.
   - Make sure thermostat opening condition by touching radiator hose (lower) to see a flow of warm water.

   CAUTION:
   Watch water temperature gauge so as not to overheat the engine.
10. Stop engine and cool down to less than approximately 50°C (122°F).
    - Cool down using fan to reduce the time.
    - If necessary, refill radiator up to filler neck with engine coolant.
11. Refill reservoir tank to “MAX” level line with engine coolant.
12. Repeat steps 6 through 11 two or more times with radiator cap installed until engine coolant level no longer drops.
13. Check cooling system for leaks with engine running.
14. Warm up engine, and check for sound of engine coolant flow while running engine from idle up to 3,000 rpm with heater temperature controller set at several position between “COOL” and “WARM”.
    - Sound may be noticeable at heater unit.
15. Repeat step 14 three times.
16. If sound is heard, bleed air from cooling system by repeating steps 6 through 11 until engine coolant level no longer drops.

FLUSHING COOLING SYSTEM

1. Install reservoir tank if removed. Refer to CO-11.
2. Install radiator drain plug.
   - **If water drain plug on cylinder block is removed, close and tighten it. Refer to EM-76.**

   CAUTION:
   Be sure to clean radiator drain plug and install with new O-ring. Refer to CO-11, "Component".

3. Fill radiator and reservoir tank with water and reinstall radiator cap.
4. Run engine and warm it up to normal operating temperature.
5. Rev engine two or three times under no-load.
6. Stop engine and wait until it cools down.
7. Drain water from the cooling system. Refer to CO-8, "Changing Engine Coolant".
8. Repeat steps 1 through 7 until clear water begins to drain from radiator.

RADIATOR

Component

INFOID:0000000001702531

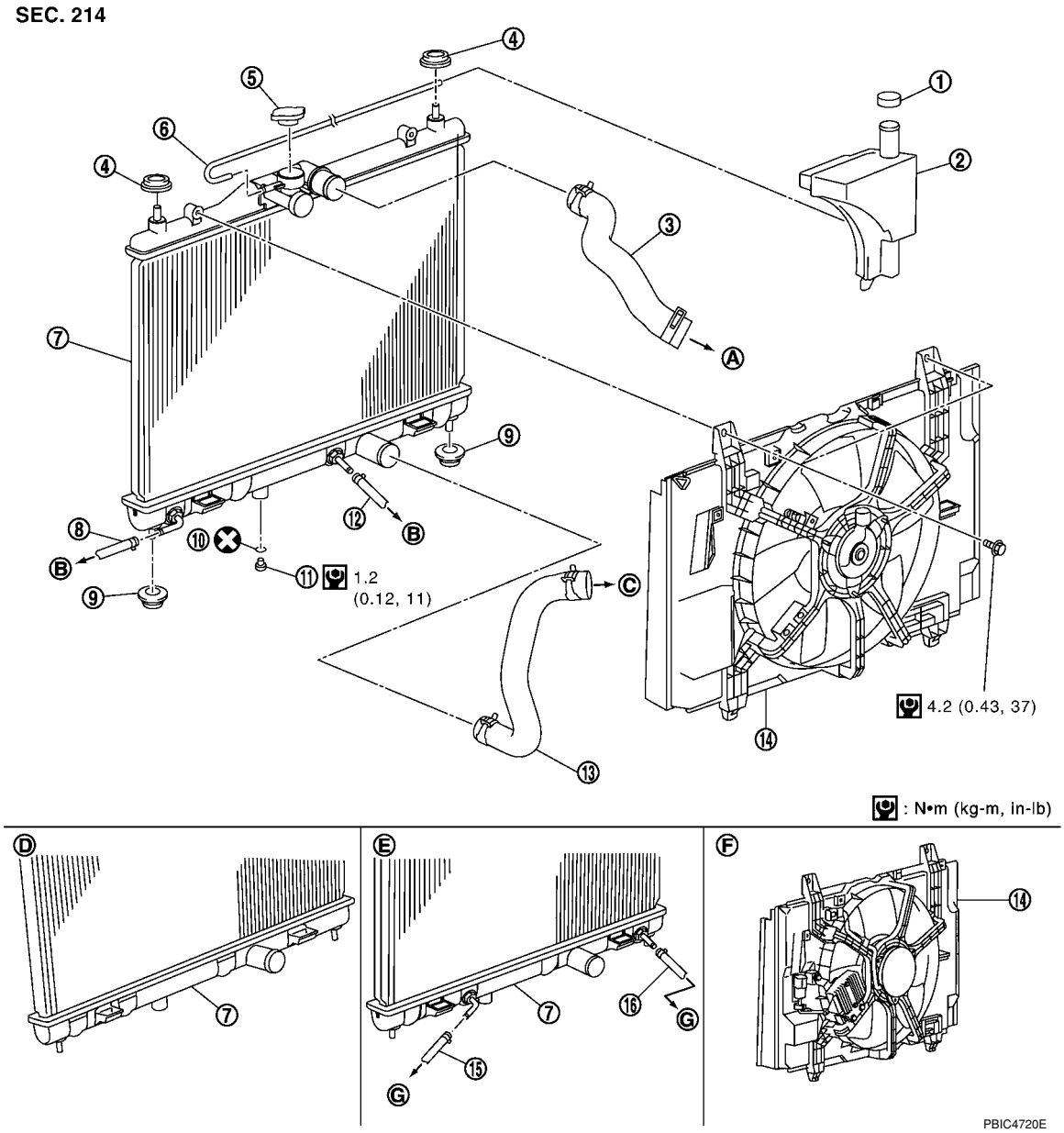

1.	Reservoir tank cap	2.	Reservoir tank	3.	Radiator hose (upper)
4.	Mounting rubber (upper)	5.	Radiator cap	6.	Reservoir tank hose
7.	Radiator	8.	A/T fluid cooler hose	9.	Mounting rubber (lower)
10.	O-ring	11.	Radiator drain plug	12.	A/T fluid cooler hose
13.	Radiator hose (lower)	14.	Cooling fan assembly	15.	CVT fluid cooler hose
16.	CVT fluid cooler hose	A.	To water outlet	B.	To A/T
C.	To water inlet	D.	M/T models	E.	CVT models
F.	Models with A/C	G.	To CVT		

Removal and Installation

INFOID:0000000001702532

WARNING:

Do not remove radiator cap when the engine is hot. Serious burns could occur from high-pressure engine coolant escaping from radiator. Wrap a thick cloth around the cap. Slowly turn it a quarter of a turn to release built-up pressure. Carefully remove radiator cap by turning it all the way.

REMOVAL

1. Drain engine coolant from radiator. Refer to CO-8, "Changing Engine Coolant".
   CAUTION:
   - **Perform this step when engine is cold.**
   - **Do not spill engine coolant on drive belt.**
2. Remove air duct (inlet). Refer to EM-16.
3. Remove reservoir tank as follows:

a. Disconnect reservoir tank hose.

b. Release the tab (A) in the direction shown by the arrow (⬅).

c. Lift up while removing the reservoir tank hose, and remove it.

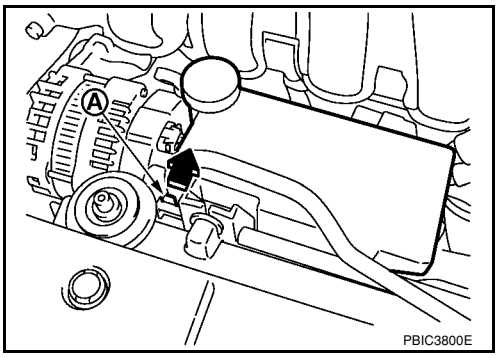

4. Disconnect harness connector from fan motors, and move harness to aside.
5. Disconnect CVT or A/T fluid cooler hoses if equipped.
   - Install plug to avoid leakage of CVT or A/T fluid if equipped.
6. Remove radiator hoses (upper and lower).
7. Remove radiator core support cover. Refer toBL-19.
8. Remove radiator core support (upper) bolts, bolts of stationary part on the radiator core support side and clip. Lift radiator from radiator (upper) mount part of radiator core support (upper) (2).
9. Move radiator assembly (1) to the rearward direction of vehicle, and then lift it upward to remove.
   CAUTION:
   Do not damage or scratch A/C condenser if equipped and radiator core when removing.

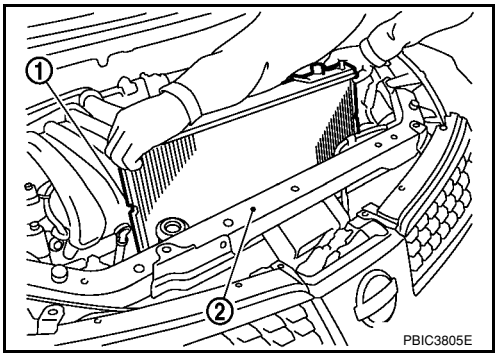

INSTALLATION

Installation is the reverse order of removal.

CAUTION:

Do not damage or scratch A/C condenser if equipped and radiator core when removing.

INSPECTION AFTER INSTALLATION

- Check for leaks of engine coolant. Refer to CO-8, "Inspection".
- Start and warm up engine. Visually check if there is no leaks of engine coolant and CVT or A/T fluid if equipped. Refer to CVT-13 or AT-15.

Checking Radiator Cap

INFOID:0000000001702533

- Check valve seat of radiator cap.
- Check if valve seat is swollen to the extent that the edge of the plunger cannot be seen when watching it vertically from the top.
- Check if valve seat has no soil and damage.

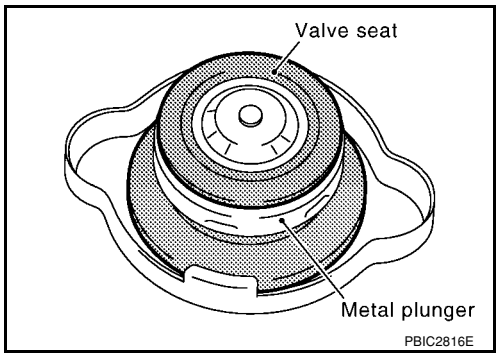

- Pull negative-pressure valve to open it, and make sure that it is completely closed when released.
- Make sure that there is no dirt or damage on the valve seat of radiator cap negative-pressure valve.
- Make sure that the valve operates properly in the opening and closing conditions.

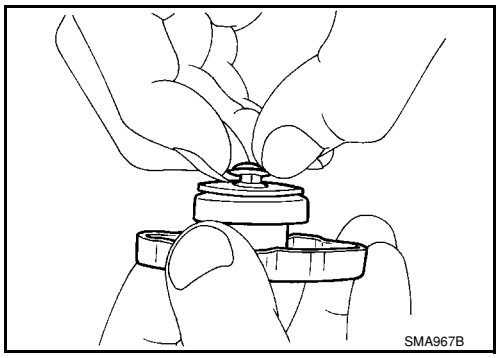

- Check radiator cap relief pressure using Tool.

Tool number : EG17650301 (J-33984-A)

Standard: 78 – 98 kPa (0.78 - 0.98 bar, 0.8 – 1.0 kg/cm^2, 11 – 14 psi)

Limit: 59 kPa (0.59 bar, 0.6 kg/cm^2, 9 psi)

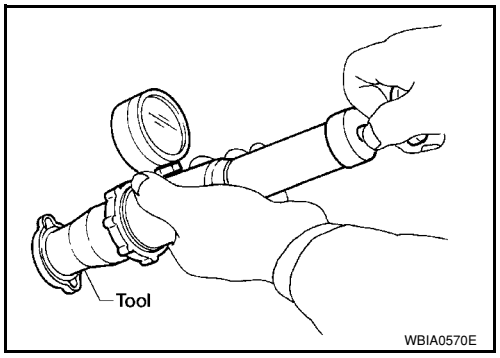

- When connecting the radiator cap to the tester, apply water or coolant to the cap seal surface.
- Replace the radiator cap if there is an abnormality in the negative-pressure valve, or if the open-valve pressure is outside of the standard values.

- Replace radiator cap if there it does not comply to specifications to the above three checks.

CAUTION:
When installing radiator cap, thoroughly wipe out the radiator filler neck to remove any waxy residue or foreign material.

Checking Radiator

INFOID:0000000001702534

Check radiator for mud or clogging. If necessary, clean radiator as follows.
- Be careful not to bend or damage radiator fins.
- When radiator is cleaned without removal, remove all surrounding parts such as cooling fan, radiator shroud and horns. Then tape harness and connectors to prevent water from entering.

1. Apply water by hose to the back side of the radiator core vertically downward.
2. Apply water again to all radiator core surface once per minute.
3. Stop washing if any stains no longer flow out from radiator.
4. Blow air into the back side of radiator core vertically downward.
   - Use compressed air lower than 490 kPa (4.9 bar, 5 kg/cm^2, 71 psi) and keep distance more than 30 cm (11.8 in).
5. Blow air again into all the radiator core surfaces once per minute until no water sprays out.

COOLING FAN

Component (Models with A/C)

INFOID:0000000001702535

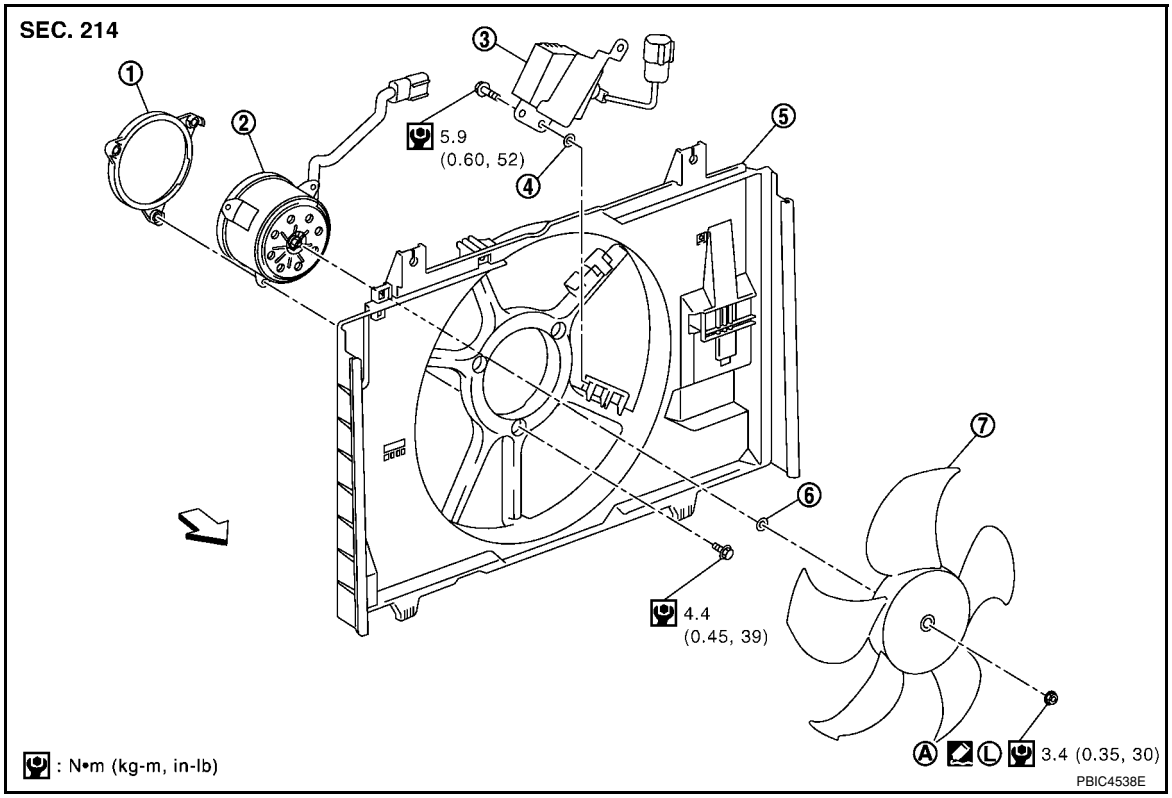

1.	Fan motor cover	2.	Fan motor	3.	Cooling fan control module
4.	Washer	5.	Fan shroud	6.	Washer
7.	Cooling fan	A.	Apply on fan motor shaft	⇦	Front

Component (Models without A/C)

INFOID:0000000001702536

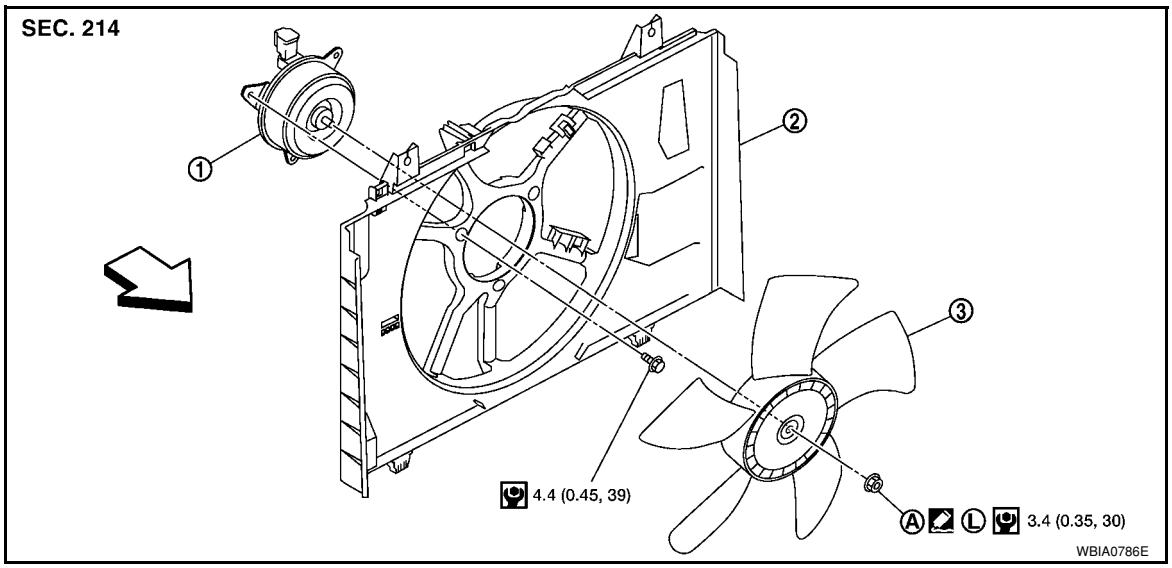

1.	Fan motor	2.	Fan shroud	3.	Cooling fan
A.	Apply on fan motor shaft	⇦	Front		

Removal and Installation

INFOID:0000000001702537

REMOVAL

1. Drain engine coolant from radiator. Refer to CO-8, "Changing Engine Coolant".
   CAUTION:
   - **Perform this step when engine is cold.**
   - **Do not spill engine coolant on drive belt.**
2. Remove air duct (inlet). Refer to EM-16, "Component".
3. Remove reservoir tank. Refer to CO-11, "Component".
4. Disconnect radiator hose (upper) at radiator side. Refer to CO-11, "Component".
5. Disconnect harness connectors from fan motor, and move harness to aside.
6. Remove cooling fan assembly.
   CAUTION:
   Be careful not to damage or scratch the radiator core.

INSTALLATION

Installation is the reverse order of removal.
- Cooling fans are controlled by ECM. For details, refer to EC-412.

CAUTION:
Be careful not to damage or scratch the radiator core.

DISASSEMBLY AND ASSEMBLY

INFOID:0000000001702538

Disassembly

1. Remove cooling fan from fan motor.
2. Remove fan motor from fan shroud.

Inspection After Disassembly

Inspect cooling fan for crack or unusual bend.
- If anything is found, replace cooling fan.

Assembly

Assembly is the reverse order of disassembly.

WATER PUMP

Component

INFOID:0000000001702539

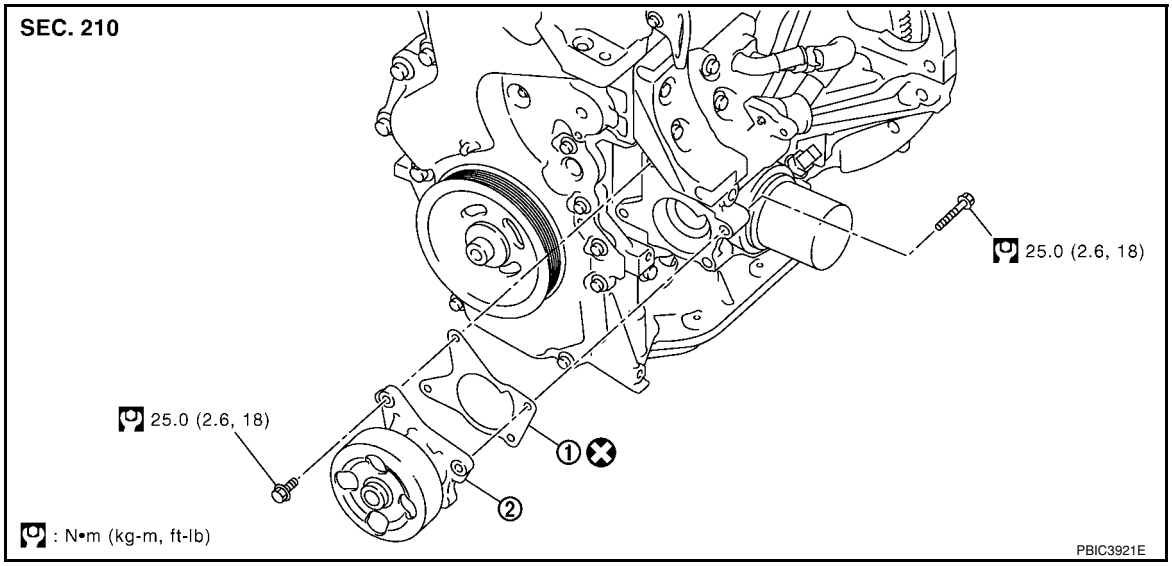

1. Gasket
2. Water pump

Removal and Installation

INFOID:0000000001702540

REMOVAL

1. Drain engine coolant. Refer to CO-8, "Changing Engine Coolant".
   CAUTION:
   Perform this step when the engine is cold.
2. Remove drive belt auto-tensioner. Refer to EM-37.
3. Remove water pump.
   CAUTION:
   - **Handle water pump vane so that it does not contact any other parts.**
   - **Water pump cannot be disassembled and should be replaced as a unit.**

INSPECTION AFTER REMOVAL

- Visually check that there is no significant dirt or rusting on water pump body and vane (A).
- Make sure that there is no looseness in vane shaft, and that it turns smoothly when rotated by hand.
- Replace water pump, if necessary.

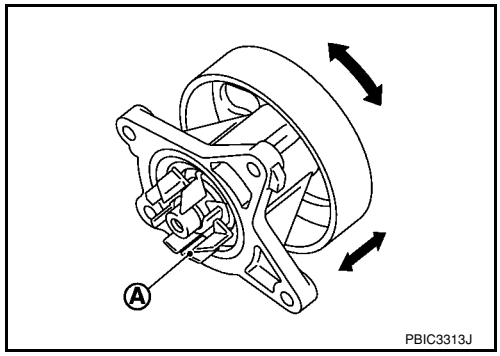

INSTALLATION

Installation is in the reverse order of removal.

INSPECTION AFTER INSTALLATION

- Check for leaks of engine coolant. Refer to CO-8, "Inspection".
- Start and warm up the engine. Visually check if there is no leaks of engine coolant.

THERMOSTAT

Component

INFOID:0000000001702541

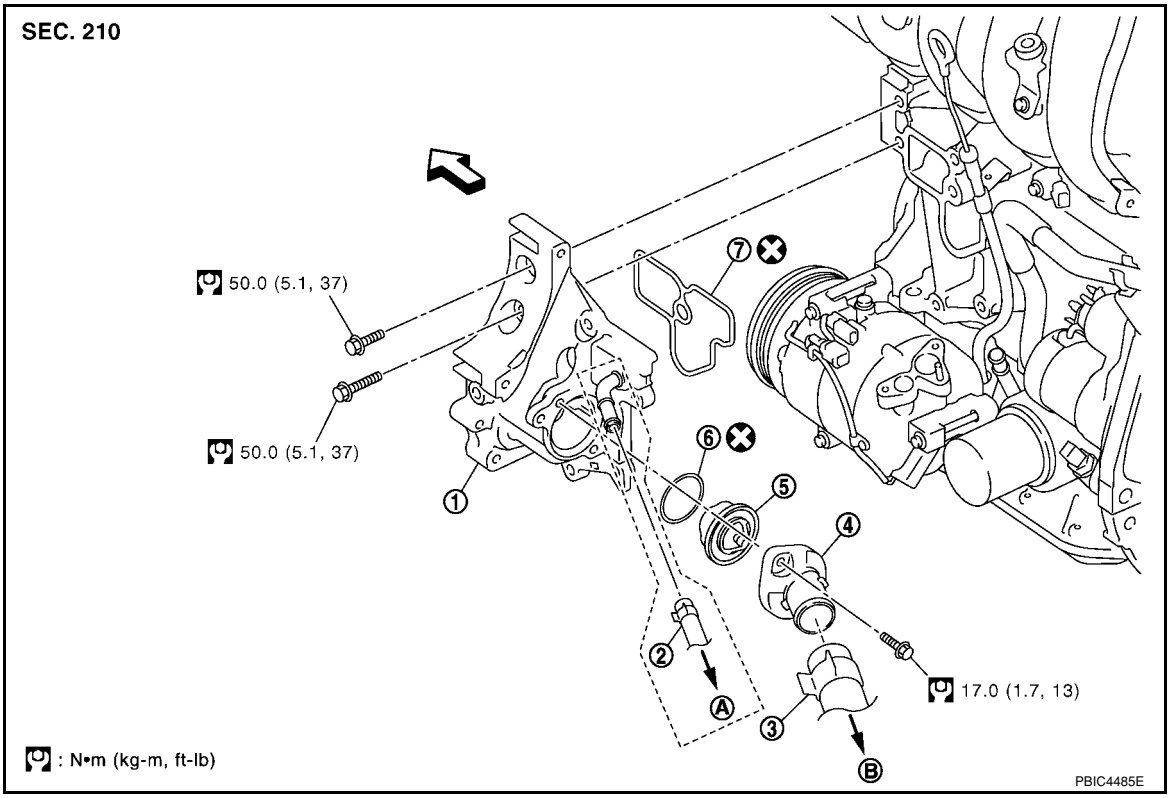

1. Thermostat housing	2. Water hose (models with oil cooler)	3. Radiator hose (lower)
4. Water inlet	5. Thermostat	6. Rubber ring
7. Gasket	A. To oil cooler	B. To radiator
⇦ Engine front		

Removal and Installation

INFOID:0000000001702542

REMOVAL

1. Drain engine coolant. Refer to CO-8, "Changing Engine Coolant".
2. Remove water inlet.
3. Remove thermostat.
4. Remove water pump. Refer to CO-16.
5. Remove thermostat housing.

INSPECTION AFTER REMOVAL

- Place a thread (A) so that it is caught in the valves of thermostat (1). Immerse fully in a container (B) filled with water. Heat while stirring.
- The valve opening temperature is the temperature at which the valve opens and falls from the thread.
- Continue heating. Check the full open valve lift amount.
- After checking the maximum valve lift amount, lower the water temperature and check the valve closing temperature.

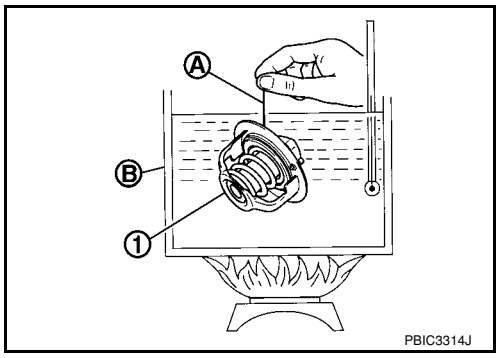

Items	Thermostat
Valve opening temperature	80.5 - 83.5°C (177 - 182°F)
Maximum valve lift	8 mm/ 95°C (0.315 in/ 203°F)
Valve closing temperature	77°C (171°F)

- If out of the specification, replace thermostat.

INSTALLATION

Installation is in the reverse order of removal.

Thermostat

CAUTION:

Replace the rubber ring with a new one.

- Install thermostat while making rubber ring (1) groove fit to thermostat flange (A) around the whole circumference.

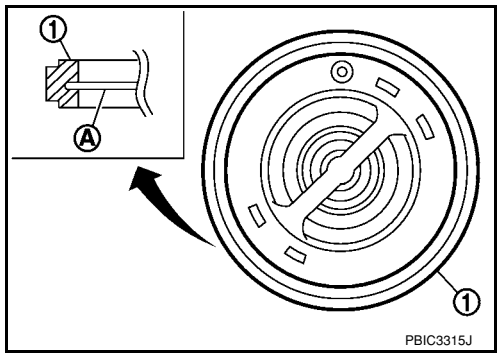

- Install thermostat (1) into the thermostat housing (2) with jiggle valve (A) facing upwards.

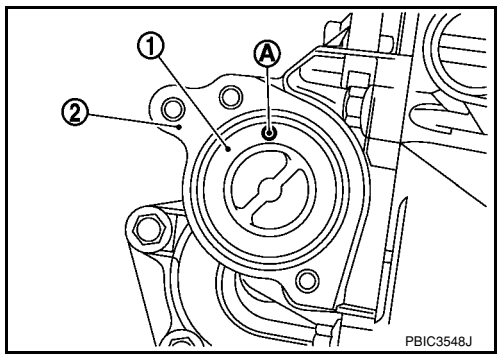

Thermostat Housing

CAUTION:

Replace the rubber ring with a new one.

- Securely insert the rubber ring into the mating groove of thermostat housing and install it.
- Install the thermostat housing to the cylinder block without displacing the gasket from the gasket position.

INSPECTION AFTER INSTALLATION

- Check for leaks of engine coolant. Refer to CO-8, "Inspection".
- Start and warm up the engine. Visually check for engine coolant leaks.

WATER OUTLET AND WATER CONTROL VALVE

Component

INFOID:0000000001702543

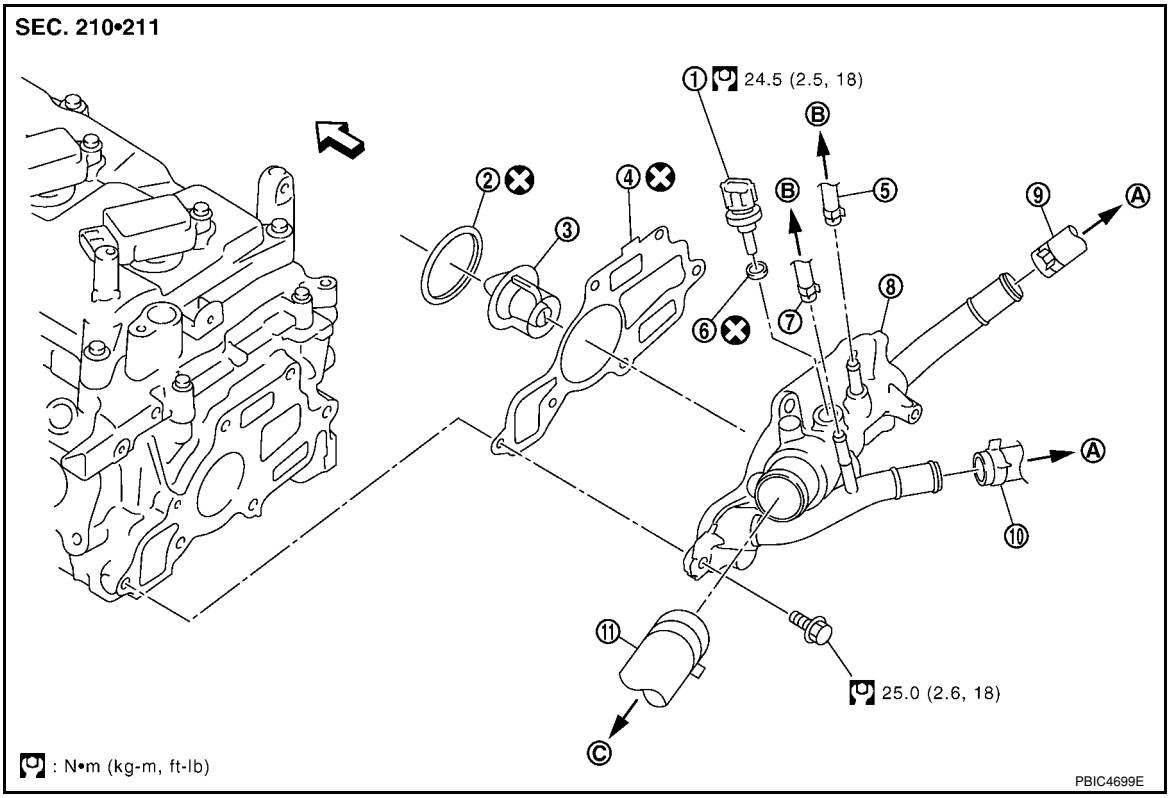

1.	Engine coolant temperature sensor	2.	Rubber ring	3.	Water control valve
4.	Gasket	5.	Water hose	6.	Gasket
7.	Water hose	8.	Water outlet	9.	Heater hose
10.	Heater hose	11.	Radiator hose (upper)	⇦	Front
A.	To heater	B.	To electric throttle control actuator	C.	To radiator

Removal and Installation

INFOID:0000000001702544

REMOVAL

1. Drain engine coolant. Refer to CO-8, "Changing Engine Coolant".
   CAUTION:
   Perform this step when the engine is cold.
2. Remove air duct. Refer to EM-16, "Component".
3. Remove radiator hose (upper). Refer to CO-11, "Component".
4. Remove heater hoses and water hoses.
5. Remove water outlet.
6. Remove water control valve.
7. Remove engine coolant temperature sensor, if necessary.
   CAUTION:
   - **Handle carefully to avoid any shock to engine coolant temperature sensor.**
   - **Replace the gasket with a new one.**

INSPECTION AFTER REMOVAL

- Place a thread (A) so that it is caught in the valves of water control valve (1). Immerse fully in a container (B) filled with water. Heat while stirring.
- The valve opening temperature is the temperature at which the valve opens and falls from the thread.
- Continue heating. Check the full open valve lift amount.
  NOTE:
  The maximum valve lift amount standard temperature for water control valve is the reference value.
- After checking the maximum valve lift amount, lower the water temperature and check the valve closing temperature.

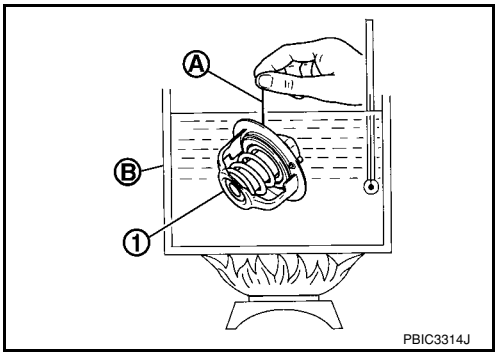

Valve opening temperature	93.5 - 96.5°C (200 - 206°F)
Maximum valve lift	8 mm/ 108°C (0.315 in/ 226°F)
Valve closing temperature	90°C (194°F)

- If out of the specification, replace water control valve.

INSTALLATION

Installation is in the reverse order of removal.

Water Control Valve

CAUTION:

Replace the rubber ring with a new one.

- Install water control valve while making rubber ring (1) groove fit to water control valve flange (A) around the whole circumference.

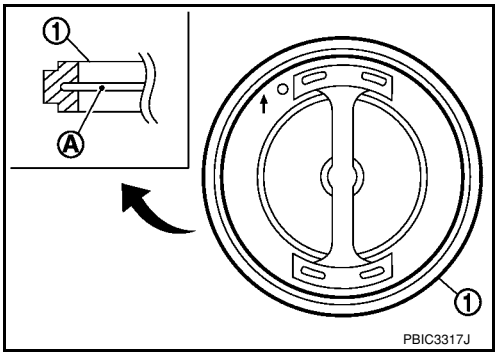

- While the mark (A) points to up, install water control valve (2) with frame center (B) facing straight upward into water outlet (1).

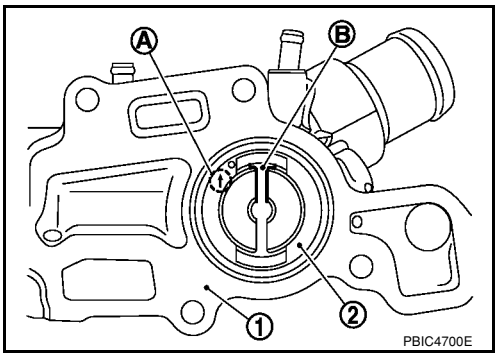

Water Outlet

Install the water control valve to the cylinder head without displacing the valve from the valve position.

Water Hoses

Install water hoses (3),(5) as shown.
- Electric throttle control actuator (1)
- Clamp (2)
- Water outlet (4)
- Paint mark (A)
- Clamp shall not interfere with the bulged area (B)

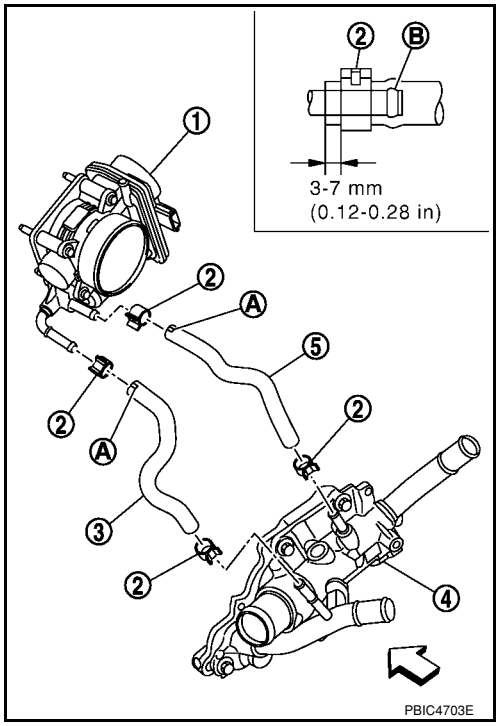

INSPECTION AFTER INSTALLATION

- Check for leaks of engine coolant. Refer to CO-8, "Inspection".
- Start and warm up the engine. Visually check if there is no leaks of engine coolant.

SERVICE DATA AND SPECIFICATIONS (SDS)

Standard and Limit

INFOID:0000000001702545

CAPACITY

Unit: ℓ (US qt, Imp qt)

Engine coolant capacity (with reservoir tank at “MAX” level)	Approx. 6.8 (7 1/4, 6.0)

THERMOSTAT

Valve opening temperature	80.5 - 83.5°C (177 - 182°F)
Maximum valve lift	8 mm/ 95°C (0.315 in/ 203°F)
Valve closing temperature	77°C (171°F)

WATER CONTROL VALVE

Valve opening temperature	93.5 - 96.5°C (200 - 206°F)
Maximum valve lift	8 mm/ 108°C (0.315 in/ 226°F)
Valve closing temperature	90°C (194°F)

RADIATOR

Unit: kPa (bar, kg/cm^2, psi)

Cap relief pressure	Standard	78 - 98 (0.78 - 0.98, 0.8 - 1.0, 11- 14)
	Limit	59 (0.59, 0.6, 9)
Leakage test pressure		157 (1.57, 1.6, 23)

SECTION CVT

CVT

CONTENTS

SERVICE INFORMATION 5

INDEX FOR DTC 5
Alphabetical Index 5
DTC No. Index 5

PRECAUTIONS 7
Precaution for Supplemental Restraint System (SRS) "AIR BAG" and "SEAT BELT PRE-TENSIONER" 7
Precaution Necessary for Steering Wheel Rotation After Battery Disconnect 7
Precaution for On Board Diagnosis (OBD) System of CVT and Engine 7
Service After Replacing TCM and Transaxle Assembly 8
Removal and Installation Procedure for CVT Unit Connector 9
Precaution 10
Service Notice or Precaution 11

PREPARATION 12
Special Service Tool 12
Commercial Service Tool 12

CVT FLUID 13
Checking CVT Fluid 13
Changing CVT Fluid 14
CVT Fluid Cooler Cleaning 14

CVT SYSTEM 18
Cross-Sectional View - RE0F08A 18
Control System 19
Hydraulic Control System 20
TCM Function 20
CAN Communication 21
Input/Output Signal of TCM 22
Line Pressure and Secondary Pressure Control 22
Shift Control 23
Lock-up and Select Control 24
Control Valve 25

ON BOARD DIAGNOSTIC (OBD) SYSTEM 26
Introduction 26
OBD-II Function for CVT System 26
One or Two Trip Detection Logic of OBD-II 26
OBD-II Diagnostic Trouble Code (DTC) 26
Malfunction Indicator Lamp (MIL) 27

TROUBLE DIAGNOSIS 29
DTC Inspection Priority Chart 29
Fail-Safe 29
How to Perform Trouble Diagnosis for Quick and Accurate Repair 30
CVT Electrical Parts Location 35
Circuit Diagram 36
Inspections before Trouble Diagnosis 36
Road Test 40
Check before Engine Is Started 41
Check at Idle 41
Cruise Test 43
Vehicle Speed When Shifting Gears 45
TCM Terminal and Reference Value 45
CONSULT-III Function (TRANSMISSION) 47
Diagnosis Procedure without CONSULT-III 55

DTC U1000 CAN COMMUNICATION LINE 56
Description 56
On Board Diagnosis Logic 56
Possible Cause 56
DTC Confirmation Procedure 56
Wiring Diagram - CVT - CAN 57
Diagnosis Procedure 58

DTC U1010 TRANSMISSION CONTROL MODULE (CAN) 59
Description 59
On Board Diagnosis Logic 59
Possible Cause 59
DTC Confirmation Procedure 59
Diagnosis Procedure 59

DTC P0615 START SIGNAL CIRCUIT 60

Description 60
CONSULT-III Reference Value in Data Monitor Mode 60
On Board Diagnosis Logic 60
Possible Cause 60
DTC Confirmation Procedure 60
Wiring Diagram - CVT - STSIG 61
Diagnosis Procedure 62

DTC P0703 STOP LAMP SWITCH CIRCUIT ... 63
Description 63
CONSULT-III Reference Value in Data Monitor Mode 63
On Board Diagnosis Logic 63
Possible Cause 63
DTC Confirmation Procedure 63
Diagnosis Procedure 63

DTC P0705 PARK/NEUTRAL POSITION SWITCH 65
Description 65
CONSULT-III Reference Value in Data Monitor Mode 65
On Board Diagnosis Logic 65
Possible Cause 65
DTC Confirmation Procedure 65
Wiring Diagram - CVT - PNP/SW 67
Diagnosis Procedure 68
Component Inspection 70

DTC P0710 CVT FLUID TEMPERATURE SENSOR CIRCUIT 71
Description 71
CONSULT-III Reference Value in Data Monitor Mode 71
On Board Diagnosis Logic 71
Possible Cause 71
DTC Confirmation Procedure 71
Wiring Diagram - CVT - FTS 72
Diagnosis Procedure 73
Component Inspection 74

DTC P0715 INPUT SPEED SENSOR CIRCUIT (PRI SPEED SENSOR) 76
Description 76
CONSULT-III Reference Value in Data Monitor Mode 76
On Board Diagnosis Logic 76
Possible Cause 76
DTC Confirmation Procedure 76
Wiring Diagram - CVT - PRSCVT 77
Diagnosis Procedure 78

DTC P0720 VEHICLE SPEED SENSOR CVT (SECONDARY SPEED SENSOR) 80
Description 80
CONSULT-III Reference Value in Data Monitor Mode 80
On Board Diagnosis Logic 80
Possible Cause 80
DTC Confirmation Procedure 80
Wiring Diagram - CVT - SESCVT 81
Diagnosis Procedure 82

DTC P0725 ENGINE SPEED SIGNAL 85
Description 85
CONSULT-III Reference Value in Data Monitor Mode 85
On Board Diagnosis Logic 85
Possible Cause 85
DTC Confirmation Procedure 85
Diagnosis Procedure 85

DTC P0730 BELT DAMAGE 87
Description 87
CONSULT-III Reference Value in Data Monitor Mode 87
On Board Diagnosis Logic 87
Possible Cause 87
DTC Confirmation Procedure 87
Diagnosis Procedure 87

DTC P0740 TORQUE CONVERTER CLUTCH SOLENOID VALVE 88
Description 88
CONSULT-III Reference Value in Data Monitor Mode 88
On Board Diagnosis Logic 88
Possible Cause 88
DTC Confirmation Procedure 88
Wiring Diagram - CVT - TCV 89
Diagnosis Procedure 90
Component Inspection 91

DTC P0744 A/T TCC S/V FUNCTION (LOCK-UP) 93
Description 93
CONSULT-III Reference Value in Data Monitor Mode 93
On Board Diagnosis Logic 93
Possible Cause 93
DTC Confirmation Procedure 93
Diagnosis Procedure 93

DTC P0745 LINE PRESSURE SOLENOID VALVE 95
Description 95
CONSULT-III Reference Value in Data Monitor Mode 95
On Board Diagnosis Logic 95
Possible Cause 95
DTC Confirmation Procedure 95
Wiring Diagram - CVT - LPSV 96
Diagnosis Procedure 97
Component Inspection 98

DTC P0746 PRESSURE CONTROL SOLENOID A PERFORMANCE (LINE PRESSURE SOLENOID VALVE) 100
Description 100

CONSULT-III Reference Value in Data Monitor Mode 100
On Board Diagnosis Logic 100
Possible Cause 100
DTC Confirmation Procedure 100
Diagnosis Procedure 100

DTC P0776 PRESSURE CONTROL SOLENOID B PERFORMANCE (SEC PRESSURE SOLENOID VALVE) 102
Description 102
CONSULT-III Reference Value in Data Monitor Mode 102
On Board Diagnosis Logic 102
Possible Cause 102
DTC Confirmation Procedure 102
Diagnosis Procedure 102

DTC P0778 PRESSURE CONTROL SOLENOID B ELECTRICAL (SEC PRESSURE SOLENOID VALVE) 104
Description 104
CONSULT-III Reference Value in Data Monitor Mode 104
On Board Diagnosis Logic 104
Possible Cause 104
DTC Confirmation Procedure 104
Wiring Diagram - CVT - SECPSV 105
Diagnosis Procedure 106
Component Inspection 107

DTC P0840 TRANSMISSION FLUID PRESSURE SENSOR A CIRCUIT (SEC PRESSURE SENSOR) 109
Description 109
CONSULT-III Reference Value in Data Monitor Mode 109
On Board Diagnosis Logic 109
Possible Cause 109
DTC Confirmation Procedure 109
Wiring Diagram - CVT - SECPS 110
Diagnosis Procedure 111

DTC P0841 PRESSURE SENSOR FUNCTION 113
Description 113
CONSULT-III Reference Value in Data Monitor Mode 113
On Board Diagnosis Logic 113
Possible Cause 113
DTC Confirmation Procedure 113
Diagnosis Procedure 113

DTC P0845 TRANSMISSION FLUID PRESSURE SENSOR B CIRCUIT (PRI PRESSURE SENSOR) 115
Description 115
CONSULT-III Reference Value in Data Monitor Mode 115
On Board Diagnosis Logic 115
Possible Cause 115
DTC Confirmation Procedure 115
Wiring Diagram - CVT - PRIPS 116
Diagnosis Procedure 117

DTC P0868 SECONDARY PRESSURE DOWN 119
Description 119
CONSULT-III Reference Value in Data Monitor Mode 119
On Board Diagnosis Logic 119
Possible Cause 119
DTC Confirmation Procedure 119
Diagnosis Procedure 119

DTC P1701 TRANSMISSION CONTROL MODULE (POWER SUPPLY) 121
Description 121
On Board Diagnosis Logic 121
Possible Cause 121
DTC Confirmation Procedure 121
Wiring Diagram - CVT - POWER 122
Diagnosis Procedure 123

DTC P1705 THROTTLE POSITION SENSOR. 125
Description 125
CONSULT-III Reference Value in Data Monitor Mode 125
On Board Diagnosis Logic 125
Possible Cause 125
DTC Confirmation Procedure 125
Diagnosis Procedure 125

DTC P1722 ESTM VEHICLE SPEED SIGNAL. 127
Description 127
CONSULT-III Reference Value in Data Monitor Mode 127
On Board Diagnosis Logic 127
Possible Cause 127
DTC Confirmation Procedure 127
Diagnosis Procedure 127

DTC P1723 CVT SPEED SENSOR FUNCTION 129
Description 129
On Board Diagnosis Logic 129
Possible Cause 129
DTC Confirmation Procedure 129
Diagnosis Procedure 129

DTC P1726 ELECTRIC THROTTLE CONTROL SYSTEM 131
Description 131
On Board Diagnosis Logic 131
Possible Cause 131
DTC Confirmation Procedure 131
Diagnosis Procedure 131

DTC P1740 LOCK-UP SELECT SOLENOID VALVE CIRCUIT 132
Description 132
CONSULT-III Reference Value in Data Monitor Mode 132
On Board Diagnosis Logic 132
Possible Cause 132
DTC Confirmation Procedure 132
Wiring Diagram - CVT - L/USSV 133
Diagnosis Procedure 134
Component Inspection 135

DTC P1745 LINE PRESSURE CONTROL 136
Description 136
On Board Diagnosis Logic 136
Possible Cause 136
DTC Confirmation Procedure 136
Diagnosis Procedure 136

DTC P1777 STEP MOTOR - CIRCUIT 137
Description 137
CONSULT-III Reference Value in Data Monitor Mode 137
On Board Diagnosis Logic 137
Possible Cause 137
DTC Confirmation Procedure 137
Wiring Diagram - CVT - STM 138
Diagnosis Procedure 139
Component Inspection 140

DTC P1778 STEP MOTOR - FUNCTION 141
Description 141
CONSULT-III Reference Value in Data Monitor Mode 141
On Board Diagnosis Logic 141
Possible Cause 141
DTC Confirmation Procedure 141
Diagnosis Procedure 142

OVERDRIVE CONTROL SWITCH 143
Description 143
CONSULT-III Reference Value in Data Monitor Mode 143
Wiring Diagram - CVT - ODSW 144
Diagnosis Procedure 144
Component Inspection 146

SHIFT POSITION INDICATOR CIRCUIT 148
Description 148
CONSULT-III Reference Value in Data Monitor Mode 148
Diagnosis Procedure 148

TROUBLE DIAGNOSIS FOR SYMPTOMS 149
Wiring Diagram - CVT - NONDTC 149
O/D OFF Indicator Lamp Does Not Come On 151
Engine Cannot Be Started in "P" and "N" Position. 153
In "P" Position, Vehicle Moves Forward or Backward When Pushed 153
In "N" Position, Vehicle Moves 154
Large Shock "N" → "R" Position 154
Vehicle Does Not Creep Backward in "R" Position. 155
Vehicle Does Not Creep Forward in "D" or "L" Position 156
Vehicle Speed Does Not Change in "L" Position . 157
Vehicle Speed Does Not Change in overdrive-off mode 158
Vehicle Speed Does Not Change in "D" Position . 159
Vehicle Does Not Decelerate by Engine Brake ... 159

TRANSMISSION CONTROL MODULE 161
Removal and Installation 161

CVT SHIFT LOCK SYSTEM 162
Description 162
Shift Lock System Electrical Parts Location 162
Wiring Diagram - CVT - SHIFT 163
Diagnosis Procedure 163

SHIFT CONTROL SYSTEM 167
Removal and Installation 167
Control Device Disassembly and Assembly 170
Selector Lever Knob Removal and Installation 170
Adjustment of CVT Position 171
Checking of CVT Position 171

KEY INTERLOCK CABLE 173
Removal and Installation 173

AIR BREATHER HOSE 176
Removal and Installation 176

DIFFERENTIAL SIDE OIL SEAL 177
Removal and Installation 177

TRANSAXLE ASSEMBLY 178
Removal and Installation 178

SERVICE DATA AND SPECIFICATIONS (SDS) 181
General Specification 181
Vehicle Speed When Shifting Gears 181
Stall Speed 181
Line Pressure 181
Solenoid Valves 182
CVT Fluid Temperature Sensor 182
Primary Speed Sensor 182
Secondary Speed Sensor 182
Removal and Installation 182

SERVICE INFORMATION

INDEX FOR DTC

Alphabetical Index

INFOID:0000000001703422

NOTE:
If DTC "U1000 CAN COMM CIRCUIT" is displayed with other DTCs, first perform the trouble diagnosis for "DTC U1000 CAN COMMUNICATION LINE". Refer to CVT-56.

Items (CONSULT-III screen terms)	DTC		Reference page
	OBD-II	Except OBD-II	
	CONSULT-III GST*1	CONSULT-III only "TRANSMISSION"	
A/T TCC S/V FNCTN	P0744	P0744	CVT-93
ATF TEMP SEN/CIRC	P0710	P0710	CVT-71
BELT DAMG	—	P0730	CVT-87
BRAKE SW/CIRC	—	P0703	CVT-63
CAN COMM CIRCUIT	U1000	U1000	CVT-56
CONTROL UNIT(CAN)	U1010	U1010	CVT-59
CVT SPD SEN/FNCTN	—	P1723	CVT-129
ENGINE SPEED SIG	—	P0725	CVT-85
ELEC TH CONTROL	—	P1726	CVT-131
ESTM VEH SPD SIG*2	—	P1722	CVT-127
INPUT SPD SEN/CIRC	P0715	P0715	CVT-76
L/PRESS CONTROL	—	P1745	CVT-136
L/PRESS SOL/CIRC	P0745	P0745	CVT-95
LU-SLCT SOL/CIRC	P1740	P1740	CVT-132
PNP SW/CIRC	P0705	P0705	CVT-65
PRESS SEN/FNCTN	—	P0841	CVT-113
PRS CNT SOL/A FCTN	P0746	P0746	CVT-100
PRS CNT SOL/B CIRC	P0778	P0778	CVT-104
PRS CNT SOL/B FCTN	P0776	P0776	CVT-102
SEC/PRESS DOWN	—	P0868	CVT-119
STARTER RELAY/CIRC	—	P0615	CVT-60
STEP MOTR CIRC	P1777	P1777	CVT-137
STEP MOTR/FNC	P1778	P1778	CVT-141
TCC SOLENOID/CIRC	P0740	P0740	CVT-88
TCM-POWER SUPPLY	—	P1701	CVT-121
TP SEN/CIRC A/T	—	P1705	CVT-125
TR PRS SENS/A CIRC	P0840	P0840	CVT-109
TR PRS SENS/B CIRC	P0845	P0845	CVT-115
VEH SPD SEN/CIR AT	P0720	P0720	CVT-80

*1: These numbers are prescribed by SAE J2012.
*2: Models without ABS does not indicate.

DTC No. Index

INFOID:0000000001703423

NOTE:

If DTC "U1000 CAN COMM CIRCUIT" is displayed with other DTCs, first perform the trouble diagnosis for "DTC U1000 CAN COMMUNICATION LINE". Refer to CVT-56.

DTC		Items (CONSULT-III screen terms)	Reference page
OBD-II	Except OBD-II		
CONSULT-III GST*1	CONSULT-III only "TRANSMISSION"		
—	P0615	STARTER RELAY/CIRC	CVT-60
—	P0703	BRAKE SW/CIRC	CVT-63
P0705	P0705	PNP SW/CIRC	CVT-65
P0710	P0710	ATF TEMP SEN/CIRC	CVT-71
P0715	P0715	INPUT SPD SEN/CIRC	CVT-76
P0720	P0720	VEH SPD SEN/CIR AT	CVT-80
—	P0725	ENGINE SPEED SIG	CVT-85
—	P0730	BELT DAMG	CVT-87
P0740	P0740	TCC SOLENOID/CIRC	CVT-88
P0744	P0744	A/T TCC S/V FNCTN	CVT-93
P0745	P0745	L/PRESS SOL/CIRC	CVT-95
P0746	P0746	PRS CNT SOL/A FCTN	CVT-100
P0776	P0776	PRS CNT SOL/B FCTN	CVT-102
P0778	P0778	PRS CNT SOL/B CIRC	CVT-104
P0840	P0840	TR PRS SENS/A CIRC	CVT-109
—	P0841	PRESS SEN/FNCTN	CVT-113
P0845	P0845	TR PRS SENS/B CIRC	CVT-115
—	P0868	SEC/PRESS DOWN	CVT-119
—	P1701	TCM-POWER SUPPLY	CVT-121
—	P1705	TP SEN/CIRC A/T	CVT-125
—	P1722	ESTM VEH SPD SIG*2	CVT-127
—	P1723	CVT SPD SEN/FNCTN	CVT-129
—	P1726	ELEC TH CONTROL	CVT-131
P1740	P1740	LU-SLCT SOL/CIRC	CVT-132
—	P1745	L/PRESS CONTROL	CVT-136
P1777	P1777	STEP MOTR CIRC	CVT-137
P1778	P1778	STEP MOTR/FNC	CVT-141
U1000	U1000	CAN COMM CIRCUIT	CVT-56
U1010	U1010	CONTROL UNIT(CAN)	CVT-59

*1: These numbers are prescribed by SAE J2012.
*2: Models without ABS does not indicate.

PRECAUTIONS

Precaution for Supplemental Restraint System (SRS) "AIR BAG" and "SEAT BELT PRE-TENSIONER"

INFOID:0000000001703424

The Supplemental Restraint System such as “AIR BAG” and “SEAT BELT PRE-TENSIONER”, used along with a front seat belt, helps to reduce the risk or severity of injury to the driver and front passenger for certain types of collision. This system includes seat belt switch inputs and dual stage front air bag modules. The SRS system uses the seat belt switches to determine the front air bag deployment, and may only deploy one front air bag, depending on the severity of a collision and whether the front occupants are belted or unbelted.
Information necessary to service the system safely is included in the SRS and SB section of this Service Manual.

WARNING:

- **To avoid rendering the SRS inoperative, which could increase the risk of personal injury or death in the event of a collision which would result in air bag inflation, all maintenance must be performed by an authorized NISSAN/INFINITI dealer.**
- **Improper maintenance, including incorrect removal and installation of the SRS, can lead to personal injury caused by unintentional activation of the system. For removal of Spiral Cable and Air Bag Module, see the SRS section.**
- **Do not use electrical test equipment on any circuit related to the SRS unless instructed to in this Service Manual. SRS wiring harnesses can be identified by yellow and/or orange harnesses or harness connectors.**

Precaution Necessary for Steering Wheel Rotation After Battery Disconnect

INFOID:0000000001703425

NOTE:

- This Procedure is applied only to models with Intelligent Key system and NVIS/IVIS (NISSAN/INFINITI VEHICLE IMMOBILIZER SYSTEM - NATS).
- Remove and install all control units after disconnecting both battery cables with the ignition knob in the ″LOCK″ position.
- Always use CONSULT-III to perform self-diagnosis as a part of each function inspection after finishing work. If DTC is detected, perform trouble diagnosis according to self-diagnostic results.

For models equipped with the Intelligent Key system and NVIS/IVIS, an electrically controlled steering lock mechanism is adopted on the key cylinder.
For this reason, if the battery is disconnected or if the battery is discharged, the steering wheel will lock and steering wheel rotation will become impossible.
If steering wheel rotation is required when battery power is interrupted, follow the procedure below before starting the repair operation.

OPERATION PROCEDURE

1. Connect both battery cables.
   NOTE:
   Supply power using jumper cables if battery is discharged.
2. Use the Intelligent Key or mechanical key to turn the ignition switch to the ″ACC″ position. At this time, the steering lock will be released.
3. Disconnect both battery cables. The steering lock will remain released and the steering wheel can be rotated.
4. Perform the necessary repair operation.
5. When the repair work is completed, return the ignition switch to the ″LOCK″ position before connecting the battery cables. (At this time, the steering lock mechanism will engage.)
6. Perform a self-diagnosis check of all control units using CONSULT-III.

Precaution for On Board Diagnosis (OBD) System of CVT and Engine

INFOID:0000000001703426

The ECM has an on board diagnostic system. It will light up the malfunction indicator lamp (MIL) to warn the driver of a malfunction causing emission deterioration.

CAUTION:

- **Be sure to turn the ignition switch OFF and disconnect the battery cable from the negative terminal before any repair or inspection work. The open/short circuit of related switches, sensors, solenoid valves, etc. will cause the MIL to light up.**
- **Be sure to connect and lock the connectors securely after work. A loose (unlocked) connector will cause the MIL to light up due to an open circuit. (Be sure the connector is free from water, grease, dirt, bent terminals, etc.)**
- **Be sure to route and secure the harnesses properly after work. Interference of the harness with a bracket, etc. may cause the MIL to light up due to a short circuit.**
- **Be sure to connect rubber tubes properly after work. A misconnected or disconnected rubber tube may cause the MIL to light up due to a malfunction of the EVAP system or fuel injection system, etc.**
- **Be sure to erase the unnecessary malfunction information (repairs completed) from the TCM and ECM before returning the vehicle to the customer.**

Service After Replacing TCM and Transaxle Assembly

INFOID:0000000001703427

SERVICE AFTER REPLACING TCM AND TRANSAXLE ASSEMBLY

Perform the applicable service in the following sheet when replacing TCM or transaxle assembly

CAUTION:

- **Do not start the engine until the service is completed.**
- **“A/T C/U POWER SUPPLY [P1701]” may be indicated soon after replacing TCM or transaxle assembly (after erasing the memory at the pattern B). Restart the self-diagnosis after erasing the self-diagnosis result. Check that no error is detected.**

TCM	CVT assembly	Service pattern
Replace the new unit.	Do not replace the unit.	"PATTERN A"
Do not replace the unit.	Replace the new or old unit.	"PATTERN B"
Replace the old unit.	Do not replace the unit.	
	Replace the new or old unit.	
Replace the new unit.	Replace the new or old unit.	"PATTERN C"

NOTE:

Old unit means that the unit has been already used for another vehicle.

PATTERN A

1. Shift the selector lever to “P” position after replacing TCM. Turn the ignition switch ON.
2. Check that the shift position indicator in the combination meter turns ON (It indicates approximately 1 or 2 seconds after turning the ignition switch ON.)
   - Check the following items if the shift position indicator does not turn ON. Repair or replace the shift position indicator if necessary.
   - The harness between TCM and ROM ASSY in the transaxle assembly is open or short.
   - Cable disconnected, loosen, or bent from the connector housing.

PATTERN B

1. Turn the ignition switch ON after replacing each part.
2. Start engine.
   CAUTION:
   Do not start the driving.
3. Touch CONSULT-III screen in the order of “START (NISSAN BASED VHCL)”, “TRANSMISSION”, “DATA MONITOR”, and “MAIN SIGNALS”.
4. Warm up the transaxle assembly until “ATFTEMPCOUNT” indicates 47 [approximately 20°C (68°F)] or more. Turn the ignition switch OFF.
5. Turn the ignition switch ON.
   CAUTION:
   Do not start engine.
6. Select “SELF-DIAG RESULTS”.
7. Shift the selector lever to “R” position.
8. Depress slightly the accelerator pedal (Pedal angle: 2/8) while depressing the brake pedal.
9. Perform “ERASE”.

10. Shift the selector lever to “R” position after replacing TCM. Turn the ignition switch OFF.
11. Wait approximately 10 minutes after turning the ignition switch OFF.
12. Turn the ignition switch ON while shifting the selector lever to “R” position.
    CAUTION:
    Do not start engine.
13. Select “CALIBRATION DATA”.
14. Check that the value on “CALIBRATION DATA” is same as the data after erasing "Calibration Data".
    - Restart the procedure from step 3 if the values are not same.
15. Shift the selector lever to “P” position.
16. Check that the shift position indicator in the combination meter turns ON (It indicates approximately 1 or 2 seconds after shifting the selector lever to “P” position.)
    - Check the following items if the shift position indicator does not turn ON. Repair or replace the shift position indicator if necessary.
    - The harness between TCM and ROM ASSY in the transaxle assembly is open or short.
    - Cable disconnected, loosen, or bent from the connector housing.
    - Power supply and ground of TCM. Refer to CVT-121.

PATTERN C

1. Replace the transaxle assembly first, and then replace TCM.
2. Perform the service of “PATTERN A”.
   (Perform the service of “Pattern B” if TCM is replaced first.)

Removal and Installation Procedure for CVT Unit Connector

INFOID:0000000001703428

REMOVAL

Rotate bayonet ring counterclockwise, pull out CVT unit harness connector upward and disconnect it.

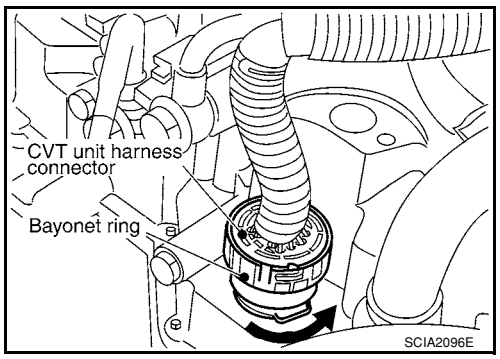

INSTALLATION

1. Align CVT unit harness connector terminal body marking with bayonet ring marking, insert CVT unit harness connector, and then rotate bayonet ring clockwise.

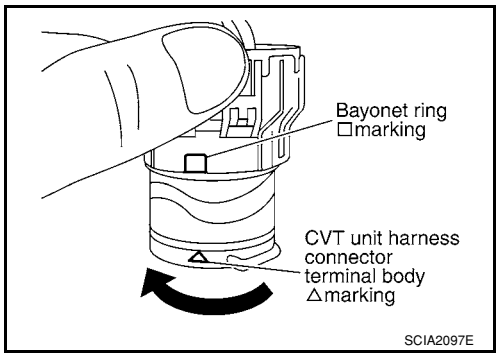

2. Rotate bayonet ring clockwise until CVT unit harness connector terminal body marking is aligned with the bayonet ring marking (linear slit) as shown.

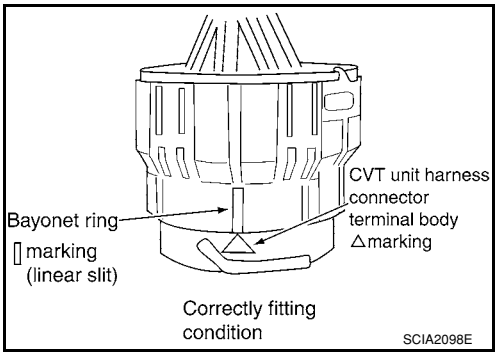

CAUTION:
- **Securely align CVT unit harness connector terminal body marking with bayonet ring marking (linear slit). Do not make a half fit condition as shown.**
- **Do not mistake the bayonet ring marking (linear slit) for other dent portion.**

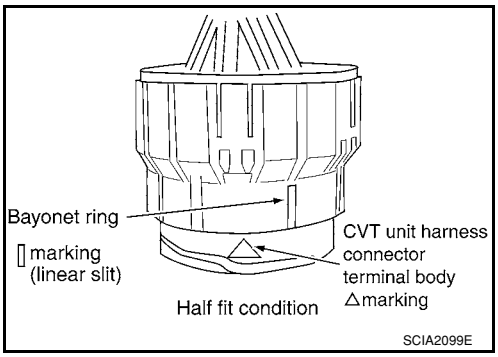

Precaution

INFOID:0000000001703429

NOTE:
If any malfunction occurs in the RE0F08A model transaxle, replace the entire transaxle assembly.

- **Before connecting or disconnecting the TCM harness connector, turn ignition switch OFF and disconnect negative battery cable. Because battery voltage is applied to TCM even if ignition switch is turned OFF.**

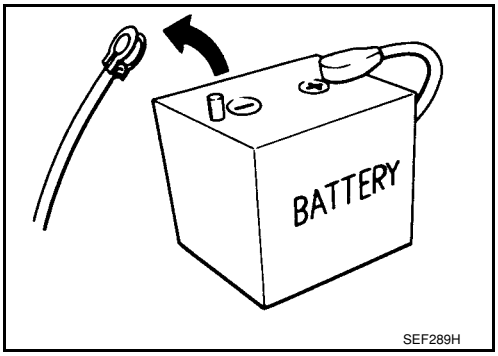

- **When connecting or disconnecting pin connectors into or from TCM, take care not to damage pin terminals (bend or break).**
  When connecting pin connectors make sure that there are not any bends or breaks on TCM pin terminal.

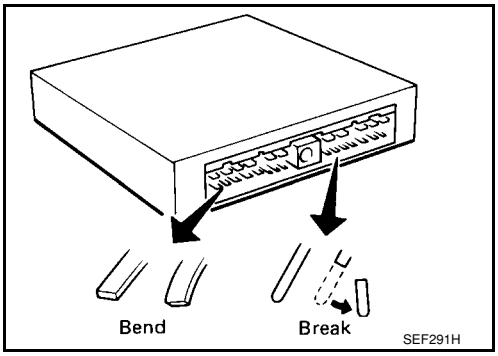

- **Before replacing TCM, perform TCM input/output signal inspection and make sure whether TCM functions properly or not. CVT-45, "TCM Terminal and Reference Value".**

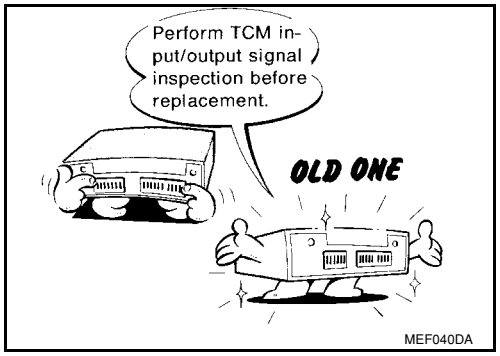

- **After performing each TROUBLE DIAGNOSIS, perform "DTC Confirmation Procedure".**
  If the repair is completed the DTC should not be displayed in the "DTC Confirmation Procedure".
- Always use the specified brand of CVT fluid. Refer to MA-10, "Fluids and Lubricants".
- Use lint-free paper, not cloth rags, during work.
- After replacing the CVT fluid, dispose of the waste oil using the methods prescribed by law, ordinance, etc.

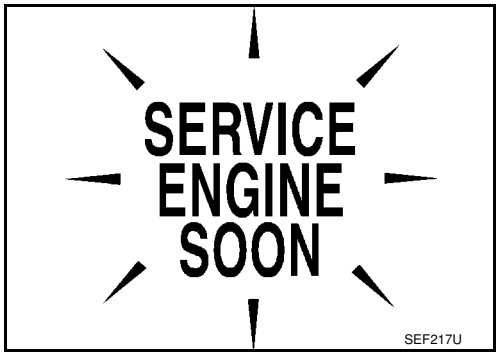

Service Notice or Precaution

INFOID:0000000001703430

CVT FLUID COOLER SERVICE

If CVT fluid contains friction material (clutches, brakes, etc.), or if an CVT is replaced, inspect and clean the CVT fluid cooler mounted in the radiator or replace the radiator. Flush cooler lines using cleaning solvent and compressed air after repair. For CVT fluid cooler cleaning procedure, refer to CVT-14, "CVT Fluid Cooler Cleaning". For radiator replacement, refer to CO-11.

OBD-II SELF-DIAGNOSIS

- CVT self-diagnosis is performed by the TCM in combination with the ECM. The results can be read through the blinking pattern of the malfunction indicator lamp (MIL). Refer to the table on CVT-47, "CONSULT-III Function (TRANSMISSION)" for the indicator used to display each self-diagnostic result.
- The self-diagnostic results indicated by the MIL are automatically stored in both the ECM and TCM memories.
  Always perform the procedure on CVT-26, "OBD-II Diagnostic Trouble Code (DTC)" to complete the repair and avoid unnecessary blinking of the MIL.

For details of OBD-II, refer to EC-46.

- **Certain systems and components, especially those related to OBD, may use the new style slide-locking type harness connector. For description and how to disconnect, refer to PG-65.**

PREPARATION

Special Service Tool

INFOID:0000000001703431

The actual shapes of Kent-Moore tools may differ from those of special service tools illustrated here.

Tool number (Kent-Moore No.) Tool name	Description
— (OTC3492) Oil pressure gauge set 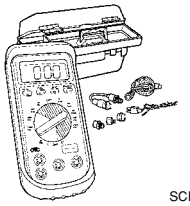 SCIA7531E	Measuring line pressure
— (J-47244) Drift 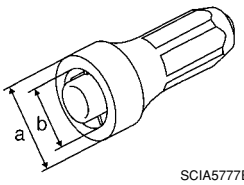 SCIA5777E	Installing differential side oil seal • Transaxle case side (left) **a: 65.83 mm (2.59 in) dia.** **b: 53.85 mm (2.12 in) dia.**
ST33400001 (J-47005) Drift 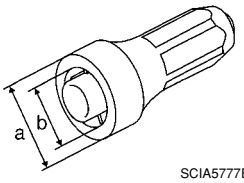 SCIA5777E	Installing differential side oil seal • Converter housing side (right) **a: 69.85 mm (2.75 in) dia.** **b: 49.53 mm (1.95 in) dia.**

Commercial Service Tool

INFOID:0000000001703432

Tool number Tool name	Description
Power tool 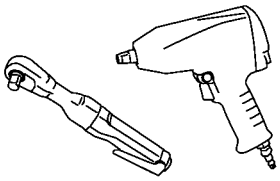 PBIC0190E	Loosening nuts and bolts

CVT FLUID

Checking CVT Fluid

INFOID:0000000001703433

FLUID LEVEL CHECK

Fluid level should be checked with the fluid warmed up to 50 to 80°C (122 to 176°F).

1. Check for fluid leakage.
2. With the engine warmed up, drive the vehicle to warm up the CVT fluid. When ambient temperature is 20°C (68°F), it takes about 10 minutes for the CVT fluid to warm up to 50 to 80°C (122 to 176°F).
3. Park the vehicle on a level surface and set the parking brake.
4. With engine at idle, while depressing brake pedal, move the selector lever throughout the entire shift range and return it to the “P” position.

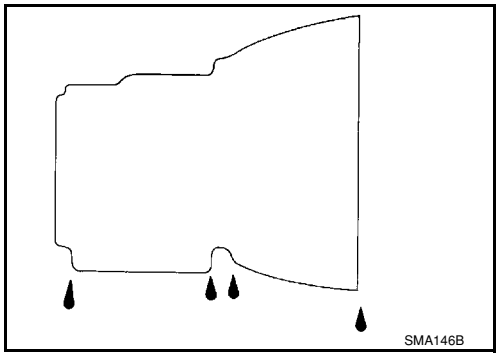

5. Press the tab on the CVT fluid level gauge to release the lock and pull out the CVT fluid level gauge from the CVT fluid charging pipe.

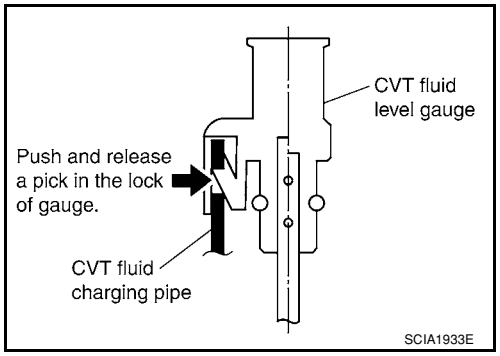

6. Wipe fluid off the CVT fluid level gauge. Then rotate the CVT fluid level gauge 180° and re-insert it into the CVT charging pipe as far as it will go.
   CAUTION:
   Always use lint free paper towels to wipe fluid off the CVT fluid level gauge.

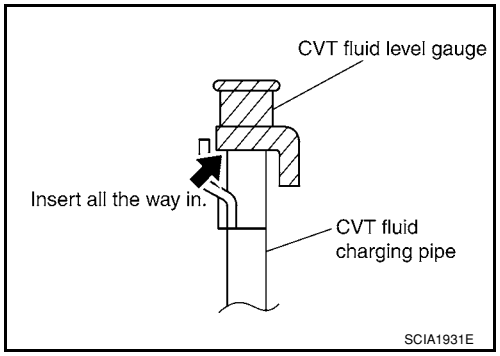

7. Remove the CVT fluid level gauge and check that the fluid level is within the specified range as shown. If the fluid level is at or below the low side of the range, add the necessary specified NISSAN CVT fluid through the CVT charging pipe.

   Fluid grade: Refer to MA-10, "Fluids and Lubricants".

   CAUTION:
   - **Only use specified NISSAN CVT fluid.**
   - **Do not overfill the CVT.**

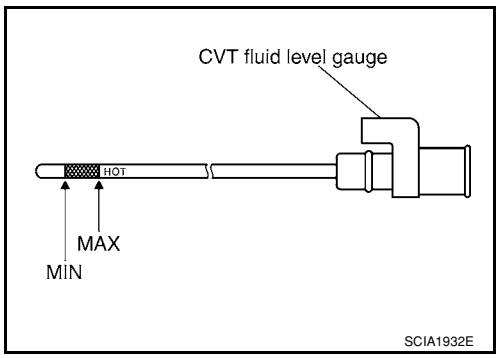

8. Install the CVT fluid level gauge to the CVT fluid charging pipe until it locks.
   CAUTION:
   When CVT fluid level gauge is installed into the CVT fluid charging pipe, make sure that the CVT fluid level gauge is securely locked in place.

FLUID CONDITION CHECK

Fluid status	Conceivable cause	Required operation
Varnished (viscous varnish state)	Clutch, brake scorched	Replace the CVT fluid and check the CVT main unit and the vehicle for malfunctions (wire harness, cooler pipes, etc.)
Milky white or cloudy	Water in the fluid	Replace the CVT fluid and check for places where water is getting in.
Large amount of metal powder mixed in fluid	Unusual wear of sliding parts within CVT	Replace the CVT fluid and check for improper operation of the CVT.

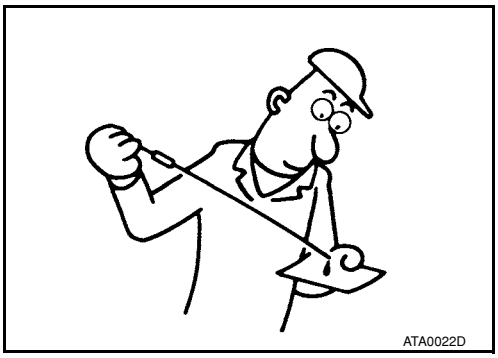

Changing CVT Fluid

INFOID:0000000001703434

1. Warm up CVT fluid by driving the vehicle for 10 minutes.

- ⇦: Vehicle front
- Radiator (2)
- CVT fluid cooler hose [inlet side (3)]
- Transaxle assembly (4)

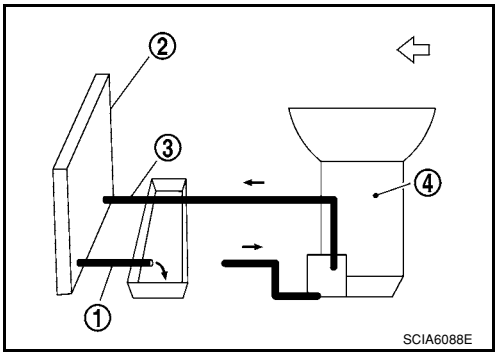

2. Drain CVT fluid from CVT fluid cooler hose [outlet side (1)] and refill with new specified NISSAN CVT fluid in the CVT fluid charging pipe with the engine running at idle speed.

Fluid capacity and grade: **Refer to MA-10, "Fluids and Lubricants".**

CAUTION:
Only use the specified NISSAN CVT fluid.

3. Refill until new CVT fluid comes out from CVT fluid cooler hose [outlet side (1)].
NOTE:
About 30 to 50% extra fluid will be required for this procedure.
4. Check fluid level and condition. Refer to MA-19, "Checking CVT Fluid".
CAUTION:
Delete CVT fluid deterioration date with CONSULT-III after changing CVT fluid. Refer to CVT-47, "CONSULT-III Function (TRANSMISSION)".

CVT Fluid Cooler Cleaning

INFOID:0000000001703435

Whenever a CVT is repaired, overhauled, or replaced, the CVT fluid cooler mounted in the radiator must be inspected and cleaned.
Metal debris and friction material, if present, can be trapped or become deposit in the CVT fluid cooler. This debris can contaminate the newly serviced CVT or, in severe cases, can block or restrict the flow of CVT fluid. In either case, malfunction of the newly serviced CVT may occur.
Debris, if present, may deposit as CVT fluid enters the cooler inlet. It will be necessary to back flush the cooler through the cooler outlet in order to flush out any built up debris.

CVT FLUID COOLER CLEANING PROCEDURE

1. Identify the CVT inlet and outlet fluid cooler hoses.
2. Position an oil pan under the inlet and outlet cooler hoses.

3. Disconnect the fluid cooler inlet and outlet rubber hoses from the steel cooler tubes.
   NOTE:
   Replace the cooler hoses if rubber material from the hose remains on the tube fitting.
4. Allow any CVT fluid that remains in the cooler hoses to drain into the oil pan.

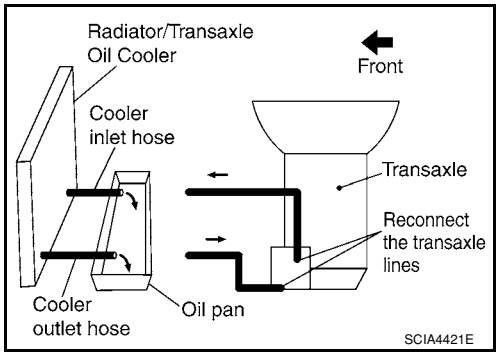

5. Insert the extension adapter hose of a can of Transmission Cooler Cleaner (Nissan P/N 999MP-AM006) into the cooler outlet hose.
   CAUTION:
   - **Wear safety glasses and rubber gloves when spraying the Transmission Cooler Cleaner.**
   - **Spray Transmission Cooler Cleaner only with adequate ventilation.**
   - **Avoid contact with eyes and skin.**
   - **Do not breath vapors or spray mist.**
6. Hold the hose and can as high as possible and spray Transmission Cooler Cleaner in a continuous stream into the cooler outlet hose until CVT fluid flows out of the cooler inlet hose for 5 seconds.

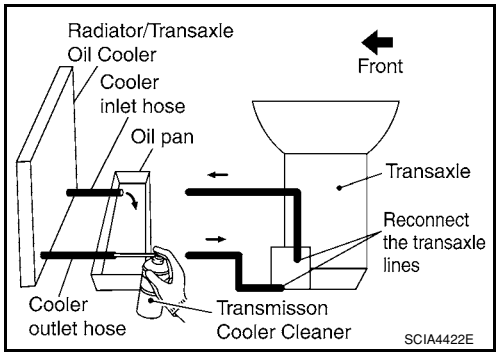

7. Insert the tip of an air gun into the end of the cooler outlet hose.
8. Wrap a shop rag around the air gun tip and of the cooler outlet hose.
9. Blow compressed air regulated to 5 to 9 kg/cm^2 (70 to 130 psi) through the cooler outlet hose for 10 seconds to force out any remaining CVT fluid.
10. Repeat steps 5 through 9 three additional times.
11. Position an oil pan under the banjo bolts that connect the CVT fluid cooler steel lines to the transaxle.
12. Remove the banjo bolts.
13. Flush each steel line from the cooler side back toward the transaxle by spraying Transmission Cooler Cleaner in a continuous stream for 5 seconds.

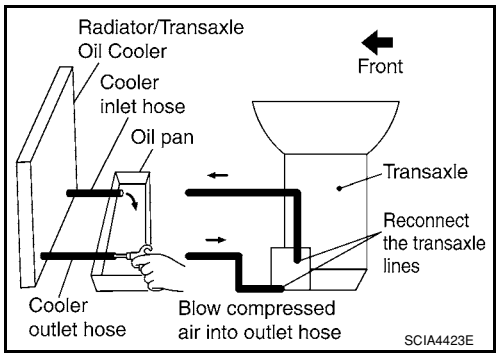

14. Blow compressed air regulated to 5 to 9 kg/cm^2 (70 to 130 psi) through each steel line from the cooler side back toward the transaxle for 10 seconds to force out any remaining CVT fluid.
15. Ensure all debris is removed from the steel cooler lines.
16. Ensure all debris is removed from the banjo bolts and fittings.
17. Perform "CVT FLUID COOLER DIAGNOSIS PROCEDURE".

CVT FLUID COOLER DIAGNOSIS PROCEDURE

NOTE:
Insufficient cleaning of the cooler inlet hose exterior may lead to inaccurate debris identification.

1. Position an oil pan under the transaxle's inlet and outlet cooler hoses.
2. Clean the exterior and tip of the cooler inlet hose.

3. Insert the extension adapter hose of a can of Transmission Cooler Cleaner (Nissan P/N 999MP-AM006) into the cooler outlet hose.

CAUTION:
- **Wear safety glasses and rubber gloves when spraying the Transmission Cooler Cleaner.**
- **Spray Transmission Cooler Cleaner only with adequate ventilation.**
- **Avoid contact with eyes and skin.**
- **Do not breath vapors or spray mist.**

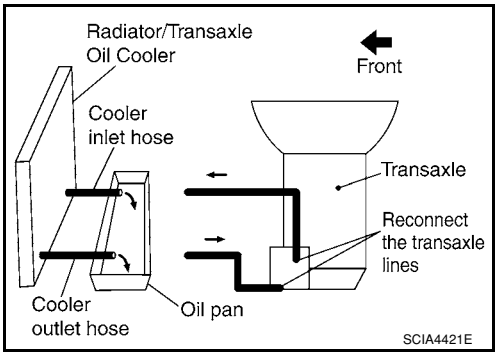

4. Hold the hose and can as high as possible and spray Transmission Cooler Cleaner in a continuous stream into the cooler outlet hose until CVT fluid flows out of the cooler inlet hose for 5 seconds.
5. Tie a common white, basket-type coffee filter to the end of the cooler inlet hose.

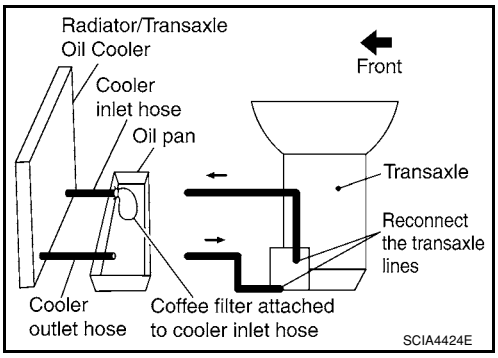

6. Insert the tip of an air gun into the end of the cooler outlet hose.
7. Wrap a shop rag around the air gun tip and end of cooler outlet hose.
8. Blow compressed air regulated to 5 to 9 kg/cm^2 (70 to 130 psi) through the cooler outlet hose to force any remaining CVT fluid into the coffee filter.
9. Remove the coffee filter from the end of the cooler inlet hose.
10. Perform "CVT FLUID COOLER INSPECTION PROCEDURE".

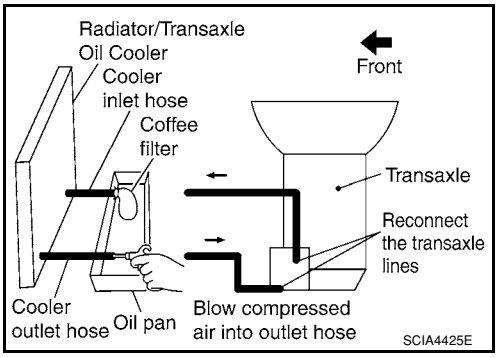

CVT FLUID COOLER INSPECTION PROCEDURE

1. Inspect the coffee filter for debris.

a. If small metal debris less than 1 mm (0.040 in) in size or metal powder is found in the coffee filter, this is normal. If normal debris is found, the CVT fluid cooler/radiator can be re-used and the procedure is ended.

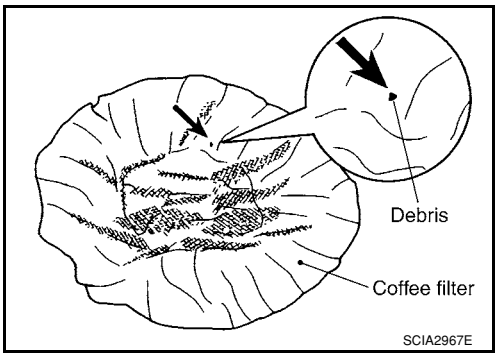

b. If one or more pieces of debris are found that are over 1 mm (0.040 in) in size and/or peeled clutch facing material is found in the coffee filter, the fluid cooler is not serviceable. The radiator/ fluid cooler must be replaced and the inspection procedure is ended.

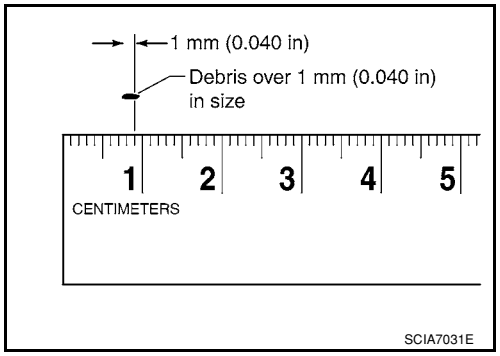

CVT FLUID COOLER FINAL INSPECTION

After performing all procedures, ensure that all remaining oil is cleaned from all components.

CVT SYSTEM

Cross-Sectional View - RE0F08A

INFOID:0000000001703436

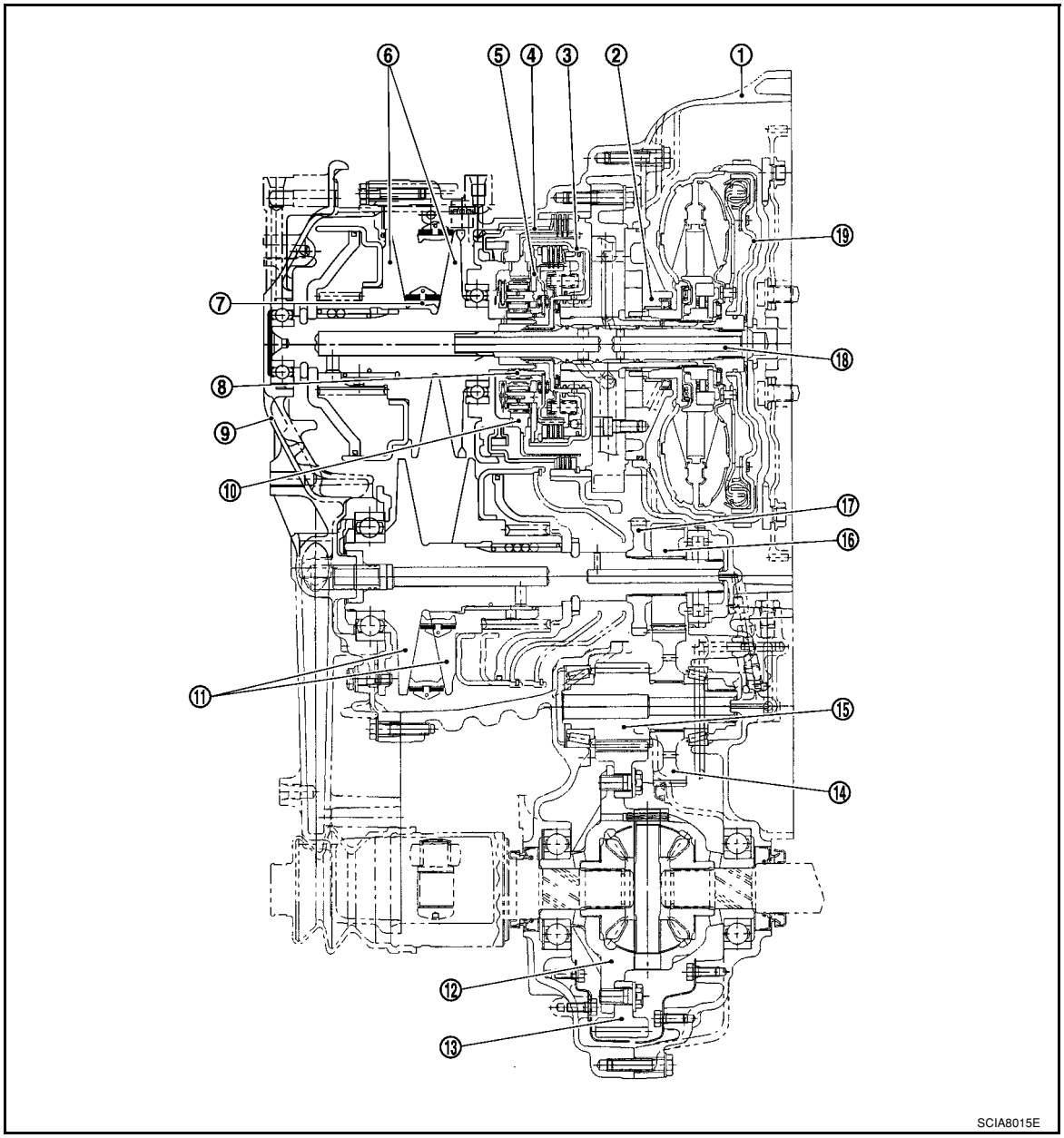

1. Converter housing
2. Oil pump
3. Forward clutch
4. Reverse brake
5. Planetary carrier
6. Primary pulley
7. Steel belt
8. Sun gear
9. Side cover
10. Internal gear
11. Secondary pulley
12. Differential case
13. Final gear
14. Idler gear
15. Reduction gear
16. Output gear
17. Parking gear
18. Input shaft
19. Torque converter

Control System

INFOID:0000000001703437

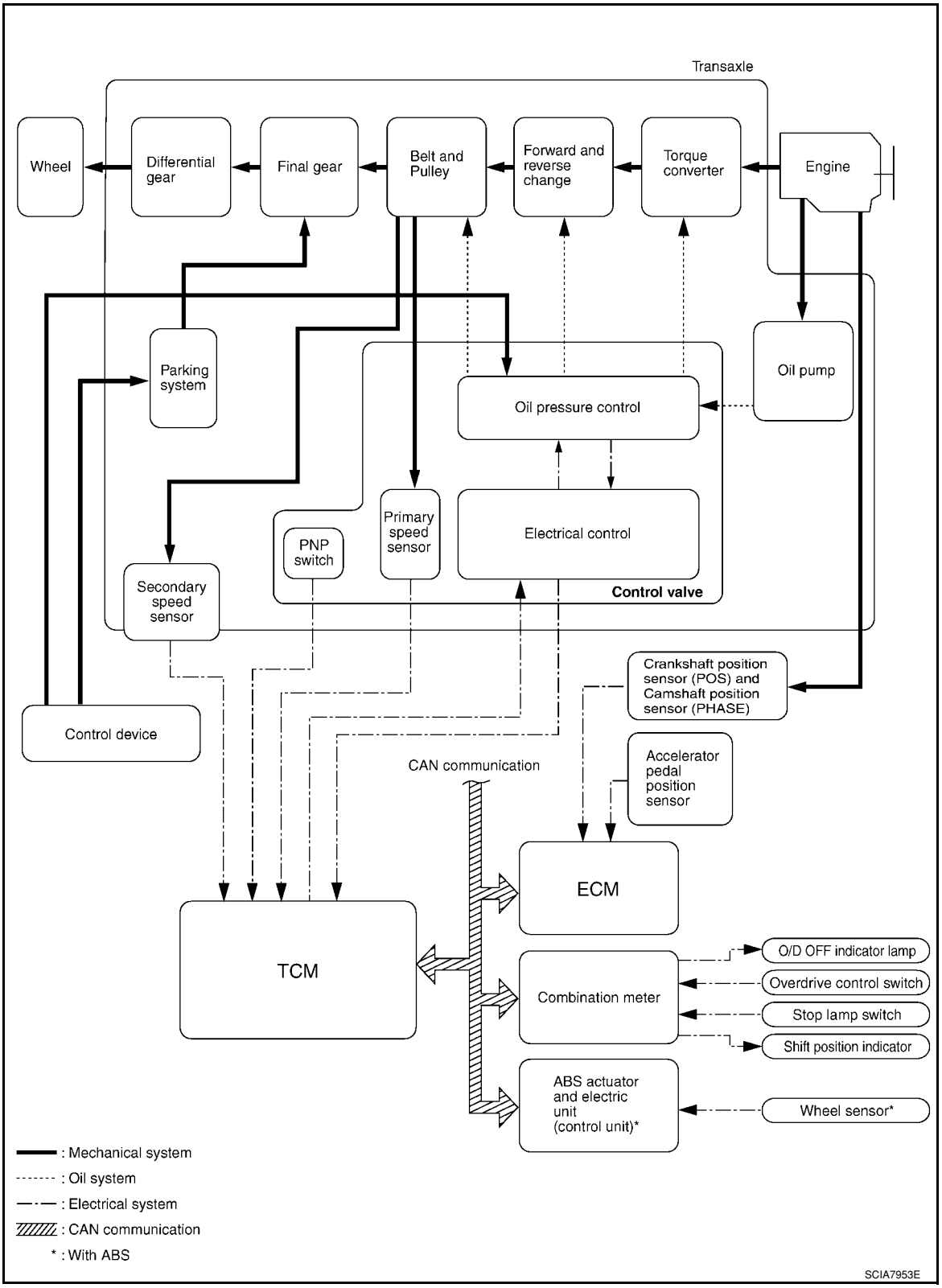

Hydraulic Control System

INFOID:0000000001703438

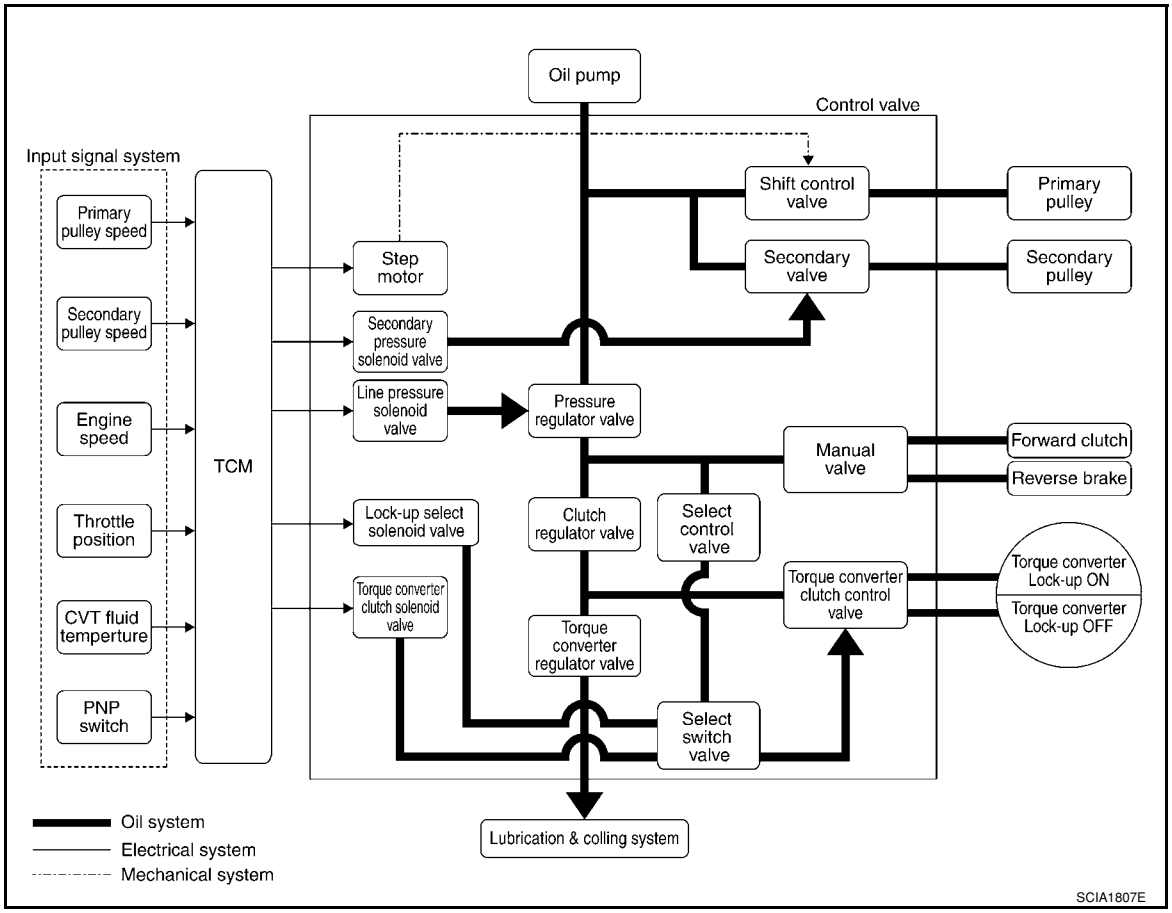

TCM Function

INFOID:0000000001703439

The function of the TCM is to:
- Receive input signals sent from various switches and sensors.
- Determine required line pressure, shifting point, and lock-up operation.
- Send required output signals to the step motor and the respective solenoids.

CONTROL SYSTEM OUTLINE

The CVT senses vehicle operating conditions through various sensors. It always controls the optimum shift position and reduces shifting and lock-up shocks.

SENSORS (or SIGNAL)		TCM		ACTUATORS
PNP switch Accelerator pedal position signal Closed throttle position signal Engine speed signal CVT fluid temperature sensor Vehicle speed signal Overdrive control signal Stop lamp switch signal Primary speed sensor Secondary speed sensor Primary pressure sensor Secondary pressure sensor	⇒	Shift control Line pressure control Primary pressure control Secondary pressure control Lock-up control Engine brake control Vehicle speed control Fail-safe control Self-diagnosis CONSULT-III communication line Duet-EA control CAN system On board diagnosis	⇒	Step motor Torque converter clutch solenoid valve Lock-up select solenoid valve Line pressure solenoid valve Secondary pressure solenoid valve Shift position indicator O/D OFF indicator lamp Starter relay

CONTROL SYSTEM DIAGRAM

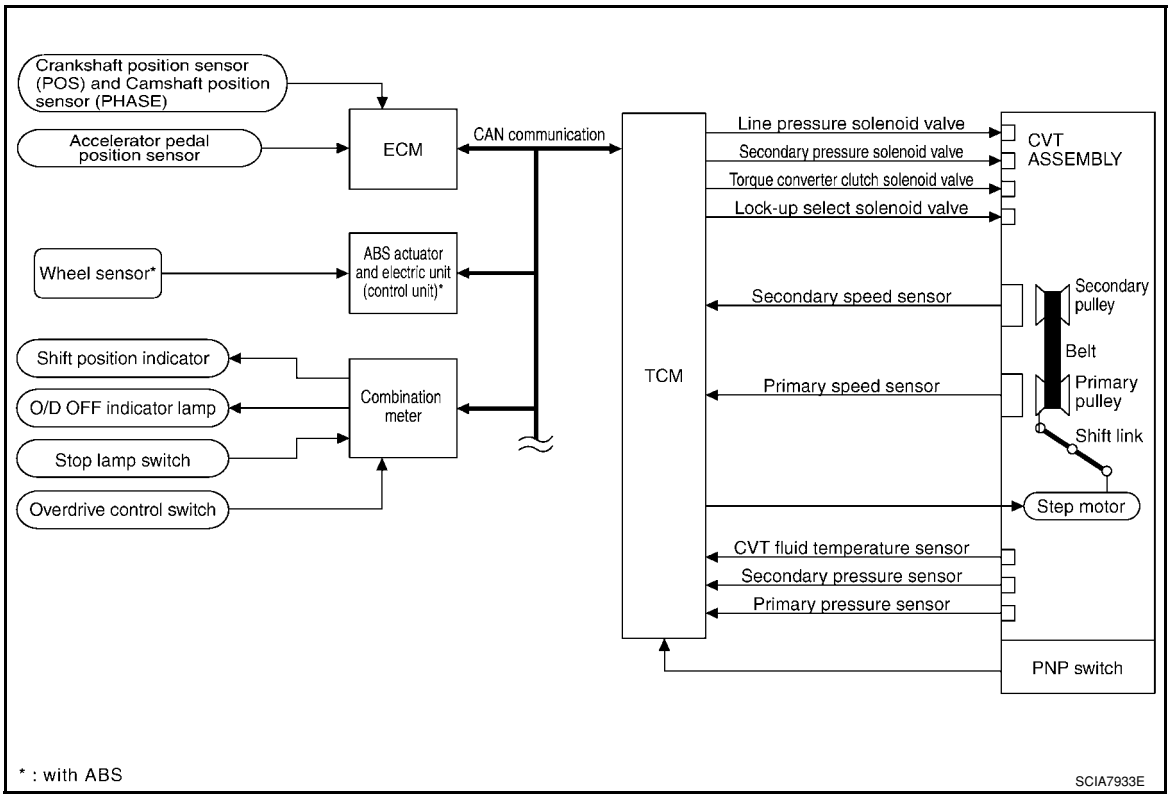

CAN Communication

INFOID:0000000001703440

SYSTEM DESCRIPTION

CAN (Controller Area Network) is a serial communication line for real time application. It is an on-vehicle multiplex communication line with high data communication speed and excellent error detection ability. Many electronic control units are equipped onto a vehicle, and each control unit shares information and links with other control units during operation (not independent). In CAN communication, control units are connected with 2 communication lines (CAN-H line, CAN-L line) allowing a high rate of information transmission with less wiring. Each control unit transmits/receives data but selectively reads required data only. For details, refer to LAN-6, "System Description".

Input/Output Signal of TCM

INFOID:0000000001703441

Control item		Fluid pressure control	Select control	Shift control	Lock-up control	CAN communication control	Fail-safe function (*3)
Input	PNP switch	X	X	X	X	X	X
	Accelerator pedal position signal (*1)	X	X	X	X	X	X
	Closed throttle position signal(*1)	X		X	X	X	
	Engine speed signal(*1)	X	X		X	X	X
	CVT fluid temperature sensor	X	X	X	X		X
	Stop lamp switch signal(*1)	X		X	X	X	
	Overdrive control signal(*1)			X		X	
	Primary speed sensor	X		X	X	X	X
	Secondary speed sensor	X	X	X	X	X	X
	Primary pressure sensor	X		X			
	Secondary pressure sensor	X		X			X
	TCM power supply voltage signal	X	X	X	X	X	X
Output	Step motor			X			X
	TCC solenoid valve		X		X		X
	Lock-up select solenoid valve		X		X		X
	Line pressure solenoid valve	X	X	X			X
	Secondary pressure solenoid valve	X		X			X
	O/D OFF indicator signal(*2)			X		X	

*1: Input by CAN communications.

*2: Output by CAN communications.

*3: If these input and output signals are different, the TCM triggers the fail-safe function.

Line Pressure and Secondary Pressure Control

INFOID:0000000001703442

- When an input torque signal equivalent to the engine drive force is sent from the ECM to the TCM, the TCM controls the line pressure solenoid valve and secondary pressure solenoid valve.
- This line pressure solenoid controls the pressure regulator valve as the signal pressure and adjusts the pressure of the operating oil discharged from the oil pump to the line pressure most appropriate to the driving state. Secondary pressure is controlled by decreasing line pressure.

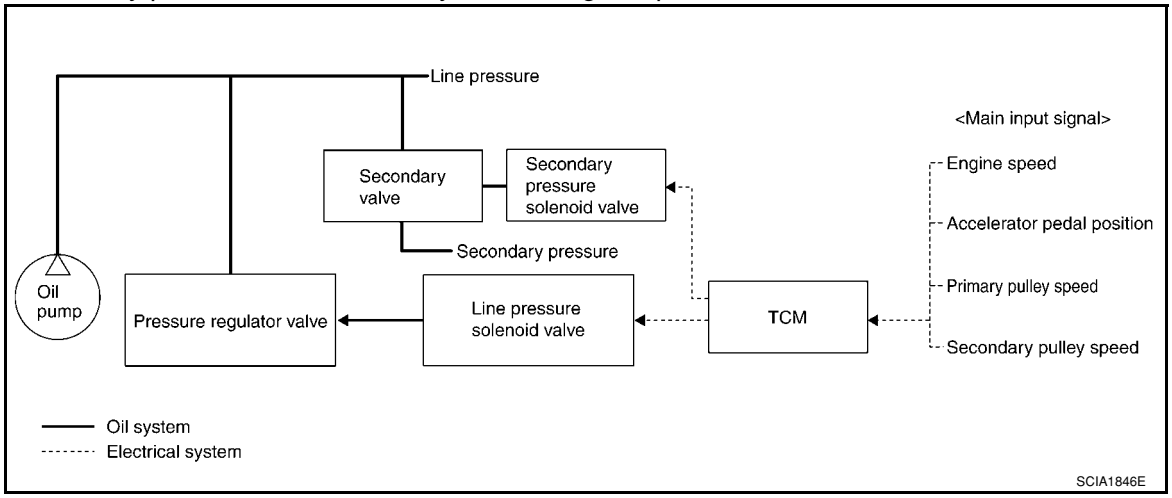

NORMAL CONTROL

Optimize the line pressure and secondary pressure, depending on driving conditions, on the basis of the throttle position, the engine speed, the primary pulley (input) revolution speed, the secondary pulley (output) revolution speed, the brake signal, the PNP switch signal, the lock-up signal, the voltage, the target gear ratio, the fluid temperature, and the fluid pressure.

FEEDBACK CONTROL

When controlling the normal fluid pressure or the selected fluid pressure, the secondary pressure can be set more accurately by using the fluid pressure sensor to detect the secondary pressure and controlling the feedback.

Shift Control

INFOID:0000000001703443

In order to select the gear ratio which can obtain the driving force in accordance with driver's intention and the vehicle condition, TCM monitors the driving conditions, such as the vehicle speed and the throttle position and selects the optimum gear ratio, and determines the gear change steps to the gear ratio. Then send the command to the step motor, and control the flow-in/flow-out of line pressure from the primary pulley to determine the position of the moving-pulley and control the gear ratio.

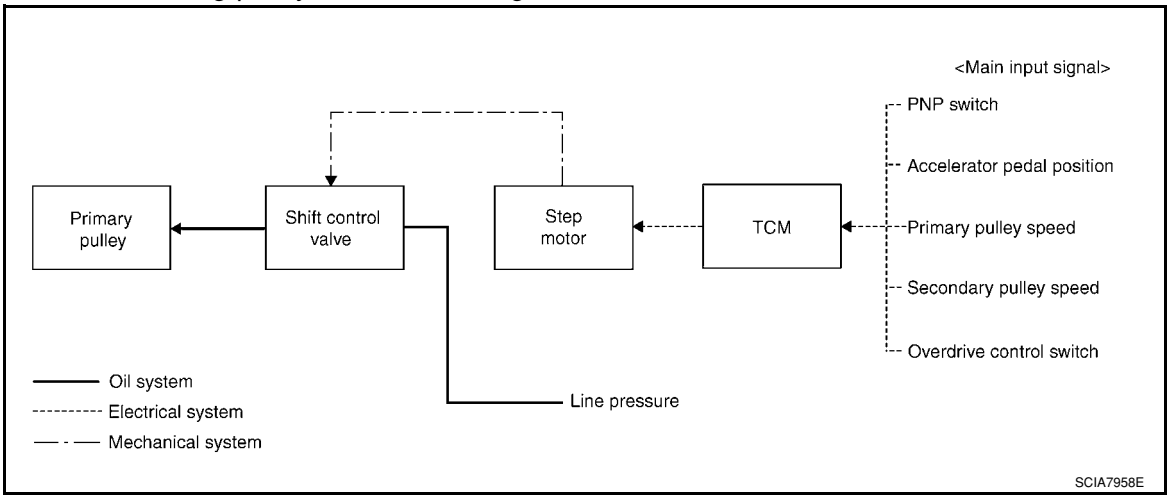

NOTE:
The gear ratio is set for every position separately.

“D” POSITION

Shifting over all the ranges of gear ratios from the lowest to the highest.

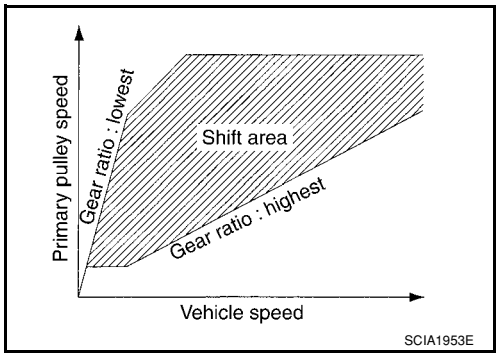

OVERDRIVE-OFF MODE

Use this position for the improved engine braking.

“L” POSITION

By limiting the gear range to the lowest position, the strong driving force and the engine brake can be secured.

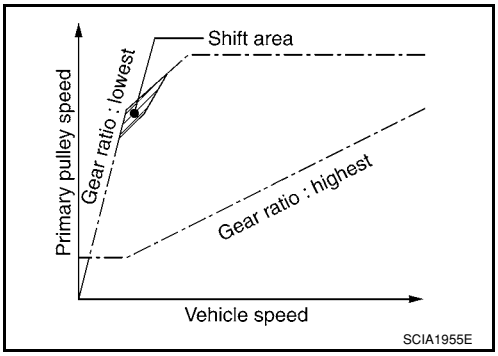

DOWNHILL ENGINE BRAKE CONTROL (AUTO ENGINE BRAKE CONTROL)

When downhill is detected with the accelerator pedal released, the engine brake will be strengthened up by downshifting so as not to accelerate the vehicle more than necessary.

ACCELERATION CONTROL

According to vehicle speed and a change of accelerator pedal angle, driver's request for acceleration and driving scene are judged. This function assists improvement in acceleration feeling by making the engine speed proportionate to the vehicle speed. And a shift map which can gain a larger driving force is available for compatibility of mileage with driveability.

Lock-up and Select Control

INFOID:0000000001703444

- The torque converter clutch piston in the torque converter is engaged to eliminate torque converter slip to increase power transmission efficiency.
- The torque converter clutch control valve operation is controlled by the torque converter clutch solenoid valve, which is controlled by a signal from TCM. The torque converter clutch control valve engages or releases the torque converter clutch piston.
- When shifting between “N” (“P”) ⇔ “D” (“R”), torque converter clutch solenoid controls engagement power of forward clutch and reverse brake.
- The lock-up applied gear range was expanded by locking up the torque converter at a lower vehicle speed than conventional CVT models.

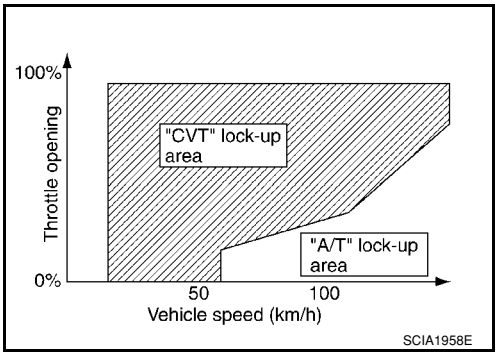

TORQUE CONVERTER CLUTCH AND SELECT CONTROL VALVE CONTROL

Lock-up and Select Control System Diagram

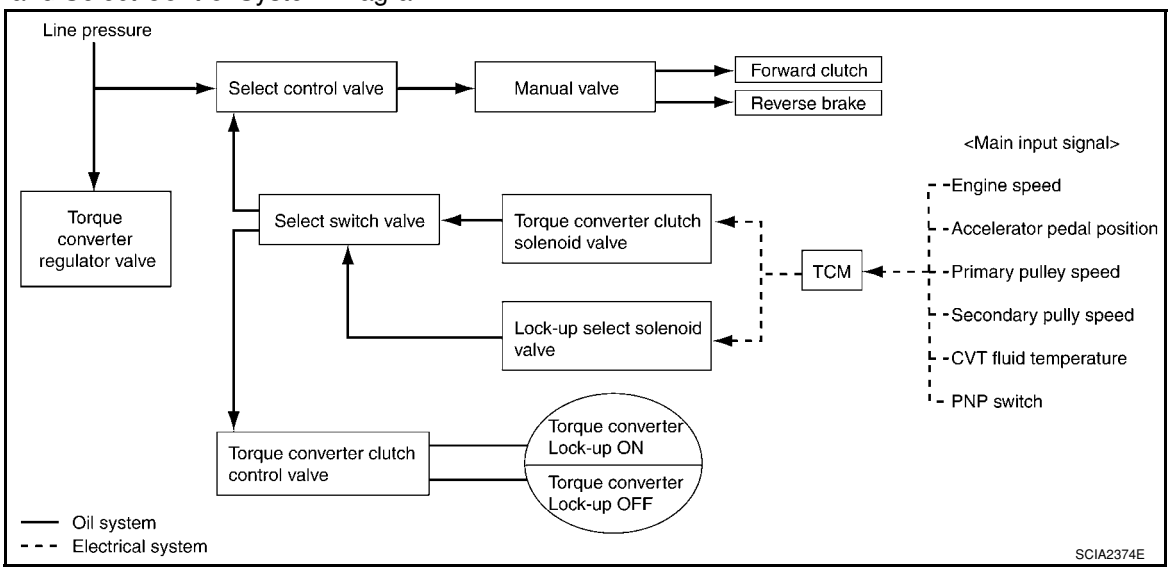

Lock-up Released

In the lock-up released state, the torque converter clutch control valve is set into the unlocked state by the torque converter clutch solenoid and the lock-up apply pressure is drained.
In this way, the torque converter clutch piston is not coupled.

Lock-up Applied

In the lock-up applied state, the torque converter clutch control valve is set into the locked state by the torque converter clutch solenoid and lock-up apply pressure is generated.
In this way, the torque converter clutch piston is pressed and coupled.

Select Control

When shifting between “N” (“P”)⇔“D” (“R”), optimize the operating pressure on the basis of the throttle position, the engine speed, and the secondary pulley (output) revolution speed to lessen the shift shock.

Control Valve

INFOID:0000000001703445

FUNCTION OF CONTROL VALVE

Name	Function
Torque converter regulator valve	Optimizes the supply pressure for the torque converter depending on driving conditions.
Pressure regulator valve	Optimizes the discharge pressure from the oil pump depending on driving conditions.
TCC control valve	• Activates or deactivate the lock-up. • Lock-up smoothly by opening lock-up operation excessively.
TCC solenoid valve	Controls the TCC control valve or select control valve.
Shift control valve	Controls flow-in/out of line pressure from the primary pulley depending on the stroke difference between the stepping motor and the primary pulley.
Secondary valve	Controls the line pressure from the secondary pulley depending on operating conditions.
Clutch regulator valve	Adjusts the clutch operating pressure depending on operating conditions.
Secondary pressure solenoid valve	Controls the secondary valve.
Line pressure solenoid valve	Controls the line pressure control valve.
Step motor	Controls the pulley ratio.
Manual valve	Transmits the clutch operating pressure to each circuit in accordance with the selected position.
Select control valve	Engages forward clutch, reverse brake smoothly depending on select operation.
Select switch valve	Switches torque converter clutch solenoid valve control pressure use to torque converter clutch control valve or select control valve.
Lock-up select solenoid valve	Controls the select switch valve.

ON BOARD DIAGNOSTIC (OBD) SYSTEM

Introduction

INFOID:0000000001703446

The CVT system has two self-diagnostic systems.
The first is the emission-related on board diagnostic system (OBD-II) performed by the TCM in combination with the ECM. The malfunction is indicated by the MIL (malfunction indicator lamp) and is stored as a DTC in the ECM memory, and the TCM memory.
The second is the TCM original self-diagnosis performed by the TCM. The malfunction is stored in the TCM memory. The detected items are overlapped with OBD-II self-diagnostic items. For detail, refer to CVT-47, "CONSULT-III Function (TRANSMISSION)".

OBD-II Function for CVT System

INFOID:0000000001703447

The ECM provides emission-related on board diagnostic (OBD-II) functions for the CVT system. One function is to receive a signal from the TCM used with OBD-related parts of the CVT system. The signal is sent to the ECM when a malfunction occurs in the corresponding OBD-related part. The other function is to indicate a diagnostic result by means of the MIL (malfunction indicator lamp) on the instrument panel. Sensors, switches and solenoid valves are used as sensing elements.
The MIL automatically illuminates in One or Two Trip Detection Logic when a malfunction is sensed in relation to CVT system parts.

One or Two Trip Detection Logic of OBD-II

INFOID:0000000001703448

ONE TRIP DETECTION LOGIC

If a malfunction is sensed during the first test drive, the MIL will illuminate and the malfunction will be stored in the ECM memory as a DTC. The TCM is not provided with such a memory function.

TWO TRIP DETECTION LOGIC

When a malfunction is sensed during the first test drive, it is stored in the ECM memory as a 1st trip DTC (diagnostic trouble code) or 1st trip freeze frame data. At this point, the MIL will not illuminate. — 1st trip
If the same malfunction as that experienced during the first test drive is sensed during the second test drive, the MIL will illuminate. — 2nd trip
The “trip” in the “One or Two Trip Detection Logic” means a driving mode in which self-diagnosis is performed during vehicle operation.

OBD-II Diagnostic Trouble Code (DTC)

INFOID:0000000001703449

HOW TO READ DTC AND 1ST TRIP DTC

DTC and 1st trip DTC can be read by the following methods.
(with CONSULT-III or GST) CONSULT-III or GST (Generic Scan Tool) Examples: P0705, P0720 etc.
These DTC are prescribed by SAE J2012.
(CONSULT-III also displays the malfunctioning component or system.)

- **1st trip DTC No. is the same as DTC No.**
- **Output of the diagnostic trouble code indicates that the indicated circuit has a malfunction. However, in case of the Mode II and GST, they do not indicate whether the malfunction is still occurring or occurred in the past and returned to normal.**
  CONSULT-III can identify them as shown below, therefore, CONSULT-III (if available) is recommended.

DTC or 1st trip DTC of a malfunction is displayed in SELF-DIAGNOSTIC RESULTS mode for “ENGINE” with CONSULT-III. Time data indicates how many times the vehicle was driven after the last detection of a DTC.

If the DTC is being detected currently, the time data will be “0”.

If a 1st trip DTC is stored in the ECM, the time data will be “1t”.

Freeze Frame Data and 1st Trip Freeze Frame Data

The ECM has a memory function, which stores the driving condition such as fuel system status, calculated load value, engine coolant temperature, short term fuel trim, long term fuel trim, engine speed and vehicle speed at the moment the ECM detects a malfunction.
Data which are stored in the ECM memory, along with the 1st trip DTC, are called 1st trip freeze frame data, and the data, stored together with the DTC data, are called freeze frame data and displayed on CONSULT-III or GST. The 1st trip freeze frame data can only be displayed on the CONSULT-III screen, not on the GST. For details, refer to EC-109, "CONSULT-II Function (ENGINE)".
Only one set of freeze frame data (either 1st trip freeze frame data or freeze frame data) can be stored in the ECM. 1st trip freeze frame data is stored in the ECM memory along with the 1st trip DTC. There is no priority for 1st trip freeze frame data, and it is updated each time a different 1st trip DTC is detected. However, once freeze frame data (2nd trip detection/MIL on) is stored in the ECM memory, 1st trip freeze frame data is no longer stored. Remember, only one set of freeze frame data can be stored in the ECM. The ECM has the following priorities to update the data.

Priority	Items	
1	Freeze frame data	Misfire — DTC: P0300 - P0306 Fuel Injection System Function — DTC: P0171, P0172, P0174, P0175
2		Except the above items (Includes CVT related items)
3	1st trip freeze frame data	

Both 1st trip freeze frame data and freeze frame data (along with the DTC) are cleared when the ECM memory is erased.

HOW TO ERASE DTC

The diagnostic trouble code can be erased by CONSULT-III, GST or ECM DIAGNOSTIC TEST MODE as described following.

- **If the battery cable is disconnected, the diagnostic trouble code will be lost within 24 hours.**
- **When you erase the DTC, using CONSULT-III or GST is easier and quicker than switching the mode selector on the ECM.**

The following emission-related diagnostic information is cleared from the ECM memory when erasing DTC related to OBD-II. For details, refer to EC-47, "Emission-related Diagnostic Information".

- **Diagnostic trouble codes (DTC)**
- **1st trip diagnostic trouble codes (1st trip DTC)**
- **Freeze frame data**
- **1st trip freeze frame data**
- **System readiness test (SRT) codes**
- **Test values**

HOW TO ERASE DTC (WITH CONSULT-III)

- **If a DTC is displayed for both ECM and TCM, it is necessary to be erased for both ECM and TCM.**

1. If the ignition switch stays ON after repair work, be sure to turn ignition switch OFF once. Wait at least 10 seconds and then turn it ON (engine stopped) again.
2. Turn CONSULT-III ON and touch “TRANSMISSION”.
3. Touch “SELF-DIAG RESULTS”.
4. Touch “ERASE”. (The DTC in the TCM will be erased.) Then touch “BACK” twice.
5. Touch “ENGINE”.
6. Touch “SELF-DIAG RESULTS”.
7. Touch “ERASE”. (The DTC in the ECM will be erased.)

HOW TO ERASE DTC (WITH GST)

1. If the ignition switch stays ON after repair work, be sure to turn ignition switch OFF once. Wait at least 10 seconds and then turn it ON (engine stopped) again.
2. Select Mode 4 with GST (Generic Scan Tool). For details, refer to EC-119, "Generic Scan Tool (GST) Function".

Malfunction Indicator Lamp (MIL)

INFOID:0000000001703450

DESCRIPTION

The MIL is located on the instrument panel.

1. The MIL will light up when the ignition switch is turned ON without the engine running. This is a bulb check.
   - If the MIL does not light up, refer to DI-21, or see EC-546.
2. When the engine is started, the MIL should go off.
   If the MIL remains on, the on board diagnostic system has detected an engine system malfunction.

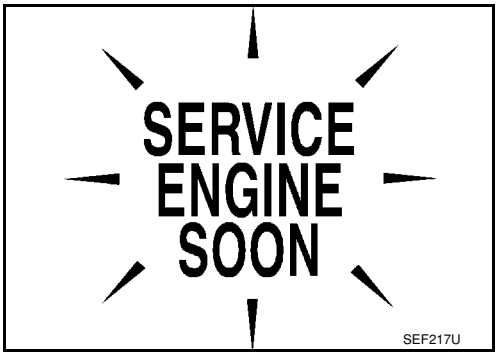

TROUBLE DIAGNOSIS

DTC Inspection Priority Chart

INFOID:0000000001703451

If some DTCs are displayed at the same time, perform inspections one by one based on the following priority chart.

NOTE:
If DTC "U1000 CAN COMM CIRCUIT" is displayed with other DTCs, first perform the trouble diagnosis for "DTC U1000 CAN COMMUNICATION LINE". Refer to CVT-56 .

Priority	Detected items (DTC)
1	U1000 CAN communication line
2	Except above

Fail-Safe

INFOID:0000000001703452

The TCM has an electrical fail-safe mode. This mode makes it possible to operate even if there is an error in a main electronic control input/output signal circuit.

FAIL-SAFE FUNCTION

If any malfunction occurs in a sensor or solenoid, this function controls the CVT to make driving possible.

Output Speed Sensor (Secondary Speed Sensor)
The shift pattern is changed in accordance with throttle position when an unexpected signal is sent from the output speed sensor (secondary speed sensor) to the TCM. The overdrive-off mode is inhibited, and the transaxle is put in "D".

Input Speed Sensor (Primary Speed Sensor)
The shift pattern is changed in accordance with throttle position and secondary speed (vehicle speed) when an unexpected signal is sent from the input speed sensor (primary speed sensor) to the TCM. The sport mode is inhibited, and the transaxle is put in "D".

PNP Switch
If an unexpected signal is sent from the PNP switch to the TCM, the transaxle is put in "D".

CVT Fluid Temperature Sensor
If an unexpected signal is sent from the CVT fluid temperature sensor to the TCM, the gear ratio in use before receiving the unexpected signal is maintained or the gear ratio is controlled to keep engine speed under 3500 rpm.

Transmission Fluid Pressure Sensor A (Secondary Pressure Sensor)
- If an unexpected signal is sent from the transmission fluid pressure sensor A (secondary pressure sensor) to the TCM, the secondary pressure feedback control is stopped and the offset value obtained before the non-standard condition occurs is used to control line pressure.
- If transmission fluid pressure sensor A (secondary pressure sensor) error signal is input to TCM, secondary pressure feedback control stops, but line pressure is controlled normally.

Pressure Control Solenoid A (Line Pressure Solenoid)
If an unexpected signal is sent from the solenoid to the TCM, the pressure control solenoid A (line pressure solenoid) is turned OFF to achieve the maximum fluid pressure.

Pressure Control Solenoid B (Secondary Pressure Solenoid)
If an unexpected signal is sent from the solenoid to the TCM, the pressure control solenoid B (secondary pressure solenoid) is turned OFF to achieve the maximum fluid pressure.

Torque Converter Clutch Solenoid
If an unexpected signal is sent from the solenoid to the TCM, the torque converter clutch solenoid is turned OFF to cancel the lock-up.

Step Motor
If an unexpected signal is sent from the step motor to the TCM, the step motor coil phases "A" through "D" are all turned OFF to hold the gear ratio used right before the non-standard condition occurred.

CVT Lock-up Select Solenoid

If an unexpected signal is sent from the solenoid to the TCM, the CVT lock-up select solenoid is turned OFF to cancel the lock-up.

TCM Power Supply (Memory Back-up)
Transaxle assembly is protected by limiting the engine torque when the memory back-up power supply (for controlling) from the battery is not supplied to TCM. Normal statues is restored when turning the ignition switch OFF to ON after the normal power supply.

How to Perform Trouble Diagnosis for Quick and Accurate Repair

INFOID:0000000001703453

INTRODUCTION

The TCM receives a signal from the vehicle speed sensor, PNP switch and provides shift control or lock-up control via CVT solenoid valves.
The TCM also communicates with the ECM by means of a signal sent from sensing elements used with the OBD-related parts of the CVT system for malfunction-diagnostic purposes. The TCM is capable of diagnosing malfunctioning parts while the ECM can store malfunctions in its memory.
Input and output signals must always be correct and stable in the operation of the CVT system. The CVT system must be in good operating condition and be free of valve seizure, solenoid valve malfunction, etc.

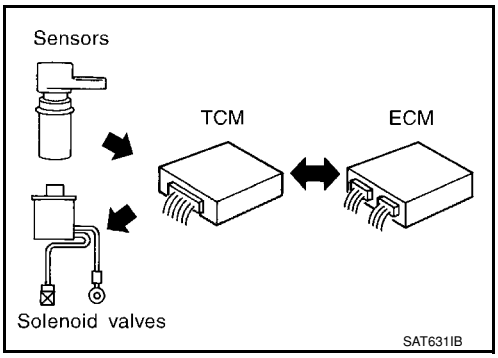

It is much more difficult to diagnose an error that occurs intermittently rather than continuously. Most intermittent errors are caused by poor electric connections or improper wiring. In this case, careful checking of suspected circuits may help prevent the replacement of good parts.
A visual check only may not find the cause of the errors. A road test with CONSULT-III (or GST) or a circuit tester connected should be performed. Follow the "WORK FLOW" .

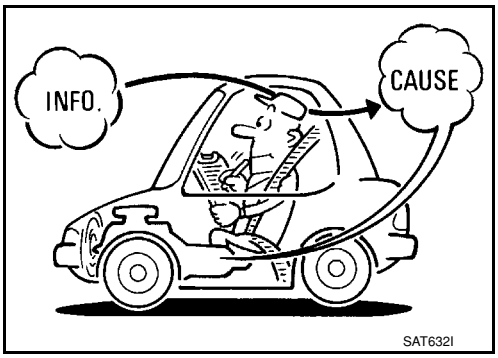

Before undertaking actual checks, take a few minutes to talk with a customer who approaches with a driveability complaint. The customer can supply good information about such errors, especially intermittent ones. Find out what symptoms are present and under what conditions they occur. A “DIAGNOSTIC WORKSHEET” as shown on the example (Refer to "Diagnostic Worksheet Chart") should be used.
Start your diagnosis by looking for “conventional” errors first. This will help troubleshoot driveability errors on an electronically controlled engine vehicle.
Also check related Service bulletins.

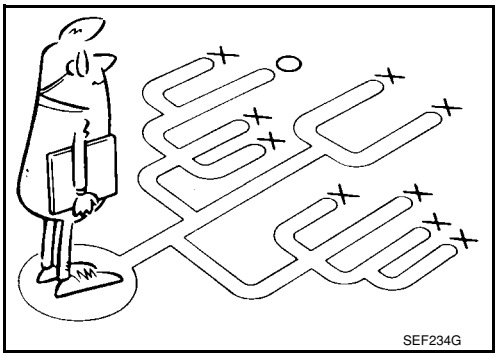

WORK FLOW

A good understanding of the malfunction conditions can make troubleshooting faster and more accurate.
In general, each customer feels differently about a malfunction. It is important to fully understand the symptoms or conditions for a customer complaint.
Make good use of the two sheets provided, "Information From Customer" and "Diagnostic Worksheet Chart" , to perform the best troubleshooting possible.

Work Flow Chart

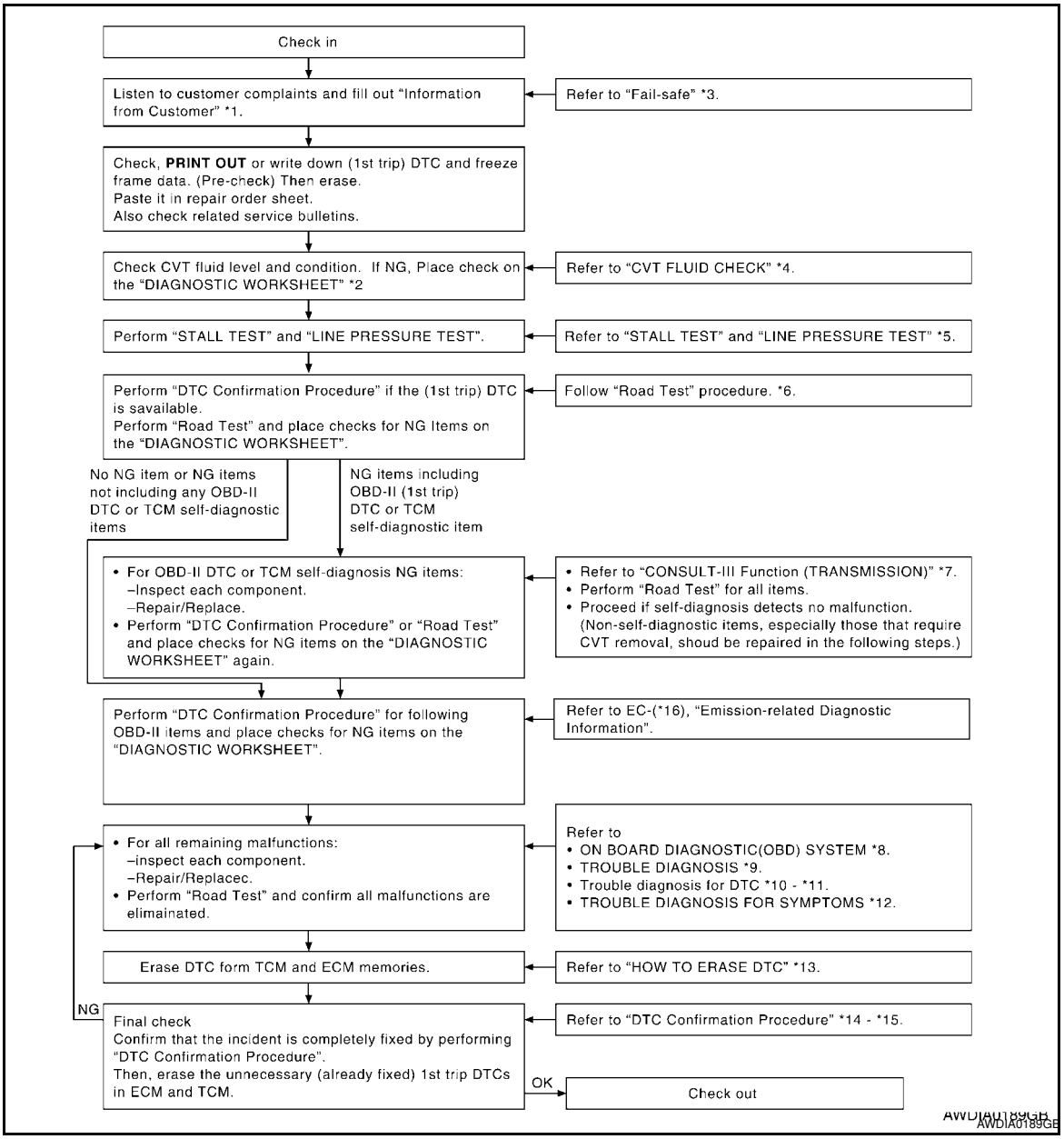

*1. "Information From Customer"	*2. "DIAGNOSTIC WORKSHEET"	*3. CVT-29
*4. CVT-36	*5. CVT-36, CVT-36	*6. CVT-40
*7. CVT-47	*8. CVT-26	*9. CVT-29
*10. CVT-56	*11. CVT-141	*12. CVT-149
*13. CVT-26	*14. CVT-56	*15. CVT-141
*16. EC-47		

DIAGNOSTIC WORKSHEET

Information From Customer

KEY POINTS
- **WHAT**..... Vehicle & CVT model
- **WHEN**..... Date, Frequencies
- **WHERE**..... Road conditions
- **HOW**..... Operating conditions, Symptoms

Customer name MR/MS	Model & Year	VIN
Trans. Model	Engine	Mileage
malfunction Date	Manuf. Date	In Service Date
Frequency	❑ Continuous ❑ Intermittent (times a day)	
Symptoms	❑ Vehicle does not move. (❑ Any position ❑ Particular position)	
	❑ No shift	
	❑ Lock-up malfunction	
	❑ Shift shock or slip (❑ N → D ❑ N → R ❑ Lock-up ❑ Any drive position)	
	❑ Noise or vibration	
	❑ No pattern select	
	❑ Others ( )	
Malfunction indicator lamp (MIL)	❑ Continuously lit	❑ Not lit

Diagnostic Worksheet Chart

1	❑ Read the item on cautions concerning fail-safe and understand the customer's complaint.			CVT-29
2	❑ CVT fluid inspection			CVT-36
		❑ Leak (Repair leak location.) ❑ State ❑ Amount		
3	❑ Stall test and line pressure test			CVT-36, CVT-36
		❑ Stall test		
			❑ Torque converter one-way clutch ❑ Reverse brake ❑ Forward clutch ❑ Steel belt	❑ Engine ❑ Line pressure low ❑ Primary pulley ❑ Secondary pulley
		❑ Line pressure inspection - Suspected part:		

4	❏ Perform road test.			CVT-40
	4-1.	Check before engine is started		CVT-41
		❏CVT-151, "O/D OFF Indicator Lamp Does Not Come On" ❏ Perform self-diagnosis. Enter checks for detected items. CVT-47		
			❏CVT-56 ❏CVT-60 ❏CVT-63 ❏CVT-65 ❏CVT-71 ❏CVT-76 ❏CVT-80 ❏CVT-85 ❏CVT-87 ❏CVT-88 ❏CVT-93 ❏CVT-95 ❏CVT-100 ❏CVT-102 ❏CVT-104 ❏CVT-109 ❏CVT-113 ❏CVT-115 ❏CVT-119 ❏CVT-121 ❏CVT-125 ❏CVT-127 ❏CVT-129 ❏CVT-131 ❏CVT-132 ❏CVT-137 ❏CVT-141	
	4-2.	Check at idle		CVT-41
		❏CVT-153, "Engine Cannot Be Started in "P" and "N" Position" ❏CVT-153, "In "P" Position, Vehicle Moves Forward or Backward When Pushed" ❏CVT-154, "In "N" Position, Vehicle Moves" ❏CVT-154, "Large Shock "N" → "R" Position" ❏CVT-155, "Vehicle Does Not Creep Backward in "R" Position" ❏CVT-156, "Vehicle Does Not Creep Forward in "D" or "L" Position"		

4	4-3.	Cruise test		CVT-43
		❏CVT-157, "Vehicle Speed Does Not Change in "L" Position" ❏CVT-158, "Vehicle Speed Does Not Change in overdrive-off mode" ❏CVT-159, "Vehicle Speed Does Not Change in "D" Position" ❏CVT-159, "Vehicle Does Not Decelerate by Engine Brake" ❏ perform self-diagnosis. Enter checks for detected items. CVT-47		
			❏CVT-56 ❏CVT-60 ❏CVT-63 ❏CVT-65 ❏CVT-71 ❏CVT-76 ❏CVT-80 ❏CVT-85 ❏CVT-87 ❏CVT-88 ❏CVT-93 ❏CVT-95 ❏CVT-100 ❏CVT-102 ❏CVT-104 ❏CVT-109 ❏CVT-113 ❏CVT-115 ❏CVT-119 ❏CVT-121 ❏CVT-125 ❏CVT-127 ❏CVT-129 ❏CVT-131 ❏CVT-132 ❏CVT-137 ❏CVT-141	
5	❏ Inspect each system for items found to be NG in the self-diagnosis and repair or replace the malfunctioning parts.			
6	❏ Perform all road tests and enter the checks again for the required items.			CVT-40
7	❏ For any remaining NG items, perform the “diagnosis procedure” and repair or replace the malfunctioning parts.			
8	❏ Erase the results of the self-diagnosis from the TCM.			CVT-26, CVT-26

CVT Electrical Parts Location

INFOID:0000000001703454

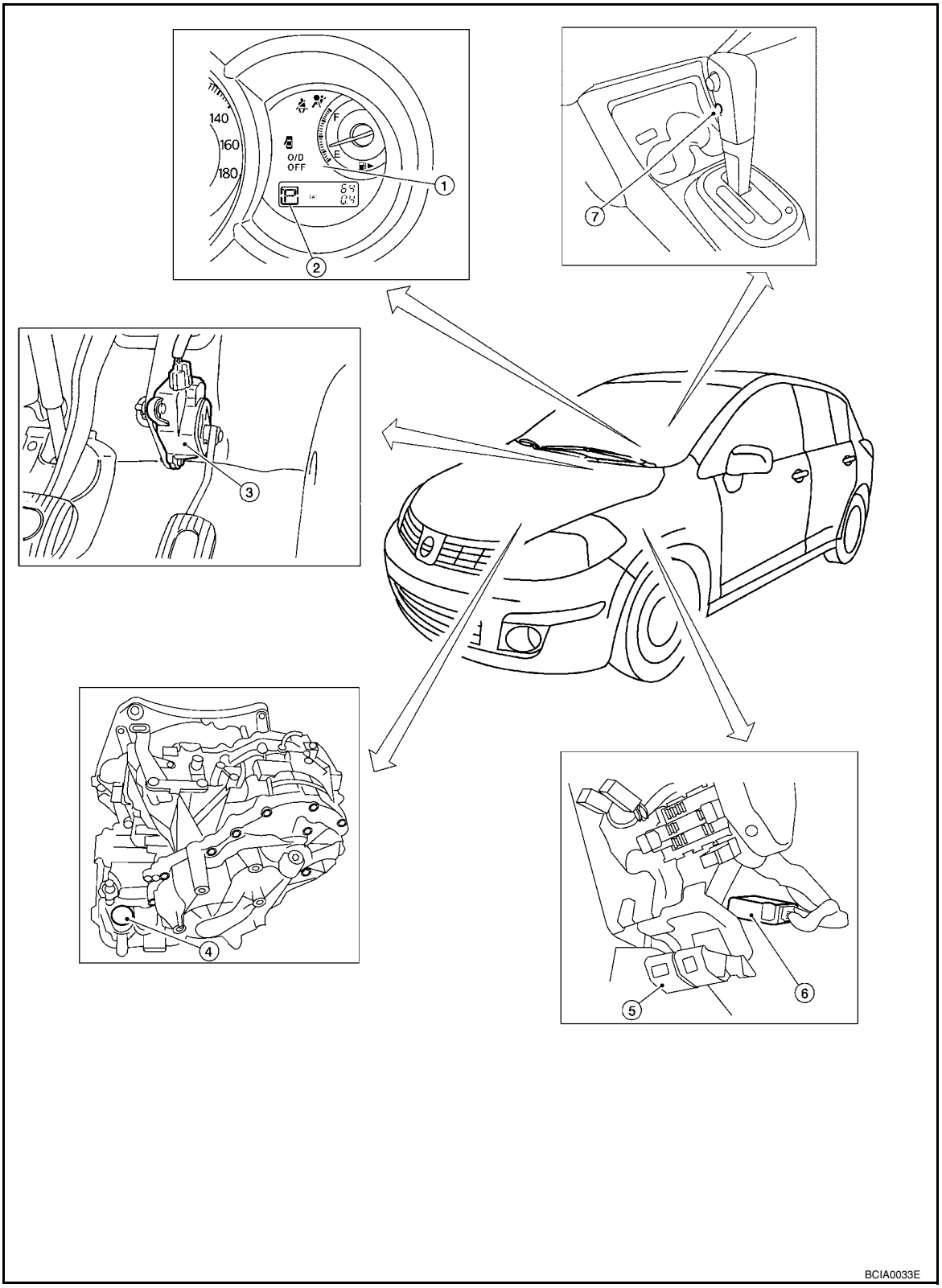

1. O/D OFF indicator lamp
2. Shift position indicator
3. Accelerator pedal position sensor
4. CVT unit harness connector
5. Fuel door release
6. TCM
7. Overdrive control switch

Circuit Diagram

INFOID:0000000001703455

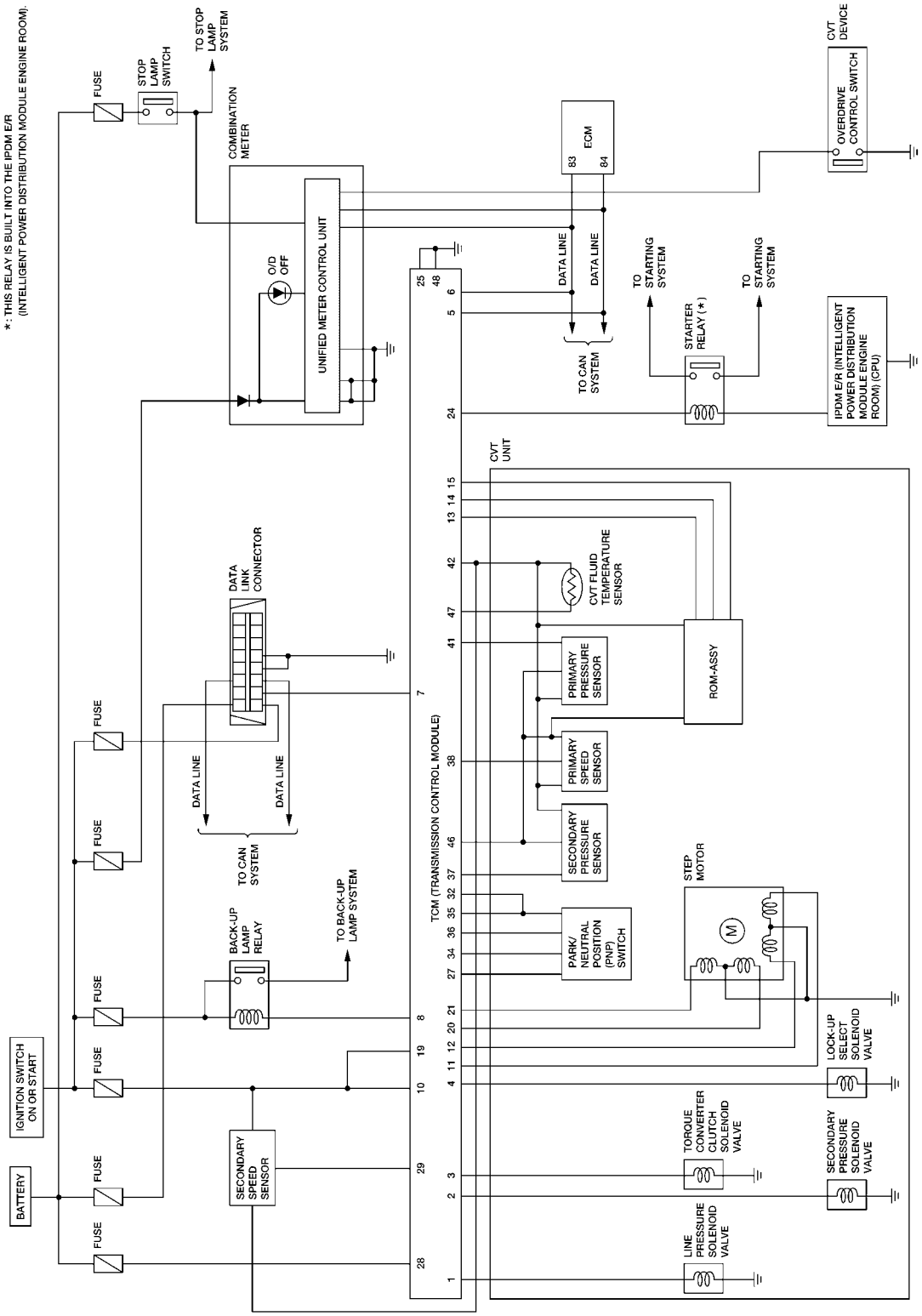

Inspections before Trouble Diagnosis

INFOID:0000000001703456

CVT FLUID CHECK

Fluid Leakage and Fluid Level Check

- Inspect for fluid leakage and check the fluid level. Refer to MA-19, "Checking CVT Fluid" .

Fluid Condition Check

Inspect the fluid condition.

Fluid status	Conceivable cause	Required operation
Varnished (viscous varnish state)	Clutch, brake scorched	Replace the CVT fluid and check the CVT main unit and the vehicle for malfunctions (wire harnesses, cooler pipes, etc.)
Milky white or cloudy	Water in the fluid	Replace the CVT fluid and check for places where water is getting in.
Large amount of metal powder mixed in	Unusual wear of sliding parts within CVT	Replace the CVT fluid and check for improper operation of the CVT.

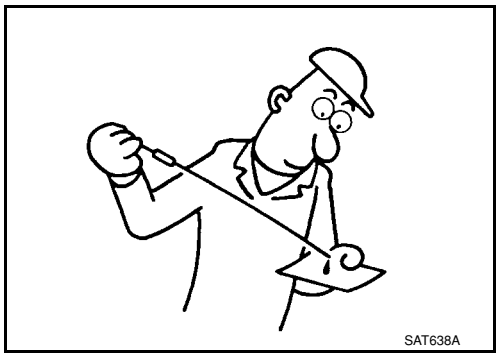
SAT638A

STALL TEST

Stall Test Procedure

1. Inspect the amount of engine oil. Replenish the engine oil if necessary.
2. Drive for about 10 minutes to warm up the vehicle so that the CVT fluid temperature is 50 to 80°C (122 to 176°F). Inspect the amount of CVT fluid. Replenish if necessary.

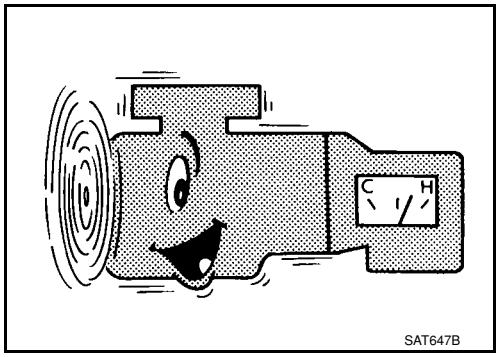

SAT647B

3. Securely engage the parking brake so that the tires do not turn.
4. Install a tachometer where it can be seen by driver during test.
   - **It is good practice to mark the point of specified engine rpm on indicator.**

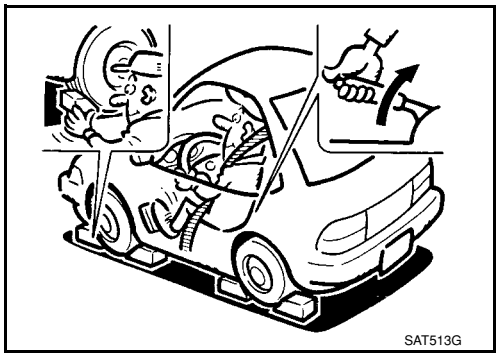
SAT513G

5. Start engine, apply foot brake, and place selector lever in “D” position.

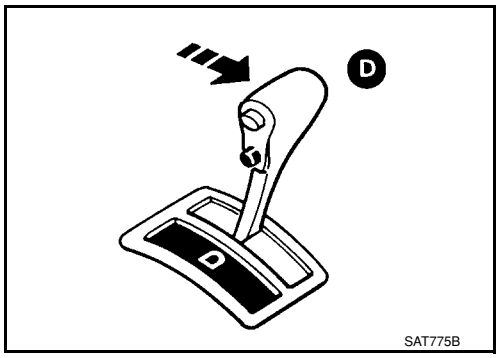

SAT775B

6. While holding down the foot brake, gradually press down the accelerator pedal.
7. Quickly read off the stall speed, and then quickly remove your foot from the accelerator pedal.
   CAUTION:
   Do not hold down the accelerator pedal for more than 5 seconds during this test.

   Stall speed: 2,600 - 3,150 rpm

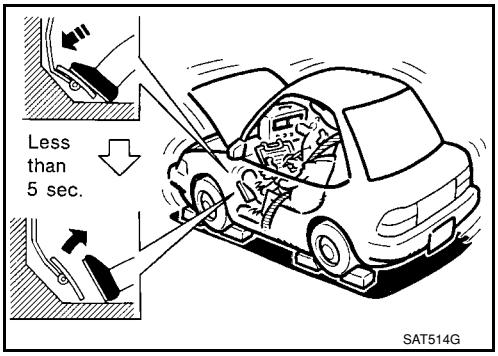

8. Move the selector lever to the “N” position.
9. Cool down the CVT fluid.
   CAUTION:
   Run the engine at idle for at least 1 minute.
10. Repeat steps 6 through 9 with selector lever in “R” position.

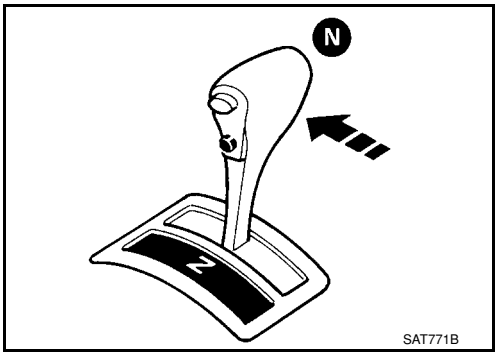

Judgement Stall Test

	Selector lever position		Expected problem location
	“D”	“R”	
Stall rotation	H	O	• Forward clutch
	O	H	• Reverse brake
	L	L	• Engine and torque converter one-way clutch
	H	H	• Line pressure low • Primary pulley • Secondary pulley • Steel belt

O: Stall speed within standard value position.

H: Stall speed is higher than standard value.

L: Stall speed is lower than standard value.

LINE PRESSURE TEST

Line Pressure Test Port

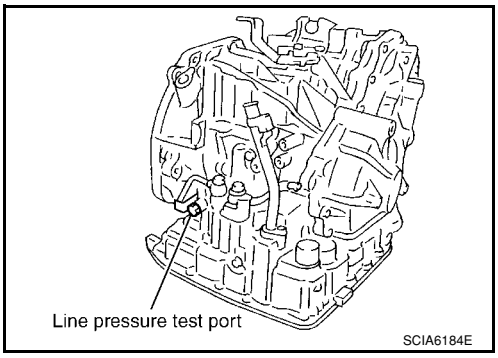

Line Pressure Test Procedure

1. Inspect the amount of engine oil and replenish if necessary.
2. Drive the car for about 10 minutes to warm it up so that the CVT fluid reaches in the range of 50 to 80°C (122 to 176°F), then inspect the amount of CVT fluid and replenish if necessary.
   NOTE:

The CVT fluid temperature rises in the range of 50 - 80°C (122 - 176°F) during 10 minutes of driving.

3. After warming up CVT, remove the oil pressure detection plug and install the oil pressure gauge [special service tool: - (OTC3492)].
   CAUTION:
   When using the oil pressure gauge, be sure to use the O-ring attached to the oil pressure detection plug.

4. Securely engage the parking brake so that the tires do not turn.

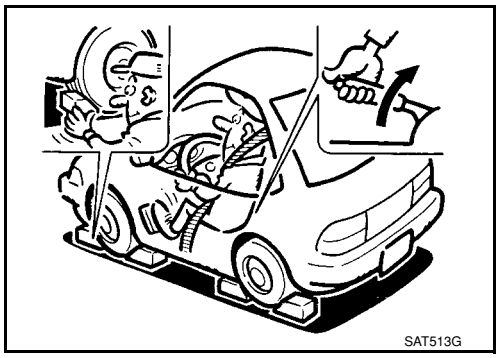

5. Start the engine, and then measure the line pressure at both idle and the stall speed.
   CAUTION:
   - **Keep the brake pedal pressed all the way down during measurement.**
   - **When measuring the line pressure at the stall speed, refer to "STALL TEST" .**

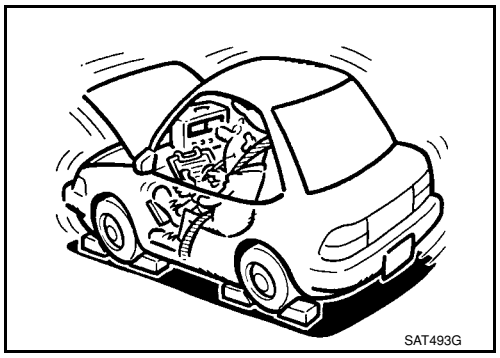

6. After the measurements are complete, install the oil pressure detection plug and tighten to the specified torque below.

   : 7.5 N·m (0.77 kg-m, 66 in-lb)

   CAUTION:
   - **Do not reuse O-ring.**
   - **Apply CVT fluid to O-ring.**

Line Pressure

Engine speed	Line pressure kPa (kg/cm^2 , psi)
	"R", "D" and "L" positions
At idle	650 (6.63, 94.3)
At stall	4,250 (43.35, 616.3)*

*: Reference values

Judgement of Line Pressure Test

Judgement		Possible cause
Idle speed	Low for all positions (“P”, “R”, “N”, “D”, “L”)	Possible causes include malfunctions in the pressure supply system and low oil pump output. For example • Oil pump wear • Pressure regulator valve or plug sticking or spring fatigue • Oil strainer ⇒ oil pump ⇒ pressure regulator valve passage oil leak • Engine idle speed too low
	Only low for a specific position	Possible causes include an oil pressure leak in a passage or device related to the position after the pressure is distributed by the manual valve.
	High	Possible causes include a sensor malfunction or malfunction in the line pressure adjustment function. For example • Accelerator pedal position signal malfunction • CVT fluid temperature sensor malfunction • Pressure control solenoid A (line pressure solenoid) malfunction (sticking in OFF state, filter clog, cut line) • Pressure regulator valve or plug sticking
Stall speed	Line pressure does not rise higher than the line pressure for idle.	Possible causes include a sensor malfunction or malfunction in the pressure adjustment function. For example • Accelerator pedal position signal malfunction • TCM malfunction • Pressure control solenoid A (line pressure solenoid) malfunction (shorting, sticking in ON state) • Pressure regulator valve or plug sticking
	The pressure rises, but does not enter the standard position.	Possible causes include malfunctions in the pressure supply system and malfunction in the pressure adjustment function. For example • Accelerator pedal position signal malfunction • Pressure control solenoid A (line pressure solenoid) malfunction (sticking, filter clog) • Pressure regulator valve or plug sticking
	Only low for a specific position	Possible causes include an oil pressure leak in a passage or device related to the position after the pressure is distributed by the manual valve.

Road Test

INFOID:0000000001703457

DESCRIPTION

- The purpose of the test is to determine overall performance of CVT and analyze causes of problems.
- The road test consists of the following three parts:

1. “Check Before Engine Is Started”CVT-41 .
2. “Check at Idle”CVT-41 .
3. “Cruise Test”CVT-43 .

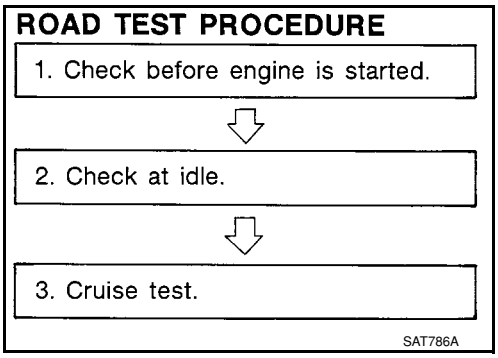

- Before road test, familiarize yourself with all test procedures and items to check.
- Perform tests on all items until specified symptom is found. Troubleshoot items which check out No Good after road test.

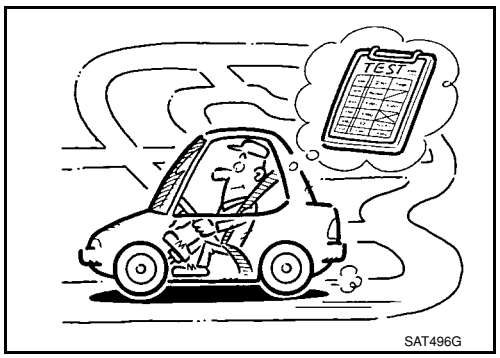

CONSULT-III START PROCEDURE

- Using CONSULT-III, perform a cruise test and record the result.
- Print the result and ensure that shifts and lock-ups take place as per Shift Schedule.

1. Touch “DATA MONITOR” on “SELECT DIAG MODE” screen.
2. Touch “MAIN SIGNALS” to set recording condition.
3. See “Numerical Display”, “Barchart Display” or “Line Graph Display”.
4. Touch “START”.
5. When performing cruise test. Refer to CVT-43, "Cruise Test" .
6. After finishing cruise test part, touch “RECORD”.
7. Touch “STORE”.
8. Touch “BACK”.
9. Touch “DISPLAY”.
10. Touch “PRINT”.
11. Check the monitor data printed out.

Check before Engine Is Started

INFOID:0000000001703458

1.CHECK O/D OFF INDICATOR LAMP

1. Park vehicle on flat surface.
2. Move selector lever to “P” position.
3. Turn ignition switch OFF. Wait at least 5 seconds.
4. Turn ignition switch ON. (Do not start engine.)

Does O/D OFF indicator lamp come on for about 2 seconds?

YES >> 1. Turn ignition switch OFF.
2. Perform self-diagnosis and note NG items.
Refer to CVT-47, "CONSULT-III Function (TRANSMISSION)" .
3. Go to CVT-41, "Check at Idle" .

NO >> Stop “Road Test”. Go to CVT-151, "O/D OFF Indicator Lamp Does Not Come On" .

Check at Idle

INFOID:0000000001703459

1.CHECK STARTING THE ENGINE

1. Park vehicle on flat surface.
2. Move selector lever to “P” or “N” position.
3. Turn ignition switch OFF.
4. Turn ignition switch START.

Is engine started?

YES >> GO TO 2.
NO >> Stop “Road Test”. Mark the box on the CVT-30, "How to Perform Trouble Diagnosis for Quick and Accurate Repair" . Go to CVT-153, "Engine Cannot Be Started in "P" and "N" Position" .

2. CHECK STARTING THE ENGINE

1. Turn ignition switch ON.
2. Move selector lever to “D”, “L” or “R” position.
3. Turn ignition switch START.

Is engine started?

YES >> Stop “Road Test”. Mark the box on the CVT-30, "How to Perform Trouble Diagnosis for Quick and Accurate Repair" . Go to CVT-153, "Engine Cannot Be Started in "P" and "N" Position" .
NO >> GO TO 3.

3. CHECK “P” POSITION FUNCTION

1. Move selector lever to “P” position.
2. Turn ignition switch OFF.
3. Release parking brake.
4. Push vehicle forward or backward.
5. Apply parking brake.

Does vehicle move when it is pushed forward or backward?

YES >> Mark the box CVT-153, "In "P" Position, Vehicle Moves Forward or Backward When Pushed" on the CVT-30, "How to Perform Trouble Diagnosis for Quick and Accurate Repair" . Continue “Road Test”.
NO >> GO TO 4.

4. CHECK “N” POSITION FUNCTION

1. Start engine.
2. Move selector lever to “N” position.
3. Release parking brake.

Does vehicle move forward or backward?

YES >> Mark the box CVT-154, "In "N" Position, Vehicle Moves" on the CVT-30, "How to Perform Trouble Diagnosis for Quick and Accurate Repair" . Continue “Road Test”.
NO >> GO TO 5.

5. CHECK SHIFT SHOCK

1. Apply foot brake.
2. Move selector lever to “R” position.

Is there large shock when changing from “N” to “R” position?

YES >> Mark the box CVT-154, "Large Shock "N" → "R" Position" on the CVT-30, "How to Perform Trouble Diagnosis for Quick and Accurate Repair" . Continue “Road Test”.
NO >> GO TO 6.

6. CHECK “R” POSITION FUNCTION

Release foot brake for several seconds.

Does vehicle creep backward when foot brake is released?

YES >> GO TO 7.
NO >> Mark the box CVT-155, "Vehicle Does Not Creep Backward in "R" Position" on the CVT-30, "How to Perform Trouble Diagnosis for Quick and Accurate Repair" . Continue “Road Test”.

7. CHECK “D”, “L” POSITIONS FUNCTION

Move selector lever to “D” and “L” positions and check if vehicle creeps forward.

Does vehicle creep forward in all positions?

YES >> Go to CVT-43, "Cruise Test" .
NO >> Stop “Road Test”. Mark the box on the CVT-30, "How to Perform Trouble Diagnosis for Quick and Accurate Repair" . Go to CVT-156, "Vehicle Does Not Creep Forward in "D" or "L" Position" .

Cruise Test

INFOID:0000000001703460

1. CHECK VEHICLE SPEED WHEN SHIFTING GEARS — PART 1

1. Drive vehicle for approximately 10 minutes to warm engine oil and CVT fluid up to operating temperature.

CVT fluid operating temperature: 50 - 80°C (122 - 176°F)

2. Park vehicle on flat surface.
3. Move selector lever to “P” position.
4. Start engine.
5. Move selector lever to “L” position.
6. Accelerate vehicle to 2/8-way throttle depressing accelerator pedal constantly.

Read vehicle speed and engine speed. Refer to CVT-45, "Vehicle Speed When Shifting Gears" .

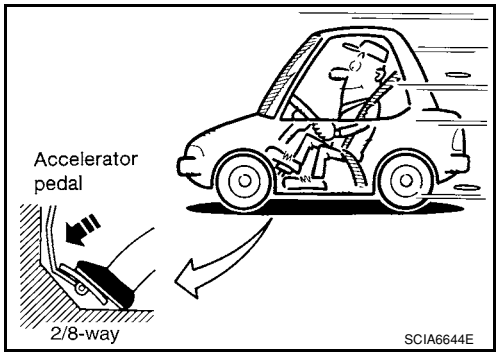

OK or NG

OK >> GO TO 2.
NG >> Mark the box of CVT-157, "Vehicle Speed Does Not Change in "L" Position" on the CVT-30, "How to Perform Trouble Diagnosis for Quick and Accurate Repair" . Continue “Road Test”.

2. CHECK VEHICLE SPEED WHEN SHIFTING GEARS — PART 2

1. Park vehicle on flat surface.
2. Move selector lever to “D” position.
3. Push overdrive control switch. (O/D OFF indicator lamp is on.)
4. Accelerate vehicle to 2/8-way throttle depressing accelerator pedal constantly.

Read vehicle speed and engine speed. Refer to CVT-45, "Vehicle Speed When Shifting Gears" .

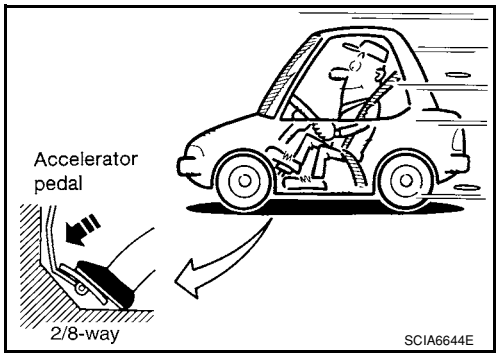

OK or NG

OK >> GO TO 3.
NG >> Mark the box of CVT-158, "Vehicle Speed Does Not Change in overdrive-off mode" on the CVT-30, "How to Perform Trouble Diagnosis for Quick and Accurate Repair" . Continue “Road Test”.

3. CHECK VEHICLE SPEED WHEN SHIFTING GEARS — PART 3

1. Park vehicle on flat surface.
2. Move selector lever to “D” position.
3. Push overdrive control switch. (O/D OFF indicator lamp is off.)
4. Accelerate vehicle to 2/8-way throttle depressing accelerator pedal constantly.

Read vehicle speed and engine speed. Refer to CVT-45, "Vehicle Speed When Shifting Gears" .

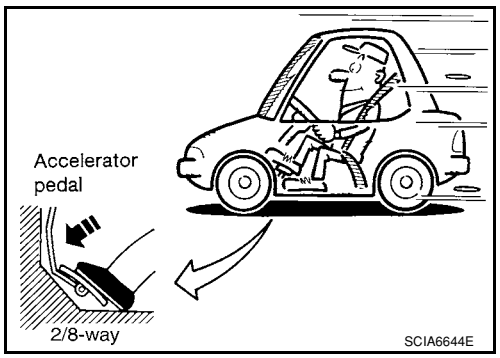

OK or NG

OK >> GO TO 4.
NG >> Mark the box of CVT-159, "Vehicle Speed Does Not Change in "D" Position" on the CVT-30, "How to Perform Trouble Diagnosis for Quick and Accurate Repair" . Continue “Road Test”.

4. CHECK VEHICLE SPEED WHEN SHIFTING GEARS — PART 4

1. Park vehicle on flat surface.
2. Move selector lever to “L” position.

3. Accelerate vehicle to full depression depressing accelerator pedal constantly.

   Read vehicle speed and engine speed. Refer to CVT-45, "Vehicle Speed When Shifting Gears" .

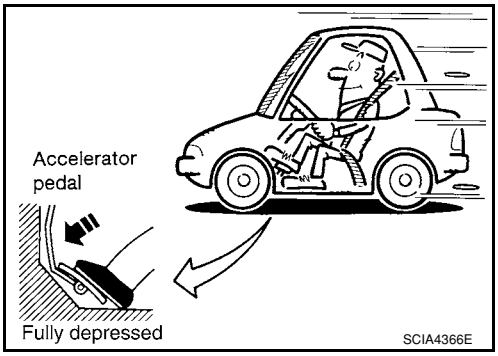

OK or NG

OK >> GO TO 5.
NG >> Mark the box of CVT-157, "Vehicle Speed Does Not Change in "L" Position" on the CVT-30, "How to Perform Trouble Diagnosis for Quick and Accurate Repair" . Continue “Road Test”.

5. CHECK VEHICLE SPEED WHEN SHIFTING GEARS — PART 5

1. Park vehicle on flat surface.
2. Move selector lever to “D” position.
3. Push overdrive control switch. (O/D OFF indicator lamp is on.)
4. Accelerate vehicle to full depressing depressing accelerator pedal constantly.

   Read vehicle speed and engine speed. Refer to CVT-45, "Vehicle Speed When Shifting Gears" .

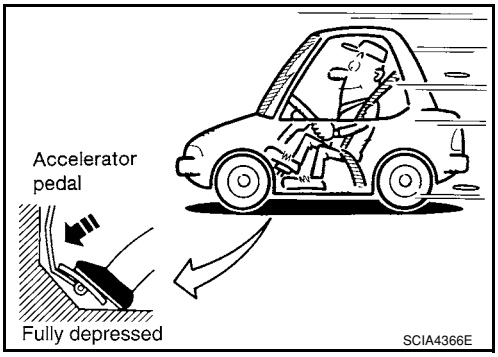

OK or NG

OK >> GO TO 6.
NG >> Mark the box of CVT-158, "Vehicle Speed Does Not Change in overdrive-off mode" on the CVT-30, "How to Perform Trouble Diagnosis for Quick and Accurate Repair" . Continue “Road Test”.

6. CHECK VEHICLE SPEED WHEN SHIFTING GEARS — PART 6

1. Park vehicle on flat surface.
2. Move selector lever to “D” position.
3. Push overdrive control switch. (O/D OFF indicator lamp is off.)
4. Accelerate vehicle to full depression depressing accelerator pedal constantly.

   Read vehicle speed and engine speed. Refer to CVT-45, "Vehicle Speed When Shifting Gears" .

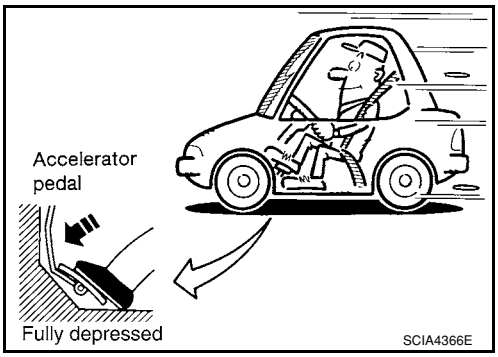

OK or NG

OK >> GO TO 7.
NG >> Mark the box of CVT-159, "Vehicle Speed Does Not Change in "D" Position" on the CVT-30, "How to Perform Trouble Diagnosis for Quick and Accurate Repair" . Continue “Road Test”.

7. CHECK ENGINE BRAKE FUNCTION — PART 1

1. Release accelerator pedal.
2. Check engine brake. (O/D OFF indicator lamp is off.)

Does engine braking effectively reduce speed in “D” position?

YES >> GO TO 8.
NO >> Mark the box of CVT-159, "Vehicle Does Not Decelerate by Engine Brake" on the CVT-30, "How to Perform Trouble Diagnosis for Quick and Accurate Repair" . Continue “Road Test”.

8. CHECK ENGINE BRAKE FUNCTION — PART 2

1. Push overdrive control switch. (O/D OFF indicator lamp is on.)
2. Check engine brake.

Does engine braking effectively reduce speed in “D” position?

YES >> GO TO 9.
NO >> Mark the box of CVT-159, "Vehicle Does Not Decelerate by Engine Brake" on the CVT-30, "How to Perform Trouble Diagnosis for Quick and Accurate Repair" . Continue “Road Test”.

9. CHECK ENGINE BRAKE FUNCTION — PART 3

1. Move selector lever to “L” position.
2. Check engine brake.

Does engine braking effectively reduce speed in “L” position?

YES >> 1. Stop the vehicle.
2. Perform self-diagnosis. Refer to CVT-47, "CONSULT-III Function (TRANSMISSION)" .

NO >> Mark the box of CVT-159, "Vehicle Does Not Decelerate by Engine Brake" on the CVT-30, "How to Perform Trouble Diagnosis for Quick and Accurate Repair" . Then continue trouble diagnosis.

Vehicle Speed When Shifting Gears

INFOID:0000000001703461

Numerical value data are reference values.

Engine type	Throttle position	Shift pattern	Engine speed (rpm)	
			At 40 km/h (25 MPH)	At 60 km/h (37 MPH)
MR18DE	8/8	“D” position Overdrive-off mode “L” position	3,600 - 4,500	4,400 - 5,300
	2/8	“D” position	1,300 - 3,100	1,400 - 3,500
		Overdrive-off mode	2,200 - 3,000	2,800 - 3,600
		“L” position	3,200 - 4,100	3,900 - 4,800

CAUTION:

Lock-up clutch is engaged when vehicle speed is approximately 18 km/h (11 MPH) to 90 km/h (56 MPH).

TCM Terminal and Reference Value

INFOID:0000000001703462

TCM HARNESS CONNECTOR TERMINAL LAYOUT

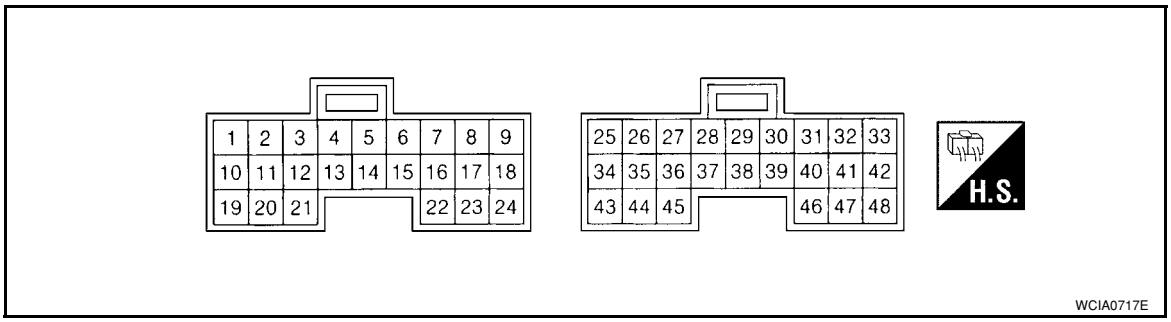

TERMINALS AND REFERENCE VALUES FOR TCM

Data are reference values and are measured between each terminal and ground.

Terminal	Wire color	Item	Condition		Data (Approx.)
1	GR	Pressure control solenoid valve A (Line pressure solenoid valve)		Release your foot from the accelerator pedal.	5.0 - 7.0 V
				Press the accelerator pedal all the way down.	1.0 - 3.0 V
2	LG	Pressure control solenoid valve B (Secondary pressure solenoid valve)	and	Release your foot from the accelerator pedal.	5.0 - 7.0 V
				Press the accelerator pedal all the way down.	3.0 - 4.0 V
3	SB	Torque converter clutch solenoid valve		When vehicle cruises in “D” position. When CVT performs lock-up.	6.0 V
				When vehicle cruises in “D” position. When CVT does not perform lock-up.	1.0 V

Terminal	Wire color	Item	Condition		Data (Approx.)
4	BR	Lock-up select solenoid valve		Selector lever in “P” and “N” positions	Battery voltage
				Wait at least for 5 seconds with the selector lever in “R”, “D” and “L” positions	0 V
5	L	CAN-H	—		—
6	P	CAN-L	—		—
8	V	Back-up lamp relay		Selector lever in “R” position.	0 V
				Selector lever in other positions.	Battery voltage
10	R	Power supply		—	Battery voltage
				—	0 V
11	L	Step motor A	Within 2 seconds after ignition switch ON, the time measurement by using the pulse width measurement function (Hi level) of CONSULT-III.*1 *1: A circuit tester cannot be used to test this item.		30.0 msec
12	Y	Step motor B			10.0 msec
13	G	ROM assembly	—		—
14	Y	ROM assembly	—		—
15	G	ROM assembly	—		—
19	R	Power supply		—	Battery voltage
				—	0 V
20	W	Step motor C	Within 2 seconds after ignition switch ON, the time measurement by using the pulse width measurement function (Hi level) of CONSULT-III.*1 *1: A circuit tester cannot be used to test this item.		30.0 msec
21	P	Step motor D			10.0 msec
24	BR	Starter relay		Selector lever in “N” and “P”positions.	Battery voltage
				Selector lever in other positions.	0 V
25	B	Ground	Always		0 V
27	GR	PNP switch 1		Selector lever in “R”, “N” and “D” positions.	0 V
				Selector lever in “P” and “L” positions.	Battery voltage
28	Y	Power supply (memory back-up)	Always		Battery voltage
29	R	Output speed sensor (Secondary speed sensor)		When driving [“D” position, 20 km/h (12 MPH)].	570 Hz
31	LG	K-LINE	—		—

Terminal	Wire color	Item	Condition		Data (Approx.)
32	Y	PNP switch 3 (monitor)		Selector lever in “D” and “L” positions.	0 V
				Selector lever in “P”, “R” and “N” positions.	8.0 V - Battery voltage
34	SB	PNP switch 2		Selector lever in “N”, “D” and “L” positions.	0 V
				Selector lever in “P” and “R” positions.	10.0 V - Battery voltage
35	W	PNP switch 3		Selector lever in “D” and “L” positions.	0 V
				Selector lever in “P”, “R” and “N” positions.	8.0 V - Battery voltage
36	W	PNP switch 4		Selector lever in “R” and “D” positions.	0 V
				Selector lever in “P”, “N” and “L” positions.	10.0 V - Battery voltage
37	L	Transmission fluid pressure sensor A (Secondary pressure sensor)	and	“N” position idle	1.0 V
38	V	Input speed sensor (Primary speed sensor)		When driving [“L” position, 20 km/h (12 MPH)].	1000 Hz
41	G	Transmission fluid pressure sensor B (Primary pressure sensor)	and	“N” position idle	0.7 V
42	LG	Sensor ground	Always		0 V
46	O	Sensor power		—	5.0 V
				—	0 V
47	G	CVT fluid temperature sensor		When CVT fluid temperature is 20°C (68°F)	2.0 V
				When CVT fluid temperature is 80°C (176°F)	1.0 V
48	B	Ground	Always		0 V

CONSULT-III Function (TRANSMISSION)

INFOID:0000000001703463

CONSULT-III can display each diagnostic item using the diagnostic test modes shown below.

FUNCTION

Diagnostic test mode	Function
Work support	This mode enables a technician to adjust some devices faster and more accurately by following the indications on CONSULT-III.
Self-diagnostic results	Self-diagnostic results can be read and erased quickly.
Data monitor	Input/Output data in the TCM can be read.

Diagnostic test mode	Function
CAN diagnostic support monitor	The results of transmit/receive diagnosis of CAN communication can be read.
CALIB data	Characteristic information for TCM and CVT assembly can be read.
Function test	Performed by CONSULT-III instead of a technician to determine whether each system is “OK” or “NG”.
ECU part number	TCM part number can be read.

CONSULT-III REFERENCE VALUE

Item name	Condition	Display value (Approx.)
VSP SENSOR	During driving	Approximately matches the speedometer reading.
ESTM VSP SIG*		
PRI SPEED SEN	During driving (lock-up ON)	Approximately matches the engine speed.
ENG SPEED SIG	Engine running	Closely matches the tachometer reading.
SEC HYDR SEN	“N” position idle	1.0 V
PRI HYDR SEN	“N” position idle	0.7 V
ATF TEMP SEN	When CVT fluid temperature is 20°C (68°F).	2.0 V
	When CVT fluid temperature is 80°C (176°F).	1.0 V
VIGN SEN	Ignition switch: ON	Battery voltage
VEHICLE SPEED	During driving	Approximately matches the speedometer reading.
PRI SPEED	During driving (lock-up ON)	Approximately matches the engine speed.
SEC SPEED	During driving	50 X Approximately matches the speedometer reading.
ENG SPEED	Engine running	Closely matches the tachometer reading.
GEAR RATIO	During driving	2.56 - 0.43
ACC PEDAL OPEN	Released accelerator pedal - Fully depressed accelerator pedal	0.0/8 - 8.0/8
SEC PRESS	“N” position idle	0.8 MPa
PRI PRESS	“N” position idle	0.4 MPa
STM STEP	During driving	–20 step - 180 step
ISOLT1	Lock-up OFF	0.0 A
	Lock-up ON	0.7 A
ISOLT2	Release your foot from the accelerator pedal.	0.8 A
	Press the accelerator pedal all the way down.	0.0 A
ISOLT3	Secondary pressure low - Secondary pressure high.	0.8 - 0.0 A
SOLMON1	Lock-up OFF	0.0 A
	Lock-up ON	0.7 A
SOLMON2	“N” position idle	0.8 A
	When stalled	0.3 - 0.6 A
SOLMON3	“N” position idle	0.6 - 0.7 A
	When stalled	0.4 - 0.6 A
INH SW3M	Selector lever in “D” and “L” positions	ON
	Selector lever in “P”, “R” and “N” positions	OFF
INH SW4	Selector lever in “R” and “D” positions	ON
	Selector lever in “P”, “N” and “L” positions	OFF

Item name	Condition	Display value (Approx.)
INH SW3	Selector lever in “D” and “L” positions	ON
	Selector lever in “P”, “R” and “N” positions	OFF
INH SW2	Selector lever in “N”, “D” and “L” positions	ON
	Selector lever in “P” and “R” positions	OFF
INH SW1	Selector lever in “R”, “N” and “D” positions	ON
	Selector lever in “P” and “L” positions	OFF
BRAKE SW	Depressed brake pedal	ON
	Released brake pedal	OFF
FULL SW	Fully depressed accelerator pedal	ON
	Released accelerator pedal	OFF
IDLE SW	Released accelerator pedal	ON
	Fully depressed accelerator pedal	OFF
SPORT MODE SW	While pushing overdrive cancel switch	ON
	Other conditions	OFF
INDDRNG	Selector lever in “D” position	ON
	Selector lever in other positions	OFF
INDLRNG	Selector lever in “L” position	ON
	Selector lever in other positions	OFF
INDNRNG	Selector lever in “N” position	ON
	Selector lever in other positions	OFF
INDRRNG	Selector lever in “R” position	ON
	Selector lever in other positions	OFF
INDPRNG	Selector lever in “P” position	ON
	Selector lever in other positions	OFF
SMCOIL D	During driving	Changes ON ⇔ OFF.
SMCOIL C		
SMCOIL B		
SMCOIL A		
LUSEL SOL OUT	Selector lever in “P” and “N” positions	ON
	Wait at least for 5 seconds with the selector lever in “R”, “D” and “L” positions	OFF
STRTR RLY OUT	Selector lever in “P” and “N” positions	ON
	Selector lever in other positions	OFF
STRTR RLY MON	Selector lever in “P” and “N” positions	ON
	Selector lever in other positions	OFF
RANGE	Selector lever in “N” or “P” position.	N·P
	Selector lever in “R” position.	R
	Selector lever in “D” position.	D
	Selector lever in “L” position.	L

*: Models without ABS does not indicate.

WORK SUPPORT MODE

Display Item List

Item name	Description
ENGINE BRAKE ADJ.	The engine brake level setting can be canceled.
CONFORM CVTF DETERIORTN	The CVT fluid deterioration level can be checked.

Engine Brake Adjustment

"ENGINE BRAKE LEVEL"

0: Initial set value (Engine brake level control is activated)

OFF: Engine brake level control is deactivated.

CAUTION:
Mode of "+1""0""-1""-2""OFF" can be selected by pressing the "UP""DOWN" on CONSULT-III screen. However, do not select mode other than "0" and "OFF". If the "+1" or "-1" or "-2" is selected, that might cause the irregular driveability.

Check CVT Fluid Deterioration Date

"CVTF DETERIORATION DATE"

More than 210000:

It is necessary to change CVT fluid.

Less than 210000:

It is not necessary to change CVT fluid.

CAUTION:
Touch "CLEAR" after changing CVT fluid, and then erase "CVTF DETERIORATION DATE".

SELF-DIAGNOSTIC RESULT MODE

After performing self-diagnosis, place check marks for results on the CVT-30, "How to Perform Trouble Diagnosis for Quick and Accurate Repair" . Reference pages are provided following the items.

Display Items List

X: Applicable —: Not applicable

Items (CONSULT-III screen terms)	Malfunction is detected when...	TCM self-diagnosis	OBD-III (DTC)	Reference page
		"TRANSMISSION" with CONSULT-III	MIL indicator lamp*1, "ENGINE" with CONSULT-III or GST	
CAN COMM CIRCUIT	When TCM is not transmitting or receiving CAN communication signal for 2 seconds or more	U1000	U1000	CVT-56
CONTROL UNIT(CAN)	When detecting error during the initial diagnosis of CAN controller of TCM	U1010	U1010	CVT-59
STARTER RELAY/CIRC	If this signal is ON other than in "P" or "N" position, this is judged to be a malfunction (And if it is OFF in "P" or "N" position, this is judged to be a malfunction too)	P0615	—	CVT-60
BRAKE SW/CIRC	When the brake switch does not switch to ON or OFF	P0703	—	CVT-63
PNP SW/CIRC	• PNP switch 1-4 signals input with impossible pattern • PNP switch 3 monitor terminal open or short circuit	P0705	P0705	CVT-65
ATF TEMP SEN/CIRC	During running, the CVT fluid temperature sensor signal voltage is excessively high or low	P0710	P0710	CVT-71
INPUT SPD SEN/CIRC	• Input speed sensor (primary speed sensor) signal is not input due to an open circuit • An unexpected signal is input when vehicle is being driven	P0715	P0715	CVT-76

Items (CONSULT-III screen terms)	Malfunction is detected when...	TCM self-diagnosis	OBD-III (DTC)	Reference page
		"TRANSMISSION" with CONSULT-III	MIL indicator lamp*1, "ENGINE" with CONSULT-III or GST	
VEH SPD SEN/CIR AT	• Signal from vehicle speed sensor CVT [Output speed sensor (Secondary speed sensor)] not input due to open or short circuit • Unexpected signal input during running	P0720	P0720	CVT-80
ENGINE SPEED SIG	• TCM does not receive the CAN communication signal from the ECM • Engine speed is too low while driving	P0725	—	CVT-85
BELT DAMG	Unexpected gear ratio detected	P0730	—	CVT-87
TCC SOLENOID/CIRC	Normal voltage not applied to solenoid due to open or short circuit	P0740	P0740	CVT-88
A/T TCC S/V FNCTN	• CVT cannot perform lock-up even if electrical circuit is good • TCM detects as irregular by comparing difference value with slip rotation • There is big difference engine speed and primary speed when TCM lock-up signal is on	P0744	P0744	CVT-93
L/PRESS SOL/CIRC	• Normal voltage not applied to solenoid due to open or short circuit • TCM detects as irregular by comparing target value with monitor value	P0745	P0745	CVT-95
PRS CNT SOL/A FCTN	Unexpected gear ratio was detected in the LOW side due to excessively low line pressure	P0746	P0746	CVT-100
PRS CNT SOL/B FCTN	Secondary pressure is too high or too low compared with the commanded value while driving	P0776	P0776	CVT-102
PRS CNT SOL/B CIRC	• Normal voltage not applied to solenoid due to cut line, short, or the like • TCM detects as irregular by comparing target value with monitor value	P0778	P0778	CVT-104
TR PRS SENS/A CIRC	Signal voltage of the transmission fluid pressure sensor A (secondary pressure sensor) is too high or too low while driving	P0840	P0840	CVT-109
PRESS SEN/FNCTN	Correlation between the values of the transmission fluid pressure sensor A (secondary pressure sensor) and the transmission fluid pressure sensor B (primary pressure sensor) is out of specification	P0841	—	CVT-113
TR PRS SENS/B CIRC	Signal voltage of the transmission fluid pressure sensor B (primary pressure sensor) is too high or too low while driving	P0845	P0845	CVT-115
SEC/PRESS DOWN	Secondary fluid pressure is too low compared with the commanded value while driving	P0868	—	CVT-119
TCM-POWER SUPPLY	• When the power supply to the TCM is cut OFF, for example because the battery is removed, and the self-diagnosis memory function stops • This is not a malfunction message (Whenever shutting OFF a power supply to the TCM, this message appears on the screen)	P1701	—	CVT-121
TP SEN/CIRC A/T	TCM does not receive the proper accelerator pedal position signals (input by CAN communication) from ECM	P1705	—	CVT-125
ESTM VEH SPD SIG*2	• CAN communication with the ABS actuator and the electric unit (control unit) is malfunctioning • There is a great difference between the vehicle speed signal from the ABS actuator and the electric unit (control unit), and the vehicle speed sensor signal	P1722	—	CVT-127

Items (CONSULT-III screen terms)	Malfunction is detected when...	TCM self-diagnosis	OBD-III (DTC)	Reference page
		"TRANSMISSION" with CONSULT-III	MIL indicator lamp*1, "ENGINE" with CONSULT-III or GST	
CVT SPD SEN/ FNCTN	A rotation sensor error is detected because the gear does not change in accordance with the position of the stepping motor **CAUTION:** **One of the "P0720 VEH SPD SEN/CIR AT", the "P0715 INPUT SPD SEN/CIRC" or the "P0725 ENGINE SPEED SIG" is displayed with the DTC at the same time**	P1723	—	CVT-129
ELEC TH CONTROL	The electronically controlled throttle for ECM is malfunctioning	P1726	—	CVT-131
LU-SLCT SOL/ CIRC	• Normal voltage not applied to solenoid due to cut line, short, or the like • TCM detects as irregular by comparing target value with monitor value	P1740	P1740	CVT-132
L/PRESS CONTROL	TCM detects the unexpected line pressure	P1745	—	CVT-136
STEP MOTR CIRC	Each coil of the step motor is not energized properly due to an open or a short	P1777	P1777	CVT-137
STEP MOTR/FNC	There is a great difference between the number of steps for the stepping motor and for the actual gear ratio	P1778	P1778	CVT-141
NO DTC IS DETECTED: FURTHER TESTING MAY BE REQUIRED	No NG item has been detected	X	X	—

*1: Refer to CVT-27, "Malfunction Indicator Lamp (MIL)" .

*2: Models without ABS does not indicate.

DATA MONITOR MODE

Display Items List

X: Standard, —: Not applicable, ▼: Option

Monitored item (Unit)	Monitor item selection			Remarks
	ECU INPUT SIGNALS	MAIN SIGNALS	SELECTION FROM MENU	
VSP SENSOR (km/h)	X	—	▼	Output speed sensor (secondary speed sensor).
ESTM VSP SIG (km/h)	X	—	▼	Models without ABS does not indicate.
PRI SPEED SEN (rpm)	X	—	▼	
ENG SPEED SIG (rpm)	X	—	▼	
SEC HYDR SEN (V)	X	—	▼	
PRI HYDR SEN (V)	X	—	▼	
ATF TEMP SEN (V)	X	—	▼	CVT fluid temperature sensor
VIGN SEN (V)	X	—	▼	
VEHICLE SPEED (km/h)	—	X	▼	Vehicle speed recognized by the TCM.
PRI SPEED (rpm)	—	X	▼	Primary pulley speed.
SEC SPEED (rpm)	—	—	▼	Secondary pulley speed.

Monitored item (Unit)	Monitor item selection			Remarks
	ECU INPUT SIGNALS	MAIN SIGNALS	SELECTION FROM MENU	
ENG SPEED (rpm)	—	X	▼	
SLIP REV (rpm)	—	X	▼	Difference between engine speed and primary pulley speed
GEAR RATIO	—	X	▼	
G SPEED (G)	—	—	▼	
ACC PEDAL OPEN (0.0/8)	X	X	▼	Degree of opening for accelerator recognized by the TCM For fail-safe operation, the specific value used for control is displayed.
TRQ RTO	—	—	▼	
SEC PRESS (MPa)	—	X	▼	
PRI PRESS (MPa)	—	X	▼	
ATFTEMP COUNT	—	X	▼	Means CVT fluid temperature. Actual oil temperature (°C) cannot be checked unless a numeric value is converted. Refer to CVT-8.
DSR REV (rpm)	—	—	▼	
DGEAR RATIO	—	—	▼	
DSTM STEP (step)	—	—	▼	
STM STEP (step)	—	X	▼	
LU PRS (MPa)	—	—	▼	
LINE PRS (MPa)	—	—	▼	
TGT SEC PRESS (MPa)	—	—	▼	
ISOLT1 (A)	—	X	▼	Torque converter clutch solenoid valve output current
ISOLT2 (A)	—	X	▼	Pressure control solenoid valve A (line pressure solenoid valve) output current
ISOLT3 (A)	—	X	▼	Pressure control solenoid valve B (secondary pressure solenoid valve) output current
SOLMON1 (A)	X	X	▼	Torque converter clutch solenoid valve monitor current
SOLMON2 (A)	X	X	▼	Pressure control solenoid valve A (line pressure solenoid valve) monitor current
SOLMON3 (A)	X	X	▼	Pressure control solenoid valve B (secondary pressure solenoid valve) monitor current
INH SW3M (ON/OFF)	X	—	▼	PNP switch 3 ON-OFF status monitor
INH SW4 (ON/OFF)	X	—	▼	PNP switch 4 ON-OFF status
INH SW3 (ON/OFF)	X	—	▼	PNP switch 3 ON-OFF status
INH SW2 (ON/OFF)	X	—	▼	PNP switch 2 ON-OFF status
INH SW1 (ON/OFF)	X	—	▼	PNP switch 1 ON-OFF status
BRAKE SW (ON/OFF)	X	X	▼	Stop lamp switch (Signal input with CAN comunication)

Monitored item (Unit)	Monitor item selection			Remarks
	ECU INPUT SIGNALS	MAIN SIGNALS	SELECTION FROM MENU	
FULL SW (ON/OFF)	X	X	▼	Signal input with CAN communications
IDLE SW (ON/OFF)	X	X	▼	
SPORT MODE SW (ON/OFF)	X	X	▼	Overdrive control switch (Signal input with CAN comunication)
STRDWNSW (ON/OFF)	X	—	▼	Not mounted but displayed.
STRUPSW (ON/OFF)	X	—	▼	
DOWNLVR (ON/OFF)	X	—	▼	
UPLVR (ON/OFF)	X	—	▼	
NONMMODE (ON/OFF)	X	—	▼	
MMODE (ON/OFF)	X	—	▼	
INDLRNG (ON/OFF)	—	—	▼	“L” position indicator output
INDDRNG (ON/OFF)	—	—	▼	“D” position indicator output
INDNRNG (ON/OFF)	—	—	▼	“N” position indicator output
INDRRNG (ON/OFF)	—	—	▼	“R” position indicator output
INDPRNG (ON/OFF)	—	—	▼	“P” position indicator output
CVT LAMP (ON/OFF)	—	—	▼	
SPORT MODE IND (ON/OFF)	—	—	▼	
MMODE IND (ON/OFF)	—	—	▼	Not mounted but displayed.
SMCOIL D (ON/OFF)	—	—	▼	Step motor coil “D” energizing status
SMCOIL C (ON/OFF)	—	—	▼	Step motor coil “C” energizing status
SMCOIL B (ON/OFF)	—	—	▼	Step motor coil “B” energizing status
SMCOIL A (ON/OFF)	—	—	▼	Step motor coil “A” energizing status
LUSEL SOL OUT (ON/OFF)	—	—	▼	
REV LAMP (ON/OFF)	—	X	▼	
STRTR RLY OUT (ON/OFF)	—	—	▼	Starter relay
LUSEL SOL MON (ON/OFF)	—	—	▼	
STRTR RLY MON (ON/OFF)	—	—	▼	Starter relay
VDC ON (ON/OFF)	X	—	▼	Not mounted but displayed.
TCS ON (ON/OFF)	X	—	▼	
ABS ON (ON/OFF)	X	—	▼	
ACC ON (ON/OFF)	X	—	▼	Not mounted but displayed.
RANGE	—	X	▼	Indicates position is recognized by TCM. Indicates a specific value required for control when fail-safe function is activated.
M GEAR POS	—	X	▼	
Voltage (V)	—	—	▼	Displays the value measured by the voltage probe.

Monitored item (Unit)	Monitor item selection			Remarks
	ECU INPUT SIGNALS	MAIN SIGNALS	SELECTION FROM MENU	
Frequency (Hz)	—	—	▼	The value measured by the pulse probe is displayed.
DUTY-HI (high) (%)	—	—	▼	
DUTY-LOW (low) (%)	—	—	▼	
PLS WIDTH-HI (ms)	—	—	▼	
PLS WIDTH-LOW (ms)	—	—	▼	

Diagnosis Procedure without CONSULT-III

INFOID:0000000001703464

OBD-II SELF-DIAGNOSTIC PROCEDURE (WITH GST)

Refer to EC-119, "Generic Scan Tool (GST) Function".

DTC U1000 CAN COMMUNICATION LINE

Description

INFOID:0000000001703465

CAN (Controller Area Network) is a serial communication line for real time application. It is an on-vehicle multiplex communication line with high data communication speed and excellent malfunction detection ability. Many electronic control units are equipped onto a vehicle, and each control unit shares information and links with other control units during operation (not independent). In CAN communication, control units are connected with 2 communication lines (CAN-H line, CAN-L line) allowing a high rate of information transmission with less wiring. Each control unit transmits/receives data but selectively reads required data only.

On Board Diagnosis Logic

INFOID:0000000001703466

- This is an OBD-II self-diagnostic item.
- Diagnostic trouble code “U1000 CAN COMM CIRCUIT” with CONSULT-III is detected when TCM cannot communicate to other control units.

Possible Cause

INFOID:0000000001703467

Harness or connectors
(CAN communication line is open or shorted.)

DTC Confirmation Procedure

INFOID:0000000001703468

NOTE:
If “DTC Confirmation Procedure” has been previously performed, always turn ignition switch OFF and wait at least 10 seconds before performing the next test.
After the repair, touch “ERASE” on “SELF-DIAG RESULTS” and then perform the following procedure to confirm the malfunction is eliminated.

WITH CONSULT-III

1. Turn ignition switch ON. (Do not start engine.)
2. Select “DATA MONITOR” mode for “TRANSMISSION” with CONSULT-III.
3. Start engine and wait for at least 6 seconds.
4. If DTC is detected, go to CVT-58, "Diagnosis Procedure" .

WITH GST

Follow the procedure “WITH CONSULT-III”.

Wiring Diagram - CVT - CAN

INFOID:0000000001703469

CVT-CAN-01

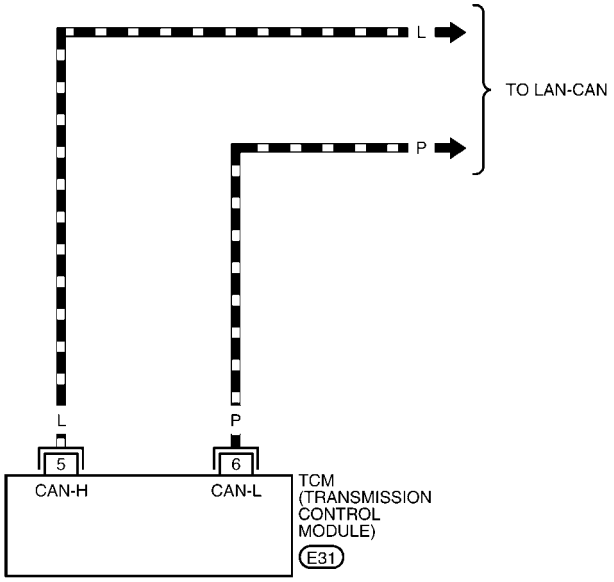

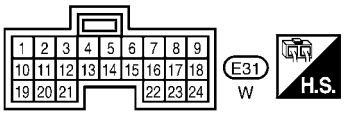

BCWA0668E

TCM TERMINALS AND REFERENCE VALUES

Refer to CVT-45, "TCM Terminal and Reference Value".

Diagnosis Procedure

INFOID:0000000001703470

1. CHECK CAN COMMUNICATION CIRCUIT

With CONSULT-III

1. Turn ignition switch ON and start engine.
2. Select “SELF-DIAG RESULTS” mode for “TRANSMISSION” with CONSULT-III.

Is any malfunction of the “U1000 CAN COMM CIRCUIT” indicated?

YES >> Print out CONSULT-III screen, go to LAN section. Refer to LAN-23, "CAN System Specification Chart" .

NO >> **INSPECTION END**

DTC U1010 TRANSMISSION CONTROL MODULE (CAN)

Description

INFOID:0000000001703471

CAN (Controller Area Network) is a serial communication line for real time application. It is an on-vehicle multiplex communication line with high data communication speed and excellent malfunction detection ability. Many electronic control units are equipped onto a vehicle, and each control unit shares information and links with other control units during operation (not independent). In CAN communication, control units are connected with 2 communication lines (CAN-H line, CAN-L line) allowing a high rate of information transmission with less wiring. Each control unit transmits/receives data but selectively reads required data only.

On Board Diagnosis Logic

INFOID:0000000001703472

- This is an OBD-II self-diagnostic item.
- Diagnostic trouble code “U1010 CONTROL UNIT(CAN)” with CONSULT-III is detected when TCM cannot communicate to other control units.

Possible Cause

INFOID:0000000001703473

Harness or connectors
(CAN communication line is open or shorted.)

DTC Confirmation Procedure

INFOID:0000000001703474

NOTE:
If “DTC Confirmation Procedure” has been previously performed, always turn ignition switch OFF and wait at least 10 seconds before performing the next test.
After the repair, touch “ERASE” on “SELF-DIAG RESULTS” and then perform the following procedure to confirm the malfunction is eliminated.

WITH CONSULT-III

1. Turn ignition switch ON. (Do not start engine.)
2. Select “DATA MONITOR” mode for “TRANSMISSION” with CONSULT-III.
3. Start engine and wait for at least 6 seconds.
4. If DTC is detected, go to CVT-59, "Diagnosis Procedure".

WITH GST

Follow the procedure “WITH CONSULT-III”.

Diagnosis Procedure

INFOID:0000000001703475

1.CHECK DTC

With CONSULT-III

1. Turn ignition switch ON. (Do not start engine.)
2. Select “SELF-DIAG RESULTS” mode for “TRANSMISSION” with CONSULT-III.
3. Touch “ERASE”.
4. Turn ignition switch OFF and wait for at least 10 seconds.
5. Perform “DTC confirmation procedure”. Refer to CVT-59, "DTC Confirmation Procedure".

Is any malfunction of the “U1010 CONTROL UNIT(CAN)” indicated?

YES >> Replace the TCM. Refer to CVT-161, "Removal and Installation".
NO >> **INSPECTION END**

DTC P0615 START SIGNAL CIRCUIT

Description

INFOID:0000000001703476

- TCM controls starter relay in IPDM E/R.
- TCM switches starter relay ON at “P” or “N” position and allows to crank engine.
- Then it prohibits cranking other than at “P” or “N” position.

CONSULT-III Reference Value in Data Monitor Mode

INFOID:0000000001703477

Item name	Condition	Display value
STRTR RLY OUT	Selector lever in “P” and “N” positions	ON
	Selector lever in other positions	OFF
STRTR RLY MON	Selector lever in “P” and “N” positions	ON
	Selector lever in other positions	OFF

On Board Diagnosis Logic

INFOID:0000000001703478

- This is not an OBD-II self-diagnostic item.
- Diagnostic trouble code “P0615 STARTER RELAY/CIRC” with CONSULT-III is detected when starter relay switched ON other than at “P” or “N” position. (or when switched OFF at “P” or “N” position).

Possible Cause

INFOID:0000000001703479

- Harness or connectors
  (Starter relay and TCM circuit is open or shorted.)
- Starter relay

DTC Confirmation Procedure

INFOID:0000000001703480

CAUTION:
Always drive vehicle at a safe speed.
NOTE:
If “DTC Confirmation Procedure” has been previously performed, always turn ignition switch OFF and wait at least 10 seconds before performing the next test.
After the repair, touch “ERASE” on “SELF-DIAG RESULTS” and then perform the following procedure to confirm the malfunction is eliminated.

WITH CONSULT-III

1. Turn ignition switch ON. (Do not start engine.)
2. Select “DATA MONITOR” mode for “TRANSMISSION” with CONSULT-III.
3. Start engine.
4. Drive vehicle for at least 2 consecutive seconds.
5. If DTC is detected, go to CVT-62, "Diagnosis Procedure" .

Wiring Diagram - CVT - STSIG

INFOID:0000000001703481

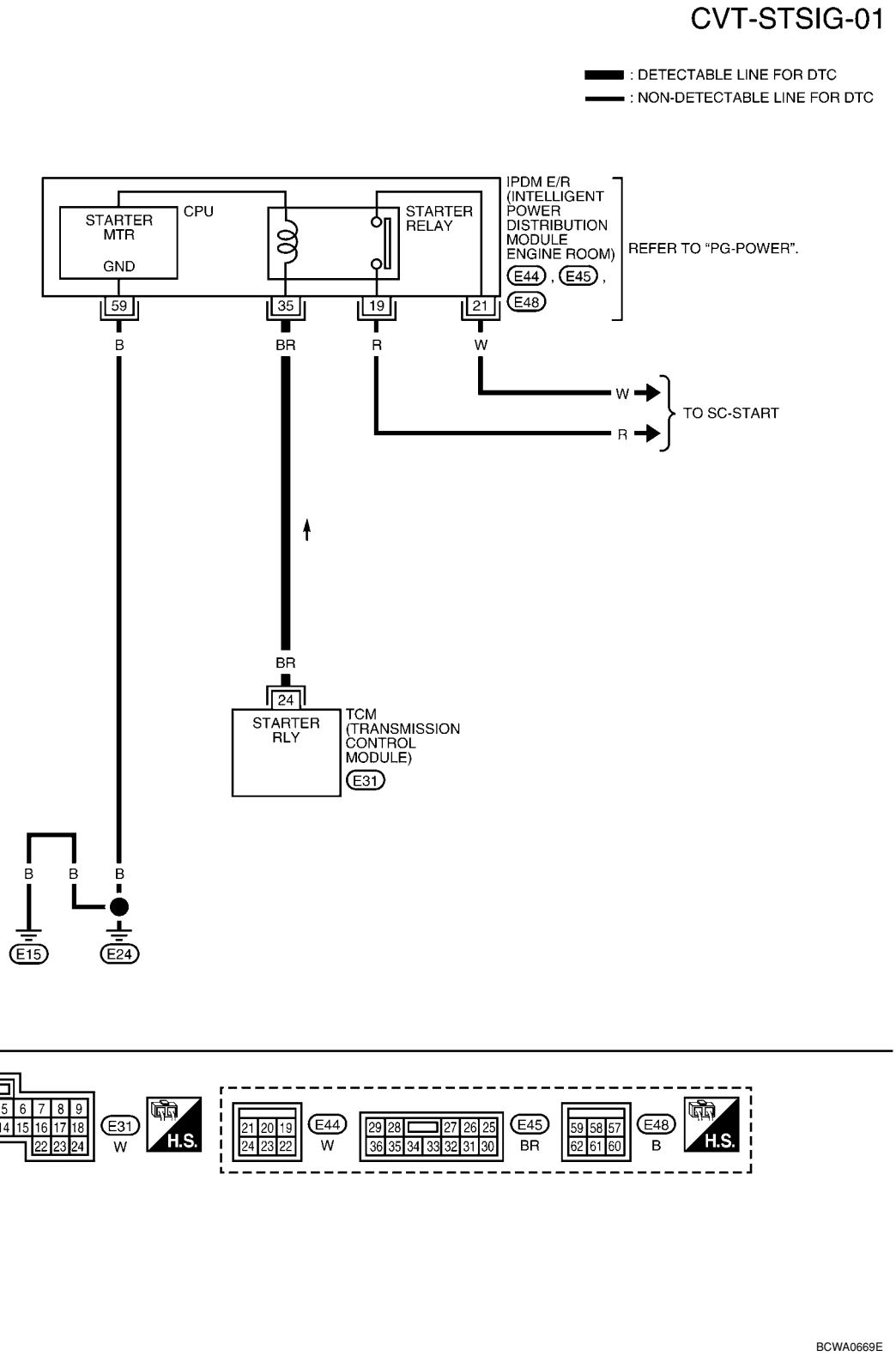

TCM TERMINALS AND REFERENCE VALUES

Refer to CVT-45, "TCM Terminal and Reference Value" .

Diagnosis Procedure

INFOID:0000000001703482

1. CHECK STARTER RELAY SIGNAL

With CONSULT-III

1. Turn ignition switch ON. (Do not start engine.)
2. Select “SELECTION FROM MENU” in “DATA MONITOR” mode for “TRANSMISSION” with CONSULT-III and check monitor “STRTR RLY OUT”, “STRTR RLY MON”(PNP relay) ON/OFF.

Item name	Condition	Display value
STRTR RLY OUT	Selector lever in “P” and “N” positions	ON
	Selector lever in other positions	OFF
STRTR RLY MON	Selector lever in “P” and “N” positions	ON
	Selector lever in other positions	OFF

Without CONSULT-III

1. Turn ignition switch ON. (Do not start engine.)
2. Check voltage between the TCM connector terminal and ground.

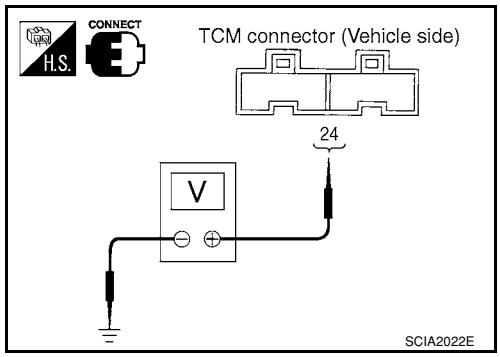

Terminal	Item	Condition		Data (Approx.)
24	Starter relay	ON	Selector lever in “N” and “P” positions	Battery voltage
			Selector lever in other positions	0 V

OK or NG

OK >> GO TO 3.
NG >> GO TO 2.

2. DETECT MALFUNCTIONING ITEM

Check the following:

- Starter relay. Refer to PG-69 .
- Open or short-circuit in the harness between TCM and the starter relay. Refer to CVT-61, "Wiring Diagram - CVT - STSIG" .
- Ground circuit for the starter relay. Refer to SC-10, "Wiring Diagram - START -" .

OK or NG

OK >> GO TO 3.
NG >> Repair or replace damaged parts.

3. CHECK DTC

Perform CVT-60, "DTC Confirmation Procedure" .

OK or NG

OK >> **INSPECTION END**
NG >> GO TO 4.

4. CHECK TCM

1. Check TCM input/output signals. Refer to CVT-45, "TCM Terminal and Reference Value" .
2. If NG, re-check TCM pin terminals for damage or loose connection with harness connector.

OK or NG

OK >> **INSPECTION END**
NG >> Repair or replace damaged parts.

DTC P0703 STOP LAMP SWITCH CIRCUIT

Description

INFOID:0000000001703483

ON, OFF status of the stop lamp switch is sent via the CAN communication from the combination meter to TCM using the signal.

CONSULT-III Reference Value in Data Monitor Mode

INFOID:0000000001703484

Item name	Condition	Display value
BRAKE SW	Depressed brake pedal	ON
	Released brake pedal	OFF

On Board Diagnosis Logic

INFOID:0000000001703485

- This is not an OBD-II self-diagnostic item.
- Diagnostic trouble code “P0703 BRAKE SW/CIRC” with CONSULT-III is detected when the stop lamp switch does not switch to ON and OFF.
- The stop lamp switch does not switch to ON, OFF.

Possible Cause

INFOID:0000000001703486

- Harness or connectors
  (Stop lamp switch, and combination meter circuit are open or shorted.)
  (CAN communication line is open or shorted.)
- Stop lamp switch

DTC Confirmation Procedure

INFOID:0000000001703487

CAUTION:
Always drive vehicle at a safe speed.
NOTE:
If “DTC Confirmation Procedure” has been previously performed, always turn ignition switch OFF and wait at least 10 seconds before performing the next test.
After the repair, touch “ERASE” on “SELF-DIAG RESULTS” and then perform the following procedure to confirm the malfunction is eliminated.

WITH CONSULT-III

1. Turn ignition switch ON. (Do not start engine.)
2. Select “DATA MONITOR” mode for “TRANSMISSION” with CONSULT-III.
3. Start engine.
4. Start vehicle for at least 3 consecutive seconds.
5. If DTC is detected, go to CVT-63, "Diagnosis Procedure".

Diagnosis Procedure

INFOID:0000000001703488

1. CHECK CAN COMMUNICATION LINE

Perform the self-diagnosis check. Refer to CVT-47, "CONSULT-III Function (TRANSMISSION)".

Is any malfunction of the “U1000 CAN COMM CIRCUIT” indicated?

YES >> Check CAN communication line. Refer to CVT-56.
NO >> GO TO 2.

2. CHECK STOP LAMP SWITCH CIRCUIT

With CONSULT-III

1. Turn ignition switch ON. (Do not start engine.)
2. Select “ECU INPUT SIGNALS” in “DATA MONITOR” mode for “TRANSMISSION” with CONSULT-III.
3. Read out ON/OFF switching action of the “BRAKE SW”.

Item name	Condition	Display value
BRAKE SW	Depressed brake pedal	ON
	Released brake pedal	OFF

OK or NG

OK >> **INSPECTION END**
NG >> GO TO 3.

3. CHECK STOP LAMP SWITCH

Check continuity between stop lamp switch harness connector E13 terminals 1 and 2. Refer to CVT-149, "Wiring Diagram - CVT - NON-DTC".

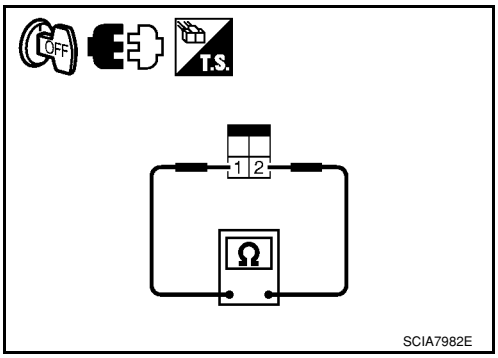

Condition	Continuity
When brake pedal is depressed	Yes
When brake pedal is released	No

Check stop lamp switch after adjusting brake pedal — refer to BR-5.

OK or NG

OK >> Check the following. If NG, repair or replace damaged parts.
- Harness for short or open between battery and stop lamp switch.
- Harness for short or open between stop lamp switch and combination meter.

NG >> Repair or replace the stop lamp switch.

DTC P0705 PARK/NEUTRAL POSITION SWITCH

Description

INFOID:0000000001703489

- The PNP switch is included in the control valve assembly.
- The PNP switch includes 4 transmission position switches.
- TCM judges the selector lever position by the PNP switch signal.

Shift position	PNP switch 1	PNP switch 2	PNP switch 3	PNP switch 4	PNP switch 3 (monitor)
P	OFF	OFF	OFF	OFF	OFF
R	ON	OFF	OFF	ON	OFF
N	ON	ON	OFF	OFF	OFF
D	ON	ON	ON	ON	ON
L	OFF	ON	ON	OFF	ON

CONSULT-III Reference Value in Data Monitor Mode

INFOID:0000000001703490

Item name	Condition	Display value
INH SW3M	Selector lever in “D” and “L” positions	ON
	Selector lever in “P”, “R” and “N” positions	OFF
INH SW4	Selector lever in “R” and “D” positions	ON
	Selector lever in “P”, “N” and “L” positions	OFF
INH SW3	Selector lever in “D” and “L” positions	ON
	Selector lever in “P”, “R” and “N” positions	OFF
INH SW2	Selector lever in “N”, “D” and “L” positions	ON
	Selector lever in “P” and “R” positions	OFF
INH SW1	Selector lever in “R”, “N” and “D” positions	ON
	Selector lever in “P” and “L” positions	OFF

On Board Diagnosis Logic

INFOID:0000000001703491

- This is an OBD-II self-diagnostic item.
- Diagnostic trouble code “P0705 PNP SW/CIRC” with CONSULT-III is detected under the following conditions.
- When TCM does not receive the correct voltage signal from the PNP switches 1, 2, 3 and 4 based on the gear position.
- When the signal from monitor terminal of PNP switch 3 is different from PNP switch 3.

Possible Cause

INFOID:0000000001703492

- Harness or connectors
  (PNP switches 1, 2, 3, 4 and TCM circuit is open or shorted.)
- PNP switches 1, 2, 3, 4
- PNP switch 3 monitor terminal is open or shorted

DTC Confirmation Procedure

INFOID:0000000001703493

CAUTION:
Always drive vehicle at a safe speed.
NOTE:
If “DTC Confirmation Procedure” has been previously performed, always turn ignition switch OFF and wait at least 10 seconds before performing the next test.
After the repair, touch “ERASE” on “SELF-DIAG RESULTS” and then perform the following procedure to confirm the malfunction is eliminated.

WITH CONSULT-III

1. Turn ignition switch ON. (Do not start engine.)
2. Select “DATA MONITOR” mode for “TRANSMISSION” with CONSULT-III.
3. Start engine.
4. Drive vehicle and maintain the following conditions for at least 2 consecutive seconds.
   VEHICLE SPEED: More than 10 km/h (6 MPH)
   ENG SPEED: More than 450 rpm
   ACC PEDAL OPEN: More than 1.0/8
5. If DTC is detected, go to CVT-68, "Diagnosis Procedure" .

WITH GST

Follow the procedure “WITH CONSULT-III”.

Wiring Diagram - CVT - PNP/SW

INFOID:0000000001703494

CVT-PNP/SW-01

: DETECTABLE LINE FOR DTC
: NON-DETECTABLE LINE FOR DTC

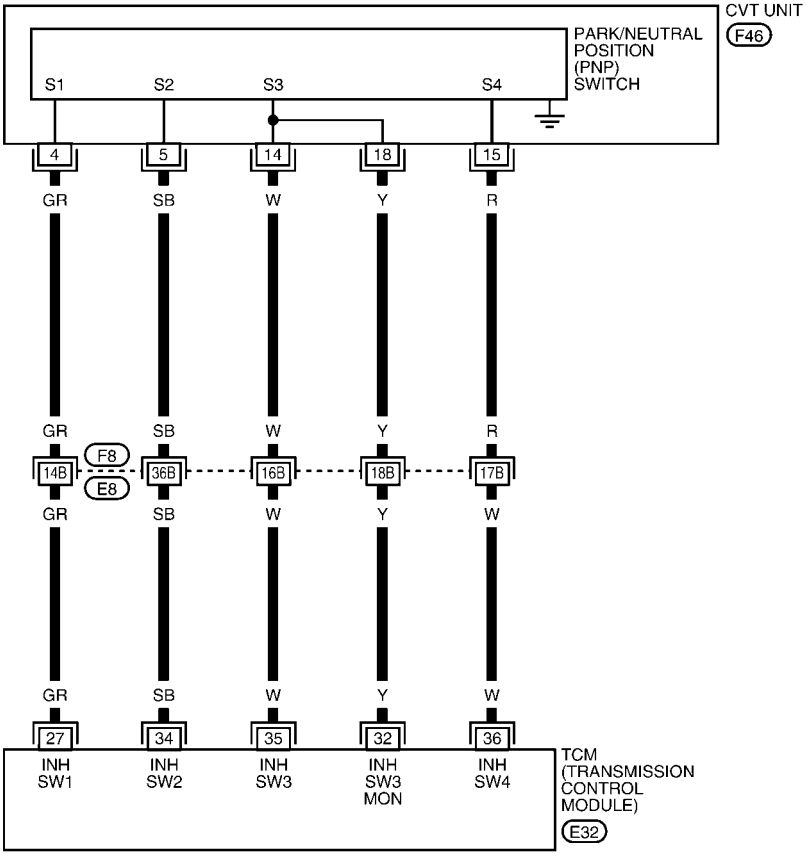

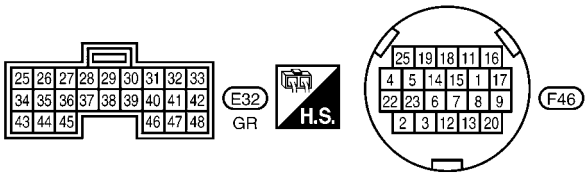

REFER TO THE FOLLOWING.
F8 - SUPER MULTIPLE JUNCTION (SMJ)

BCWA0670E

TCM TERMINALS AND REFERENCE VALUES

Refer to CVT-45, "TCM Terminal and Reference Value" .

Diagnosis Procedure

INFOID:0000000001703495

1. CHECK PNP SW SIGNALS

With CONSULT-III

1. Turn ignition switch ON. (Do not start engine.)
2. Select “ECU INPUT SIGNALS” in “DATA MONITOR” mode for “TRANSMISSION” with CONSULT-III.
3. Change selector lever to “P”, “R”, “N”, “D” and “L” positions to check the value of “INH SW1”“INH SW2” “INH SW3”“INH SW4” and “INH SW3M”.

Shift position	“INH SW1”	“INH SW2”	“INH SW3”	“INH SW4”	“INH SW3M”
P	OFF	OFF	OFF	OFF	OFF
R	ON	OFF	OFF	ON	OFF
N	ON	ON	OFF	OFF	OFF
D	ON	ON	ON	ON	ON
L	OFF	ON	ON	OFF	ON

Without CONSULT-III

1. Turn ignition switch ON. (Do not start engine.)
2. Change selector lever to “P“, “R”, “N”, “D” and “L” positions to check voltage between the TCM connector terminals and ground.

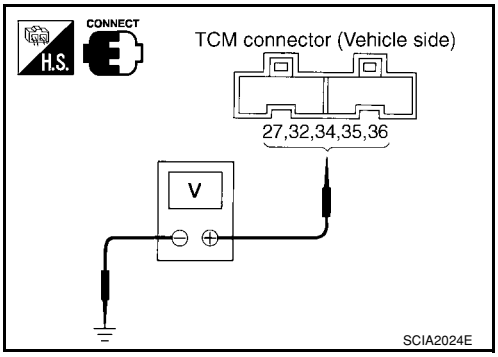

Shift position	Connector		E32		
	Terminal				
	27 - Ground	34 - Ground	35 - Ground	36 - Ground	32 - Ground
P	Battery voltage	10.0 V - Battery voltage	8.0 V - Battery voltage	10.0 V - Battery voltage	8.0 V - Battery voltage
R	0 V	10.0 V - Battery voltage	8.0 V - Battery voltage	0 V	8.0 V - Battery voltage
N	0 V	0 V	8.0 V - Battery voltage	10.0 V - Battery voltage	8.0 V - Battery voltage
D	0 V	0 V	0 V	0 V	0 V
L	Battery voltage	0 V	0 V	10.0 V - Battery voltage	0 V

OK or NG

OK >> GO TO 5.
NG >> GO TO 2.

2. CHECK PNP SWITCH CIRCUIT

1. Turn ignition switch OFF.
2. Disconnect TCM connector.

3. Check continuity between TCM connector terminals and ground.

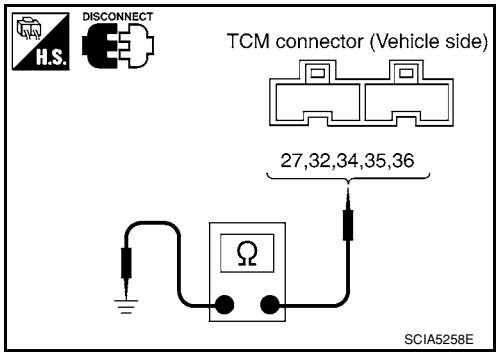

Connector	Terminal	Condition	Continuity
E32	27 - ground	Select lever in “P” and “L” positions	No
		Select lever in other positions	Yes
	34 - ground	Select lever in “P” and “R” positions	No
		Select lever in other positions	Yes
	35 - ground	Select lever in “P”, “R” and “N” positions	No
		Select lever in other positions	Yes
	36 - ground	Select lever in “P”,“N” and “L” positions	No
		Select lever in other positions	Yes
	32 - ground	Select lever in “P”, “R” and “N” positions	No
		Select lever in other positions	Yes

4. If OK, check harness for short-circuit to ground or power supply.

OK or NG

OK >> GO TO 5.
NG >> GO TO 3.

3. CHECK HARNESS BETWEEN TCM AND PNP SWITCH

1. Turn ignition switch OFF.
2. Disconnect TCM connector and CVT unit harness connector.
3. Check continuity between TCM connector terminals and CVT unit harness connector terminals.

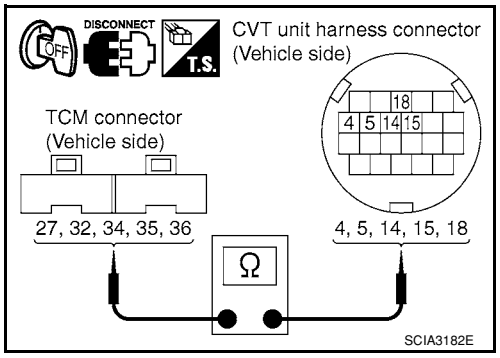

Item	Connector	Terminal	Continuity
TCM	E32	27	Yes
CVT unit harness connector	F46	4	
TCM	E32	34	Yes
CVT unit harness connector	F46	5	
TCM	E32	35	Yes
CVT unit harness connector	F46	14	
TCM	E32	32	Yes
CVT unit harness connector	F46	18	
TCM	E32	36	Yes
CVT unit harness connector	F46	15	

4. If OK, check harness for short to ground and short to power.
5. Reinstall any part removed.

OK or NG

OK >> GO TO 4.
NG >> Repair or replace damaged parts.

4. DETECT MALFUNCTIONING ITEM

Check PNP switch. Refer to CVT-70, "Component Inspection" .

OK or NG

OK >> GO TO 5.
NG >> Repair or replace damaged parts.

5. CHECK DTC

Perform CVT-65, "DTC Confirmation Procedure" .

OK or NG

OK >> **INSPECTION END**
NG >> GO TO 6.

6. CHECK TCM

1. Check TCM input/output signals. Refer to CVT-45, "TCM Terminal and Reference Value" .
2. If NG, re-check TCM pin terminals for damage or loose connection with harness connector.

OK or NG

OK >> **INSPECTION END**
NG >> 1. Repair or replace damaged parts.
2. Replace the transaxle assembly. Refer to CVT-178, "Removal and Installation" .

Component Inspection

INFOID:0000000001703496

PNP SWITCH

1. Change selector lever to various positions to check the continuity between terminals on the PNP switch and ground.

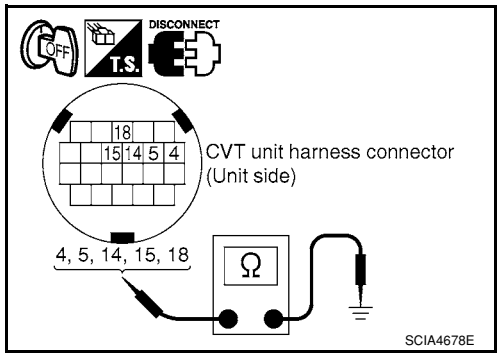

PNP SW	Shift position	Connector	Terminal	Continuity
SW 1	“R”, “N”, “D”	F46	4 - Ground	Yes
	other positions			No
SW 2	“N”, “D”, “L”		5 - Ground	Yes
	other positions			No
SW 3	“D”, “L”		14 - Ground	Yes
	other positions			No
SW 4	“R”, “D”		15 - Ground	Yes
	other positions			No
SW 3 Monitor	“D”, “L”		18 - Ground	Yes
	other positions			No

2. If NG, check continuity with control cable disconnected. (Refer to step 1 above.)
3. If OK, with the control cable disconnected, adjust the control cable. Refer to CVT-171, "Adjustment of CVT Position" .
4. If NG, even when the control cable is disconnected, replace the transaxle assembly. Refer to CVT-178, "Removal and Installation" .

DTC P0710 CVT FLUID TEMPERATURE SENSOR CIRCUIT

Description

INFOID:0000000001703497

- The CVT fluid temperature sensor is included in the control valve assembly.
- The CVT fluid temperature sensor detects the CVT fluid temperature and sends a signal to the TCM.

CONSULT-III Reference Value in Data Monitor Mode

INFOID:0000000001703498

Remarks: Specification data are reference values.

Item name	Condition	Display value (Approx.)
ATF TEMP SEN	When CVT fluid temperature is 20°C (68°F).	2.0 V
	When CVT fluid temperature is 80°C (176°F).	1.0 V

On Board Diagnosis Logic

INFOID:0000000001703499

- This is an OBD-II self-diagnostic item.
- Diagnostic trouble code “P0710 ATF TEMP SEN/CIRC” with CONSULT-III is detected when TCM receives an excessively low or high voltage from the sensor.

Possible Cause

INFOID:0000000001703500

- Harness or connectors
  (Sensor circuit is open or shorted.)
- CVT fluid temperature sensor

DTC Confirmation Procedure

INFOID:0000000001703501

CAUTION:
Always drive vehicle at a safe speed.
NOTE:
If “DTC Confirmation Procedure” has been previously performed, always turn ignition switch OFF and wait at least 10 seconds before performing the next test.
After the repair, touch “ERASE” on “SELF-DIAG RESULTS” and then perform the following procedure to confirm the malfunction is eliminated.

WITH CONSULT-III

1. Turn ignition switch ON. (Do not start engine.)
2. Select “DATA MONITOR” mode for “TRANSMISSION” with CONSULT-III.
3. Start engine and maintain the following conditions for at least 10 minutes (Total).
   VEHICLE SPEED: 10 km/h (6 MPH) or more
   ENG SPEED: 450 rpm more than
   ACC PEDAL OPEN: More than 1.0/8
   RANGE: “D” position
4. If DTC is detected, go to CVT-73, "Diagnosis Procedure".

WITH GST

Follow the procedure “WITH CONSULT-III”.

Wiring Diagram - CVT - FTS

INFOID:0000000001703502

CVT-FTS-01

: DETECTABLE LINE FOR DTC
: NON-DETECTABLE LINE FOR DTC

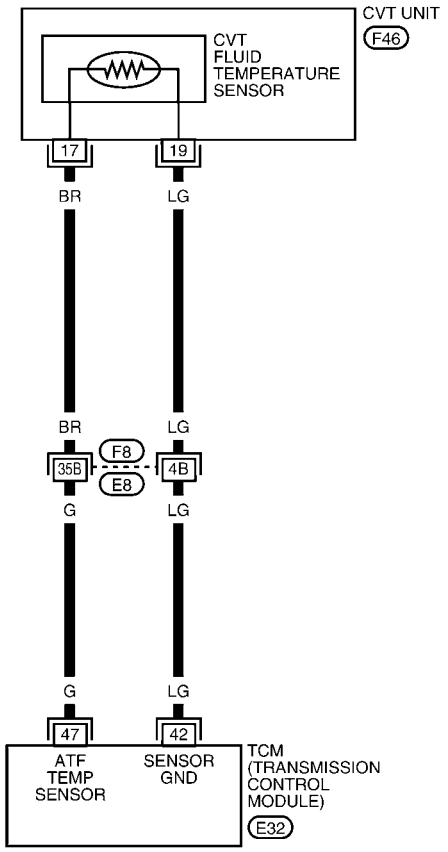

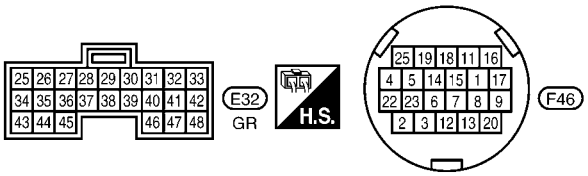

REFER TO THE FOLLOWING.
F8 - SUPER MULTIPLE JUNCTION (SMJ)

BCWA0671E

TCM TERMINALS AND REFERENCE VALUES

Refer to CVT-45, "TCM Terminal and Reference Value".

Diagnosis Procedure

INFOID:0000000001703503

1. CHECK CVT FLUID TEMPERATURE SENSOR SIGNAL

With CONSULT-III

1. Start engine.
2. Select “ECU INPUT SIGNALS” in “DATA MONITOR” mode for “TRANSMISSION” with CONSULT-III.
3. Read out the value of “ATF TEMP SEN”.

Item name	Condition	Display value (Approx.)
ATF TEMP SEN	When CVT fluid temperature is 20°C (68°F).	2.0 V
	When CVT fluid temperature is 80°C (176°F).	1.0 V

Without CONSULT-III

1. Start engine.
2. Check voltage between TCM connector terminals.

Name	Connector	Terminal	Temperature °C (°F)	Voltage (Approx.)
CVT fluid temperature sensor	E32	47 - 42	20 (68)	2.0 V
			80 (176)	1.0 V

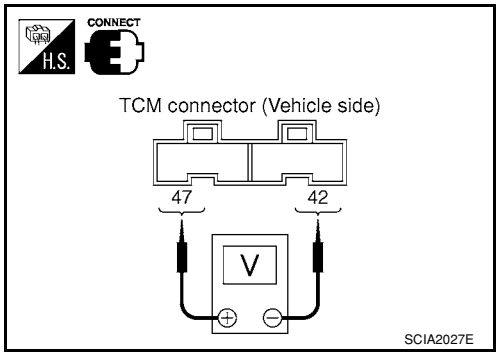

3. Turn ignition switch OFF.
4. Disconnect TCM connector.
5. Check if there is continuity between connector terminal and ground.

OK or NG

OK >> GO TO 5.
NG >> GO TO 2.

2. CHECK CVT FLUID TEMPERATURE SENSOR CIRCUIT

1. Turn ignition switch OFF.
2. Disconnect the TCM connector.
3. Check resistance between TCM connector terminals.

Name	Connector	Terminal	Temperature °C (°F)	Resistance (Approx.)
CVT fluid temperature sensor	E32	47 - 42	20 (68)	6.5 kΩ
			80 (176)	0.9 kΩ

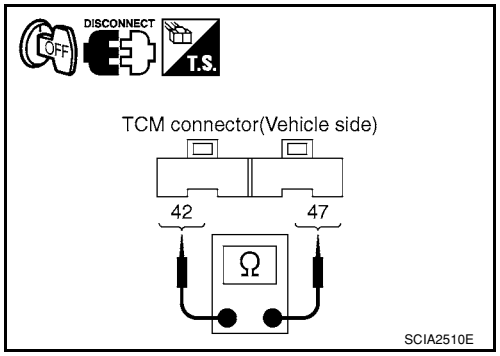

OK or NG

OK >> GO TO 5.
NG >> GO TO 3.

3. CHECK CVT FLUID TEMPERATURE SENSOR

1. Turn ignition switch OFF.
2. Disconnect CVT unit harness connector.

3. Check resistance between CVT unit harness connector terminals.

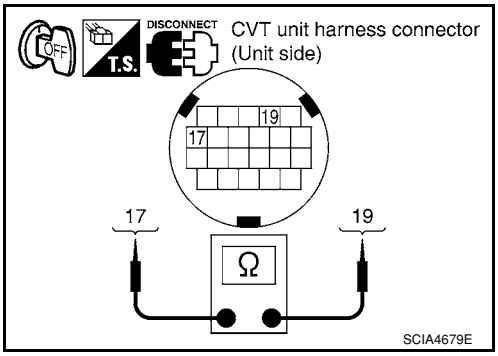

Name	Connector	Terminal	Temperature °C (°F)	Resistance (Approx.)
CVT fluid temperature sensor	F46	17 - 19	20 (68)	6.5 kΩ
			80 (176)	0.9 kΩ

4. Reinstall any part removed.

OK or NG

OK >> GO TO 4.
NG >> Replace the transaxle assembly. Refer to CVT-178, "Removal and Installation".

4. CHECK HARNESS BETWEEN TCM AND CVT FLUID TEMPERATURE SENSOR

1. Turn ignition switch OFF.
2. Disconnect the TCM connector and CVT unit harness connector.
3. Check continuity between TCM connector terminals and CVT unit harness connector terminals.

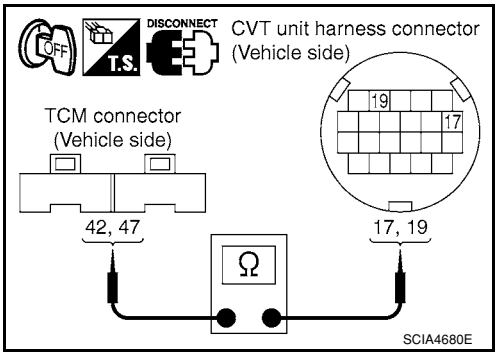

Item	Connector	Terminal	Continuity
TCM	E32	42	Yes
CVT unit harness connector	F46	19	
TCM	E32	47	Yes
CVT unit harness connector	F46	17	

4. If OK, check harness for short to ground and short to power.
5. Reinstall any part removed.

OK or NG

OK >> GO TO 5.
NG >> Repair or replace damaged parts.

5. CHECK DTC

Perform CVT-71, "DTC Confirmation Procedure" .

OK or NG

OK >> **INSPECTION END**
NG >> GO TO 6.

6. CHECK TCM

1. Check TCM input/output signals. Refer to CVT-45, "TCM Terminal and Reference Value" .
2. If NG, re-check TCM pin terminals for damage or loose connection with harness connector.

OK or NG

OK >> **INSPECTION END**
NG >> Repair or replace damaged parts.

Component Inspection

INFOID:0000000001703504

CVT FLUID TEMPERATURE SENSOR

1. Turn ignition switch OFF.
2. Disconnect CVT unit harness connector.

3. Check resistance between CVT unit harness connector terminals.

Name	Connector	Terminal	Temperature °C (°F)	Resistance (Approx.)
CVT fluid temperature sensor	F46	17 - 19	20 (68)	6.5 kΩ
			80 (176)	0.9 kΩ

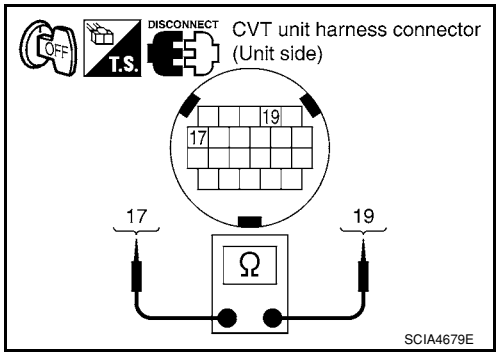

4. If NG, replace the transaxle assembly. Refer to CVT-178, "Removal and Installation" .

DTC P0715 INPUT SPEED SENSOR CIRCUIT (PRI SPEED SENSOR)

Description

INFOID:0000000001703505

- The input speed sensor (primary speed sensor) is included in the control valve assembly.
- The input speed sensor (primary speed sensor) detects the primary pulley revolution speed and sends a signal to the TCM.

CONSULT-III Reference Value in Data Monitor Mode

INFOID:0000000001703506

Remarks: Specification data are reference values.

Item name	Condition	Display value
ENG SPEED SIG	Engine running	Closely matches the tachometer reading.
PRI SPEED SEN	During driving (lock-up ON)	Approximately matches the engine speed.

On Board Diagnosis Logic

INFOID:0000000001703507

- This is an OBD-II self-diagnostic item.
- Diagnostic trouble code “P0715 INPUT SPD SEN/CIRC” with CONSULT-III is detected when TCM does not receive the proper signal from the sensor.

Possible Cause

INFOID:0000000001703508

- Harness or connectors
  (Sensor circuit is open or shorted.)
- Input speed sensor (Primary speed sensor)

DTC Confirmation Procedure

INFOID:0000000001703509

CAUTION:
Always drive vehicle at a safe speed.
NOTE:
If “DTC Confirmation Procedure” has been previously performed, always turn ignition switch OFF and wait at least 10 seconds before performing the next test.
After the repair, touch “ERASE” on “SELF-DIAG RESULTS” and then perform the following procedure to confirm the malfunction is eliminated.

WITH CONSULT-III

1. Turn ignition switch ON and select “DATA MONITOR” mode for “TRANSMISSION” with CONSULT-III.
2. Start engine and maintain the following conditions for at least 5 consecutive seconds.
   VEHICLE SPEED: 10 km/h (6 MPH) or more
   ACC PEDAL OPEN: More than 1.0/8
   RANGE: “D” position
   ENG SPEED: 450 rpm or more
   Driving location: Driving the vehicle uphill (increased engine load) will help maintain the driving conditions required for this test.
3. If DTC is detected, go to CVT-78, "Diagnosis Procedure" .

WITH GST

Follow the procedure “WITH CONSULT-III”.

Wiring Diagram - CVT - PRSCVT

INFOID:0000000001703510

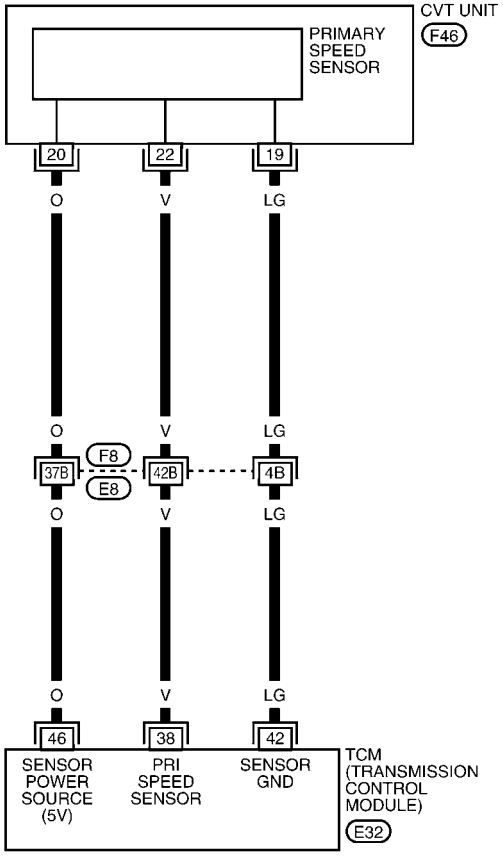

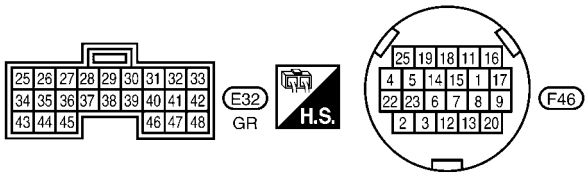

REFER TO THE FOLLOWING.
F8 - SUPER MULTIPLE JUNCTION (SMJ)

BCWA0672E

TCM TERMINALS AND REFERENCE VALUES

Refer to CVT-45, "TCM Terminal and Reference Value".

Diagnosis Procedure

INFOID:0000000001703511

1. CHECK INPUT SIGNALS

With CONSULT-III

1. Start engine.
2. Select “ECU INPUT SIGNALS” in “DATA MONITOR” mode for “TRANSMISSION” with CONSULT-III.
3. Start vehicle and read out the value of “PRI SPEED SEN”.

Item name	Condition	Display value
PRI SPEED SEN	During driving (lock-up ON)	Approximately matches the engine speed.

OK or NG

OK >> GO TO 6.
NG >> GO TO 2.

2. CHECK INPUT SPEED SENSOR (PRIMARY SPEED SENSOR)

1. Start engine.
2. Check voltage between TCM connector terminals.

Item	Connector	Terminal	Data (Approx.)
TCM	E32	46 - 42	5.0 V

3. Check the pulse with CONSULT-III or oscilloscope, when vehicle cruises.

Name	Condition
Input speed sensor (Primary speed sensor)	When running at 20 km/h (12 MPH) in “L” position with the closed throttle position signal OFF, use the CONSULT-III pulse frequency measuring function. **CAUTION:** **Connect the data link connector to the vehicle-side diagnosis connector.**

Item	Connector	Terminal	Name	Data (Approx.)
TCM	E32	38	Input speed sensor (Primary speed sensor)	1000 Hz

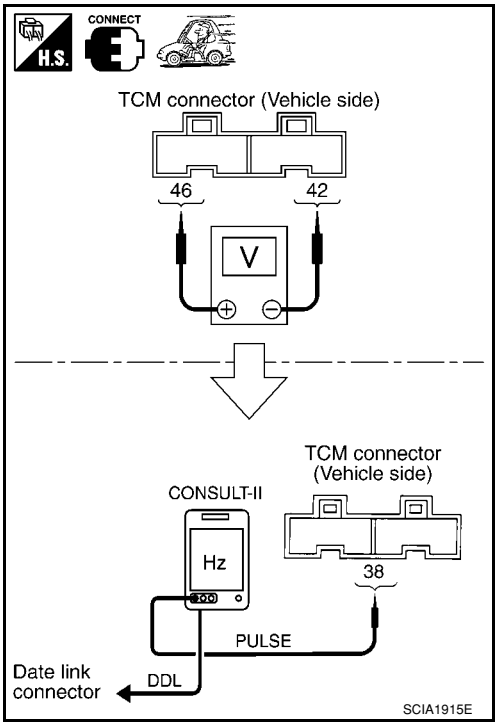

OK or NG

OK >> GO TO 6.
NG - 1 >> Battery voltage is not supplied: GO TO 3.
NG - 2 >> Battery voltage is supplied, but there is a malfunction in the frequency: GO TO 4.

3. CHECK HARNESS BETWEEN TCM AND CVT UNIT HARNESS CONNECTOR (SENSOR POWER AND SENSOR GROUND)

1. Turn ignition switch OFF.
2. Disconnect TCM connector and CVT unit harness connector.

3. Check continuity between TCM connector terminals and CVT unit harness connector terminals.

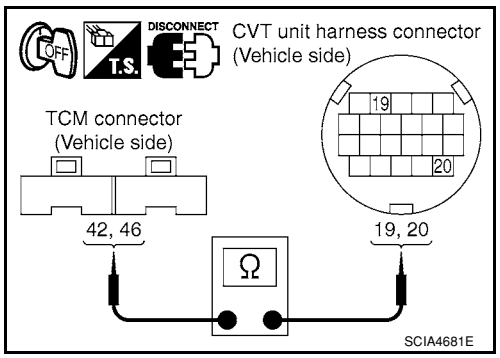

Item	Connector	Terminal	Continuity
TCM	E32	42	Yes
CVT unit harness connector	F46	19	
TCM	E32	46	Yes
CVT unit harness connector	F46	20	

4. If OK, check harness for short to ground and short to power.
5. Reinstall any part removed.

OK or NG

OK >> GO TO 6.
NG >> Repair open circuit or short to ground or short to power in harness or connectors.

4. CHECK HARNESS BETWEEN TCM AND CVT UNIT HARNESS CONNECTOR [INPUT SPEED SENSOR (PRIMARY SPEED SENSOR)]

1. Turn ignition switch OFF.
2. Disconnect TCM connector and CVT unit harness connector.
3. Check continuity between TCM connector terminal and CVT unit harness connector terminal.

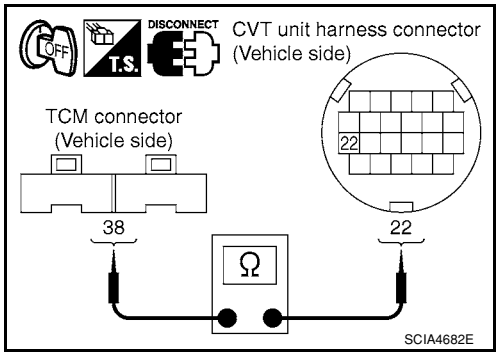

Item	Connector	Terminal	Continuity
TCM	E32	38	Yes
CVT unit harness connector	F46	22	

4. If OK, check harness for short to ground and short to power.
5. Reinstall any part removed.

OK or NG

OK >> GO TO 5.
NG >> Repair open circuit or short to ground or short to power in harness or connectors.

5. CHECK THE TCM SHORT

Replace same type TCM, perform self-diagnosis check. Erase self-diagnostic results and then drive the vehicle [10 km/h (6 MPH) or more], perform self-diagnosis check. Refer to CVT-76, "DTC Confirmation Procedure" .

Is the “P0715 INPUT SPD SEN/CIRC” detected again?

YES >> Replace the transaxle assembly. Refer to CVT-178, "Removal and Installation" .
NO >> Replace TCM. Refer to CVT-8, "Service After Replacing TCM and Transaxle Assembly" .

6. CHECK DTC

Perform CVT-76, "DTC Confirmation Procedure" .

OK or NG

OK >> **INSPECTION END**
NG >> GO TO 7.

7. CHECK TCM

1. Check TCM input/output signals. Refer to CVT-45, "TCM Terminal and Reference Value" .
2. If NG, re-check TCM pin terminals for damage or loose connection with harness connector.

OK or NG

OK >> **INSPECTION END**
NG >> Repair or replace damaged parts.

DTC P0720 VEHICLE SPEED SENSOR CVT (SECONDARY SPEED SENSOR)

Description

INFOID:0000000001703512

The vehicle speed sensor CVT [output speed sensor (secondary speed sensor)] detects the revolution of the CVT output shaft and emits a pulse signal. The pulse signal is sent to the TCM, which converts it into vehicle speed.

CONSULT-III Reference Value in Data Monitor Mode

INFOID:0000000001703513

Remarks: Specification data are reference values.

Item name	Condition	Display value
VSP SENSOR	During driving	Approximately matches the speedometer reading.

On Board Diagnosis Logic

INFOID:0000000001703514

- This is an OBD-II self-diagnostic item.
- Diagnostic trouble code “P0720 VEH SPD SEN/CIR AT” with CONSULT-III is detected TCM does not receive the proper signal from the sensor.

Possible Cause

INFOID:0000000001703515

- Harness or connectors
  (Sensor circuit is open or shorted.)
- Output speed sensor (Secondary speed sensor)

DTC Confirmation Procedure

INFOID:0000000001703516

CAUTION:
Always drive vehicle at a safe speed.
NOTE:
If “DTC Confirmation Procedure” has been previously performed, always turn ignition switch OFF and wait at least 10 seconds before performing the next test.
After the repair, touch “ERASE” on “SELF-DIAG RESULTS” and then perform the following procedure to confirm the malfunction is eliminated.

WITH CONSULT-III

1. Turn ignition switch ON and select “DATA MONITOR” mode for “TRANSMISSION” with CONSULT-III.
2. Start engine and maintain the following conditions for at least 12 consecutive seconds.
   ACC PEDAL OPEN: More than 1.0/8
   RANGE: “D” position
   Driving location: Driving the vehicle uphill (increased engine load) will help maintain the driving conditions required for this test.
3. If DTC is detected, go to CVT-82, "Diagnosis Procedure" .

WITH GST

Follow the procedure “WITH CONSULT-III”.

Wiring Diagram - CVT - SESCVT

INFOID:0000000001703517

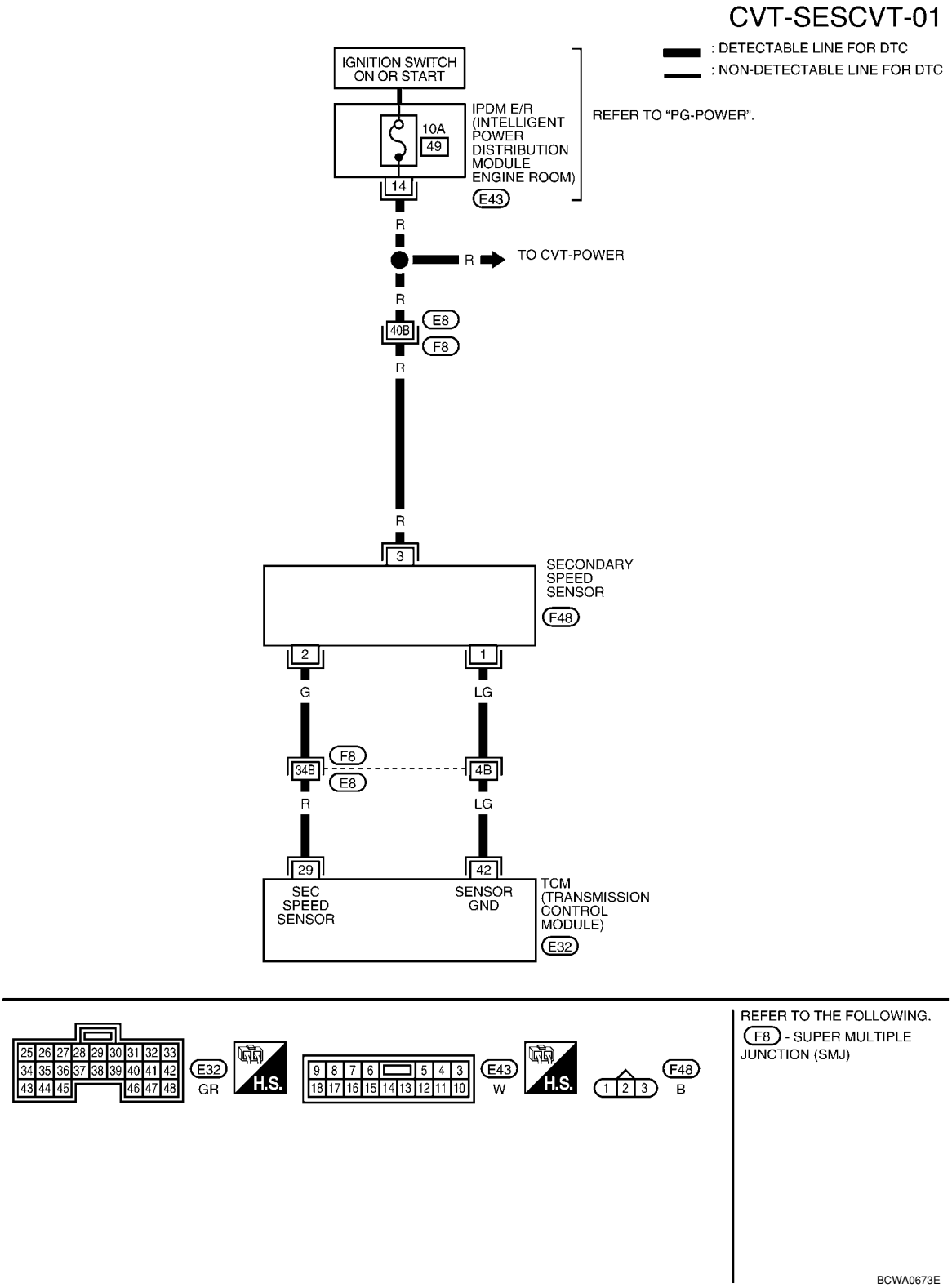

TCM TERMINALS AND REFERENCE VALUES

Refer to CVT-45, "TCM Terminal and Reference Value" .

Diagnosis Procedure

INFOID:0000000001703518

1. CHECK INPUT SIGNAL

With CONSULT-III

1. Start engine.
2. Select “ECU INPUT SIGNALS” in “DATA MONITOR” mode for “TRANSMISSION” with CONSULT-III.
3. Start vehicle and read out the value of “VSP SENSOR”.

Item name	Condition	Display value
VSP SENSOR	During driving	Approximately matches the speedometer reading.

OK or NG

OK >> GO TO 8.
NG >> GO TO 2.

2. CHECK SECONDARY SPEED SENSOR

With CONSULT-III

1. Start engine.
2. Check power supply to output speed sensor (secondary speed sensor) by voltage between TCM connector terminals 10, 19 and 42. Refer to CVT-36, "Circuit Diagram" .

Item	Connector	Terminal	Data (Approx.)
TCM	E31, E32	10 - 42	Battery voltage
		19 - 42	

3. If OK, check the pulse when vehicle cruises.

Name	Condition
Output speed sensor (Secondary speed sensor)	When running at 20 km/h (12 MPH) in “D” position, use the CONSULT-III pulse frequency measuring function. **CAUTION:** **Connect the data link connector to the vehicle-side diagnosis connector.**

Item	Connector	Terminal	Name	Data (Approx.)
TCM	E32	29	Output speed sensor (Secondary speed sensor)	570 Hz

OK or NG

OK >> GO TO 8.
NG >> GO TO 3.

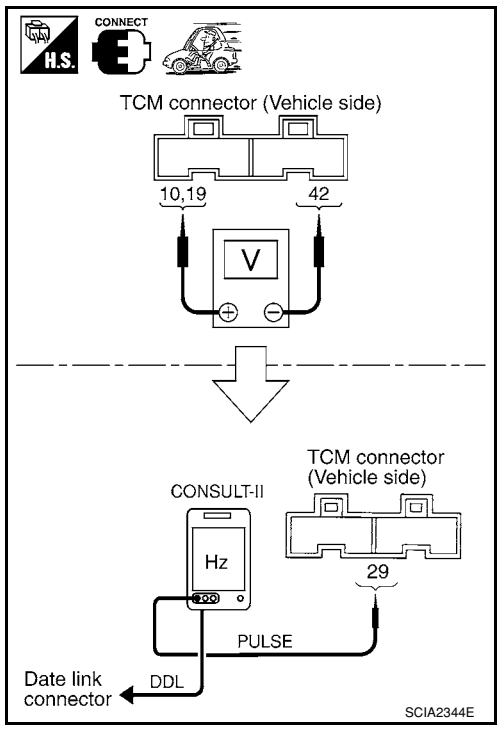

3. CHECK POWER AND SENSOR GROUND

1. Turn ignition switch OFF.
2. Disconnect the output speed sensor (secondary speed sensor) harness connector.
3. Turn ignition switch ON.

4. Check voltage between output speed sensor (secondary speed sensor) harness connector terminals.

Item	Connector	Terminal	Data (Approx.)
Output speed sensor (Secondary speed sensor)	F48	3 - 1	Battery voltage

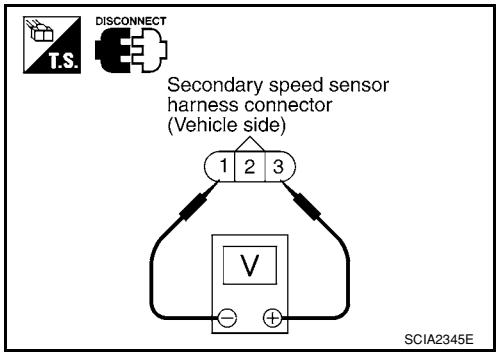

5. Check voltage between output speed sensor (secondary speed sensor) harness connector terminal and ground.

Item	Connector	Terminal	Data (Approx.)
Output speed sensor (Secondary speed sensor)	F48	3 - ground	Battery voltage

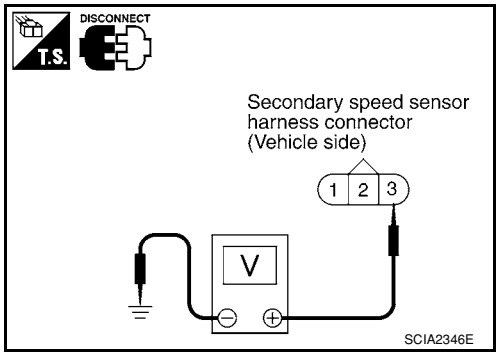

6. If OK, check harness for short to ground and short to power.
7. Reinstall any part removed.

OK or NG

OK >> GO TO 4.
NG - 1 >> Battery voltage is not supplied between terminals 1 and 3, terminals 1 and ground.: GO TO 6.
NG - 2 >> Battery voltage is not supplied between terminals 1 and 3 only.: GO TO 7.

4. CHECK HARNESS BETWEEN TCM AND OUTPUT SPEED SENSOR (SECONDARY SPEED SENSOR)

1. Turn ignition switch OFF.
2. Disconnect TCM connector and output speed sensor (secondary speed sensor) harness connector.
3. Check continuity between TCM connector terminal and output speed sensor (secondary speed sensor) harness connector terminal.

Item	Connector	Terminal	Continuity
TCM	E32	29	Yes
Output speed sensor (Secondary speed sensor)	F48	2	

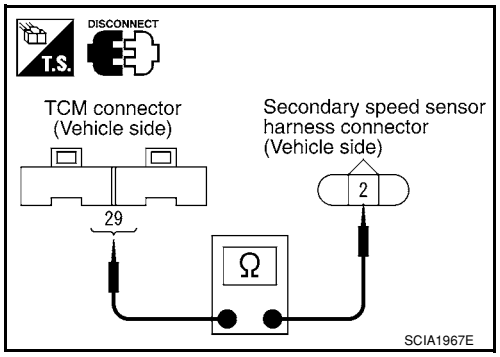

4. If OK, check harness for short to ground and short to power.
5. Reinstall any part removed.

OK or NG

OK >> GO TO 5.
NG >> Repair open circuit or short to ground or short to power in harness or connectors.

5. CHECK THE TCM SHORT

Replace same type TCM, perform self-diagnosis check. Erase self-diagnostic results and them drive the vehicle [more than 40 km/h (25 MPH)], perform self-diagnosis check. Refer to CVT-80, "DTC Confirmation Procedure" .

Is “P0720 VEH SPD SEN/CIR AT” detected again?

YES >> Replace the transaxle assembly. Refer to CVT-178, "Removal and Installation" .
NO >> Replace TCM. Refer to CVT-8, "Service After Replacing TCM and Transaxle Assembly" .

6. CHECK HARNESS BETWEEN TCM AND OUTPUT SPEED SENSOR (SECONDARY SPEED SENSOR) (POWER)

1. Turn ignition switch OFF.
2. Disconnect TCM connector and output speed sensor (secondary speed sensor) harness connector.

3. Check continuity between TCM connector terminals and output speed sensor (secondary speed sensor) harness connector terminal. Refer to CVT-36, "Circuit Diagram" .

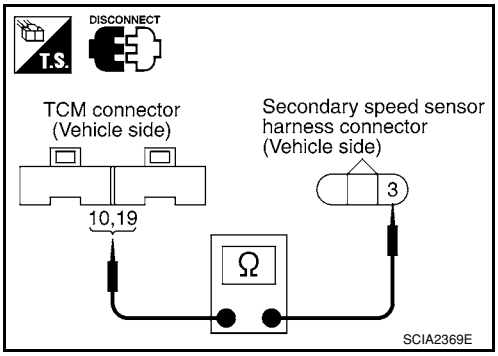

Item	Connector	Terminal	Continuity
TCM	E31	10	Yes
Output speed sensor (Secondary speed sensor)	F48	3	
TCM	E31	19	Yes
Output speed sensor (Secondary speed sensor)	F48	3	

4. If OK, check harness for short to ground and short to power.
5. Reinstall any part removed.

OK or NG

OK >> 10 A fuse (No. 49, located in the IPDM E/R) or ignition switch are malfunctioning.
NG >> Repair open circuit or short to ground or short to power in harness or connectors.

7. CHECK HARNESS BETWEEN TCM AND OUTPUT SPEED SENSOR (SECONDARY SPEED SENSOR) (SENSOR GROUND)

1. Turn ignition switch OFF.
2. Disconnect TCM connector and output speed sensor (secondary speed sensor) harness connector.
3. Check continuity between TCM connector terminal and output speed sensor (secondary speed sensor) harness connector terminal.

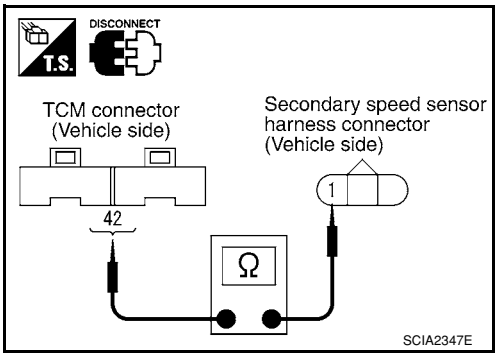

Item	Connector	Terminal	Continuity
TCM	E32	42	Yes
Output speed sensor (Secondary speed sensor)	F48	1	

4. If OK, check harness for short to ground and short to power.
5. Reinstall any part removed.

OK or NG

OK >> GO TO 8.
NG >> Repair open circuit or short to ground or short to power in harness or connectors.

8. CHECK DTC

Perform CVT-80, "DTC Confirmation Procedure" .

OK or NG

OK >> **INSPECTION END**
NG >> GO TO 9.

9. CHECK TCM

1. Check TCM input/output signals. Refer to CVT-45, "TCM Terminal and Reference Value" .
2. If NG, re-check TCM pin terminals for damage or loose connection with harness connector.

OK or NG

OK >> **INSPECTION END**
NG >> Repair or replace damaged parts.

DTC P0725 ENGINE SPEED SIGNAL

Description

INFOID:0000000001703519

The engine speed signal is sent from the ECM to the TCM.

CONSULT-III Reference Value in Data Monitor Mode

INFOID:0000000001703520

Remarks: Specification data are reference values.

Item name	Condition	Display value
ENG SPEED SIG	Engine running	Closely matches the tachometer reading.
ACC PEDAL OPEN	Released accelerator pedal - Fully depressed accelerator pedal	0.0/8 - 8.0/8

On Board Diagnosis Logic

INFOID:0000000001703521

- This is not an OBD-II self-diagnostic item.
- Diagnostic trouble code “P0725 ENGINE SPEED SIG” with CONSULT-III is detected when TCM does not receive the engine speed signal (input by CAN communication) from ECM.

Possible Cause

INFOID:0000000001703522

Harness or connectors
(The ECM to the TCM circuit is open or shorted.)

DTC Confirmation Procedure

INFOID:0000000001703523

CAUTION:
Always drive vehicle at a safe speed.
NOTE:
If “DTC Confirmation Procedure” has been previously performed, always turn ignition switch OFF and wait at least 10 seconds before performing the next test.
After the repair, touch “ERASE” on “SELF-DIAG RESULTS” and then perform the following procedure to confirm the malfunction is eliminated.

WITH CONSULT-III

1. Turn ignition switch ON and select “DATA MONITOR” mode for “TRANSMISSION” with CONSULT-III.
2. Start engine and maintain the following conditions for at least 10 consecutive seconds.
   PRI SPEED SEN: More than 1000 rpm
3. If DTC is detected, go to CVT-85, "Diagnosis Procedure".

Diagnosis Procedure

INFOID:0000000001703524

1. CHECK DTC WITH ECM

With CONSULT-III

1. Turn ignition switch ON. (Do not start engine.)
2. Select “SELF-DIAG RESULTS” mode for “ENGINE” with CONSULT-III. Refer to EC-109, "CONSULT-II Function (ENGINE)".

OK or NG

OK >> GO TO 2.
NG >> Check the DTC detected item. Refer to EC-109, "CONSULT-II Function (ENGINE)".

2. CHECK DTC WITH TCM

With CONSULT-III

1. Turn ignition switch ON. (Do not start engine.)
2. Select “SELF-DIAG RESULTS” mode for “TRANSMISSION” with CONSULT-III. Refer to CVT-47, "CONSULT-III Function (TRANSMISSION)".

OK or NG

OK >> GO TO 3.
NG >> Check the DTC detected item. Refer to CVT-47, "CONSULT-III Function (TRANSMISSION)".

- If DTC of CAN communication line is detected, go to CVT-56.

3. CHECK INPUT SIGNALS

With CONSULT-III

1. Start engine.
2. Select “ECU INPUT SIGNALS” in “DATA MONITOR” mode for “TRANSMISSION” with CONSULT-III.
3. While monitoring “ENG SPEED SIG”, check for engine speed change corresponding to “ACC PEDAL OPEN”.

Item name	Condition	Display value
ENG SPEED SIG	Engine running	Closely matches the tachometer reading.
ACC PEDAL OPEN	Released accelerator pedal - Fully depressed accelerator pedal	0.0/8 - 8.0/8

OK or NG

OK >> GO TO 4.
NG >> Check ignition signal circuit. Refer to EC-531.

4. CHECK DTC

Perform CVT-85, "DTC Confirmation Procedure".

OK or NG

OK >> **INSPECTION END**
NG >> GO TO 5.

5. CHECK TCM

1. Check TCM input/output signals. Refer to CVT-45, "TCM Terminal and Reference Value".
2. If NG, re-check TCM pin terminals for damage or loose connection with harness connector.

OK or NG

OK >> **INSPECTION END**
NG >> Repair or replace damaged parts.

DTC P0730 BELT DAMAGE

Description

INFOID:0000000001703525

TCM selects the gear ratio using the engine load (throttle position), the primary pulley revolution speed, and the secondary pulley revolution speed as input signal. Then it changes the operating pressure of the primary pulley and the secondary pulley and changes the groove width of the pulley.

CONSULT-III Reference Value in Data Monitor Mode

INFOID:0000000001703526

Remarks: Specification data are reference values.

Item name	Condition	Display value (Approx.)
GEAR RATIO	During driving	2.56 - 0.43

On Board Diagnosis Logic

INFOID:0000000001703527

- This is not an OBD-II self-diagnostic item.
- TCM calculates the actual gear ratio with input speed sensor (primary speed sensor) and output speed sensor (secondary speed sensor).
- Diagnostic trouble code “P0730 BELT DAMG” with CONSULT-III is detected, when TCM receives an unexpected gear ratio signal.

Possible Cause

INFOID:0000000001703528

Transaxle assembly

DTC Confirmation Procedure

INFOID:0000000001703529

CAUTION:
Always drive vehicle at a safe speed.
NOTE:
If “DTC Confirmation Procedure” has been previously performed, always turn ignition switch OFF and wait at least 10 seconds before performing the next test.
After the repair, perform the following procedure to confirm the malfunction is eliminated.

WITH CONSULT-III

1. Turn ignition switch ON and select “DATA MONITOR” mode for “TRANSMISSION” with CONSULT-III.
2. Make sure that output voltage of CVT fluid temperature sensor is within the range below.
   ATF TEMP SEN: 1.0 - 2.0 V
   If out of range, drive the vehicle to decrease the voltage (warm up the fluid) or stop engine to increase the voltage (cool down the fluid)
3. Select “DATA MONITOR” mode for “TRANSMISSION” with CONSULT-III.
4. Start engine and maintain the following conditions for at least 30 consecutive seconds.
   TEST START FROM 0 km/h (0 MPH)
   CONSTANT ACCELERATION: Keep 30 sec or more
   VEHICLE SPEED: 10 km/h (6 MPH) or more
   ACC PEDAL OPEN: More than 1.0/8
   RANGE: “D” position
   ENG SPEED: 450 rpm or more
5. If DTC is detected, go to CVT-87, "Diagnosis Procedure".

Diagnosis Procedure

INFOID:0000000001703530

1.CHECK DTC

Perform CVT-87, "DTC Confirmation Procedure".

Are any DTC displayed?

YES - 1>> DTC except for “P0730 BELT DAMG” is displayed: Go to Check the DTC detected item. Refer to CVT-47, "CONSULT-III Function (TRANSMISSION)".
YES - 2>> DTC for “P0730 BELT DAMG” is displayed: Replace the transaxle assembly. Refer to CVT-178, "Removal and Installation".
NO >> **INSPECTION END**

DTC P0740 TORQUE CONVERTER CLUTCH SOLENOID VALVE

Description

INFOID:0000000001703531

- The torque converter clutch solenoid valve is included in the control valve assembly.
- The torque converter clutch solenoid valve is activated by the TCM in response to signals sent from the vehicle speed and accelerator pedal position sensors. Lock-up piston operation will then be controlled.
- Lock-up operation, however, is prohibited when CVT fluid temperature is too low.
- When the accelerator pedal is depressed (less than 2.0/8) in lock-up condition, the engine speed should not change abruptly. If there is a big jump in engine speed, there is no lock-up.

CONSULT-III Reference Value in Data Monitor Mode

INFOID:0000000001703532

Remarks: Specification data are reference values.

Item name	Condition	Display value (Approx.)
ISOLT1	Lock-up OFF	0.0 A
	Lock-up ON	0.7 A

On Board Diagnosis Logic

INFOID:0000000001703533

- This is an OBD-II self-diagnostic item.
- Diagnostic trouble code “P0740 TCC SOLENOID/CIRC” with CONSULT-III is detected under the following conditions.
- TCM detects an improper voltage drop when it tries to operate the solenoid valve.

Possible Cause

INFOID:0000000001703534

- Torque converter clutch solenoid valve
- Harness or connectors
  (Solenoid circuit is open or shorted.)

DTC Confirmation Procedure

INFOID:0000000001703535

NOTE:
If “DTC Confirmation Procedure” has been previously performed, always turn ignition switch OFF and wait at least 10 seconds before performing the next test.
After the repair, touch “ERASE” on “SELF-DIAG RESULTS” and then perform the following procedure to confirm the malfunction is eliminated.

WITH CONSULT-III

1. Turn ignition switch ON. (Do not start engine.)
2. Select “DATA MONITOR” mode for “TRANSMISSION” with CONSULT-III and wait at least 10 consecutive seconds.
3. If DTC is detected, go to CVT-90, "Diagnosis Procedure" .

WITH GST

Follow the procedure “WITH CONSULT-III”.

Wiring Diagram - CVT - TCV

INFOID:0000000001703536

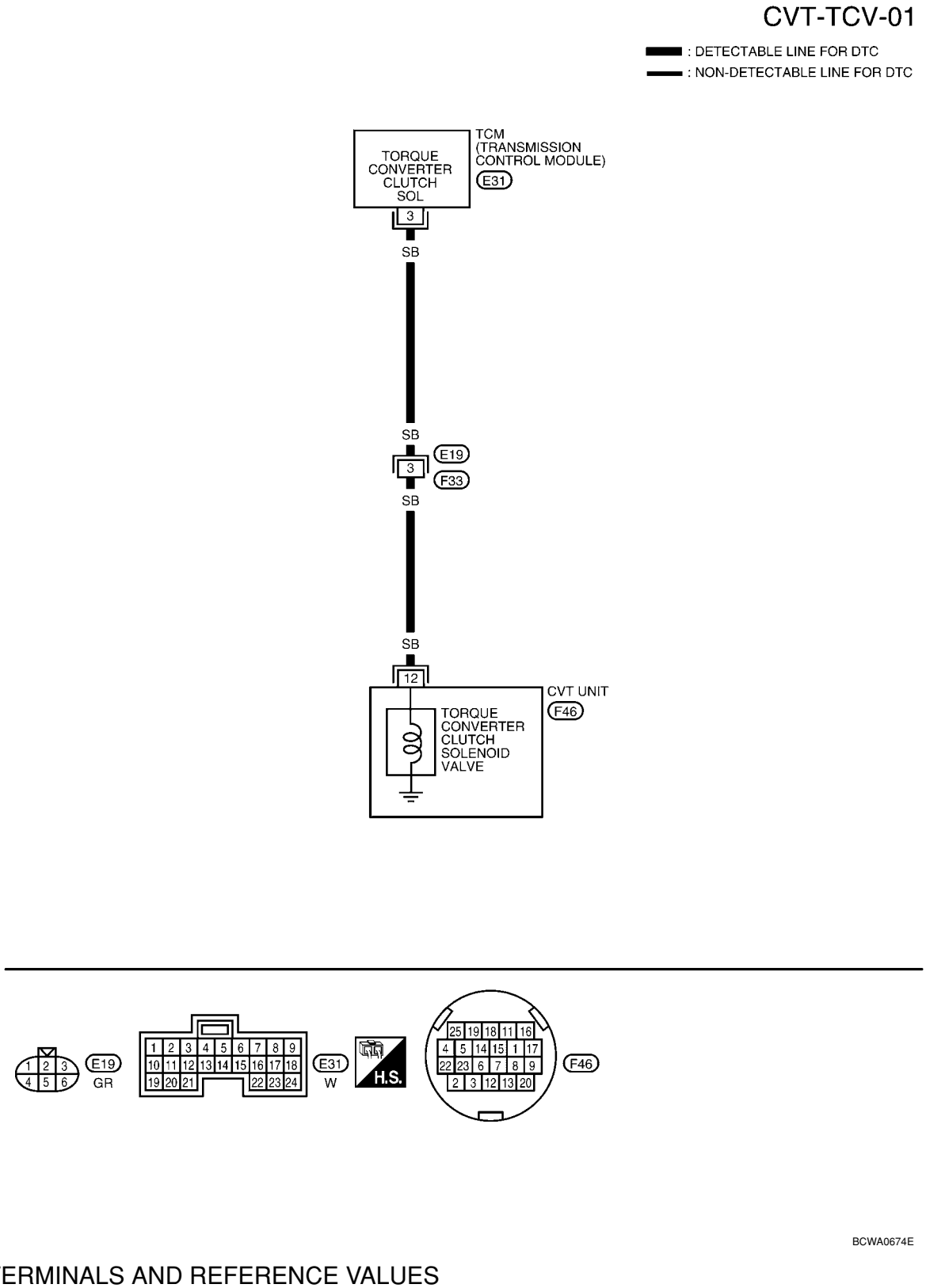

TCM TERMINALS AND REFERENCE VALUES

Refer to CVT-45, "TCM Terminal and Reference Value" .

Diagnosis Procedure

INFOID:0000000001703537

1. CHECK INPUT SIGNAL

With CONSULT-III

1. Start engine.
2. Select “MAIN SIGNALS” in “DATA MONITOR” mode for “TRANSMISSION” with CONSULT-III.
3. Start vehicle and read out the value of “ISOLT1”.

Item name	Condition	Display value (Approx.)
ISOLT1	Lock-up OFF	0.0 A
	Lock-up ON	0.7 A

Without CONSULT-III

1. Start engine.
2. Check voltage between TCM connector terminal and ground.

Name	Connector	Terminal	Condition		Voltage (Approx.)
Torque converter clutch solenoid valve	E31	3 - ground	When vehicle cruises in “D” position	Lock-up ON	6.0 V
				Lock-up OFF	1.0 V

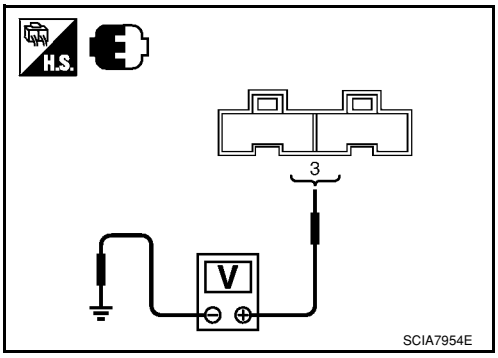

3. Turn ignition switch OFF.
4. Disconnect TCM connector.
5. Check if there is continuity between the connector terminal and ground.

OK or NG

OK >> GO TO 5.
NG >> GO TO 2.

2. CHECK TORQUE CONVERTER CLUTCH SOLENOID VALVE CIRCUIT

1. Turn ignition switch OFF.
2. Disconnect TCM connector.
3. Check resistance between TCM connector terminal and ground.

Solenoid valve	Connector	Terminal	Resistance (Approx.)
Torque converter clutch solenoid valve	E31	3 - Ground	3 - 9 Ω

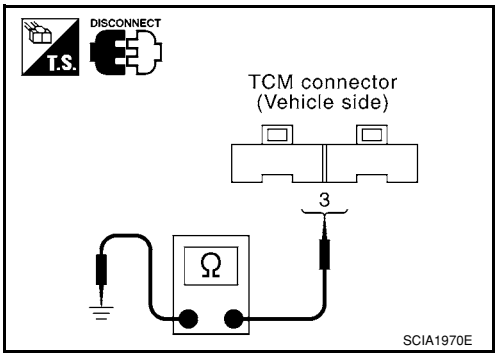

OK or NG

OK >> GO TO 5.
NG >> GO TO 3.

3. CHECK HARNESS BETWEEN TCM AND TORQUE CONVERTER CLUTCH SOLENOID VALVE

1. Turn ignition switch OFF.
2. Disconnect TCM connector and CVT unit harness connector.

3. Check continuity between TCM connector terminal and CVT unit harness connector terminal.

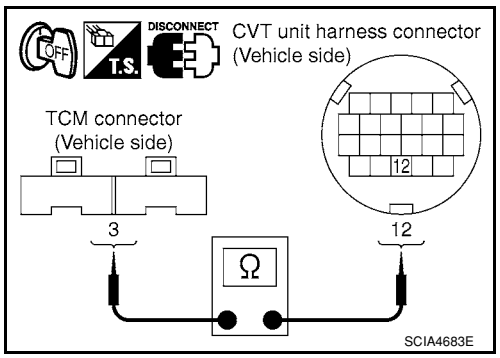

Item	Connector	Terminal	Continuity
TCM	E31	3	Yes
CVT unit harness connector	F46	12	

4. If OK, check harness for short to ground and short to power.
5. If OK, check continuity between ground and CVT assembly.
6. Reinstall any part removed.

OK or NG

OK >> GO TO 4.
NG >> Repair or replace damaged parts.

4. CHECK VALVE RESISTANCE

1. Turn ignition switch OFF.
2. Disconnect CVT unit harness connector.
3. Check resistance between CVT unit harness connector terminal and ground.

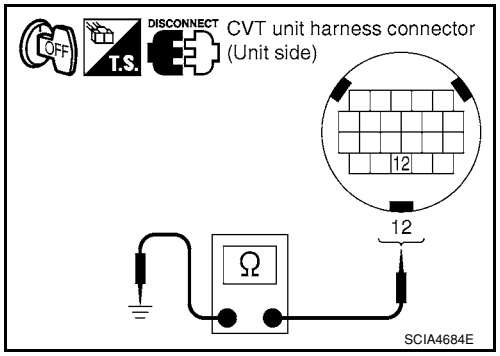

Solenoid Valve	Connector	Terminal	Resistance (Approx.)
Torque converter clutch solenoid valve	F46	12 - Ground	3 - 9 Ω

OK or NG

OK >> GO TO 5.
NG >> Repair or replace damaged parts.

5. CHECK DTC

Perform CVT-88, "DTC Confirmation Procedure" .

OK or NG

OK >> **INSPECTION END**
NG >> GO TO 6.

6. CHECK TCM

1. Check TCM input/output signals. Refer to CVT-45, "TCM Terminal and Reference Value" .
2. If NG, re-check TCM pin terminals for damage or loose connection with harness connector.

OK or NG

OK >> **INSPECTION END**
NG >> Repair or replace damaged parts.

Component Inspection

INFOID:0000000001703538

TORQUE CONVERTER CLUTCH SOLENOID VALVE

1. Turn ignition switch OFF.
2. Disconnect CVT unit harness connector.

3. Check resistance between CVT unit harness connector terminal and ground.

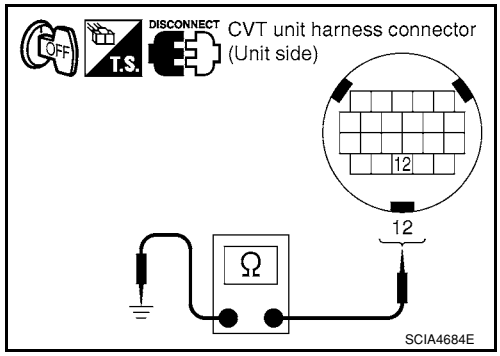

Solenoid Valve	Connector	Terminal	Resistance (Approx.)
Torque converter clutch solenoid valve	F46	12 - Ground	3 - 9 Ω

4. If NG, replace the transaxle assembly. Refer to CVT-178, "Removal and Installation" .

DTC P0744 A/T TCC S/V FUNCTION (LOCK-UP)

Description

INFOID:0000000001703539

- The torque converter clutch solenoid valve is included in the control valve assembly.
- This malfunction is detected when the torque converter clutch does not lock-up as instructed by the TCM. This is not only caused by electrical malfunction (circuits open or shorted), but also by mechanical malfunction such as control valve sticking, improper solenoid valve operation, etc.

CONSULT-III Reference Value in Data Monitor Mode

INFOID:0000000001703540

Remarks: Specification data are reference values.

Item name	Condition	Display value
ENG SPEED SIG	Engine running	Closely matches the tachometer reading.
PRI SPEED SEN	During driving (lock-up ON)	Approximately matches the engine speed.

On Board Diagnosis Logic

INFOID:0000000001703541

- This is an OBD-II self-diagnostic item.
- Diagnostic trouble code “P0744 A/T TCC S/V FNCTN” with CONSULT-III is detected under the following conditions.
- When CVT cannot perform lock-up even if electrical circuit is good.
- When TCM compares difference value with slip revolution and detects an irregularity.

Possible Cause

INFOID:0000000001703542

- Torque converter clutch solenoid valve
- Hydraulic control circuit

DTC Confirmation Procedure

INFOID:0000000001703543

CAUTION:
Always drive vehicle at a safe speed.
NOTE:
If “DTC Confirmation Procedure” has been previously performed, always turn ignition switch OFF and wait at least 10 seconds before performing the next test.
After the repair, touch “ERASE” on “SELF-DIAG RESULTS” and then perform the following procedure to confirm the malfunction is eliminated.

WITH CONSULT-III

1. Turn ignition switch ON. (Do not start engine.)
2. Select “DATA MONITOR” mode for “TRANSMISSION” with CONSULT-III.
3. Start engine and maintain the following condition for at least 30 seconds.
   ACC PEDAL OPEN: More than 1.0/8
   RANGE: “D” position
   [Vehicle speed: Constant speed of more than 40 km/h (25 MPH)]
4. If DTC is detected go to CVT-93, "Diagnosis Procedure".

WITH GST

Follow the procedure “WITH CONSULT-III”.

Diagnosis Procedure

INFOID:0000000001703544

1.CHECK INPUT SIGNALS

With CONSULT-III

1. Start engine.
2. Select “ECU INPUT SIGNALS” in “DATA MONITOR” mode for “TRANSMISSION” with CONSULT-III.
3. Start vehicle.
4. Check if there is a great difference between “ENG SPEED SIG” and “PRI SPEED SEN”. (Lock-up ON.)

Item name	Condition	Display value
ENG SPEED SIG	Engine running	Closely matches the tachometer reading.
PRI SPEED SEN	During driving (lock-up ON)	Approximately matches the engine speed.

OK or NG

OK >> GO TO 5.
NG >> GO TO 2.

2. CHECK LINE PRESSURE

Perform line pressure test. Refer to CVT-36, "Inspections before Trouble Diagnosis".

OK or NG

OK >> GO TO 3.
NG >> Repair or replace damaged parts. Refer to CVT-36, "Inspections before Trouble Diagnosis".

3. DETECT MALFUNCTIONING ITEM

Check the following:
- Torque converter clutch solenoid valve. Refer to CVT-91, "Component Inspection".
- Lock-up select solenoid valve. Refer to CVT-135, "Component Inspection".

OK or NG

OK >> GO TO 4.
NG >> Repair or replace damaged parts.

4. CHECK OUTPUT SPEED SENSOR (SECONDARY SPEED SENSOR) SYSTEM AND INPUT SPEED SENSOR (PRIMARY SPEED SENSOR) SYSTEM

Check output speed sensor (secondary speed sensor) system and input speed sensor (primary speed sensor) system. Refer to CVT-80, CVT-76.

OK or NG

OK >> GO TO 5.
NG >> Repair or replace damaged parts.

5. CHECK DTC

Perform CVT-93, "DTC Confirmation Procedure".

OK or NG

OK >> **INSPECTION END**
NG >> GO TO 6.

6. CHECK TCM

1. Check TCM input/output signals. Refer to CVT-45, "TCM Terminal and Reference Value".
2. If NG, re-check TCM pin terminals for damage or loose connection with harness connector.

OK or NG

OK >> **INSPECTION END**
NG >> 1. Repair or replace damaged parts.
2. Replace the transaxle assembly. Refer to CVT-178, "Removal and Installation".

DTC P0745 LINE PRESSURE SOLENOID VALVE

Description

INFOID:0000000001703545

- The pressure control solenoid valve A (line pressure solenoid valve) is included in the control valve assembly.
- The pressure control solenoid valve A (line pressure solenoid valve) regulates the oil pump discharge pressure to suit the driving condition in response to a signal sent from the TCM.

CONSULT-III Reference Value in Data Monitor Mode

INFOID:0000000001703546

Remarks: Specification data are reference values.

Item name	Condition	Display value (Approx.)
ISOLT2	Release your foot from the accelerator pedal.	0.8 A
	Press the accelerator pedal all the way down.	0.0 A

On Board Diagnosis Logic

INFOID:0000000001703547

- This is an OBD-II self-diagnostic item.
- Diagnostic trouble code “P0745 L/PRESS SOL/CIRC” with CONSULT-III is detected under the following conditions.
- TCM detects an improper voltage drop when it tries to operate the solenoid valve.
- When TCM compares target value with monitor value and detects an irregularity.

Possible Cause

INFOID:0000000001703548

- Harness or connectors
  (Solenoid circuit is open or shorted.)
- Pressure control solenoid valve A (Line pressure solenoid valve)

DTC Confirmation Procedure

INFOID:0000000001703549

NOTE:
If “DTC Confirmation Procedure” has been previously performed, always turn ignition switch OFF and wait at least 10 seconds before performing the next test.
After the repair, perform the following procedure to confirm the malfunction is eliminated.

WITH CONSULT-III

1. Turn ignition switch ON and select “DATA MONITOR” mode for “TRANSMISSION” with CONSULT-III.
2. Start engine and wait at least 5 seconds.
3. If DTC is detected, go to CVT-97, "Diagnosis Procedure".

WITH GST

Follow the procedure “WITH CONSULT-III”.

Wiring Diagram - CVT - LPSV

INFOID:0000000001703550

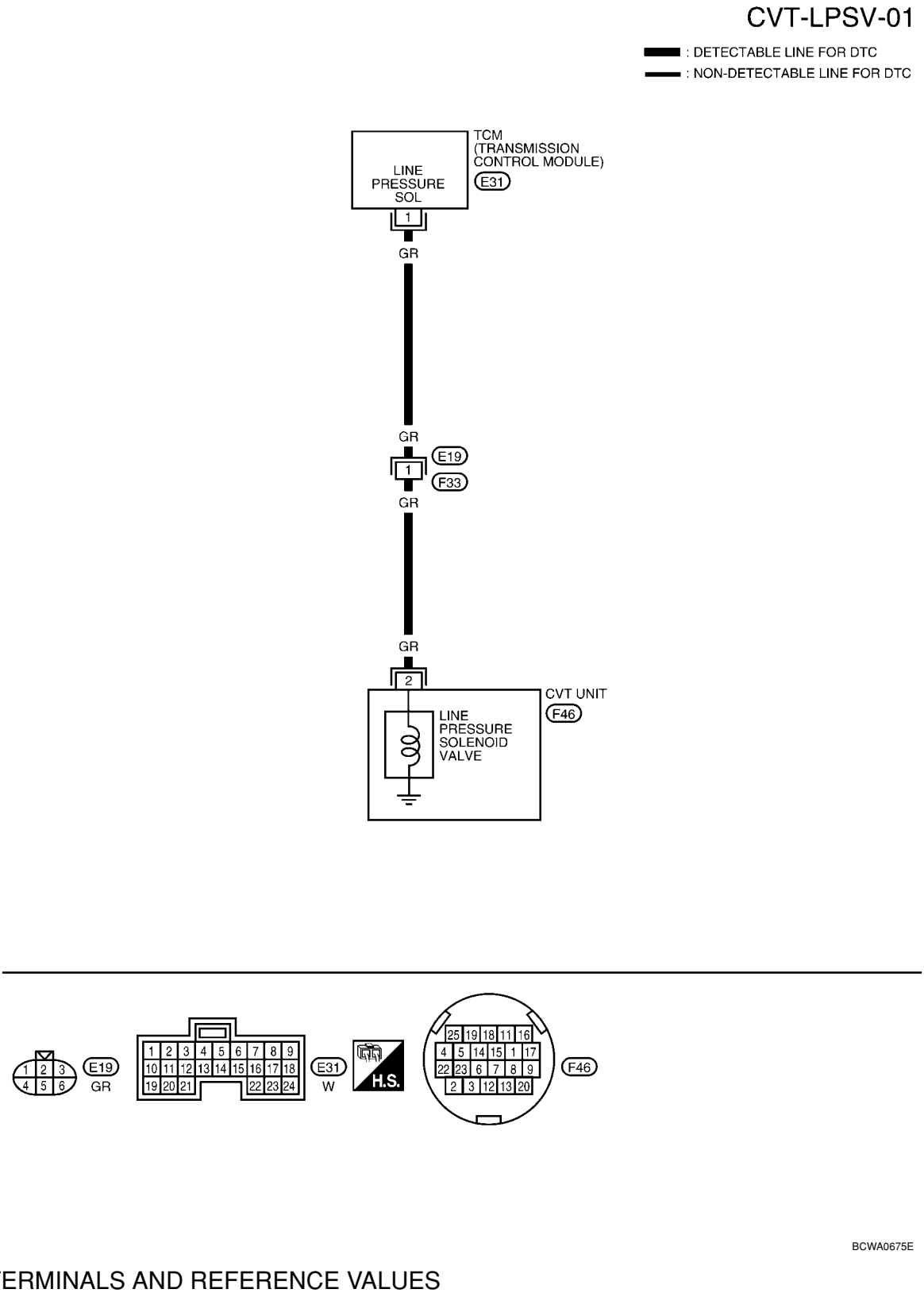

TCM TERMINALS AND REFERENCE VALUES

Refer to CVT-45, "TCM Terminal and Reference Value".

Diagnosis Procedure

INFOID:0000000001703551

1. CHECK INPUT SIGNAL

With CONSULT-III

1. Start engine.
2. Select “MAIN SIGNALS” in “DATA MONITOR” mode for “TRANSMISSION” with CONSULT-III.
3. Read out the value of “ISOLT2”.

Item name	Condition	Display value (Approx.)
ISOLT2	Release your foot from the accelerator pedal.	0.8 A
	Press the accelerator pedal all the way down.	0.0 A

Without CONSULT-III

1. Start engine.
2. Check voltage between TCM connector terminal and ground.

Name	Connector	Terminal	Condition	Voltage (Approx.)
Pressure control solenoid valve A (Line pressure solenoid valve)	E31	1 - ground	Release your foot from the accelerator pedal.	5.0 - 7.0 V
			Press the accelerator pedal all the way down.	1.0 - 3.0 V

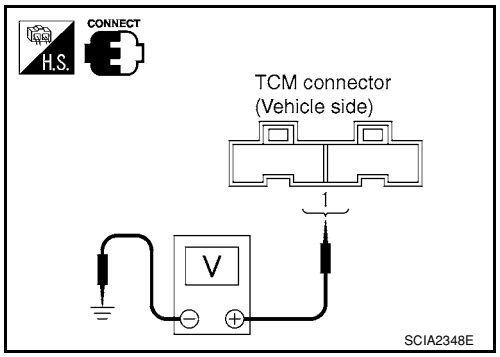

3. Turn ignition switch OFF.
4. Disconnect TCM connector.
5. Check if there is continuity between connector terminal and ground.

OK or NG

OK >> GO TO 5.
NG >> GO TO 2.

2. CHECK PRESSURE CONTROL SOLENOID VALVE A (LINE PRESSURE SOLENOID VALVE) CIRCUIT

1. Turn ignition switch OFF.
2. Disconnect TCM connector.
3. Check resistance between TCM connector terminal and ground.

Solenoid valve	Connector	Terminal	Resistance (Approx.)
Pressure control solenoid valve A (Line pressure solenoid valve)	E31	1 - ground	3 - 9 Ω

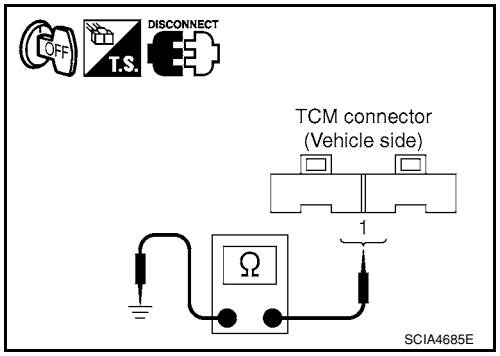

OK or NG

OK >> GO TO 5.
NG >> GO TO 3.

3. CHECK VALVE RESISTANCE

1. Turn ignition switch OFF.
2. Disconnect CVT unit harness connector.

3. Check resistance between CVT unit harness connector terminal and ground.

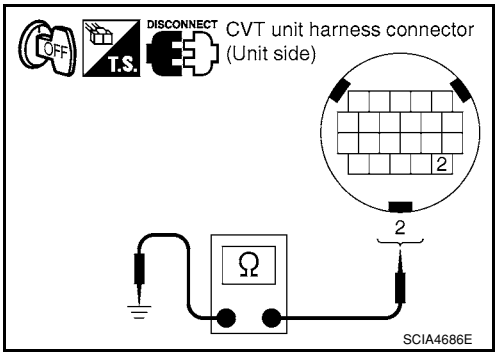

Solenoid valve	Connector	Terminal	Resistance (Approx.)
Pressure control solenoid valve A (Line pressure solenoid valve)	F46	2 - Ground	3 - 9 Ω

OK or NG

OK >> GO TO 4.
NG >> Replace the transaxle assembly. Refer to CVT-178, "Removal and Installation".

4. CHECK HARNESS BETWEEN TCM AND PRESSURE CONTROL SOLENOID VALVE A (LINE PRESSURE SOLENOID VALVE)

1. Turn ignition switch OFF.
2. Disconnect CVT unit harness connector and TCM connector.
3. Check continuity between TCM connector terminal and CVT unit harness connector terminal.

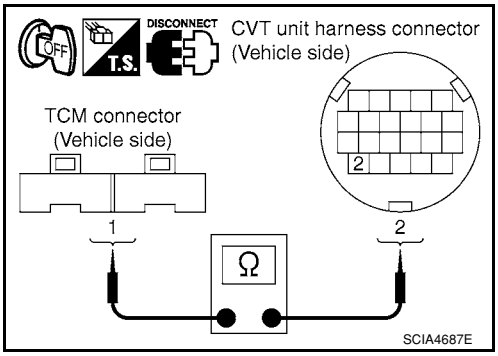

Item	Connector	Terminal	Continuity
TCM	E31	1	Yes
CVT unit harness connector	F46	2	

4. If OK, check harness for short to ground and short to power.
5. If OK, check continuity between ground and CVT assembly.
6. Reinstall any part removed.

OK or NG

OK >> GO TO 5.
NG >> Repair open circuit or short to ground or short to power in harness or connectors.

5. CHECK DTC

Perform CVT-95, "DTC Confirmation Procedure".

OK or NG

OK >> **INSPECTION END**
NG >> GO TO 6.

6. CHECK TCM

1. Check TCM terminals and reference values. Refer to CVT-45, "TCM Terminal and Reference Value".
2. If NG, re-check TCM pin terminals for damage or loose connection with harness connector.

OK or NG

OK >> **INSPECTION END**
NG >> 1. Repair or replace damaged parts.
2. Replace the transaxle assembly. Refer to CVT-178, "Removal and Installation".

Component Inspection

INFOID:0000000001703552

PRESSURE CONTROL SOLENOID VALVE A (LINE PRESSURE SOLENOID VALVE)

1. Turn ignition switch OFF.
2. Disconnect CVT unit harness connector.

3. Check resistance between CVT unit harness connector terminal and ground.

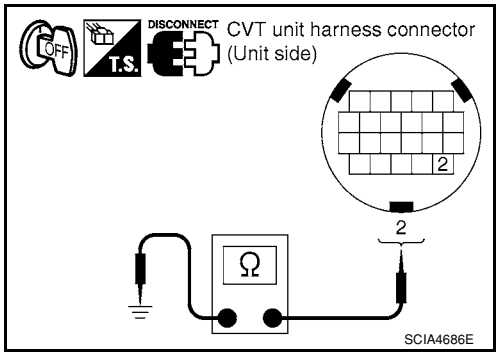

Solenoid valve	Connector	Terminal	Resistance (Approx.)
Pressure control solenoid valve A (Line pressure solenoid valve)	F46	2 - Ground	3 - 9 Ω

4. If NG, replace the transaxle assembly. Refer to CVT-178, "Removal and Installation".

DTC P0746 PRESSURE CONTROL SOLENOID A PERFORMANCE (LINE PRESSURE SOLENOID VALVE)

Description

INFOID:0000000001703553

- The pressure control solenoid valve A (line pressure solenoid valve) is included in the control valve assembly.
- The pressure control solenoid valve A (line pressure solenoid valve) regulates the oil pump discharge pressure to suit the driving condition in response to a signal sent from the TCM.

CONSULT-III Reference Value in Data Monitor Mode

INFOID:0000000001703554

Remarks: Specification data are reference values.

Item name	Condition	Display value (Approx.)
PRI PRESS	“N” position idle	0.4 MPa

On Board Diagnosis Logic

INFOID:0000000001703555

- This is an OBD-II self-diagnostic item.
- Diagnostic trouble code “P0746 PRS CNT SOL/A FCTN” with CONSULT-III is detected under the following conditions.
- Unexpected gear ratio was detected in the LOW side due to excessively low line pressure.

Possible Cause

INFOID:0000000001703556

- Line pressure control system
- Output speed sensor (Secondary speed sensor)
- Input speed sensor (Primary speed sensor)

DTC Confirmation Procedure

INFOID:0000000001703557

CAUTION:
Always drive vehicle at a safe speed.
NOTE:
If “DTC Confirmation Procedure” has been previously performed, always turn ignition switch OFF and wait at least 10 seconds before performing the next test.
After the repair, touch “ERASE” on “SELF-DIAG RESULTS” and then perform the following procedure to confirm the malfunction is eliminated.

WITH CONSULT-III

1. Turn ignition switch ON and select “DATA MONITOR” mode for “TRANSMISSION” with CONSULT-III.
2. Start engine and maintain the following conditions for at least 10 consecutive seconds. Test start from 0 km/h (0 MPH).
   ATF TEMP SEN: 1.0 - 2.0 V
   ACC PEDAL OPEN: More than 1.0/8
   RANGE: “D” position
   VEHICLE SPEED: 10 km/h (6 MPH) More than
   Driving location: Driving the vehicle uphill (increased engine load) will help maintain the driving conditions required for this test.
3. If DTC is detected, go to CVT-100, "Diagnosis Procedure".

WITH GST

Follow the procedure “WITH CONSULT-III”.

Diagnosis Procedure

INFOID:0000000001703558

1.CHECK INPUT SIGNAL

With CONSULT-III

1. Start engine.
2. Select “MAIN SIGNALS” in “DATA MONITOR” mode for “TRANSMISSION” with CONSULT-III.
3. Start vehicle and read out the value of “PRI PRESS”.

Item name	Condition	Display value (Approx.)
PRI PRESS	“N” position idle	0.4 MPa

Without CONSULT-III

1. Start engine.
2. Check voltage between TCM connector terminal and ground.

Name	Connector	Terminal	Condition	Voltage (Approx.)
Transmission fluid pressure sensor B (Primary pressure sensor)	E32	41 - Ground	“N” position idle	0.7 V

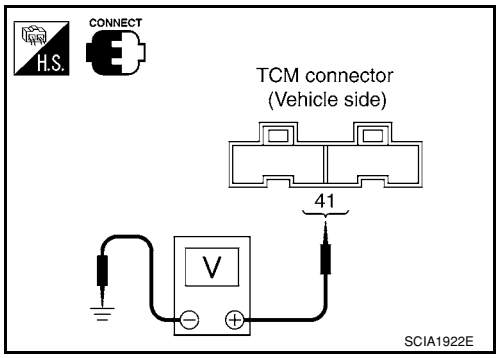

OK or NG

OK >> GO TO 5.
NG >> GO TO 2.

2. CHECK LINE PRESSURE

Perform line pressure test. Refer to CVT-36, "Inspections before Trouble Diagnosis".

OK or NG

OK >> GO TO 3.
NG >> Repair or replace damaged parts. Refer to CVT-36, "Inspections before Trouble Diagnosis".

3. DETECT MALFUNCTIONING ITEM

Check pressure control solenoid valve A (line pressure solenoid valve). Refer to CVT-98, "Component Inspection".

OK or NG

OK >> GO TO 4.
NG >> Repair or replace damaged parts.

4. CHECK OUTPUT SPEED SENSOR (SECONDARY SPEED SENSOR) SYSTEM AND INPUT SPEED SENSOR (PRIMARY SPEED SENSOR) SYSTEM

Check output speed sensor (secondary speed sensor) system and input speed sensor (primary speed sensor) system. Refer to CVT-80, CVT-76.

OK or NG

OK >> GO TO 5.
NG >> Repair or replace damaged parts.

5. DETECT MALFUNCTIONING ITEM

Check the following:

- Power supply and ground circuit for TCM. Refer to CVT-122, "Wiring Diagram - CVT - POWER".
- The TCM pin terminals for damage or loose connection with harness connector.

OK or NG

OK >> GO TO 6.
NG >> Repair or replace damaged parts.

6. CHECK DTC

Perform CVT-100, "DTC Confirmation Procedure".

OK or NG

OK >> **INSPECTION END**
NG >> Replace the transaxle assembly or TCM. Refer to CVT-178, "Removal and Installation".

DTC P0776 PRESSURE CONTROL SOLENOID B PERFORMANCE (SEC PRESSURE SOLENOID VALVE)

Description

INFOID:0000000001703559

- The pressure control solenoid valve B (secondary pressure solenoid valve) is included in the control valve assembly.
- The pressure control solenoid valve B (secondary pressure solenoid valve) regulates the secondary pressure to suit the driving condition in response to a signal sent from the TCM.

CONSULT-III Reference Value in Data Monitor Mode

INFOID:0000000001703560

Remarks: Specification data are reference values.

Item name	Condition	Display value (Approx.)
SEC PRESS	“N” position idle	0.8 MPa

On Board Diagnosis Logic

INFOID:0000000001703561

- This is an OBD-II self-diagnostic item.
- Diagnostic trouble code “P0776 PRS CNT SOL/B FCTN” with CONSULT-III is detected when secondary pressure is too high or too low compared with the commanded value while driving.

Possible Cause

INFOID:0000000001703562

- Harness or connectors
  (Solenoid circuit is open or shorted.)
- Pressure control solenoid valve B (Secondary pressure solenoid valve system)
- Transmission fluid pressure sensor A (Secondary pressure sensor)
- Line pressure control system

DTC Confirmation Procedure

INFOID:0000000001703563

CAUTION:
Always drive vehicle at a safe speed.
NOTE:
If “DTC Confirmation Procedure” has been previously performed, always turn ignition switch OFF and wait at least 10 seconds before performing the next test.
After the repair, perform the following procedure to confirm the malfunction is eliminated.

WITH CONSULT-III

1. Turn ignition switch ON and select “DATA MONITOR” mode for “TRANSMISSION” with CONSULT-III.
2. Start engine and maintain the following conditions for at least 30 consecutive seconds.
   ATF TEMP SEN: 1.0 - 2.0 V
   ACC PEDAL OPEN: More than 1.0/8
   RANGE: “D” position
   VEHICLE SPEED: 10 km/h (6 MPH) More than
   Driving location: Driving the vehicle uphill (increased engine load) will help maintain the driving conditions required for this test.
3. If DTC is detected, go to CVT-102, "Diagnosis Procedure".

WITH GST

Follow the procedure “WITH CONSULT-III”.

Diagnosis Procedure

INFOID:0000000001703564

1.CHECK INPUT SIGNAL

With CONSULT-III

1. Start engine.
2. Select “MAIN SIGNALS” in “DATA MONITOR” mode for “TRANSMISSION” with CONSULT-III.
3. Start vehicle and read out the value of “SEC PRESS”.

Item name	Condition	Display value (Approx.)
SEC PRESS	“N” position idle	0.8 MPa

OK or NG

OK >> GO TO 5.
NG >> GO TO 2.

2. CHECK LINE PRESSURE

Perform line pressure test. Refer to CVT-36, "Inspections before Trouble Diagnosis".

OK or NG

OK >> GO TO 3.
NG >> Repair or replace damaged parts. Refer to CVT-36, "Inspections before Trouble Diagnosis".

3. DETECT MALFUNCTIONING ITEM

Check the following:
- Pressure control solenoid valve B (Secondary pressure solenoid valve). Refer to CVT-107, "Component Inspection".
- Pressure control solenoid valve A (Line pressure solenoid valve). Refer to CVT-98, "Component Inspection".

OK or NG

OK >> GO TO 4.
NG >> Repair or replace damaged parts.

4. CHECK TRANSMISSION FLUID PRESSURE SENSOR A (SECONDARY PRESSURE SENSOR) SYSTEM

Check transmission fluid pressure sensor A (secondary pressure sensor) system. Refer to CVT-109.

OK or NG

OK >> GO TO 5.
NG >> Repair or replace damaged parts.

5. DETECT MALFUNCTIONING ITEM

Check the following:
- Power supply and ground circuit for TCM. Refer to CVT-122, "Wiring Diagram - CVT - POWER".
- The TCM pin terminals for damage or loose connection with harness connector.

OK or NG

OK >> GO TO 6.
NG >> Repair or replace damaged parts.

6. CHECK DTC

Perform CVT-102, "DTC Confirmation Procedure".

OK or NG

OK >> **INSPECTION END**
NG >> Replace the transaxle assembly. Refer to CVT-178, "Removal and Installation".

DTC P0778 PRESSURE CONTROL SOLENOID B ELECTRICAL (SEC PRESSURE SOLENOID VALVE)

Description

INFOID:0000000001703565

- The pressure control solenoid valve B (secondary pressure solenoid valve) is included in the control valve assembly.
- The pressure control solenoid valve B (secondary pressure solenoid valve) regulates the oil pump discharge pressure to suit the driving condition in response to a signal sent from the TCM.

CONSULT-III Reference Value in Data Monitor Mode

INFOID:0000000001703566

Remarks: Specification data are reference values.

Item name	Condition	Display value (Approx.)
ISOLT3	Secondary pressure low - Secondary pressure high	0.8 - 0.0 A
SOLMON3	“N” position idle	0.6 - 0.7 A
	When stalled	0.4 - 0.6 A

On Board Diagnosis Logic

INFOID:0000000001703567

- This is an OBD-II self-diagnostic item.
- Diagnostic trouble code “P0778 PRS CNT SOL/B CIRC” with CONSULT-III is detected under the following conditions.
- TCM detects an improper voltage drop when it tries to operate the solenoid valve.
- When TCM compares target value with monitor value and detects an irregularity.

Possible Cause

INFOID:0000000001703568

- Harness or connectors
  (Solenoid circuit is open or shorted.)
- Pressure control solenoid valve B (Secondary pressure solenoid valve)

DTC Confirmation Procedure

INFOID:0000000001703569

NOTE:
If “DTC Confirmation Procedure” has been previously performed, always turn ignition switch OFF and wait at least 10 seconds before performing the next test.
After the repair, perform the following procedure to confirm the malfunction is eliminated.

WITH CONSULT-III

1. Turn ignition switch ON.
2. Select “DATA MONITOR” mode for “TRANSMISSION” with CONSULT-III.
3. Start engine and wait at least 5 seconds.
4. If DTC is detected, go to CVT-106, "Diagnosis Procedure" .

WITH GST

Follow the procedure “WITH CONSULT-III”.

Wiring Diagram - CVT - SECPSV

INFOID:0000000001703570

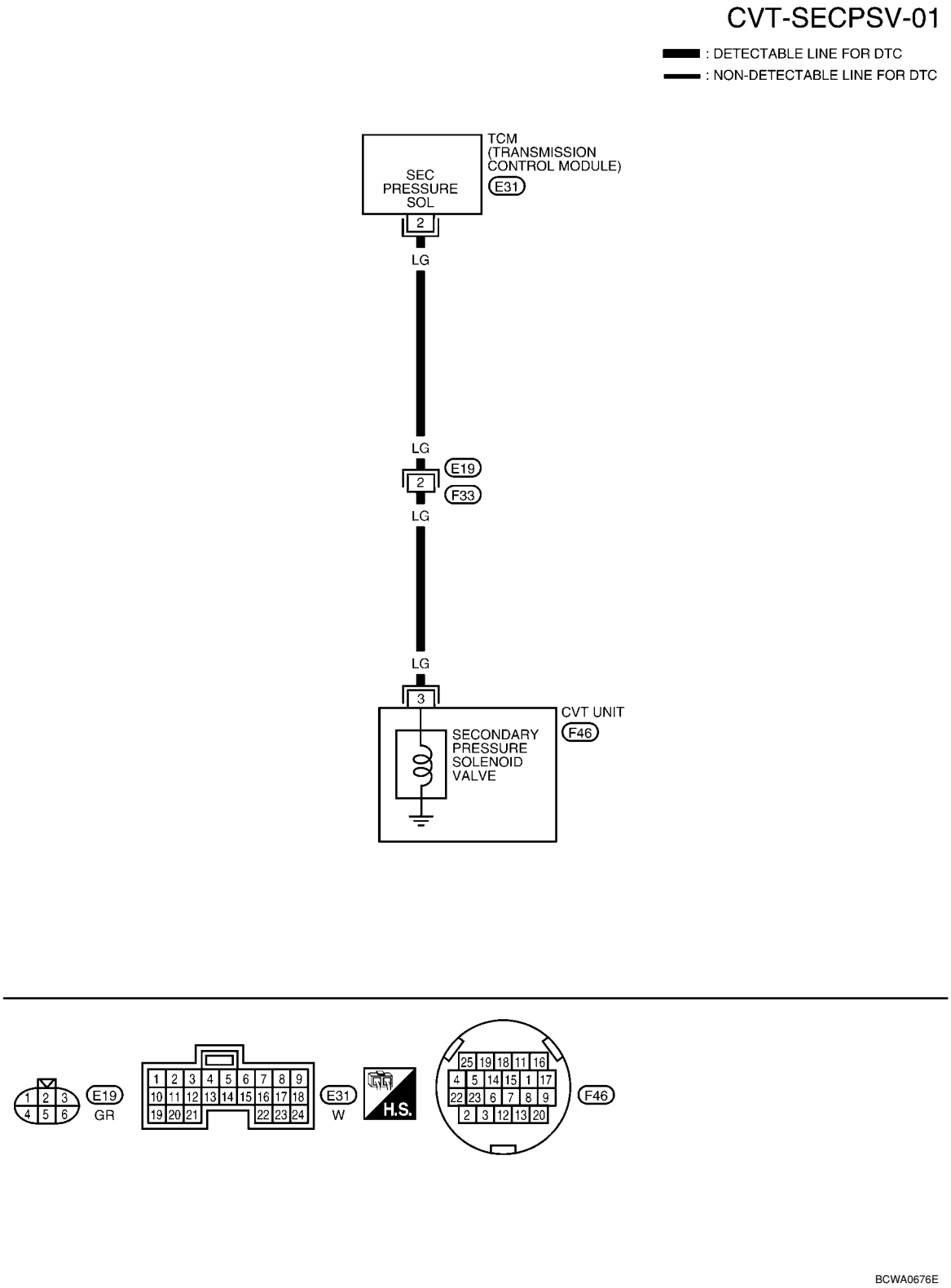

TCM TERMINALS AND REFERENCE VALUES

Refer to CVT-45, "TCM Terminal and Reference Value" .

Diagnosis Procedure

INFOID:0000000001703571

1. CHECK INPUT SIGNAL

With CONSULT-III

1. Start engine.
2. Select “MAIN SIGNALS” in “DATA MONITOR” mode for “TRANSMISSION” with CONSULT-III.
3. Read out the value of “ISOLT3”.

Item name	Condition	Display value (Approx.)
ISOLT3	Secondary pressure low - Secondary pressure high	0.8 - 0.0 A

Without CONSULT-III

1. Start engine.
2. Check voltage between TCM connector terminal and ground.

Name	Connector	Terminal	Condition	Voltage (Approx.)
Pressure control solenoid valve B (Secondary pressure solenoid valve)	E31	2 - ground	Release your foot from the accelerator pedal.	5.0 - 7.0 V
			Press the accelerator pedal all the way down.	3.0 - 4.0 V

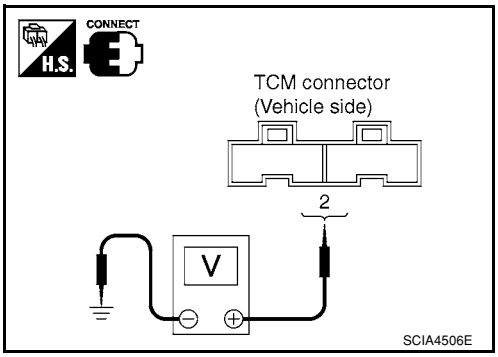

3. Turn ignition switch OFF.
4. Disconnect TCM connector.
5. Check if there is continuity between connector terminal and ground.

OK or NG

OK >> GO TO 5.
NG >> GO TO 2.

2. CHECK PRESSURE CONTROL SOLENOID VALVE B (SECONDARY PRESSURE SOLENOID VALVE) CIRCUIT

1. Turn ignition switch OFF.
2. Disconnect TCM connector.
3. Check resistance between TCM connector terminal and ground.

Solenoid valve	Connector	Terminal	Resistance (Approx.)
Pressure control solenoid valve B (Secondary pressure solenoid valve)	E31	2 - Ground	3 - 9 Ω

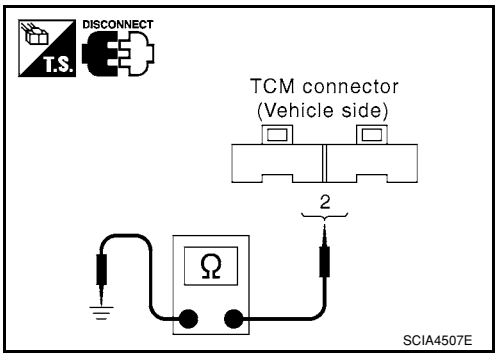

OK or NG

OK >> GO TO 5.
NG >> GO TO 3.

3. CHECK VALVE RESISTANCE

1. Turn ignition switch OFF.
2. Disconnect CVT unit harness connector.

3. Check resistance between CVT unit harness connector terminal and ground.

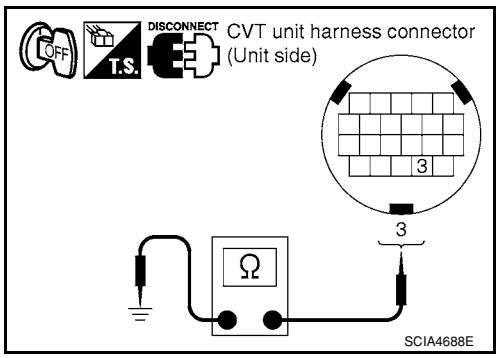

Solenoid valve	Connector	Terminal	Resistance (Approx.)
Pressure control solenoid valve B (Secondary pressure solenoid valve)	F46	3 - Ground	3 - 9 Ω

OK or NG

OK >> GO TO 4.
NG >> Repair or replace damaged parts.

4. CHECK HARNESS BETWEEN TCM AND PRESSURE CONTROL SOLENOID VALVE B (SECONDARY PRESSURE SOLENOID VALVE)

1. Turn ignition switch OFF.
2. Disconnect TCM connector and CVT unit harness connector.
3. Check continuity between TCM connector terminal and CVT unit harness connector terminal.

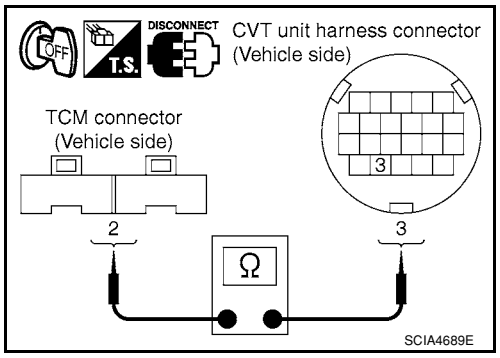

Item	Connector	Terminal	Continuity
TCM connector	E31	2	Yes
CVT unit harness connector	F46	3	

4. If OK, check harness for short to ground and short to power.
5. Reinstall any part removed.

OK or NG

OK >> GO TO 5.
NG >> Repair or replace damaged parts.

5. CHECK DTC

Perform CVT-104, "DTC Confirmation Procedure" .

OK or NG

OK >> **INSPECTION END**
NG >> GO TO 6.

6. CHECK TCM

1. Check TCM input/output signals. Refer to CVT-45, "TCM Terminal and Reference Value" .
2. If NG, re-check TCM pin terminals for damage or loose connection with harness connector.

OK or NG

OK >> **INSPECTION END**
NG >> 1. Repair or replace damaged parts.
2. Replace the transaxle assembly. Refer to CVT-178, "Removal and Installation" .

Component Inspection

INFOID:0000000001703572

PRESSURE CONTROL SOLENOID VALVE B (SECONDARY PRESSURE SOLENOID VALVE)

1. Turn ignition switch OFF.
2. Disconnect CVT unit harness connector.

3. Check resistance between CVT unit harness connector terminal and ground.

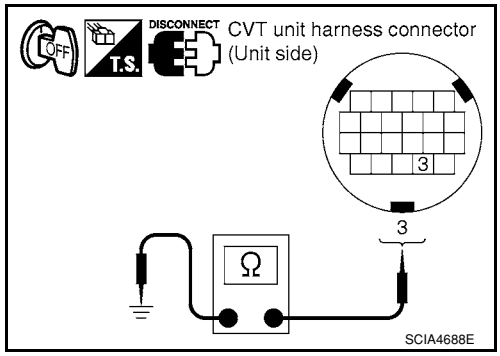

Solenoid Valve	Connector	Terminal	Resistance (Approx.)
Pressure control solenoid valve B (Secondary pressure solenoid valve)	F46	3 - Ground	3 - 9 Ω

4. If NG, replace the transaxle assembly. Refer to CVT-178, "Removal and Installation" .

DTC P0840 TRANSMISSION FLUID PRESSURE SENSOR A CIRCUIT (SEC PRESSURE SENSOR)

Description

INFOID:0000000001703573

- The transmission fluid pressure sensor A (secondary pressure sensor) is included in the control valve assembly.
- The transmission fluid pressure sensor A (secondary pressure sensor) detects secondary pressure of CVT and sends TCM the signal.

CONSULT-III Reference Value in Data Monitor Mode

INFOID:0000000001703574

Remarks: Specification data are reference values.

Item name	Condition	Display value (Approx.)
SEC HYDR SEN	“N” position idle	1.0 V
SEC PRESS		0.8 MPa

On Board Diagnosis Logic

INFOID:0000000001703575

- This is an OBD-II self-diagnostic item.
- Diagnostic trouble code “P0840 TR PRS SENS/A CIRC” with CONSULT-III is detected when TCM detects an improper voltage drop when it receives the sensor signal.

Possible Cause

INFOID:0000000001703576

- Transmission fluid pressure sensor A (Secondary pressure sensor)
- Harness or connectors
  (Switch circuit is open or shorted.)

DTC Confirmation Procedure

INFOID:0000000001703577

NOTE:
If “DTC Confirmation Procedure” has been previously performed, always turn ignition switch OFF and wait at least 10 seconds before performing the next test.
After the repair, perform the following procedure to confirm the malfunction is eliminated.

WITH CONSULT-III

1. Turn ignition switch ON and select “DATA MONITOR” mode for “TRANSMISSION” with CONSULT-III.
2. Make sure that output voltage of line temperature sensor is within the range below.
   ATF TEMP SEN: 1.0 - 2.0 V
   If out of range, drive the vehicle to decrease the voltage (warm up the fluid) or stop engine to increase the voltage (cool down the fluid)
3. Start engine and wait for at least 5 consecutive seconds.
4. If DTC is detected, go to CVT-111, "Diagnosis Procedure" .

WITH GST

Follow the procedure “WITH CONSULT-III”.

Wiring Diagram - CVT - SECPS

INFOID:0000000001703578

CVT-SECPS-01

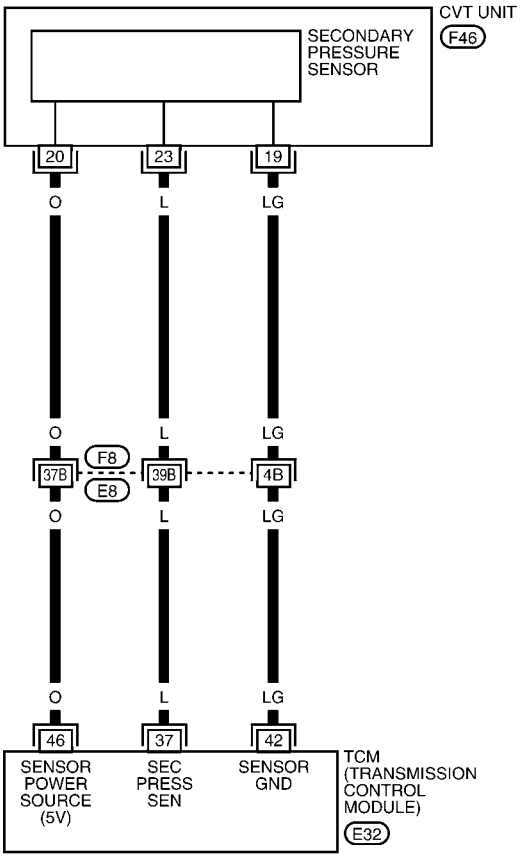

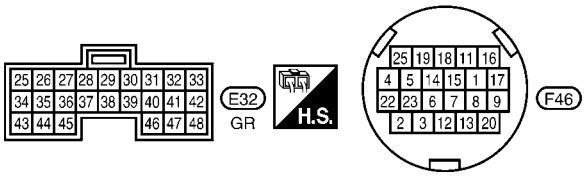

REFER TO THE FOLLOWING.
F8 - SUPER MULTIPLE JUNCTION (SMJ)

BCWA0677E

TCM TERMINALS AND REFERENCE VALUES

Refer to CVT-45, "TCM Terminal and Reference Value".

Diagnosis Procedure

INFOID:0000000001703579

1. CHECK INPUT SIGNAL

With CONSULT-III

1. Start engine.
2. Select “ECU INPUT SIGNALS” in “DATA MONITOR” mode for “TRANSMISSION” with CONSULT-III.
3. Start vehicle and read out the value of “SEC HYDR SEN”.

Item name	Condition	Display value (Approx.)
SEC HYDR SEN	“N” position idle	1.0 V

Without CONSULT-III

1. Start engine.
2. Check voltage between TCM connector terminal and ground.

Name	Connector	Terminal	Condition	Voltage (Approx.)
Transmission fluid pressure sensor A (Secondary pressure sensor)	E32	37 - Ground	“N” position idle	1.0 V

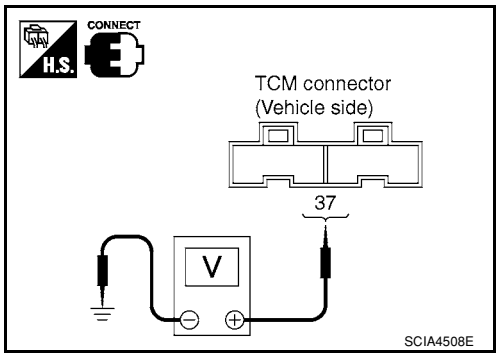

OK or NG

OK >> GO TO 5.
NG >> GO TO 2.

2. CHECK SENSOR POWER AND SENSOR GROUND

1. Turn ignition switch ON. (Do not start engine)
2. Check voltage between TCM connector terminals.

Item	Connector	Terminal	Data (Approx.)
TCM connector	E32	46 - 42	5.0 V

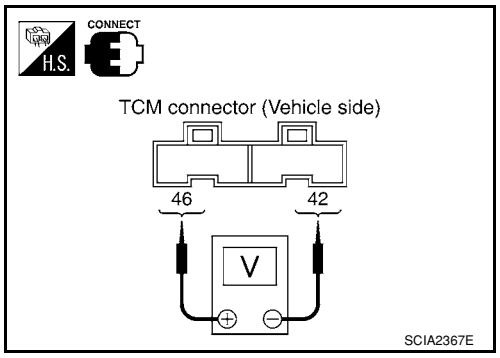

OK or NG

OK >> GO TO 4.
NG >> GO TO 3.

3. CHECK HARNESS BETWEEN TCM AND CVT UNIT HARNESS CONNECTOR (SENSOR POWER AND SENSOR GROUND)

1. Turn ignition switch OFF.
2. Disconnect TCM connector and CVT unit harness connector.
3. Check continuity between TCM connector terminals and CVT unit harness connector terminals.

Item	Connector	Terminal	Continuity
TCM	E32	42	Yes
CVT unit harness connector	F46	19	
TCM	E32	46	Yes
CVT unit harness connector	F46	20	

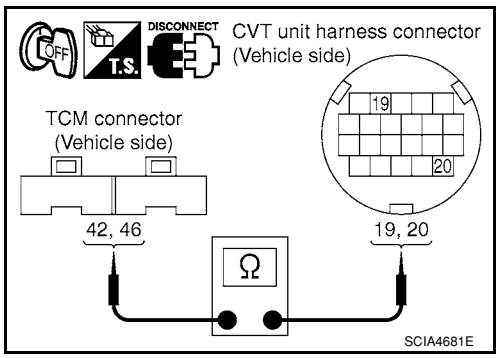

4. If OK, check harness for short to ground and short to power.
5. Reinstall any part removed.

OK or NG

OK >> Replace TCM. Refer to CVT-8, "Service After Replacing TCM and Transaxle Assembly" .
NG >> Repair open circuit or short to ground or short to power in harness or connectors.

4. CHECK HARNESS BETWEEN TCM AND TRANSMISSION FLUID PRESSURE SENSOR A (SECONDARY PRESSURE SENSOR)

1. Turn ignition switch OFF.
2. Disconnect TCM connector and CVT unit harness connector.
3. Check continuity between TCM connector terminal and CVT unit harness connector terminal.

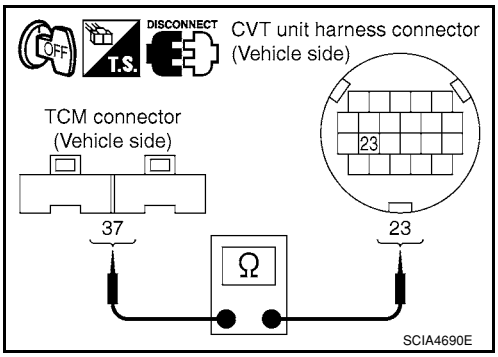

Item	Connector	Terminal	Continuity
TCM	E32	37	Yes
CVT unit harness connector	F46	23	

4. If OK, check harness for short to ground and short to power.
5. Reinstall any part removed.

OK or NG

OK >> GO TO 5.
NG >> Repair open circuit or short to ground or short to power in harness or connectors.

5. CHECK DTC

Perform CVT-109, "DTC Confirmation Procedure" .

OK or NG

OK >> **INSPECTION END**
NG >> GO TO 6.

6. CHECK TCM

1. Check TCM input/output signals. Refer to CVT-45, "TCM Terminal and Reference Value" .
2. If NG, re-check TCM pin terminals for damage or loose connection with harness connector.

OK or NG

OK >> Replace the transaxle assembly. Refer to CVT-178, "Removal and Installation" .
NG >> Repair or replace damaged parts.

DTC P0841 PRESSURE SENSOR FUNCTION

Description

INFOID:0000000001703580

Using the engine load (throttle position), the primary pulley revolution speed, and the secondary pulley revolution speed as input signal, TCM changes the operating pressure of the primary pulley and the secondary pulley and changes the groove width of the pulley to control the gear ratio.

CONSULT-III Reference Value in Data Monitor Mode

INFOID:0000000001703581

Remarks: Specification data are reference values.

Item name	Condition	Display value (Approx.)
PRI HYDR SEN	“N” position idle	0.7 V
SEC HYDR SEN		1.0 V

On Board Diagnosis Logic

INFOID:0000000001703582

- This is not an OBD-II self-diagnostic item.
- Diagnostic trouble code “P0841 PRESS SEN/FNCTN” with CONSULT-III is detected when correlation between the values of the secondary pressure sensor and the primary pressure sensor is out of specification.

Possible Cause

INFOID:0000000001703583

- Transmission fluid pressure sensor A (Secondary pressure sensor)
- Transmission fluid pressure sensor B (Primary pressure sensor)
- Harness or connectors
  (Sensor circuit is open or shorted.)

DTC Confirmation Procedure

INFOID:0000000001703584

CAUTION:
Always drive vehicle at a safe speed.
NOTE:
If “DTC Confirmation Procedure” has been previously performed, always turn ignition switch OFF and wait at least 10 seconds before performing the next test.
After the repair, perform the following procedure to confirm the malfunction is eliminated.

WITH CONSULT-III

1. Turn ignition switch ON and select “DATA MONITOR” mode for “TRANSMISSION” with CONSULT-III.
2. Start engine and maintain the following conditions for at least 12 consecutive seconds.
   VEHICLE SPEED: 40 km/h (25 MPH) More than
   RANGE: “D” position
3. If DTC is detected, go to CVT-113, "Diagnosis Procedure".

Diagnosis Procedure

INFOID:0000000001703585

1. CHECK CAN COMMUNICATION LINE

Perform the self-diagnosis. Refer to CVT-47, "CONSULT-III Function (TRANSMISSION)".

Is any malfunction of the “U1000 CAN COMM CIRCUIT” indicated?

YES >> Check CAN communication line. Refer to CVT-56.
NO >> GO TO 2.

2. CHECK INPUT SIGNALS

With CONSULT-III

1. Start engine.
2. Select “ECU INPUT SIGNALS” in “DATA MONITOR” mode for “TRANSMISSION” with CONSULT-III.
3. Start vehicle and read out the value of “SEC HYDR SEN” and “PRI HYDR SEN”.

Item name	Condition	Display value (Approx.)
PRI HYDR SEN	“N” position idle	0.7 V
SEC HYDR SEN		1.0 V

Without CONSULT-III

1. Start engine.
2. Check voltage between TCM connector terminals and ground.

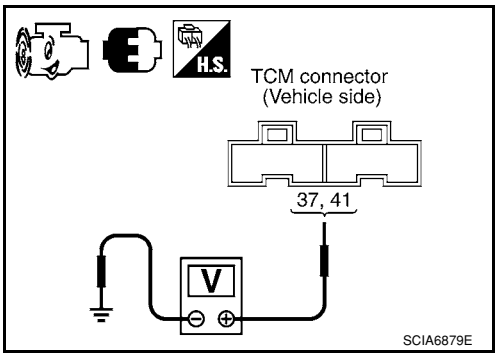

Name	Connector	Terminal	Condition	Voltage (Approx.)
Transmission fluid pressure sensor B (Primary pressure sensor)	E32	41 - Ground	“N” position idle	0.7 V
Transmission fluid pressure sensor A (Secondary pressure sensor)		37 - Ground		1.0 V

OK or NG

OK >> GO TO 6.
NG >> GO TO 3.

3. CHECK LINE PRESSURE

Perform line pressure test. Refer to CVT-36, "Inspections before Trouble Diagnosis".

OK or NG

OK >> GO TO 4.
NG >> Repair or replace damaged parts. Refer to CVT-36, "Inspections before Trouble Diagnosis".

4. CHECK TRANSMISSION FLUID PRESSURE SENSOR A (SECONDARY PRESSURE SENSOR) SYSTEM AND TRANSMISSION FLUID PRESSURE SENSOR B (PRIMARY PRESSURE SENSOR) SYSTEM

Check transmission fluid pressure sensor A (secondary pressure sensor) system and transmission fluid pressure sensor B (primary pressure sensor) system. Refer to CVT-109, CVT-115.

OK or NG

OK >> GO TO 5.
NG >> Repair or replace damaged parts.

5. DETECT MALFUNCTIONING ITEM

Check the following:

- Pressure control solenoid valve A (Line pressure solenoid valve). Refer to CVT-98, "Component Inspection".
- Pressure control solenoid valve B (Secondary pressure solenoid valve). Refer to CVT-107, "Component Inspection".
- Step motor. Refer to CVT-140, "Component Inspection".

OK or NG6

OK >> GO TO 6.
NG >> Repair or replace damaged parts.

6. CHECK DTC

Perform CVT-113, "DTC Confirmation Procedure".

OK or NG

OK >> **INSPECTION END**
NG >> Replace TCM or transaxle assembly. Refer to CVT-178, "Removal and Installation".

DTC P0845 TRANSMISSION FLUID PRESSURE SENSOR B CIRCUIT (PRI PRESSURE SENSOR)

Description

INFOID:0000000001703586

- The transmission fluid pressure sensor B (primary pressure sensor) is included in the control valve assembly.
- The transmission fluid pressure sensor B (primary pressure sensor) detects primary pressure of CVT and sends TCM the signal.

CONSULT-III Reference Value in Data Monitor Mode

INFOID:0000000001703587

Remarks: Specification data are reference values.

Item name	Condition	Display value (Approx.)
PRI HYDR SEN	“N” position idle	0.7 V

On Board Diagnosis Logic

INFOID:0000000001703588

- This is an OBD-II self-diagnostic item.
- Diagnostic trouble code “P0845 TR PRS SENS/B CIRC” with CONSULT-III is detected under the following conditions.
- When TCM detects an improper voltage drop when it receives the sensor signal.
- When TCM compares target value with monitor value and detects an irregularity.

Possible Cause

INFOID:0000000001703589

- Transmission fluid pressure sensor B (Primary pressure sensor)
- Harness or connectors
  (Sensor circuit is open or shorted.)

DTC Confirmation Procedure

INFOID:0000000001703590

NOTE:
If “DTC Confirmation Procedure” has been previously performed, always turn ignition switch OFF and wait at least 10 seconds before performing the next test.
After the repair, perform the following procedure to confirm the malfunction is eliminated.

WITH CONSULT-III

1. Turn ignition switch ON and select “DATA MONITOR” mode for “TRANSMISSION” with CONSULT-III.
2. Make sure that output voltage of line temperature sensor is within the range below.
   ATF TEMP SEN: 1.0 - 2.0 V
   If out of range, drive the vehicle to decrease the voltage (warm up the fluid) or stop engine to increase the voltage (cool down the fluid)
3. Start engine and wait for at least 5 consecutive seconds.
4. If DTC is detected, go to CVT-117, "Diagnosis Procedure" .

WITH GST

Follow the procedure “WITH CONSULT-III”.

Wiring Diagram - CVT - PRIPS

INFOID:0000000001703591

CVT-PRIPS-01

: DETECTABLE LINE FOR DTC
: NON-DETECTABLE LINE FOR DTC

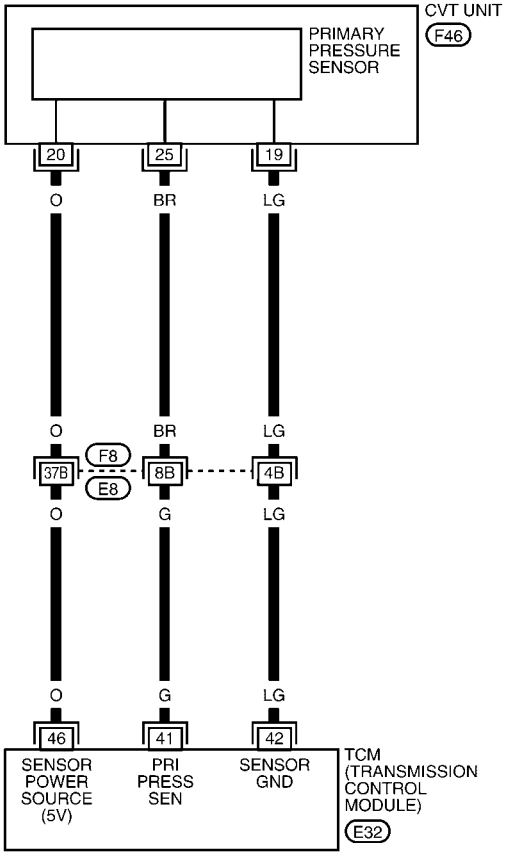

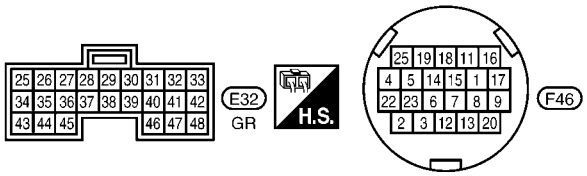

REFER TO THE FOLLOWING.
F8 - SUPER MULTIPLE JUNCTION (SMJ)

BCWA0678E

CM TERMINALS AND REFERENCE VALUES

Refer to CVT-45, "TCM Terminal and Reference Value".

Diagnosis Procedure

INFOID:0000000001703592

1. CHECK INPUT SIGNAL

With CONSULT-III

1. Start engine.
2. Select “ECU INPUT SIGNALS” in “DATA MONITOR” mode for “TRANSMISSION” with CONSULT-III.
3. Start vehicle and read out the value of “PRI HYDR SEN”.

Item name	Condition	Display value (Approx.)
PRI HYDR SEN	“N” position idle	0.7 V

Without CONSULT-III

1. Start engine.
2. Check voltage between TCM connector terminal and ground.

Name	Connector	Terminal	Condition	Voltage (Approx.)
Transmission fluid pressure sensor B (Primary pressure sensor)	E32	41 - Ground	“N” position idle	0.7 V

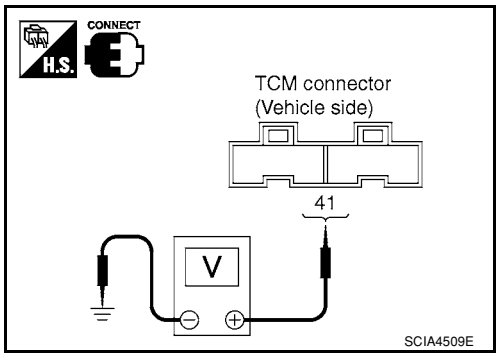

OK or NG

OK >> GO TO 5.
NG >> GO TO 2.

2. CHECK SENSOR POWER AND SENSOR GROUND

1. Turn ignition switch ON. (Do not start engine)
2. Check voltage between TCM connector terminals.

Item	Connector	Terminal	Data (Approx.)
TCM connector	E32	46 - 42	5.0 V

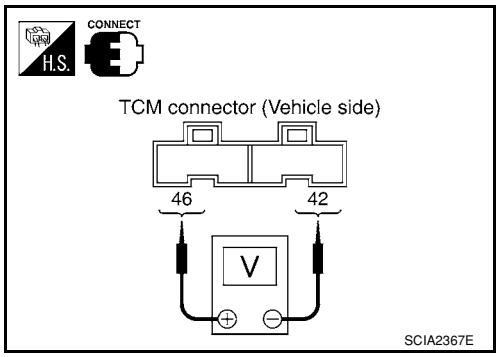

OK or NG

OK >> GO TO 4.
NG >> GO TO 3.

3. CHECK HARNESS BETWEEN TCM AND CVT UNIT HARNESS CONNECTOR (SENSOR POWER AND SENSOR GROUND)

1. Turn ignition switch OFF.
2. Disconnect TCM connector and CVT unit harness connector.
3. Check continuity between TCM connector terminals and CVT unit harness connector terminals.

Item	Connector	Terminal	Continuity
TCM	E32	42	Yes
CVT unit harness connector	F46	19	
TCM	E32	46	Yes
CVT unit harness connector	F46	20	

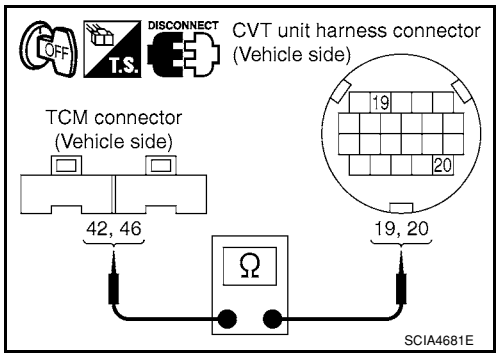

4. If OK, check harness for short to ground and short to power.
5. Reinstall any part removed.

OK or NG

OK >> Replace TCM. Refer to CVT-8, "Service After Replacing TCM and Transaxle Assembly" .
NG >> Repair open circuit or short to ground or short to power in harness or connectors.

4. CHECK HARNESS BETWEEN TCM AND TRANSMISSION FLUID PRESSURE SENSOR B (PRIMARY PRESSURE SENSOR)

1. Turn ignition switch OFF.
2. Disconnect TCM connector and CVT unit harness connector.
3. Check continuity between TCM connector terminal and CVT unit harness connector terminal.

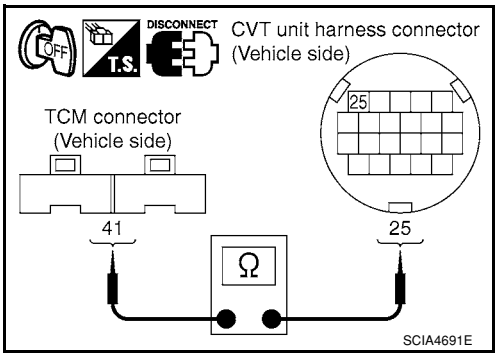

Item	Connector	Terminal	Continuity
TCM	E32	41	Yes
CVT unit harness connector	F46	25	

4. If OK, check harness for short to ground and short to power.
5. Reinstall any part removed.

OK or NG

OK >> GO TO 5.
NG >> Repair open circuit or short to ground or short to power in harness or connectors.

5. CHECK DTC

Perform CVT-115, "DTC Confirmation Procedure" .

OK or NG

OK >> **INSPECTION END**
NG >> GO TO 6.

6. CHECK TCM

1. Check TCM input/output signals. Refer to CVT-45, "TCM Terminal and Reference Value" .
2. If NG, re-check TCM pin terminals for damage or loose connection with harness connector.

OK or NG

OK >> Replace the transaxle assembly. Refer to CVT-178, "Removal and Installation" .
NG >> Repair or replace damaged parts.

DTC P0868 SECONDARY PRESSURE DOWN

Description

INFOID:0000000001703593

- The pressure control solenoid valve B (secondary pressure solenoid valve) is included in the control valve assembly.
- The pressure control solenoid valve B (secondary pressure solenoid valve) regulates the secondary pressure to suit the driving condition in response to a signal sent from the TCM.

CONSULT-III Reference Value in Data Monitor Mode

INFOID:0000000001703594

Remarks: Specification data are reference values.

Item name	Condition	Display value (Approx.)
SEC PRESS	“N” position idle	0.8 MPa

On Board Diagnosis Logic

INFOID:0000000001703595

- This is not an OBD-II self-diagnostic item.
- Diagnostic trouble code “P0868 SEC/PRESS DOWN” with CONSULT-III is detected when secondary fluid pressure is too low compared with the commanded value while driving.

Possible Cause

INFOID:0000000001703596

- Harness or connectors
  (Solenoid circuit is open or shorted.)
- Pressure control solenoid valve B (Secondary pressure solenoid valve) system
- Transmission fluid pressure sensor A (Secondary pressure sensor)
- Line pressure control system

DTC Confirmation Procedure

INFOID:0000000001703597

CAUTION:
Always drive vehicle at a safe speed.
NOTE:
If “DTC Confirmation Procedure” has been previously performed, always turn ignition switch OFF and wait at least 10 seconds before performing the next test.
After the repair, perform the following procedure to confirm the malfunction is eliminated.

WITH CONSULT-III

1. Turn ignition switch ON and select “DATA MONITOR” mode for “TRANSMISSION” with CONSULT-III.
2. Make sure that output voltage of CVT fluid temperature sensor is within the range below.
   ATF TEMP SEN: 1.0 - 2.0 V
   If out of range, drive the vehicle to decrease the voltage (warm up the fluid) or stop engine to increase the voltage (cool down the fluid)
3. Start engine and maintain the following conditions for at least 10 consecutive seconds.
   VEHICLE SPEED (accelerate slowly): 0 → 50 km/h (31 MPH)
   ACC PEDAL OPEN: 0.5/8 - 1.0/8
   RANGE: “D” position
4. If DTC is detected, go to CVT-119, "Diagnosis Procedure".

Diagnosis Procedure

INFOID:0000000001703598

1.CHECK INPUT SIGNAL

With CONSULT-III

1. Start engine.
2. Select “MAIN SIGNALS” in “DATA MONITOR” mode for “TRANSMISSION” with CONSULT-III.
3. Start vehicle and read out the value of “SEC PRESS”.

Item name	Condition	Display value (Approx.)
SEC PRESS	“N” position idle	0.8 MPa

OK or NG

OK >> GO TO 5.
NG >> GO TO 2.

2. CHECK LINE PRESSURE

Perform line pressure test. Refer to CVT-36, "Inspections before Trouble Diagnosis".

OK or NG

OK >> GO TO 3.
NG >> Repair or replace damaged parts. Refer to CVT-36, "Inspections before Trouble Diagnosis".

3. DETECT MALFUNCTIONING ITEM

Check the following:
- Pressure control solenoid valve B (Secondary pressure solenoid valve). Refer to CVT-107, "Component Inspection".
- Pressure control solenoid valve A (Line pressure solenoid valve). Refer to CVT-98, "Component Inspection".

OK or NG

OK >> GO TO 4.
NG >> Repair or replace damaged parts.

4. CHECK TRANSMISSION FLUID PRESSURE SENSOR A (SECONDARY PRESSURE SENSOR) SYSTEM

Check transmission fluid pressure sensor A (secondary pressure sensor) system. Refer to CVT-109.

OK or NG

OK >> GO TO 5.
NG >> Repair or replace damaged parts.

5. DETECT MALFUNCTIONING ITEM

Check the following:
- Power supply and ground circuit for TCM. Refer to CVT-122, "Wiring Diagram - CVT - POWER".
- The TCM pin terminals for damage or loose connection with harness connector.

OK or NG

OK >> GO TO 6.
NG >> Repair or replace damaged parts.

6. CHECK DTC

Perform CVT-119, "DTC Confirmation Procedure".

OK or NG

OK >> **INSPECTION END**
NG >> Replace the transaxle assembly. Refer to CVT-178, "Removal and Installation".

DTC P1701 TRANSMISSION CONTROL MODULE (POWER SUPPLY)

Description

INFOID:0000000001703599

When the power supply to the TCM is cut OFF, for example because the battery is removed, and the self-diagnosis memory function stops, malfunction is detected.

NOTE:
Since "P1701 TCM-POWER SUPPLY" will be indicated when replacing TCM, perform diagnosis after erasing "SELF-DIAG RESULTS"

On Board Diagnosis Logic

INFOID:0000000001703600

- This is not an OBD-II self-diagnostic item.
- Diagnostic trouble code "P1701 TCM-POWER SUPPLY" with CONSULT-III is detected when TCM does not receive the voltage signal from the battery power supply.
- This is not a malfunction message. (Whenever shutting OFF a power supply to the TCM, this message appears on the screen.)

Possible Cause

INFOID:0000000001703601

Harness or connectors
(Battery or ignition switch and TCM circuit is open or shorted.)

DTC Confirmation Procedure

INFOID:0000000001703602

NOTE:
If "DTC Confirmation Procedure" has been previously conducted, always turn ignition switch OFF and wait at least 10 seconds before conducting the next test.
After the repair, perform the following procedure to confirm the malfunction is eliminated.

WITH CONSULT-III

1. Turn ignition switch ON. (Do not start engine.)
2. Select "DATA MONITOR" mode for "TRANSMISSION" with CONSULT-III.
3. Wait for at least 2 consecutive seconds.
4. If DTC is detected, go to CVT-123, "Diagnosis Procedure" .

Wiring Diagram - CVT - POWER

INFOID:0000000001703603

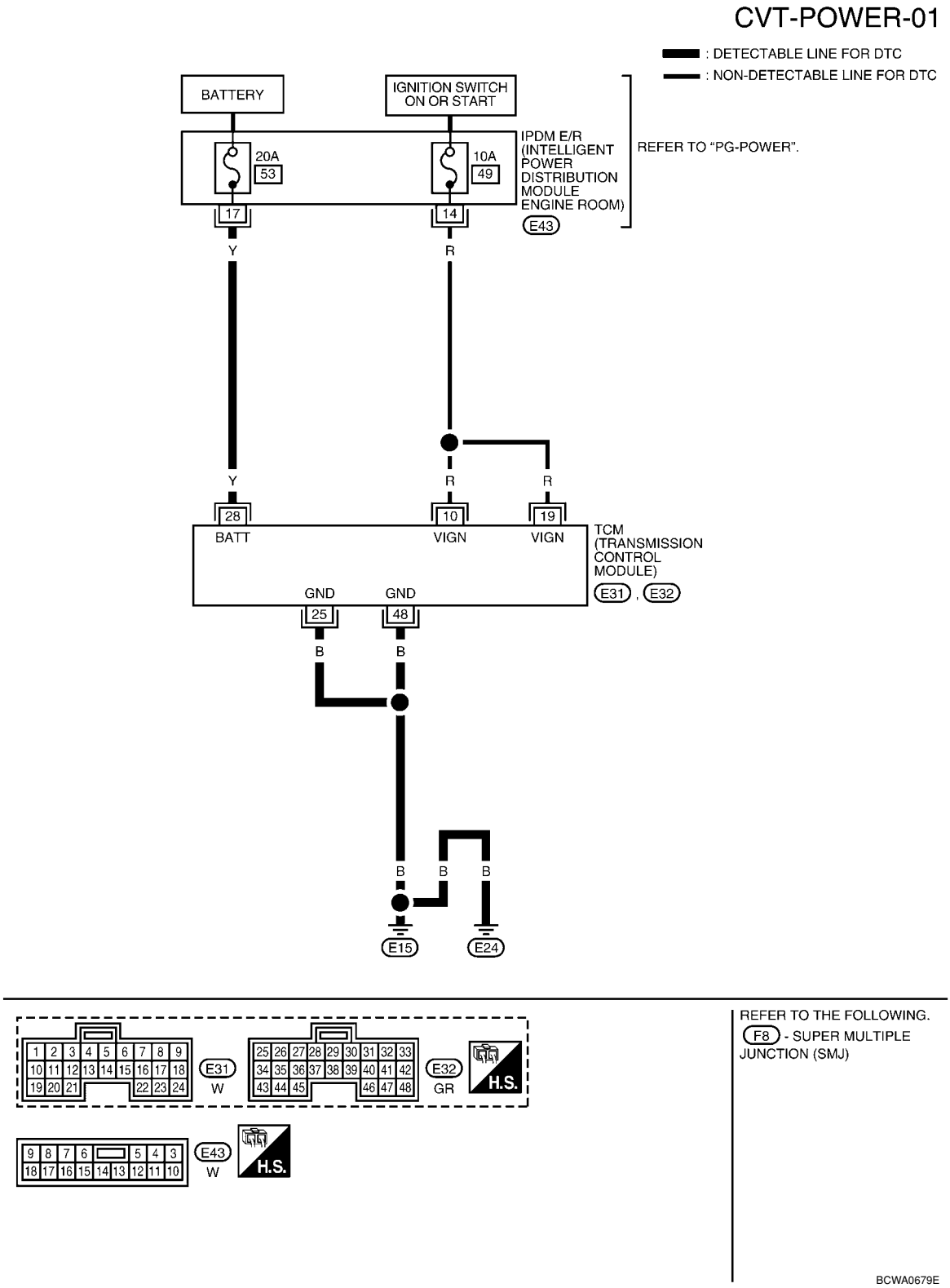

TCM TERMINALS AND REFERENCE VALUES

Refer to CVT-45, "TCM Terminal and Reference Value" .

Diagnosis Procedure

INFOID:0000000001703604

1. CHECK DTC

1. Turn ignition switch ON. (Do not start engine.)
2. Select “SELF-DIAG RESULTS” mode for “TRANSMISSION” with CONSULT-III.
3. Erase self-diagnostic results. Refer to CVT-26, "OBD-II Diagnostic Trouble Code (DTC)" .
4. Turn ignition switch OFF, and wait for 5 seconds or more.
5. Start engine.
6. Confirm self-diagnostic results again. Refer to CVT-47, "CONSULT-III Function (TRANSMISSION)" .

Is the “P1701 TCM-POWER SUPPLY” displayed?

YES >> GO TO 2.
NO >> **INSPECTION END**

2. CHECK TCM POWER SOURCE, STEP 1

1. Turn ignition switch OFF.
2. Check voltage between TCM connector terminal and ground.

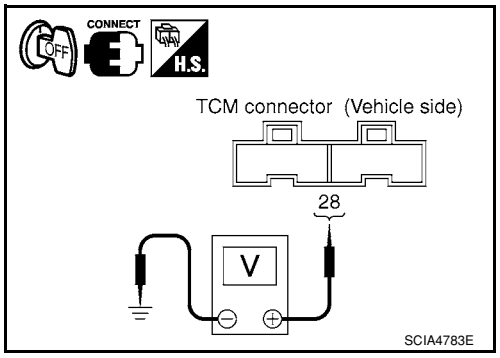

Name	Connector	Terminal	Condition	Voltage (Approx.)
Power supply (memory back-up)	E32	28 - Ground	Always	Battery voltage

OK or NG

OK >> GO TO 3.
NG >> GO TO 4.

3. CHECK TCM POWER SOURCE, STEP 2

1. Turn ignition switch ON. (Do not start engine.)
2. Check voltage between TCM connector terminals and ground.

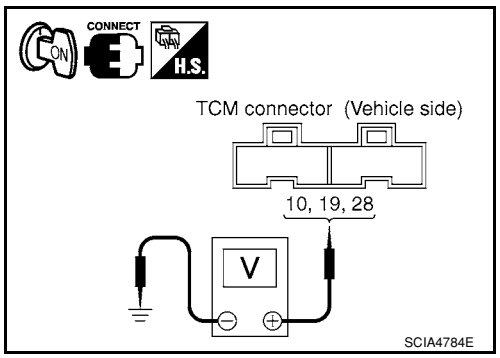

Name	Connector	Terminal	Condition	Voltage (Approx.)
Power supply	E31	10 - Ground	ON	Battery voltage
			OFF	0 V
Power supply		19 - Ground	ON	Battery voltage
			OFF	0 V
Power supply (memory back-up)	E32	28 - Ground	Always	Battery voltage

OK or NG

OK >> GO TO 5.
NG >> GO TO 4.

4. DETECT MALFUNCTIONING ITEM

Check the following.
- Harness for short or open between battery and TCM connector terminal 28
- Harness for short or open between ignition switch and TCM connector terminal 10, 19

- 10 A fuse (No.49, located in the IPDM E/R)
- 20 A fuse (No.53, located in the IPDM E/R)
- Ignition switch. Refer to PG-3 .

OK or NG

OK >> GO TO 5.
NG >> Repair or replace damaged parts.

5. CHECK TCM GROUND CIRCUIT

1. Turn ignition switch OFF.
2. Disconnect TCM connector.
3. Check continuity between TCM connector terminals and ground.

Name	Connector	Terminal	Continuity
Ground	E32	25	Yes
		48	

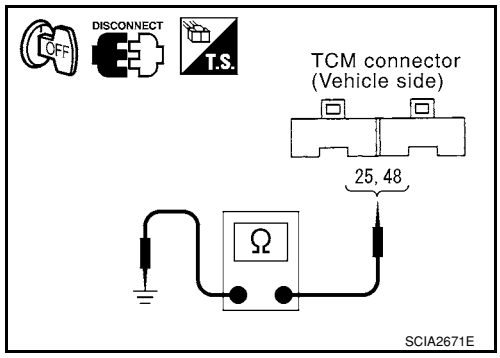

OK or NG

OK >> GO TO 6.
NG >> Repair open circuit or short to ground or short to power in harness or connectors.

6. CHECK DTC

Perform CVT-121, "DTC Confirmation Procedure" .

OK or NG

OK >> **INSPECTION END**
NG >> GO TO 7.

7. CHECK TCM

1. Check TCM input/output signals. Refer to CVT-45, "TCM Terminal and Reference Value" .
2. If NG, re-check TCM pin terminals for damage or loose connection with harness connector.

OK or NG

OK >> **INSPECTION END**
NG >> Repair or replace damaged parts.

DTC P1705 THROTTLE POSITION SENSOR

Description

INFOID:0000000001703605

Electric throttle control actuator consists of throttle control motor, accelerator pedal position sensor, throttle position sensor etc. The actuator sends a signal to the ECM, and ECM sends the signal to TCM with CAN communication.

CONSULT-III Reference Value in Data Monitor Mode

INFOID:0000000001703606

Remarks: Specification data are reference values.

Item name	Condition	Display value (Approx.)
ACC PEDAL OPEN	Released accelerator pedal - Fully depressed accelerator pedal	0.0/8 - 8.0/8

On Board Diagnosis Logic

INFOID:0000000001703607

- This is not an OBD-II self-diagnostic item.
- Diagnostic trouble code “P1705 TP SEN/CIRC A/T” with CONSULT-III is detected when TCM does not receive the proper accelerator pedal position signals (input by CAN communication) from ECM.

Possible Cause

INFOID:0000000001703608

- ECM
- Harness or connectors
  (CAN communication line is open or shorted.)

DTC Confirmation Procedure

INFOID:0000000001703609

NOTE:
If “DTC Confirmation Procedure” has been previously performed, always turn ignition switch OFF and wait at least 10 seconds before performing the next test.
After the repair, perform the following procedure to confirm the malfunction is eliminated.

WITH CONSULT-III

1. Turn ignition switch ON. (Do not start engine.)
2. Select “DATA MONITOR” mode for “TRANSMISSION” with CONSULT-III.
3. Depress accelerator pedal fully and release it, then wait for 5 seconds.
4. If DTC is detected, go to CVT-125, "Diagnosis Procedure".

Diagnosis Procedure

INFOID:0000000001703610

1. CHECK CAN COMMUNICATION LINE

Perform the self-diagnosis check. Refer to CVT-47, "CONSULT-III Function (TRANSMISSION)".

Is any malfunction of the “U1000 CAN COMM CIRCUIT” indicated?

YES >> Check the CAN communication line. Refer to CVT-56.
NO >> GO TO 2.

2. CHECK INPUT SIGNAL

With CONSULT-III

1. Turn ignition switch ON. (Do not start engine.)
2. Select “ECU INPUT SIGNALS” in “DATA MONITOR” mode for “TRANSMISSION” with CONSULT-III.
3. Read out the value of “ACC PEDAL OPEN”.

Item name	Condition	Display value (Approx.)
ACC PEDAL OPEN	Release accelerator pedal. ↓ Fully depressed accelerator pedal	0.0/8 ↓ 8.0/8

OK or NG

OK >> GO TO 4.
NG >> GO TO 3.

3. CHECK DTC WITH ECM

With CONSULT-III

1. Turn ignition switch ON. (Do not start engine.)
2. Select “SELF-DIAG RESULTS” mode for “ENGINE” with CONSULT-III. Refer to EC-109, "CONSULT-II Function (ENGINE)".

OK or NG

OK >> GO TO 4.
NG >> Check the DTC Detected Item. Go to EC-109, "CONSULT-II Function (ENGINE)".

4. CHECK DTC

Perform CVT-125, "DTC Confirmation Procedure".

OK or NG

OK >> **INSPECTION END**
NG >> Repair or replace damaged parts.

DTC P1722 ESTM VEHICLE SPEED SIGNAL

Description

INFOID:0000000001703611

The vehicle speed signal is transmitted from ABS actuator and electric unit (control unit) to TCM by CAN communication line.

CONSULT-III Reference Value in Data Monitor Mode

INFOID:0000000001703612

Remarks: Specification data are reference values.

Item name	Condition	Display value
ESTM VSP SIG	During driving	Approximately matches the speedometer reading.
VEHICLE SPEED		

On Board Diagnosis Logic

INFOID:0000000001703613

- This is not an OBD-II self-diagnostic item.
- Diagnostic trouble code “P1722 ESTM VEH SPD SIG” with CONSULT-III is detected when TCM does not receive the proper vehicle speed signal (input by CAN communication) from ABS actuator and electric unit (control unit).

Possible Cause

INFOID:0000000001703614

- Harness or connectors
  (Sensor circuit is open or shorted.)
- ABS actuator and electric unit (control unit)

DTC Confirmation Procedure

INFOID:0000000001703615

CAUTION:
Always drive vehicle at a safe speed.
NOTE:
If “DTC Confirmation Procedure” has been previously performed, always turn ignition switch OFF and wait at least 10 seconds before performing the next test.
After the repair, touch “ERASE” on “SELF-DIAG RESULTS” and then perform the following procedure to confirm the malfunction is eliminated.

WITH CONSULT-III

1. Turn ignition switch ON. (Do not start engine.)
2. Select “DATA MONITOR” mode for “TRANSMISSION” with CONSULT-III.
3. Start engine and maintain the following conditions for at least 5 consecutive seconds.
   ACC PEDAL OPEN: 1.0/8 or less
   VEHICLE SPEED SE: 30 km/h (17 MPH) or more
4. If DTC is detected, go to CVT-127, "Diagnosis Procedure".

Diagnosis Procedure

INFOID:0000000001703616

1. CHECK CAN COMMUNICATION LINE

Perform the self-diagnosis check. Refer to CVT-47, "CONSULT-III Function (TRANSMISSION)".

Is any malfunction of the “U1000 CAN COMM CIRCUIT” indicated?

YES >> Check CAN communication line. Refer to CVT-56.
NO >> GO TO 2.

2. CHECK ABS ACTUATOR AND ELECTRIC UNIT (CONTROL UNIT)

Perform ABS actuator and electric unit (control unit) self-diagnosis check. Refer to BRC-18, "CONSULT-III Function (ABS)".

OK or NG

OK >> GO TO 3.
NG >> Repair or replace damaged parts.

3. CHECK INPUT SIGNALS

With CONSULT-III

1. Start engine.
2. Select “SELECTION FROM MENU” in “DATA MONITOR” mode for “TRANSMISSION” with CONSULT-III.
3. Drive vehicle and read out the value of “VEHICLE SPEED” and “ESTM VSP SIG”.

Item name	Condition	Display value
ESTM VSP SIG	During driving	Approximately matches the speedometer reading.
VEHICLE SPEED		

4. Check if there is a great difference between the two values.

OK or NG

OK >> GO TO 5.
NG >> GO TO 4.

4. CHECK TCM

Check TCM input/output signals. Refer to CVT-45, "TCM Terminal and Reference Value".

OK or NG

OK >> GO TO 5.
NG >> Repair or replace damaged parts.

5. CHECK DTC

Perform CVT-127, "DTC Confirmation Procedure".

OK or NG

OK >> **INSPECTION END**
NG >> GO TO 2.

DTC P1723 CVT SPEED SENSOR FUNCTION

Description

INFOID:0000000001703617

- The input speed sensor (primary speed sensor) is included in the control valve assembly.
- The vehicle speed sensor CVT [output speed sensor (secondary speed sensor)] detects the revolution of the idler gear and generates a pulse signal. The pulse signal is sent to the TCM, which converts it into vehicle speed.
- The input speed sensor (primary speed sensor) detects the primary pulley revolution speed and sends a signal to the TCM.

On Board Diagnosis Logic

INFOID:0000000001703618

- This is not an OBD-II self-diagnostic item.
- Diagnostic trouble code “P1723 CVT SPD SEN/FNCTN” with CONSULT-III is detected when there is a great difference between the vehicle speed signal and the secondary speed sensor signal.

CAUTION:
One of the “P0720 VEH SPD SEN/CIR AT”, the “P0715 INPUT SPD SEN/CIRC” or the “P0725 ENGINE SPEED SIG“ is displayed with the DTC at the same time.

Possible Cause

INFOID:0000000001703619

- Harness or connectors
  (Sensor circuit is open or shorted.)
- Output speed sensor (Secondary speed sensor)
- Input speed sensor (Primary speed sensor)
- Engine speed signal system

DTC Confirmation Procedure

INFOID:0000000001703620

CAUTION:
Always drive vehicle at a safe speed.
NOTE:
If “DTC Confirmation Procedure” has been previously performed, always turn ignition switch OFF and wait at least 10 seconds before performing the next test.
After the repair, touch “ERASE” on “SELF-DIAG RESULTS” and then perform the following procedure to confirm the malfunction is eliminated.

WITH CONSULT-III

1. Turn ignition switch ON and select “DATA MONITOR” mode for “TRANSMISSION” with CONSULT-III.
2. Start engine and maintain the following conditions for at least 5 consecutive seconds.
   VEHICLE SPEED SE: 10 km/h (6 MPH) or more
   ACC PEDAL OPEN: More than 1.0/8
   RANGE: “D” position
   ENG SPEED: 450 rpm or more
   Driving location: Driving the vehicle uphill (increased engine load) will help maintain the driving conditions required for this test.
3. If DTC is detected, go to CVT-129, "Diagnosis Procedure".

Diagnosis Procedure

INFOID:0000000001703621

1. CHECK STEP MOTOR FUNCTION

Perform the self-diagnosis check. Refer to CVT-47, "CONSULT-III Function (TRANSMISSION)".

Is a malfunction in the step motor function indicated in the results?

YES >> Repair or replace damaged parts. (Check the step motor function. Refer to CVT-141.)
NO >> GO TO 2.

2. CHECK OUTPUT SPEED SENSOR (SECONDARY SPEED SENSOR SYSTEM) AND INPUT SPEED SENSOR (PRIMARY SPEED SENSOR) SYSTEM

Check output speed sensor (secondary speed sensor) system and input speed sensor (primary speed sensor) system. Refer to CVT-80, CVT-76.

OK or NG

OK >> GO TO 3.
NG >> Repair or replace damaged parts.

3. CHECK ENGINE SPEED SIGNAL SYSTEM

Check engine speed signal system. Refer to CVT-85.

OK or NG

OK >> GO TO 4.
NG >> Repair or replace damaged parts. Refer to EC-531.

4. DETECT MALFUNCTIONING ITEM

Check the following:
- Power supply and ground circuit for TCM. Refer to CVT-121.
- The TCM pin terminals for damage or loose connection with harness connector.

OK or NG

OK >> GO TO 5.
NG >> Repair or replace damaged parts.

5. CHECK DTC

Perform CVT-129, "DTC Confirmation Procedure".

OK or NG

OK >> **INSPECTION END**
NG >> Replace TCM or transaxle assembly. Refer to CVT-8, "Service After Replacing TCM and Transaxle Assembly", CVT-178, "Removal and Installation".

DTC P1726 ELECTRIC THROTTLE CONTROL SYSTEM

Description

INFOID:0000000001703622

Electric throttle control actuator consists of throttle control motor, accelerator pedal position sensor, throttle position sensor etc. The actuator sends a signal to the ECM, and ECM sends the signal to TCM with CAN communication.

On Board Diagnosis Logic

INFOID:0000000001703623

- This is not an OBD-II self-diagnostic item.
- Diagnostic trouble code “P1726 ELEC TH CONTROL” with CONSULT-III is detected when the electronically controlled throttle for ECM is malfunctioning.

Possible Cause

INFOID:0000000001703624

Harness or connectors
(Sensor circuit is open or shorted.)

DTC Confirmation Procedure

INFOID:0000000001703625

NOTE:
If “DTC Confirmation Procedure” has been previously performed, always turn ignition switch OFF and wait at least 10 seconds before performing the next test.
After the repair, touch “ERASE” on “SELF-DIAG RESULTS” and then perform the following procedure to confirm the malfunction is eliminated.

WITH CONSULT-III

1. Turn ignition switch ON. (Do not start engine.)
2. Select “DATA MONITOR” mode for “TRANSMISSION” with CONSULT-III.
3. Start engine and let it idle for 5 second.
4. If DTC is detected, go to CVT-131, "Diagnosis Procedure".

Diagnosis Procedure

INFOID:0000000001703626

1. CHECK DTC WITH ECM

With CONSULT-III

1. Turn ignition switch ON. (Do not start engine.)
2. Select “SELF-DIAG RESULTS” mode for “ENGINE” with CONSULT-III. Refer to EC-109, "CONSULT-II Function (ENGINE)".

OK or NG

OK >> GO TO 2.
NG >> Check the DTC Detected Item. Refer to EC-109, "CONSULT-II Function (ENGINE)".
- If CAN communication line is detected, go to CVT-56.

2. CHECK DTC

Perform CVT-131, "DTC Confirmation Procedure".

OK or NG

OK >> **INSPECTION END**
NG >> GO TO 3.

3. DETECT MALFUNCTIONING ITEM

Check the following:
- The TCM pin terminals for damage or loose connection with harness connector.

OK or NG

OK >> Replace TCM. Refer to CVT-8, "Service After Replacing TCM and Transaxle Assembly".
NG >> Repair or replace damaged parts.

DTC P1740 LOCK-UP SELECT SOLENOID VALVE CIRCUIT

Description

INFOID:0000000001703627

- The lock-up select solenoid valve is included in the control valve assembly.
- The lock-up select solenoid valve controls lock-up clutch pressure or forward clutch pressure (reverse brake pressure).
- When controlling lock-up clutch, the valve is turned OFF. When controlling forward clutch, it is turned ON.

CONSULT-III Reference Value in Data Monitor Mode

INFOID:0000000001703628

Item name	Condition	Display value
LUSEL SOL OUT	Selector lever in “P” and “N” positions	ON
	Wait at least for 5 seconds with the selector lever in “R”, “D” and “L” positions	OFF

On Board Diagnosis Logic

INFOID:0000000001703629

- This is an OBD-II self-diagnostic item.
- Diagnostic trouble code “P1740 LU-SLCT SOL/CIRC” with CONSULT-III is detected under the following conditions.
- When TCM compares target value with monitor value and detects an irregularity.

Possible Cause

INFOID:0000000001703630

- Lock-up select solenoid valve
- Harness or connectors
  (Solenoid circuit is open or shorted.)

DTC Confirmation Procedure

INFOID:0000000001703631

CAUTION:
Always drive vehicle at a safe speed.
NOTE:
If “DTC Confirmation Procedure” has been previously performed, always turn ignition switch OFF and wait at least 10 seconds before performing the next test.
After the repair, touch “ERASE” on “SELF-DIAG RESULTS” and then perform the following procedure to confirm the malfunction is eliminated.

WITH CONSULT-III

1. Turn ignition switch ON. (Do not start engine.)
2. Select “DATA MONITOR” mode for “TRANSMISSION” with CONSULT-III.
3. Start engine and maintain the following conditions for at least 5 consecutive seconds.
   RANGE: “D” position and “N” position
   (At each time, wait for 5 seconds.)
4. If DTC is detected, go to CVT-134, "Diagnosis Procedure" .

WITH GST

Follow the procedure “WITH CONSULT-III”.

Wiring Diagram - CVT - L/USSV

INFOID:0000000001703632

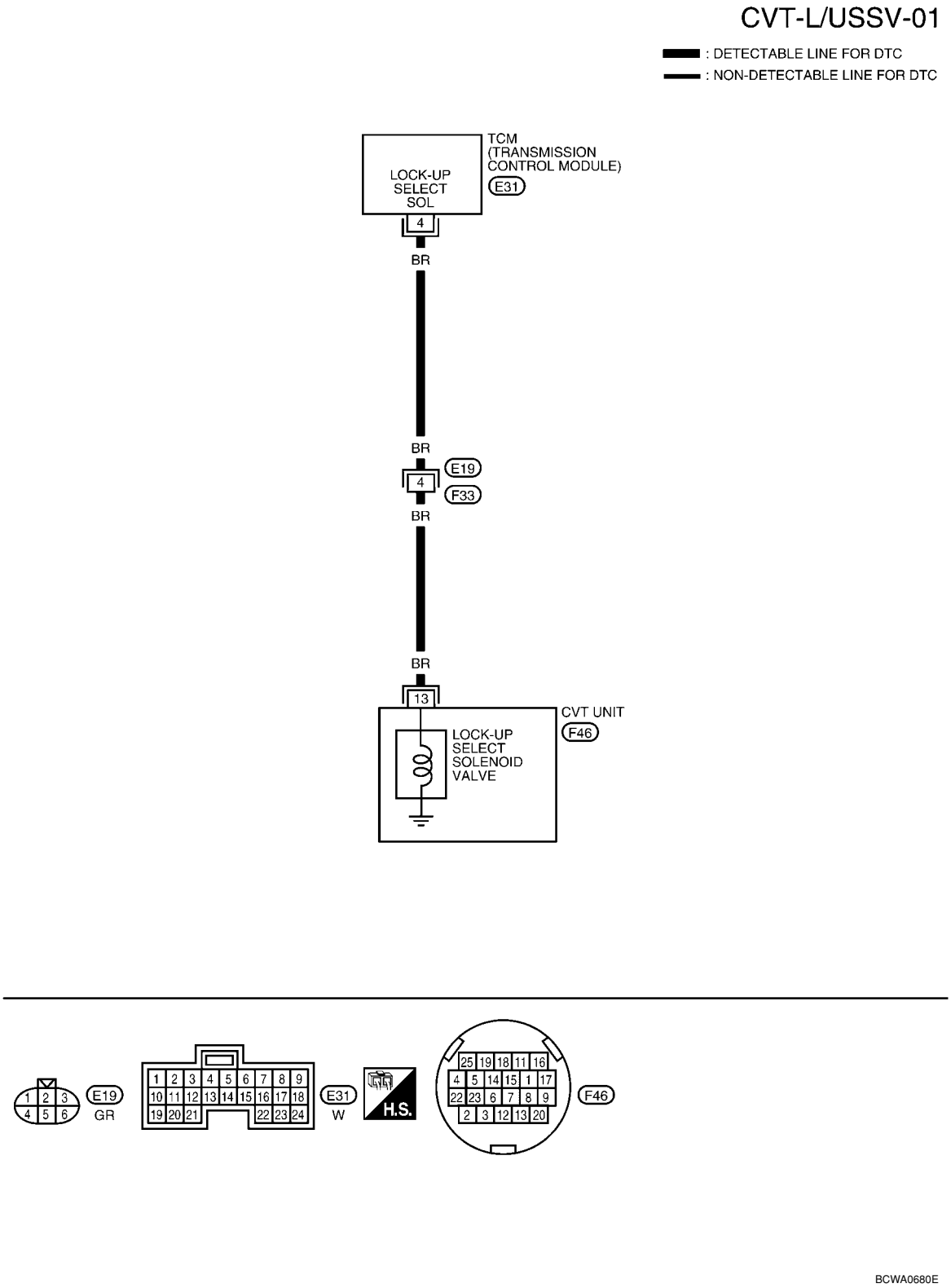

TCM TERMINALS AND REFERENCE VALUES

Refer to CVT-45, "TCM Terminal and Reference Value".

Diagnosis Procedure

INFOID:0000000001703633

1. CHECK INPUT SIGNAL

With CONSULT-III

1. Turn ignition switch ON.
2. Select “SELECTION FROM MENU” in “DATA MONITOR” mode for “TRANSMISSION” with CONSULT-III.
3. Read out the value of “LUSEL SOL OUT”.

Item name	Condition	Display value
LUSEL SOL OUT	Selector lever in “P” and “N” positions	ON
	Wait at least for 5 seconds with the selector lever in “R”, “D” and “L” positions	OFF

Without CONSULT-III

1. Turn ignition switch ON.
2. Check voltage between TCM connector terminal and ground.

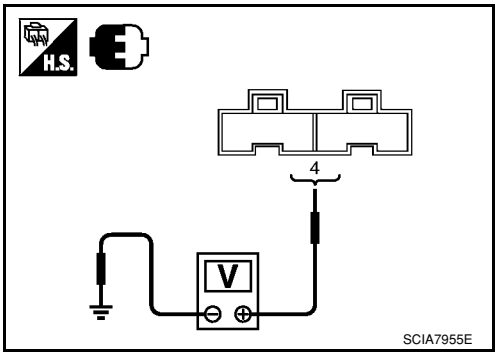

Name	Connector	Terminal	Condition	Voltage (Approx.)
Lock-up select solenoid valve	E31	4 - Ground	Selector lever in “P” and “N” positions	Battery voltage
			Wait at least for 5 seconds with the selector lever in “R”, “D” and “L” positions	0 V

3. Turn ignition switch OFF.
4. Disconnect the TCM connector.
5. Check if there is continuity between connector terminal and ground.

OK or NG

OK >> GO TO 5.
NG >> GO TO 2.

2. CHECK LOCK-UP SELECT SOLENOID VALVE CIRCUIT

1. Turn ignition switch OFF.
2. Disconnect TCM connector.
3. Check resistance between TCM connector terminal and ground.

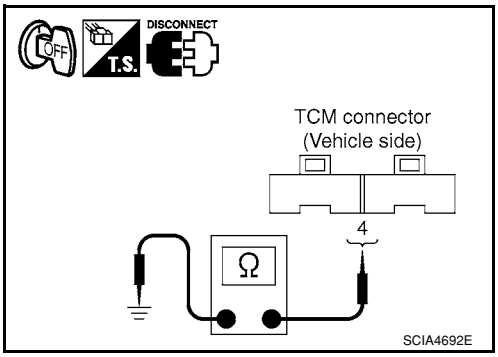

Solenoid valve	Connector	Terminal	Resistance (Approx.)
Lock-up select solenoid valve	E31	4 - Ground	6 - 19 Ω

OK or NG

OK >> GO TO 5.
NG >> GO TO 3.

3. CHECK VALVE RESISTANCE

1. Turn ignition switch OFF.
2. Disconnect CVT unit harness connector.

3. Check resistance between CVT unit harness connector terminal and ground.

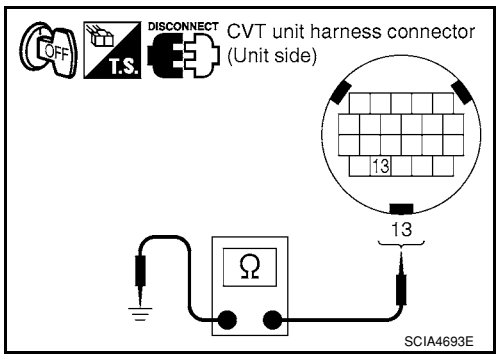

Solenoid valve	Connector	Terminal	Resistance (Approx.)
Lock-up select solenoid valve	F46	13 - Ground	6 - 19 Ω

OK or NG

OK >> GO TO 4.
NG >> Replace the transaxle assembly. Refer to CVT-178, "Removal and Installation" .

4. CHECK HARNESS BETWEEN TCM AND LOCK-UP SELECT SOLENOID VALVE

1. Turn ignition switch OFF.
2. Disconnect TCM connector.
3. Check continuity between TCM connector terminal and CVT unit harness connector terminal.

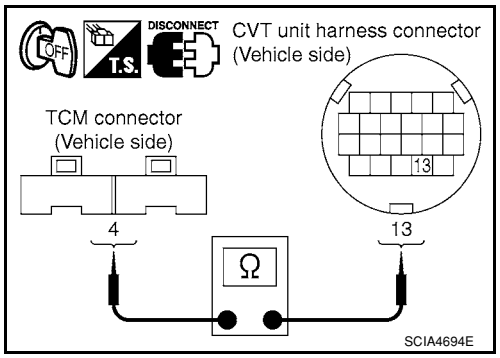

Item	Connector	Terminal	Continuity
TCM	E31	4	Yes
CVT unit harness connector	F46	13	

4. If OK, check harness for short to ground and short to power.
5. Reinstall any part removed.

OK or NG

OK >> GO TO 5.
NG >> Repair open circuit or short to ground or short to power in harness or connectors.

5. CHECK DTC

Perform CVT-132, "DTC Confirmation Procedure" .

OK or NG

OK >> **INSPECTION END**
NG >> GO TO 6.

6. CHECK TCM

1. Check TCM input/output signals. Refer to CVT-45, "TCM Terminal and Reference Value" .
2. If NG, re-check TCM pin terminals for damage or loose connection with harness connector.

OK or NG

OK >> **INSPECTION END**
NG >> 1. Repair or replace damaged parts.
2. Replace TCM. Refer to CVT-8, "Service After Replacing TCM and Transaxle Assembly" .

Component Inspection

INFOID:0000000001703634

LOCK-UP SELECT SOLENOID VALVE

1. Turn ignition switch OFF.
2. Disconnect CVT unit harness connector.
3. Check resistance between CVT unit harness connector terminal and ground.

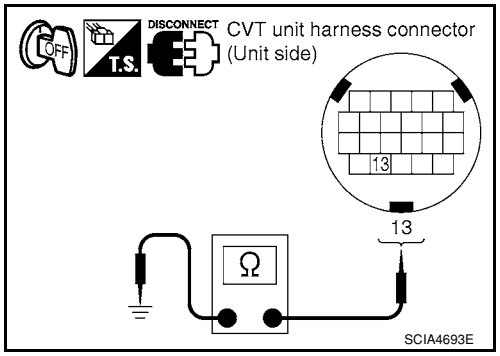

Solenoid valve	Connector	Terminal	Resistance (Approx.)
Lock-up select solenoid valve	F46	13 - Ground	6 - 19 Ω

4. If NG, replace the transaxle assembly. Refer to CVT-178, "Removal and Installation" .

DTC P1745 LINE PRESSURE CONTROL

Description

INFOID:0000000001703635

The pressure control solenoid valve A (line pressure solenoid valve) regulates the oil pump discharge pressure to suit the driving condition in response to a signal sent from the TCM.

On Board Diagnosis Logic

INFOID:0000000001703636

- This is not an OBD-II self-diagnostic item.
- Diagnostic trouble code “P1745 L/PRESS CONTROL” with CONSULT-III is detected when TCM detects the unexpected line pressure.

Possible Cause

INFOID:0000000001703637

TCM

DTC Confirmation Procedure

INFOID:0000000001703638

NOTE:
If “DTC Confirmation Procedure” has been previously performed, always turn ignition switch OFF and wait at least 10 seconds before performing the next test.
After the repair, touch “ERASE” on “SELF-DIAG RESULTS” and then perform the following procedure to confirm the malfunction is eliminated.

WITH CONSULT-III

1. Turn ignition switch ON and select “DATA MONITOR” mode for “TRANSMISSION” with CONSULT-III.
2. Make sure that output voltage of CVT fluid temperature sensor is within the range below.
   ATF TEMP SEN: 1.0 - 2.0 V
   If out of range, drive the vehicle to decrease the voltage (warm up the fluid) or stop engine to increase the voltage (cool down the fluid)
3. If DTC is detected, go to CVT-136, "Diagnosis Procedure" .

Diagnosis Procedure

INFOID:0000000001703639

1.CHECK DTC

1. Turn ignition switch ON. (Do not start engine.)
2. Select “SELF-DIAG RESULTS” mode for “TRANSMISSION” with CONSULT-III.
3. Erase self-diagnostic results. Refer to CVT-26, "OBD-II Diagnostic Trouble Code (DTC)".
4. Turn ignition switch OFF, and wait for 10 seconds or more.
5. Start engine.
6. Confirm self-diagnostic results again. Refer to CVT-47, "CONSULT-III Function (TRANSMISSION)" .

Is the “P1745 L/PRESS CONTROL” displayed?

YES >> Replace TCM. Refer to CVT-8, "Service After Replacing TCM and Transaxle Assembly" .
NO >> **INSPECTION END**

DTC P1777 STEP MOTOR - CIRCUIT

Description

INFOID:0000000001703640

- The step motor is included in the control valve assembly.
- The step motor changes the step with turning 4 coils ON/OFF according to the signal from TCM. As a result, the flow of line pressure to primary pulley is changed and pulley ratio is controlled

CONSULT-III Reference Value in Data Monitor Mode

INFOID:0000000001703641

Remarks: Specification data are reference values.

Item name	Condition	Display value (Approx.)
STM STEP	During driving	–20 step - 180 step
SMCOIL A		Changes ON⇔OFF.
SMCOIL B		
SMCOIL C		
SMCOIL D		

On Board Diagnosis Logic

INFOID:0000000001703642

- This is an OBD-II self-diagnostic item.
- Diagnostic trouble code “P1777 STEP MOTR CIRC” with CONSULT-III is detected under the following conditions.
- When operating step motor ON and OFF, there is no proper change in the voltage of TCM terminal which corresponds to it.

Possible Cause

INFOID:0000000001703643

- Step motor
- Harness or connectors
  (Step motor circuit is open or shorted.)

DTC Confirmation Procedure

INFOID:0000000001703644

CAUTION:
Always drive vehicle at a safe speed.
NOTE:
If “DTC Confirmation Procedure” has been previously performed, always turn ignition switch OFF and wait at least 10 seconds before performing the next test.
After the repair, touch “ERASE” on “SELF-DIAG RESULTS” and then perform the following procedure to confirm the malfunction is eliminated.

WITH CONSULT-III

1. Turn ignition switch ON and select “DATA MONITOR” mode for “TRANSMISSION” with CONSULT-III.
2. Drive vehicle for at least 5 consecutive seconds.
3. If DTC is detected, go to CVT-139, "Diagnosis Procedure" .

WITH GST

Follow the procedure “WITH CONSULT-III”.

Wiring Diagram - CVT - STM

INFOID:0000000001703645

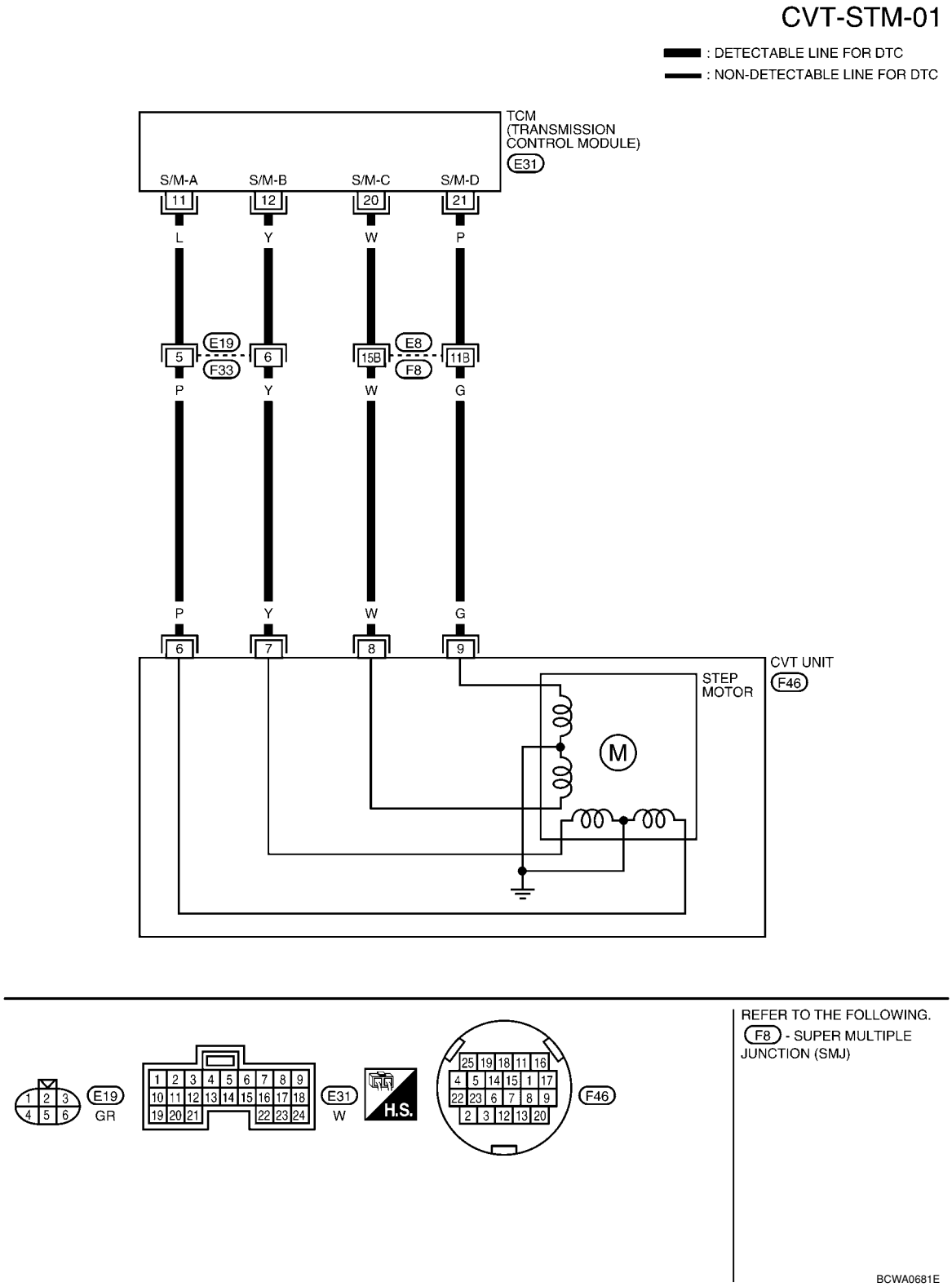

TCM TERMINALS AND REFERENCE VALUES

Refer to CVT-45, "TCM Terminal and Reference Value".

Diagnosis Procedure

INFOID:0000000001703646

1. CHECK INPUT SIGNALS

With CONSULT-III

1. Start engine.
2. Select “SELECTION FROM MENU” in “DATA MONITOR” mode for “TRANSMISSION” with CONSULT-III.
3. Start vehicle and read out the value of “STM STEP”, “SMCOIL A”, “SMCOIL B”, “SMCOIL C”, and “SMCOIL D”.

Item name	Condition	Display value (Approx.)
STM STEP	During driving	–20 step - 180 step
SMCOIL A		Changes ON⇔OFF.
SMCOIL B		
SMCOIL C		
SMCOIL D		

OK or NG

OK >> GO TO 4.
NG >> GO TO 2.

2. CHECK HARNESS BETWEEN TCM AND STEP MOTOR

1. Turn ignition switch OFF.
2. Disconnect CVT unit connector and TCM connector.
3. Check continuity between TCM connector terminals and CVT unit harness connector terminals.

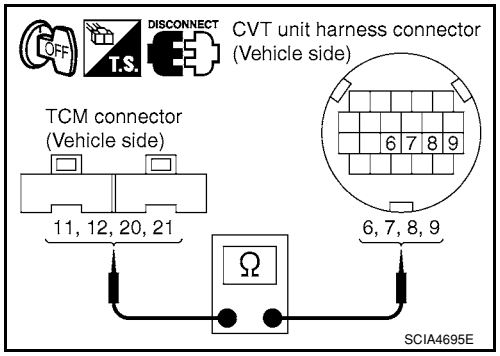

Item	Connector	Terminal	Continuity
TCM	E31	11	Yes
CVT unit harness connector	F46	6	
TCM	E31	12	Yes
CVT unit harness connector	F46	7	
TCM	E31	20	Yes
CVT unit harness connector	F46	8	
TCM	E31	21	Yes
CVT unit harness connector	F46	9	

4. If OK, check harness for short to ground and short to power.
5. If OK, check continuity between body ground and CVT assembly.
6. Reinstall any part removed.

OK or NG

OK >> GO TO 3.
NG >> Repair open circuit or short to ground or short to power in harness or connectors.

3. CHECK STEP MOTOR

Check step motor. Refer to CVT-140, "Component Inspection" .

OK or NG

OK >> GO TO 4.
NG >> Repair or replace damaged parts.

4. CHECK DTC

Perform CVT-137, "DTC Confirmation Procedure" .

OK or NG

OK >> **INSPECTION END**
NG >> GO TO 5.

5. CHECK TCM

1. Check TCM input/output signals. Refer to CVT-45, "TCM Terminal and Reference Value" .
2. If NG, re-check TCM pin terminals for damage or loose connection with harness connector.

OK or NG

OK >> **INSPECTION END**
NG >> Repair or replace damaged parts.

Component Inspection

INFOID:0000000001703647

STEP MOTOR

1. Turn ignition switch OFF.
2. Disconnect CVT unit harness connector.
3. Check resistance between CVT unit harness connector terminals and ground.

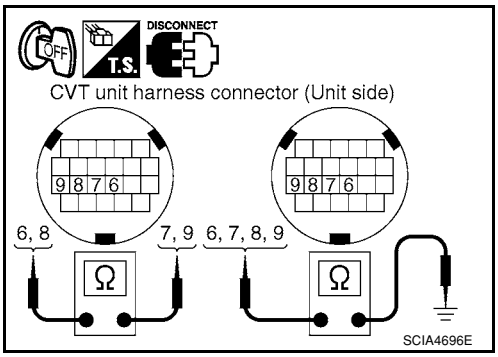

Name	Connector	Terminal	Resistance (Approx.)
Step motor	F46	6 - 7	30 Ω
		8 - 9	
		6 - Ground	15 Ω
		7 - Ground	
		8 - Ground	
		9 - Ground	

4. If NG, replace the transaxle assembly. Refer to CVT-178, "Removal and Installation" .

DTC P1778 STEP MOTOR - FUNCTION

Description

INFOID:0000000001703648

- The step motor is included in the control valve assembly.
- The step motor's 4 aspects of ON/OFF change according to the signal from TCM. As a result, the flow of line pressure to primary pulley is changed and pulley ratio is controlled.
- This diagnosis item is detected when electrical system is OK, but mechanical system is NG.
- This diagnosis item is detected when the state of the changing the speed mechanism in unit does not operate normally.

CONSULT-III Reference Value in Data Monitor Mode

INFOID:0000000001703649

Remarks: Specification data are reference values.

Item name	Condition	Display value (Approx.)
STM STEP	During driving	–20 step - 180 step
GEAR RATIO		2.56 - 0.43

On Board Diagnosis Logic

INFOID:0000000001703650

- This is an OBD-II self-diagnostic item.
- Diagnostic trouble code “P1778 STEP MOTR/FNC” with CONSULT-III is detected under the following conditions.
- When not changing the pulley ratio according to the instruction of TCM.

Possible Cause

INFOID:0000000001703651

Step motor

DTC Confirmation Procedure

INFOID:0000000001703652

CAUTION:
- **Always drive vehicle at a safe speed.**
- **Before starting “DTC Confirmation Procedure”, confirm “Hi” or “Mid” or “Low” fixation by “PRI SPEED” and “VEHICLE SPEED” on “DATA MONITOR MODE”.**
- **If hi-geared fixation occurred, go to CVT-142, "Diagnosis Procedure".**

NOTE:
If “DTC Confirmation Procedure” has been previously performed, always turn ignition switch OFF and wait at least 10 seconds before performing the next test.
After the repair, touch “ERASE” on “SELF-DIAG RESULTS” and then perform the following procedure to confirm the malfunction is eliminated.

WITH CONSULT-III

1. Turn ignition switch ON and select “DATA MONITOR” mode for “TRANSMISSION” with CONSULT-III.
2. Make sure that output voltage of CVT fluid temperature sensor is within the range below.
   ATF TEMP SEN: 1.0 - 2.0 V
   If out of range, drive the vehicle to decrease the voltage (warm up the fluid) or stop engine to increase the voltage (cool down the fluid)
3. Select “DATA MONITOR” mode for “TRANSMISSION” with CONSULT-III.
4. Start engine and maintain the following conditions for at least 30 consecutive seconds.
   TEST START FROM 0 km/h (0 MPH)
   CONSTANT ACCELERATION: Keep 30 sec or more
   VEHICLE SPEED: 10 km/h (6 MPH) or more
   ACC PEDAL OPEN: More than 1.0/8
   RANGE: “D” position
   ENG SPEED: 450 rpm or more
5. If DTC is detected, go to CVT-142, "Diagnosis Procedure".

WITH GST

Follow the procedure “WITH CONSULT-III”.

Diagnosis Procedure

INFOID:0000000001703653

1. CHECK STEP MOTOR

With CONSULT-III

It is monitoring whether “GEAR RATIO: 2.56 - 0.43” changes similarly to “STM STEP: –20 - 180” by DATA MONITOR mode. Refer to CVT-47, "CONSULT-III Function (TRANSMISSION)".

Without CONSULT-III

Inspect the engine speed (rise and descend), vehicle speed, throttle position, and check shift change. Refer to CVT-181, "Vehicle Speed When Shifting Gears".

OK or NG

OK >> **INSPECTION END**

NG >> Replace the transaxle assembly. Refer to CVT-178, "Removal and Installation".

OVERDRIVE CONTROL SWITCH

Description

INFOID:0000000001703654

- Overdrive control switch is installed to the selector lever.
- O/D OFF indicator turns ON, and overdrive driving activates when pressing the overdrive control switch while driving in “D” position. O/D OFF indicator turns OFF, and “D” position driving starts when pressing the overdrive control switch while driving in the overdrive-off mode. Shifting the selector lever in any position other than “D” releases the overdrive-off mode.

CONSULT-III Reference Value in Data Monitor Mode

INFOID:0000000001703655

Item name	Condition	Display value
SPORT MODE SW	While pushing overdrive cancel switch	ON
	Other conditions	OFF

Wiring Diagram - CVT - ODSW

INFOID:0000000001703656

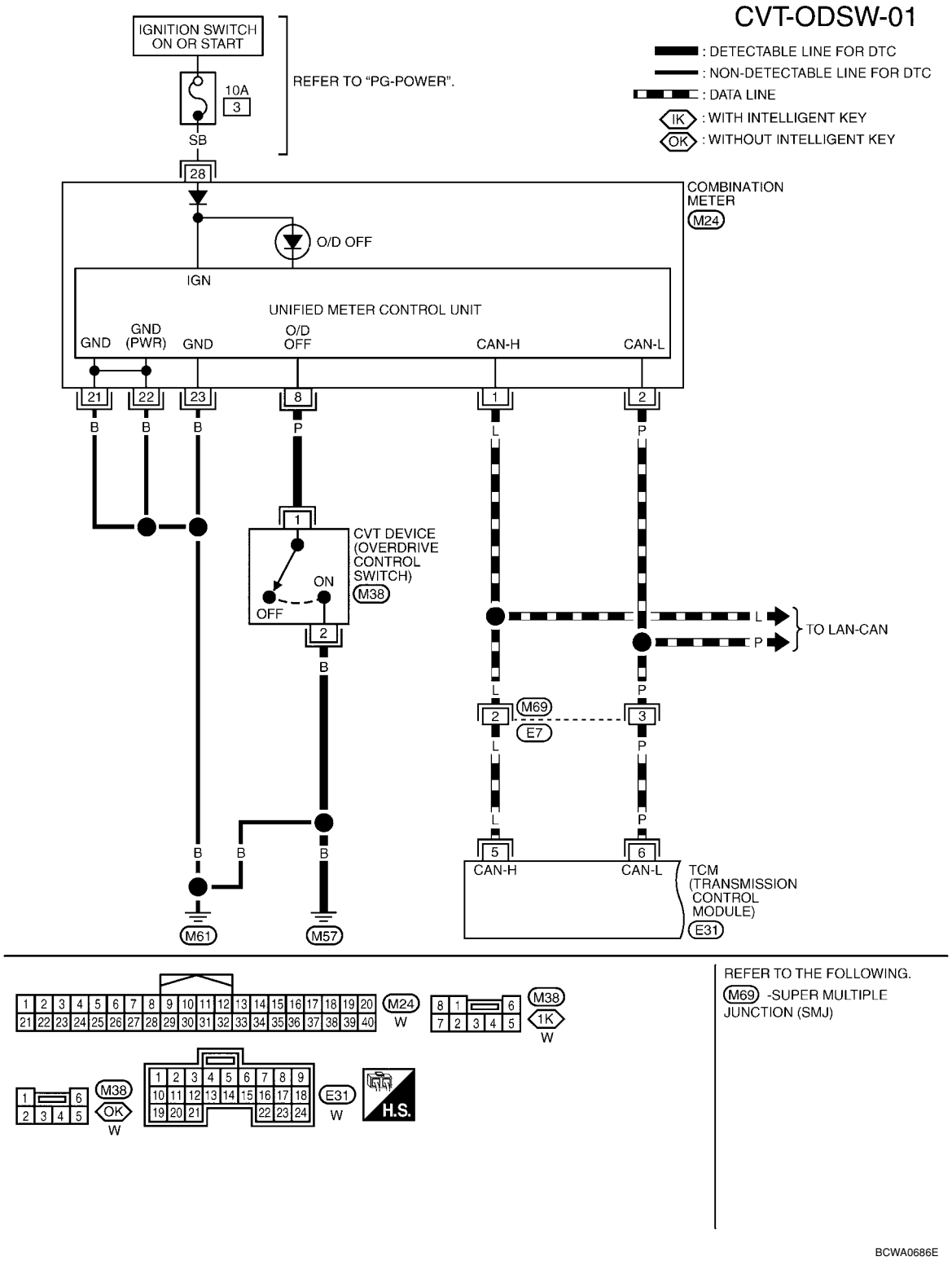

TCM TERMINALS AND REFERENCE VALUES

Refer to CVT-45, "TCM Terminal and Reference Value".

Diagnosis Procedure

INFOID:0000000001703657

1. CHECK CAN COMMUNICATION LINE

Perform the self-diagnosis check. Refer to CVT-47, "CONSULT-III Function (TRANSMISSION)".

Is any malfunction of the "U1000 CAN COMM CIRCUIT" indicated in the results?

YES >> Check CAN communication line. Refer to CVT-56.
NO >> GO TO 2.

2. CHECK OVERDRIVE CONTROL SWITCH SIGNAL

With CONSULT-III

1. Turn ignition switch ON.
2. Select "ECU INPUT SIGNALS" in "DATA MONITOR" mode for "TRANSMISSION" with CONSULT-III.
3. Read out ON/OFF switching action of the "SPORT MODE SW".

Item name	Condition	Display value
SPORT MODE SW	While pushing overdrive cancel switch	ON
	Other conditions	OFF

OK or NG

OK >> **INSPECTION END**
NG >> GO TO 3.

3. CHECK OVERDRIVE CONTROL SWITCH

Check overdrive control switch. Refer to CVT-146, "Component Inspection"

OK or NG

OK >> GO TO 4.
NG >> Repair or replace damaged parts.

4. CHECK SELF-DIAGNOSTIC RESULTS (COMBINATION METER)

Perform self-diagnosis check. Refer to DI-11, "Self-Diagnosis Mode of Combination Meter".

Is any malfunction detected by self-diagnostic?

YES >> Check the malfunctioning system.
NO - 1 >> With intelligent key: GO TO 5.
NO - 2 >> Without intelligent key: GO TO 6.

5. CHECK OVERDRIVE CONTROL SWITCH CIRCUIT

1. Turn ignition switch OFF.
2. Disconnect CVT device connector and combination meter connector.
3. Check continuity between CVT device harness connector (A) terminal and combination meter harness connector (B) terminal.

Item	Connector	Terminal	Continuity
CVT device harness connector	M38	1	Yes
Combination meter harness connector	M24	8	

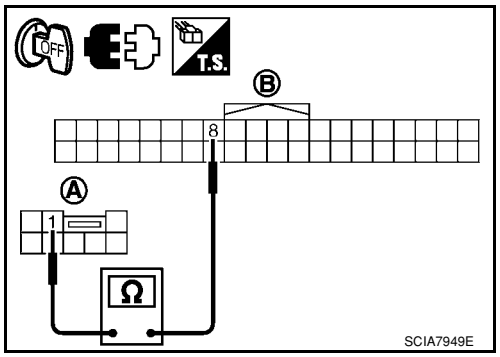

4. Check continuity between CVT device harness connector terminal and ground.

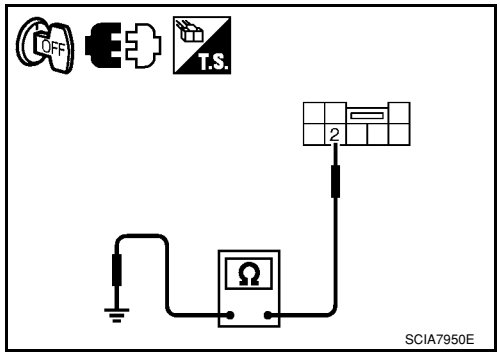

Item	Connector	Terminal	Continuity
CVT device harness connector	M38	2 - ground	Yes

5. If OK, check harness for short to ground and short to power.
6. Reinstall any part removed.

OK or NG

OK >> **INSPECTION END**
NG >> Repair open circuit or short to ground or short to power in harness or connectors.

6. CHECK OVERDRIVE CONTROL SWITCH CIRCUIT

1. Turn ignition switch OFF.
2. Disconnect CVT device connector and combination meter connector.
3. Check continuity between CVT device harness connector (A) terminal and combination meter harness connector (B) terminal.

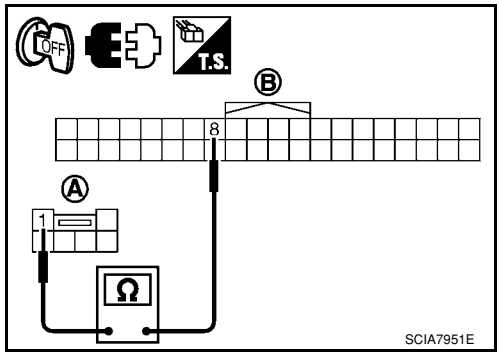

Item	Connector	Terminal	Continuity
CVT device harness connector	M38	1	Yes
Combination meter harness connector	M24	8	

4. Check continuity between CVT device harness connector terminal and ground.

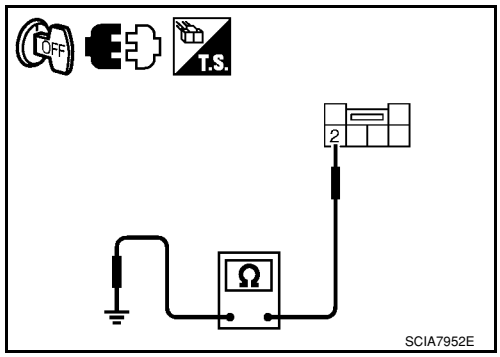

Item	Connector	Terminal	Continuity
CVT device harness connector	M38	2 - ground	Yes

5. If OK, check harness for short to ground and short to power.
6. Reinstall any part removed.

OK or NG

OK >> **INSPECTION END**
NG >> Repair open circuit or short to ground or short to power in harness or connectors.

Component Inspection

INFOID:0000000001703658

OVERDRIVE CONTROL SWITCH

With Intelligent Key

Check continuity between CVT device harness connector terminals.

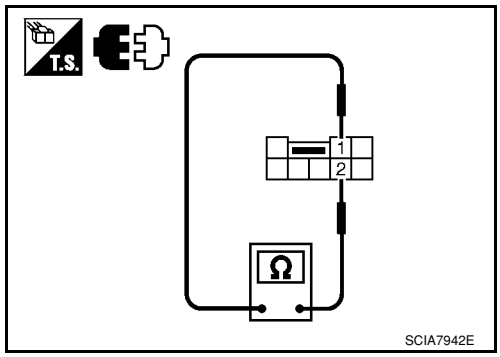

Item	Condition	Connector	Terminal	Continuity
Overdrive control switch	While pushing overdrive control switch	M38	1 - 2	Yes
	Other conditions			No

Without Intelligent Key

Check continuity between CVT device harness connector terminals.

Item	Condition	Connector	Terminal	Continuity
Overdrive control switch	While pushing overdrive control switch	M38	1 - 2	Yes
	Other conditions			No

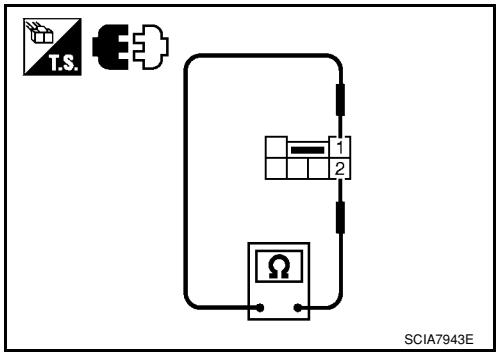

SHIFT POSITION INDICATOR CIRCUIT

Description

INFOID:0000000001703659

TCM sends the switch signals to combination meter via CAN communication line. Then selector lever position is indicated on the shift position indicator.

CONSULT-III Reference Value in Data Monitor Mode

INFOID:0000000001703660

Item name	Condition	Display value
RANGE	Selector lever in “N” or “P” position.	N·P
	Selector lever in “R” position.	R
	Selector lever in “D” position.	D
	Selector lever in “L” position.	L

Diagnosis Procedure

INFOID:0000000001703661

1.CHECK INPUT SIGNALS

With CONSULT-III

1. Start engine.
2. Select “MAIN SIGNALS” in “DATA MONITOR” mode for “TRANSMISSION” with CONSULT-III and read out the value of “RANGE”.
3. Check that the following three positions or indicators are same.

- Actual position of the selector lever
- “RANGE” on CONSULT-III screen
- Shift position indicator in the combination meter

OK or NG

OK >> **INSPECTION END**
NG >> Check the following.

SHIFT POSITION INDICATOR SYMPTOM CHART

Items	Presumed location of trouble
Actual position does not change.	Park/neutral position switch • Refer to CVT-65. CVT main system (Fail-safe function actuated) • Refer to CVT-47, "CONSULT-III Function (TRANSMISSION)".
Shift position indicator in the combination meter does not indicate any position.	Perform the self-diagnosis for CVT and the combination meter. • Refer to CVT-47, "CONSULT-III Function (TRANSMISSION)" and DI-4.
Actual position changes, but the shift position indicator in the combination meter does not change.	
Actual position differs from the shift position indicator in the combination meter.	
Shift position indicator in the combination meter does not indicate specific position only.	Check the combination meter. • Refer to DI-4.

TROUBLE DIAGNOSIS FOR SYMPTOMS

Wiring Diagram - CVT - NONDTC

INFOID:0000000001703662

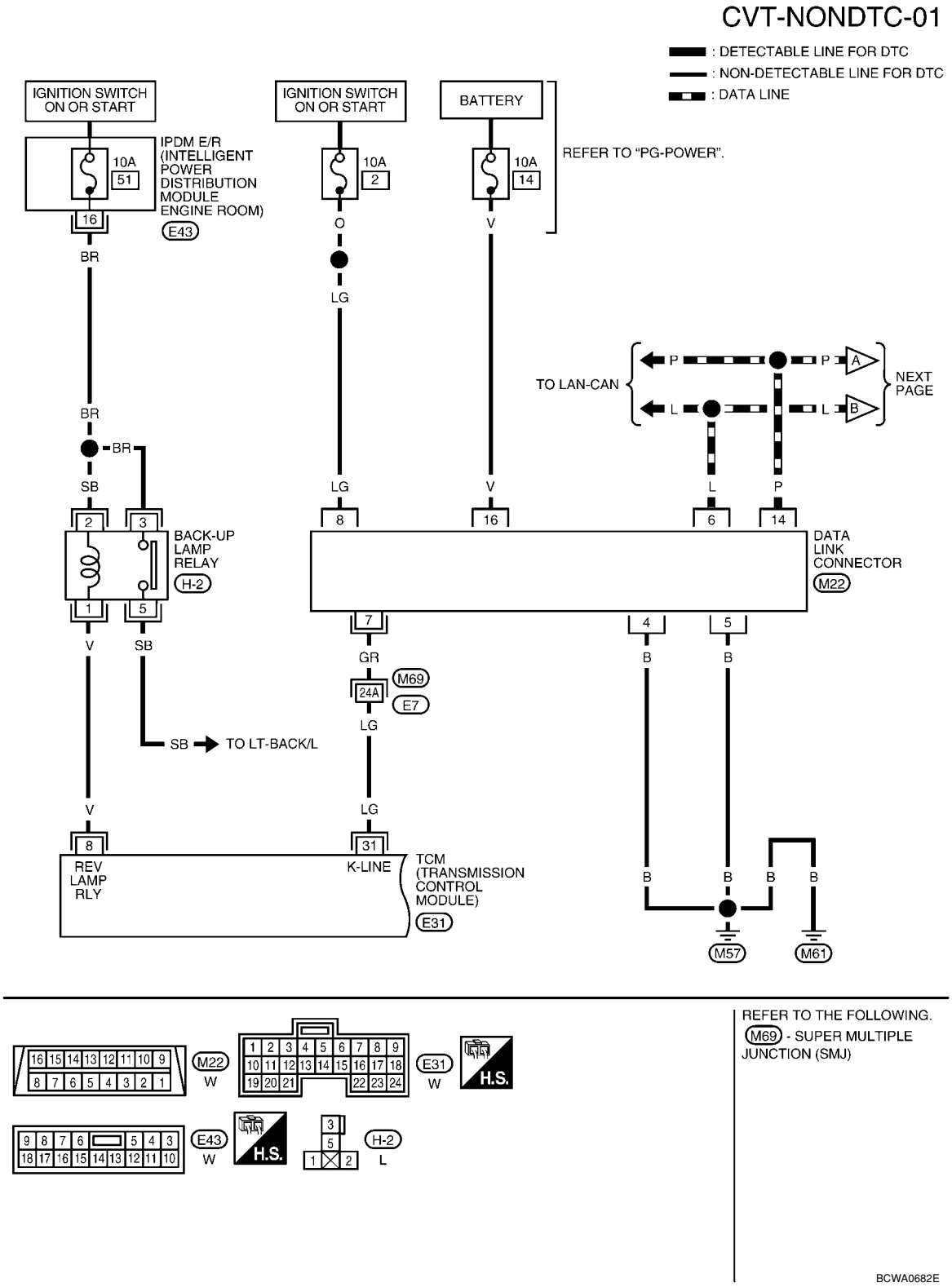

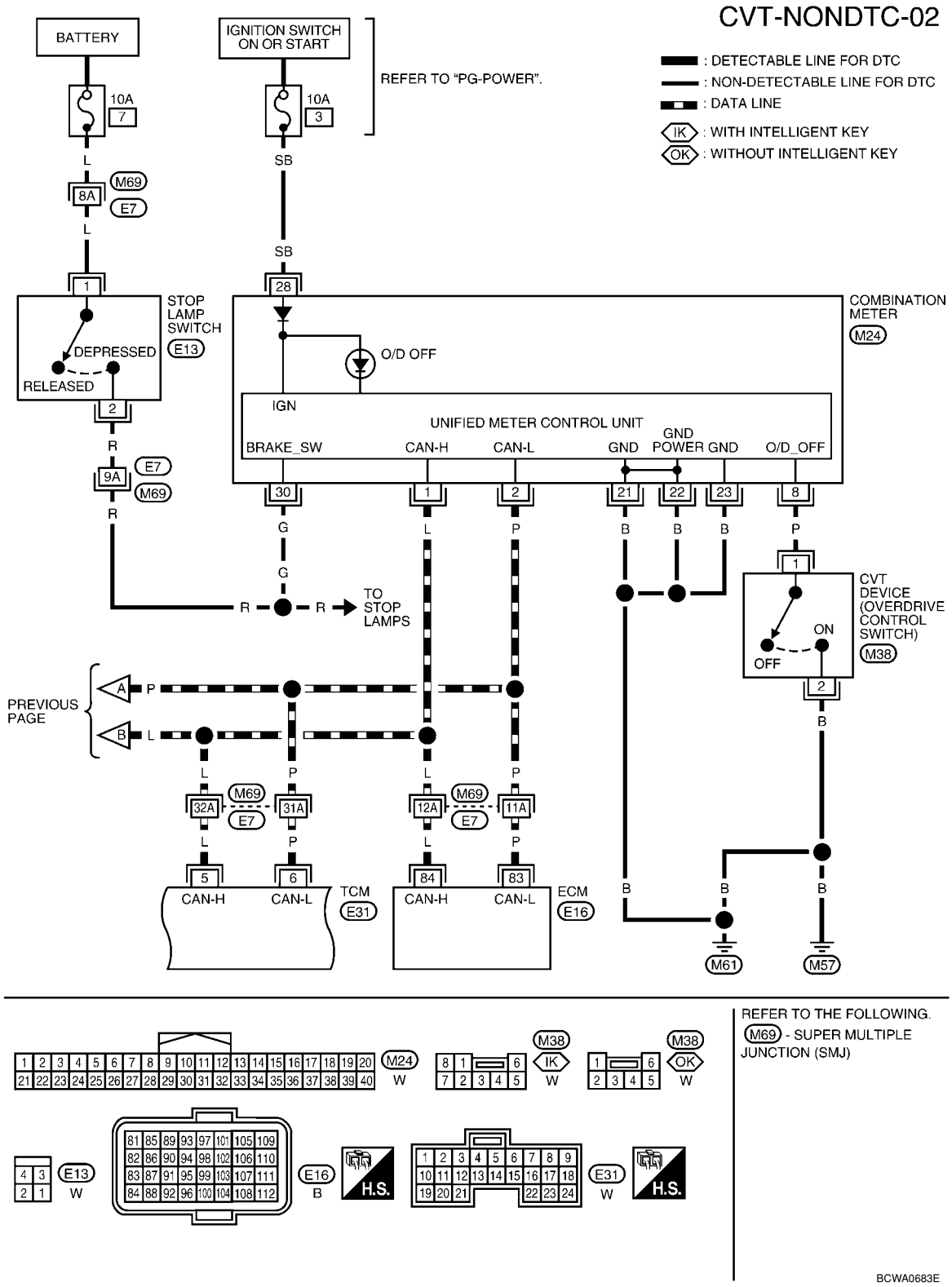
CVT-NONDTC-02
: DETECTABLE LINE FOR DTC
: NON-DETECTABLE LINE FOR DTC
: DATA LINE
IK : WITH INTELLIGENT KEY
OK : WITHOUT INTELLIGENT KEY
BATTERY
IGNITION SWITCH ON OR START
REFER TO "PG-POWER".
10A 7
10A 3
L
SB
M69
8A
E7
STOP LAMP SWITCH
E13
DEPRESSED
RELEASED
COMBINATION METER
M24
O/D OFF
IGN
UNIFIED METER CONTROL UNIT
BRAKE_SW
CAN-H
CAN-L
GND
GND POWER GND
O/D_OFF
R
9A
G
TO STOP LAMPS
CVT DEVICE (OVERDRIVE CONTROL SWITCH)
M38
ON
OFF
PREVIOUS PAGE
A
B
P
32A
31A
12A
11A
TCM
E31
ECM
E16
M61
M57
REFER TO THE FOLLOWING.
M69 - SUPER MULTIPLE JUNCTION (SMJ)
H.S.
BCWA0683E

CVT-NONDTC-03

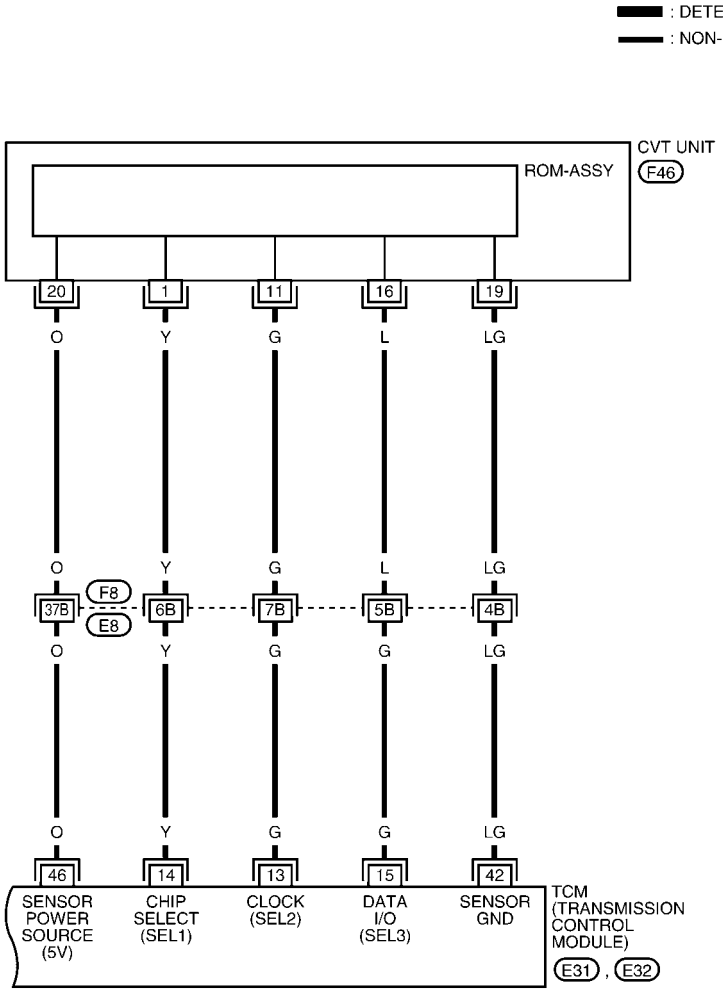

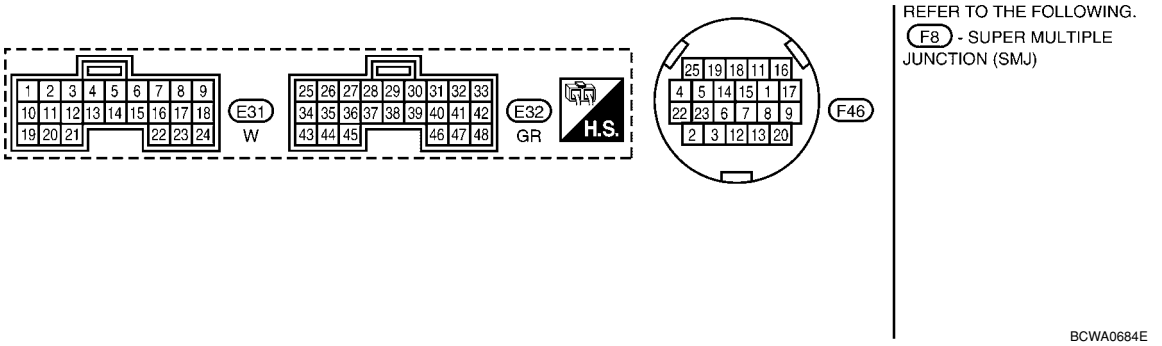

TCM TERMINALS AND REFERENCE VALUES

Refer to CVT-45, "TCM Terminal and Reference Value".

O/D OFF Indicator Lamp Does Not Come On

INFOID:0000000001703663

SYMPTOM:

O/D OFF indicator lamp does not come on for about 2 seconds when turning ignition switch ON.

DIAGNOSTIC PROCEDURE

1. CHECK CAN COMMUNICATION LINE

Perform the self-diagnosis check. Refer to CVT-47, "CONSULT-III Function (TRANSMISSION)".

Is any malfunction of the "U1000 CAN COMM CIRCUIT" indicated in the results?

YES >> Check CAN communication line. Refer to CVT-56.
NO >> GO TO 2.

2. CHECK TCM POWER SOURCE

1. Turn ignition switch ON.
2. Check voltage between TCM connector terminals and ground. Refer to CVT-122, "Wiring Diagram - CVT - POWER".

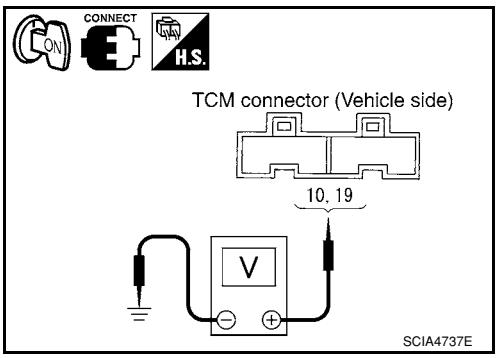

Name	Connector	Terminal	Voltage (Approx.)
Power supply	E31	10	Battery voltage
		19	Battery voltage

OK or NG

OK >> GO TO 4.
NG >> GO TO 3.

3. DETECT MALFUNCTIONING ITEM

Check the following.
- Harness for short or open between ignition switch and TCM connector terminal 10, 19
  Refer to CVT-122, "Wiring Diagram - CVT - POWER".
- 10 A fuse (No.49, located in the IPDM E/R). Refer to CVT-122, "Wiring Diagram - CVT - POWER".
- Ignition switch. Refer to PG-3.

OK or NG

OK >> GO TO 4.
NG >> Repair or replace damaged parts.

4. CHECK TCM GROUND CIRCUIT

1. Turn ignition switch OFF.
2. Disconnect TCM connector.
3. Check continuity between TCM connector terminals and ground. Refer to CVT-122, "Wiring Diagram - CVT - POWER".

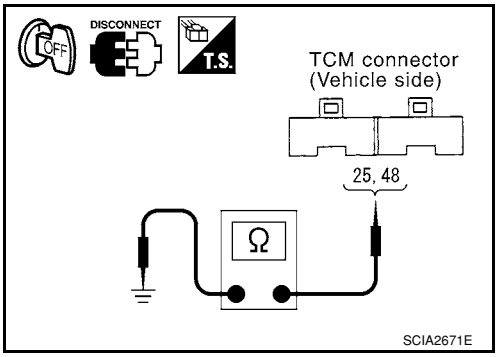

Name	Connector	Terminal	Continuity
Ground	E32	25	Yes
		48	

OK or NG

OK >> GO TO 5.
NG >> Repair open circuit or short to ground or short to power in harness or connectors.

5. DETECT MALFUNCTIONING ITEM

Check the following.
- Harness and fuse for short or open between ignition switch and O/D OFF indicator lamp
  Refer to PG-3.

OK or NG

OK >> GO TO 6.
NG >> Repair or replace damaged parts.

6. CHECK SYMPTOM

Check again. Refer to CVT-41, "Check before Engine Is Started".

OK or NG

OK >> **INSPECTION END**
NG >> GO TO 7.

7. CHECK COMBINATION METERS

Check combination meters. Refer to DI-4

OK or NG

OK >> **INSPECTION END**
NG >> Repair or replace damaged parts.

Engine Cannot Be Started in "P" and "N" Position

INFOID:0000000001703664

SYMPTOM:

- **Engine cannot be started with selector lever in “P” or “N” position.**
- **Engine can be started with selector lever in “D”, “L” or “R” position.**

DIAGNOSTIC PROCEDURE

1. CHECK SELF-DIAGNOSTIC RESULTS

Perform self-diagnosis check. Refer to CVT-47, "CONSULT-III Function (TRANSMISSION)".

Do the self-diagnostic results indicate PNP switch circuit or start signal circuit?

YES >> Check PNP switch circuit or start signal circuit. Refer to CVT-65 or CVT-60.
NO >> GO TO 2.

2. CHECK CVT POSITION

Check CVT position. Refer to CVT-171, "Checking of CVT Position"

OK or NG

OK >> GO TO 3.
NG >> Adjust CVT position. Refer to CVT-171, "Adjustment of CVT Position".

3. CHECK STARTING SYSTEM

Check starting system. Refer to SC-8.

OK or NG

OK >> **INSPECTION END**
NG >> Repair or replace damaged parts.

In "P" Position, Vehicle Moves Forward or Backward When Pushed

INFOID:0000000001703665

SYMPTOM:

Vehicle moves when it is pushed forward or backward with selector lever in “P” position.

DIAGNOSTIC PROCEDURE

1. CHECK SELF-DIAGNOSTIC RESULTS

Perform self-diagnosis check. Refer to CVT-47, "CONSULT-III Function (TRANSMISSION)".

Do the self-diagnostic results indicate PNP switch circuit?

YES >> Check PNP switch circuit. Refer to CVT-65.
NO >> GO TO 2.

2. CHECK CVT POSITION

Check CVT position. Refer to CVT-171, "Checking of CVT Position"

OK or NG

OK >> GO TO 3.
NG >> Adjust CVT position. Refer to CVT-171, "Adjustment of CVT Position".

3. CHECK SYMPTOM

Check again. Refer to CVT-41, "Check at Idle".

OK or NG

OK >> **INSPECTION END**
NG >> Replace the transaxle assembly. Refer to CVT-178, "Removal and Installation".

In "N" Position, Vehicle Moves

INFOID:0000000001703666

SYMPTOM:
Vehicle moves forward or backward when selecting “N” position.

DIAGNOSTIC PROCEDURE

1. CHECK SELF-DIAGNOSTIC RESULTS

Perform self-diagnosis check. Refer to CVT-47, "CONSULT-III Function (TRANSMISSION)".

Do the self-diagnostic results indicate PNP switch circuit?

YES >> Check PNP switch circuit. Refer to CVT-65.
NO >> GO TO 2.

2. CHECK CVT POSITION

Check CVT position. Refer to CVT-171, "Checking of CVT Position"

OK or NG

OK >> GO TO 3.
NG >> Adjust CVT position. Refer to CVT-171, "Adjustment of CVT Position".

3. CHECK CVT FLUID LEVEL

Check CVT fluid level. Refer to MA-19, "Checking CVT Fluid".

OK or NG

OK >> GO TO 4.
NG >> Refill CVT fluid.

4. CHECK SYMPTOM

Check again. Refer to CVT-41, "Check at Idle".

OK or NG

OK >> **INSPECTION END**
NG >> GO TO 5.

5. CHECK TCM

1. Check TCM input/output signals. Refer to CVT-45, "TCM Terminal and Reference Value".
2. If NG, re-check TCM pin terminals for damage or loose connection with harness connector.

OK or NG

OK >> Replace the transaxle assembly. Refer to CVT-178, "Removal and Installation".
NG >> Repair or replace damaged parts.

Large Shock "N" → "R" Position

INFOID:0000000001703667

SYMPTOM:
There is large shock when shifting from “N” to “R” position.

DIAGNOSTIC PROCEDURE

1. CHECK SELF-DIAGNOSTIC RESULTS

Perform self-diagnosis check. Refer to CVT-47, "CONSULT-III Function (TRANSMISSION)".

Is any malfunction detected by self-diagnosis?

YES >> Check the malfunctioning system. Refer to CVT-47, "CONSULT-III Function (TRANSMISSION)".
NO >> GO TO 2.

2. CHECK ENGINE IDLE SPEED

Check the engine idle speed. Refer to EC-73, "Idle Speed and Ignition Timing Check".

OK or NG

OK >> GO TO 3.
NG >> Repair.

3.CHECK CVT FLUID LEVEL

Check CVT fluid level. Refer to MA-19, "Checking CVT Fluid".

OK or NG

OK >> GO TO 4.
NG >> Refill CVT fluid.

4.CHECK LINE PRESSURE

Check line pressure at idle. Refer to CVT-36, "Inspections before Trouble Diagnosis".

OK or NG

OK >> GO TO 5.
NG >> Check the malfunctioning item. Refer to CVT-36, "Inspections before Trouble Diagnosis".

5.SYMPTOM CHECK

Check again. Refer to CVT-41, "Check at Idle".

OK or NG

OK >> **INSPECTION END**
NG >> GO TO 6.

6.CHECK TCM

1. Check TCM input/output signals. Refer to CVT-45, "TCM Terminal and Reference Value".
2. If NG, re-check TCM pin terminals for damage or loose connection with harness connector.

OK or NG

OK >> Replace the transaxle assembly. Refer to CVT-178, "Removal and Installation".
NG >> Repair or replace damaged parts.

Vehicle Does Not Creep Backward in "R" Position

INFOID:0000000001703668

SYMPTOM:

Vehicle does not creep backward when selecting “R” position.

DIAGNOSTIC PROCEDURE

1.CHECK SELF-DIAGNOSTIC RESULTS

Perform self-diagnosis check. Refer to CVT-47, "CONSULT-III Function (TRANSMISSION)".

Is any malfunction detected by self-diagnosis

YES >> Check the malfunctioning system. Refer to CVT-47, "CONSULT-III Function (TRANSMISSION)".
NO >> GO TO 2.

2.CHECK CVT POSITION

Check CVT position. Refer to CVT-171, "Checking of CVT Position"

OK or NG

OK >> GO TO 3.
NG >> Adjust CVT position. Refer to CVT-171, "Adjustment of CVT Position".

3.CHECK CVT FLUID LEVEL

Check CVT fluid level. Refer to MA-19, "Checking CVT Fluid".

OK or NG

OK >> GO TO 4.
NG >> Refill CVT fluid.

4.CHECK LINE PRESSURE

Check line pressure at idle. Refer to CVT-36, "Inspections before Trouble Diagnosis".

OK or NG

OK >> GO TO 5.

NG >> Check the malfunctioning item. Refer to CVT-36, "Inspections before Trouble Diagnosis".

5. CHECK STALL REVOLUTION

Check stall revolution. Refer to CVT-36, "Inspections before Trouble Diagnosis".

OK or NG

OK >> GO TO 6.
NG >> Check the malfunctioning item. Refer to CVT-36, "Inspections before Trouble Diagnosis".

6. CHECK SYMPTOM

Check again. Refer to CVT-41, "Check at Idle".

OK or NG

OK >> **INSPECTION END**
NG >> GO TO 7.

7. CHECK TCM

1. Check TCM input/output signals. Refer to CVT-45, "TCM Terminal and Reference Value".
2. If NG, re-check TCM pin terminals for damage or loose connection with harness connector.

OK or NG

OK >> Replace the transaxle assembly. Refer to CVT-178, "Removal and Installation".
NG >> Repair or replace damaged parts.

Vehicle Does Not Creep Forward in "D" or "L" Position

INFOID:0000000001703669

SYMPTOM:

Vehicle does not creep forward when selecting “D” or “L” position.

DIAGNOSTIC PROCEDURE

1. CHECK SELF-DIAGNOSTIC RESULTS

Perform self-diagnosis check. Refer to CVT-47, "CONSULT-III Function (TRANSMISSION)" .

Is any malfunction detected by self-diagnosis?

YES >> Check the malfunctioning system. Refer to CVT-47, "CONSULT-III Function (TRANSMISSION)" .
NO >> GO TO 2.

2. CHECK CVT POSITION

Check CVT position. Refer to CVT-171, "Checking of CVT Position"

OK or NG

OK >> GO TO 3.
NG >> Adjust CVT position. Refer to CVT-171, "Adjustment of CVT Position" .

3. CHECK CVT FLUID LEVEL

Check CVT fluid level. Refer to MA-19, "Checking CVT Fluid" .

OK or NG

OK >> GO TO 4.
NG >> Refill CVT fluid.

4. CHECK LINE PRESSURE

Check line pressure at idle. Refer to CVT-36, "Inspections before Trouble Diagnosis" .

OK or NG

OK >> GO TO 5.
NG >> Check the malfunctioning item. Refer to CVT-36, "Inspections before Trouble Diagnosis" .

5. CHECK STALL REVOLUTION

Check stall revolution. Refer to CVT-36, "Inspections before Trouble Diagnosis" .

OK or NG

OK >> GO TO 6.
NG >> Check the malfunctioning item. Refer to CVT-36, "Inspections before Trouble Diagnosis" .

6. CHECK SYMPTOM

Check again. Refer to CVT-41, "Check at Idle" .

OK or NG

OK >> **INSPECTION END**
NG >> GO TO 7.

7. CHECK TCM

1. Check TCM input/output signals. Refer to CVT-45, "TCM Terminal and Reference Value" .
2. If NG, re-check TCM pin terminals for damage or loose connection with harness connector.

OK or NG

OK >> Replace the transaxle assembly. Refer to CVT-178, "Removal and Installation" .
NG >> Repair or replace damaged parts.

Vehicle Speed Does Not Change in "L" Position

INFOID:0000000001703670

SYMPTOM:

Vehicle speed does not change in “L” position while the cruise test.

DIAGNOSTIC PROCEDURE

1. CHECK SELF-DIAGNOSTIC RESULTS

Perform self-diagnosis check. Refer to CVT-47, "CONSULT-III Function (TRANSMISSION)" .

Is any malfunction detected by self-diagnosis?

YES >> Check the malfunctioning system. Refer to CVT-47, "CONSULT-III Function (TRANSMISSION)" .
NO >> GO TO 2.

2. CHECK CVT POSITION

Check CVT position. Refer to CVT-171, "Checking of CVT Position"

OK or NG

OK >> GO TO 3.
NG >> Adjust CVT position. Refer to CVT-171, "Adjustment of CVT Position" .

3. CHECK CVT FLUID LEVEL

Check CVT fluid level. Refer to MA-19, "Checking CVT Fluid" .

OK or NG

OK >> GO TO 4.
NG >> Refill CVT fluid.

4. CHECK LINE PRESSURE

Check line pressure at idle. Refer to CVT-36, "Inspections before Trouble Diagnosis" .

OK or NG

OK >> GO TO 5.
NG >> Check the malfunctioning item. Refer to CVT-36, "Inspections before Trouble Diagnosis" .

5. CHECK STALL REVOLUTION

Check stall revolution. Refer to CVT-36, "Inspections before Trouble Diagnosis" .

OK or NG

OK >> GO TO 6.
NG >> Check the malfunctioning item. Refer to CVT-36, "Inspections before Trouble Diagnosis" .

6. CHECK SYMPTOM

Check again. Refer to CVT-43, "Cruise Test" .

OK or NG

OK >> **INSPECTION END**
NG >> GO TO 7.

7. CHECK TCM

1. Check TCM input/output signals. Refer to CVT-45, "TCM Terminal and Reference Value" .
2. If NG, re-check TCM pin terminals for damage or loose connection with harness connector.

OK or NG

OK >> Replace the transaxle assembly. Refer to CVT-178, "Removal and Installation" .
NG >> Repair or replace damaged parts.

Vehicle Speed Does Not Change in overdrive-off mode

INFOID:0000000001703671

SYMPTOM:

Vehicle speed does not change in overdrive-off mode while the cruise test.

DIAGNOSTIC PROCEDURE

1. CHECK SELF-DIAGNOSTIC RESULTS

Perform self-diagnosis check. Refer to CVT-47, "CONSULT-III Function (TRANSMISSION)" .

Is any malfunction detected by self-diagnosis?

YES >> Check the malfunctioning system. Refer to CVT-47, "CONSULT-III Function (TRANSMISSION)" .
NO >> GO TO 2.

2. CHECK OVERDRIVE CONTROL SWITCH

Check overdrive control switch. Refer to CVT-143 .

OK or NG

OK >> GO TO 3.
NG >> Repair or replace damaged parts.

3. CHECK CVT FLUID LEVEL

Check CVT fluid level. Refer to MA-19, "Checking CVT Fluid" .

OK or NG

OK >> GO TO 4.
NG >> Refill CVT fluid.

4. CHECK LINE PRESSURE

Check line pressure at idle. Refer to CVT-36, "Inspections before Trouble Diagnosis" .

OK or NG

OK >> GO TO 5.
NG >> Check the malfunctioning item. Refer to CVT-36, "Inspections before Trouble Diagnosis" .

5. CHECK STALL REVOLUTION

Check stall revolution. Refer to CVT-36, "Inspections before Trouble Diagnosis" .

OK or NG

OK >> GO TO 6.
NG >> Check the malfunctioning item. Refer to CVT-36, "Inspections before Trouble Diagnosis" .

6. CHECK SYMPTOM

Check again. Refer to CVT-43, "Cruise Test" .

OK or NG

OK >> **INSPECTION END**
NG >> GO TO 7.

7. CHECK TCM

1. Check TCM input/output signals. Refer to CVT-45, "TCM Terminal and Reference Value" .
2. If NG, re-check TCM pin terminals for damage or loose connection with harness connector.

OK or NG

OK >> Replace the transaxle assembly. Refer to CVT-178, "Removal and Installation" .
NG >> Repair or replace damaged parts.

Vehicle Speed Does Not Change in "D" Position

INFOID:0000000001703672

SYMPTOM:

Vehicle speed does not change in “D” position while the cruise test.

DIAGNOSTIC PROCEDURE

1. CHECK SELF-DIAGNOSTIC RESULTS

Perform self-diagnosis check. Refer to CVT-47, "CONSULT-III Function (TRANSMISSION)" .

Is any malfunction detected by self-diagnosis?

YES >> Check the malfunctioning system. Refer to CVT-47, "CONSULT-III Function (TRANSMISSION)" .
NO >> GO TO 2.

2. CHECK CVT POSITION

Check CVT position. Refer to CVT-171, "Checking of CVT Position"

OK or NG

OK >> GO TO 3.
NG >> Adjust CVT position. Refer to CVT-171, "Adjustment of CVT Position" .

3. CHECK CVT FLUID LEVEL

Check CVT fluid level. Refer to MA-19, "Checking CVT Fluid" .

OK or NG

OK >> GO TO 4.
NG >> Refill CVT fluid.

4. CHECK LINE PRESSURE

Check line pressure at idle. Refer to CVT-36, "Inspections before Trouble Diagnosis" .

OK or NG

OK >> GO TO 5.
NG >> Check the malfunctioning item. Refer to CVT-36, "Inspections before Trouble Diagnosis" .

5. CHECK STALL REVOLUTION

Check stall revolution. Refer to CVT-36, "Inspections before Trouble Diagnosis" .

OK or NG

OK >> GO TO 6.
NG >> Check the malfunctioning item. Refer to CVT-36, "Inspections before Trouble Diagnosis" .

6. CHECK SYMPTOM

Check again. Refer to CVT-43, "Cruise Test" .

OK or NG

OK >> **INSPECTION END**
NG >> GO TO 7.

7. CHECK TCM

1. Check TCM input/output signals. Refer to CVT-45, "TCM Terminal and Reference Value" .
2. If NG, re-check TCM pin terminals for damage or loose connection with harness connector.

OK or NG

OK >> Replace the transaxle assembly. Refer to CVT-178, "Removal and Installation" .
NG >> Repair or replace damaged parts.

Vehicle Does Not Decelerate by Engine Brake

INFOID:0000000001703673

SYMPTOM:

Engine brake does not operate when releasing the accelerator pedal while the cruise test.

DIAGNOSTIC PROCEDURE

1. CHECK SELF-DIAGNOSTIC RESULTS

Perform self-diagnosis check. Refer to CVT-47, "CONSULT-III Function (TRANSMISSION)" .

Is any malfunction detected by self-diagnosis?

YES >> Check the malfunctioning system. Refer to CVT-47, "CONSULT-III Function (TRANSMISSION)" .
NO >> GO TO 2.

2. CHECK CVT POSITION

Check CVT position. Refer to CVT-171, "Checking of CVT Position"

OK or NG

OK >> GO TO 3.
NG >> Adjust CVT position. Refer to CVT-171, "Adjustment of CVT Position" .

3. CHECK CVT FLUID LEVEL

Check CVT fluid level. Refer to MA-19, "Checking CVT Fluid" .

OK or NG

OK >> GO TO 4.
NG >> Refill CVT fluid.

4. CHECK LINE PRESSURE

Check line pressure at idle. Refer to CVT-36, "Inspections before Trouble Diagnosis" .

OK or NG

OK >> GO TO 5.
NG >> Check the malfunctioning item. Refer to CVT-36, "Inspections before Trouble Diagnosis" .

5. CHECK SYMPTOM

Check again. Refer to CVT-43, "Cruise Test" .

OK or NG

OK >> **INSPECTION END**
NG >> GO TO 6.

6. CHECK TCM

1. Check TCM input/output signals. Refer to CVT-45, "TCM Terminal and Reference Value" .
2. If NG, re-check TCM pin terminals for damage or loose connection with harness connector.

OK or NG

OK >> Replace the transaxle assembly. Refer to CVT-178, "Removal and Installation" .
NG >> Repair or replace damaged parts.

TRANSMISSION CONTROL MODULE

Removal and Installation

INFOID:0000000001703674

COMPONENTS

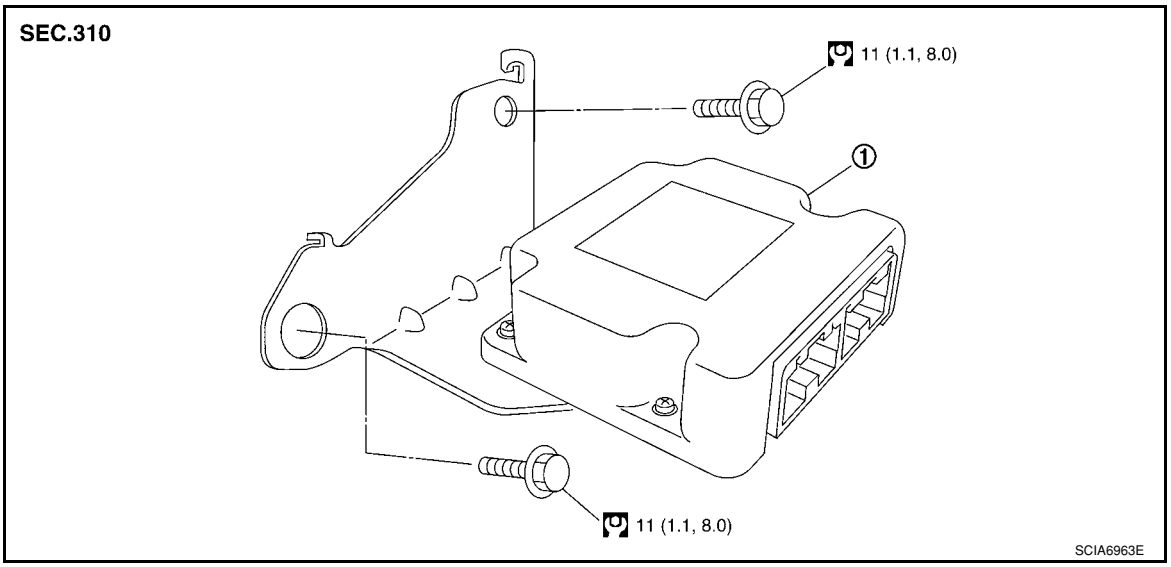

1. TCM

REMOVAL

1. Disconnect the battery negative terminal.
2. Disconnect the TCM harness connector (1) from the TCM (2).
   - Instrument lower finisher (3)
3. Remove the TCM (2).

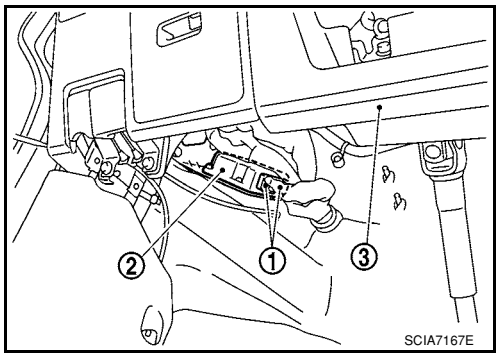

INSTALLATION

Installation is in the reverse order of removal.

CVT SHIFT LOCK SYSTEM

Description

INFOID:0000000001703675

- The mechanical key interlock mechanism also operates as a shift lock:
  With the ignition switch turned to ON, selector lever cannot be shifted from “P” position to any other position unless brake pedal is depressed.
  With the key removed, selector lever cannot be shifted from “P” position to any other position.
  The key cannot be removed unless selector lever is placed in “P” position.
- The shift lock and key interlock mechanisms are controlled by the ON-OFF operation of the shift lock solenoid and by the operation of the rotator and slider located inside key cylinder, respectively.

Shift Lock System Electrical Parts Location

INFOID:0000000001703676

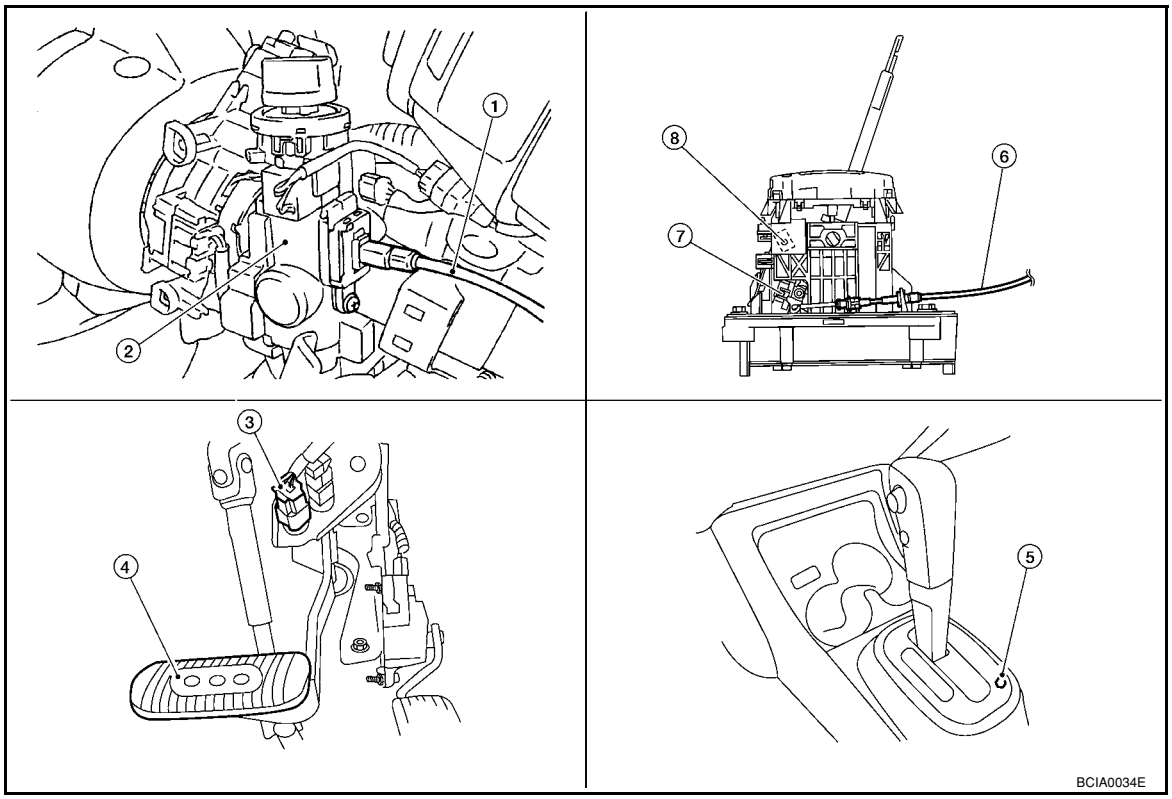

1. Key interlock cable
2. Key cylinder
3. Stop lamp switch
4. Brake pedal
5. Shift lock release button
6. Key interlock cable
7. Shift lock solenoid
8. Park position switch

Wiring Diagram - CVT - SHIFT

INFOID:0000000001703677

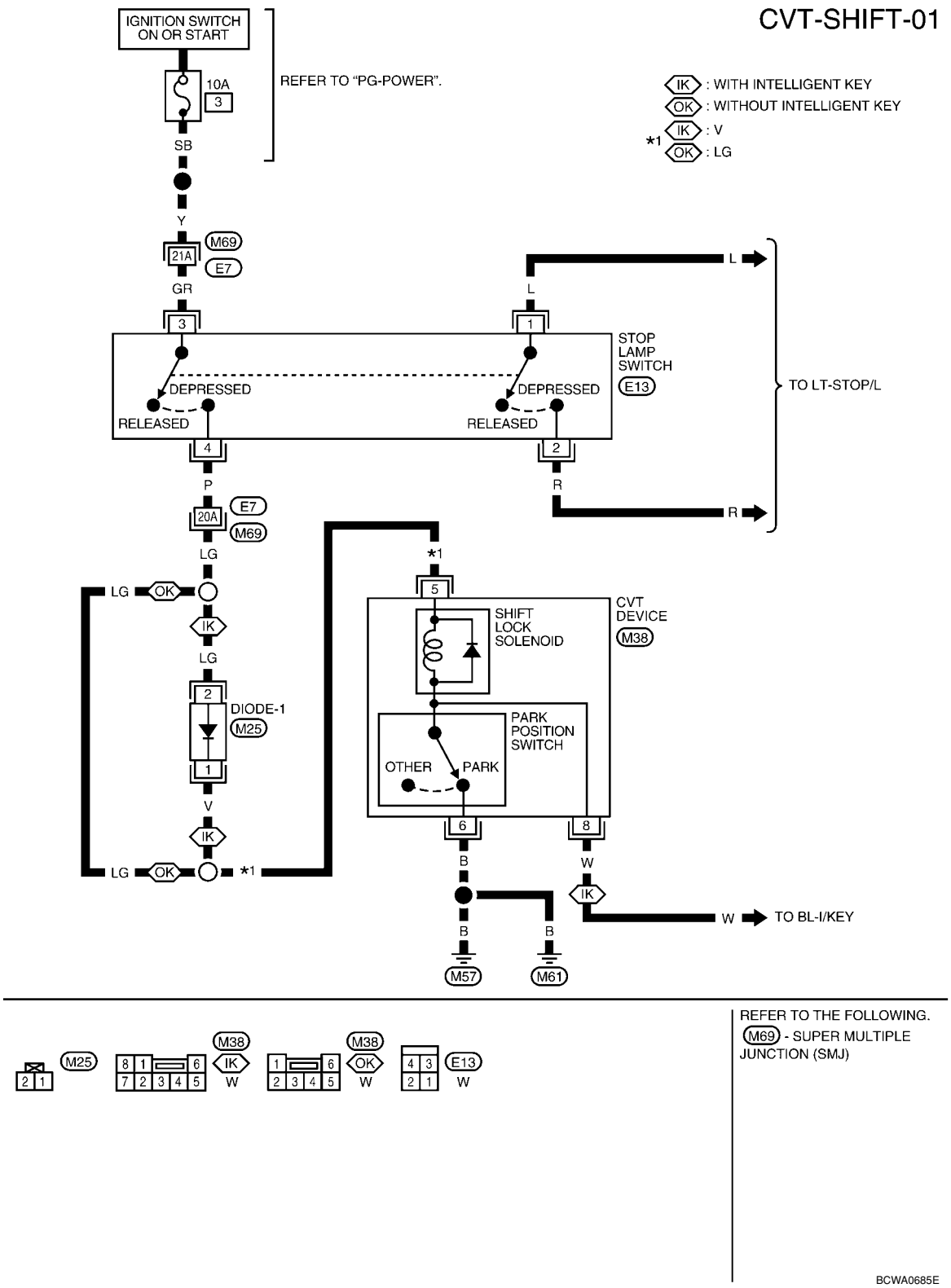

Diagnosis Procedure

INFOID:0000000001703678

SYMPTOM 1:

- **Selector lever cannot be moved from "P" position with ignition switch in ON position and brake pedal depressed.**

- **Selector lever can be moved from “P” position with ignition key in ON position and brake pedal released.**
- **Selector lever can be moved from “P” position when ignition switch is removed from key cylinder.**

SYMPTOM 2:

- **Ignition key cannot be removed when selector lever is set to “P” position.**
- **Ignition key can be removed when selector lever is set to any position except “P” position.**

1. CHECK KEY INTERLOCK CABLE

Check key interlock cable for damage.

OK or NG

OK >> GO TO 2.
NG >> Repair key interlock cable. Refer to AT-213, "Removal and Installation".

2. CHECK CVT POSITION

Check CVT position. Refer to CVT-171, "Checking of CVT Position".

OK or NG

OK >> GO TO 3.
NG >> Adjust control cable. Refer to CVT-171, "Adjustment of CVT Position".

3. CHECK SHIFT LOCK SOLENOID AND PARK POSITION SWITCH

1. Turn ignition switch ON. (Do not start engine.)
2. Selector lever is set in “P” position.
3. Check operation sound.

Condition	Brake pedal	Operation sound
When ignition switch is turned to ON position and selector lever is set in “P” position.	Depressed	Yes
	Released	No

OK or NG

OK >> **INSPECTION END**
NG - 1 >> With intelligent key: GO TO 4.
NG - 2 >> Without intelligent key: GO TO 5.

4. CHECK POWER SOURCE

1. Turn ignition switch ON. (Do not start engine.)
2. Check voltage between CVT device harness connector terminal 5 and ground.

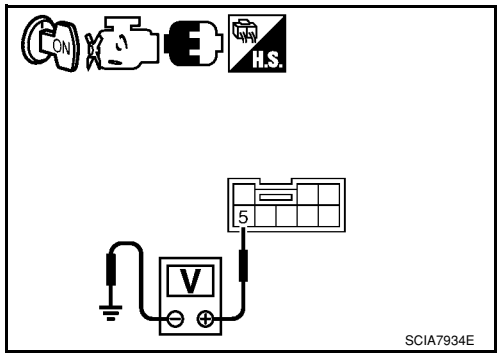

Voltage:

Brake pedal depressed: Battery voltage
Brake pedal released: 0V

OK or NG

OK >> GO TO 8.
NG >> GO TO 6.

5. CHECK POWER SOURCE

1. Turn ignition switch ON. (Do not start engine.)

2. Check voltage between CVT device harness connector terminal 5 and ground.

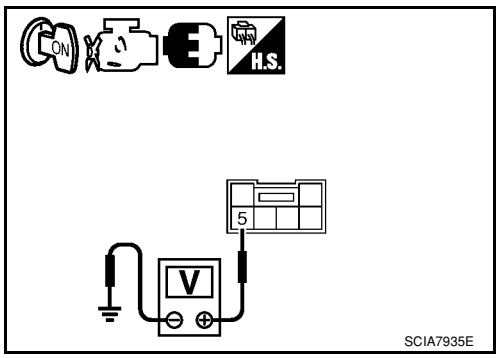

Voltage:

Brake pedal depressed: Battery voltage

Brake pedal released: 0V

OK or NG

OK >> GO TO 9.
NG >> GO TO 6.

6. CHECK STOP LAMP SWITCH

1. Turn ignition switch OFF.
2. Disconnect stop lamp switch harness connector.
3. Check continuity between stop lamp switch harness connector terminals 3 and 4.

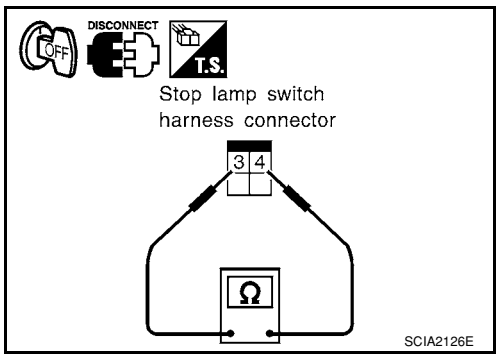

Condition	Continuity
When brake pedal is depressed	Yes
When brake pedal is released	No

Check stop lamp switch after adjusting brake pedal. Refer to BR-5.

OK or NG

OK >> GO TO 7.
NG >> Repair or replace damaged parts.

7. DETECT MALFUNCTIONING ITEM

Check the following. If any items are damaged, repair or replace damaged parts.
- Harness for short or open between ignition switch and stop lamp switch harness connector
- Harness for short or open between stop lamp switch harness connector and CVT device harness connector
- 10A fuse [No.3, located in the fuse block (J/B)]
- Ignition switch, Refer to PG-3.

OK or NG

OK >> **INSPECTION END**
NG >> Repair or replace damaged parts.

8. CHECK GROUND CIRCUIT

1. Turn ignition switch OFF.
2. Disconnect CVT device harness connector.
3. Check continuity between CVT device harness connector terminal 6 and ground.

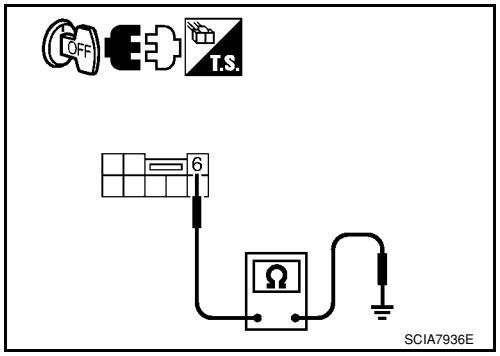

Continuity should exist.

4. Connect CVT device harness connector.

OK or NG

OK >> Replace shift lock solenoid and park position switch assembly.
NG >> Repair open circuit or short to ground or short to power in harness or connectors.

9. CHECK GROUND CIRCUIT

1. Turn ignition switch OFF.
2. Disconnect CVT device harness connector.

3. Check continuity between CVT device harness connector terminal 6 and ground.

Continuity should exist.

4. Connect CVT device harness connector.

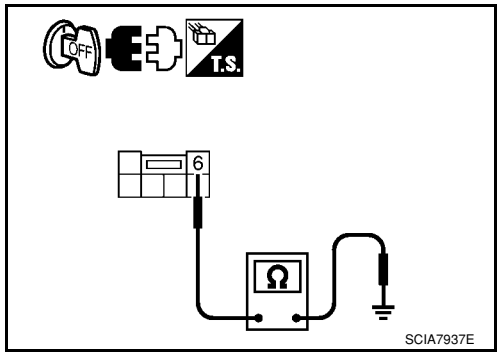

OK or NG

OK >> Replace shift lock solenoid and park position switch assembly.

NG >> Repair open circuit or short to ground or short to power in harness or connectors.

SHIFT CONTROL SYSTEM

Removal and Installation

INFOID:0000000001703679

CONTROL DEVICE COMPONENTS

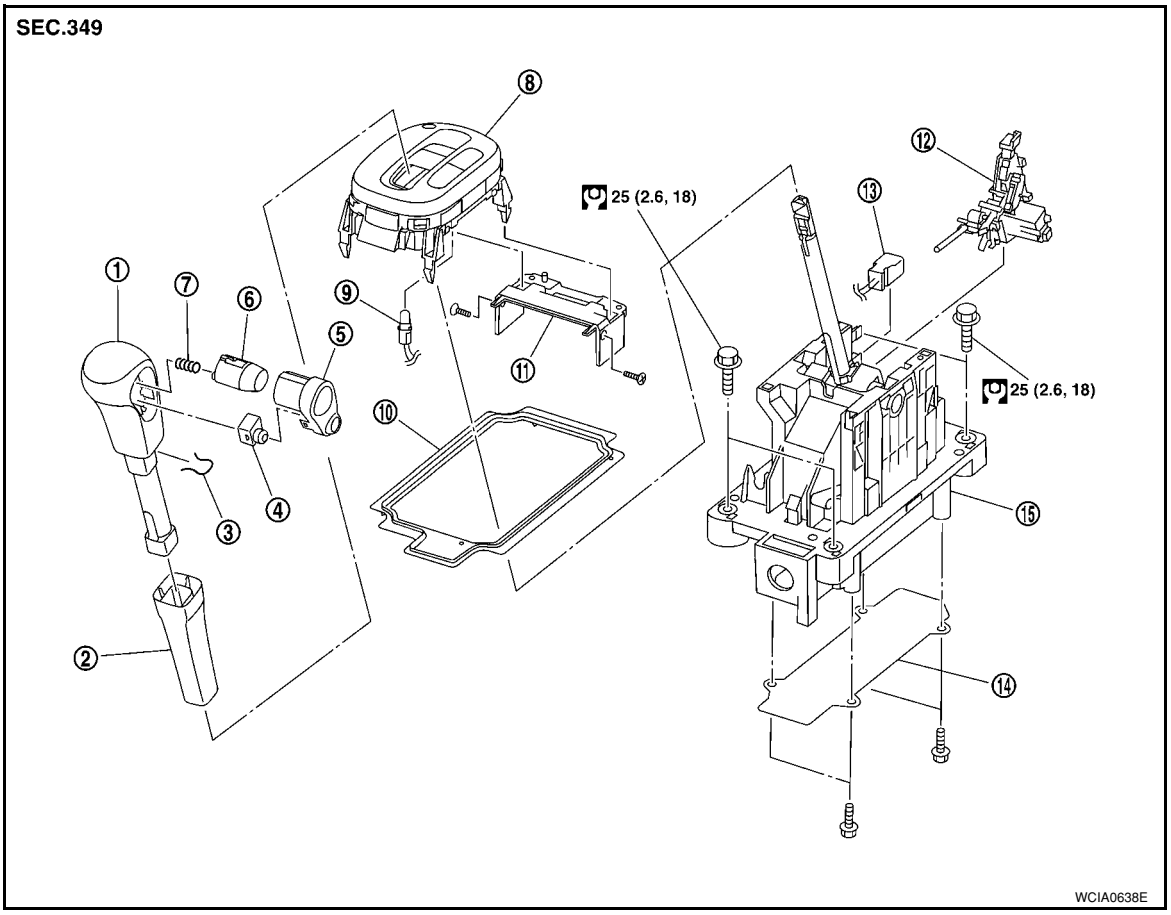

1. Selector lever knob	2. Knob cover	3. Lock pin
4. Overdrive control switch	5. Knob finisher	6. Selector button
7. Selector button return spring	8. Position indicator plate	9. Position lamp
10. Dust cover	11. Bracket	12. Shift lock solenoid and park position switch assembly
13. CVT device harness connector	14. Plate	15. Control device assembly

CONTROL CABLE COMPONENTS

Refer to the figure below for control cable removal and installation procedure.

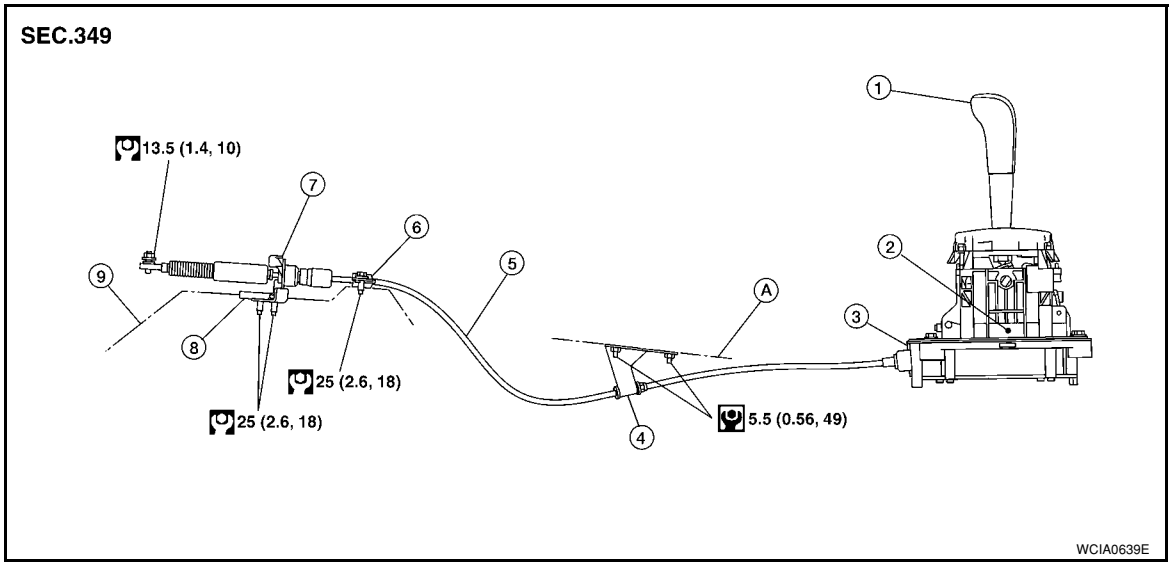

1. Selector lever knob
2. Control device assembly
3. Lock plate
4. Bracket
5. Control cable
6. Bracket
7. Lock plate
8. Bracket
9. Transaxle assembly

A. Floor

REMOVAL

CAUTION:

Make sure that parking brake is applied before removal and installation.

1. Place the selector lever in the “N” position.
2. Remove the center console assembly. Refer to IP-10.
3. Disconnect the CVT device harness connector (1).
4. Remove the key interlock cable from the control device assembly. Refer to CVT-173, "Removal and Installation".

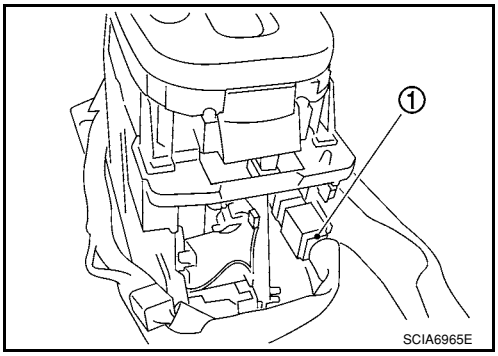

5. Remove the bolts (A) from the control device assembly (1).
6. Remove exhaust front tube, center muffler and heat plates. Refer to EM-21.

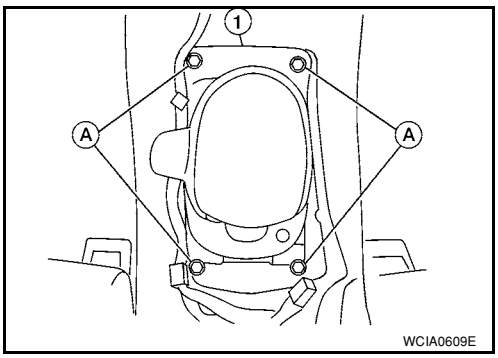

7. Remove the plate (1) from the control device assembly.
   ⇦: Vehicle front

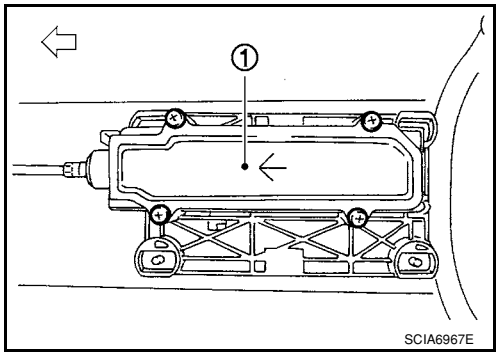

8. Remove the lock plate (1) from the control cable (2).
   ⇦: Vehicle front
9. Remove the control cable (2) from the control device assembly.

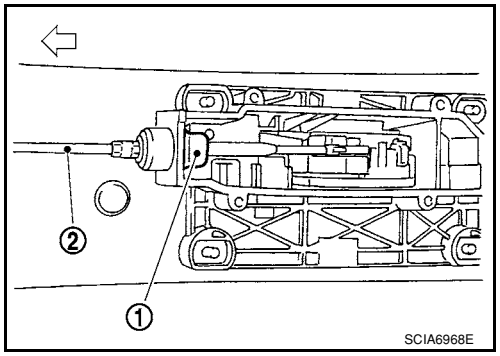

10. Insert flat-bladed screwdrivers at points (A) and (B) as shown, and press both tabs (E) and (F) at the front (C) and rear (D) slightly toward the center of the control device assembly to remove the control device assembly from the underside of the vehicle.
    ⇦: Vehicle front

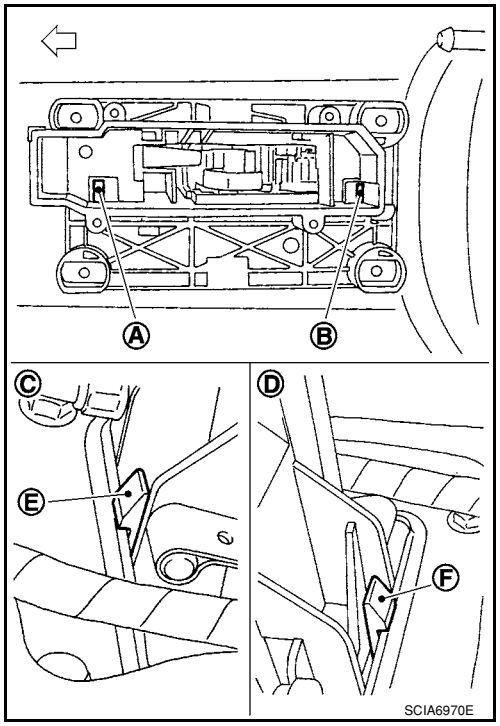

INSTALLATION

Installation is in the reverse order of removal.

- When installing the control cable (1) to the control device assembly (2), make sure that the control cable (1) is fully pressed in with the ribbed surface (A) facing downward from the vehicle.
  ⇦: Vehicle front
- After installation is completed, adjust and check the CVT position. Refer to CVT-171, "Adjustment of CVT Position" and CVT-171, "Checking of CVT Position".

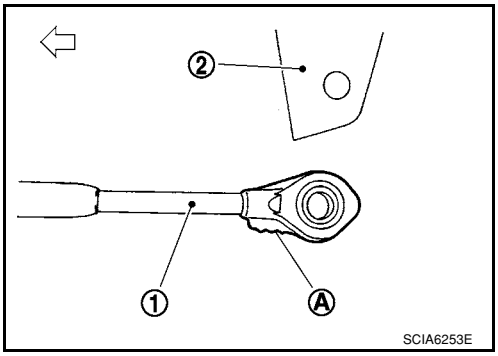

Control Device Disassembly and Assembly

INFOID:0000000001703680

DISASSEMBLY

NOTE:

Refer to CVT-167, "Removal and Installation" to disassemble.

1. Remove selector lever knob from control device assembly. Refer to CVT-170, "Selector Lever Knob Removal and Installation".
2. Remove position lamp from position indicator plate (1).
3. Insert a flat-bladed screwdriver to (A) (at 4 locations) as shown, and bend each hook slightly to raise position indicator plate (1) and remove from control device assembly (2).
4. Remove bracket from control device assembly (2).
5. Remove CVT device harness connector from control device assembly (2).

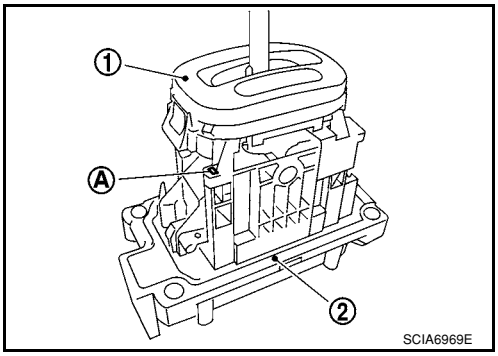

6. Release tabs (A) on shift lock solenoid and park position switch assembly from hooks (B) on control device assembly to shift lock solenoid and park position switch assembly.

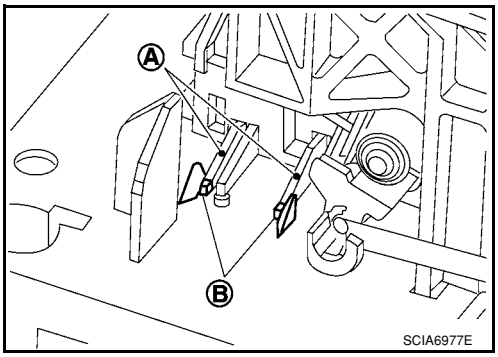

ASSEMBLY

Assembly is in the reverse order of disassembly.

Selector Lever Knob Removal and Installation

INFOID:0000000001703681

REMOVAL

CAUTION:

Make sure that parking brake is applied before removal/installation.

1. Set selector lever knob (1) in “N” position.
2. Slide knob cover (2) downward.
3. Pull out lock pin (3) from selector lever knob (1).
4. Remove selector lever knob (1) and knob cover (2) as a set from selector lever.
   CAUTION:
   Do not push selector button.

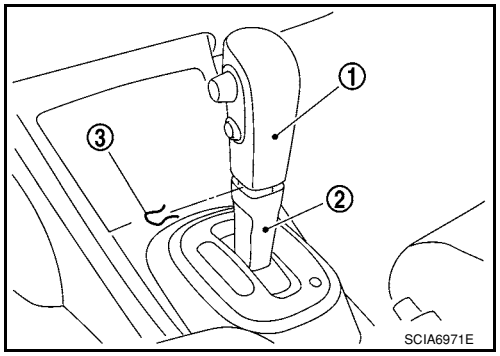

INSTALLATION

1. Insert lock pin (1) to selector lever knob (2).
2. Install knob cover (3) to selector lever knob (2).
3. Set selector lever in “N” position.
4. Install selector lever knob over selector lever until a click is felt.
   CAUTION:
   - **Do not tilt selector lever knob when installing. Install it straight, and do not tap or apply any shock to install it.**
   - **Do not push selector button.**

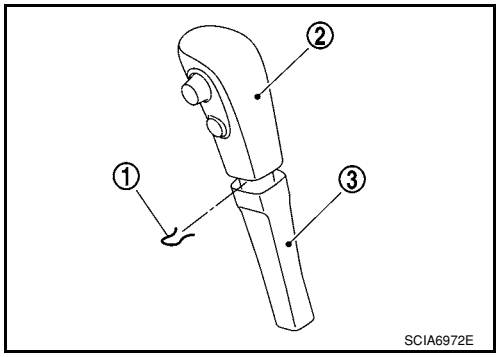

Adjustment of CVT Position

INFOID:0000000001703682

CAUTION:
Make sure that parking brake is applied before adjustment.

1. Loosen the control cable nut (A) and place the manual lever (1) in “P” position.
2. Place selector lever in “P” position.
3. Push the control cable (2) in with a load of 9.8 N (approximately 1 kg, 2.2 lb). Release the control cable and temporarily tighten the control cable nut.
   NOTE:
   Do not move the manual lever. Make sure the manual lever stays in the “P” position.
4. Tighten the control cable nut.
   CAUTION:
   Secure the manual lever when tightening nut.

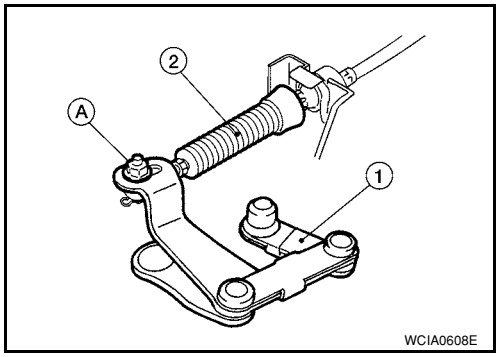

Control cable nut: **Refer to CVT-167, "Removal and Installation".**

5. Check the operation of the CVT. Refer to CVT-171, "Checking of CVT Position".

Checking of CVT Position

INFOID:0000000001703683

1. Place selector lever in “P” position, and turn ignition switch ON. (Do not start engine.)
2. Make sure selector lever can be shifted to other than “P” position when brake pedal is depressed. Also make sure selector lever can be shifted from “P” position only when brake pedal is depressed.
3. Move the selector lever and check for excessive effort, sticking, noise or rattle.
4. Confirm the selector lever stops at each position with the feel of engagement when it is moved through all the positions. Check that the actual position of the selector lever matches the position shown by the shift position indicator and the manual lever on the transaxle.

5. The method of operating the selector lever to individual positions correctly should be as shown.
   - (A): Press selector button to operate selector lever, while depressing the brake pedal.
   - (B): Press selector button to operate selector lever.
   - (C): Selector lever can be operated without pressing selector button.
6. Confirm the back-up lamps illuminate only when selector lever is placed in the “R” position. Confirm the back-up lamps do not illuminate when the selector lever is pushed toward the “R” position side with the gear position remained in the “P” or “N” position.
7. Confirm the engine can only be started with the selector lever in the “P” and “N” positions.
8. Make sure transaxle is locked completely in “P” position.

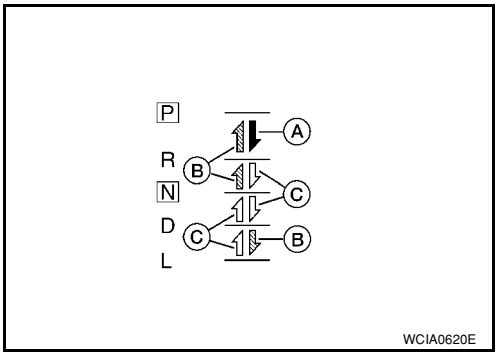

KEY INTERLOCK CABLE

Removal and Installation

INFOID:0000000001703684

COMPONENTS

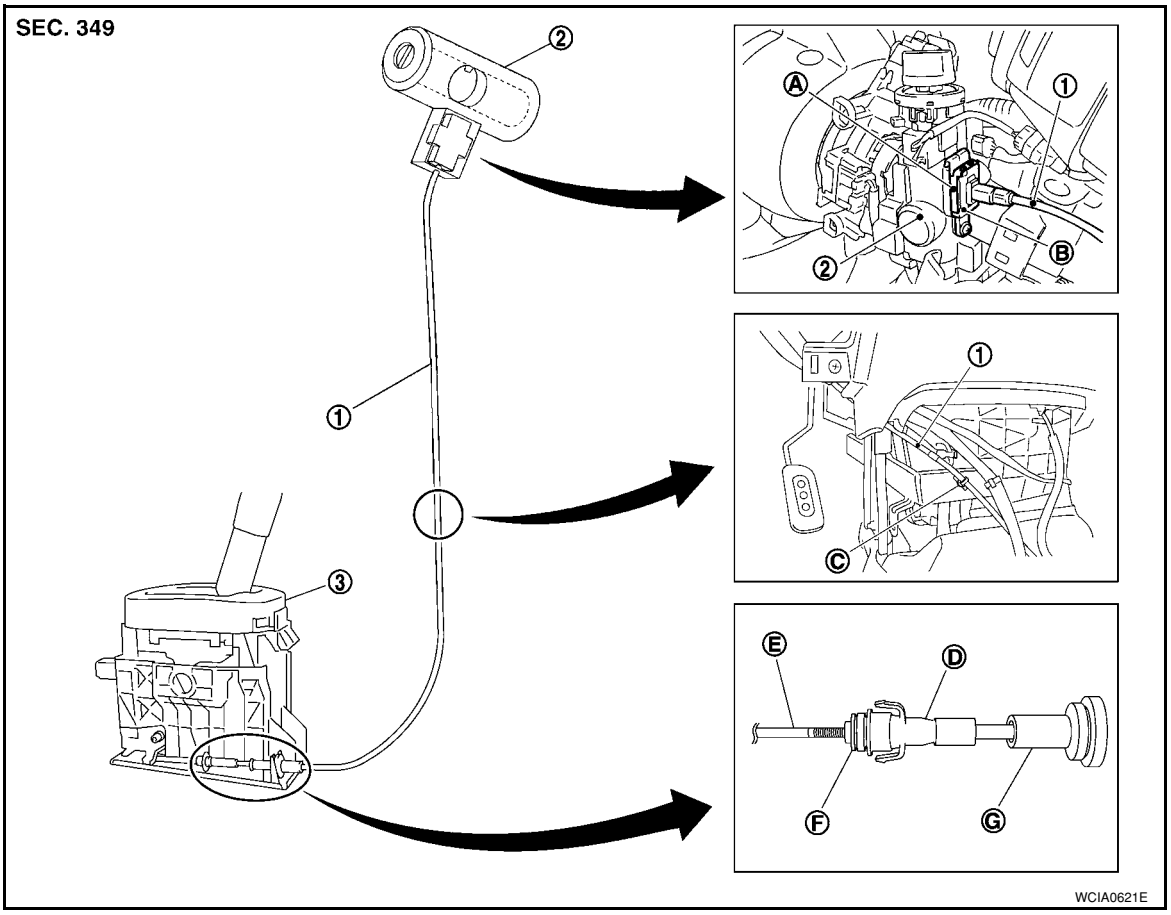

1. Key interlock cable	2. Key cylinder	3. Control device assembly
A. Lock plate	B. Holder	C. Clip
D. Slider	E. Key interlock rod	F. Adjust holder
G. Casing cap		

REMOVAL

Refer to the figure for key interlock cable removal procedure.

CAUTION:

Make sure that parking brake is applied before removal/installation.

1. Place the selector lever in the “N” position.
2. Remove the selector lever knob. Refer to CVT-170, "Selector Lever Knob Removal and Installation".
3. Remove the center console assembly. Refer to IP-10.

4. Slide the slider (A) toward the casing cap (B) while pressing tabs (C) on the slider to separate the slider (A) from the adjust holder (D).
5. Remove the casing cap (B) from the cable bracket on the control device assembly.
6. Remove the key interlock cable from the key interlock rod (E).

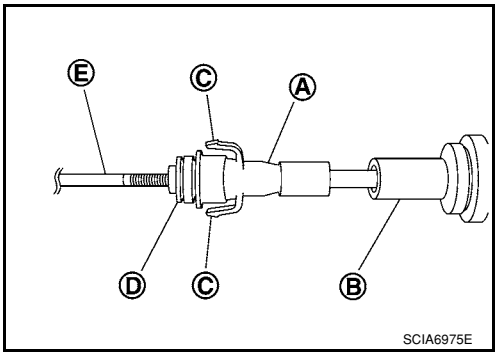

7. Remove steering column cover (upper and lower) and instrument lower finisher. Refer to IP-10.
8. Pull out the lock plate (A) from the holder (B).
9. Remove the key interlock cable (1) from the key cylinder (2).

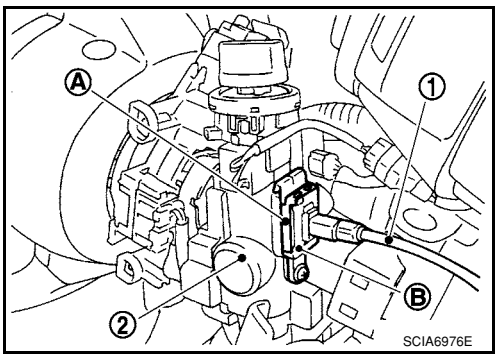

10. Remove the clip (A), and then remove the key interlock cable (1).

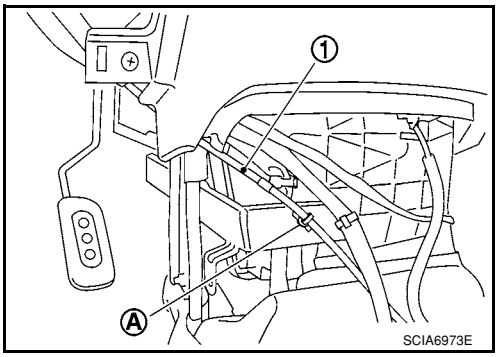

INSTALLATION

CAUTION:

- **Install key interlock cable in such a way that it will not be damaged by sharp bends, twists or interference with adjacent parts.**
- **After installing key interlock cable to control device assembly, make sure that casing cap and bracket are firmly secured in their positions.**

1. Place the selector lever in the “P” position.
2. Turn ignition switch to “ACC” or “ON” position.
3. Set the key interlock cable (1) to the key cylinder (2).
4. Install the lock plate (A) to the holder (B).
5. Turn ignition switch to “LOCK” position.

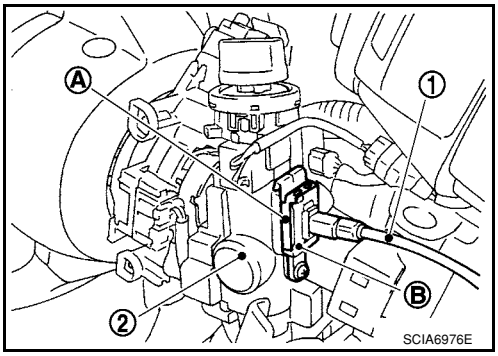

6. Temporarily install the adjust holder (A) to the key interlock rod (B).
7. Install the casing cap (C) to the cable bracket (D) on the control device assembly.
   CAUTION:
   - **Do not bend or twist key interlock cable excessively when installing.**
   - **After installing key interlock cable to cable bracket (D) on control device assembly, make sure casing caps (C) is firmly secured in cable bracket (D) on control device assembly.**
   - **If casing cap (C) is loose [less than 39.2 N (4.0 kg, 8.8 lb) removing force], replace key interlock cable.**

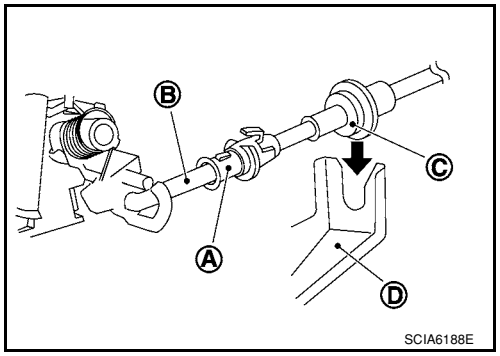

8. Slide the slider (A) toward the key interlock rod (D) while pressing the pull lock (B) down to securely connect the adjust holder (C) with the key interlock rod (D).
   CAUTION:
   - **Do not press tabs when holding slider (A).**
   - **Do not apply any side to side force to key interlock rod (D) when sliding slider (A).**

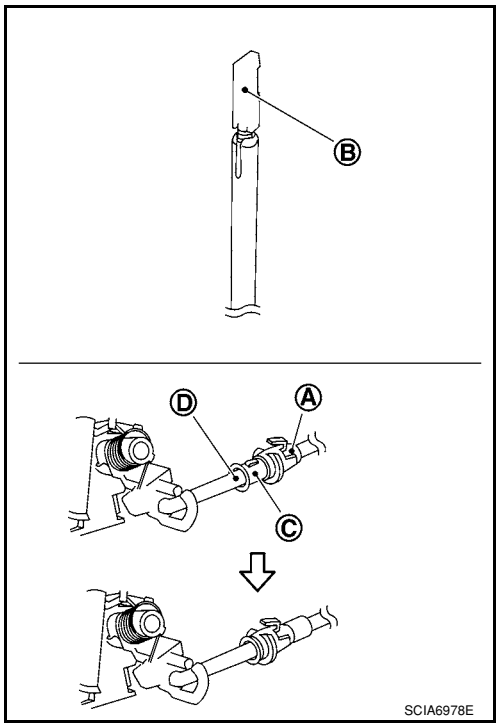

9. Secure the key interlock cable (1) with the clip (A).
10. Install steering column cover (upper and lower) and instrument lower finisher. Refer to IP-10.
11. Install the center console assembly. Refer to IP-10.
12. Install the selector lever knob. Refer to CVT-170, "Selector Lever Knob Removal and Installation".
13. Check shift lock system. Refer to CVT-162, "Description".

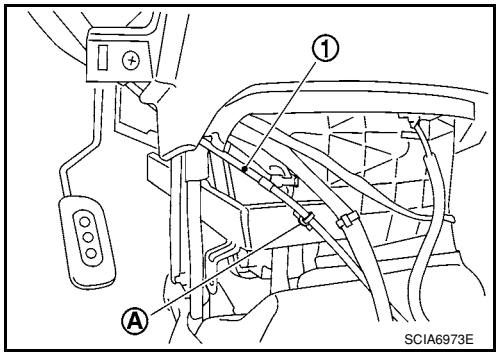

AIR BREATHER HOSE

Removal and Installation

INFOID:0000000001703685

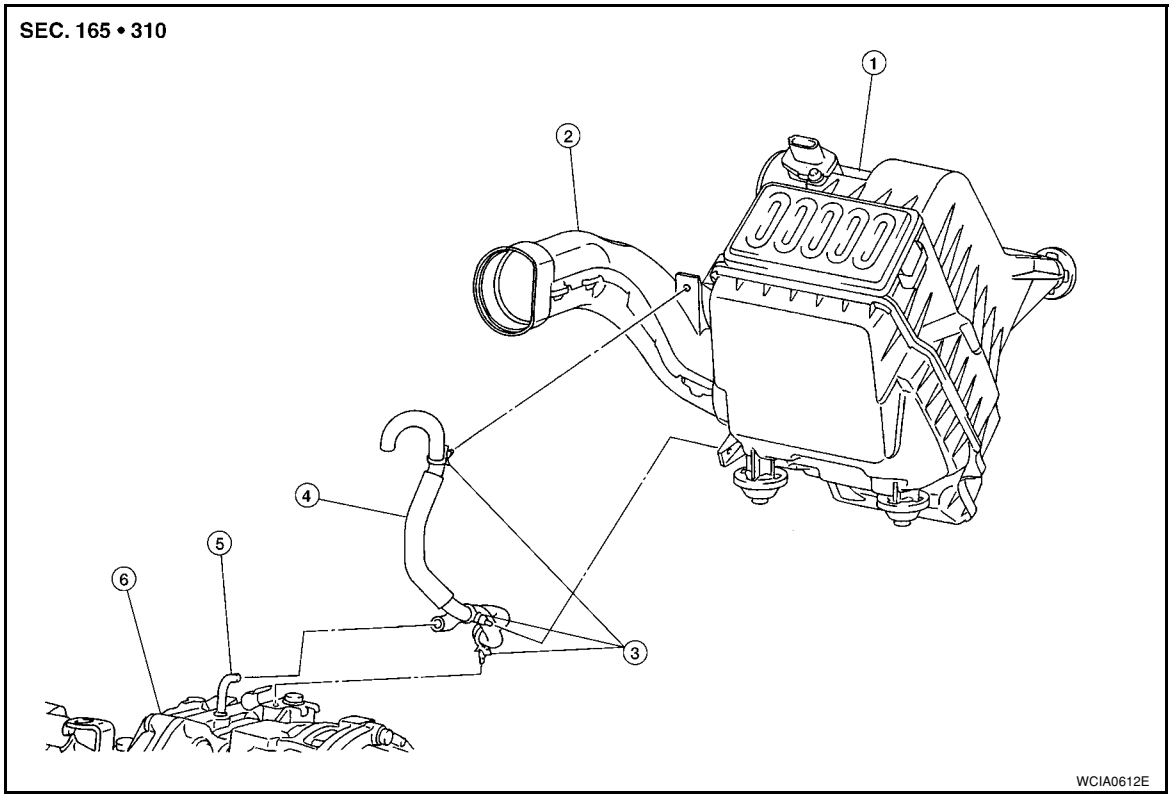

1.	Air cleaner case	2.	Air duct	3.	Clip
4.	Air breather hose	5.	Air breather tube	6.	CVT

REMOVAL

1. Remove air duct (inlet), air duct and air cleaner case. Refer to EM-16.
2. Remove air breather hose.

INSTALLATION

Installation is in the reverse order of removal.

CAUTION:

Make sure air breather hose is not collapsed or blocked due to folding or bending when installed.

NOTE:

- Install the air breather hose (1) to the air breather tube (2) so that the paint mark (A) faces upward. Also make sure the air breather hose end is pushed up to the tube bend portion.
- When installing air breather hose (1) to air duct and air cleaner case, make sure to fully insert the hose clips.

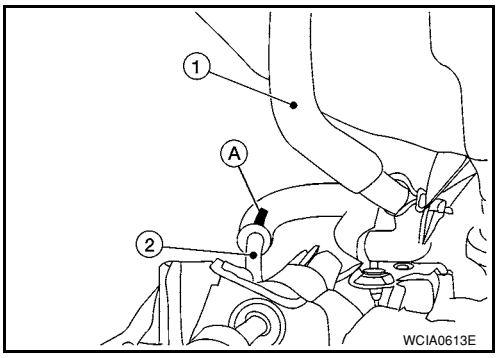

DIFFERENTIAL SIDE OIL SEAL

Removal and Installation

INFOID:0000000001703686

COMPONENTS

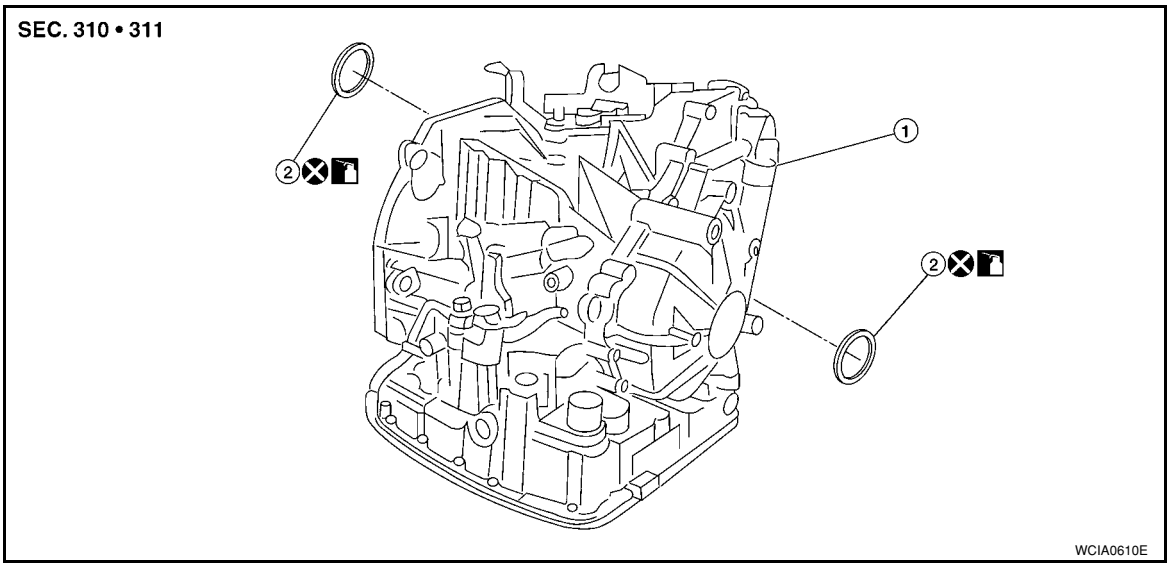

1. CVT
2. Differential side oil seal

: Apply CVT Fluid NS-2.

REMOVAL

1. Remove drive shaft assembly. Refer to FAX-8.
2. Remove differential side oil seal using a suitable tool.
   CAUTION:
   Do not scratch transaxle case or converter housing.

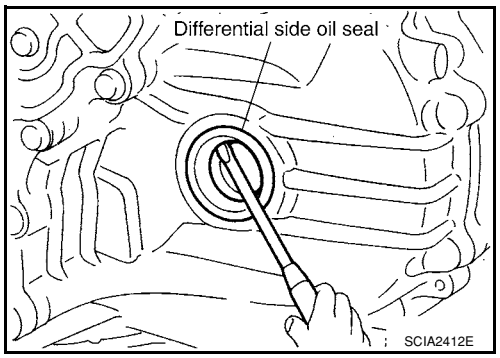

INSTALLATION

1. Drive the new differential side oil seal into the transaxle case side (B) and converter housing side (C) until it is flush using tool.

Unit: mm (in)

Tool number (Kent-Moore No.)	— (J-47244)
	ST33400001 (J-47005)
Dimensions A	0±0.5 (0±0.020)

CAUTION:
- **Do not reuse differential side oil seals.**
- **Apply specified NISSAN CVT fluid to side oil seals.**

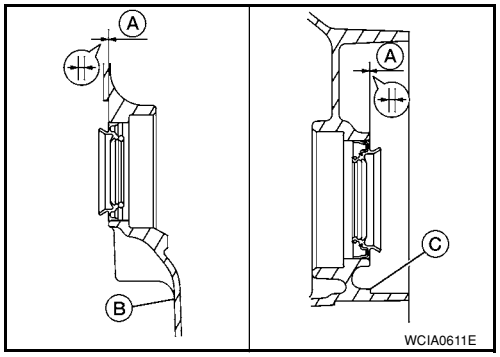

2. Install drive shaft assembly. Refer to FAX-8.
3. Check CVT fluid level and leakage. Refer to MA-19, "Checking CVT Fluid".

TRANSAXLE ASSEMBLY

Removal and Installation

INFOID:0000000001703687

COMPONENTS

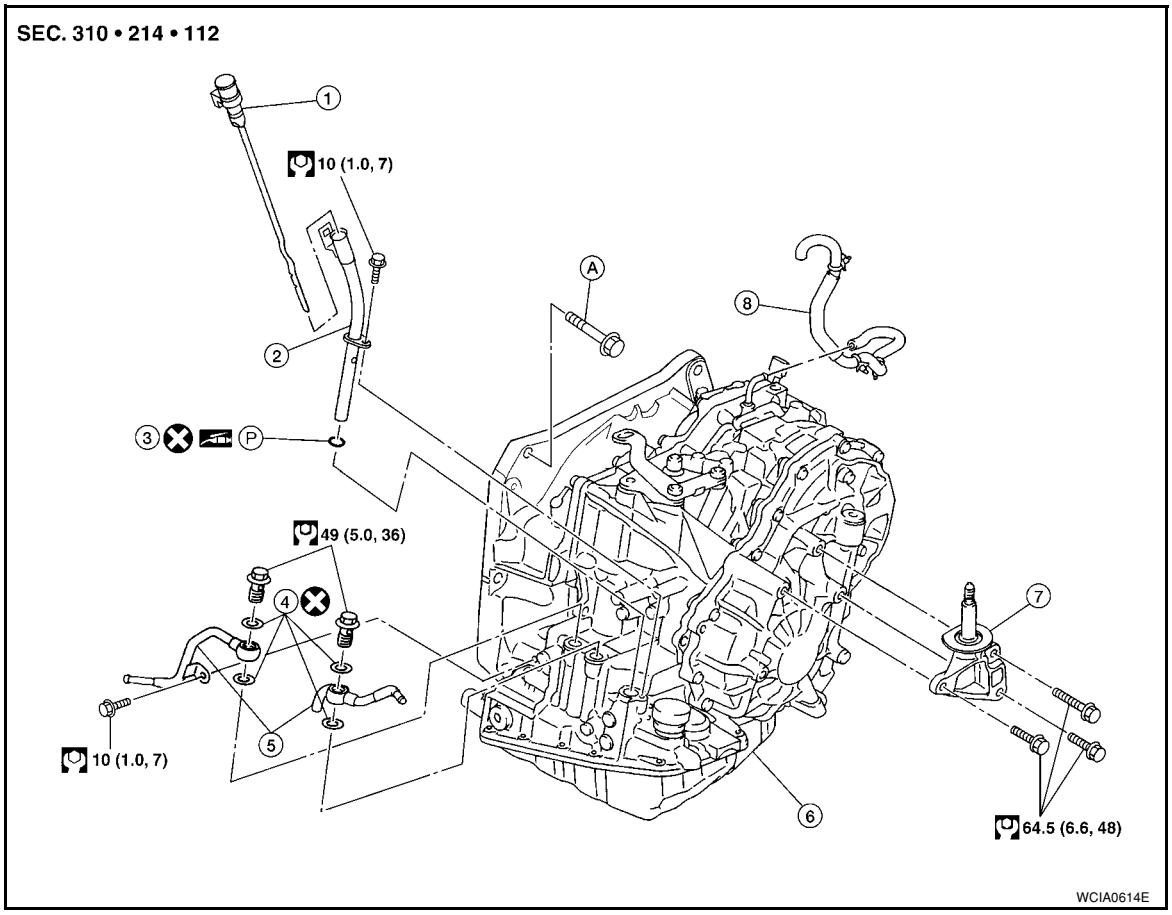

1.	CVT fluid level gauge	2.	CVT fluid charging pipe	3.	O-ring
4.	Copper washer	5.	Fluid cooler tube	6.	Transaxle assembly
7.	Engine mounting bracket (LH)	8.	Air breather hose	A.	Refer to "INSTALLATION".

REMOVAL

1. Remove the engine and transaxle as an assembly. Refer to EM-72, "Removal and Installation".
2. Disconnect the secondary speed sensor connector (A) and CVT unit connector (B). Refer to CVT-9, "Removal and Installation Procedure for CVT Unit Connector".
3. Remove the harness from the transaxle.

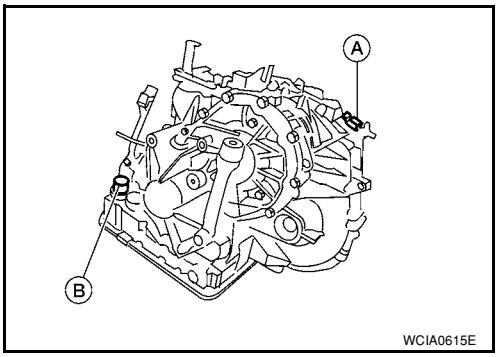

4. Remove the four drive plate to torque converter nuts.
   NOTE:
   Rotate the crankshaft clockwise as viewed from front of engine for access to drive plate to torque converter nuts.

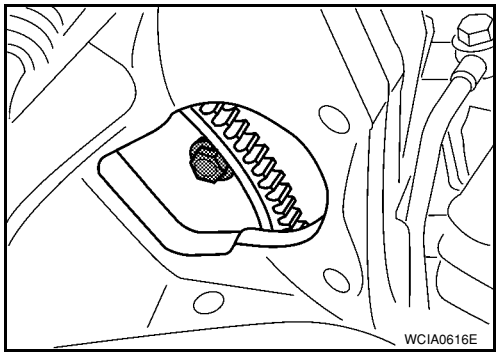

5. Put matching marks on the drive plate and torque converter alignment stud.
   CAUTION:
   For matching marks, use paint. Never damage the drive plate or torque converter.
6. Remove the transaxle to engine and engine to transaxle bolts.
7. Separate the transaxle from the engine.
8. If necessary, remove the following from the transaxle:
   - CVT fluid charging pipe
   - Engine mounting bracket (LH)
   - Fluid cooler tubes
   - Air breather hose
   - Any necessary brackets

INSTALLATION

Installation is in the reverse order of removal.

CAUTION:

- **When replacing an engine or transmission you must make sure any dowels are installed correctly during re-assembly.**
- **Improper alignment caused by missing dowels may cause vibration, oil leaks or breakage of drive train components.**
- **Do not reuse O-rings and copper washers.**
- **When turning crankshaft, turn it clockwise as viewed from the front of the engine.**
- **When tightening the nuts for the torque converter while securing the crankshaft pulley bolt, be sure to confirm the tightening torque of the crankshaft pulley bolt. Refer to EM-37.**
- **After converter is installed to drive plate, rotate crankshaft several turns to check that transaxle rotates freely without binding.**
- When installing the torque converter to the transaxle measure distance A.

Distance A: 14.4 mm (0.57 in) or more

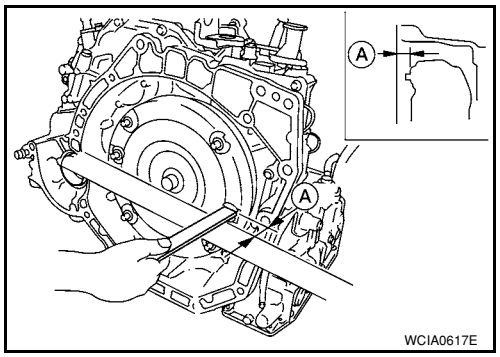

- When installing the cooler outlet tube (1) to the transaxle assembly (2), align the cooler tube bracket (A) against the transaxle as shown.

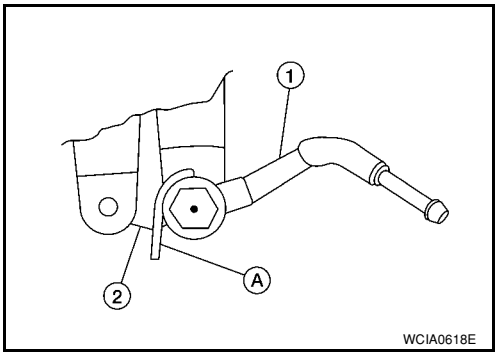

- When installing the transaxle to the engine, align the matching mark on the drive plate with the matching mark on the torque converter alignment stud.
- When securing the transaxle to the engine, attach the bolts in accordance with the following standard.

Bolt No.	1 (Transaxle to engine)	2 (Engine to transaxle)
Number of bolts	2	7
Bolt length “A” mm (in)	55 (2.17)	50 (1.97)
Tightening torque N·m (kg-m, ft-lb)	62 (6.3, 46)	

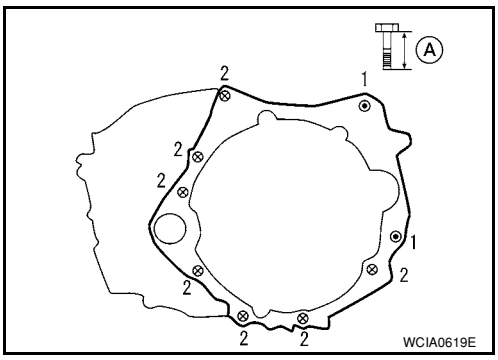

- When installing the drive plate to torque converter nuts, tighten them temporarily. Then tighten the nuts to the specified torque.

Converter nuts: : 51 N·m (5.2 kg-m, 38 ft-lb)

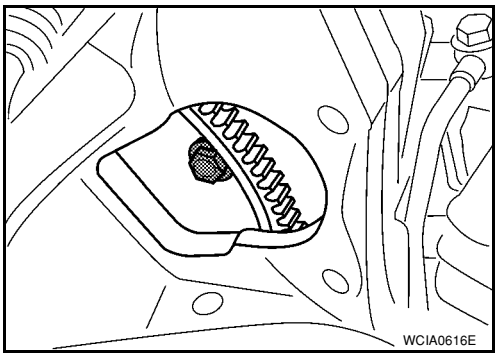

- After completing installation check for fluid level, fluid leakage, and the positions of CVT. Refer to MA-19, "Checking CVT Fluid", CVT-171, "Adjustment of CVT Position" and CVT-171, "Checking of CVT Position".
- When replacing the CVT assembly, erase EEP ROM in TCM. Refer to CVT-8, "Service After Replacing TCM and Transaxle Assembly".

SERVICE DATA AND SPECIFICATIONS (SDS)

General Specification

INFOID:0000000001703688

Applied model		MR18DE engine
CVT model		RE0F08A
CVT assembly	Model code number	1XB6B
Transmission gear ratio	“D” position	Variable
	Reverse	2.689
	Final drive	5.473
Recommended fluid		NISSAN CVT Fluid NS-2*1
Fluid capacity		8.3 liter (8-3/4 US qt, 7-1/4 Imp qt)

CAUTION:
- **Use only Genuine NISSAN CVT Fluid NS-2. Do not mix with other fluid.**
- **Using CVT fluid other than Genuine NISSAN CVT Fluid NS-2 will deteriorate in driveability and CVT durability, and may damage the CVT, which is not covered by the warranty.**

*1: Refer to MA-10, "Fluids and Lubricants" .

Vehicle Speed When Shifting Gears

INFOID:0000000001703689

Numerical value data are reference values.

Engine type	Throttle position	Shift pattern	Engine speed (rpm)	
			At 40 km/h (25 MPH)	At 60 km/h (37 MPH)
MR18DE	8/8	“D” position Overdrive-off mode “L” position	3,600 - 4,500	4,400 - 5,300
	2/8	“D” position	1,300 - 3,100	1,400 - 3,500
		Overdrive-off mode	2,200 - 3,000	2,800 - 3,600
		“L” position	3,200 - 4,100	3,900 - 4,800

CAUTION:

Lock-up clutch is engaged when vehicle speed is approximately 18 km/h (11 MPH) to 90 km/h (56 MPH).

Stall Speed

INFOID:0000000001703690

Stall speed	2,600 - 3,150 rpm

Line Pressure

INFOID:0000000001703691

Engine speed	Line pressure kPa (kg/cm^2 , psi)
	“R”, “D” and “L” positions
At idle	650 (6.63, 94.3)
At stall	4,250 (43.35, 616.3)

Solenoid Valves

INFOID:0000000001703692

Name	Resistance (Approx.)	Terminal
Pressure control solenoid valve B (secondary pressure solenoid valve)	3 - 9 Ω	3
Pressure control solenoid valve A (line pressure solenoid valve)		2
Torque converter clutch solenoid valve		12
Lock-up select solenoid valve	6 - 19Ω	13

CVT Fluid Temperature Sensor

INFOID:0000000001703693

Name	Condition	CONSULT-II “DATA MONITOR” (Approx.)	Resistance (Approx.)
ATF TEMP SEN	20°C (68°F)	2.0 V	6.5 kΩ
	80°C (176°F)	1.0 V	0.9 kΩ

Primary Speed Sensor

INFOID:0000000001703694

Name	Condition	Data (Approx.)
Primary speed sensor	When driving [“L” position, 20 km/h (12 MPH)].	1000 Hz

Secondary Speed Sensor

INFOID:0000000001703695

Name	Condition	Data (Approx.)
Secondary speed sensor	When driving [“D” position, 20 km/h (12 MPH)].	570 Hz

Removal and Installation

INFOID:0000000001703696

Distance between end of converter housing and torque converter	14.4 mm (0.57 in) or more

SECTION DI
DRIVER INFORMATION SYSTEM

CONTENTS

SERVICE INFORMATION 2

PRECAUTION 2
Precaution for Supplemental Restraint System (SRS) "AIR BAG" and "SEAT BELT PRE-TENSIONER" 2

PREPARATION 3
Commercial Service Tool 3

COMBINATION METERS 4
Component Parts and Harness Connector Location 4
System Description 4
Arrangement of Combination Meter 6
Internal Circuit 7
Wiring Diagram - METER - 8
Combination Meter Harness Connector Terminal Layout 10
Terminal and Reference Value for Combination Meter 10
Self-Diagnosis Mode of Combination Meter 11
CONSULT-III Function (METER/M&A) 13
Trouble Diagnosis 14
Symptom Chart 15
Power Supply and Ground Circuit Inspection 15
Vehicle Speed Signal Inspection 16
Engine Speed Signal Inspection 17
Fuel Level Sensor Signal Inspection 17
Fuel Gauge Fluctuates, Indicates Wrong Value, or Varies 19
Fuel Gauge Does Not Move to Full-position 19
DTC [U1000] CAN Communication Circuit 19
Electrical Component Inspection 19
Removal and Installation 20

WARNING LAMPS 21
Schematic 21
Wiring Diagram - WARN - 22
Oil Pressure Warning Lamp Stays Off (Ignition Switch ON) 30
Oil Pressure Warning Lamp Does Not Turn Off (Oil Pressure Is Normal) 32
Component Inspection 32

A/T INDICATOR 34
System Description 34
Wiring Diagram - AT/IND - 35
A/T Indicator Does Not Illuminate 36

CVT INDICATOR 38
System Description 38
Wiring Diagram - CVTIND - 38
CVT Indicator Does Not Illuminate 39

WARNING CHIME 41
Component Parts and Harness Connector Location 41
System Description 41
Wiring Diagram - CHIME - 44
Terminal and Reference Value for BCM 45
CONSULT-III Function (BCM) 45
Trouble Diagnosis 46
Combination Meter Buzzer Circuit Inspection 47
Front Door Switch LH Signal Inspection 48
Key Switch Signal Inspection (Without Intelligent Key) 49
Key Switch and Ignition Knob Switch Signal Inspection (With Intelligent Key, When Mechanical Key Is Used) 50
Lighting Switch Signal Inspection 52
Parking Brake Switch Signal Inspection 52
Electrical Component Inspection 53

SERVICE INFORMATION

PRECAUTION

Precaution for Supplemental Restraint System (SRS) "AIR BAG" and "SEAT BELT PRE-TENSIONER"

INFOID:0000000001704488

The Supplemental Restraint System such as “AIR BAG” and “SEAT BELT PRE-TENSIONER”, used along with a front seat belt, helps to reduce the risk or severity of injury to the driver and front passenger for certain types of collision. This system includes seat belt switch inputs and dual stage front air bag modules. The SRS system uses the seat belt switches to determine the front air bag deployment, and may only deploy one front air bag, depending on the severity of a collision and whether the front occupants are belted or unbelted.
Information necessary to service the system safely is included in the SR and SB section of this Service Manual.

WARNING:

- **To avoid rendering the SRS inoperative, which could increase the risk of personal injury or death in the event of a collision which would result in air bag inflation, all maintenance must be performed by an authorized NISSAN/INFINITI dealer.**
- **Improper maintenance, including incorrect removal and installation of the SRS, can lead to personal injury caused by unintentional activation of the system. For removal of Spiral Cable and Air Bag Module, see the SR section.**
- **Do not use electrical test equipment on any circuit related to the SRS unless instructed to in this Service Manual. SRS wiring harnesses can be identified by yellow and/or orange harnesses or harness connectors.**

PREPARATION

Commercial Service Tool

INFOID:0000000001704489

Tool name	Description
Power tool 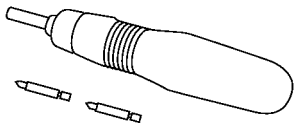 PBIC0191E	Loosening bolts and nuts

COMBINATION METERS

Component Parts and Harness Connector Location

INFOID:0000000001704490

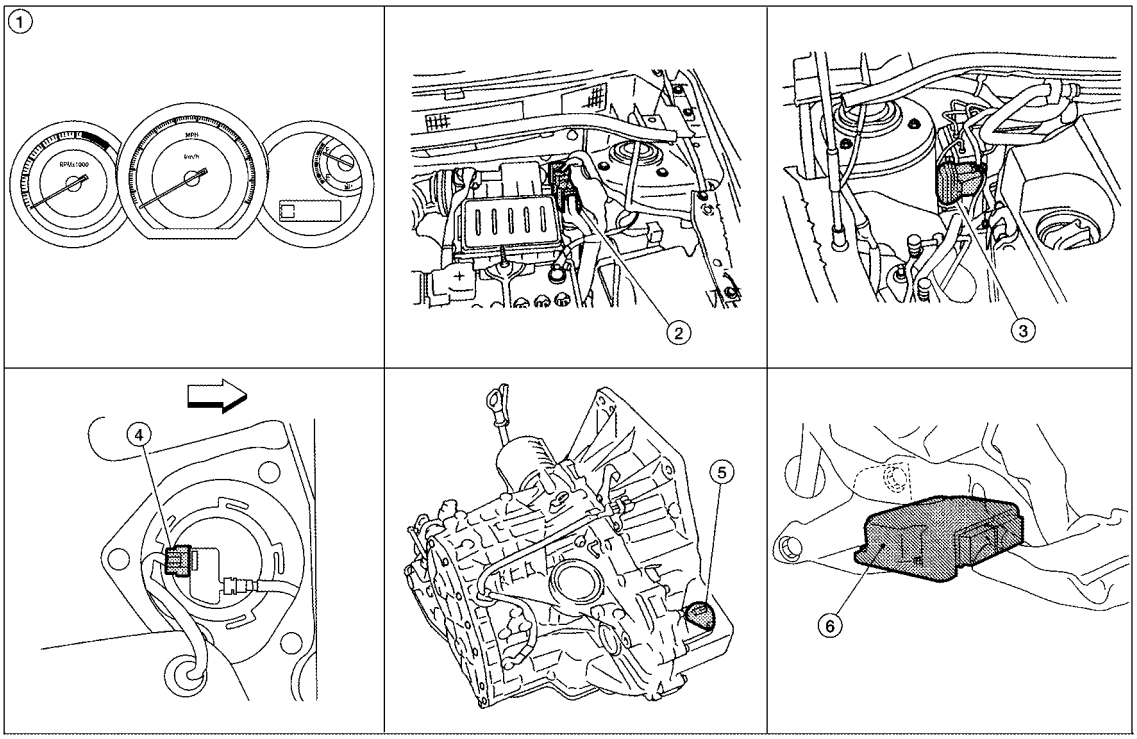

WKIA5450E

1. Combination meter M24
2. ECM E16
3. ABS actuator and electric unit (control unit) E33
4. Fuel level sensor unit and fuel pump (fuel level sensor) B100 (view with rear seat and inspection hole cover removed)
(⇐: Front)
5. Vehicle speed sensor F41 (A/T shown, M/T similar)
6. TCM E31 (view with instrument lower finisher removed)

System Description

INFOID:0000000001704491

UNIFIED METER CONTROL UNIT

- Speedometer, odo/trip meter, tachometer and fuel gauge are controlled by the unified meter control unit, which is built into the combination meter.
- Warning and indicator lamps are controlled by signals drawn from the CAN communication system, BCM (body control module), and components connected directly to the combination meter.
- Odo/trip meter and A/T indicator (with A/T) or CVT indicator (with CVT) segments can be checked in self-diagnosis mode.
- Meters/gauges can be checked in self-diagnosis mode.

POWER SUPPLY AND GROUND CIRCUIT

Power is supplied at all times
- through 10A fuse [No. 13, located in the fuse block (J/B)]
- to combination meter terminal 27.

With the ignition switch in the ON or START position, power is supplied
- through 10A fuse [No. 14, located in the fuse block (J/B)]
- to combination meter terminal 28.

Ground is supplied
- to combination meter terminals 21, 22 and 23
- through grounds M57 and M61.

SPEEDOMETER

With ABS

The ABS actuator and electric unit (control unit) provides a vehicle speed signal to the combination meter via CAN communication lines.

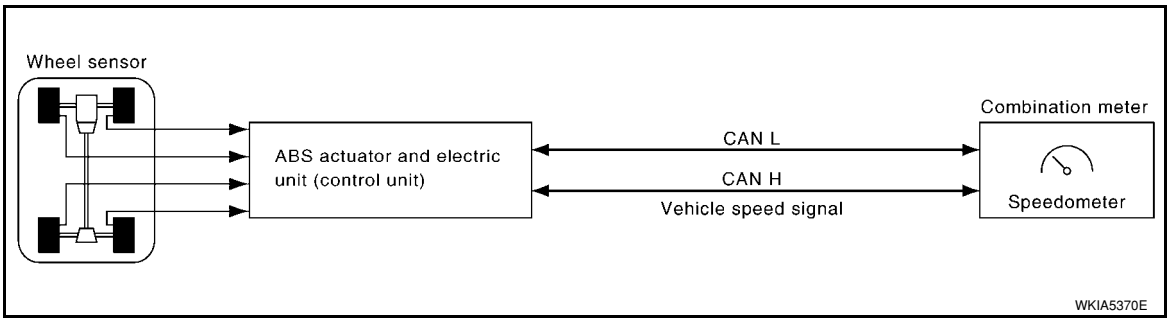

Without ABS or CVT

The vehicle speed sensor provides a vehicle speed signal to the combination meter for speedometer indication.

With CVT, Without ABS

The TCM provides a vehicle speed signal to the combination meter via CAN communication lines.

TACHOMETER

The tachometer indicates engine speed in revolutions per minute (rpm). The ECM provides an engine speed signal to combination meter via CAN communication lines.

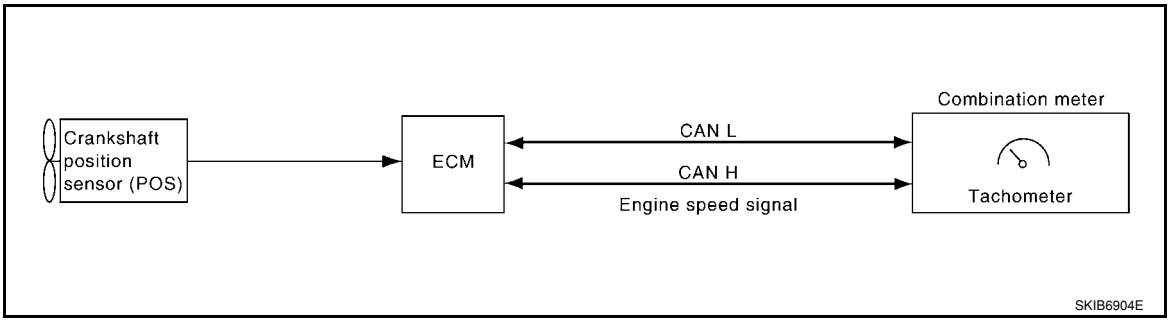

FUEL GAUGE

The fuel gauge indicates the approximate fuel level in the fuel tank.

The fuel gauge is regulated by the unified meter control unit and a variable resistor signal supplied

- to combination meter terminal 24
- through fuel level sensor unit and fuel pump terminal 5
- through fuel level sensor unit and fuel pump terminal 2
- from combination meter terminal 6.

ODO/TRIP METER

The vehicle speed signal and the memory signals from the meter memory circuit are processed by the combination meter and the mileage is displayed.

How to Change the Display

Refer to Owner's Manual for odo/trip meter operating instructions.

CAN COMMUNICATION SYSTEM DESCRIPTION

Refer to LAN-6 .

Arrangement of Combination Meter

INFOID:0000000001704492

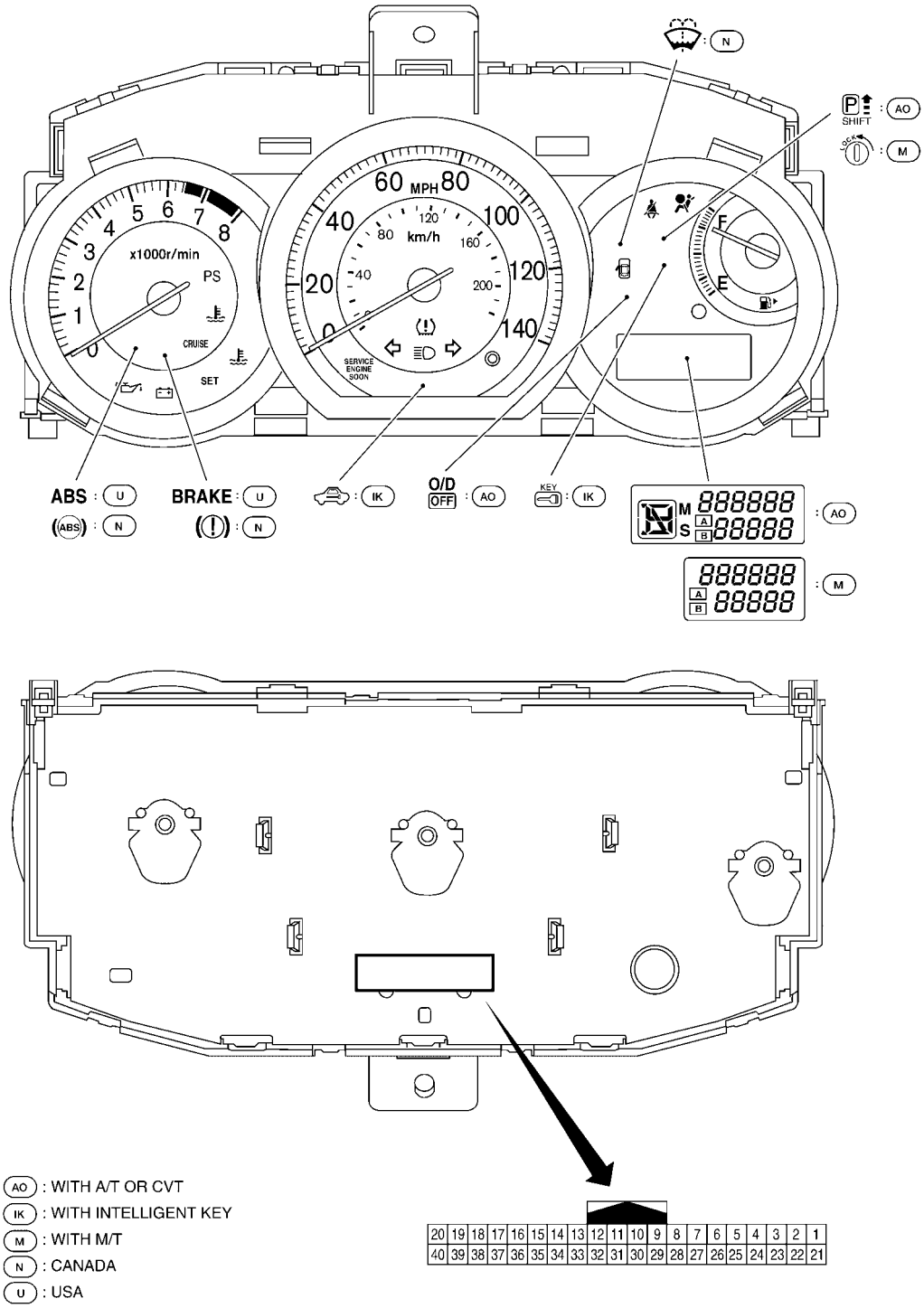

WKIA5451E

Internal Circuit

INFOID:0000000001704493

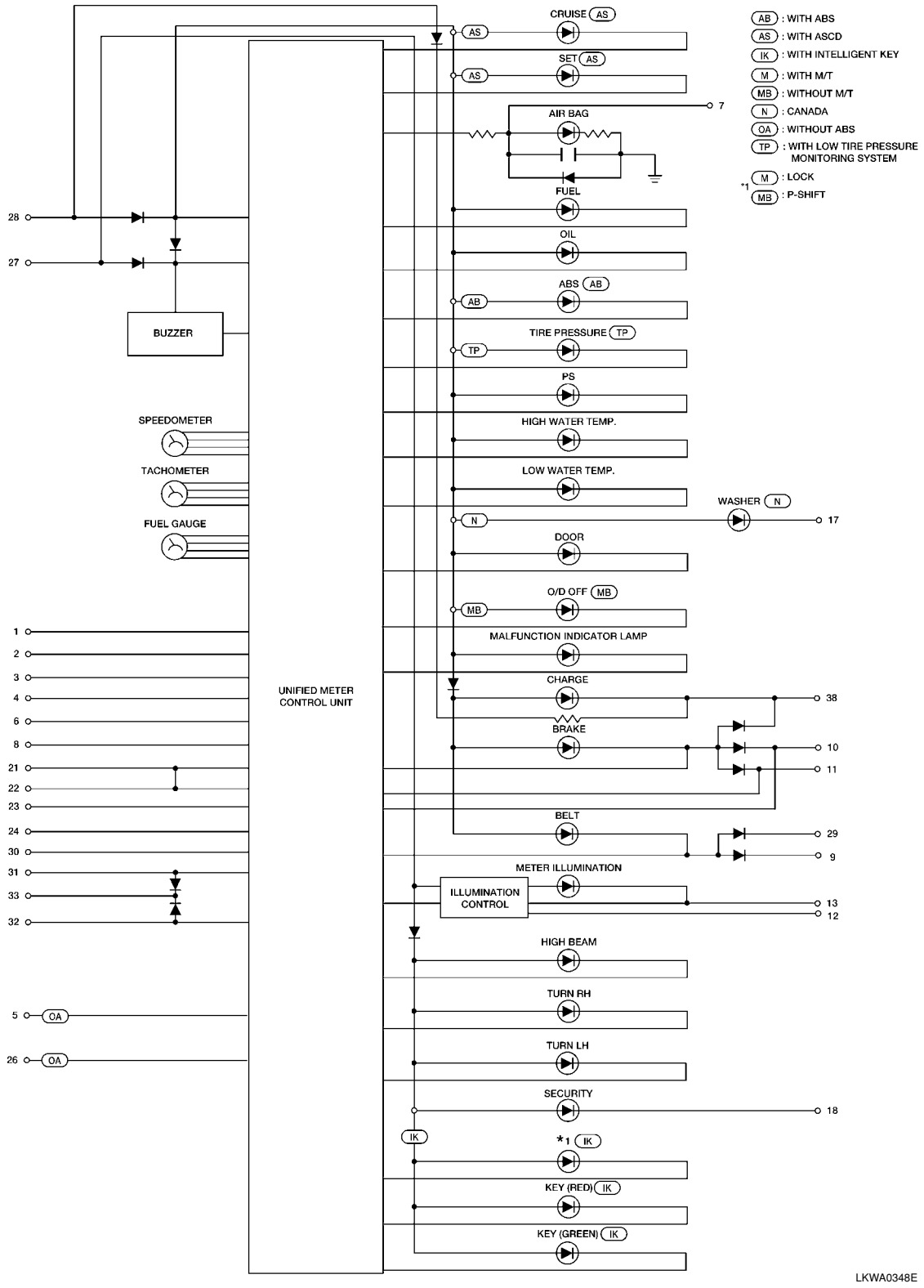

Wiring Diagram - METER -

INFOID:0000000001704494

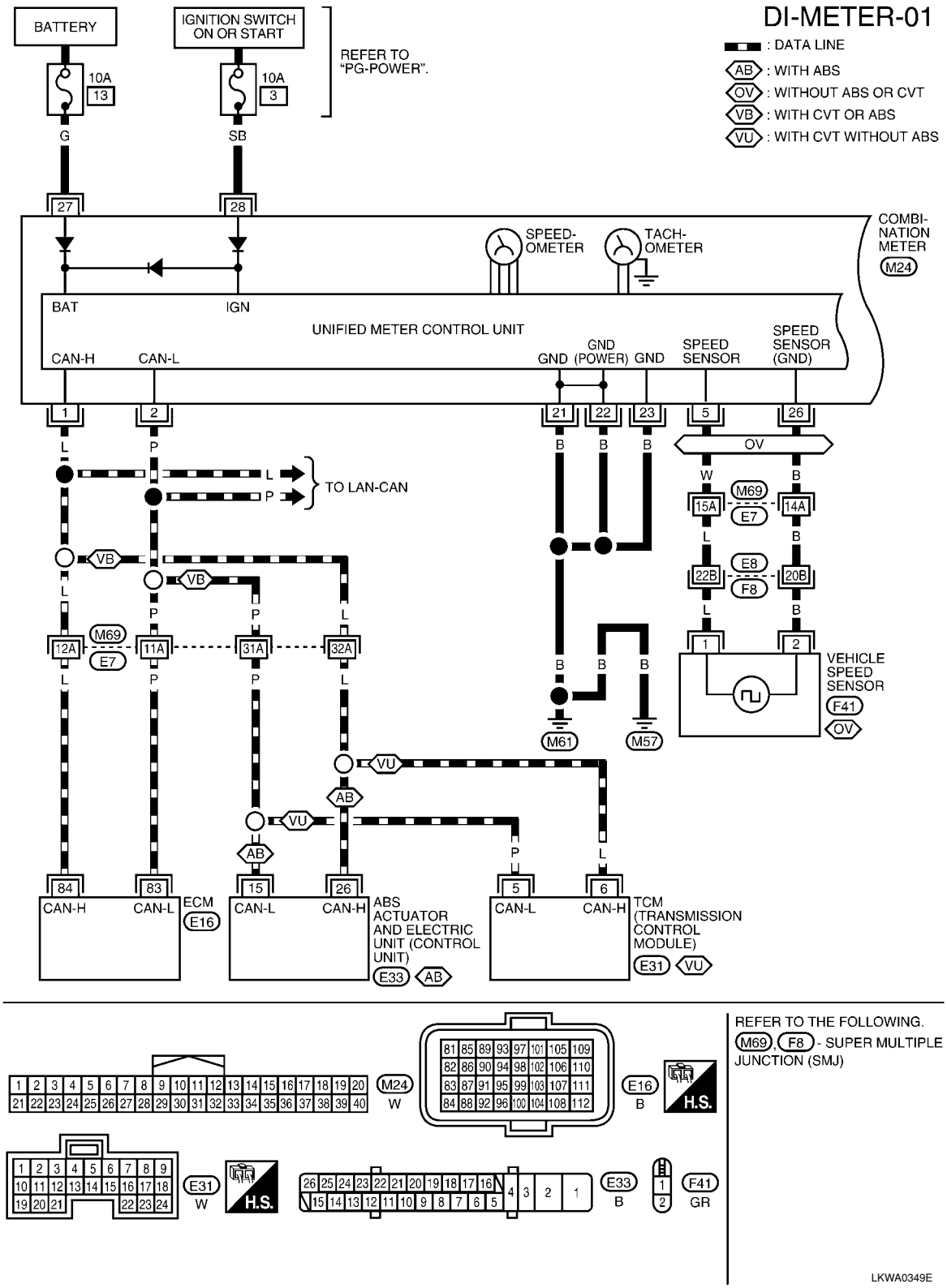

DI-METER-02

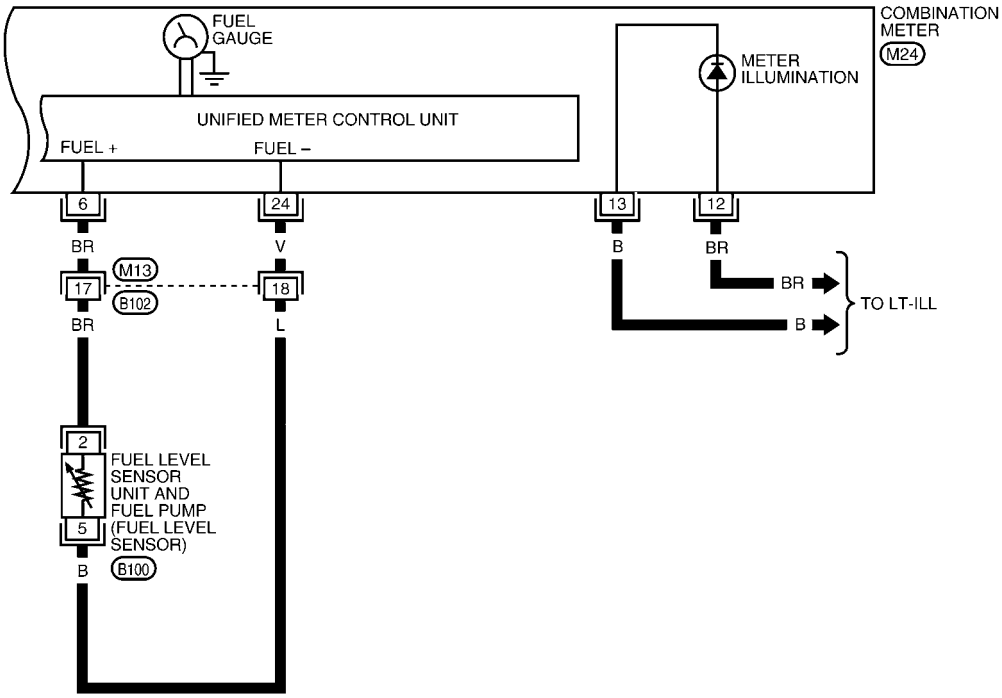

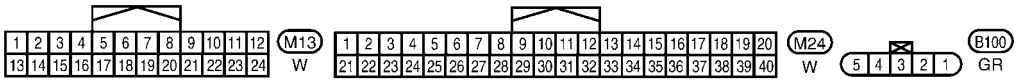

WKWA4989E

Combination Meter Harness Connector Terminal Layout

INFOID:0000000001704495

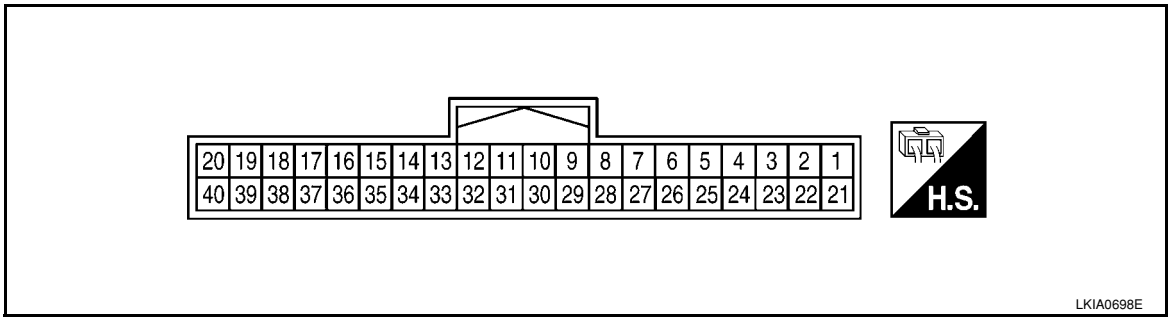

Terminal and Reference Value for Combination Meter

INFOID:0000000001704496

Terminal No.	Wire color	Item	Condition: Ignition switch	Condition: Operation or condition	Reference value (V) (Approx.)
1	L	CAN-H	—	—	—
2	P	CAN-L	—	—	—
3	G	Vehicle speed signal output (2-pulse)	ON	Speedometer operated [When vehicle speed is approx. 40 km/h (25 MPH)]	**NOTE:** Maximum voltage may be 5 V due to specifications (connected units). 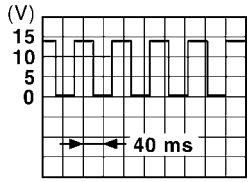 PKIC0642E
4	SB	Vehicle speed signal output (8-pulse)	ON	Speedometer operated [When vehicle speed is approx. 40 km/h (25 MPH)]	**NOTE:** Maximum voltage may be 12 V due to specifications (connected units). 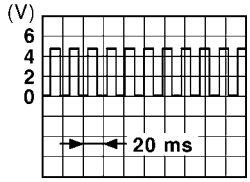 PKIC0643E
5	W	Vehicle speed signal (without ABS or CVT)	ON	Speedometer operated [When vehicle speed is approx. 20 km/h (12 MPH)]	240 Hz
6	BR	Fuel level sensor signal (+)	—	—	Refer to DI-19, "Electrical Component Inspection" .
8	P	O/D OFF switch	ON	O/D OFF switch pressed	0
				O/D OFF switch released	Battery voltage
9	Y	Seat belt buckle switch LH	ON	Unfastened (ON)	0
				Fastened (OFF)	Battery voltage
10	SB	Parking Brake switch	ON	Parking brake applied	0
				Parking brake released	Battery voltage
11	LG	Brake fluid level switch	ON	Brake fluid level low	0
				Brake fluid level normal	Battery voltage
12	BR	Illumination control switch (+)	—	—	Refer to LT-105, "System Description" .

Terminal No.	Wire color	Item	Condition		Reference value (V) (Approx.)
			Ignition switch	Operation or condition	
13	B	Illumination control switch (-)	—	—	Refer to LT-105, "System Description" .
17	G	Washer fluid level switch (Canada models)	ON	Washer fluid level low	0
				Washer fluid level normal	Battery voltage
21 22 23	B	Ground	—	—	0
24	V	Fuel level sensor ground (-)	ON	—	0
26	B	Vehicle speed sensor ground (without ABS or CVT)	ON	—	0
27	G	Battery power supply	OFF	—	Battery voltage
28	SB	Ignition switch ON or START	ON	—	Battery voltage
29	GR	Seat belt buckle switch RH	ON	Unfastened (ON)	0
				Fastened (OFF)	Battery voltage
30	G	Stop lamp switch	ON	Brake pedal depressed	Battery voltage
				Brake pedal released	0
31	V	A/T N-range input (with A/T)	ON	Transmission gear selector lever in N position	Battery voltage
				Transmission gear selector lever other than N position	0
32	W	A/T P-range input (with A/T)	ON	Transmission gear selector lever in P position	Battery voltage
				Transmission gear selector lever other than P position	0
33	Y	A/T PN output (with A/T)	ON	Transmission gear selector lever in P or N position	0
				Transmission gear selector lever other than P or N position	Battery voltage
35	BR	Engine coolant temperature signal output	ON	At idle [after warming up, approx. 80°C (176°F)] NOTE: The waveforms vary depending on engine coolant temperature.	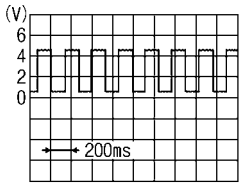 SKIB3651J
38	L	Generator	ON	Generator voltage low	0
				Generator voltage normal	Battery voltage

Self-Diagnosis Mode of Combination Meter

INFOID:0000000001704497

SELF-DIAGNOSIS MODE FUNCTION

- Self-diagnosis can check for continuity between meter control circuit and each meter (speedometer, tachometer and fuel gauge).
- Self-diagnosis can check for odo/trip meter and A/T indicator (with A/T) or CVT indicator (with CVT) segment, low-fuel level warning lamp, low water temperature indicator lamp, and high water temperature warning lamp.

OPERATION PROCEDURE

1. Turn the ignition switch ON, and switch the odo/trip meter to “trip A” or “trip B”.
   NOTE:

If the diagnosis function is activated with “trip A” displayed, the mileage on “trip A” will indicate “0000.0”, but the actual trip mileage will be retained. (The same applies for “trip B”.)

2. Turn ignition switch OFF.
3. While pushing the odo/trip meter switch (1), turn the ignition switch ON.
4. Confirm that the trip meter displays “0000.0”.
5. Push the odo/trip meter switch at least 3 times. (Within 7 seconds after the ignition switch is turned ON.)

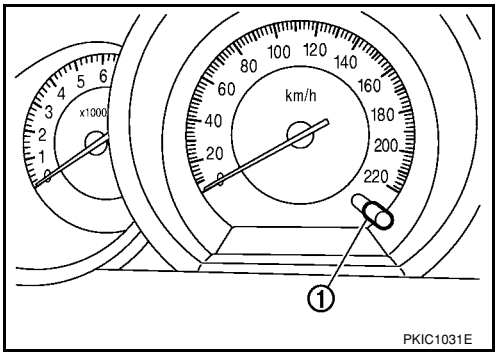

6. All the segments on the odo/trip meter, and simultaneously the low-fuel warning lamp indicator illuminates. At this time, the unified meter control unit is turned to self-diagnosis mode.
   - M/T MODELS (1)
   - A/T AND CVT MODELS (2)

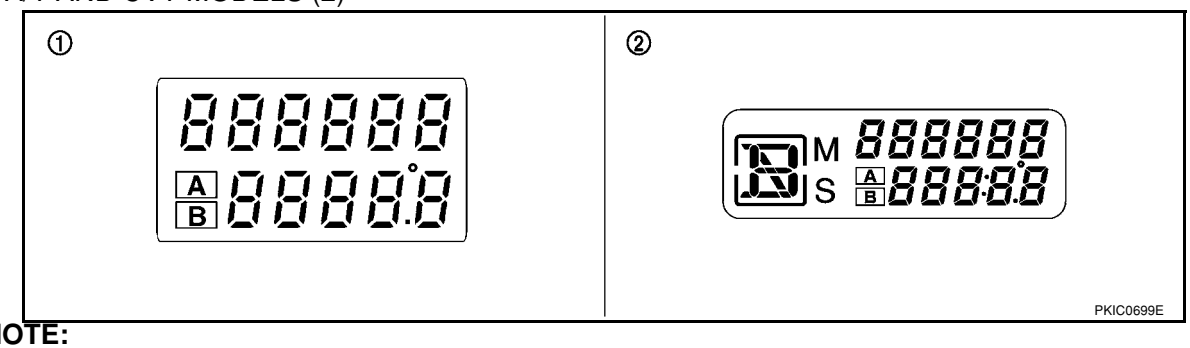

NOTE:
- Check combination meter power supply and ground circuit when self-diagnosis mode of combination meter does not start. Replace combination meter if normal. Refer to IP-11, "Removal and Installation" .
- If any of the segments is not displayed, replace combination meter. Refer to IP-11, "Removal and Installation" .

7. Each meter activates while pressing odo/trip meter switch. (At this time, the low-fuel warning lamp turns off, low water temperature indicator lamp and high water temperature warning lamp turn on.)

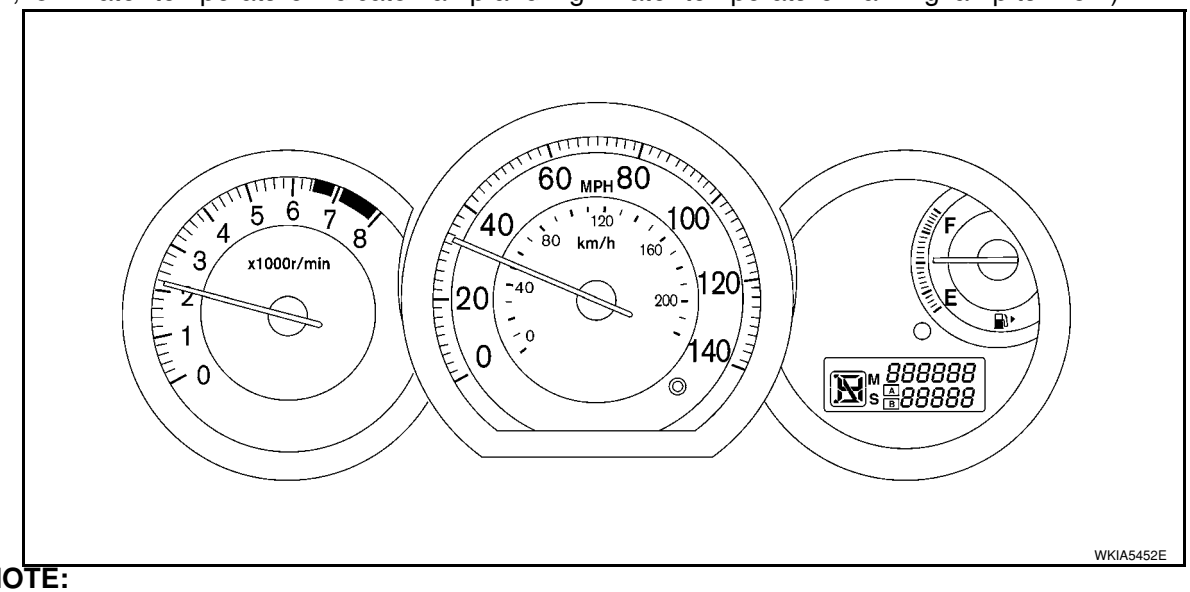

NOTE:
If any of the meter and gages are not activated, replace combination meter. Refer to IP-11, "Removal and Installation" .

CONSULT-III Function (METER/M&A)

INFOID:0000000001704498

CONSULT-III can display each diagnostic item using the diagnostic test modes shown following.

METER diagnosis mode	Description
SELF-DIAG RESULTS	Displays combination meter self-diagnosis results.
DATA MONITOR	Displays combination meter input/output data in real time.
CAN DIAG SUPPORT MNTR	The result of transmit/receive diagnosis of CAN communication can be read.

SELF-DIAGNOSTIC RESULTS

Display Item List

CONSULT-III display	Malfunction	Reference page
CAN COMM CIRC [U1000]	Malfunction is detected in CAN communication lines. **CAUTION:** **Even when there is no malfunction on CAN communication system, malfunction may be misinterpreted when battery has low voltage (when maintaining 7 - 8 V for about 2 seconds) or 10A fuse [No. 14, located in the fuse block (J/B)] is removed.**	DI-19
VEHICLE SPEED CIRC [B2205]	Malfunction is detected when an erroneous speed signal is input. **CAUTION:** **Even when there is no malfunction on speed signal system, malfunctions may be misinterpreted when battery has low voltage (when maintaining 7 - 8 V for about 2 seconds).**	DI-16

NOTE:
"TIME" indicates the following.
- 0: Indicates that a malfunction is detected at present.
- 1-63: Indicates that a malfunction was dectected in the past. (Displays number of ignition switch OFF → ON cycles after malfunction is detected. Self-diagnostic result is erased when "63" is exceded.)

DATA MONITOR

Display Item List

Display item [Unit]	MAIN SIGNALS	SELECTION FROM MENU	Contents
SPEED METER [km/h]	X	X	The value of vehicle speed signal, which is input from ABS actuator and electric unit (control unit).
SPEED OUTPUT [km/h]	X	X	The value of vehicle speed signal, which is transmitted to each unit with CAN communication.
TACHO METER [rpm]	X	X	The value of engine speed signal, which is input from ECM.
W TEMP METER [°C]	X	X	The value of engine coolant temperature signal, which is input from ECM.
FUEL METER [lit.]	X	X	The value, which processes a resistance signal from fuel gauge.
DISTANCE [km]	X	X	The value, which is calculated by vehicle speed signal from ABS actuator and electric unit (control unit), fuel gauge and fuel consumption signal from ECM.
FUEL W/L [ON/OFF]	X	X	Indicates [ON/OFF] condition of low-fuel warning lamp.
C-ENG W/L [ON/OFF]		X	Indicates [ON/OFF] condition of malfunction indicator lamp (MIL).
AIR PRES W/L		X	Indicates [ON/OFF] condition of low tire pressure warning lamp.
SEAT BELT W/L		X	Indicates [ON/OFF] condition of seat belt warning lamp.
BUZZER [ON/OFF]	X	X	Indicates [ON/OFF] condition of buzzer.
DOOR W/L [ON/OFF]		X	Indicates [ON/OFF] condition of door warning lamp.
HI-BEAM IND [ON/OFF]		X	Indicates [ON/OFF] condition of high beam indicator lamp.

Display item [Unit]	MAIN SIGNALS	SELECTION FROM MENU	Contents
TURN IND [ON/OFF]		X	Indicates [ON/OFF] condition of turn indicator.
OIL W/L [ON/OFF]		X	Indicates [ON/OFF] condition of oil pressure warning lamp.
ABS W/L [ON/OFF]		X	Indicates [ON/OFF] condition of ABS warning lamp.
BRAKE W/L [ON/OFF]		X	Indicates [ON/OFF] condition of brake warning lamp.*
KEY G W/L [ON/OFF]		X	Indicates [ON/OFF] condition of KEY warning lamp (green).
KEY R W/L [ON/OFF]		X	Indicates [ON/OFF] condition of KEY warning lamp (red).
KEY KNOB W/L [ON/OFF]		X	Indicates [ON/OFF] condition of LOCK warning lamp.
PNP P SW [ON/OFF]	X	X	Indicates [ON/OFF] condition of inhibitor P switch.
PNP N SW [ON/OFF]	X	X	Indicates [ON/OFF] condition of inhibitor N switch.
O/D OFF SW [ON/OFF]		X	Indicates [ON/OFF] condition of O/D OFF switch.
BRAKE SW [ON/OFF]		X	Indicates [ON/OFF] condition of parking brake switch.
P RANGE IND [ON/OFF]	X	X	Indicates [ON/OFF] condition of A/T or CVT shift P range indicator.
R RANGE IND [ON/OFF]	X	X	Indicates [ON/OFF] condition of A/T or CVT shift R range indicator.
N RANGE IND [ON/OFF]	X	X	Indicates [ON/OFF] condition of A/T or CVT shift N range indicator.
D RANGE IND [ON/OFF]	X	X	Indicates [ON/OFF] condition of A/T or CVT shift D range indicator.
2 RANGE IND [ON/OFF]	X	X	Indicates [ON/OFF] condition of A/T shift 2 range indicator.
L RANGE IND [ON/OFF]	X	X	Indicates [ON/OFF] condition of CVT shift L range indicator.
1 RANGE IND [ON/OFF]	X	X	Indicates [ON/OFF] condition of A/T shift 1 range indicator.
CRUISE IND [ON/OFF]		X	Indicates [ON/OFF] condition of CRUISE indicator.
SET IND [ON/OFF]		X	Indicates [ON/OFF] condition of SET indicator.
O/D OFF W/L [ON/OFF]		X	Indicates [ON/OFF] condition of O/D OFF indicator lamp.
e-4WD W/L [ON/OFF]		X	This item is not used for this model. “OFF” is always displayed.
EPS W/L [ON/OFF]		X	Indicates [ON/OFF] condition of EPS warning lamp.

NOTE:

Some items are not available due to vehicle specification.

*: The monitor will indicate “OFF” even though the brake warning lamp is on if either of the following conditions exist.

- The parking brake is engaged
- The brake fluid level is low

Trouble Diagnosis

INFOID:0000000001704499

HOW TO PERFORM TROUBLE DIAGNOSIS

1. Confirm the symptom or customer complaint.
2. Perform preliminary check. Refer to "PRELIMINARY CHECK" .
3. According to the symptom chart, repair or replace the cause of the malfunction. Refer to DI-15, "Symptom Chart" .
4. Does the meter operate normally? If so, GO TO 5. If not, GO TO 2.
5. Inspection End.

PRELIMINARY CHECK

1.CHECK SELF-DIAGNOSIS OPERATION OF COMBINATION METER

Perform self-diagnosis of combination meter. Refer to DI-11, "Self-Diagnosis Mode of Combination Meter" .

Does self-diagnosis mode operate?

YES >> GO TO 2.

NO >> Check power supply and ground circuit of combination meter. Refer to DI-15, "Power Supply and Ground Circuit Inspection" .

2. CHECK COMBINATION METER (CONSULT-III)

Select “METER/M&A” on CONSULT-III and perform self-diagnosis of combination meter. Refer to DI-13, "CONSULT-III Function (METER/M&A)" .

Self-diagnostic results content

No malfunction detected>> Refer to DI-15, "Symptom Chart" .
Malfunction detected>> Refer to DI-13, "CONSULT-III Function (METER/M&A)" .

Symptom Chart

INFOID:0000000001704500

Symptom	Possible cause
Improper speedometer and odo/trip meter indication.	Refer to DI-16, "Vehicle Speed Signal Inspection" .
Improper tachometer indication.	Refer to DI-17, "Engine Speed Signal Inspection" .
Improper fuel gauge indication.	Refer to DI-17, "Fuel Level Sensor Signal Inspection" .
Low-fuel warning lamp indication is irregular.	
Improper A/T position indication.	Refer to DI-36, "A/T Indicator Does Not Illuminate" .
Improper CVT position indication.	Refer to DI-39, "CVT Indicator Does Not Illuminate" .

Power Supply and Ground Circuit Inspection

INFOID:0000000001704501

1. CHECK FUSE

Check for blown combination meter fuses.

Power source	Fuse No.
Battery	13
Ignition switch ON or START	14

OK or NG

OK >> GO TO 2.
NG >> Be sure to eliminate cause of malfunction before installing new fuse. Refer to PG-3 .

2. CHECK POWER SUPPLY CIRCUIT

Check voltage between combination meter harness connector terminals and ground.

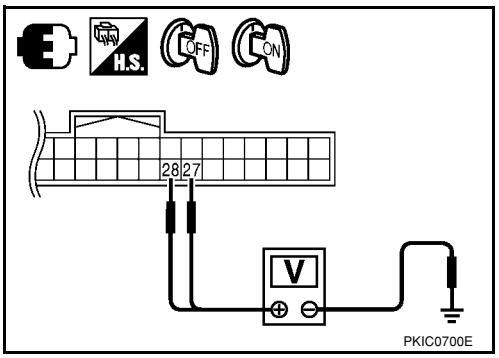

Terminals			Ignition switch position	
(+)		(–)	OFF	ON
Combination meter connector	Terminal			
M24	27	Ground	Battery voltage	Battery voltage
	28		0 V	Battery voltage

OK or NG

OK >> GO TO 3.
NG >> Repair harness or connector.

3. CHECK GROUND CIRCUIT

1. Turn ignition switch OFF.
2. Disconnect combination meter connector.

3. Check continuity between combination meter harness connector terminals and ground.

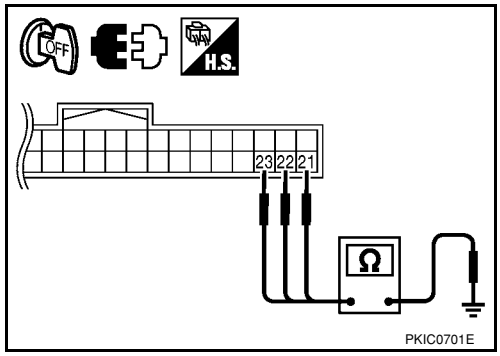

Combination meter connector	Terminal		Continuity
M24	21	Ground	Yes
	22		
	23		

OK or NG

OK >> Replace combination meter. Refer to IP-11, "Removal and Installation" .

NG >> Repair harness or connector.

Vehicle Speed Signal Inspection

INFOID:0000000001704502

Symptom:

- Improper speedometer and odo/trip meter indication.
- Display VEHICLE SPEED CIRC [B2205] at the result of self-diagnosis for combination meter.

WITH ABS

1. CHECK COMBINATION METER INPUT SIGNAL

1. Start engine and select “METER/M&A” on CONSULT-III.
2. Using “SPEED METER” on “DATA MONITOR”, compare the value of “DATA MONITOR” with speedometer pointer of combination meter.

OK or NG

OK >> Perform ABS actuator and electric unit (control unit) self-diagnosis. Refer to BRC-18, "CONSULT-III Function (ABS)" .

NG >> Replace combination meter. Refer to IP-11, "Removal and Installation" .

WITHOUT ABS OR CVT

1. CHECK VEHICLE SPEED SENSOR CIRCUITS

1. Remove vehicle speed sensor.
2. Turn ignition switch ON.
3. Rotate vehicle speed sensor while checking voltage between combination meter harness connector M24 terminals 5 and 26.

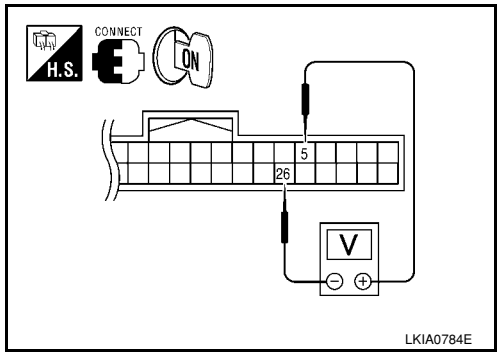

Terminals				Voltage (Approx.)
(+)		(–)		
Connector	Terminal	Connector	Terminal	
M24	5	M24	26	0.5

OK or NG

OK >> Replace combination meter. Refer to IP-11, "Removal and Installation" .

NG >> GO TO 2.

2. CHECK VEHICLE SPEED SENSOR

1. Turn ignition switch OFF.
2. Disconnect vehicle speed sensor connector.
3. Check resistance between vehicle speed sensor terminals 1 and 2.

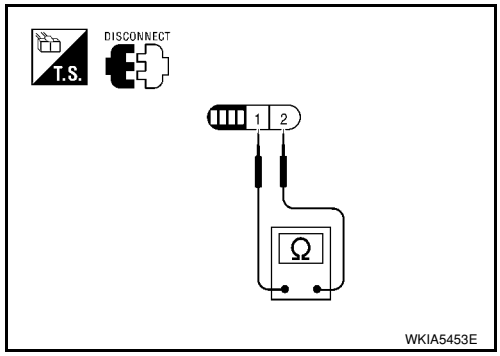

Terminals				Resistance value (Approx.)
(+)		(–)		
Component	Terminal	Component	Terminal	
Vehicle speed sensor	1	Vehicle speed sensor	2	250Ω

OK or NG

OK >> Check harness or connector between combination meter and vehicle speed sensor.
NG >> Replace vehicle speed sensor.

WITH CVT, WITHOUT ABS

1. CHECK COMBINATION METER INPUT SIGNAL

1. Start engine and select “METER/M&A” on CONSULT-III.
2. Using “SPEED METER” on “DATA MONITOR”, compare the value of “DATA MONITOR” with speedometer pointer of combination meter.

OK or NG

OK >> Perform TCM self-diagnosis. Refer to CVT-47, "CONSULT-III Function (TRANSMISSION)" .
NG >> Replace combination meter. Refer to IP-11, "Removal and Installation" .

Engine Speed Signal Inspection

INFOID:0000000001704503

Symptom: Improper tachometer indication.

1. CHECK COMBINATION METER INPUT SIGNAL

1. Start engine and select “METER/M&A” on CONSULT-III.
2. Using “TACHO METER” on “DATA MONITOR”, compare the value of “DATA MONITOR” with tachometer pointer of combination meter.

OK or NG

OK >> Perform ECM self-diagnosis. Refer to EC-109, "CONSULT-II Function (ENGINE)" .
NG >> Replace combination meter. Refer to IP-11, "Removal and Installation" .

Fuel Level Sensor Signal Inspection

INFOID:0000000001704504

Symptom:
- Improper fuel gauge indication.
- Low-fuel warning lamp indication is irregular.

NOTE:
The following symptoms do not indicate a malfunction.
- Depending on vehicle position or driving circumstance, the fuel level in the tank shifts and the indication may fluctuate.
- If the vehicle is fueled with the ignition switch ON, the indication will update slowly.
- If the vehicle is tilted when the ignition switch is turned ON, fuel in the tank may flow to one direction resulting in a change of reading.

1. CHECK COMBINATION METER INPUT SIGNAL

1. Select “METER/M&A” on CONSULT-III.
2. Using “FUEL METER” on “DATA MONITOR”, compare the value of “DATA MONITOR” with fuel gauge pointer of combination meter.

Fuel gauge pointer	Reference value of data monitor [lit.]
Full	Approx. 49
3/4	Approx. 34
1/2	Approx. 22
1/4	Approx. 10
Empty	Approx. 4

OK or NG

OK >> GO TO 2.
NG >> Replace combination meter. Refer to IP-11, "Removal and Installation" .

2. CHECK HARNESS CONNECTOR

1. Turn ignition switch OFF.
2. Check combination meter and fuel level sensor unit terminals (meter-side and harness-side) for poor connection.

OK or NG

OK >> GO TO 3.
NG >> Repair or replace terminals or connectors.

3. CHECK FUEL LEVEL SENSOR UNIT CIRCUIT

1. Disconnect combination meter connector and fuel level sensor unit connector.
2. Check continuity between combination meter harness connector (A) and fuel level sensor unit and fuel pump harness connector (B).

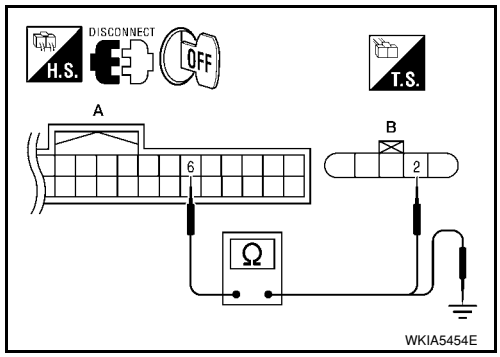

A		B		Continuity
Connector	Terminal	Connector	Terminal	
M24	6	B100	2	Yes

3. Check continuity between combination meter harness connector (A) and ground.

A		Ground	Continuity
Connector	Terminal		
M24	6		No

OK or NG

OK >> GO TO 4.
NG >> Repair harness or connector.

4. CHECK FUEL LEVEL SENSOR UNIT GROUND CIRCUIT

1. Check continuity between combination meter harness connector (A) and fuel level sensor unit and fuel pump harness connector (B).

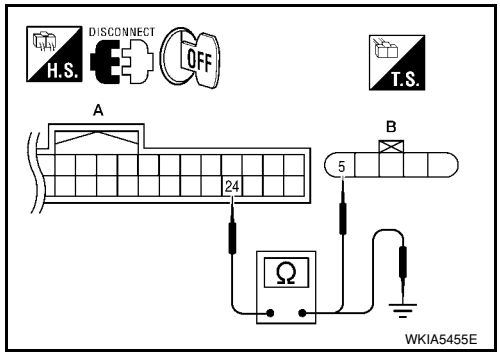

A		B		Continuity
Connector	Terminal	Connector	Terminal	
M24	24	B100	5	Yes

2. Check continuity between combination meter harness connector (A) and ground.

A		Ground	Continuity
Connector	Terminal		
M24	24		No

OK or NG

OK >> GO TO 5.
NG >> Repair harness or connector.

5. CHECK FUEL LEVEL SENSOR UNIT

Check fuel level sensor unit. Refer to DI-19, "Electrical Component Inspection" .

OK or NG

OK >> Check fuel level sensor unit installation, and check whether the float arm interferes or binds with any of the internal components in the fuel tank. Repair or replace malfunctioning part, if necessary.
NG >> Replace fuel level sensor unit.

Fuel Gauge Fluctuates, Indicates Wrong Value, or Varies

INFOID:0000000001704505

1. CHECK FUEL GAUGE FLUCTUATION

Test drive vehicle to see if gauge fluctuates only during driving or at the instant of stopping.

Does the indication value vary only during driving or at the at the instant of stopping?

YES >> The pointer fluctuation may be caused by fuel level change in the fuel tank. Condition is normal.
NO >> Ask the customer about the situation when the symptom occurs in detail, and perform the trouble diagnosis.

Fuel Gauge Does Not Move to Full-position

INFOID:0000000001704506

1. OBSERVE FUEL GAUGE

Does it take a long time for the pointer to move to FULL position?

YES or NO

YES >> GO TO 2.
NO >> GO TO 3.

2. IDENTIFY FUELING CONDITION

Was the vehicle fueled with the ignition switch ON?

YES or NO

YES >> Be sure to fuel the vehicle with the ignition switch OFF. Otherwise, it will take a long time to move to FULL position because of the characteristic of the fuel gauge.
NO >> GO TO 3.

3. OBSERVE VEHICLE POSITION

Is the vehicle parked on an incline?

YES or NO

YES >> Check the fuel level indication with vehicle on a level surface.
NO >> GO TO 4.

4. OBSERVE FUEL GAUGE POINTER

During driving, does the fuel gauge pointer move gradually toward EMPTY position?

YES or NO

YES >> Check the components. Refer to DI-19, "Electrical Component Inspection" .
NO >> The float arm may interfere or bind with any of the components in the fuel tank.

DTC [U1000] CAN Communication Circuit

INFOID:0000000001704507

Symptom: Display CAN COMM CIRC [U1000] at the result of self-diagnosis for combination meter.

1. CHECK CAN COMMUNICATION

1. Select "SELF-DIAG RESULTS" mode for "METER/M&A" with CONSULT-III.
2. Print out CONSULT-III screen.

>> Go to "CAN SYSTEM". Refer to LAN-15, "Trouble Diagnosis Flow Chart".

Electrical Component Inspection

INFOID:0000000001704508

FUEL LEVEL SENSOR UNIT CHECK

For removal, refer to FL-5, "Removal and Installation" .

Check Fuel Level Sensor Unit and Fuel Pump

Check resistance between terminals 2 and 5.

Terminals		Float position mm (in)			Resistance value (Ω) (Approx.)
2	5	1*	Full	160 (8.07)	6
		2*	Empty	20 (1.02)	80

1* and 2*: When float rod is in contact with stopper.

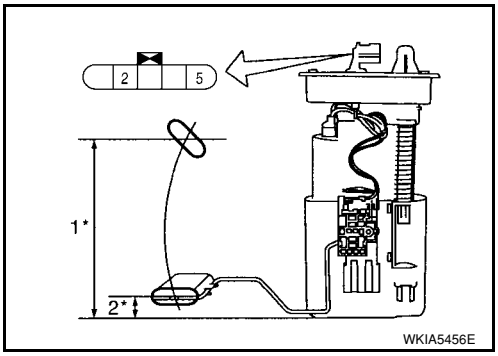

Check Fuel Level Sensor Unit and Fuel Pump Harness
Check continuity at the following terminals.

Terminal	Continuity
2 - Signal terminal (A)	Yes
5 - Ground terminal (B)	

- If the results of check are NG, replace fuel pump assembly. If the results of check are OK, replace fuel level sensor unit.

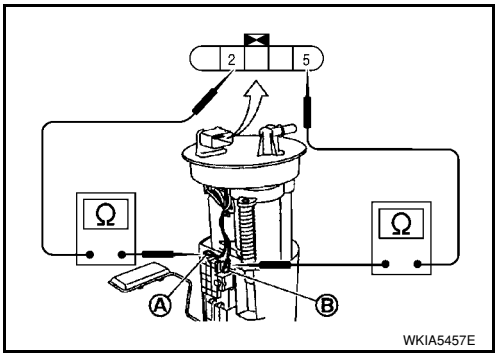

Removal and Installation

INFOID:0000000001704509

COMBINATION METER

Refer to IP-11, "Removal and Installation".

WARNING LAMPS

Schematic

INFOID:0000000001704510

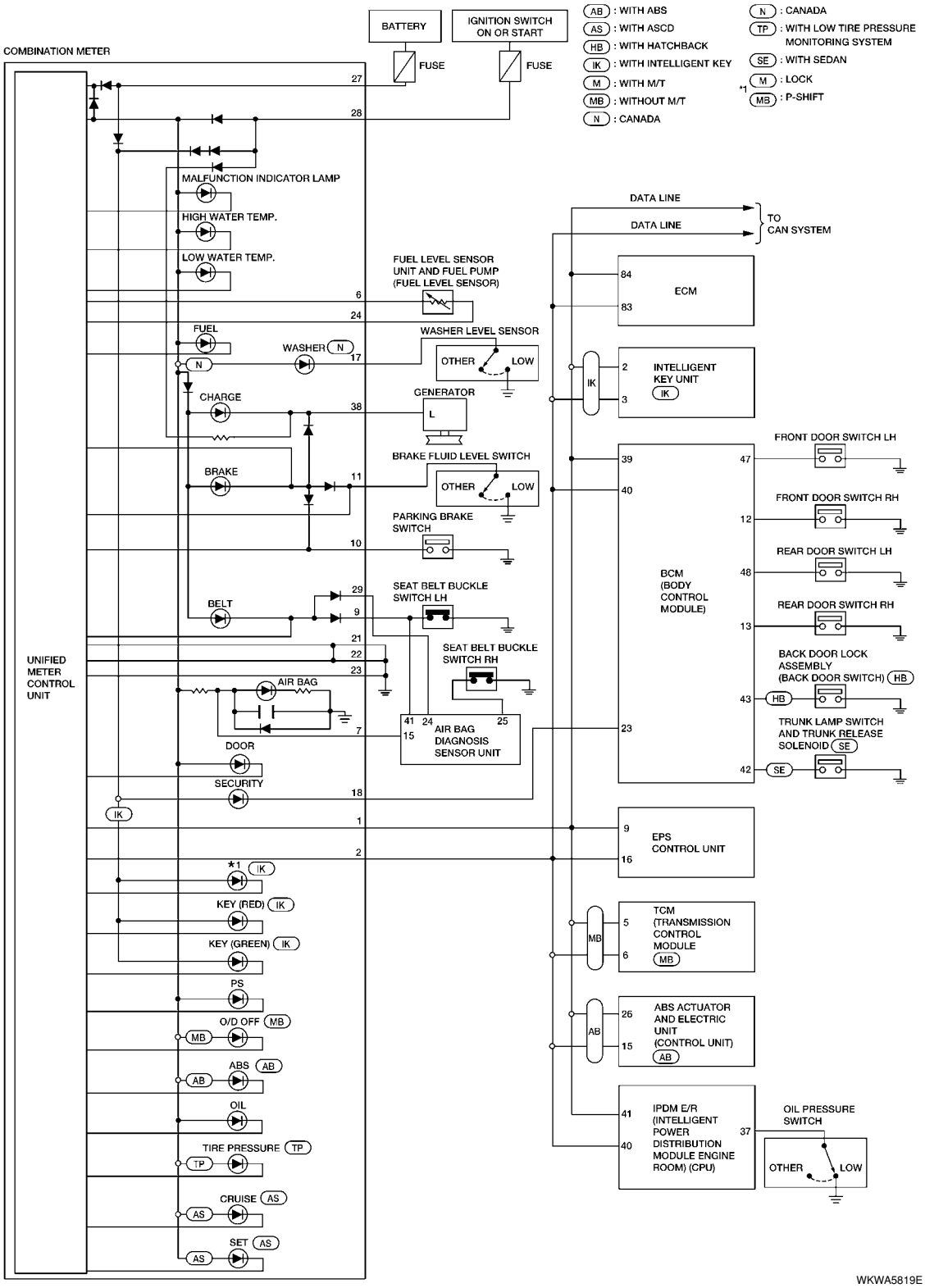

Wiring Diagram - WARN -

INFOID:0000000001704511

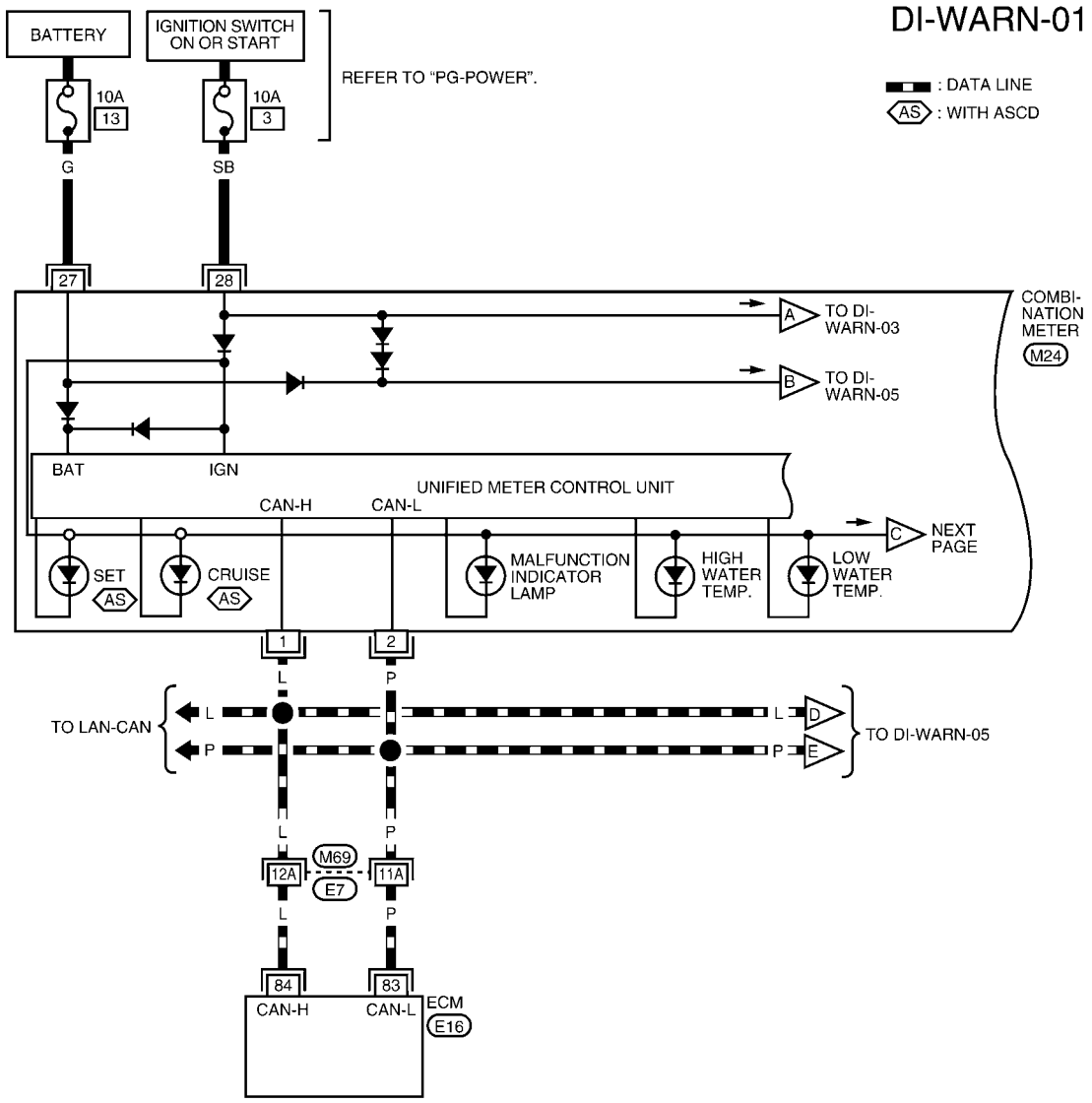

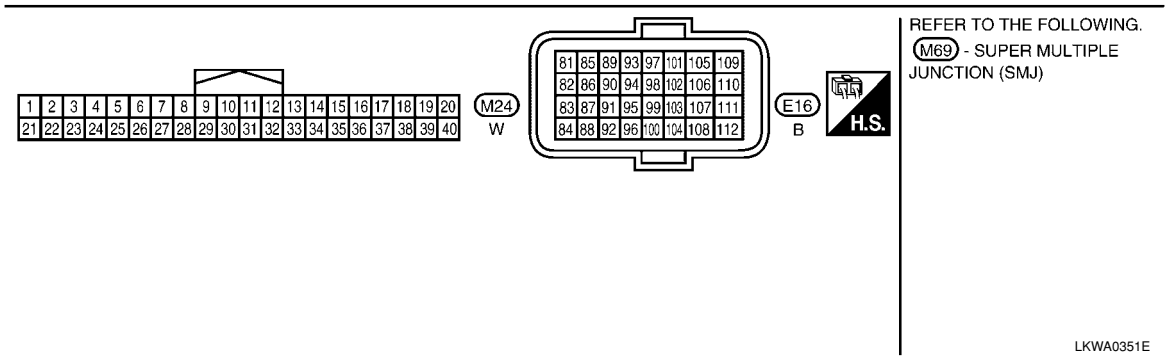

DI-WARN-02

N : CANADA

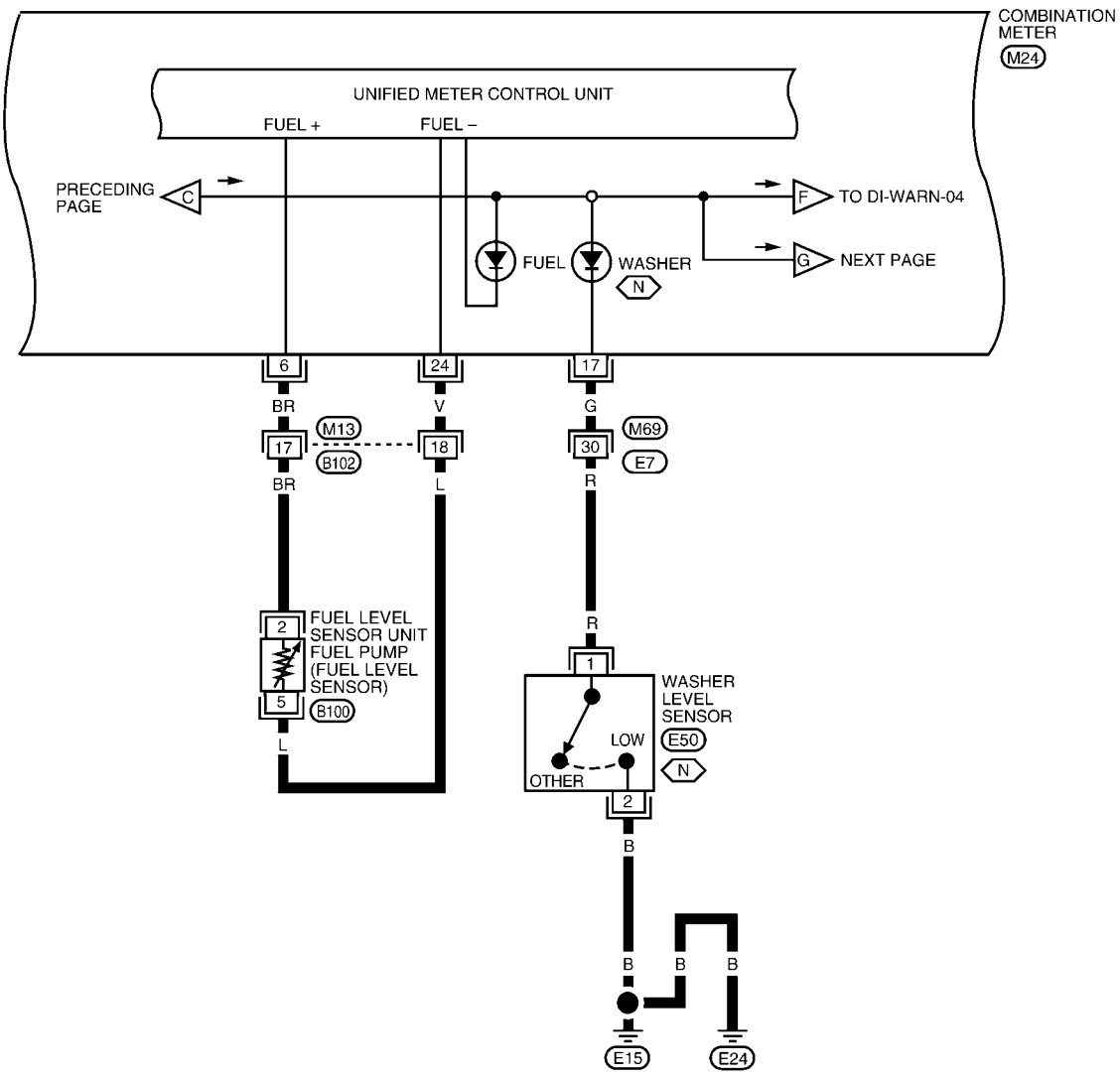

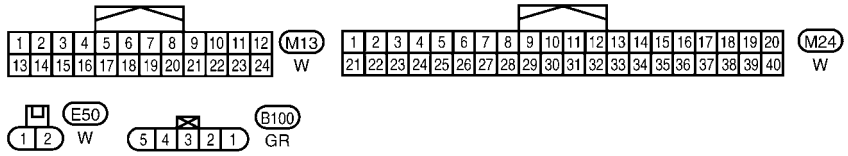

REFER TO THE FOLLOWING.
M69 - SUPER MULTIPLE JUNCTION (SMJ)

LKWA0352E

DI-WARN-03

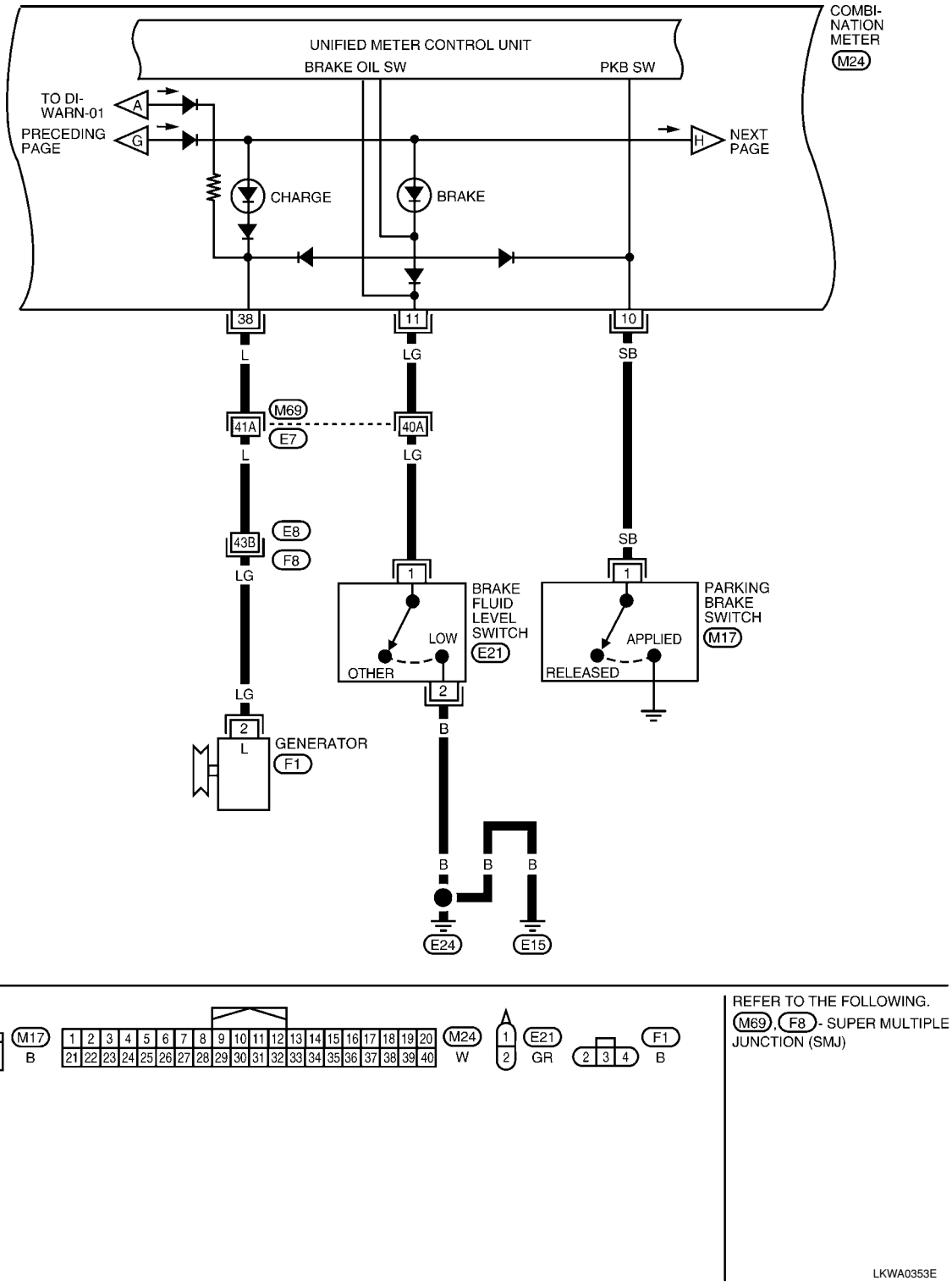
COMBI-
NATION
METER
M24
UNIFIED METER CONTROL UNIT
BRAKE OIL SW
PKB SW
TO DI-
WARN-01
A
PRECEDING
PAGE
G
H
NEXT
PAGE
CHARGE
BRAKE
38
11
10
L
LG
SB
M69
41A
E7
40A
L
LG
E8
43B
F8
LG
SB
1
BRAKE
FLUID
LEVEL
SWITCH
LOW
E21
OTHER
2
1
PARKING
BRAKE
SWITCH
APPLIED
M17
RELEASED
LG
2
L
GENERATOR
F1
B
B
B
B
E24
E15
M17
B
M24
W
E21
GR
F1
B
REFER TO THE FOLLOWING.
M69, F8 - SUPER MULTIPLE
JUNCTION (SMJ)
LKWA0353E

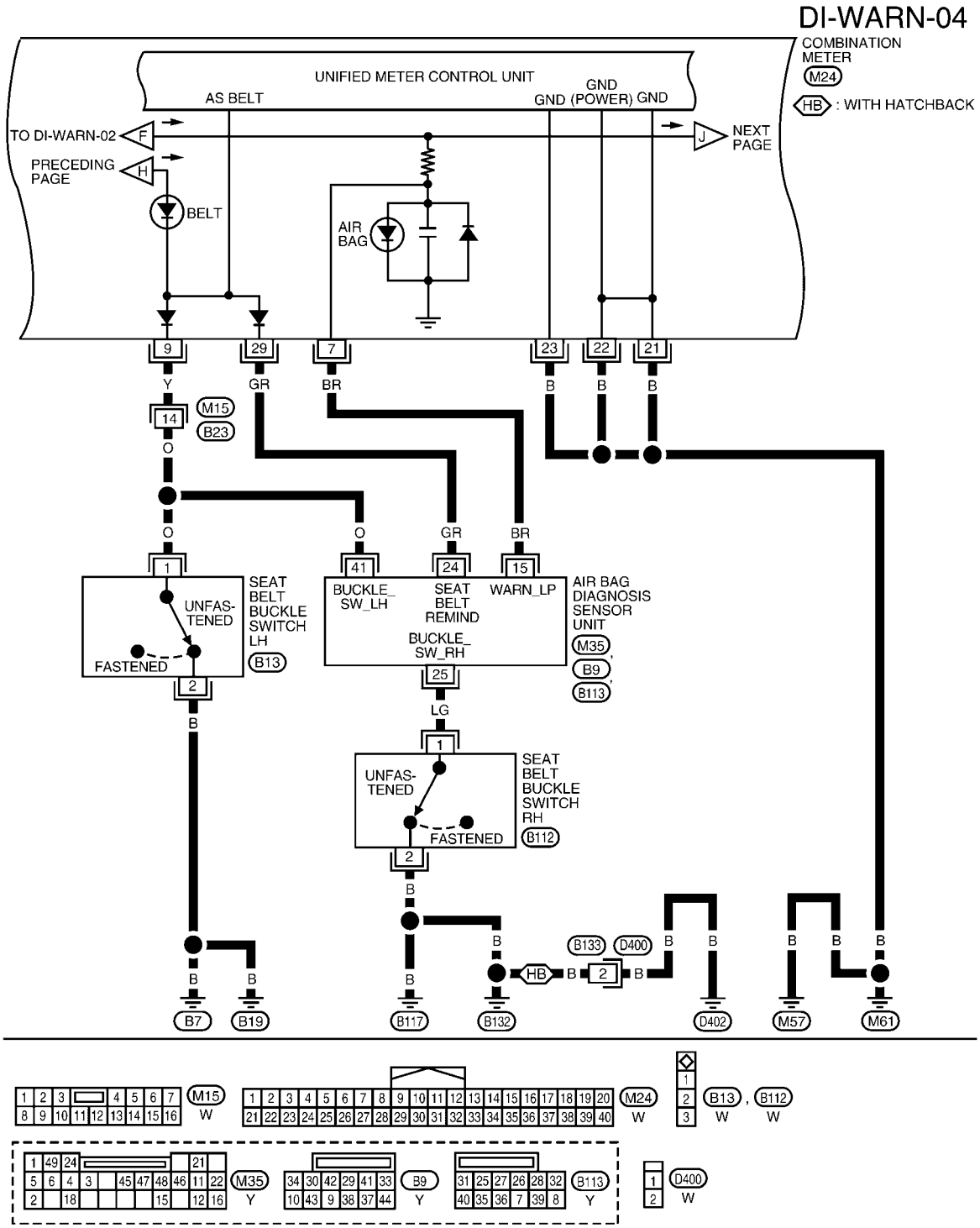
DI-WARN-04
COMBINATION METER
M24
HB : WITH HATCHBACK
UNIFIED METER CONTROL UNIT
AS BELT
GND
GND (POWER) GND
TO DI-WARN-02
F
J
NEXT PAGE
PRECEDING PAGE
H
BELT
AIR BAG
9
29
7
23
22
21
Y
GR
BR
B
B
B
14
M15
B23
O
O
O
GR
BR
1
41
24
15
SEAT BELT BUCKLE SWITCH LH
UNFAS-TENED
FASTENED
B13
BUCKLE_ SW_LH
SEAT BELT REMIND
WARN_LP
BUCKLE_ SW_RH
AIR BAG DIAGNOSIS SENSOR UNIT
M35
B9
B113
2
25
B
LG
1
SEAT BELT BUCKLE SWITCH RH
UNFAS-TENED
FASTENED
B112
2
B
B133
D400
HB
B7
B19
B117
B132
D402
M57
M61
M15
W
M24
W
B13
B112
W
W
M35
Y
B9
Y
B113
Y
D400
W
WKWA5804E

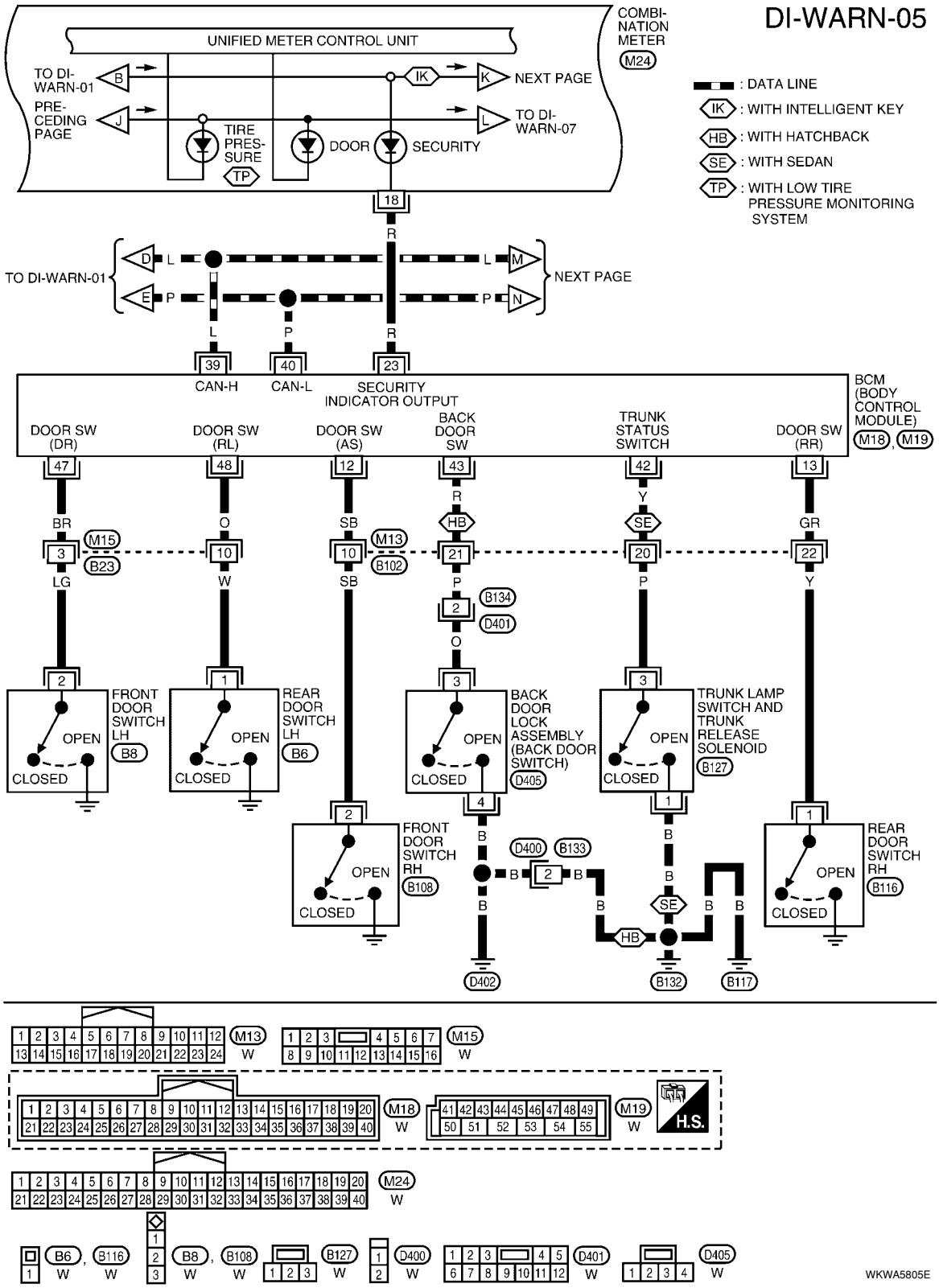
DI-WARN-05
UNIFIED METER CONTROL UNIT
COMBI-NATION METER
M24
TO DI-WARN-01
PRE-CEDING PAGE
NEXT PAGE
TO DI-WARN-07
TIRE PRES-SURE
TP
DOOR
SECURITY
: DATA LINE
: WITH INTELLIGENT KEY
: WITH HATCHBACK
: WITH SEDAN
: WITH LOW TIRE PRESSURE MONITORING SYSTEM
TO DI-WARN-01
NEXT PAGE
CAN-H
CAN-L
SECURITY INDICATOR OUTPUT
BCM (BODY CONTROL MODULE)
M18, M19
DOOR SW (DR)
DOOR SW (RL)
DOOR SW (AS)
BACK DOOR SW
TRUNK STATUS SWITCH
DOOR SW (RR)
FRONT DOOR SWITCH LH
B8
REAR DOOR SWITCH LH
B6
BACK DOOR LOCK ASSEMBLY (BACK DOOR SWITCH)
D405
TRUNK LAMP SWITCH AND TRUNK RELEASE SOLENOID
B127
FRONT DOOR SWITCH RH
B108
REAR DOOR SWITCH RH
B116
OPEN
CLOSED
D400
B133
D402
B132
B117
M13
M15
M18
M19
M24
H.S.
B6
B116
B8
B108
B127
D400
D401
D405
WKWA5805E

DI-WARN-06

: DATA LINE
IK : WITH INTELLIGENT KEY
M : WITH M/T
MB : WITHOUT M/T
*1 M : LOCK
MB : P-SHIFT

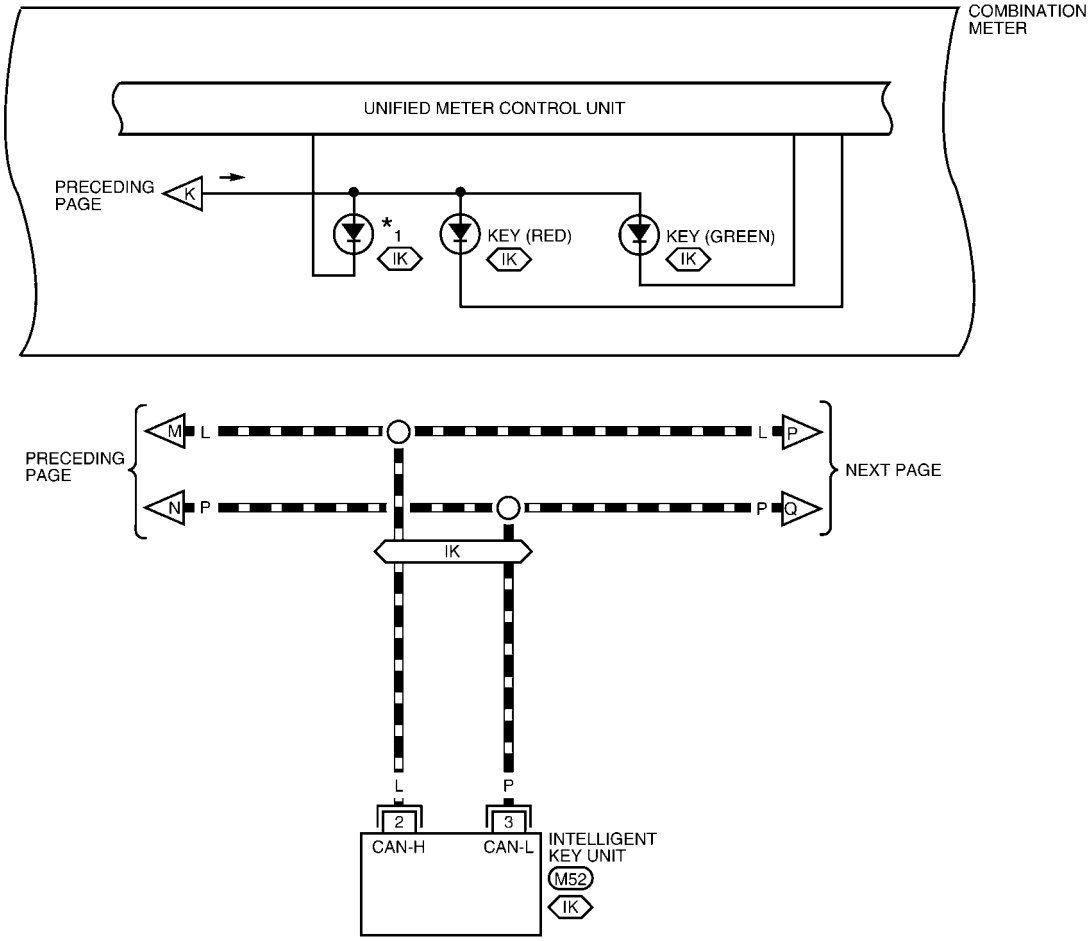

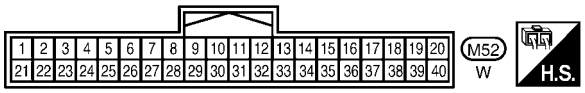

LKWA0356E

DI-WARN-07

: DATA LINE

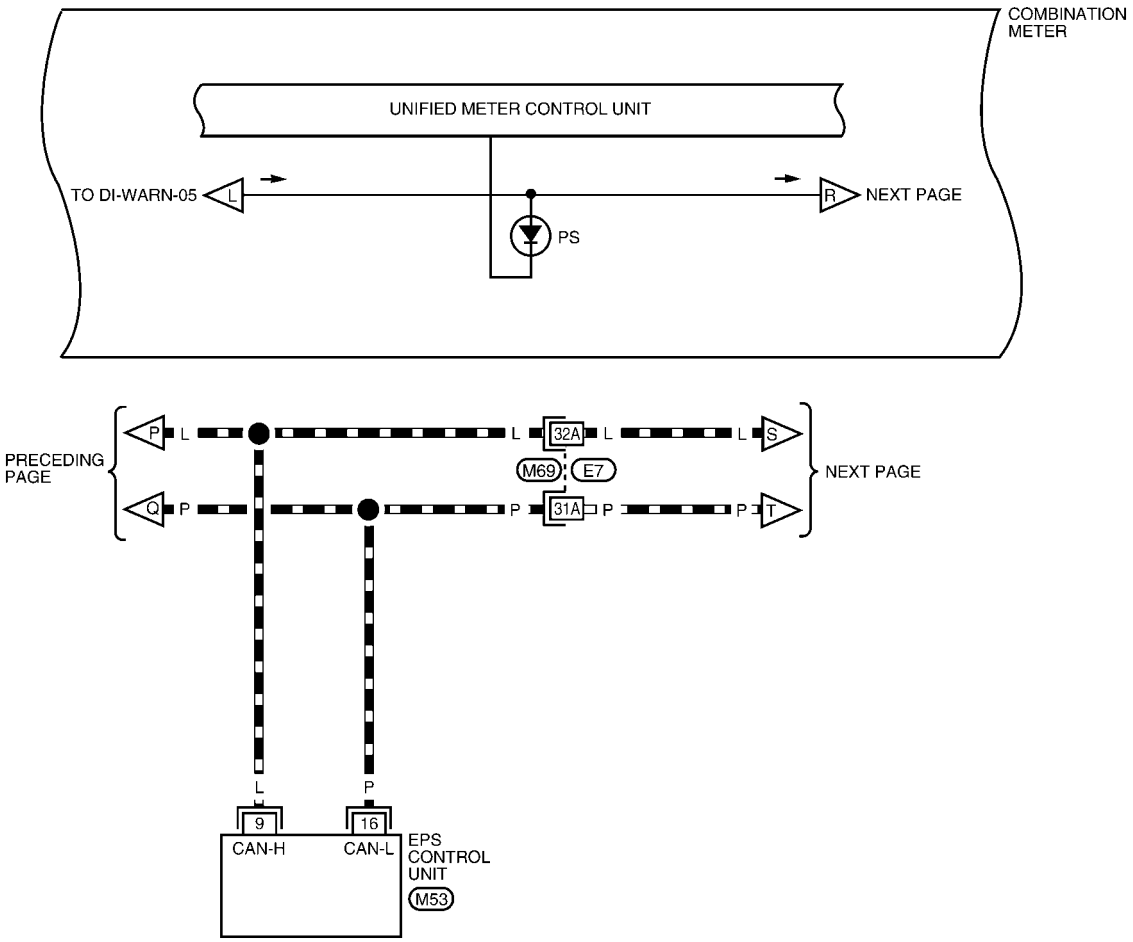

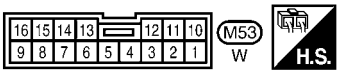

REFER TO THE FOLLOWING.
M69 - SUPER MULTIPLE JUNCTION (SMJ)

LKWA0357E

DI-WARN-08

: DATA LINE
MB : WITHOUT M/T

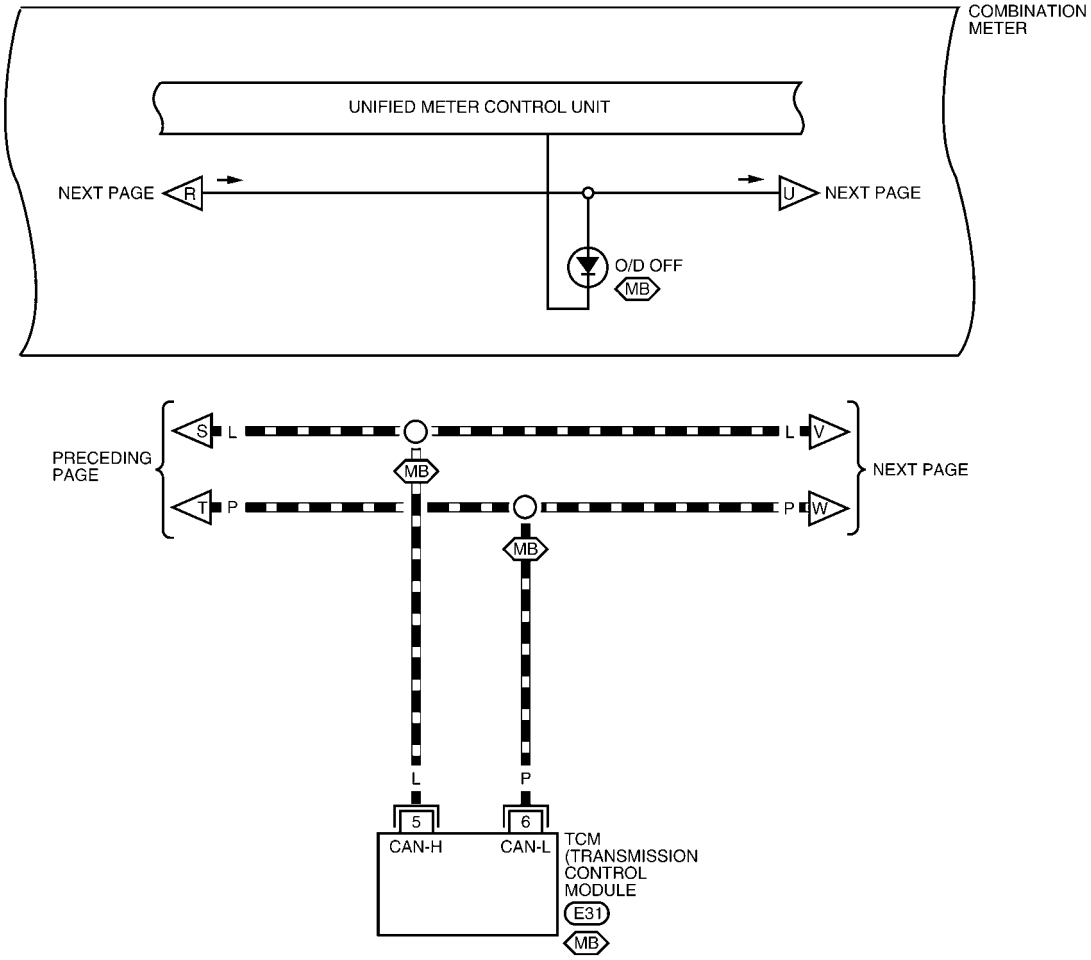

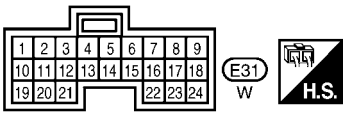

LKWA0358E

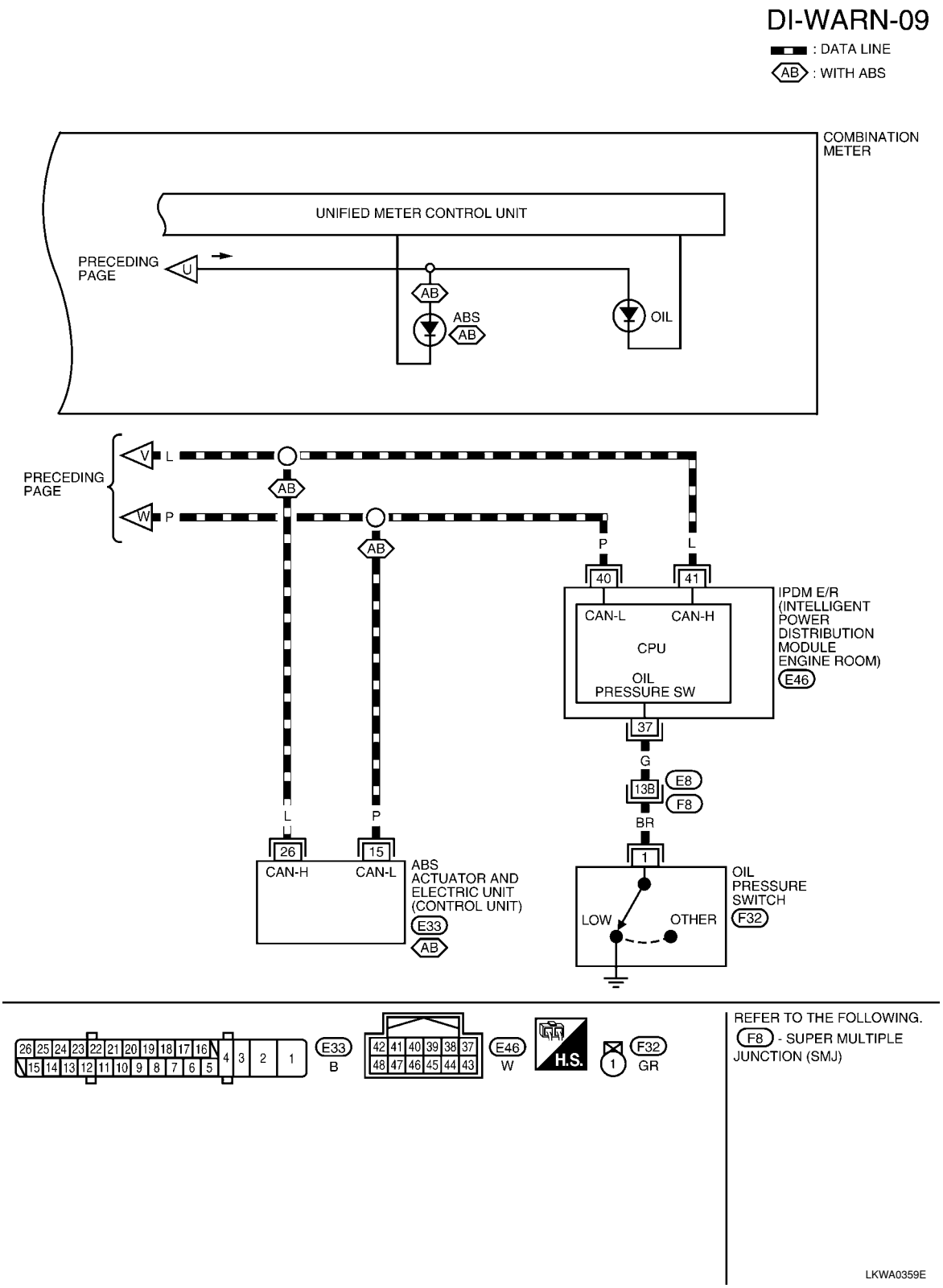

Oil Pressure Warning Lamp Stays Off (Ignition Switch ON)

INFOID:0000000001704512

1. CHECK OIL PRESSURE WARNING LAMP OPERATION

Activate IPDM E/R auto active test. Refer to PG-19, "Auto Active Test".

Does oil pressure warning lamp blink?

YES >> GO TO 2.
NO >> GO TO 5.

2. CHECK IPDM E/R INPUT SIGNAL

1. Turn ignition switch ON.
2. Check voltage between IPDM E/R harness connector and ground.

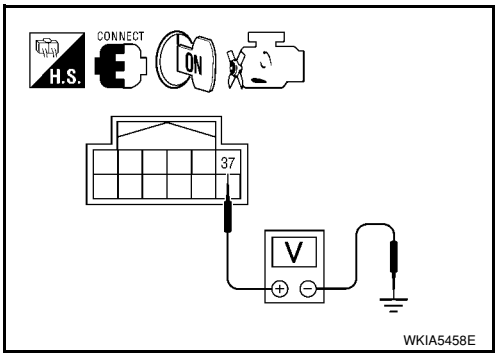

Terminals			Condition	Voltage (Approx.)
(+)		(–)		
IPDM E/R connector	Terminal			
E46	37	Ground	Engine stopped	0 V

OK or NG

OK >> Replace IPDM E/R. Refer to PG-26, "Removal and Installation of IPDM E/R".

NG >> GO TO 3.

3. CHECK OIL PRESSURE SWITCH

1. Turn ignition switch OFF.
2. Disconnect oil pressure switch connector.
3. Check oil pressure switch. Refer to DI-32, "Component Inspection".

OK or NG

OK >> GO TO 4.

NG >> Replace oil pressure switch.

4. CHECK OIL PRESSURE SWITCH CIRCUIT

1. Disconnect IPDM E/R connector.
2. Check continuity between IPDM E/R harness connector (A) and oil pressure switch harness connector (B).

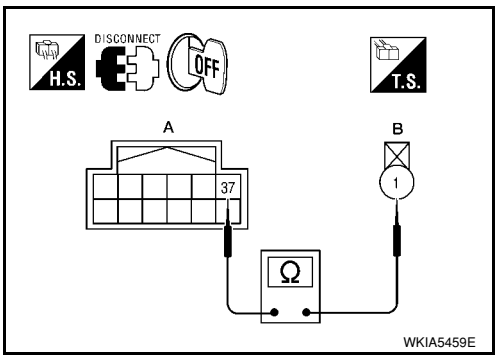

A		B		Continuity
Connector	Terminal	Connector	Terminal	
E46	37	F32	1	Yes

OK or NG

OK >> Replace IPDM E/R. Refer to PG-26, "Removal and Installation of IPDM E/R".

NG >> Repair harness or connector.

5. CHECK CAN COMMUNICATION

Select “METER/M&A” on CONSULT-III, and perform self-diagnosis of combination meter.

Self-diagnostic results content

No malfunction detected>>GO TO 6.

Malfunction detected>> Check applicable parts, and repair or replace as necessary.

6. CHECK COMBINATION METER INPUT SIGNAL

Select “METER/M&A” on CONSULT-III. Operate ignition switch with “OIL W/L” of “DATA MONITOR” and check operation status.

“OIL W/L”

When ignition switch is in ON position (Engine stopped.) : ON

When engine running : OFF

OK or NG

OK >> Replace combination meter. Refer to IP-11, "Removal and Installation".

NG >> Replace IPDM E/R. Refer to PG-26, "Removal and Installation of IPDM E/R".

Oil Pressure Warning Lamp Does Not Turn Off (Oil Pressure Is Normal)

INFOID:0000000001704513

NOTE:
For oil pressure inspection, refer to LU-6, "Inspection".

1. CHECK OIL PRESSURE WARNING LAMP OPERATION

Activate IPDM E/R auto active test. Refer to PG-19, "Auto Active Test".

Does oil pressure warning lamp blink?

YES >> GO TO 2.
NO >> GO TO 5.

2. CHECK IPDM E/R OUTPUT SIGNAL

1. Turn ignition switch OFF.
2. Disconnect oil pressure switch connector.
3. Turn ignition switch ON.
4. Check voltage between oil pressure switch harness connector and ground.

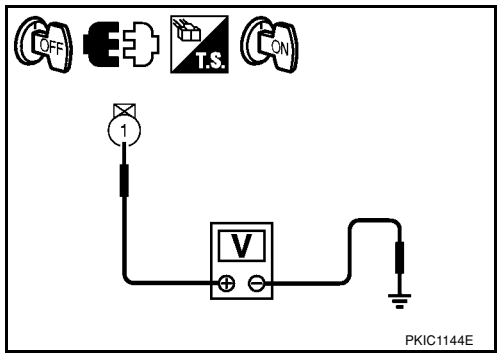

Terminals			Voltage (Approx.)
(+)		(–)	
Oil pressure switch connector	Terminal		
F32	1	Ground	12 V

OK or NG

OK >> GO TO 3.
NG >> GO TO 4.

3. CHECK OIL PRESSURE SWITCH

1. Turn ignition switch OFF.
2. Check oil pressure switch. Refer to DI-32, "Component Inspection".

OK or NG

OK >> Replace IPDM E/R. Refer to PG-26, "Removal and Installation of IPDM E/R".
NG >> Replace oil pressure switch.

4. CHECK OIL PRESSURE SWITCH CIRCUIT

1. Turn ignition switch OFF.
2. Disconnect IPDM E/R connector.
3. Check continuity between IPDM E/R harness connector and ground.

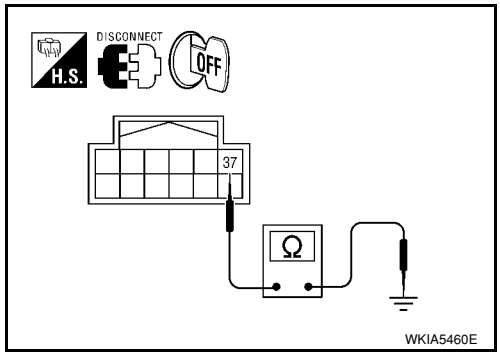

IPDM E/R connector	Terminal	Ground	Continuity
E46	37		No

OK or NG

OK >> Replace IPDM E/R. Refer to PG-26, "Removal and Installation of IPDM E/R".
NG >> Repair harness or connector.

5. CHECK IPDM E/R (CONSULT-III)

Perform self-diagnosis of IPDM E/R. Refer to PG-17, "CONSULT-III Function (IPDM E/R)".

Self-diagnostic results content

No malfunction detected>>Replace combination meter. Refer to IP-11, "Removal and Installation".
Malfunction detected>> Check applicable parts, and repair or replace as necessary.

Component Inspection

INFOID:0000000001704514

OIL PRESSURE SWITCH

Check continuity between oil pressure switch and ground.

Condition	Oil pressure [kPa (bar, kg/cm^2, psi)]	Continuity
Engine stopped	Less than 29 (0.3, 0.3, 4)	Yes
Engine running	More than 29 (0.3, 0.3, 4)	No

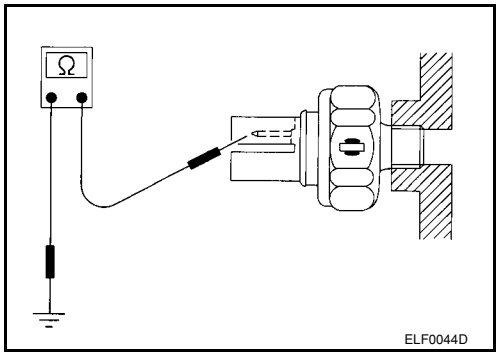

A/T INDICATOR

System Description

INFOID:0000000001704515

The TCM receives A/T indicator signals from the park/neutral position (PNP) switch (R-range, D-range, 2-range and 1-range) and the combination meter (P-range and N-range). The TCM then sends A/T position indicator signals to the combination meter via CAN communication lines. The combination meter indicates the received shift position.

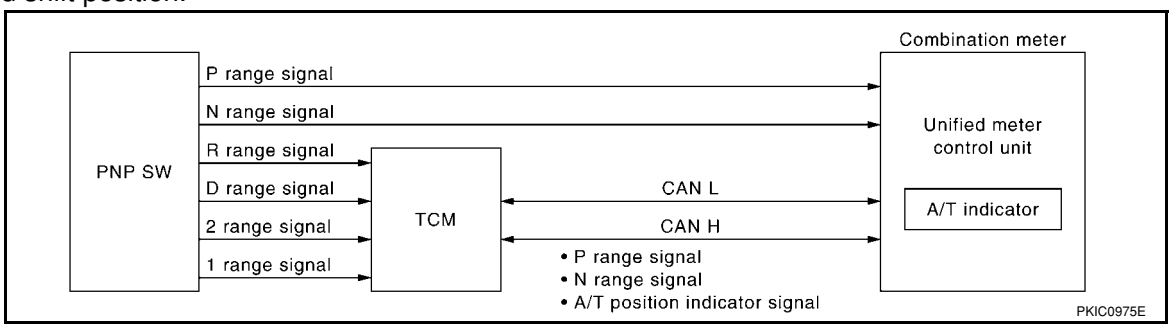

Wiring Diagram - AT/IND -

INFOID:0000000001704516

DI-AT/IND-01

: DATA LINE

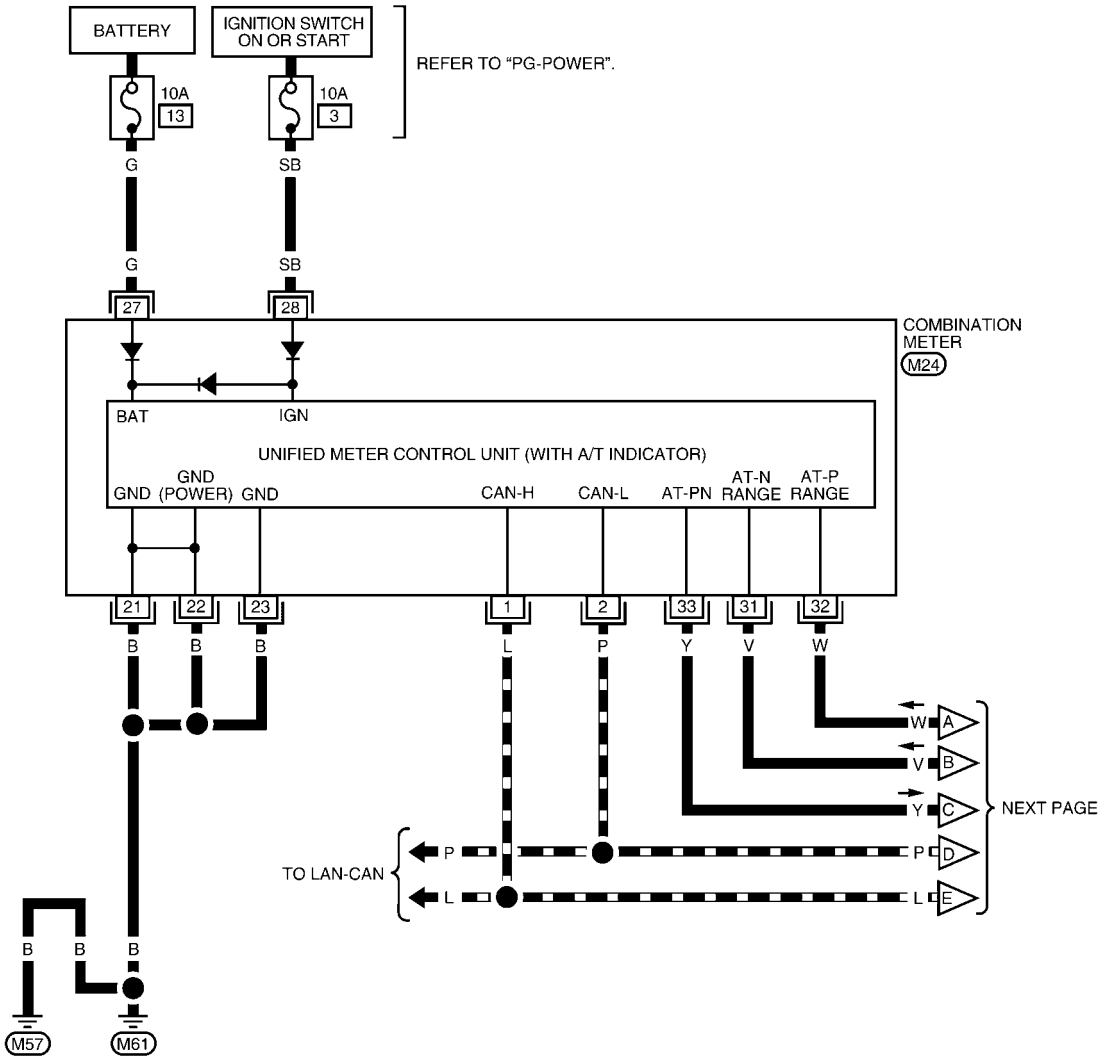

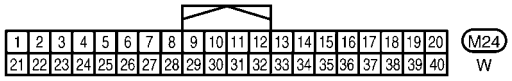

LKWA0360E

DI-AT/IND-02

: DATA LINE

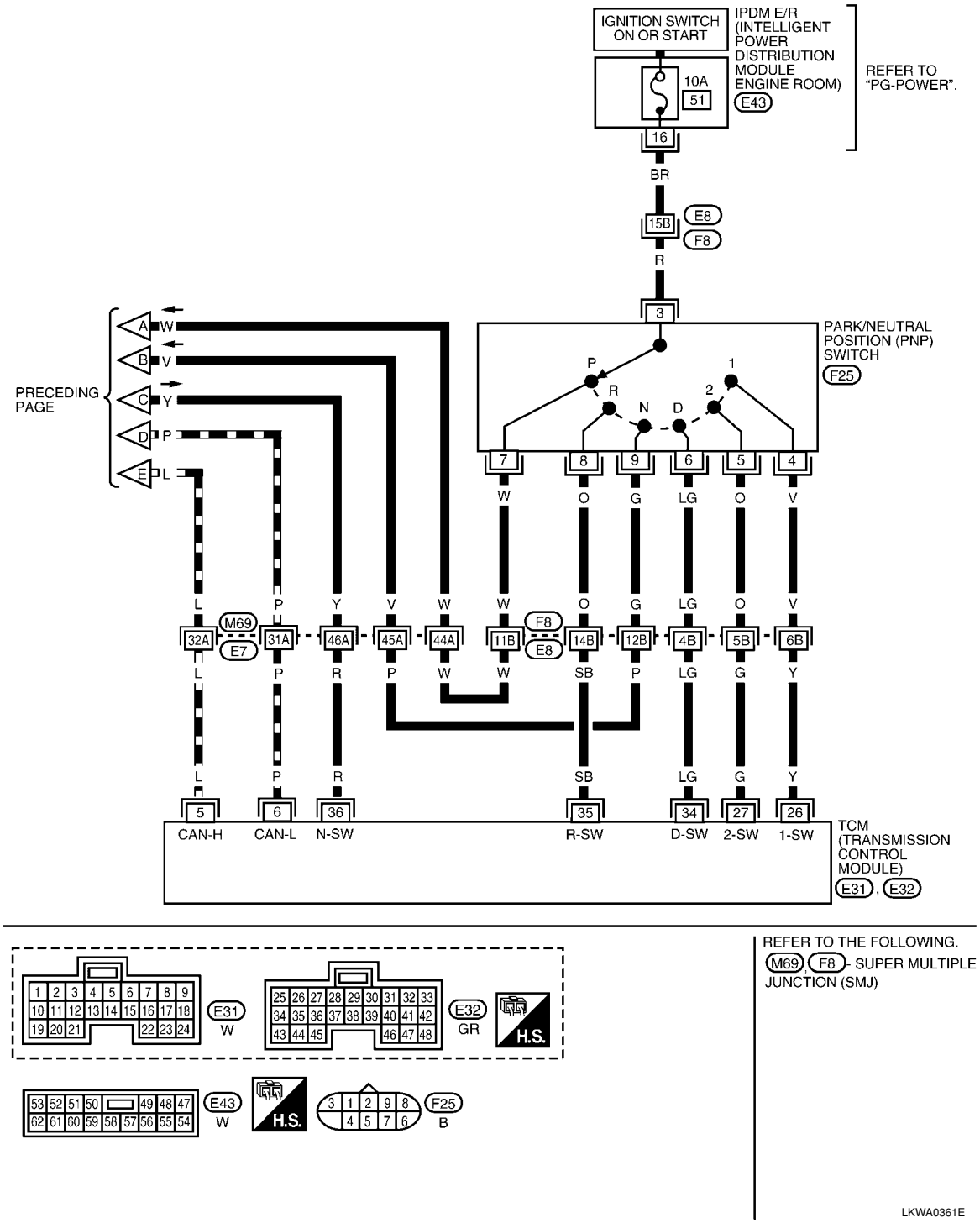

A/T Indicator Does Not Illuminate

INFOID:0000000001704517

1. CHECK SEGMENT OF A/T INDICATOR

Perform self-diagnosis of combination meter. Refer to DI-11, "Self-Diagnosis Mode of Combination Meter".

Are all segments displayed?

YES >> GO TO 2.
NO >> Replace combination meter. Refer to IP-11, "Removal and Installation".

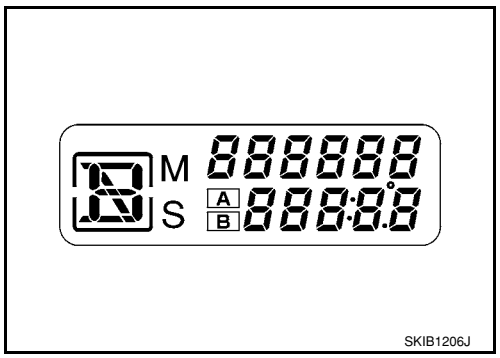

2. CHECK COMBINATION METER (CONSULT-III)

1. Connect CONSULT-III.
2. Select “METER/M&A” on CONSULT-III, and perform self-diagnosis of combination meter. Refer to DI-13, "CONSULT-III Function (METER/M&A)".

Self-diagnostic results content

No malfunction detected>>GO TO 3.
Malfunction detected>> Check applicable parts, and repair or replace as necessary.

3. CHECK COMBINATION METER INPUT SIGNAL

Use “DATA MONITOR” of “METER/M&A” on CONSULT-III. Confirm each indication on the monitor when operating the A/T selector lever.

CONSULT-III display	Switch operation	Operation status
P RANGE IND	P range position	ON
	Except for P range position	OFF
R RANGE IND	R range position	ON
	Except for R range position	OFF
N RANGE IND	N range position	ON
	Except for N range position	OFF
D RANGE IND	D range position	ON
	Except for D range position	OFF
2 RANGE IND	2 range position	ON
	Except for 2 range position	OFF
1 RANGE IND	1 range position	ON
	Except for 1 range position	OFF

OK or NG

OK >> Replace combination meter. Refer to IP-11, "Removal and Installation".
NG >> GO TO 4.

4. CHECK SELF-DIAGNOSIS RESULTS OF TCM

Perform self-diagnosis of TCM. Refer to AT-73, "CONSULT-III Function (A/T)".

OK or NG

OK >> Check TCM input/output signal. Repair or replace malfunctioning part, if necessary. Refer to AT-28, "Input/Output Signal of TCM".
NG >> Check applicable part, and repair or replace as necessary.

CVT INDICATOR

System Description

INFOID:0000000001704518

The TCM receives CVT indicator signals from the CVT unit. The TCM then sends CVT position indicator signals to the combination meter via CAN communication lines. The combination meter indicates the received shift position.

Wiring Diagram - CVTIND -

INFOID:0000000001704519

DI-CVTIND-01

: DATA LINE

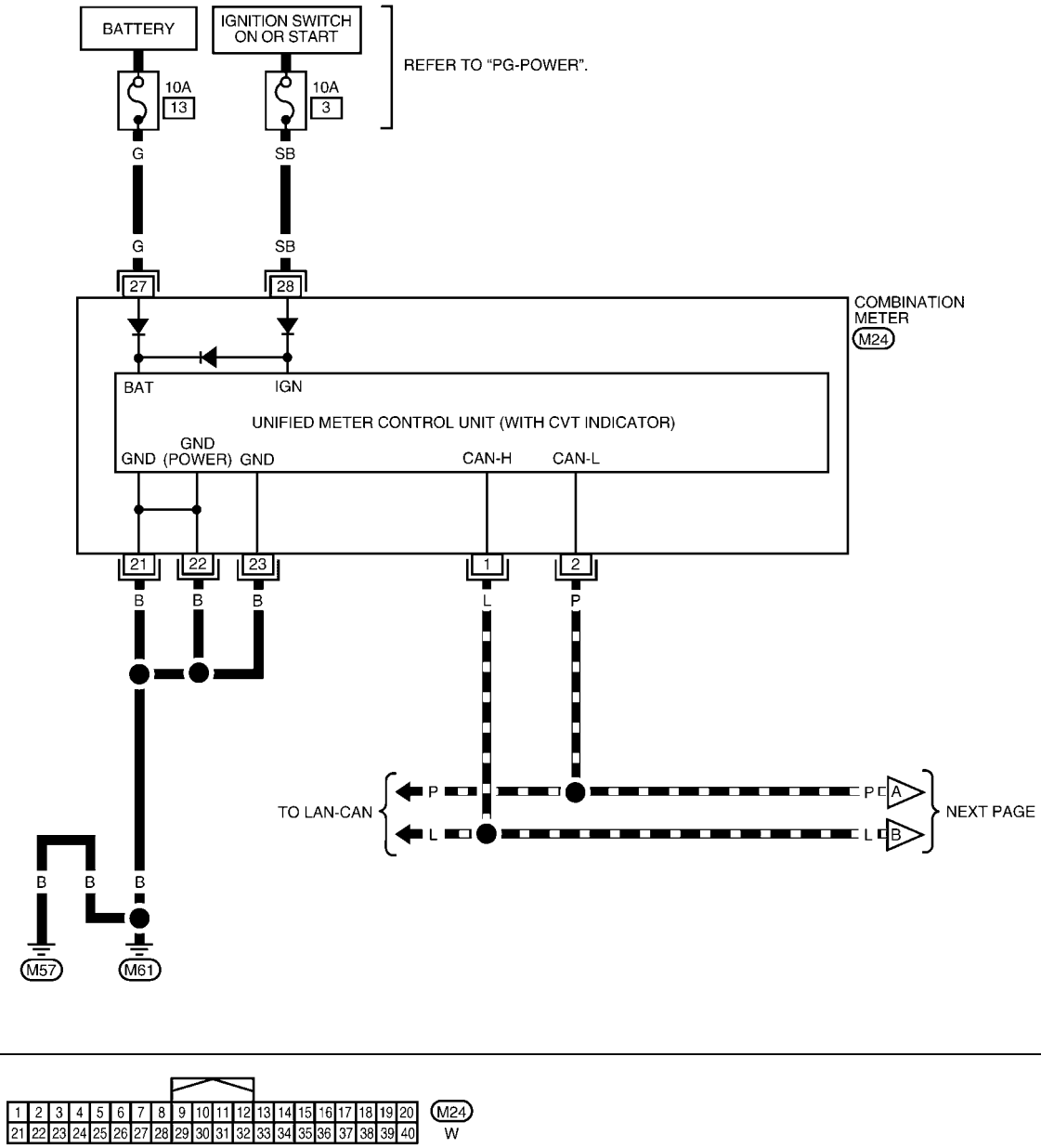

LKWA0362E

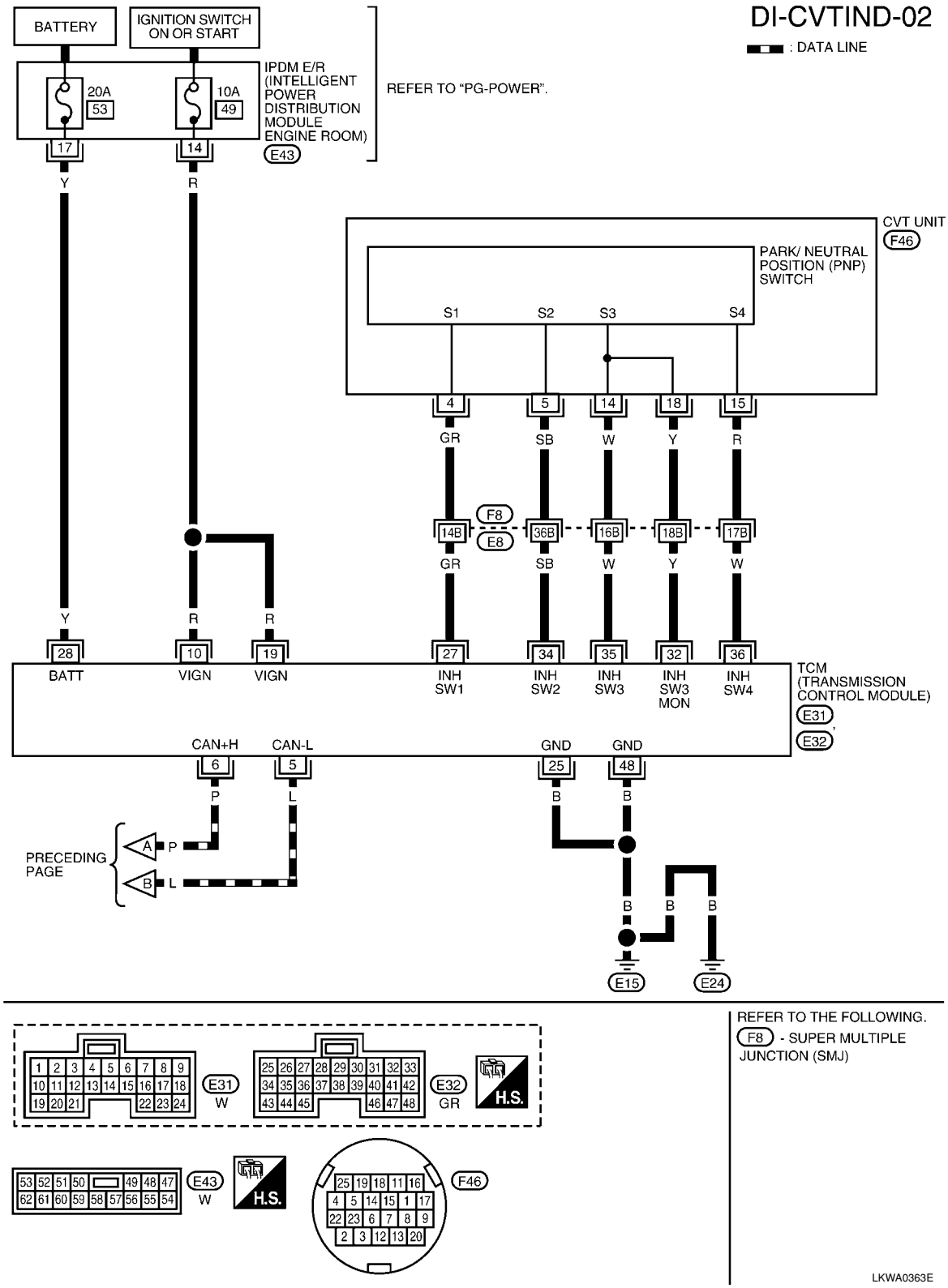

CVT Indicator Does Not Illuminate

INFOID:0000000001704520

1. CHECK SEGMENT OF CVT INDICATOR

Perform self-diagnosis of combination meter. Refer to DI-11, "Self-Diagnosis Mode of Combination Meter".

Are all segments displayed?

YES >> GO TO 2.
NO >> Replace combination meter. Refer to IP-11, "Removal and Installation".

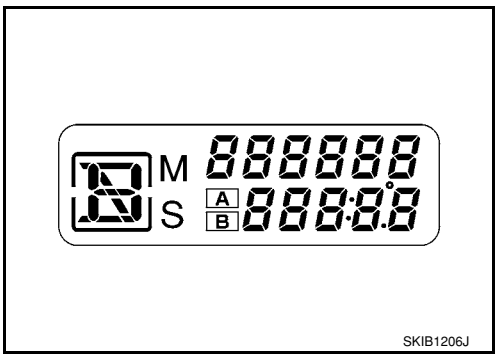

2. CHECK COMBINATION METER (CONSULT-III)

1. Connect CONSULT-III.
2. Select “METER/M&A” on CONSULT-III, and perform self-diagnosis of combination meter. Refer to DI-13, "CONSULT-III Function (METER/M&A)".

Self-diagnostic results content

No malfunction detected>>GO TO 3.
Malfunction detected>> Check applicable parts, and repair or replace as necessary.

3. CHECK COMBINATION METER INPUT SIGNAL

Use “DATA MONITOR” of “METER/M&A” on CONSULT-III. Confirm each indication on the monitor when operating the CVT selector lever.

CONSULT-III display	Switch operation	Operation status
P RANGE IND	P range position	ON
	Except for P range position	OFF
R RANGE IND	R range position	ON
	Except for R range position	OFF
N RANGE IND	N range position	ON
	Except for N range position	OFF
D RANGE IND	D range position	ON
	Except for D range position	OFF
L RANGE IND	L range position	ON
	Except for L range position	OFF

OK or NG

OK >> Replace combination meter. Refer to IP-11, "Removal and Installation".
NG >> GO TO 4.

4. CHECK SELF-DIAGNOSIS RESULTS OF TCM

Perform self-diagnosis of TCM. Refer to CVT-47, "CONSULT-III Function (TRANSMISSION)".

OK or NG

OK >> Check TCM input/output signal. Repair or replace malfunctioning part, if necessary. Refer to CVT-22, "Input/Output Signal of TCM".
NG >> Check applicable part, and repair or replace as necessary.

WARNING CHIME

Component Parts and Harness Connector Location

INFOID:0000000001704521

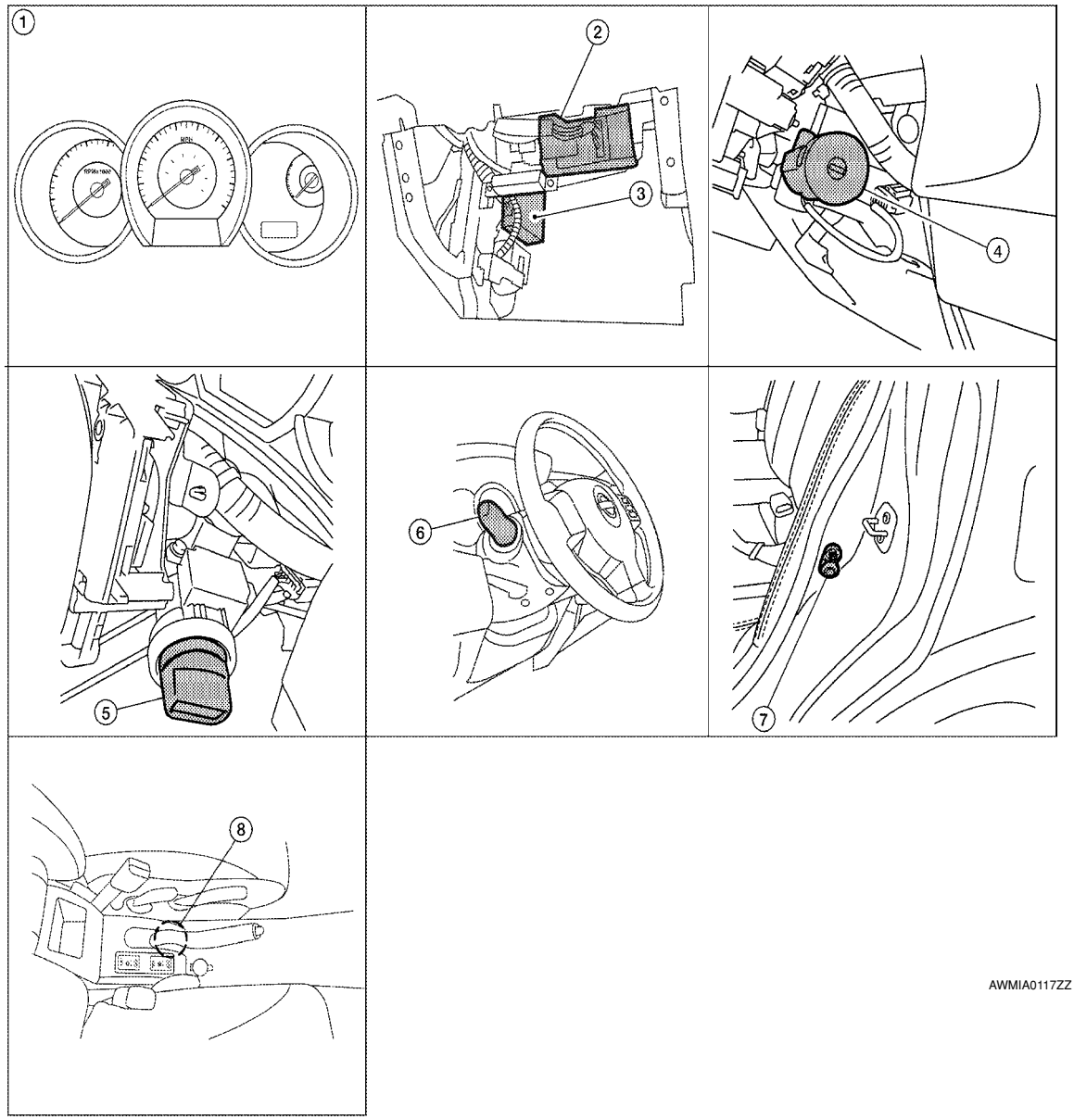

1. Combination meter M24
2. BCM M18, M19, M20 (view with glove box removed)
3. Intelligent Key unit M52 (with Intelligent Key)
4. Key switch and key lock solenoid M27 (without Intelligent Key)
5. Key switch and ignition knob switch M73 (with Intelligent Key)
6. Combination switch (lighting switch) M28
7. Front door switch LH B8
8. Parking brake switch M17

System Description

INFOID:0000000001704522

- Buzzer for warning chime system is installed in the combination meter.
- The buzzer sounds when combination meter receives buzzer output signal with CAN communication line.

POWER SUPPLY AND GROUND CIRCUIT

Power is supplied at all times
- through 40A fusible link (letter **g**, located in the fuse and fusible link box)
- to BCM terminal 70,

- through 10A fuse [No. 8, located in the fuse block (J/B)]
- to BCM terminal 57,
- through 10A fuse [No. 13, located in the fuse block (J/B)]
- to combination meter terminal 27.

With ignition switch in the ON or START position, power is supplied
- through 10A fuse [No. 6, located in the fuse block (J/B)]
- to BCM terminal 38,
- through 10A fuse [No. 3, located in the fuse block (J/B)]
- to combination meter terminal 28.

Ground is supplied
- to BCM terminal 67 and
- to combination meter terminals 21, 22 and 23
- through grounds M57 and M61.

IGNITION KEY WARNING CHIME (WITHOUT INTELLIGENT KEY)

With the key inserted into the key switch, and the ignition switch in the OFF or ACC position, when driver's door is opened, the warning chime will sound.
- BCM detects key inserted into the ignition switch, and sends key warning signal to combination meter with CAN communication line.
- When combination meter receives key warning signal, it sounds warning chime.

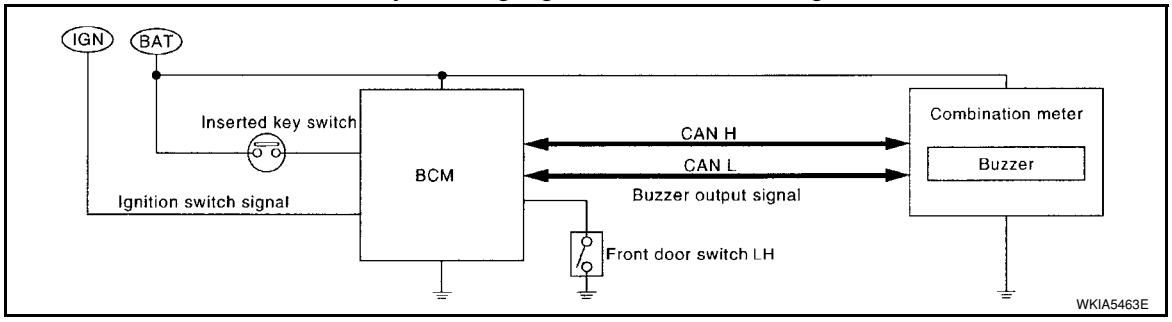

IGNITION KEY WARNING CHIME (WITH INTELLIGENT KEY)

When Mechanical Key Is Used

With the key inserted into the key switch, and the ignition switch in the LOCK or ACC position, when driver's door is opened, the warning chime will sound.
- BCM detects key inserted into the ignition switch, and sends key warning signal to combination meter with CAN communication line.
- When combination meter receives key warning signal, it sounds warning chime.

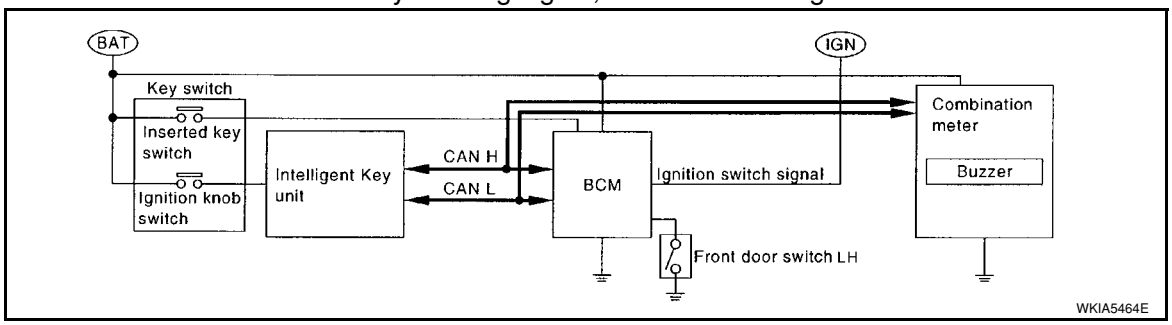

When Intelligent Key Is Carried With The Driver

Refer to BL-76, "System Description".

LIGHT WARNING CHIME

The warning chime sounds, when driver's door is opened (door switch ON) with lighting switch ON and the ignition switch is in any position other than ON or START.

NOTE:

BCM detected lighting switch in the 1st or 2nd position, refer to LT-62, "Combination Switch Reading Function".
- BCM detects headlamps are illuminated, and sends light warning signal to combination meter with CAN communication lines.

- When the combination meter receives light warning signal, it sounds warning chime.

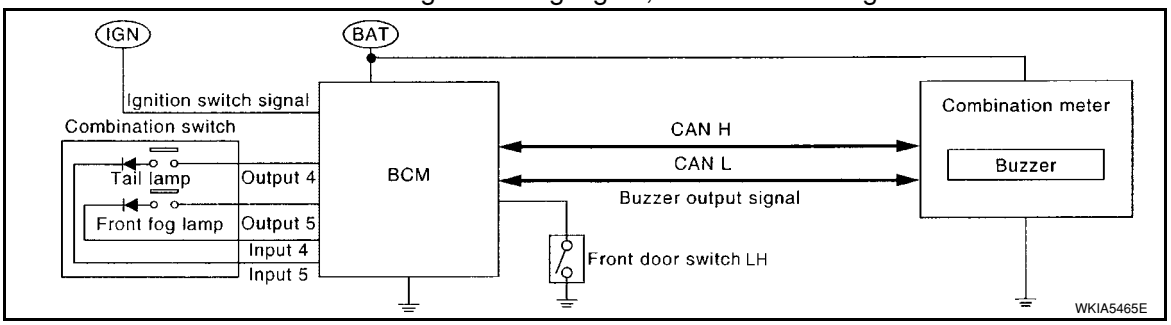

PARKING BRAKE WARNING CHIME

The parking brake warning chime sounds when the parking brake is applied and vehicle speed reaches approximately 2 km/h (1 MPH).

- The combination meter receives a parking brake applied signal from the parking brake switch.
- When the combination meter receives a vehicle speed signal from the ABS actuator and electric unit (control unit) (with ABS), vehicle speed sensor (without ABS or CVT) or the TCM (with CVT, without ABS), it sounds the buzzer.

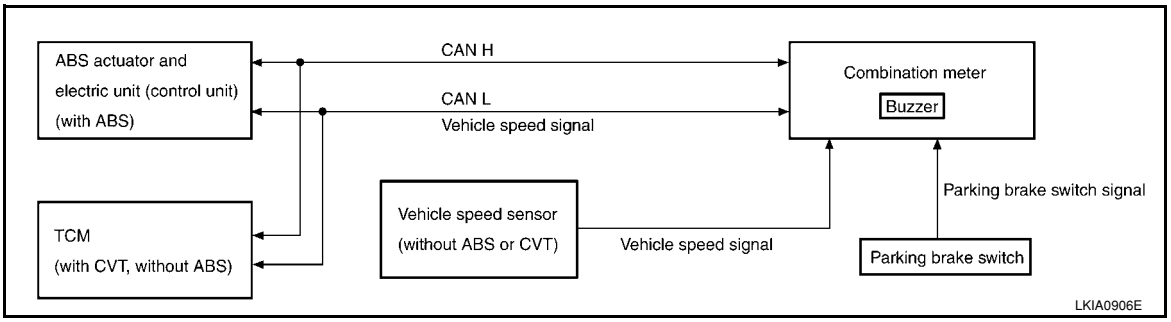

Wiring Diagram - CHIME -

INFOID:0000000001704523

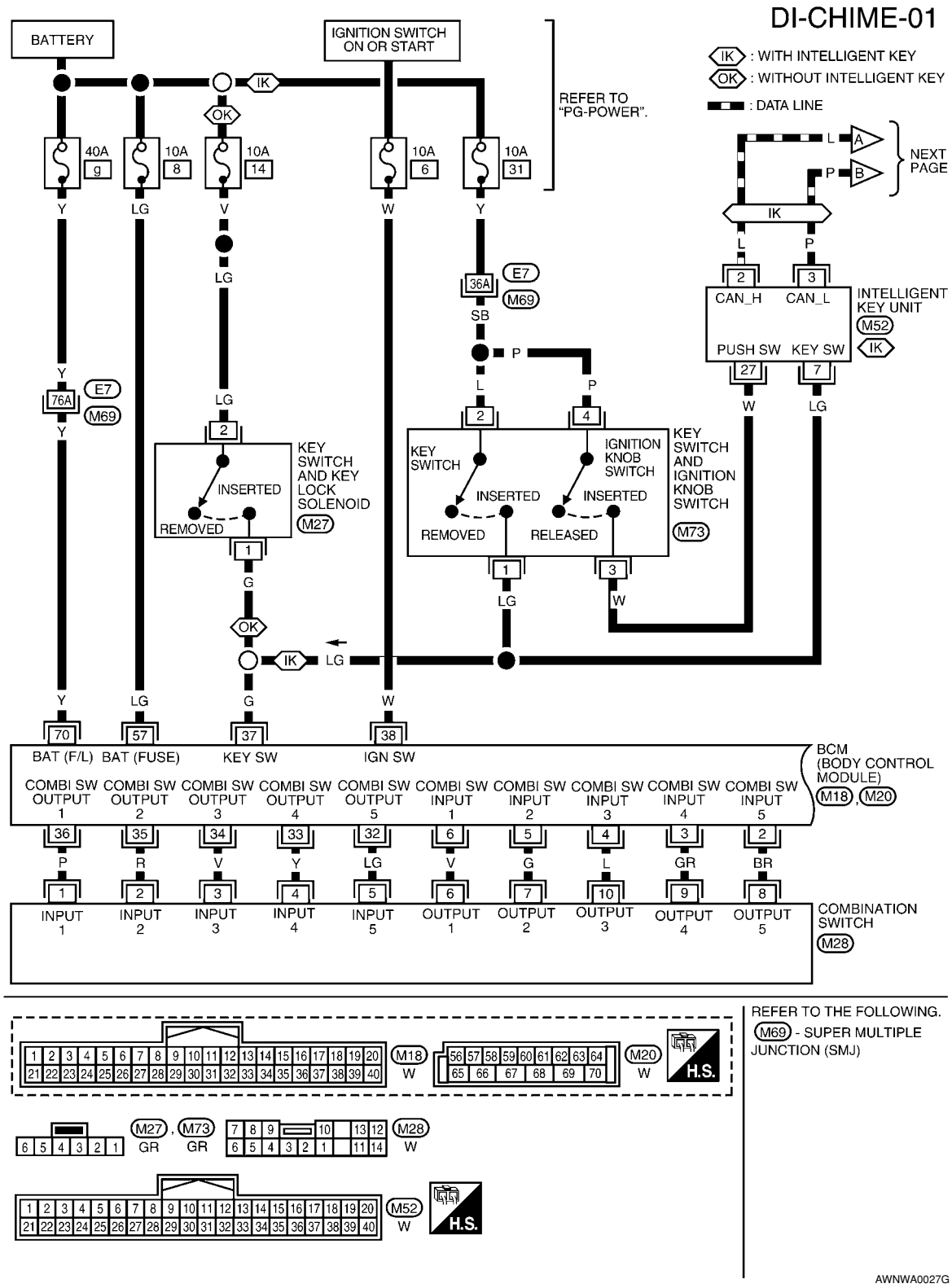

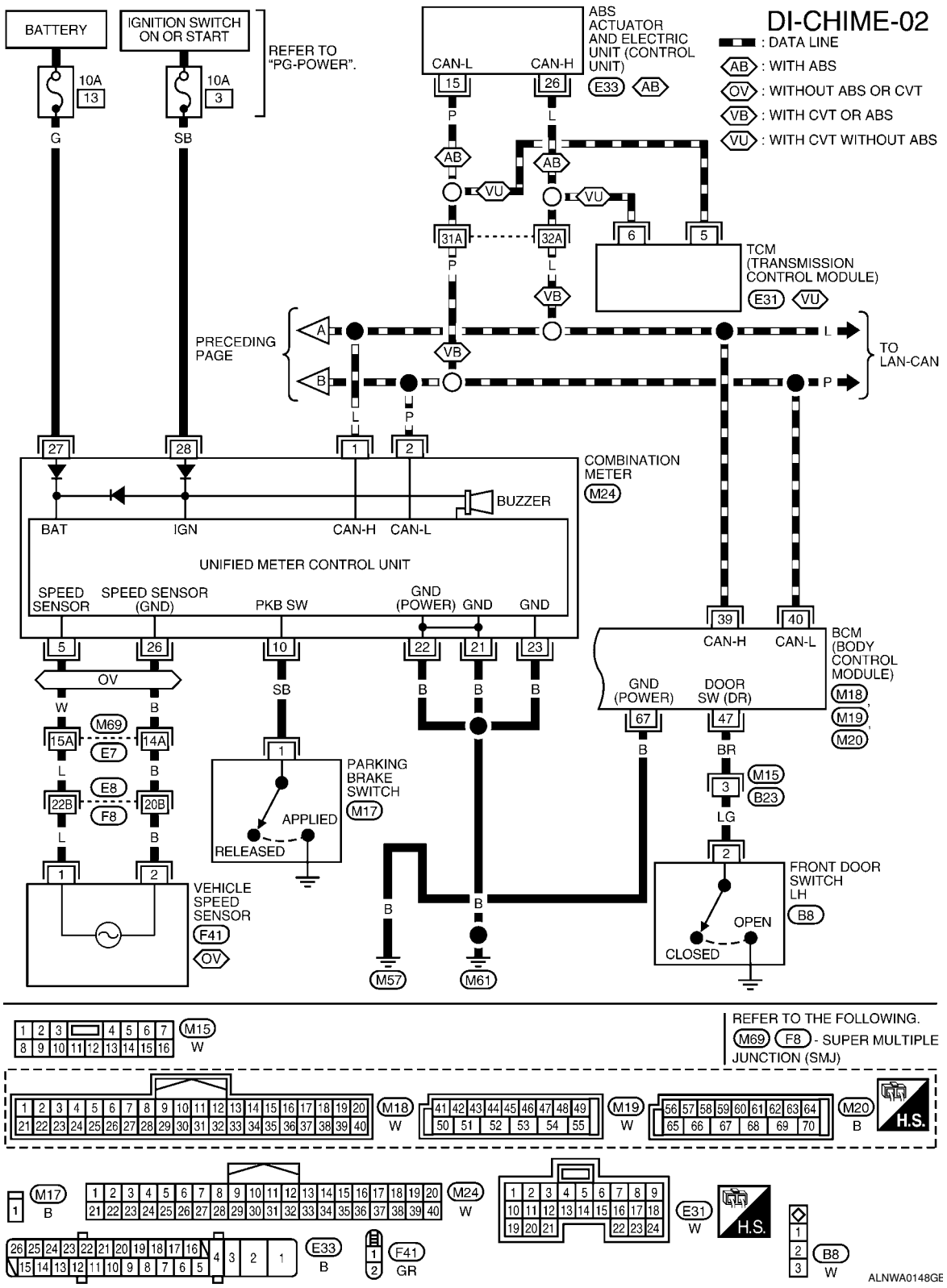

Terminal and Reference Value for BCM

INFOID:0000000001704524

Refer to BCS-11, "Terminal and Reference Value for BCM".

CONSULT-III Function (BCM)

INFOID:0000000001704525

CONSULT-III can display each diagnostic item using the diagnostic test modes shown following.

BCM diagnostic test item	Diagnostic mode	Description
Inspection by part	WORK SUPPORT	Supports inspections and adjustments. Commands are transmitted to the BCM for setting the status suitable for required operation, input/output signals are received from the BCM and received data is displayed.
	DATA MONITOR	Displays BCM input/output data in real time.
	ACTIVE TEST	Operation of electrical loads can be checked by sending drive signal to them.
	SELF-DIAG RESULTS	Displays BCM self-diagnosis results.
	CAN DIAG SUPPORT MNTR	The result of transmit/receive diagnosis of CAN communication can be read.
	ECU PART NUMBER	BCM part number can be read.
	CONFIGURATION	Performs BCM configuration read/write functions.

DATA MONITOR

Display Item List

Monitored item	ALL SIGNALS	SELECTION FROM MENU	Contents
IGN ON SW	X	X	Indicates [ON/OFF] condition of ignition switch.
KEY ON SW	X	X	Indicates [ON/OFF] condition of key switch.
DOOR SW-DR	X	X	Indicates [ON/OFF] condition of front door switch LH.
LIGHT SW 1ST	X	X	Indicates [ON/OFF] condition of lighting switch.
BUCKLE SW	X	X	Indicates [ON/OFF] condition of seat belt buckle switch LH.

ACTIVE TEST

Display Item List

Test item	Malfunction is detected when···
IGN KEY WARN ALM	This test is able to check key warning chime operation.
LIGHT WARN ALM	This test is able to check light warning chime operation.
SEAT BELT WARN TEST	This test is able to check seat belt warning chime operation.

SELF-DIAG RESULTS

Display Item List

Display item [Code]	Malfunction is detected when...
CAN communication [U1000]	Malfunction is detected in CAN communication.

NOTE:
If “CAN communication [U1000]” is indicated, after printing the monitor item, go to “LAN system”. Refer to LAN-15, "Trouble Diagnosis Flow Chart".

Trouble Diagnosis

INFOID:0000000001704526

HOW TO PERFORM TROUBLE DIAGNOSIS

1. Confirm the symptom and customer complaint.
2. Understand the outline of system. Refer to DI-41, "System Description".
3. Perform the preliminary inspection. Refer to "PRELIMINARY INSPECTION".
4. According to symptom chart, repair or replace the cause of the malfunction. Refer to "SYMPTOM CHART".
5. Does warning chime system operate normally? If it operates normally, GO TO 6. If not, GO TO 4.
6. Inspection End.

PRELIMINARY INSPECTION

1. CHECK BCM

Perform self-diagnosis of BCM. Refer to DI-45, "CONSULT-III Function (BCM)".

Self-diagnostic results content

No malfunction detected>>GO TO 2.
Malfunction detected>> Check applicable parts, and repair or replace corresponding parts.

2. CHECK COMBINATION METER

Perform self-diagnosis of combination meter. Refer to DI-13, "CONSULT-III Function (METER/M&A)".

Self-diagnostic results content

No malfunction detected>> Inspection End.
Malfunction detected>> Check applicable parts, and repair or replace corresponding parts.

SYMPTOM CHART

Symptom		Diagnoses/Service procedure
All warning chime systems do not activate.		Perform the following inspections. • DI-47, "Combination Meter Buzzer Circuit Inspection" • DI-48, "Front Door Switch LH Signal Inspection" If above check is OK, replace BCM. Refer to BCS-18, "Removal and Installation of BCM".
Key warning chime does not activate.	Without Intelligent Key.	Perform DI-49, "Key Switch Signal Inspection (Without Intelligent Key)". If above check is OK, replace BCM. Refer to BCS-18, "Removal and Installation of BCM".
	With Intelligent Key, when mechanical key is used.	Perform DI-50, "Key Switch and Ignition Knob Switch Signal Inspection (With Intelligent Key, When Mechanical Key Is Used)". If above check is OK, replace BCM. Refer to BCS-18, "Removal and Installation of BCM".
	With Intelligent Key, when Intelligent Key is carried with the driver.	Refer to BL-103, "Trouble Diagnosis Symptom Chart".
Light warning chime does not activate.		Perform DI-52, "Lighting Switch Signal Inspection". If above check is OK, replace BCM. Refer to BCS-18, "Removal and Installation of BCM".
Parking brake warning chime does not activate		Perform the following inspections • DI-52, "Parking Brake Switch Signal Inspection" • XX-XX, "*****"

Combination Meter Buzzer Circuit Inspection

INFOID:0000000001704527

1. CHECK CHIME OPERATION

1. Select “BUZZER” of “BCM” on CONSULT-III.
2. Perform “LIGHT WARN ALM” or “IGN KEY WARN ALM” of “ACTIVE TEST”.

Does chime sound?

YES >> Combination meter buzzer circuit is OK. Return to DI-46, "Trouble Diagnosis".
NO >> GO TO 2.

2. CHECK COMBINATION METER INPUT SIGNAL

1. Select “METER/M&A” on CONSULT-III.
2. Turn on hazard switch or lighting switch while monitoring “BUZZER” of “DATA MONITOR” and check operation status.

“BUZZER”

While hazard switch or lighting switch is ON	**: ON and OFF repeatedly**
Except above	**: OFF**

OK or NG

OK >> Check battery power supply circuit of combination meter. If OK, replace combination meter. Refer to IP-11, "Removal and Installation".
NG >> Replace BCM. Refer to BCS-18, "Removal and Installation of BCM".

Front Door Switch LH Signal Inspection

INFOID:0000000001704528

1. CHECK BCM INPUT SIGNAL

With CONSULT-III

1. Select “BCM”.
2. With “DATA MONITOR” of “BUZZER”, confirm “DOOR SW-DR” when the driver's door is operated.

“DOOR SW-DR”
When driver's door is opened : ON
When driver's door is closed : OFF

Without CONSULT-III

Check voltage between BCM harness connector and ground.

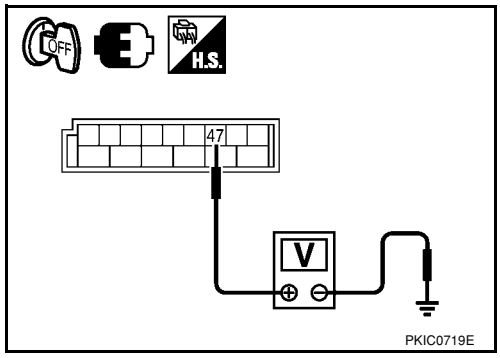

Terminals (+) BCM connector	Terminals (+) Terminal	Terminals (–)	Condition	Voltage (Approx.)
M19	47	Ground	Driver's door is opened	0
			Driver's door is closed	Battery voltage

OK or NG

OK >> Front door switch LH signal is OK. Return to DI-46, "Trouble Diagnosis".
NG >> GO TO 2.

2. CHECK FRONT DOOR SWITCH LH CIRCUIT

1. Turn ignition switch OFF.
2. Disconnect BCM connector and front door switch LH connector.
3. Check continuity between BCM harness connector (A) and front door switch LH harness connector (B).

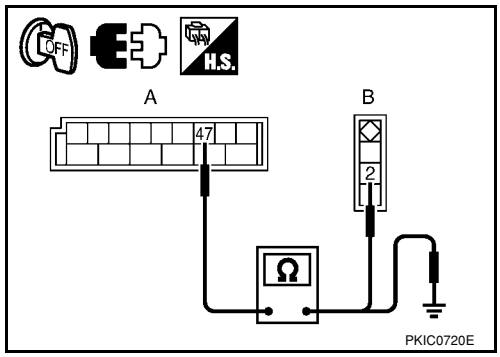

A Connector	A Terminal	B Connector	B Terminal	Continuity
M19	47	B8	2	Yes

4. Check continuity between BCM harness connector (A) and ground.

A Connector	A Terminal	Ground	Continuity
M19	47		No

OK or NG

OK >> GO TO 3.
NG >> Repair harness or connector.

3. CHECK FRONT DOOR SWITCH LH

Check front door switch LH. Refer to DI-53, "Electrical Component Inspection".

OK or NG

OK >> Replace BCM. Refer to BCS-18, "Removal and Installation of BCM".
NG >> Replace front door switch LH.

Key Switch Signal Inspection (Without Intelligent Key)

INFOID:0000000001704529

1. CHECK FUSE

Check if the key switch and key lock solenoid 10A fuse [No. 14, located in the fuse block (J/B)] is blown.

OK or NG

OK >> GO TO 2.
NG >> Be sure to repair the cause of malfunction before installing new fuse. Refer to PG-3.

2. CHECK BCM INPUT SIGNAL

With CONSULT-III

1. Select “BCM”.
2. With “DATA MONITOR” of “BUZZER”, confirm “KEY ON SW” when the key is operated.

“KEY ON SW”	
When key is inserted into ignition key cylinder	: ON
When key is removed from ignition key cylinder	: OFF

Without CONSULT-III

Check voltage between BCM harness connector and ground.

Terminals (+) BCM connector	Terminals (+) Terminal	Terminals (–)	Condition	Voltage (Approx.)
M18	37	Ground	Key is inserted	Battery voltage
			Key is removed	0 V

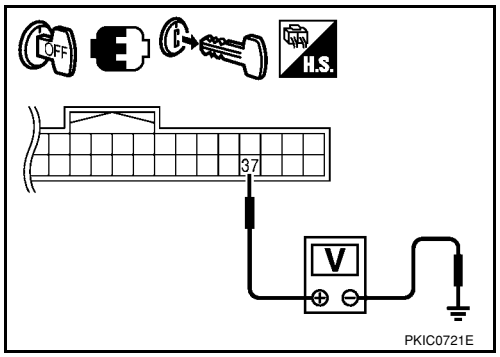

OK or NG

OK >> Key switch signal is OK. Return to DI-46, "Trouble Diagnosis".
NG >> GO TO 3.

3. CHECK KEY SWITCH

1. Turn ignition switch OFF.
2. Disconnect key switch and key lock solenoid connector.
3. Check continuity between key switch and key lock solenoid terminals 1 and 2.

Terminals		Condition	Continuity
1	2	When key is inserted into ignition key cylinder	Yes
		When key is removed from ignition key cylinder	No

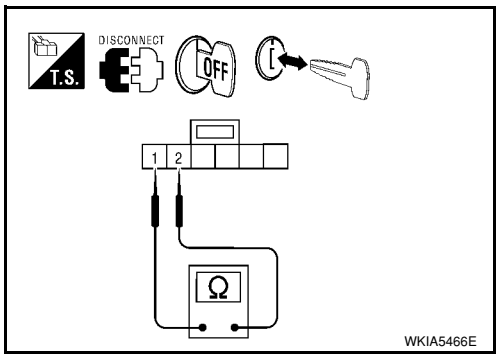

OK or NG

OK >> GO TO 4.
NG >> Replace key switch and key lock solenoid.

4. CHECK KEY SWITCH CIRCUIT

1. Disconnect BCM connector.

2. Check continuity between BCM harness connector (A) and key switch and key lock solenoid harness connector (B).

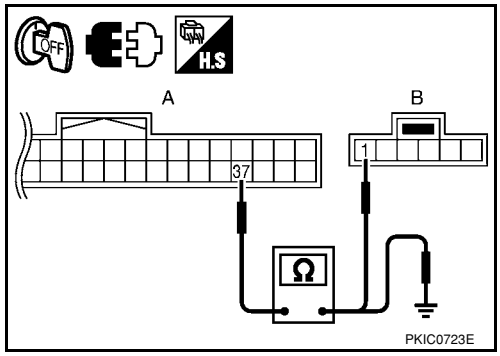

A		B		Continuity
Connector	Terminal	Connector	Terminal	
M18	37	M27	1	Yes

3. Check continuity between BCM harness connector (A) and ground.

A		Ground	Continuity
Connector	Terminal		
M18	37		No

OK or NG

OK >> GO TO 5.
NG >> Repair harness or connector.

5. CHECK KEY SWITCH POWER SUPPLY CIRCUIT

Check voltage between key switch and key lock solenoid harness connector and ground.

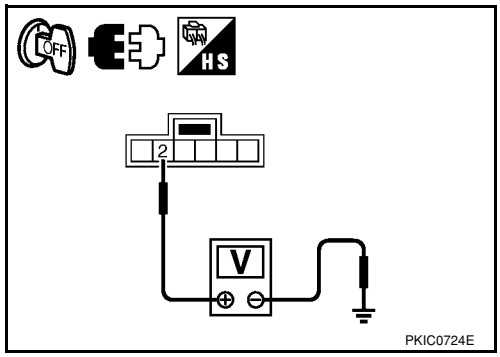

Terminals			Voltage (Approx.)
(+)		(–)	
Key switch and key lock solenoid connector	Terminal		
M27	2	Ground	Battery voltage

OK or NG

OK >> Replace BCM. Refer to BCS-18, "Removal and Installation of BCM".
NG >> Repair harness or connector.

Key Switch and Ignition Knob Switch Signal Inspection (With Intelligent Key, When Mechanical Key Is Used)

INFOID:0000000001704530

1. CHECK FUSE

Check if the key switch and ignition knob switch 10A fuse (No. 31, located in the fuse and fusible link box) is blown.

OK or NG

OK >> GO TO 2.
NG >> Be sure to repair the cause of malfunction before installing new fuse. Refer to PG-3.

2. CHECK BCM INPUT SIGNAL

With CONSULT-III

1. Select “BCM”.
2. With “DATA MONITOR” of “BUZZER”, confirm “KEY ON SW” when the key is operated.

“KEY ON SW”

When key is inserted into ignition key cylinder	**: ON**
When key is removed from ignition key cylinder	**: OFF**

Without CONSULT-III

Check voltage between BCM harness connector and ground.

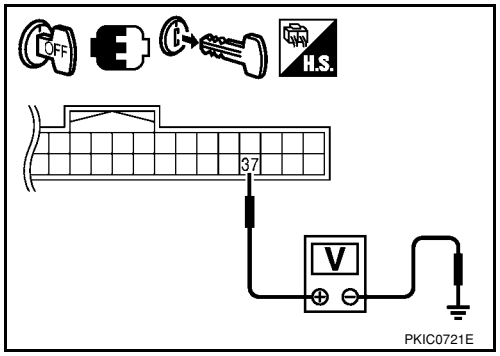

Terminals			Condition	Voltage (Approx.)
(+)		(–)		
BCM connector	Terminal			
M18	37	Ground	Key is inserted	Battery voltage
			Key is removed	0

OK or NG

OK >> Key switch and ignition knob switch signal is OK. Return to DI-46, "Trouble Diagnosis".

NG >> GO TO 3.

3. CHECK KEY SWITCH

1. Turn ignition switch OFF.
2. Disconnect key switch and ignition knob switch connector.
3. Check continuity between key switch and ignition knob switch terminals 1 and 2.

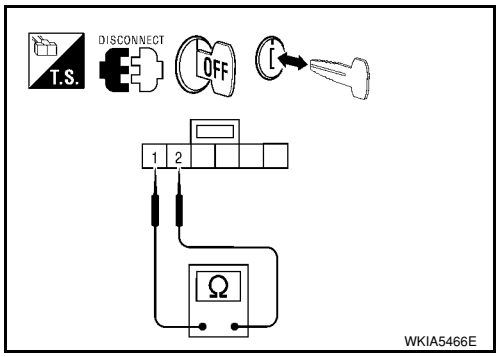

Terminals		Condition	Continuity
1	2	When key is inserted into ignition key cylinder	Yes
		When key is removed from ignition key cylinder	No

OK or NG

OK >> GO TO 4.

NG >> Replace key switch and ignition knob switch.

4. CHECK KEY SWITCH CIRCUIT

1. Disconnect BCM connector.
2. Check continuity between BCM harness connector (A) and key switch and ignition knob switch harness connector (B).

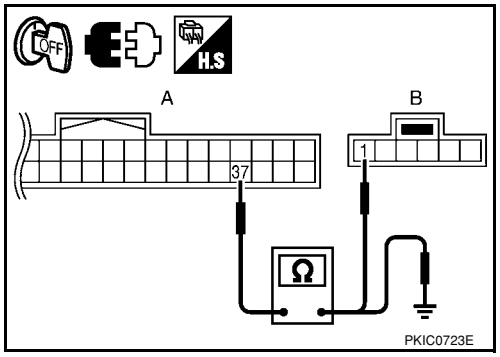

A		B		Continuity
Connector	Terminal	Connector	Terminal	
M18	37	M73	1	Yes

3. Check continuity between BCM harness connector (A) and ground.

A		Ground	Continuity
Connector	Terminal		
M18	37		No

OK or NG

OK >> GO TO 5.

NG >> Repair harness or connector.

5. CHECK KEY SWITCH POWER SUPPLY CIRCUIT

Check voltage between key switch and ignition knob switch harness connector and ground.

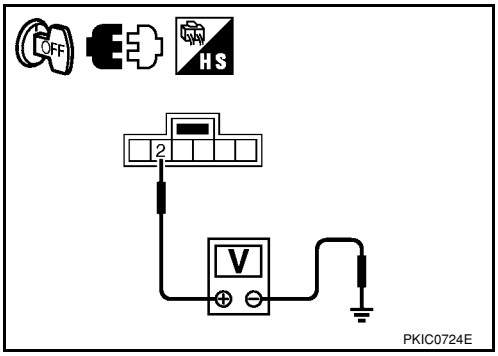

Terminals			Voltage (Approx.)
(+)		(–)	
Key switch and ignition knob switch connector	Terminal		
M73	2	Ground	Battery voltage

OK or NG

OK >> Replace BCM. Refer to BCS-18, "Removal and Installation of BCM".

NG >> Repair harness or connector.

Lighting Switch Signal Inspection

INFOID:0000000001704531

1. CHECK BCM INPUT SIGNAL

1. Select “BCM”.
2. With “DATA MONITOR” of “BUZZER”, confirm “LIGHT SW 1ST” when the lighting switch is operated.

“LIGHT SW 1ST”

Lighting switch (1st position) : ON

Lighting switch (OFF) : OFF

OK or NG

OK >> Lighting switch signal is OK. Return to DI-46, "Trouble Diagnosis".

NG >> Check the lighting switch. Refer to LT-63, "Combination Switch Inspection".

Parking Brake Switch Signal Inspection

INFOID:0000000001815489

1. CHECK PARKING BRAKE SWITCH SIGNAL INPUT (COMBINATION METER)

1. Turn ignition switch ON.
2. Check voltage between combination meter harness connector M24 terminal 10 and ground.

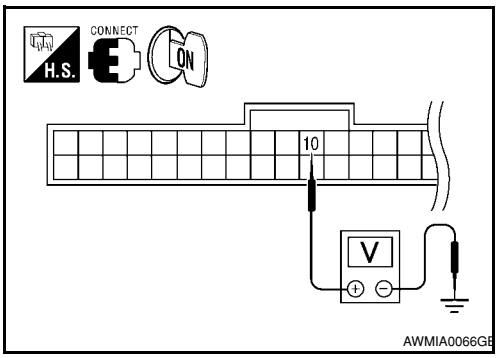

Terminals			Condition	Voltage (Approx.)
(+)		(–)		
Combination meter connector	Terminal			
M24	10	Ground	Parking brake released	Battery voltage
			Parking brake applied	0

OK or NG

OK >> Replace combination meter. Refer to DI-20, "Removal and Installation".

NG >> GO TO 2.

2. CHECK PARKING BRAKE SWITCH CIRCUIT

1. Turn ignition switch OFF.
2. Disconnect combination meter connector and parking brake switch connector.

3. Check continuity between combination meter harness connector (A) and parking brake switch harness connector (B).

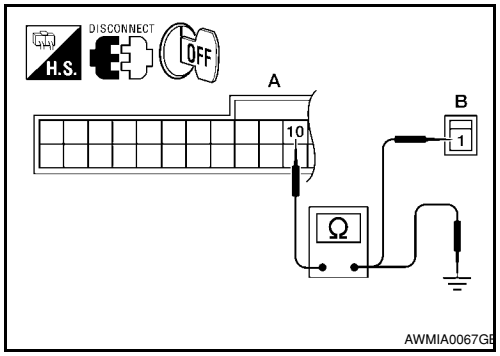

A		B		Continuity
Connector	Terminal	Connector	Terminal	
M24	10	M17	1	Yes

4. Check continuity between combination meter harness connector (A) and ground.

A		Ground	Continuity
Connector	Terminal		
M24	10		No

OK or NG

OK >> GO TO 3.
NG >> Repair harness or connector.

3. CHECK PARKING BRAKE SWITCH

Check parking brake switch. Refer to DI-53, "Electrical Component Inspection".

OK or NG

OK >> Check parking brake switch case ground.
NG >> Replace parking brake switch.

Electrical Component Inspection

INFOID:0000000001704532

FRONT DOOR SWITCH LH

Check continuity between terminal 2 and door switch case ground.

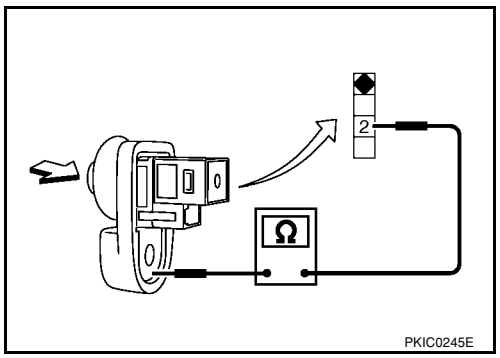

Terminal		Condition	Continuity
2	Door switch case ground	When door switch is released.	Yes
		When door switch is pushed.	No

PARKING BRAKE SWITCH

Check continuity between terminal 1 and parking brake switch case ground.

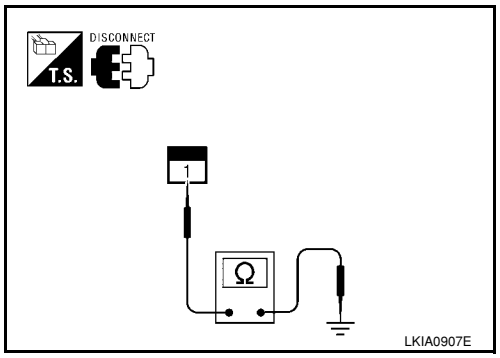

Terminal		Condition	Continuity
1	Parking brake switch case ground	When parking brake is applied.	Yes
		When parking brake is released.	No

SECTION EC
ENGINE CONTROL SYSTEM

CONTENTS

SERVICE INFORMATION 9

INDEX FOR DTC 9
DTC No. Index 9
Alphabetical Index 12

PRECAUTIONS 16
Precaution for Supplemental Restraint System (SRS) "AIR BAG" and "SEAT BELT PRE-TENSIONER" 16
Precaution for Procedure without Cowl Top Cover...16
On Board Diagnosis (OBD) System of Engine and A/T, CVT 16
Precaution 17

PREPARATION 20
Special Service Tool 20
Commercial Service Tool 21

ENGINE CONTROL SYSTEM 22
Schematic 22
Multiport Fuel Injection (MFI) System 22
Electronic Ignition (EI) System 25
Fuel Cut Control (at No Load and High Engine Speed) 25

AIR CONDITIONING CUT CONTROL 27
Input/Output Signal Chart 27
System Description 27

AUTOMATIC SPEED CONTROL DEVICE (ASCD) 28
System Description 28
Component Description 29

CAN COMMUNICATION 30
System Description 30

EVAPORATIVE EMISSION SYSTEM 31
Description 31
Component Inspection 33
Removal and Installation 35
How to Detect Fuel Vapor Leakage 35

ON BOARD REFUELING VAPOR RECOVERY (ORVR) 38
System Description 38
Diagnosis Procedure 38
Component Inspection 40

POSITIVE CRANKCASE VENTILATION 43
Description 43
Component Inspection 43

NVIS (NISSAN VEHICLE IMMOBILIZER SYSTEM-NATS) 45
Description 45

ON BOARD DIAGNOSTIC (OBD) SYSTEM 46
Introduction 46
Two Trip Detection Logic 46
Emission-related Diagnostic Information 47
Malfunction Indicator Lamp (MIL) 60
OBD System Operation Chart 63

BASIC SERVICE PROCEDURE 69
Basic Inspection 69
Idle Speed and Ignition Timing Check 73
Procedure After Replacing ECM 75
VIN Registration 75
Accelerator Pedal Released Position Learning 76
Throttle Valve Closed Position Learning 76
Idle Air Volume Learning 76
Fuel Pressure Check 78

TROUBLE DIAGNOSIS 81
Trouble Diagnosis Introduction 81
DTC Inspection Priority Chart 86
Fail-Safe Chart 87
Symptom Matrix Chart 88
Engine Control Component Parts Location 93
Vacuum Hose Drawing 99
Circuit Diagram 100
ECM Harness Connector Terminal Layout 102

ECM Terminal and Reference Value 102
CONSULT-II Function (ENGINE) 109
Generic Scan Tool (GST) Function 119
CONSULT-II Reference Value in Data Monitor Mode 121
Major Sensor Reference Graph in Data Monitor Mode 124

TROUBLE DIAGNOSIS - SPECIFICATION VALUE 127
Description 127
Testing Condition 127
Inspection Procedure 127
Diagnosis Procedure 127

TROUBLE DIAGNOSIS FOR INTERMITTENT INCIDENT 136
Description 136
Diagnosis Procedure 136

POWER SUPPLY AND GROUND CIRCUIT .. 137
Wiring Diagram 137
Diagnosis Procedure 138
Ground Inspection 142

DTC U1000, U1001 CAN COMMUNICATION LINE 143
Description 143
On Board Diagnosis Logic 143
DTC Confirmation Procedure 143
Wiring Diagram 144
Diagnosis Procedure 144

DTC U1010 CAN COMMUNICATION 145
Description 145
On Board Diagnosis Logic 145
DTC Confirmation Procedure 145
Diagnosis Procedure 145

DTC P0011 IVT CONTROL 147
Description 147
CONSULT-II Reference Value in Data Monitor Mode 147
On Board Diagnosis Logic 148
DTC Confirmation Procedure 148
Diagnosis Procedure 149
Component Inspection 150
Removal and Installation 150

DTC P0031, P0032 A/F SENSOR 1 HEATER. 151
Description 151
CONSULT-II Reference Value in Data Monitor Mode 151
On Board Diagnosis Logic 151
DTC Confirmation Procedure 151
Wiring Diagram 152
Diagnosis Procedure 153
Component Inspection 154
Removal and Installation 155

DTC P0037, P0038 HO2S2 HEATER 156
Description 156
CONSULT-II Reference Value in Data Monitor Mode 156
On Board Diagnosis Logic 156
DTC Confirmation Procedure 156
Wiring Diagram 158
Diagnosis Procedure 159
Component Inspection 160
Removal and Installation 161

DTC P0075 IVT CONTROL SOLENOID VALVE 162
Component Description 162
CONSULT-II Reference Value in Data Monitor Mode 162
On Board Diagnosis Logic 162
DTC Confirmation Procedure 162
Wiring Diagram 163
Diagnosis Procedure 164
Component Inspection 165
Removal and Installation 166

DTC P0101 MAF SENSOR 167
Component Description 167
CONSULT-II Reference Value in Data Monitor Mode 167
On Board Diagnosis Logic 167
DTC Confirmation Procedure 167
Overall Function Check 169
Wiring Diagram 170
Diagnosis Procedure 171
Component Inspection 173
Removal and Installation 174

DTC P0102, P0103 MAF SENSOR 175
Component Description 175
CONSULT-II Reference Value in Data Monitor Mode 175
On Board Diagnosis Logic 175
DTC Confirmation Procedure 175
Wiring Diagram 177
Diagnosis Procedure 178
Component Inspection 180
Removal and Installation 181

DTC P0112, P0113 IAT SENSOR 182
Component Description 182
On Board Diagnosis Logic 182
DTC Confirmation Procedure 182
Wiring Diagram 184
Diagnosis Procedure 184
Component Inspection 186
Removal and Installation 186

DTC P0117, P0118 ECT SENSOR 187
Component Description 187
On Board Diagnosis Logic 187
DTC Confirmation Procedure 188
Wiring Diagram 189

Diagnosis Procedure 189
Component Inspection 191
Removal and Installation 191

DTC P0122, P0123 TP SENSOR 192
Component Description 192
CONSULT-II Reference Value in Data Monitor Mode 192
On Board Diagnosis Logic 192
DTC Confirmation Procedure 192
Wiring Diagram 194
Diagnosis Procedure 195
Component Inspection 197
Removal and Installation 197

DTC P0125 ECT SENSOR 198
Description 198
On Board Diagnosis Logic 198
DTC Confirmation Procedure 198
Diagnosis Procedure 199
Component Inspection 200
Removal and Installation 200

DTC P0127 IAT SENSOR 201
Component Description 201
On Board Diagnosis Logic 201
DTC Confirmation Procedure 201
Diagnosis Procedure 202
Component Inspection 202
Removal and Installation 203

DTC P0128 THERMOSTAT FUNCTION 204
On Board Diagnosis Logic 204
DTC Confirmation Procedure 204
Diagnosis Procedure 204
Component Inspection 204
Removal and Installation 205

DTC P0130 A/F SENSOR 1 206
Component Description 206
CONSULT-II Reference Value in Data Monitor Mode 206
On Board Diagnosis Logic 206
DTC Confirmation Procedure 206
Overall Function Check 208
Wiring Diagram 209
Diagnosis Procedure 210
Removal and Installation 212

DTC P0131 A/F SENSOR 1 213
Component Description 213
CONSULT-II Reference Value in Data Monitor Mode 213
On Board Diagnosis Logic 213
DTC Confirmation Procedure 213
Wiring Diagram 215
Diagnosis Procedure 216
Removal and Installation 218

DTC P0132 A/F SENSOR 1 219
Component Description 219
CONSULT-II Reference Value in Data Monitor Mode 219
On Board Diagnosis Logic 219
DTC Confirmation Procedure 219
Wiring Diagram 221
Diagnosis Procedure 222
Removal and Installation 224

DTC P0133 A/F SENSOR 1 225
Component Description 225
CONSULT-II Reference Value in Data Monitor Mode 225
On Board Diagnosis Logic 225
DTC Confirmation Procedure 225
Wiring Diagram 228
Diagnosis Procedure 229
Removal and Installation 232

DTC P0137 HO2S2 233
Component Description 233
CONSULT-II Reference Value in Data Monitor Mode 233
On Board Diagnosis Logic 233
DTC Confirmation Procedure 233
Overall Function Check 234
Wiring Diagram 235
Diagnosis Procedure 236
Component Inspection 238
Removal and Installation 239

DTC P0138 HO2S2 240
Component Description 240
CONSULT-II Reference Value in Data Monitor Mode 240
On Board Diagnosis Logic 240
DTC Confirmation Procedure 241
Overall Function Check 242
Wiring Diagram 243
Diagnosis Procedure 244
Component Inspection 247
Removal and Installation 248

DTC P0139 HO2S2 250
Component Description 250
CONSULT-II Reference Value in Data Monitor Mode 250
On Board Diagnosis Logic 250
DTC Confirmation Procedure 250
Overall Function Check 251
Wiring Diagram 252
Diagnosis Procedure 253
Component Inspection 255
Removal and Installation 256

DTC P0171 FUEL INJECTION SYSTEM FUNCTION 257
On Board Diagnosis Logic 257
DTC Confirmation Procedure 257
Wiring Diagram 259

Diagnosis Procedure 260

DTC P0172 FUEL INJECTION SYSTEM FUNCTION 264
On Board Diagnosis Logic 264
DTC Confirmation Procedure 264
Wiring Diagram 266
Diagnosis Procedure 267

DTC P0181 FTT SENSOR 270
Component Description 270
On Board Diagnosis Logic 270
DTC Confirmation Procedure 270
Wiring Diagram 271
Diagnosis Procedure 271
Component Inspection 273
Removal and Installation 273

DTC P0182, P0183 FTT SENSOR 274
Component Description 274
On Board Diagnosis Logic 274
DTC Confirmation Procedure 274
Wiring Diagram 275
Diagnosis Procedure 275
Component Inspection 277
Removal and Installation 277

DTC P0222, P0223 TP SENSOR 278
Component Description 278
CONSULT-II Reference Value in Data Monitor Mode 278
On Board Diagnosis Logic 278
DTC Confirmation Procedure 278
Wiring Diagram 280
Diagnosis Procedure 281
Component Inspection 283
Removal and Installation 283

DTC P0300 - P0304 MULTIPLE CYLINDER MISFIRE, NO. 1 - 4 CYLINDER MISFIRE 284
On Board Diagnosis Logic 284
DTC Confirmation Procedure 284
Diagnosis Procedure 285

DTC P0327, P0328 KS 291
Component Description 291
On Board Diagnosis Logic 291
DTC Confirmation Procedure 291
Wiring Diagram 292
Diagnosis Procedure 293
Component Inspection 294
Removal and Installation 294

DTC P0335 CKP SENSOR (POS) 295
Component Description 295
CONSULT-II Reference Value in Data Monitor Mode 295
On Board Diagnosis Logic 295
DTC Confirmation Procedure 295
Wiring Diagram 297
Diagnosis Procedure 298
Component Inspection 301
Removal and Installation 301

DTC P0340 CMP SENSOR (PHASE) 302
Component Description 302
CONSULT-II Reference Value in Data Monitor Mode 302
On Board Diagnosis Logic 302
DTC Confirmation Procedure 302
Wiring Diagram 304
Diagnosis Procedure 305
Component Inspection 307
Removal and Installation 307

DTC P0420 THREE WAY CATALYST FUNCTION 308
On Board Diagnosis Logic 308
DTC Confirmation Procedure 308
Overall Function Check 309
Diagnosis Procedure 310

DTC P0441 EVAP CONTROL SYSTEM 313
System Description 313
On Board Diagnosis Logic 313
DTC Confirmation Procedure 313
Overall Function Check 314
Diagnosis Procedure 315

DTC P0442 EVAP CONTROL SYSTEM 318
On Board Diagnosis Logic 318
DTC Confirmation Procedure 318
Diagnosis Procedure 320

DTC P0443 EVAP CANISTER PURGE VOLUME CONTROL SOLENOID VALVE 325
Description 325
CONSULT-II Reference Value in Data Monitor Mode 325
On Board Diagnosis Logic 326
DTC Confirmation Procedure 326
Wiring Diagram 327
Diagnosis Procedure 328
Component Inspection 331
Removal and Installation 331

DTC P0444, P0445 EVAP CANISTER PURGE VOLUME CONTROL SOLENOID VALVE 332
Description 332
CONSULT-II Reference Value in Data Monitor Mode 332
On Board Diagnosis Logic 333
DTC Confirmation Procedure 333
Wiring Diagram 334
Diagnosis Procedure 335
Component Inspection 337
Removal and Installation 337

DTC P0447 EVAP CANISTER VENT CONTROL VALVE 338

Component Description 338
CONSULT-II Reference Value in Data Monitor Mode 338
On Board Diagnosis Logic 338
DTC Confirmation Procedure 338
Wiring Diagram 340
Diagnosis Procedure 341
Component Inspection 343

DTC P0448 EVAP CANISTER VENT CONTROL VALVE 345
Component Description 345
CONSULT-II Reference Value in Data Monitor Mode 345
On Board Diagnosis Logic 345
DTC Confirmation Procedure 345
Wiring Diagram 347
Diagnosis Procedure 348
Component Inspection 349

DTC P0451 EVAP CONTROL SYSTEM PRESSURE SENSOR 351
Component Description 351
CONSULT-II Reference Value in Data Monitor Mode 351
On Board Diagnosis Logic 351
DTC Confirmation Procedure 351
Diagnosis Procedure 352
Component Inspection 353

DTC P0452 EVAP CONTROL SYSTEM PRESSURE SENSOR 355
Component Description 355
CONSULT-II Reference Value in Data Monitor Mode 355
On Board Diagnosis Logic 355
DTC Confirmation Procedure 355
Wiring Diagram 357
Diagnosis Procedure 358
Component Inspection 361

DTC P0453 EVAP CONTROL SYSTEM PRESSURE SENSOR 362
Component Description 362
CONSULT-II Reference Value in Data Monitor Mode 362
On Board Diagnosis Logic 362
DTC Confirmation Procedure 362
Wiring Diagram 364
Diagnosis Procedure 365
Component Inspection 369

DTC P0455 EVAP CONTROL SYSTEM 370
On Board Diagnosis Logic 370
DTC Confirmation Procedure 370
Diagnosis Procedure 372

DTC P0456 EVAP CONTROL SYSTEM 377
On Board Diagnosis Logic 377
DTC Confirmation Procedure 378
Overall Function Check 378
Diagnosis Procedure 379

DTC P0460 FUEL LEVEL SENSOR 385
Component Description 385
On Board Diagnosis Logic 385
DTC Confirmation Procedure 385
Diagnosis Procedure 386
Removal and Installation 386

DTC P0461 FUEL LEVEL SENSOR 387
Component Description 387
On Board Diagnosis Logic 387
Overall Function Check 387
Diagnosis Procedure 388
Removal and Installation 388

DTC P0462, P0463 FUEL LEVEL SENSOR .. 389
Component Description 389
On Board Diagnosis Logic 389
DTC Confirmation Procedure 389
Diagnosis Procedure 390
Removal and Installation 390

DTC P0500 VSS 391
Description 391
On Board Diagnosis Logic 391
DTC Confirmation Procedure 391
Overall Function Check 392
Diagnosis Procedure 392

DTC P0506 ISC SYSTEM 393
Description 393
On Board Diagnosis Logic 393
DTC Confirmation Procedure 393
Diagnosis Procedure 393

DTC P0507 ISC SYSTEM 395
Description 395
On Board Diagnosis Logic 395
DTC Confirmation Procedure 395
Diagnosis Procedure 395

DTC P0605 ECM 397
Component Description 397
On Board Diagnosis Logic 397
DTC Confirmation Procedure 397
Diagnosis Procedure 398

DTC P0643 SENSOR POWER SUPPLY 400
On Board Diagnosis Logic 400
DTC Confirmation Procedure 400
Wiring Diagram 401
Diagnosis Procedure 402

DTC P0850 PNP SWITCH 405
Component Description 405
CONSULT-II Reference Value in Data Monitor Mode 405
On Board Diagnosis Logic 405
DTC Confirmation Procedure 405

Overall Function Check 406
Wiring Diagram 407
Diagnosis Procedure 408

DTC P1148 CLOSED LOOP CONTROL 411
On Board Diagnosis Logic 411

DTC P1217 ENGINE OVER TEMPERATURE. 412
System Description 412
CONSULT-II Reference Value in Data Monitor Mode 413
On Board Diagnosis Logic 413
Overall Function Check 413
Wiring Diagram 416
Diagnosis Procedure 417
Main 13 Causes of Overheating 424
Component Inspection 424

DTC P1225 TP SENSOR 426
Component Description 426
On Board Diagnosis Logic 426
DTC Confirmation Procedure 426
Diagnosis Procedure 426
Removal and Installation 427

DTC P1226 TP SENSOR 428
Component Description 428
On Board Diagnosis Logic 428
DTC Confirmation Procedure 428
Diagnosis Procedure 428
Removal and Installation 429

DTC P1421 COLD START CONTROL 430
Description 430
On Board Diagnosis Logic 430
DTC Confirmation Procedure 430
Diagnosis Procedure 430

DTC P1564 ASCD STEERING SWITCH 432
Component Description 432
CONSULT-II Reference Value in Data Monitor Mode 432
On Board Diagnosis Logic 432
DTC Confirmation Procedure 433
Wiring Diagram 434
Diagnosis Procedure 435
Component Inspection 437

DTC P1572 ASCD BRAKE SWITCH 438
Component Description 438
CONSULT-II Reference Value in Data Monitor Mode 438
On Board Diagnosis Logic 438
DTC Confirmation Procedure 439
Wiring Diagram 440
Diagnosis Procedure 441
Component Inspection 445

DTC P1574 ASCD VEHICLE SPEED SENSOR 447
Component Description 447
On Board Diagnosis Logic 447
DTC Confirmation Procedure 447
Diagnosis Procedure 448

DTC P1715 INPUT SPEED SENSOR (TURBINE REVOLUTION SENSOR) 449
Description 449
CONSULT-II Reference Value in Data Monitor Mode 449
On Board Diagnosis Logic 449
Diagnosis Procedure 449

DTC P1715 INPUT SPEED SENSOR (PRIMARY SPEED SENSOR) 450
Description 450
CONSULT-II Reference Value in Data Monitor Mode 450
On Board Diagnosis Logic 450
DTC Confirmation Procedure 450
Diagnosis Procedure 451

DTC P1805 BRAKE SWITCH 452
Description 452
CONSULT-II Reference Value in Data Monitor Mode 452
On Board Diagnosis Logic 452
DTC Confirmation Procedure 452
Wiring Diagram 453
Diagnosis Procedure 454
Component Inspection 455

DTC P2100, P2103 THROTTLE CONTROL MOTOR RELAY 456
Component Description 456
CONSULT-II Reference Value in Data Monitor Mode 456
On Board Diagnosis Logic 456
DTC Confirmation Procedure 456
Wiring Diagram 458
Diagnosis Procedure 459

DTC P2101 ELECTRIC THROTTLE CONTROL FUNCTION 461
Description 461
On Board Diagnosis Logic 461
DTC Confirmation Procedure 461
Wiring Diagram 462
Diagnosis Procedure 463
Component Inspection 466
Removal and Installation 466

DTC P2118 THROTTLE CONTROL MOTOR ..467
Component Description 467
On Board Diagnosis Logic 467
DTC Confirmation Procedure 467
Wiring Diagram 468
Diagnosis Procedure 469
Component Inspection 470
Removal and Installation 470

DTC P2119 ELECTRIC THROTTLE CONTROL ACTUATOR **472**
Component Description 472
On Board Diagnosis Logic 472
DTC Confirmation Procedure 472
Diagnosis Procedure 473

DTC P2122, P2123 APP SENSOR **474**
Component Description 474
CONSULT-II Reference Value in Data Monitor Mode 474
On Board Diagnosis Logic 474
DTC Confirmation Procedure 474
Wiring Diagram 476
Diagnosis Procedure 477
Component Inspection 479
Removal and Installation 479

DTC P2127, P2128 APP SENSOR **480**
Component Description 480
CONSULT-II Reference Value in Data Monitor Mode 480
On Board Diagnosis Logic 480
DTC Confirmation Procedure 481
Wiring Diagram 482
Diagnosis Procedure 483
Component Inspection 485
Removal and Installation 486

DTC P2135 TP SENSOR **487**
Component Description 487
CONSULT-II Reference Value in Data Monitor Mode 487
On Board Diagnosis Logic 487
DTC Confirmation Procedure 487
Wiring Diagram 489
Diagnosis Procedure 490
Component Inspection 492
Removal and Installation 492

DTC P2138 APP SENSOR **493**
Component Description 493
CONSULT-II Reference Value in Data Monitor Mode 493
On Board Diagnosis Logic 493
DTC Confirmation Procedure 494
Wiring Diagram 495
Diagnosis Procedure 496
Component Inspection 499
Removal and Installation 499

DTC P2A00 A/F SENSOR 1 ..... **500**
Component Description 500
CONSULT-II Reference Value in Data Monitor Mode 500
On Board Diagnosis Logic 500
DTC Confirmation Procedure 500
Wiring Diagram 502
Diagnosis Procedure 503
Removal and Installation 507

ASCD BRAKE SWITCH **508**
Component Description 508
CONSULT-II Reference Value in Data Monitor Mode 508
Wiring Diagram 509
Diagnosis Procedure 510
Component Inspection 514

ASCD INDICATOR **516**
Component Description 516
CONSULT-II Reference Value in Data Monitor Mode 516
Wiring Diagram 517
Diagnosis Procedure 517

ELECTRICAL LOAD SIGNAL **519**
CONSULT-II Reference Value in Data Monitor Mode 519
Diagnosis Procedure 519

FUEL INJECTOR **521**
Component Description 521
CONSULT-II Reference Value in Data Monitor Mode 521
Wiring Diagram 522
Diagnosis Procedure 523
Component Inspection 525
Removal and Installation 525

FUEL PUMP **526**
Description 526
CONSULT-II Reference Value in Data Monitor Mode 526
Wiring Diagram 527
Diagnosis Procedure 528
Component Inspection 530
Removal and Installation 530

IGNITION SIGNAL **531**
Component Description 531
Wiring Diagram 532
Diagnosis Procedure 535
Component Inspection 538
Removal and Installation 540

REFRIGERANT PRESSURE SENSOR **541**
Component Description 541
Wiring Diagram 542
Diagnosis Procedure 543
Removal and Installation 545

MIL AND DATA LINK CONNECTOR **546**
Wiring Diagram 546

SERVICE DATA AND SPECIFICATIONS (SDS) **548**
Fuel Pressure 548
Idle Speed and Ignition Timing 548
Calculated Load Value 548
Mass Air Flow Sensor 548
Intake Air Temperature Sensor 548

Engine Coolant Temperature Sensor 548
Air Fuel Ratio (A/F) Sensor 1 Heater 549
Heated Oxygen sensor 2 Heater 549
Crankshaft Position Sensor (POS) 549
Camshaft Position Sensor (PHASE) 549
Throttle Control Motor 549
Fuel Injector 549
Fuel Pump 549

SERVICE INFORMATION

INDEX FOR DTC

DTC No. Index

INFOID:0000000001702546

NOTE:
- **If DTC U1000 or U1001 is displayed with other DTC, first perform the trouble diagnosis for DTC U1000, U1001. Refer to EC-143.**
- **If DTC U1010 is displayed with other DTC, first perform the trouble diagnosis for DTC U1010. Refer to EC-145.**

DTC*1		Items (CONSULT-II screen terms)	Reference page
CONSULT-II GST*2	ECM*3		
U1000	1000*4	CAN COMM CIRCUIT	EC-143
U1001	1001*4	CAN COMM CIRCUIT	EC-143
U1010	1010	CONTROL UNIT(CAN)	EC-145
P0000	**0000**	**NO DTC IS DETECTED. FURTHER TESTING MAY BE REQUIRED.**	—
P0011	0011	INT/V TIM CONT-B1	EC-147
P0031	0031	A/F SEN1 HTR (B1)	EC-151
P0032	0032	A/F SEN1 HTR (B1)	EC-151
P0037	0037	HO2S2 HTR (B1)	EC-156
P0038	0038	HO2S2 HTR (B1)	EC-156
P0075	0075	INT/V TIM V/CIR-B1	EC-162
P0101	0101	MAF SEN/CIRCUIT	EC-167
P0102	0102	MAF SEN/CIRCUIT	EC-175
P0103	0103	MAF SEN/CIRCUIT	EC-175
P0112	0112	IAT SEN/CIRCUIT	EC-182
P0113	0113	IAT SEN/CIRCUIT	EC-182
P0117	0117	ECT SEN/CIRC	EC-187
P0118	0118	ECT SEN/CIRC	EC-187
P0122	0122	TP SEN 2/CIRC	EC-192
P0123	0123	TP SEN 2/CIRC	EC-192
P0125	0125	ECT SENSOR	EC-198
P0127	0127	IAT SENSOR	EC-201
P0128	0128	THERMSTAT FNCTN	EC-204
P0130	0130	A/F SENSOR1 (B1)	EC-206
P0131	0131	A/F SENSOR1 (B1)	EC-213
P0132	0132	A/F SENSOR1 (B1)	EC-219
P0133	0133	A/F SENSOR1 (B1)	EC-225
P0137	0137	HO2S2 (B1)	EC-233
P0138	0138	HO2S2 (B1)	EC-240
P0139	0139	HO2S2 (B1)	EC-250
P0171	0171	FUEL SYS-LEAN-B1	EC-257
P0172	0172	FUEL SYS-RICH-B1	EC-264
P0181	0181	FTT SENSOR	EC-270

DTC*1		Items (CONSULT-II screen terms)	Reference page
CONSULT-II GST*2	ECM*3		
P0182	0182	FTT SEN/CIRCUIT	EC-274
P0183	0183	FTT SEN/CIRCUIT	EC-274
P0222	0222	TP SEN 1/CIRC	EC-278
P0223	0223	TP SEN 1/CIRC	EC-278
P0300	0300	MULTI CYL MISFIRE	EC-284
P0301	0301	CYL 1 MISFIRE	EC-284
P0302	0302	CYL 2 MISFIRE	EC-284
P0303	0303	CYL 3 MISFIRE	EC-284
P0304	0304	CYL 4 MISFIRE	EC-284
P0327	0327	KNOCK SEN/CIRC-B1	EC-291
P0328	0328	KNOCK SEN/CIRC-B1	EC-291
P0335	0335	CKP SEN/CIRCUIT	EC-295
P0340	0340	CMP SEN/CIRC-B1	EC-302
P0420	0420	TW CATALYST SYS-B1	EC-308
P0441	0441	EVAP PURG FLOW/MON	EC-313
P0442	0442	EVAP SMALL LEAK	EC-318
P0443	0443	PURG VOLUME CONT/V	EC-325
P0444	0444	PURG VOLUME CONT/V	EC-332
P0445	0445	PURG VOLUME CONT/V	EC-332
P0447	0447	VENT CONTROL VALVE	EC-338
P0448	0448	VENT CONTROL VALVE	EC-345
P0451	0451	EVAP SYS PRES SEN	EC-351
P0452	0452	EVAP SYS PRES SEN	EC-355
P0453	0453	EVAP SYS PRES SEN	EC-362
P0455	0455	EVAP GROSS LEAK	EC-370
P0456	0456	EVAP VERY SML LEAK	EC-377
P0460	0460	FUEL LEV SEN SLOSH	EC-385
P0461	0461	FUEL LEVEL SENSOR	EC-387
P0462	0462	FUEL LEVL SEN/CIRC	EC-389
P0463	0463	FUEL LEVL SEN/CIRC	EC-389
P0500	0500	VEH SPEED SEN/CIRC*5	EC-391
P0506	0506	ISC SYSTEM	EC-393
P0507	0507	ISC SYSTEM	EC-395
P0605	0605	ECM	EC-397
P0643	0643	SENSOR POWER/CIRC	EC-400
P0705	0705	PNP SW/CIRC	AT-86 (A/T), CVT-65 (CVT)
P0710	0710	ATF TEMP SEN/CIRC	AT-91 (A/T), CVT-71 (CVT)
P0715	0715	INPUT SPD SEN/CIRC	CVT-76
P0720	0720	VEH SPD SEN/CIR AT*5	AT-96 (A/T), CVT-80 (CVT)
P0725	0725	ENGINE SPEED SIG	AT-101

DTC*1		Items (CONSULT-II screen terms)	Reference page
CONSULT-II GST*2	ECM*3		
P0731	0731	A/T 1ST GR FNCTN	AT-105
P0732	0732	A/T 2ND GR FNCTN	AT-108
P0733	0733	A/T 3RD GR FNCTN	AT-111
P0734	0734	A/T 4TH GR FNCTN	AT-114
P0740	0740	TCC SOLENOID/CIRC	AT-119
P0744	0744	A/T TCC S/V FNCTN	AT-124 (A/T), CVT-93 (CVT)
P0745	0745	L/PRESS SOL/CIRC	AT-129
P0746	0746	PRS CNT SOL/A FCTN	CVT-100
P0750	0750	SFT SOL A/CIRC	AT-134
P0755	0755	SFT SOL B/CIRC	AT-139
P0776	0776	PRS CNT SOL/B FCTN	CVT-102
P0778	0778	PRS CNT SOL/B CIRC	CVT-104
P0840	0840	TR PRS SENS/A CIRC	CVT-109
P0845	0845	TR PRS SENS/B CIRC	CVT-115
P0850	0850	P-N POS SW/CIRCUIT	EC-405
P1148	1148	CLOSED LOOP-B1	EC-411
P1217	1217	ENG OVER TEMP	EC-412
P1225	1225	CTP LEARNING	EC-426
P1226	1226	CTP LEARNING	EC-428
P1421	1421	COLD START CONTROL	EC-430
P1564	1564	ASCD SW	EC-432
P1572	1572	ASCD BRAKE SW	EC-438
P1574	1574	ASCD VHL SPD SEN	EC-447
P1610 - P1615	1610 - 1615	NATS MALFUNCTION	BL-210
P1705	1705	TP SEN/CIRC CVT	CVT-125
P1715	1715	IN PULY SPEED	EC-449 (A/T), EC-450 (CVT)
P1740	1740	LU-SLCT SOL/CIRC	CVT-132
P1760	1760	O/R CLTCH SOL/CIRC	AT-144
P1777	1777	STEP MOTR CIRC	CVT-137
P1778	1778	STEP MOTR FNC	CVT-141
P1805	1805	BRAKE SW/CIRCUIT	EC-452
P2100	2100	ETC MOT PWR	EC-456
P2101	2101	ETC FUNCTION/CIRC	EC-461
P2103	2103	ETC MOT PWR	EC-456
P2118	2118	ETC MOT	EC-467
P2119	2119	ETC ACTR	EC-472
P2122	2122	APP SEN 1/CIRC	EC-474
P2123	2123	APP SEN 1/CIRC	EC-474
P2127	2127	APP SEN 2/CIRC	EC-480
P2128	2128	APP SEN 2/CIRC	EC-480
P2135	2135	TP SENSOR	EC-487

DTC*1		Items (CONSULT-II screen terms)	Reference page
CONSULT-II GST*2	ECM*3		
P2138	2138	APP SENSOR	EC-493
P2A00	2A00	A/F SENSOR1 (B1)	EC-500

*1: 1st trip DTC No. is the same as DTC No.
*2: This number is prescribed by SAE J2012.
*3: In Diagnostic Test Mode II (Self-diagnostic results), this number is controlled by NISSAN.
*4: The troubleshooting for this DTC needs CONSULT-II.
*5: When the fail-safe operations for both self-diagnoses occur, the MIL illuminates.

Alphabetical Index

INFOID:0000000001702547

NOTE:
- **If DTC U1000 or U1001 is displayed with other DTC, first perform the trouble diagnosis for DTC U1000, U1001. Refer to EC-143.**
- **If DTC U1010 is displayed with other DTC, first perform the trouble diagnosis for DTC U1010. Refer to EC-145.**

Items (CONSULT-II screen terms)	DTC*1		Reference page
	CONSULT-II GST*2	ECM*3	
A/F SENSOR1 (B1)	P0130	0130	EC-206
A/F SENSOR1 (B1)	P0131	0131	EC-213
A/F SENSOR1 (B1)	P0132	0132	EC-219
A/F SENSOR1 (B1)	P0133	0133	EC-225
A/F SENSOR1 (B1)	P2A00	2A00	EC-500
A/F SEN1 HTR (B1)	P0031	0031	EC-151
A/F SEN1 HTR (B1)	P0032	0032	EC-151
A/T 1ST GR FNCTN	P0731	0731	AT-105
A/T 2ND GR FNCTN	P0732	0732	AT-108
A/T 3RD GR FNCTN	P0733	0733	AT-111
A/T 4TH GR FNCTN	P0734	0734	AT-114
A/T TCC S/V FNCTN	P0744	0744	AT-124 (A/T), CVT-93 (CVT)
APP SEN 1/CIRC	P2122	2122	EC-474
APP SEN 1/CIRC	P2123	2123	EC-474
APP SEN 2/CIRC	P2127	2127	EC-480
APP SEN 2/CIRC	P2128	2128	EC-480
APP SENSOR	P2138	2138	EC-493
ASCD BRAKE SW	P1572	1572	EC-438
ASCD SW	P1564	1564	EC-432
ASCD VHL SPD SEN	P1574	1574	EC-447
ATF TEMP SEN/CIRC	P0710	0710	AT-91 (A/T), CVT-71 (CVT)
BRAKE SW/CIRCUIT	P1805	1805	EC-452
CAN COMM CIRCUIT	U1000	1000*4	EC-143
CAN COMM CIRCUIT	U1001	1001*4	EC-143
CKP SEN/CIRCUIT	P0335	0335	EC-295

Items (CONSULT-II screen terms)	DTC*1		Reference page
	CONSULT-II GST*2	ECM*3	
CLOSED LOOP-B1	P1148	1148	EC-411
CMP SEN/CIRC-B1	P0340	0340	EC-302
COLD START CONTROL	P1421	1421	EC-430
CONTROL UNIT(CAN)	U1010	1010	EC-145
CTP LEARNING	P1225	1225	EC-426
CTP LEARNING	P1226	1226	EC-428
CYL 1 MISFIRE	P0301	0301	EC-284
CYL 2 MISFIRE	P0302	0302	EC-284
CYL 3 MISFIRE	P0303	0303	EC-284
CYL 4 MISFIRE	P0304	0304	EC-284
ECM	P0605	0605	EC-397
ECT SEN/CIRC	P0117	0117	EC-187
ECT SEN/CIRC	P0118	0118	EC-187
ECT SENSOR	P0125	0125	EC-198
ENG OVER TEMP	P1217	1217	EC-412
ENGINE SPEED SIG	P0725	0725	AT-101
ETC ACTR	P2119	2119	EC-472
ETC FUNCTION/CIRC	P2101	2101	EC-461
ETC MOT	P2118	2118	EC-467
ETC MOT PWR	P2100	2100	EC-456
ETC MOT PWR	P2103	2103	EC-456
EVAP GROSS LEAK	P0455	0455	EC-370
EVAP PURG FLOW/MON	P0441	0441	EC-313
EVAP SMALL LEAK	P0442	0442	EC-318
EVAP SYS PRES SEN	P0451	0451	EC-351
EVAP SYS PRES SEN	P0452	0452	EC-355
EVAP SYS PRES SEN	P0453	0453	EC-362
EVAP VERY SML LEAK	P0456	0456	EC-377
FTT SEN/CIRCUIT	P0182	0182	EC-274
FTT SEN/CIRCUIT	P0183	0183	EC-274
FTT SENSOR	P0181	0181	EC-270
FUEL LEV SEN SLOSH	P0460	0460	EC-385
FUEL LEVEL SENSOR	P0461	0461	EC-387
FUEL LEVL SEN/CIRC	P0462	0462	EC-389
FUEL LEVL SEN/CIRC	P0463	0463	EC-389
FUEL SYS-LEAN-B1	P0171	0171	EC-257
FUEL SYS-RICH-B1	P0172	0172	EC-264
HO2S2 (B1)	P0137	0137	EC-233
HO2S2 (B1)	P0138	0138	EC-240
HO2S2 (B1)	P0139	0139	EC-250
HO2S2 HTR (B1)	P0037	0037	EC-156
HO2S2 HTR (B1)	P0038	0038	EC-156

Items (CONSULT-II screen terms)	DTC*1		Reference page
	CONSULT-II GST*2	ECM*3	
IAT SEN/CIRCUIT	P0112	0112	EC-182
IAT SEN/CIRCUIT	P0113	0113	EC-182
IAT SENSOR	P0127	0127	EC-201
INPUT SPD SEN/CIRC	P0715	0715	EC-450
IN PULY SPEED	P1715	1715	EC-449 (A/T), EC-450 (CVT)
INT/V TIM CONT-B1	P0011	0011	EC-147
INT/V TIM V/CIR-B1	P0075	0075	EC-162
ISC SYSTEM	P0506	0506	EC-393
ISC SYSTEM	P0507	0507	EC-395
KNOCK SEN/CIRC-B1	P0327	0327	EC-291
KNOCK SEN/CIRC-B1	P0328	0328	EC-291
LU-SLCT SOL/CIRC	P1740	1740	CVT-132
L/PRESS SOL/CIRC	P0745	0745	AT-129
MAF SEN/CIRCUIT	P0101	0101	EC-167
MAF SEN/CIRCUIT	P0102	0102	EC-175
MAF SEN/CIRCUIT	P0103	0103	EC-175
MULTI CYL MISFIRE	P0300	0300	EC-284
NATS MALFUNCTION	P1610 - P1615	1610 - 1615	BL-210
NO DTC IS DETECTED. FURTHER TESTING MAY BE REQUIRED.	**P0000**	**0000**	—
O/R CLTCH SOL/CIRC	P1760	1760	AT-144
P-N POS SW/CIRCUIT	P0850	0850	EC-405
PNP SW/CIRC	P0705	0705	AT-86 (A/T), CVT-65 (CVT)
PRS CNT SOL/A FCTN	P0746	0746	CVT-100
PRS CNT SOL/B CIRC	P0778	0778	CVT-104
PRS CNT SOL/B FCTN	P0776	0776	CVT-102
PURG VOLUME CONT/V	P0443	0443	EC-325
PURG VOLUME CONT/V	P0444	0444	EC-332
PURG VOLUME CONT/V	P0445	0445	EC-332
SENSOR POWER/CIRC	P0643	0643	EC-400
SFT SOL A/CIRC	P0750	0750	AT-134
SFT SOL B/CIRC	P0755	0755	AT-139
STEP MOTR CIRC	P1777	1777	CVT-137
STEP MOTR FNC	P1778	1778	CVT-141
TCC SOLENOID/CIRC	P0740	0740	AT-119
THERMSTAT FNCTN	P0128	0128	EC-204
TP SEN 1/CIRC	P0222	0222	EC-278
TP SEN 1/CIRC	P0223	0223	EC-278
TP SEN 2/CIRC	P0122	0122	EC-192
TP SEN 2/CIRC	P0123	0123	EC-192
TP SENSOR	P2135	2135	EC-487

Items (CONSULT-II screen terms)	DTC*1		Reference page
	CONSULT-II GST*2	ECM*3	
TP SEN/CIRC A/T	P1705	1705	CVT-125
TR PRS SENS/A CIRC	P0840	0840	CVT-109
TR PRS SENS/B CIRC	P0845	0845	CVT-115
TW CATALYST SYS-B1	P0420	0420	EC-308
VEH SPD SEN/CIR AT*5	P0720	0720	AT-96 (A/T). CVT-80 (CVT)
VEH SPEED SEN/CIRC*5	P0500	0500	EC-391
VENT CONTROL VALVE	P0447	0447	EC-338
VENT CONTROL VALVE	P0448	0448	EC-345

*1: 1st trip DTC No. is the same as DTC No.
*2: This number is prescribed by SAE J2012.
*3: In Diagnostic Test Mode II (Self-diagnostic results), this number is controlled by NISSAN.
*4: The troubleshooting for this DTC needs CONSULT-II.
*5: When the fail-safe operations for both self-diagnoses occur, the MIL illuminates.

PRECAUTIONS

Precaution for Supplemental Restraint System (SRS) "AIR BAG" and "SEAT BELT PRE-TENSIONER"

INFOID:0000000001702548

The Supplemental Restraint System such as “AIR BAG” and “SEAT BELT PRE-TENSIONER”, used along with a front seat belt, helps to reduce the risk or severity of injury to the driver and front passenger for certain types of collision. This system includes seat belt switch inputs and dual stage front air bag modules. The SRS system uses the seat belt switches to determine the front air bag deployment, and may only deploy one front air bag, depending on the severity of a collision and whether the front occupants are belted or unbelted.
Information necessary to service the system safely is included in the SRS and SB section of this Service Manual.

WARNING:

- **To avoid rendering the SRS inoperative, which could increase the risk of personal injury or death in the event of a collision which would result in air bag inflation, all maintenance must be performed by an authorized NISSAN/INFINITI dealer.**
- **Improper maintenance, including incorrect removal and installation of the SRS, can lead to personal injury caused by unintentional activation of the system. For removal of Spiral Cable and Air Bag Module, see the SRS section.**
- **Do not use electrical test equipment on any circuit related to the SRS unless instructed to in this Service Manual. SRS wiring harnesses can be identified by yellow and/or orange harnesses or harness connectors.**

Precaution for Procedure without Cowl Top Cover

INFOID:0000000001702549

When performing the procedure after removing cowl top cover, cover the lower end of windshield with urethane, etc.

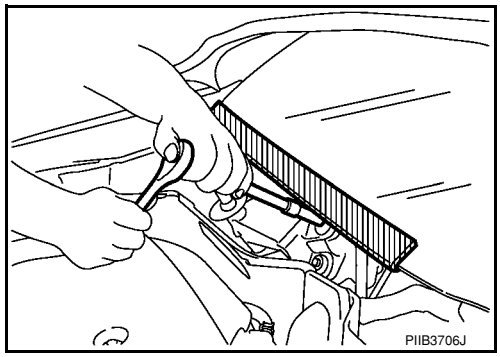

On Board Diagnosis (OBD) System of Engine and A/T, CVT

INFOID:0000000001702550

The ECM has an on board diagnostic system. It will light up the malfunction indicator lamp (MIL) to warn the driver of a malfunction causing emission deterioration.

CAUTION:

- **Be sure to turn the ignition switch OFF and disconnect the battery ground cable before any repair or inspection work. The open/short circuit of related switches, sensors, solenoid valves, etc. will cause the MIL to light up.**
- **Be sure to connect and lock the connectors securely after work. A loose (unlocked) connector will cause the MIL to light up due to the open circuit. (Be sure the connector is free from water, grease, dirt, bent terminals, etc.)**
- **Certain systems and components, especially those related to OBD, may use a new style slide-locking type harness connector. For description and how to disconnect, refer to PG-65.**
- **Be sure to route and secure the harnesses properly after work. The interference of the harness with a bracket, etc. may cause the MIL to light up due to the short circuit.**
- **Be sure to connect rubber tubes properly after work. A misconnected or disconnected rubber tube may cause the MIL to light up due to the malfunction of the fuel injection system, etc.**
- **Be sure to erase the unnecessary malfunction information (repairs completed) from the ECM and TCM (Transmission control module) before returning the vehicle to the customer.**

Precaution

INFOID:0000000001702551

- **Always use a 12 volt battery as power source.**
- **Do not attempt to disconnect battery cables while engine is running.**
- **Before connecting or disconnecting the ECM harness connector, turn ignition switch OFF and disconnect negative battery cable. Failure to do so may damage the ECM because battery voltage is applied to ECM even if ignition switch is turned OFF.**
- **Before removing parts, turn ignition switch OFF and then disconnect negative battery cable.**

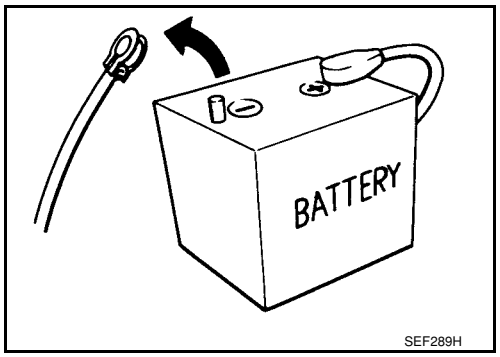

SEF289H

- **Do not disassemble ECM.**
- **If battery cable is disconnected, the memory will return to the initial ECM values.**
  The ECM will now start to self-control at its initial values. Engine operation can vary slightly when the cable is disconnected. However, this is not an indication of a malfunction. Do not replace parts because of a slight variation.
- **If the battery is disconnected, the following emission-related diagnostic information will be lost within 24 hours.**
- **Diagnostic trouble codes**
- **1st trip diagnostic trouble codes**
- **Freeze frame data**
- **1st trip freeze frame data**
- **System readiness test (SRT) codes**
- **Test values**

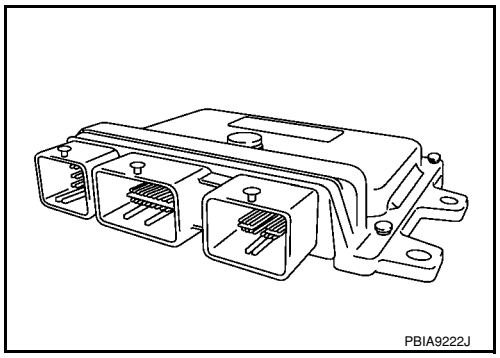
PBIA9222J

- **When connecting ECM harness connector, fasten (B) it securely with a lever (1) as far as it will go as shown in the figure.**
- **ECM (2)**
- **Loosen (A)**

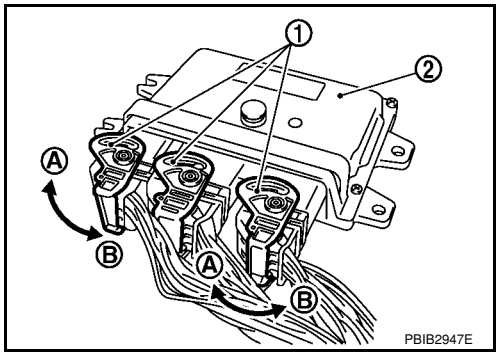

PBIB2947E

- **When connecting or disconnecting pin connectors into or from ECM, take care not to damage pin terminals (bend or break).**
  Make sure that there are not any bends or breaks on ECM pin terminal, when connecting pin connectors.
- **Securely connect ECM harness connectors.**
  A poor connection can cause an extremely high (surge) voltage to develop in coil and condenser, thus resulting in damage to ICs.
- **Keep engine control system harness at least 10 cm (4 in) away from adjacent harness, to prevent engine control system malfunctions due to receiving external noise, degraded operation of ICs, etc.**
- **Keep engine control system parts and harness dry.**

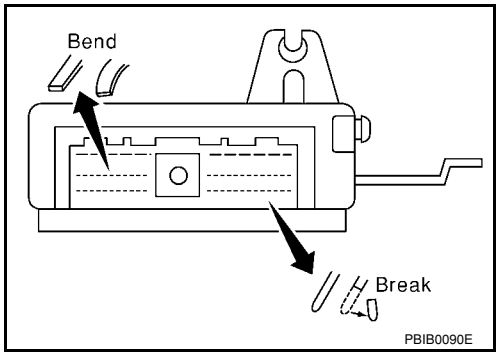

PBIB0090E

- **Before replacing ECM, perform "ECM Terminals and Reference Value" inspection and make sure ECM functions properly. Refer to EC-102, "ECM Terminal and Reference Value".**
- **Handle mass air flow sensor carefully to avoid damage.**
- **Do not disassemble mass air flow sensor.**
- **Do not clean mass air flow sensor with any type of detergent.**
- **Do not disassemble electric throttle control actuator.**
- **Even a slight leak in the air intake system can cause serious incidents.**
- **Do not shock or jar the camshaft position sensor (PHASE), crankshaft position sensor (POS).**
- **After performing each TROUBLE DIAGNOSIS, perform DTC Confirmation Procedure or Overall Function Check.**
  The DTC should not be displayed in the DTC Confirmation Procedure if the repair is completed. The Overall Function Check should be a good result if the repair is completed.

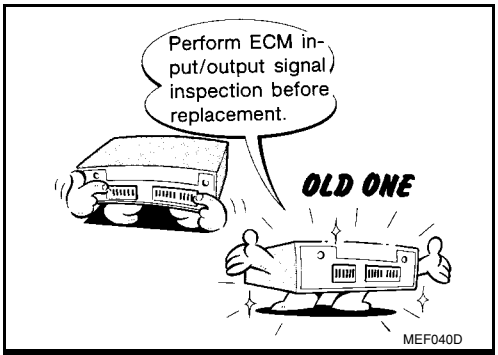

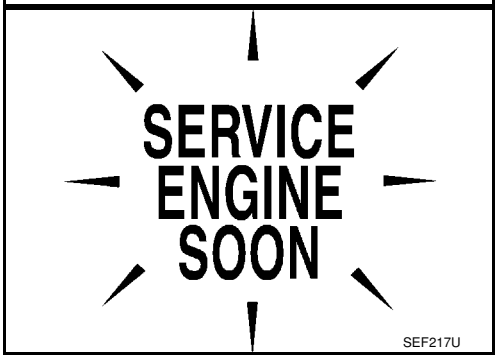

- **When measuring ECM signals with a circuit tester, never allow the two tester probes to contact.**
  Accidental contact of probes will cause a short circuit and damage the ECM power transistor.
- **Do not use ECM ground terminals when measuring input/output voltage. Doing so may result in damage to the ECM's transistor. Use a ground other than ECM terminals, such as the ground.**

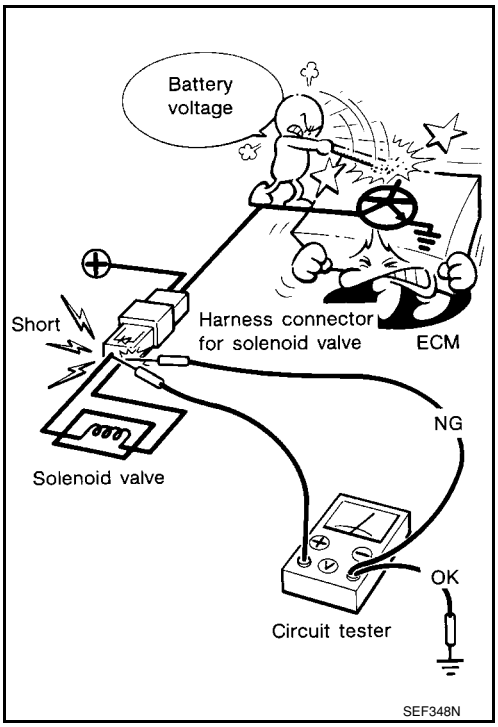

- **Do not operate fuel pump when there is no fuel in lines.**
- **Tighten fuel hose clamps to the specified torque.**
- **Fuel level sensor unit and fuel pump (1)**
- **Fuel pressure regulator (2)**
- **Fuel level sensor (3)**
- **Fuel tank temperature sensor (4)**

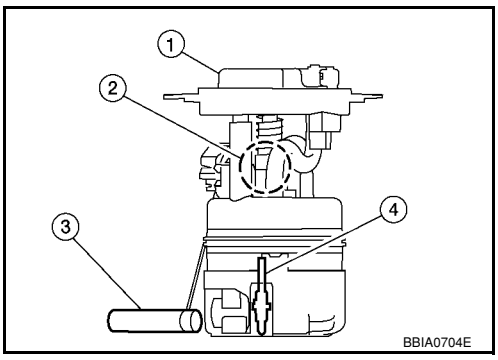

- **Do not depress accelerator pedal when starting.**
- **Immediately after starting, do not rev up engine unnecessarily.**
- **Do not rev up engine just prior to shutdown.**

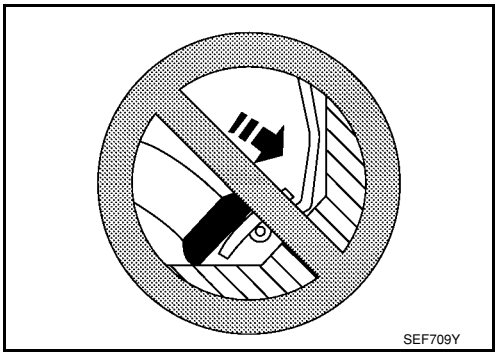

- **When installing C.B. ham radio or a mobile phone, be sure to observe the following as it may adversely affect electronic control systems depending on installation location.**
  - **Keep the antenna as far as possible from the electronic control units.**
  - **Keep the antenna feeder line more than 20 cm (8 in) away from the harness of electronic controls.**
    Do not let them run parallel for a long distance.
  - **Adjust the antenna and feeder line so that the standing-wave radio can be kept smaller.**
  - **Be sure to ground the radio to vehicle body.**

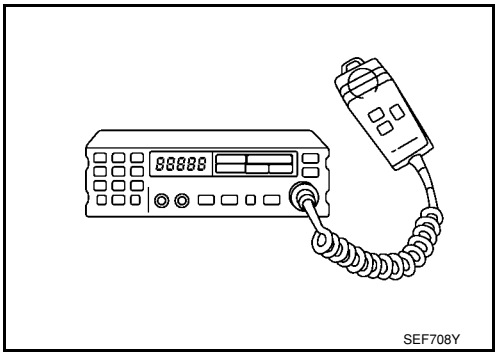

PREPARATION

Special Service Tool

INFOID:0000000001702552

The actual shapes of Kent-Moore tools may differ from those of special service tools illustrated here.

Tool number (Kent-Moore No.) Tool name		Description
KV10117100 (J-36471-A) Heated oxygen sensor wrench	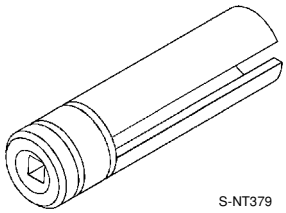 S-NT379	Loosening or tightening heated oxygen sensor with 22 mm (0.87 in) hexagon nut
KV10114400 (J-38365) Heated oxygen sensor wrench	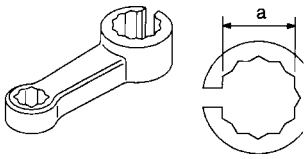 S-NT636	Loosening or tightening heated oxygen sensor **a: 22 mm (0.87 in)**
(J-44321) Fuel pressure gauge Kit	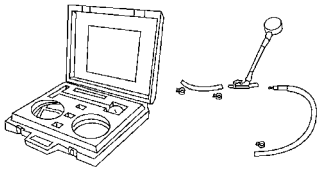 LEC642	Checking fuel pressure
(J-44321-6) Fuel pressure adapter	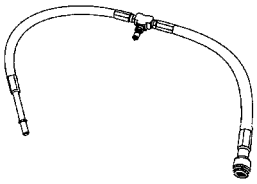 LBIA0376E	Connecting fuel pressure gauge to quick connector type fuel lines.
KV10118400 Fuel tube adapter	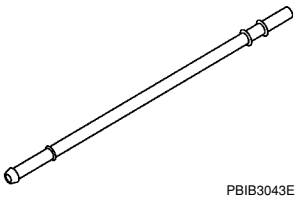 PBIB3043E	Measuring fuel pressure

Commercial Service Tool

INFOID:0000000001702553

Tool number (Kent-Moore No.) Tool name	Description
Leak detector i.e.: (J-41416) 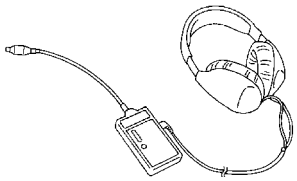 S-NT703	Locating the EVAP leak
EVAP service port adapter i.e.: (J-41413-OBD) 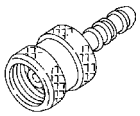 S-NT704	Applying positive pressure through EVAP service port
Fuel filler cap adapter i.e.: (MLR-8382) S-NT815	Checking fuel tank vacuum relief valve opening pressure
Socket wrench 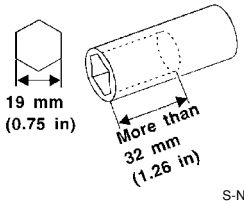 S-NT705	Removing and installing engine coolant temperature sensor
Oxygen sensor thread cleaner i.e.: (J-43897-18) (J-43897-12)	Reconditioning the exhaust system threads before installing a new oxygen sensor. Use with anti-seize lubricant shown below. **a: 18 mm diameter with pitch 1.5 mm for Zirconia Oxygen Sensor** **b: 12 mm diameter with pitch 1.25 mm for Titania Oxygen Sensor**
Anti-seize lubricant i.e.: (Permatex™ 133AR or equivalent meeting MIL specification MIL-A-907)	Lubricating oxygen sensor thread cleaning tool when reconditioning exhaust system threads.

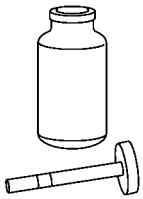
S-NT779

ENGINE CONTROL SYSTEM

Schematic

INFOID:0000000001702554

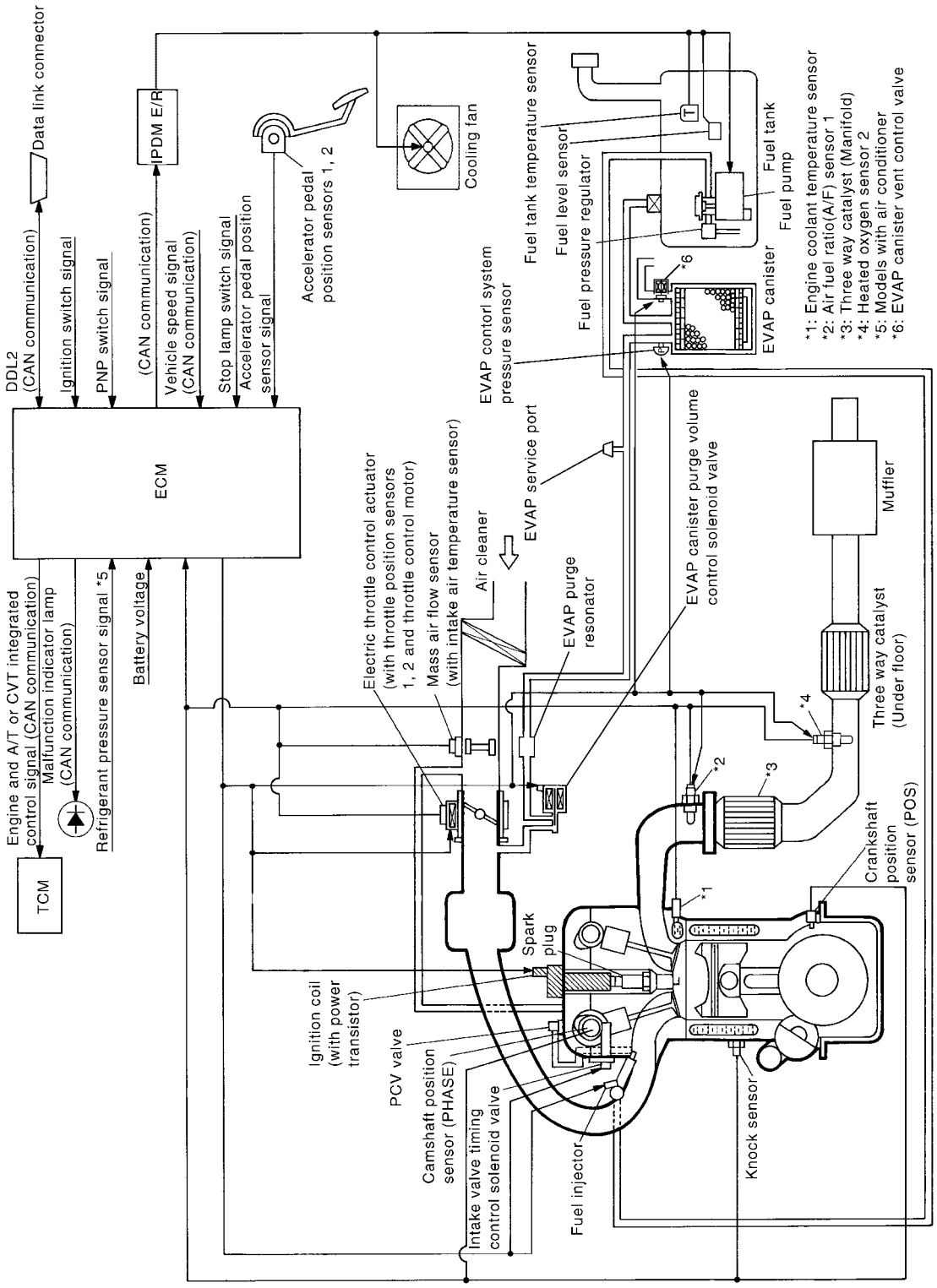

PBIB3331E

Multiport Fuel Injection (MFI) System

INFOID:0000000001702555

INPUT/OUTPUT SIGNAL CHART

Sensor	Input Signal to ECM	ECM function	Actuator
Crankshaft position sensor (POS)	Engine speed*3 Piston position	Fuel injection & mixture ratio control	Fuel injector
Camshaft position sensor (PHASE)			
Mass air flow sensor	Amount of intake air		
Engine coolant temperature sensor	Engine coolant temperature		
Air fuel ratio (A/F) sensor 1	Density of oxygen in exhaust gas		
Throttle position sensor	Throttle position		
Accelerator pedal position sensor	Accelerator pedal position		
Park/neutral position (PNP) switch	Gear position		
Battery	Battery voltage*3		
Knock sensor	Engine knocking condition		
EPS control unit	Power steering operation*2		
Heated oxygen sensor 2*1	Density of oxygen in exhaust gas		
Air conditioner switch	Air conditioner operation*2		
Wheel sensor	Vehicle speed*2		

*1: This sensor is not used to control the engine system under normal conditions.

*2: This signal is sent to the ECM through CAN communication line.

*3: ECM determines the start signal status by the signals of engine speed and battery voltage.

SYSTEM DESCRIPTION

The amount of fuel injected from the fuel injector is determined by the ECM. The ECM controls the length of time the valve remains open (injection pulse duration). The amount of fuel injected is a program value in the ECM memory. The program value is preset by engine operating conditions. These conditions are determined by input signals (for engine speed and intake air) from the crankshaft position sensor (POS), camshaft position sensor (PHASE) and the mass air flow sensor.

VARIOUS FUEL INJECTION INCREASE/DECREASE COMPENSATION

In addition, the amount of fuel injected is compensated to improve engine performance under various operating conditions as listed below.

<Fuel increase>
- During warm-up
- When starting the engine
- During acceleration
- Hot-engine operation
- When selector lever is changed from N to D (A/T and CVT models)
- High-load, high-speed operation

<Fuel decrease>
- During deceleration
- During high engine speed operation

MIXTURE RATIO FEEDBACK CONTROL (CLOSED LOOP CONTROL)

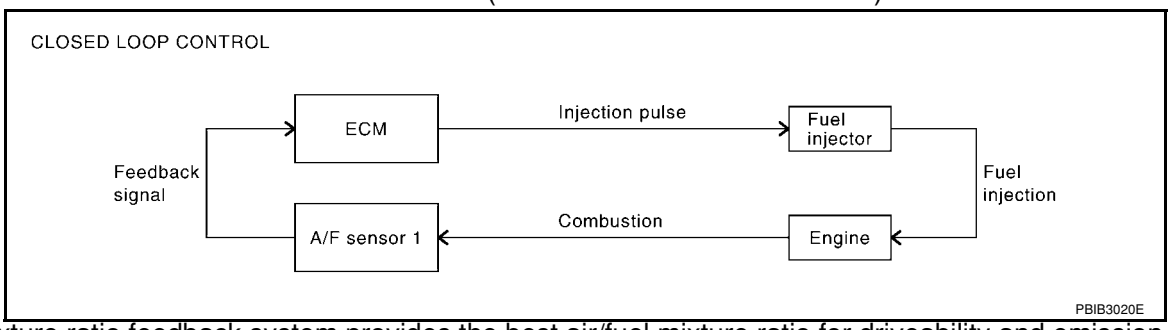

The mixture ratio feedback system provides the best air/fuel mixture ratio for driveability and emission control. The three way catalyst (manifold) can then better reduce CO, HC and NOx emissions. This system uses air

fuel ratio (A/F) sensor 1 in the exhaust manifold to monitor whether the engine operation is rich or lean. The ECM adjusts the injection pulse width according to the sensor voltage signal. For more information about air fuel ratio (A/F) sensor 1, refer to EC-213. This maintains the mixture ratio within the range of stoichiometric (ideal air/fuel mixture).
This stage is referred to as the closed loop control condition.
Heated oxygen sensor 2 is located downstream of the three way catalyst (manifold). Even if the switching characteristics of air fuel ratio (A/F) sensor 1 shift, the air/fuel ratio is controlled to stoichiometric by the signal from heated oxygen sensor 2.

Open Loop Control
The open loop system condition refers to when the ECM detects any of the following conditions. Feedback control stops in order to maintain stabilized fuel combustion.
- Deceleration and acceleration
- High-load, high-speed operation
- Malfunction of air fuel ratio (A/F) sensor 1 or its circuit
- Insufficient activation of air fuel ratio (A/F) sensor 1 at low engine coolant temperature
- High engine coolant temperature
- During warm-up
- After shifting from N to D (A/T and CVT models)
- When starting the engine

MIXTURE RATIO SELF-LEARNING CONTROL
The mixture ratio feedback control system monitors the mixture ratio signal transmitted from air fuel ratio (A/F) sensor 1. This feedback signal is then sent to the ECM. The ECM controls the basic mixture ratio as close to the theoretical mixture ratio as possible. However, the basic mixture ratio is not necessarily controlled as originally designed. Both manufacturing differences (i.e., mass air flow sensor hot wire) and characteristic changes during operation (i.e., fuel injector clogging) directly affect mixture ratio.
Accordingly, the difference between the basic and theoretical mixture ratios is monitored in this system. This is then computed in terms of “injection pulse duration” to automatically compensate for the difference between the two ratios.
“Fuel trim” refers to the feedback compensation value compared against the basic injection duration. Fuel trim includes short term fuel trim and long term fuel trim.
“Short term fuel trim” is the short-term fuel compensation used to maintain the mixture ratio at its theoretical value. The signal from air fuel ratio (A/F) sensor 1 indicates whether the mixture ratio is RICH or LEAN compared to the theoretical value. The signal then triggers a reduction in fuel volume if the mixture ratio is rich, and an increase in fuel volume if it is lean.
“Long term fuel trim” is overall fuel compensation carried out long-term to compensate for continual deviation of the short term fuel trim from the central value. Such deviation will occur due to individual engine differences, wear over time and changes in the usage environment.

FUEL INJECTION TIMING
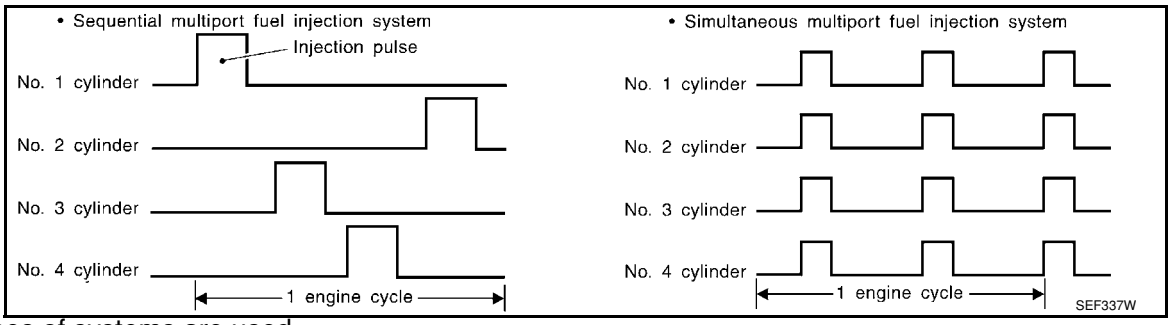

Two types of systems are used.

Sequential Multiport Fuel Injection System
Fuel is injected into each cylinder during each engine cycle according to the firing order. This system is used when the engine is running.

Simultaneous Multiport Fuel Injection System
Fuel is injected simultaneously into all four cylinders twice each engine cycle. In other words, pulse signals of the same width are simultaneously transmitted from the ECM.
The four fuel injectors will then receive the signals two times for each engine cycle.
This system is used when the engine is being started and/or if the fail-safe system (CPU) is operating.

FUEL SHUT-OFF

Fuel to each cylinder is cut off during deceleration, operation of the engine at excessively high speeds or operation of the vehicle at excessively high speeds.

Electronic Ignition (EI) System

INFOID:0000000001702556

INPUT/OUTPUT SIGNAL CHART

Sensor	Input Signal to ECM	ECM function	Actuator
Crankshaft position sensor (POS)	Engine speed*2 Piston position	Ignition timing control	Power transistor
Camshaft position sensor (PHASE)			
Mass air flow sensor	Amount of intake air		
Engine coolant temperature sensor	Engine coolant temperature		
Throttle position sensor	Throttle position		
Accelerator pedal position sensor	Accelerator pedal position		
Battery	Battery voltage*2		
Knock sensor	Engine knocking		
Park/neutral position (PNP) switch	Gear position		
Wheel sensor	Vehicle speed*1		

*1: This signal is sent to the ECM through CAN communication line.

*2: ECM determines the start signal status by the signals of engine speed and battery voltage.

SYSTEM DESCRIPTION

Firing order: 1 - 3 - 4 - 2

The ignition timing is controlled by the ECM to maintain the best air-fuel ratio for every running condition of the engine. The ignition timing data is stored in the ECM.

The ECM receives information such as the injection pulse width and camshaft position sensor (PHASE) signal. Computing this information, ignition signals are transmitted to the power transistor.

During the following conditions, the ignition timing is revised by the ECM according to the other data stored in the ECM.

- At starting
- During warm-up
- At idle
- At low battery voltage
- During acceleration

The knock sensor retard system is designed only for emergencies. The basic ignition timing is programmed within the anti-knocking zone, if recommended fuel is used under dry conditions. The retard system does not operate under normal driving conditions. If engine knocking occurs, the knock sensor monitors the condition. The signal is transmitted to the ECM. The ECM retards the ignition timing to eliminate the knocking condition.

Fuel Cut Control (at No Load and High Engine Speed)

INFOID:0000000001702557

INPUT/OUTPUT SIGNAL CHART

Sensor	Input Signal to ECM	ECM function	Actuator
Park/neutral position (PNP) switch	Neutral position	Fuel cut control	Fuel injector
Accelerator pedal position sensor	Accelerator pedal position		
Engine coolant temperature sensor	Engine coolant temperature		
Crankshaft position sensor (POS) Camshaft position sensor (PHASE)	Engine speed		
Wheel sensor	Vehicle speed*		

*: This signal is sent to the ECM through CAN communication line.

SYSTEM DESCRIPTION

If the engine speed is above 2,000 rpm under no load [for example, the shift lever position is P or N (A/T, CVT), Neutral (M/T) and engine speed is over 2,000 rpm] fuel will be cut off after some time. The exact time when the fuel is cut off varies based on engine speed.
Fuel cut will be operated until the engine speed reaches 1,500 rpm, then fuel cut will be cancelled.
NOTE:
This function is different from deceleration control listed under EC-22, "Multiport Fuel Injection (MFI) System".

AIR CONDITIONING CUT CONTROL

Input/Output Signal Chart

INFOID:0000000001702558

Sensor	Input Signal to ECM	ECM function	Actuator
Air conditioner switch	Air conditioner ON signal*1	Air conditioner cut control	Air conditioner relay
Accelerator pedal position sensor	Accelerator pedal position		
Crankshaft position sensor (POS) Camshaft position sensor (PHASE)	Engine speed*2		
Engine coolant temperature sensor	Engine coolant temperature		
Battery	Battery voltage*2		
Refrigerant pressure sensor	Refrigerant pressure		
EPS control unit	Power steering operation*1		
Wheel sensor	Vehicle speed*1		

*1: This signal is sent to the ECM through CAN communication line.

*2: ECM determines the start signal status by the signals of engine speed and battery voltage.

System Description

INFOID:0000000001702559

This system improves engine operation when the air conditioner is used.
Under the following conditions, the air conditioner is turned off.

- When the accelerator pedal is fully depressed.
- When cranking the engine.
- At high engine speeds.
- When the engine coolant temperature becomes excessively high.
- When operating power steering during low engine speed or low vehicle speed.
- When engine speed is excessively low.
- When refrigerant pressure is excessively low or high.

AUTOMATIC SPEED CONTROL DEVICE (ASCD)

System Description

INFOID:0000000001702560

INPUT/OUTPUT SIGNAL CHART

Sensor	Input signal to ECM	ECM function	Actuator
ASCD brake switch	Brake pedal operation	ASCD vehicle speed control	Electric throttle control actuator
Stop lamp switch	Brake pedal operation		
ASCD clutch switch (M/T models)	Clutch pedal operation		
ASCD steering switch	ASCD steering switch operation		
Park/neutral position (PNP) switch	Gear position		
Combination meter	Vehicle speed*		
TCM (A/T and CVT models)	Powertrain revolution*		

*: This signal is sent to the ECM through CAN communication line.

BASIC ASCD SYSTEM

Refer to Owner's Manual for ASCD operating instructions.
Automatic Speed Control Device (ASCD) allows a driver to keep vehicle at predetermined constant speed without depressing accelerator pedal. Driver can set vehicle speed in advance between approximately 40 km/h (25 MPH) and 144 km/h (89 MPH).
ECM controls throttle angle of electric throttle control actuator to regulate engine speed.
Operation status of ASCD is indicated by CRUISE indicator and SET indicator in combination meter. If any malfunction occurs in ASCD system, it automatically deactivates control.
NOTE:
Always drive vehicle in safe manner according to traffic conditions and obey all traffic laws.

SET OPERATION

Press MAIN switch. (The CRUISE indicator in combination meter illuminates.)
When vehicle speed reaches a desired speed between approximately 40 km/h (25 MPH) and 144 km/h (89 MPH), press SET/COAST switch. (Then SET indicator in combination meter illuminates.)

ACCELERATE OPERATION

If the RESUME/ACCELERATE switch is depressed during cruise control driving, increase the vehicle speed until the switch is released or vehicle speed reaches maximum speed controlled by the system.
And then ASCD will keep the new set speed.

CANCEL OPERATION

When any of following conditions exist, cruise operation will be canceled.
- CANCEL switch is pressed
- More than two switches at ASCD steering switch are pressed at the same time (Set speed will be cleared)
- Brake pedal is depressed
- Clutch pedal is depressed or gear position is changed to the neutral position (M/T models)
- Selector lever is changed to N, P, R position (A/T and CVT models)
- Vehicle speed decreased to 13 km/h (8 MPH) lower than the set speed

When the ECM detects any of the following conditions, the ECM will cancel the cruise operation and inform the driver by blinking indicator lamp.
- Engine coolant temperature is slightly higher than the normal operating temperature, CRUISE lamp may blink slowly.
  When the engine coolant temperature decreases to the normal operating temperature, CRUISE lamp will stop blinking and the cruise operation will be able to work by pressing SET/COAST switch or RESUME/ACCELERATE switch.
- Malfunction for some self-diagnoses regarding ASCD control: SET lamp will blink quickly.

If MAIN switch is turned to OFF during ASCD is activated, all of ASCD operations will be canceled and vehicle speed memory will be erased.

COAST OPERATION

When the SET/COAST switch is depressed during cruise control driving, decrease vehicle set speed until the switch is released. And then ASCD will keep the new set speed.

RESUME OPERATION

When the RESUME/ACCELERATE switch is depressed after cancel operation other than depressing MAIN switch is performed, vehicle speed will return to last set speed. To resume vehicle set speed, vehicle condition must meet following conditions.

- Brake pedal is released.
- Clutch pedal is released (M/T models)
- Selector lever is in other than P and N positions (A/T and CVT models)
- Vehicle speed is greater than 40 km/h (25 MPH) and less than 144 km/h (89 MPH)

Component Description

INFOID:0000000001702561

ASCD STEERING SWITCH

Refer to EC-432.

ASCD BRAKE SWITCH

Refer to EC-438 and EC-508.

ASCD CLUTCH SWITCH

Refer to EC-438 and EC-508.

STOP LAMP SWITCH

Refer to EC-438, EC-452and EC-508.

ELECTRIC THROTTLE CONTROL ACTUATOR

Refer to EC-456, EC-461, EC-467and EC-472.

ASCD INDICATOR

Refer to EC-516.

CAN COMMUNICATION

System Description

INFOID:0000000001702562

CAN (Controller Area Network) is a serial communication line for real time application. It is an on-vehicle multiplex communication line with high data communication speed and excellent error detection ability. Many electronic control units are equipped onto a vehicle, and each control unit shares information and links with other control units during operation (not independent). In CAN communication, control units are connected with 2 communication lines (CAN H line, CAN L line) allowing a high rate of information transmission with less wiring. Each control unit transmits/receives data but selectively reads required data only.
Refer to LAN-23, "CAN System Specification Chart", about CAN communication for detail.

EVAPORATIVE EMISSION SYSTEM

Description

INFOID:0000000001702563

SYSTEM DESCRIPTION

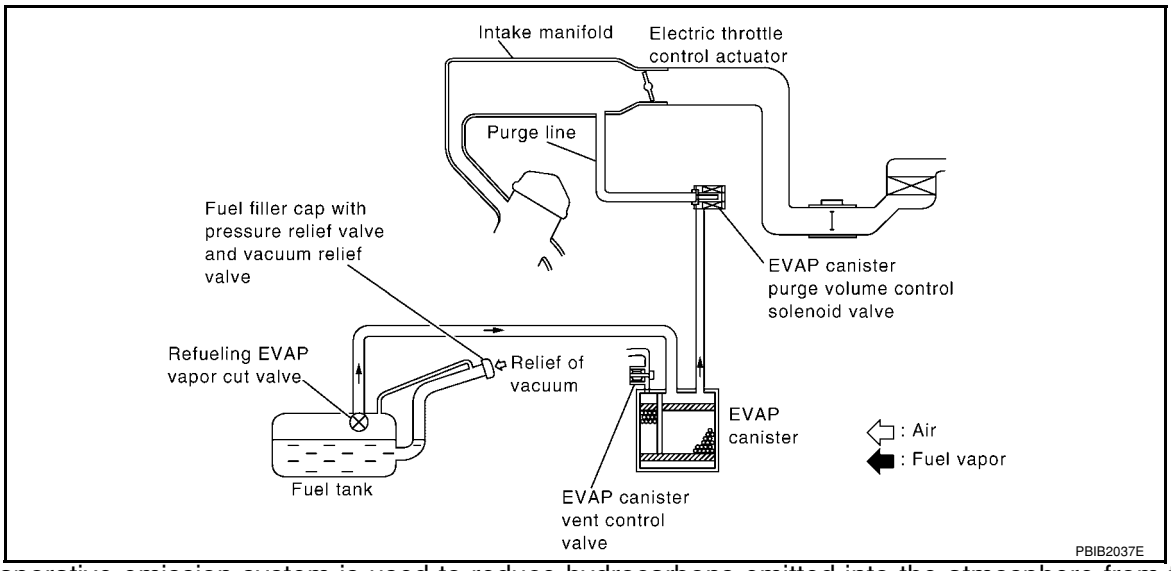

The evaporative emission system is used to reduce hydrocarbons emitted into the atmosphere from the fuel system. This reduction of hydrocarbons is accomplished by activated charcoals in the EVAP canister.
The fuel vapor in the sealed fuel tank is led into the EVAP canister which contains activated carbon and the vapor is stored there when the engine is not operating or when refueling to the fuel tank.
The vapor in the EVAP canister is purged by the air through the purge line to the intake manifold when the engine is operating. EVAP canister purge volume control solenoid valve is controlled by ECM. When the engine operates, the flow rate of vapor controlled by EVAP canister purge volume control solenoid valve is proportionally regulated as the air flow increases.
EVAP canister purge volume control solenoid valve also shuts off the vapor purge line during decelerating and idling.

EVAPORATIVE EMISSION LINE DRAWING

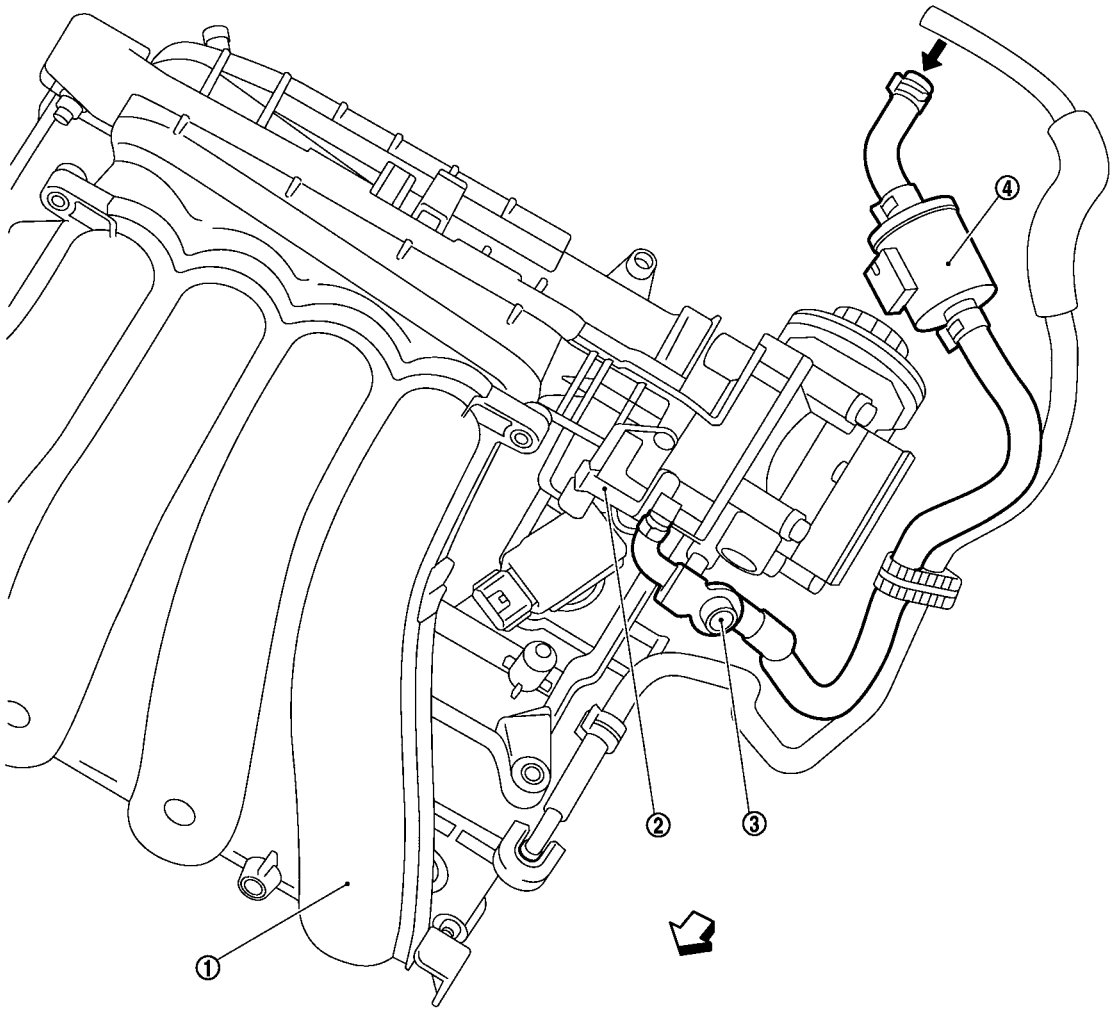

PBIB3330E

⇦: Vehicle front

⬅: From next page

1. Intake manifold collector
2. EVAP canister purge volume control solenoid valve
3. EVAP service port
4. EVAP purge resonator

NOTE: Do not use soapy water or any type of solvent while installing vacuum hose or purge hoses.

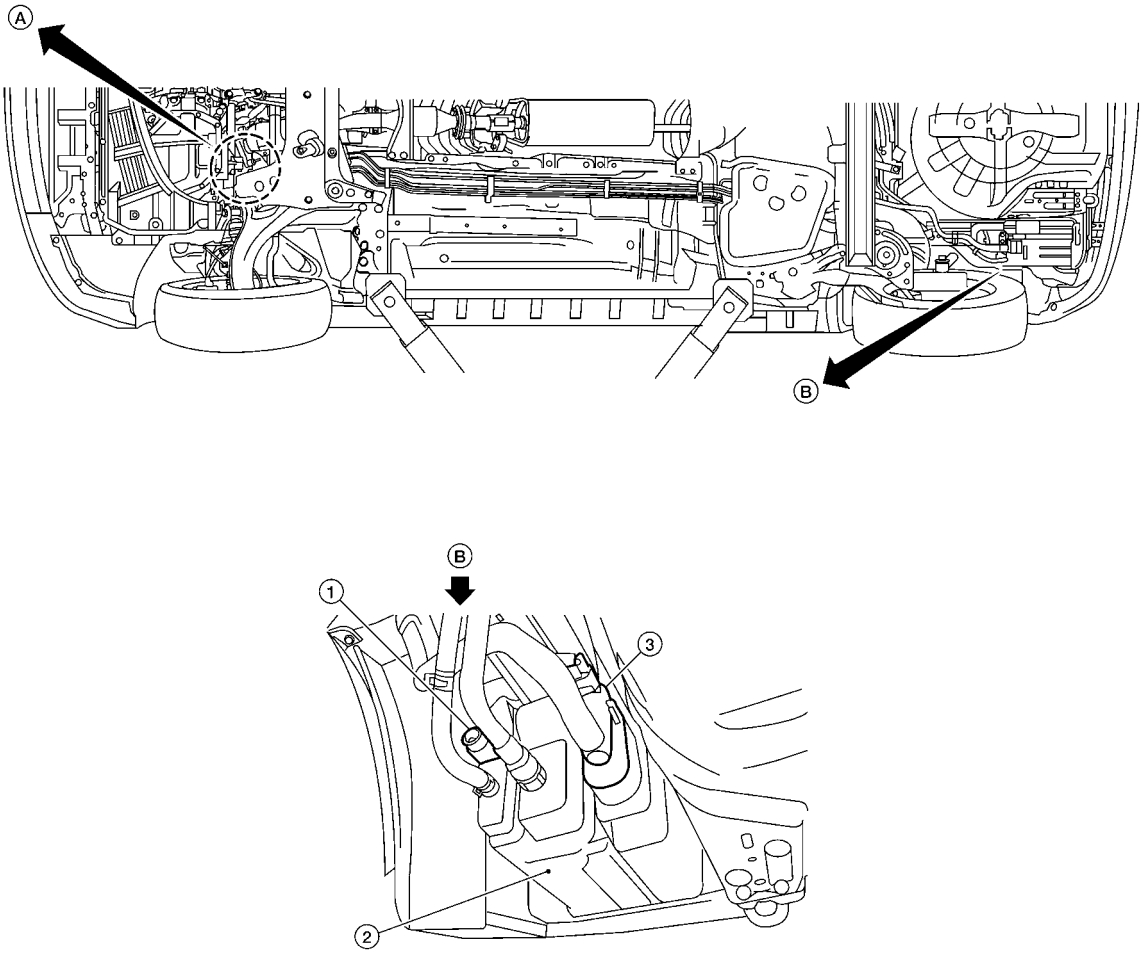

BBIA0692E

⬅: To previous page

1. EVAP control system pressure sensor 2. EVAP canister 3. EVAP canister vent control valve

NOTE: Do not use soapy water or any type of solvent while installing vacuum hose or purge hoses.

Component Inspection

INFOID:0000000001702564

EVAP CANISTER

Check EVAP canister as follows:

1. Block port **B**.
2. Blow air into port **A**and check that it flows freely out of port **C**.
3. Release blocked port **B**.
4. Apply vacuum pressure to port **B**and check that vacuum pressure exists at the ports **A** and **C**.
5. Block port **A** and **B**.
6. Apply pressure to port **C**and check that there is no leakage.

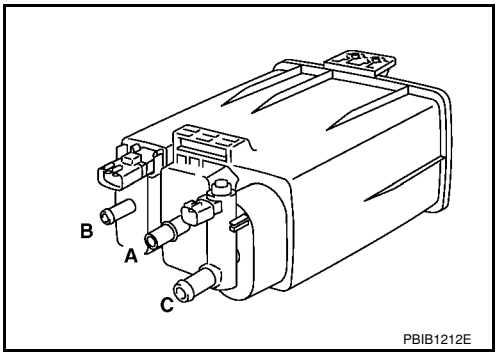

FUEL TANK VACUUM RELIEF VALVE (BUILT INTO FUEL FILLER CAP)

1. Wipe clean valve housing.

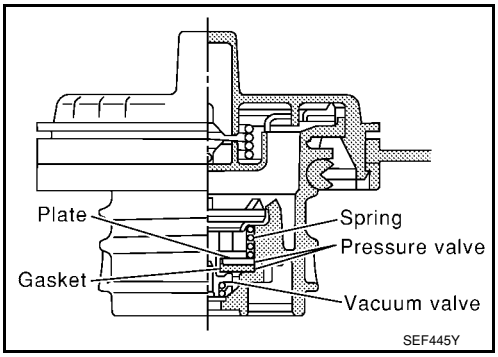

2. Check valve opening pressure and vacuum.

Pressure: **15.3 - 20.0 kPa**
(0.156 - 0.204 kg/cm^2, 2.22 - 2.90 psi)
Vacuum: **–6.0 to –3.4 kPa**
(–0.061 to –0.035 kg/cm^2, –0.87 to –0.48 psi)

3. If out of specification, replace fuel filler cap as an assembly.

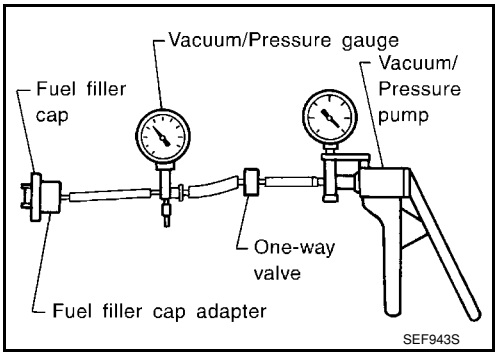

CAUTION:
Use only a genuine fuel filler cap as a replacement. If an incorrect fuel filler cap is used, the MIL may come on.

EVAP CANISTER PURGE VOLUME CONTROL SOLENOID VALVE

Refer to EC-337, "Component Inspection".

FUEL TANK TEMPERATURE SENSOR

Refer to EC-277, "Component Inspection".

EVAP CANISTER VENT CONTROL VALVE

Refer to EC-343, "Component Inspection".

EVAP CONTROL SYSTEM PRESSURE SENSOR

Refer to EC-361, "Component Inspection".

EVAP SERVICE PORT

Positive pressure is delivered to the EVAP system through the EVAP service port. If fuel vapor leakage in the EVAP system occurs, use a leak detector to locate the leak.

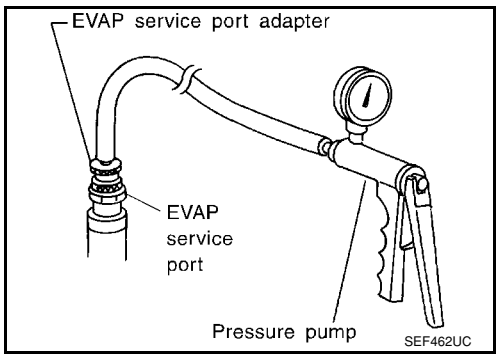

Removal and Installation

INFOID:0000000001702565

EVAP CANISTER

Tighten EVAP canister as shown in the figure.

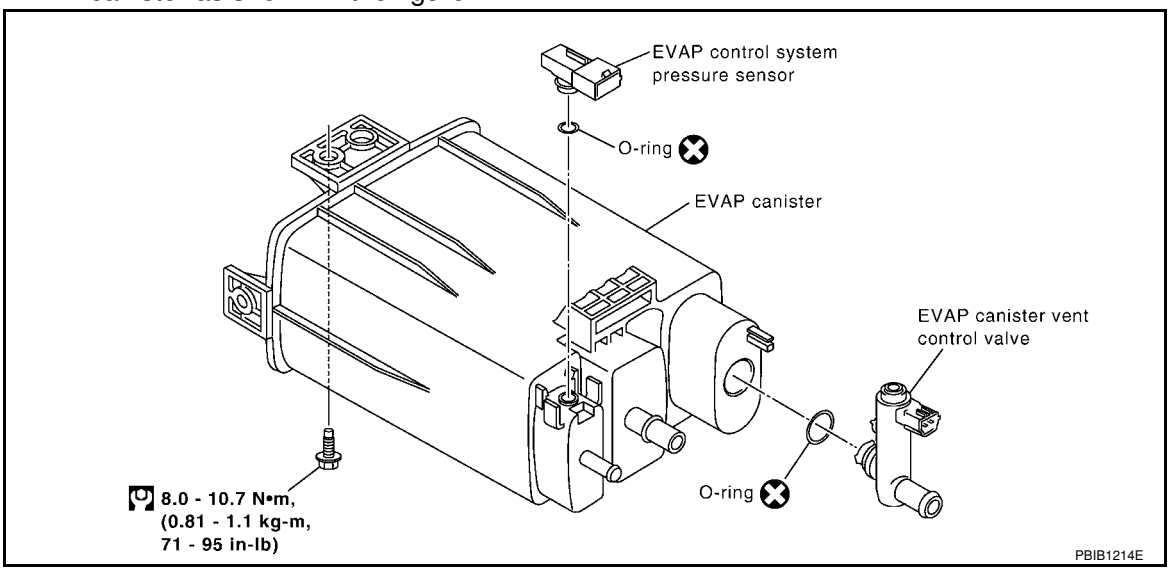

EVAP CANISTER VENT CONTROL VALVE

1. Turn EVAP canister vent control valve counterclockwise.
- Lock (A)
- Unlock (B)
2. Remove the EVAP canister vent control valve.

Always replace O-ring with a new one.

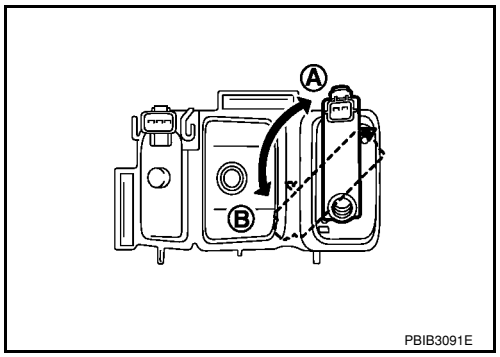

How to Detect Fuel Vapor Leakage

INFOID:0000000001702566

CAUTION:
- **Never use compressed air or a high pressure pump.**
- **Do not exceed 4.12 kPa (0.042 kg/cm^2, 0.6 psi) of pressure in EVAP system.**

NOTE:
- Do not start engine.
- Improper installation of EVAP service port adapter to the EVAP service port may cause a leak.

WITH CONSULT-II

1. Attach the EVAP service port adapter securely to the EVAP service port.
2. Also attach the pressure pump and hose to the EVAP service port adapter.

3. Turn ignition switch ON.
4. Select the “EVAP SYSTEM CLOSE” of “WORK SUPPORT” mode with CONSULT-II.
5. Touch “START”. A bar graph (Pressure indicating display) will appear on the screen.

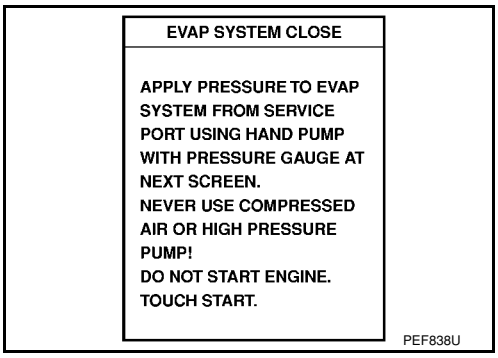

6. Apply positive pressure to the EVAP system until the pressure indicator reaches the middle of the bar graph.
7. Remove EVAP service port adapter and hose with pressure pump.

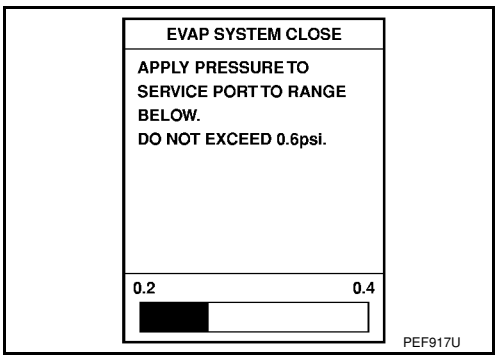

8. Locate the leak using a leak detector. Refer to EC-31, "Description".

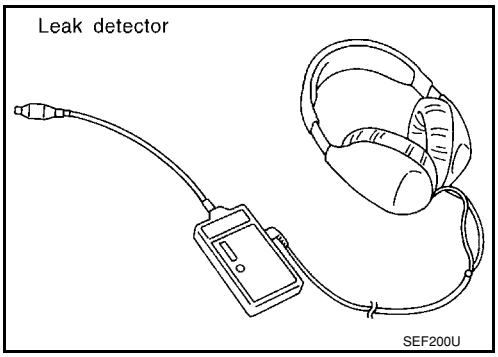

WITHOUT CONSULT-II

1. Attach the EVAP service port adapter securely to the EVAP service port.
2. Also attach the pressure pump with pressure gauge to the EVAP service port adapter.

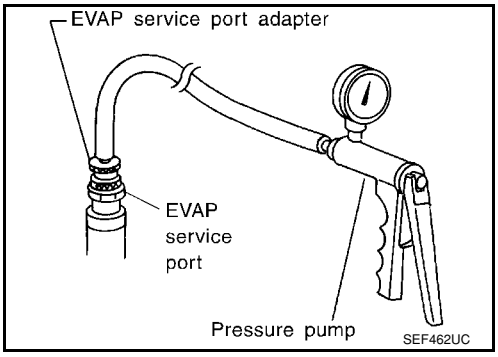

3. Apply battery voltage to the terminal of EVAP canister vent control valve (3) to make a closed EVAP system.
   - EVAP control system pressure sensor (1)
   - EVAP canister (2)

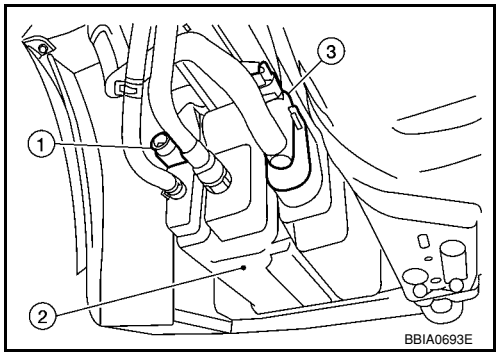

4. To locate the leak, deliver positive pressure to the EVAP system until pressure gauge points reach 1.38 to 2.76 kPa (0.014 to 0.028 kg/cm^2, 0.2 to 0.4 psi).
5. Remove EVAP service port adapter and hose with pressure pump.
6. Locate the leak using a leak detector. Refer to EC-31, "Description".

ON BOARD REFUELING VAPOR RECOVERY (ORVR)

System Description

INFOID:0000000001702567

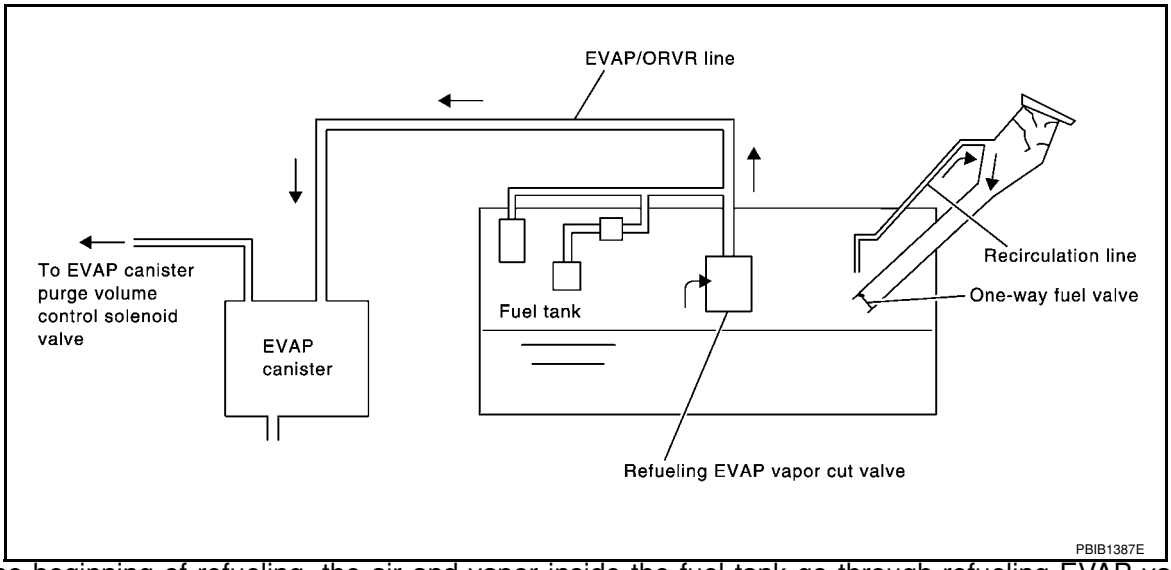

From the beginning of refueling, the air and vapor inside the fuel tank go through refueling EVAP vapor cut valve and EVAP/ORVR line to the EVAP canister. The vapor is absorbed by the EVAP canister and the air is released to the atmosphere.
When the refueling has reached the full level of the fuel tank, the refueling EVAP vapor cut valve is closed and refueling is stopped because of auto shut-off. The vapor which was absorbed by the EVAP canister is purged during driving.

WARNING:
When conducting inspections below, be sure to observe the following:
- **Put a "CAUTION: FLAMMABLE" sign in workshop.**
- **Do not smoke while servicing fuel system. Keep open flames and sparks away from work area.**
- **Be sure to furnish the workshop with a CO_2 fire extinguisher.**

CAUTION:
- **Before removing fuel line parts, carry out the following procedures:**
- **Put drained fuel in an explosion-proof container and put lid on securely.**
- **Release fuel pressure from fuel line. Refer to EC-78, "Fuel Pressure Check".**
- **Disconnect negative battery cable.**
- **Always replace O-ring when the fuel gauge retainer is removed.**
- **Do not kink or twist hose and tube when they are installed.**
- **Do not tighten hose and clamps excessively to avoid damaging hoses.**
- **After installation, run engine and check for fuel leaks at connection.**
- **Do not attempt to top off the fuel tank after the fuel pump nozzle shuts off automatically. Continued refueling may cause fuel overflow, resulting in fuel spray and possibly a fire.**

Diagnosis Procedure

INFOID:0000000001702568

SYMPTOM: FUEL ODOR FROM EVAP CANISTER IS STRONG.

1. CHECK EVAP CANISTER

1. Remove EVAP canister with EVAP canister vent control valve and EVAP control system pressure sensor attached.
2. Weigh the EVAP canister with EVAP canister vent control valve and EVAP control system pressure sensor attached.
   The weight should be less than 1.9 kg (4.2 lb).

OK or NG

OK >> GO TO 2.
NG >> GO TO 3.

2. CHECK IF EVAP CANISTER SATURATED WITH WATER

Does water drain from the EVAP canister?

Yes or No

Yes >> GO TO 3.
No >> GO TO 5.

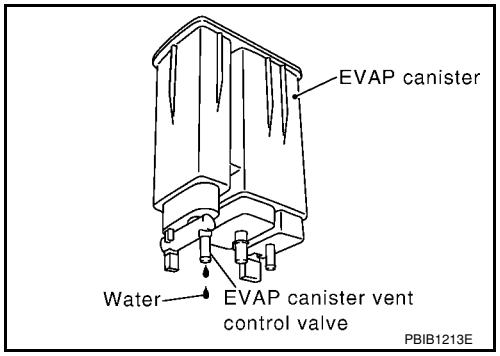

3. REPLACE EVAP CANISTER

Replace EVAP canister with a new one.

>> GO TO 4.

4. DETECT MALFUNCTIONING PART

Check the EVAP hose between EVAP canister and vehicle frame for clogging or poor connection.

>> Repair or replace EVAP hose.

5. CHECK REFUELING EVAP VAPOR CUT VALVE

Refer to EC-40, "Component Inspection".

OK or NG

OK >> **INSPECTION END**
NG >> Replace refueling EVAP vapor cut valve with fuel tank.

SYMPTOM: CANNOT REFUEL/FUEL ODOR FROM THE FUEL FILLER OPENING IS STRONG WHILE REFUELING.

1. CHECK EVAP CANISTER

1. Remove EVAP canister with EVAP canister vent control valve and EVAP control system pressure sensor attached.
2. Weigh the EVAP canister with EVAP canister vent control valve and EVAP control system pressure sensor attached.
   The weight should be less than 1.9 kg (4.2 lb).

OK or NG

OK >> GO TO 2.
NG >> GO TO 3.

2. CHECK IF EVAP CANISTER SATURATED WITH WATER

Does water drain from the EVAP canister?

Yes or No

Yes >> GO TO 3.
No >> GO TO 5.

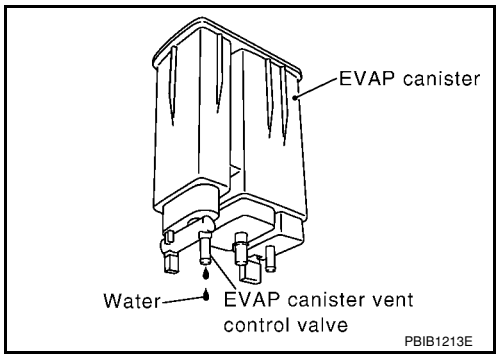

3. REPLACE EVAP CANISTER

Replace EVAP canister with a new one.

>> GO TO 4.

4. DETECT MALFUNCTIONING PART

Check the EVAP hose between EVAP canister and vehicle frame for clogging or poor connection.

>> Repair or replace EVAP hose.

5. CHECK VENT HOSES AND VENT TUBES

Check hoses and tubes between EVAP canister and refueling EVAP vapor cut valve for clogging, kink, looseness and improper connection.

OK or NG

OK >> GO TO 6.
NG >> Repair or replace hoses and tubes.

6. CHECK FILLER NECK TUBE

Check recirculation line for clogging, dents and cracks.

OK or NG

OK >> GO TO 7.
NG >> Replace filler neck tube.

7. CHECK REFUELING EVAP VAPOR CUT VALVE

Refer to EC-40, "Component Inspection".

OK or NG

OK >> GO TO 8.
NG >> Replace refueling EVAP vapor cut valve with fuel tank.

8. CHECK FUEL FILLER TUBE

Check filler neck tube and hose connected to the fuel tank for clogging, dents and cracks.

OK or NG

OK >> GO TO 9.
NG >> Replace fuel filler tube.

9. CHECK ONE-WAY FUEL VALVE-I

Check one-way valve for clogging.

OK or NG

OK >> GO TO 10.
NG >> Repair or replace one-way fuel valve with fuel tank.

10. CHECK ONE-WAY FUEL VALVE-II

1. Make sure that fuel is drained from the tank.
2. Remove fuel filler tube and hose.
3. Check one-way fuel valve for operation as follows.
   When a stick is inserted, the valve should open, when removing stick it should close.
   Do not drop any material into the tank.

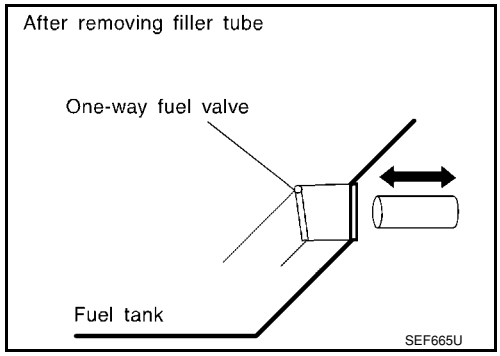

OK or NG

OK >> **INSPECTION END**
NG >> Replace fuel filler tube or replace one-way fuel valve with fuel tank.

Component Inspection

INFOID:0000000001702569

REFUELING EVAP VAPOR CUT VALVE

With CONSULT-II

1. Remove fuel tank. Refer to FL-9.
2. Drain fuel from the tank as follows:
a. Remove fuel feed hose located on the fuel gauge retainer.
b. Connect a spare fuel hose, one side to fuel gauge retainer where the hose was removed and the other side to a fuel container.
c. Drain fuel using “FUEL PUMP RELAY” in “ACTIVE TEST” mode with CONSULT-II.
3. Check refueling EVAP vapor cut valve for being stuck to close as follows.
Blow air into the refueling EVAP vapor cut valve (from the end of EVAP/ORVR line hose), and check that the air flows freely into the tank.
4. Check refueling EVAP vapor cut valve for being stuck to open as follows.
a. Connect vacuum pump to hose end.
b. Remove fuel gauge retainer with fuel gauge unit.
Always replace O-ring with new one.
c. Put fuel tank upside down.
d. Apply vacuum pressure to hose end [–13.3 kPa (–100 mmHg, –3.94 inHg)] with fuel gauge retainer remaining open and check that the pressure is applicable.

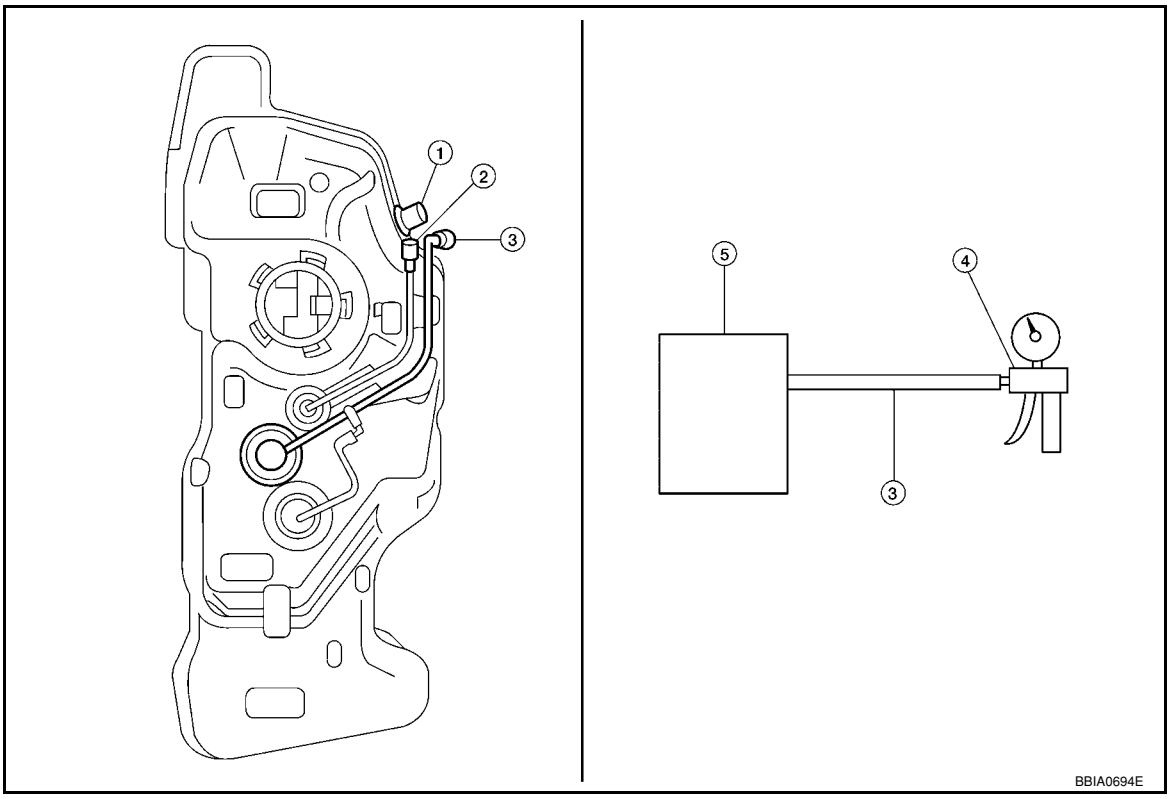

1. Filler tube
2. Recirculation line
3. EVAP/ORVR line
4. Vacuum/pressure handy pump
5. Fuel tank

Without CONSULT-II
1. Remove fuel tank. Refer to FL-9.
2. Drain fuel from the tank as follows:
a. Remove fuel gauge retainer.
b. Drain fuel from the tank using a handy pump into a fuel container.
3. Check refueling EVAP vapor cut valve for being stuck to close as follows.
Blow air into the refueling EVAP vapor cut valve (from the end of EVAP/ORVR line hose), and check that the air flows freely into the tank.
4. Check refueling EVAP vapor cut valve for being stuck to open as follows.
a. Connect vacuum pump to hose end.

b. Remove fuel gauge retainer with fuel gauge unit.
Always replace O-ring with new one.

c. Put fuel tank upside down.

d. Apply vacuum pressure to hose end [–13.3 kPa (–100 mmHg, –3.94 inHg)] with fuel gauge retainer remaining open and check that the pressure is applicable.

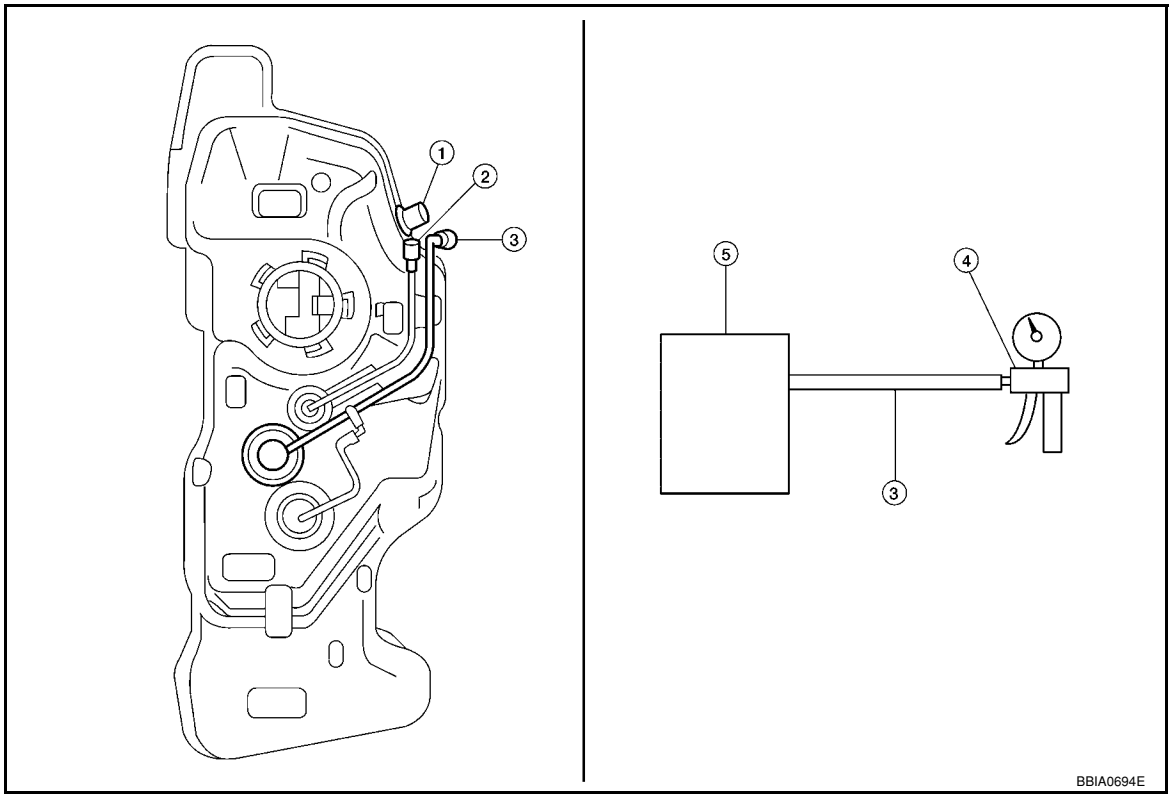

1. Filler tube
2. Recirculation line
3. EVAP/ORVR line
4. Vacuum/pressure handy pump
5. Fuel tank

POSITIVE CRANKCASE VENTILATION

Description

INFOID:0000000001702570

SYSTEM DESCRIPTION

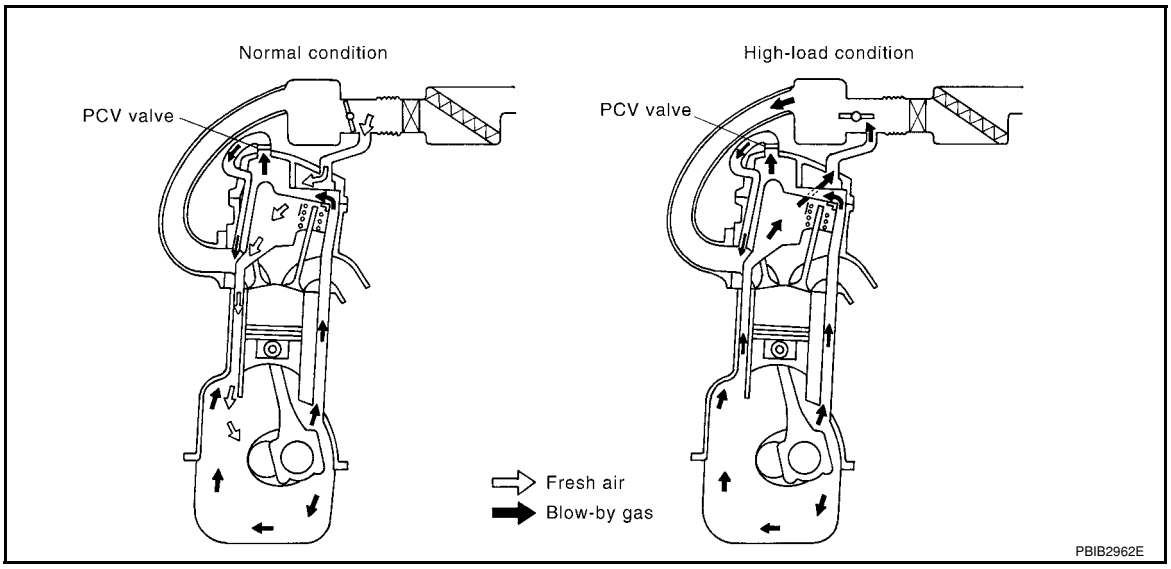

This system returns blow-by gas to the intake manifold.
The positive crankcase ventilation (PCV) valve is provided to conduct crankcase blow-by gas to the intake manifold. During partial throttle operation of the engine, the intake manifold sucks the blow-by gas through the PCV valve. Normally, the capacity of the valve is sufficient to handle any blow-by and a small amount of ventilating air. The ventilating air is then drawn from the air inlet tubes into the crankcase. In this process the air passes through the hose connecting air inlet tubes to rocker cover.
Under full-throttle condition, the manifold vacuum is insufficient to draw the blow-by flow through the valve. The flow goes through the hose connection in the reverse direction.
On vehicles with an excessively high blow-by, the valve does not meet the requirement. This is because some of the flow will go through the hose connection to the air inlet tubes under all conditions.

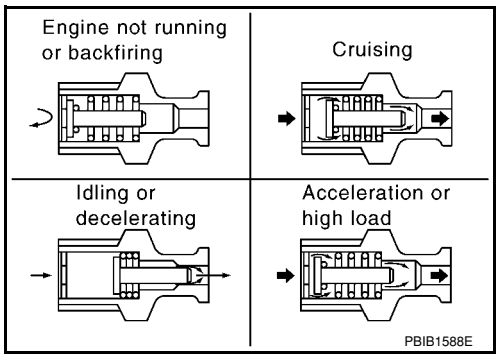

Component Inspection

INFOID:0000000001702571

PCV (POSITIVE CRANKCASE VENTILATION) VALVE

With engine running at idle, remove PCV valve from rocker cover. A properly working valve makes a hissing noise as air passes through it. A strong vacuum should be felt immediately when a finger is placed over valve inlet.

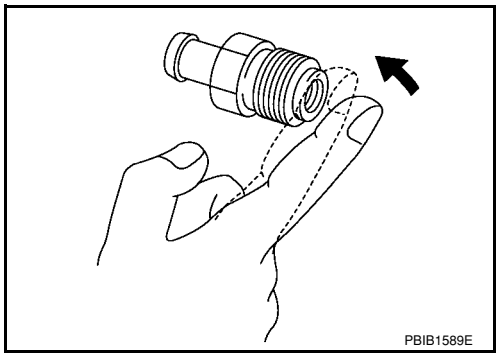

PCV VALVE VENTILATION HOSE

1. Check hoses and hose connections for leaks.
2. Disconnect all hoses and clean with compressed air. If any hose cannot be freed of obstructions, replace.

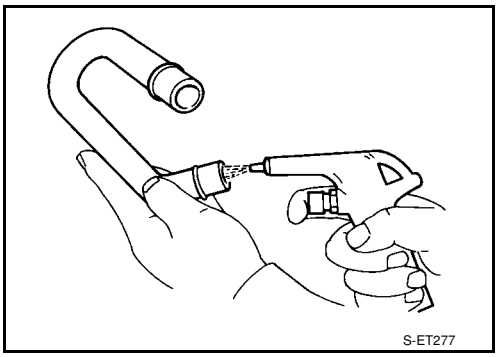

NVIS (NISSAN VEHICLE IMMOBILIZER SYSTEM-NATS)

Description

INFOID:0000000001702572

- **If the security indicator lights up with the ignition switch in the ON position or "NATS MALFUNCTION" is displayed on "SELF-DIAG RESULTS" screen, perform self-diagnostic results mode with CONSULT-II using NATS program card. Refer to BL-210.**
- **Confirm no self-diagnostic results of NVIS (NATS) is displayed before touching "ERASE" in "SELF-DIAG RESULTS" mode with CONSULT-II.**
- **When replacing ECM, initialization of NVIS (NATS) system and registration of all NVIS (NATS) ignition key IDs must be carried out with CONSULT-II using NATS program card.**
  Therefore, be sure to receive all keys from vehicle owner.
  Regarding the procedures of NVIS (NATS) initialization and all NVIS (NATS) ignition key ID registration, refer to CONSULT-II Operation Manual, IVIS/NVIS.

SELF DIAG RESULTS	
DTC RESULTS	TIME
NATS MALFUNCTION [P1610]	0

SEF543X

ON BOARD DIAGNOSTIC (OBD) SYSTEM

Introduction

INFOID:0000000001702573

The ECM has an on board diagnostic system, which detects malfunctions related to engine sensors or actuators. The ECM also records various emission-related diagnostic information including:

Emission-related diagnostic information	Diagnostic service
Diagnostic Trouble Code (DTC)	Service $03 of SAE J1979
Freeze Frame data	Service $02 of SAE J1979
System Readiness Test (SRT) code	Service $01 of SAE J1979
1st Trip Diagnostic Trouble Code (1st Trip DTC)	Service $07 of SAE J1979
1st Trip Freeze Frame data	
Test values and Test limits	Service $06 of SAE J1979
Calibration ID	Service $09 of SAE J1979

The above information can be checked using procedures listed in the table below.

×: Applicable —: Not applicable

	DTC	1st trip DTC	Freeze Frame data	1st trip Freeze Frame data	SRT code	SRT status	Test value
CONSULT-II	×	×	×	×	×	×	—
GST	×	×	×	—	×	×	×
ECM	×	×*	—	—	—	×	—

*: When DTC and 1st trip DTC simultaneously appear on the display, they cannot be clearly distinguished from each other.

The malfunction indicator lamp (MIL) on the instrument panel lights up when the same malfunction is detected in two consecutive trips (Two trip detection logic), or when the ECM enters fail-safe mode.
(Refer to EC-87, "Fail-Safe Chart".)

Two Trip Detection Logic

INFOID:0000000001702574

When a malfunction is detected for the first time, 1st trip DTC and 1st trip Freeze Frame data are stored in the ECM memory. The MIL will not light up at this stage. <1st trip>
If the same malfunction is detected again during the next drive, the DTC and Freeze Frame data are stored in the ECM memory, and the MIL lights up. The MIL lights up at the same time when the DTC is stored. <2nd trip> The “trip” in the “Two Trip Detection Logic” means a driving mode in which self-diagnosis is performed during vehicle operation. Specific on board diagnostic items will cause the ECM to light up or blink the MIL, and store DTC and Freeze Frame data, even in the 1st trip, as shown below.

×: Applicable —: Not applicable

Items	MIL				DTC		1st trip DTC	
	1st trip		2nd trip		1st trip displaying	2nd trip displaying	1st trip displaying	2nd trip displaying
	Blinking	Lighting up	Blinking	Lighting up				
Misfire (Possible three way catalyst damage) — DTC: P0300 - P0304 is being detected	×	—	—	—	—	—	×	—
Misfire (Possible three way catalyst damage) — DTC: P0300 - P0304 is being detected	—	—	×	—	—	×	—	—
One trip detection diagnoses (Refer to EC-47, "Emission-related Diagnostic Information".)	—	×	—	—	×	—	—	—
Except above	—	—	—	×	—	×	×	—

When there is an open circuit on MIL circuit, the ECM cannot warn the driver by MIL lighting up when there is malfunction on engine control system.

Therefore, when electrical controlled throttle and part of ECM related diagnoses are continuously detected as NG for 5 trips, ECM warns the driver that engine control system malfunctions and MIL circuit is open by means of operating fail-safe function.
The fail-safe function also operates when above diagnoses except MIL circuit are detected, and demands the driver to repair the malfunction.

Engine operating condition in fail-safe mode	Engine speed will not rise more than 2,500 rpm due to the fuel cut

Emission-related Diagnostic Information

INFOID:0000000001702575

EMISSION-RELATED DIAGNOSTIC INFORMATION ITEMS

×: Applicable —: Not applicable

Items (CONSULT-II screen terms)	DTC*1		SRT code	Test value/ Test limit (GST only)	Trip	MIL lighting up	Reference page
	CONSULT-II GST*2	ECM*3					
CAN COMM CIRCUIT	U1000	1000*4	—	—	1 (CVT) 1 (A/T) 2 (M/T)	× (CVT) × (A/T) — (M/T)	EC-143
CAN COMM CIRCUIT	U1001	1001*4	—	—	2	—	EC-143
CONTROL UNIT(CAN)	U1010	1010	—	—	1 (CVT) 1 (A/T) 2 (M/T)	× (CVT) × (A/T) — (M/T)	EC-145
NO DTC IS DETECTED. FURTHER TESTING MAY BE REQUIRED.	**P0000**	**0000**	—	—	—	**Flashing*5**	EC-60
INT/V TIM CONT-B1	P0011	0011	—	—	2	×	EC-147
A/F SEN1 HTR (B1)	P0031	0031	—	×	2	×	EC-151
A/F SEN1 HTR (B1)	P0032	0032	—	×	2	×	EC-151
HO2S2 HTR (B1)	P0037	0037	—	×	2	×	EC-156
HO2S2 HTR (B1)	P0038	0038	—	×	2	×	EC-156
INT/V TIM V/CIR-B1	P0075	0075	—	—	2	×	EC-162
MAF SEN/CIRCUIT	P0101	0101	—	—	2	×	EC-167
MAF SEN/CIRCUIT	P0102	0102	—	—	1	×	EC-175
MAF SEN/CIRCUIT	P0103	0103	—	—	1	×	EC-175
IAT SEN/CIRCUIT	P0112	0112	—	—	2	×	EC-182
IAT SEN/CIRCUIT	P0113	0113	—	—	2	×	EC-182
ECT SEN/CIRC	P0117	0117	—	—	1	×	EC-187
ECT SEN/CIRC	P0118	0118	—	—	1	×	EC-187
TP SEN 2/CIRC	P0122	0122	—	—	1	×	EC-192
TP SEN 2/CIRC	P0123	0123	—	—	1	×	EC-192
ECT SENSOR	P0125	0125	—	—	1	×	EC-198
IAT SENSOR	P0127	0127	—	—	2	×	EC-201
THERMSTAT FNCTN	P0128	0128	—	—	2	×	EC-204
A/F SENSOR1 (B1)	P0130	0130	—	×	2	×	EC-206
A/F SENSOR1 (B1)	P0131	0131	—	×	2	×	EC-213
A/F SENSOR1 (B1)	P0132	0132	—	×	2	×	EC-219
A/F SENSOR1 (B1)	P0133	0133	×	×	2	×	EC-225
HO2S2 (B1)	P0137	0137	×	×	2	×	EC-233
HO2S2 (B1)	P0138	0138	×	×	2	×	EC-240
HO2S2 (B1)	P0139	0139	×	×	2	×	EC-250

Items (CONSULT-II screen terms)	DTC*1		SRT code	Test value/ Test limit (GST only)	Trip	MIL lighting up	Reference page
	CONSULT-II GST*2	ECM*3					
FUEL SYS-LEAN-B1	P0171	0171	—	—	2	×	EC-257
FUEL SYS-RICH-B1	P0172	0172	—	—	2	×	EC-264
FTT SENSOR	P0181	0181	—	—	2	×	EC-270
FTT SEN/CIRCUIT	P0182	0182	—	—	2	×	EC-274
FTT SEN/CIRCUIT	P0183	0183	—	—	2	×	EC-274
TP SEN 1/CIRC	P0222	0222	—	—	1	×	EC-278
TP SEN 1/CIRC	P0223	0223	—	—	1	×	EC-278
MULTI CYL MISFIRE	P0300	0300	—	—	2	×	EC-284
CYL 1 MISFIRE	P0301	0301	—	—	2	×	EC-284
CYL 2 MISFIRE	P0302	0302	—	—	2	×	EC-284
CYL 3 MISFIRE	P0303	0303	—	—	2	×	EC-284
CYL 4 MISFIRE	P0304	0304	—	—	2	×	EC-284
KNOCK SEN/CIRC-B1	P0327	0327	—	—	2	—	EC-291
KNOCK SEN/CIRC-B1	P0328	0328	—	—	2	—	EC-291
CKP SEN/CIRCUIT	P0335	0335	—	—	2	×	EC-295
CMP SEN/CIRC-B1	P0340	0340	—	—	2	×	EC-302
TW CATALYST SYS-B1	P0420	0420	×	×	2	×	EC-308
EVAP PURG FLOW/MON	P0441	0441	×	×	2	×	EC-313
EVAP SMALL LEAK	P0442	0442	×	×	2	×	EC-318
PURG VOLUME CONT/V	P0443	0443	—	—	2	×	EC-325
PURG VOLUME CONT/V	P0444	0444	—	—	2	×	EC-332
PURG VOLUME CONT/V	P0445	0445	—	—	2	×	EC-332
VENT CONTROL VALVE	P0447	0447	—	—	2	×	EC-338
VENT CONTROL VALVE	P0448	0448	—	—	2	×	EC-345
EVAP SYS PRES SEN	P0451	0451	—	—	2	×	EC-351
EVAP SYS PRES SEN	P0452	0452	—	—	2	×	EC-355
EVAP SYS PRES SEN	P0453	0453	—	—	2	×	EC-362
EVAP GROSS LEAK	P0455	0455	—	—	2	×	EC-370
EVAP VERY SML LEAK	P0456	0456	×*6	×	2	×	EC-377
FUEL LEV SEN SLOSH	P0460	0460	—	—	2	×	EC-385
FUEL LEVEL SENSOR	P0461	0461	—	—	2	×	EC-387
FUEL LEVL SEN/CIRC	P0462	0462	—	—	2	×	EC-389
FUEL LEVL SEN/CIRC	P0463	0463	—	—	2	×	EC-389
VEH SPEED SEN/CIRC*7	P0500	0500	—	—	2	×	EC-391
ISC SYSTEM	P0506	0506	—	—	2	×	EC-393
ISC SYSTEM	P0507	0507	—	—	2	×	EC-395
ECM	P0605	0605	—	—	1 or 2	— or ×	EC-397
SENSOR POWER/CIRC	P0643	0643	—	—	1	×	EC-400
PNP SW/CIRC	P0705	0705	—	—	2	×	AT-86 (A/T), CVT-65 (CVT)
ATF TEMP SEN/CIRC	P0710	0710	—	—	2	×	AT-91 (A/T), CVT-71 (CVT)
INPUT SPD SEN/CIRC	P0715	0715	—	—	2	×	CVT-76

Items (CONSULT-II screen terms)	DTC*1		SRT code	Test value/ Test limit (GST only)	Trip	MIL lighting up	Reference page
	CONSULT-II GST*2	ECM*3					
VEH SPD SEN/CIR AT*7	P0720	0720	—	—	2	×	AT-96 (A/T), CVT-80 (CVT)
ENGINE SPEED SIG	P0725	0725	—	—	2	×	AT-101
A/T 1ST GR FNCTN	P0731	0731	—	—	2	×	AT-105
A/T 2ND GR FNCTN	P0732	0732	—	—	2	×	AT-108
A/T 3RD GR FNCTN	P0733	0733	—	—	2	×	AT-111
A/T 4TH GR FNCTN	P0734	0734	—	—	2	×	AT-114
TCC SOLENOID/CIRC	P0740	0740	—	—	2	×	AT-119
A/T TCC S/V FNCTN	P0744	0744	—	—	2	×	AT-124 (A/T), CVT-93 (CVT)
L/PRESS SOL/CIRC	P0745	0745	—	—	2	×	AT-129
PRS CNT SOL/A FCTN	P0746	0746	—	—	1	×	CVT-100
SFT SOL A/CIRC	P0750	0750	—	—	1	×	AT-134
SFT SOL B/CIRC	P0755	0755	—	—	1	×	AT-139
PRS CNT SOL/B FCTN	P0776	0776	—	—	2	×	CVT-102
PRS CNT SOL/B CIRC	P0778	0778	—	—	2	×	CVT-104
TR PRS SENS/A CIRC	P0840	0840	—	—	2	×	CVT-109
TR PRS SENS/B CIRC	P0845	0845	—	—	2	×	CVT-115
P-N POS SW/CIRCUIT	P0850	0850	—	—	2	×	EC-405
CLOSED LOOP-B1	P1148	1148	—	—	1	×	EC-411
ENG OVER TEMP	P1217	1217	—	—	1	×	EC-412
CTP LEARNING	P1225	1225	—	—	2	—	EC-426
CTP LEARNING	P1226	1226	—	—	2	—	EC-428
COLD START CONTROL	P1421	1421	—	—	2	×	EC-430
ASCD SW	P1564	1564	—	—	1	—	EC-432
ASCD BRAKE SW	P1572	1572	—	—	1	—	EC-438
ASCD VHL SPD SEN	P1574	1574	—	—	1	—	EC-447
NATS MALFUNCTION	P1610 - P1615	1610 - 1615	—	—	2	—	BL-210
TP SEN/CIRC A/T	P1705	1705	—	—	1	×	CVT-125
IN PULY SPEED	P1715	1715	—	—	2	—	EC-449 (A/T), EC-450 (CVT)
LU-SLCT SOL/CIRC	P1740	1740	—	—	2	×	CVT-132
O/R CLTCH SOL/CIRC	P1760	1760	—	—	2	×	AT-144
STEP MOTR CIRC	P1777	1777	—	—	1	×	CVT-137
STEP MOTR FNC	P1778	1778	—	—	2	×	CVT-141
BRAKE SW/CIRCUIT	P1805	1805	—	—	2	—	EC-452
ETC MOT PWR	P2100	2100	—	—	1	×	EC-456
ETC FUNCTION/CIRC	P2101	2101	—	—	1	×	EC-461
ETC MOT PWR	P2103	2103	—	—	1	×	EC-456
ETC MOT	P2118	2118	—	—	1	×	EC-467
ETC ACTR	P2119	2119	—	—	1	×	EC-472
APP SEN 1/CIRC	P2122	2122	—	—	1	×	EC-474
APP SEN 1/CIRC	P2123	2123	—	—	1	×	EC-474

Items (CONSULT-II screen terms)	DTC*1		SRT code	Test value/ Test limit (GST only)	Trip	MIL lighting up	Reference page
	CONSULT-II GST*2	ECM*3					
APP SEN 2/CIRC	P2127	2127	—	—	1	×	EC-480
APP SEN 2/CIRC	P2128	2128	—	—	1	×	EC-480
TP SENSOR	P2135	2135	—	—	1	×	EC-487
APP SENSOR	P2138	2138	—	—	1	×	EC-493
A/F SENSOR1 (B1)	P2A00	2A00	—	×	2	×	EC-500

*1: 1st trip DTC No. is the same as DTC No.

*2: This number is prescribed by SAE J2012.

*3: In Diagnostic Test Mode II (Self-diagnostic results), this number is controlled by NISSAN.

*4: The troubleshooting for this DTC needs CONSULT-II.

*5: When the ECM in the mode of displaying SRT status, MIL may flash. For the details, refer to "How to Display SRT Status".

*6: SRT code will not be set if the self-diagnostic result is NG.

*7: When the fail-safe operations for both self-diagnoses occur, the MIL illuminates.

DTC AND 1ST TRIP DTC

The 1st trip DTC (whose number is the same as the DTC number) is displayed for the latest self-diagnostic result obtained. If the ECM memory was cleared previously, and the 1st trip DTC did not reoccur, the 1st trip DTC will not be displayed.

If a malfunction is detected during the 1st trip, the 1st trip DTC is stored in the ECM memory. The MIL will not light up (two trip detection logic). If the same malfunction is not detected in the 2nd trip (meeting the required driving pattern), the 1st trip DTC is cleared from the ECM memory. If the same malfunction is detected in the 2nd trip, both the 1st trip DTC and DTC are stored in the ECM memory and the MIL lights up. In other words, the DTC is stored in the ECM memory and the MIL lights up when the same malfunction occurs in two consecutive trips. If a 1st trip DTC is stored and a non-diagnostic operation is performed between the 1st and 2nd trips, only the 1st trip DTC will continue to be stored. For malfunctions that blink or light up the MIL during the 1st trip, the DTC and 1st trip DTC are stored in the ECM memory.

Procedures for clearing the DTC and the 1st trip DTC from the ECM memory are described in "HOW TO ERASE EMISSION-RELATED DIAGNOSTIC INFORMATION".

For malfunctions in which 1st trip DTCs are displayed, refer to "EMISSION-RELATED DIAGNOSTIC INFORMATION ITEMS". These items are required by legal regulations to continuously monitor the system/component. In addition, the items monitored non-continuously are also displayed on CONSULT-II.

1st trip DTC is specified in Service $07 of SAE J1979. 1st trip DTC detection occurs without lighting up the MIL and therefore does not warn the driver of a malfunction. However, 1st trip DTC detection will not prevent the vehicle from being tested, for example during Inspection/Maintenance (I/M) tests.

When a 1st trip DTC is detected, check, print out or write down and erase (1st trip) DTC and Freeze Frame data as specified in Work Flow procedure Step 2, refer to EC-81, "Trouble Diagnosis Introduction". Then perform DTC Confirmation Procedure or Overall Function Check to try to duplicate the malfunction. If the malfunction is duplicated, the item requires repair.

How to Read DTC and 1st Trip DTC

DTC and 1st trip DTC can be read by the following methods.

WITH CONSULT-II

WITH GST

CONSULT-II or GST (Generic Scan Tool) Examples: P0340, P0850, P1148, etc.

These DTCs are prescribed by SAE J2012.

(CONSULT-II also displays the malfunctioning component or system.)

NO TOOLS

The number of blinks of the MIL in the Diagnostic Test Mode II (Self-Diagnostic Results) indicates the DTC. Example: 0340, 0850, 1148, etc.

These DTCs are controlled by NISSAN.

- **1st trip DTC No. is the same as DTC No.**
- **Output of a DTC indicates a malfunction. However, GST or the Diagnostic Test Mode II do not indicate whether the malfunction is still occurring or has occurred in the past and has returned to normal. CONSULT-II can identify malfunction status as shown below. Therefore, using CONSULT-II (if available) is recommended.**

A sample of CONSULT-II display for DTC and 1st trip DTC is shown below. DTC or 1st trip DTC of a malfunction is displayed in SELF-DIAGNOSTIC RESULTS mode of CONSULT-II. Time data indicates how many times the vehicle was driven after the last detection of a DTC.
If the DTC is being detected currently, the time data will be [0].
If a 1st trip DTC is stored in the ECM, the time data will be [1t].

DTC display

SELF DIAG RESULTS	
DTC RESULTS	TIME
CKP SEN/CIRCUIT [P0335]	0

1st trip DTC display

SELF DIAG RESULTS	
DTC RESULTS	TIME
CKP SEN/CIRCUIT [P0335]	1t

PBIB0911E

FREEZE FRAME DATA AND 1ST TRIP FREEZE FRAME DATA

The ECM records the driving conditions such as fuel system status, calculated load value, engine coolant temperature, short term fuel trim, long term fuel trim, engine speed, vehicle speed, absolute throttle position, base fuel schedule and intake air temperature at the moment a malfunction is detected.
Data which are stored in the ECM memory, along with the 1st trip DTC, are called 1st trip freeze frame data. The data, stored together with the DTC data, are called freeze frame data and displayed on CONSULT-II or GST. The 1st trip freeze frame data can only be displayed on the CONSULT-II screen, not on the GST. For details, see EC-109, "CONSULT-II Function (ENGINE)".
Only one set of freeze frame data (either 1st trip freeze frame data or freeze frame data) can be stored in the ECM. 1st trip freeze frame data is stored in the ECM memory along with the 1st trip DTC. There is no priority for 1st trip freeze frame data and it is updated each time a different 1st trip DTC is detected. However, once freeze frame data (2nd trip detection/MIL on) is stored in the ECM memory, 1st trip freeze frame data is no longer stored. Remember, only one set of freeze frame data can be stored in the ECM. The ECM has the following priorities to update the data.

Priority	Items	
1	Freeze frame data	Misfire — DTC: P0300 - P0304 Fuel Injection System Function — DTC: P0171, P0172
2		Except the above items (Includes A/T or CVT related items)
3	1st trip freeze frame data	

For example, the EGR malfunction (Priority: 2) was detected and the freeze frame data was stored in the 2nd trip. After that when the misfire (Priority: 1) is detected in another trip, the freeze frame data will be updated from the EGR malfunction to the misfire. The 1st trip freeze frame data is updated each time a different malfunction is detected. There is no priority for 1st trip freeze frame data. However, once freeze frame data is stored in the ECM memory, 1st trip freeze data is no longer stored (because only one freeze frame data or 1st trip freeze frame data can be stored in the ECM). If freeze frame data is stored in the ECM memory and freeze frame data with the same priority occurs later, the first (original) freeze frame data remains unchanged in the ECM memory.
Both 1st trip freeze frame data and freeze frame data (along with the DTCs) are cleared when the ECM memory is erased. Procedures for clearing the ECM memory are described in "EMISSION-RELATED DIAGNOSTIC INFORMATION ITEMS".

SYSTEM READINESS TEST (SRT) CODE

System Readiness Test (SRT) code is specified in Service $01 of SAE J1979.
As part of an enhanced emissions test for Inspection & Maintenance (I/M), certain states require the status of SRT be used to indicate whether the ECM has completed self-diagnosis of major emission systems and components. Completion must be verified in order for the emissions inspection to proceed.
If a vehicle is rejected for a State emissions inspection due to one or more SRT items indicating “INCMP”, use the information in this Service Manual to set the SRT to “CMPLT”.
In most cases the ECM will automatically complete its self-diagnosis cycle during normal usage, and the SRT status will indicate “CMPLT” for each application system. Once set as “CMPLT”, the SRT status remains “CMPLT” until the self-diagnosis memory is erased.
Occasionally, certain portions of the self-diagnostic test may not be completed as a result of the customer's normal driving pattern; the SRT will indicate “INCMP” for these items.

NOTE:
The SRT will also indicate “INCMP” if the self-diagnosis memory is erased for any reason or if the ECM memory power supply is interrupted for several hours.
If, during the state emissions inspection, the SRT indicates “CMPLT” for all test items, the inspector will continue with the emissions test. However, if the SRT indicates “INCMP” for one or more of the SRT items the vehicle is returned to the customer untested.
NOTE:
If MIL is ON during the state emissions inspection, the vehicle is also returned to the customer untested even though the SRT indicates “CMPLT” for all test items. Therefore, it is important to check SRT (“CMPLT”) and DTC (No DTCs) before the inspection.

SRT Item
The table below shows required self-diagnostic items to set the SRT to “CMPLT”.

SRT item (CONSULT-II indication)	Performance Priority*	Required self-diagnostic items to set the SRT to “CMPLT”	Corresponding DTC No.
CATALYST	2	Three way catalyst function	P0420
EVAP SYSTEM	2	EVAP control system purge flow monitoring	P0441
	1	EVAP control system	P0442
	2	EVAP control system	P0456
HO2S	2	Air fuel ratio (A/F) sensor 1	P0133
		Heated oxygen sensor 2	P0137
		Heated oxygen sensor 2	P0138
		Heated oxygen sensor 2	P0139

*: If completion of several SRTs is required, perform driving patterns (DTC confirmation procedure), one by one based on the priority for models with CONSULT-II.

SRT Set Timing
SRT is set as “CMPLT” after self-diagnosis has been performed one or more times. Completion of SRT is done regardless of whether the result is OK or NG. The set timing is different between OK and NG results and is shown in the table below.

Self-diagnosis result		Example				
		Diagnosis	Ignition cycle ← ON → OFF	← ON → OFF	← ON → OFF	← ON →
All OK	Case 1	P0400	OK (1)	— (1)	OK (2)	— (2)
		P0402	OK (1)	— (1)	— (1)	OK (2)
		P1402	OK (1)	OK (2)	— (2)	— (2)
		SRT of EGR	“CMPLT”	“CMPLT”	“CMPLT”	“CMPLT”
	Case 2	P0400	OK (1)	— (1)	— (1)	— (1)
		P0402	— (0)	— (0)	OK (1)	— (1)
		P1402	OK (1)	OK (2)	— (2)	— (2)
		SRT of EGR	“INCMP”	“INCMP”	“CMPLT”	“CMPLT”
NG exists	Case 3	P0400	OK	OK	—	—
		P0402	—	—	—	—
		P1402	NG	—	NG	NG (Consecutive NG)
		(1st trip) DTC	1st trip DTC	—	1st trip DTC	DTC (= MIL “ON”)
		SRT of EGR	“INCMP”	“INCMP”	“INCMP”	“CMPLT”

OK: Self-diagnosis is carried out and the result is OK.
NG: Self-diagnosis is carried out and the result is NG.

—: Self-diagnosis is not carried out.

When all SRT related self-diagnoses showed OK results in a single cycle (Ignition OFF-ON-OFF), the SRT will indicate “CMPLT”. → Case 1 above

When all SRT related self-diagnoses showed OK results through several different cycles, the SRT will indicate “CMPLT” at the time the respective self-diagnoses have at least one OK result. → Case 2 above

If one or more SRT related self-diagnoses showed NG results in 2 consecutive cycles, the SRT will also indicate “CMPLT”. → Case 3 above

The table above shows that the minimum number of cycles for setting SRT as “INCMP” is one (1) for each self-diagnosis (Case 1 & 2) or two (2) for one of self-diagnoses (Case 3). However, in preparation for the state emissions inspection, it is unnecessary for each self-diagnosis to be executed twice (Case 3) for the following reasons:

- The SRT will indicate “CMPLT” at the time the respective self-diagnoses have one (1) OK result.
- The emissions inspection requires “CMPLT” of the SRT only with OK self-diagnosis results.
- When, during SRT driving pattern, 1st trip DTC (NG) is detected prior to “CMPLT” of SRT, the self-diagnosis memory must be erased from ECM after repair.
- If the 1st trip DTC is erased, all the SRT will indicate “INCMP”.

  NOTE:

  SRT can be set as “CMPLT” together with the DTC(s). Therefore, DTC check must always be carried out prior to the state emission inspection even though the SRT indicates “CMPLT”.

SRT Service Procedure

If a vehicle has failed the state emissions inspection due to one or more SRT items indicating “INCMP”, review the flowchart diagnostic sequence on the next page.

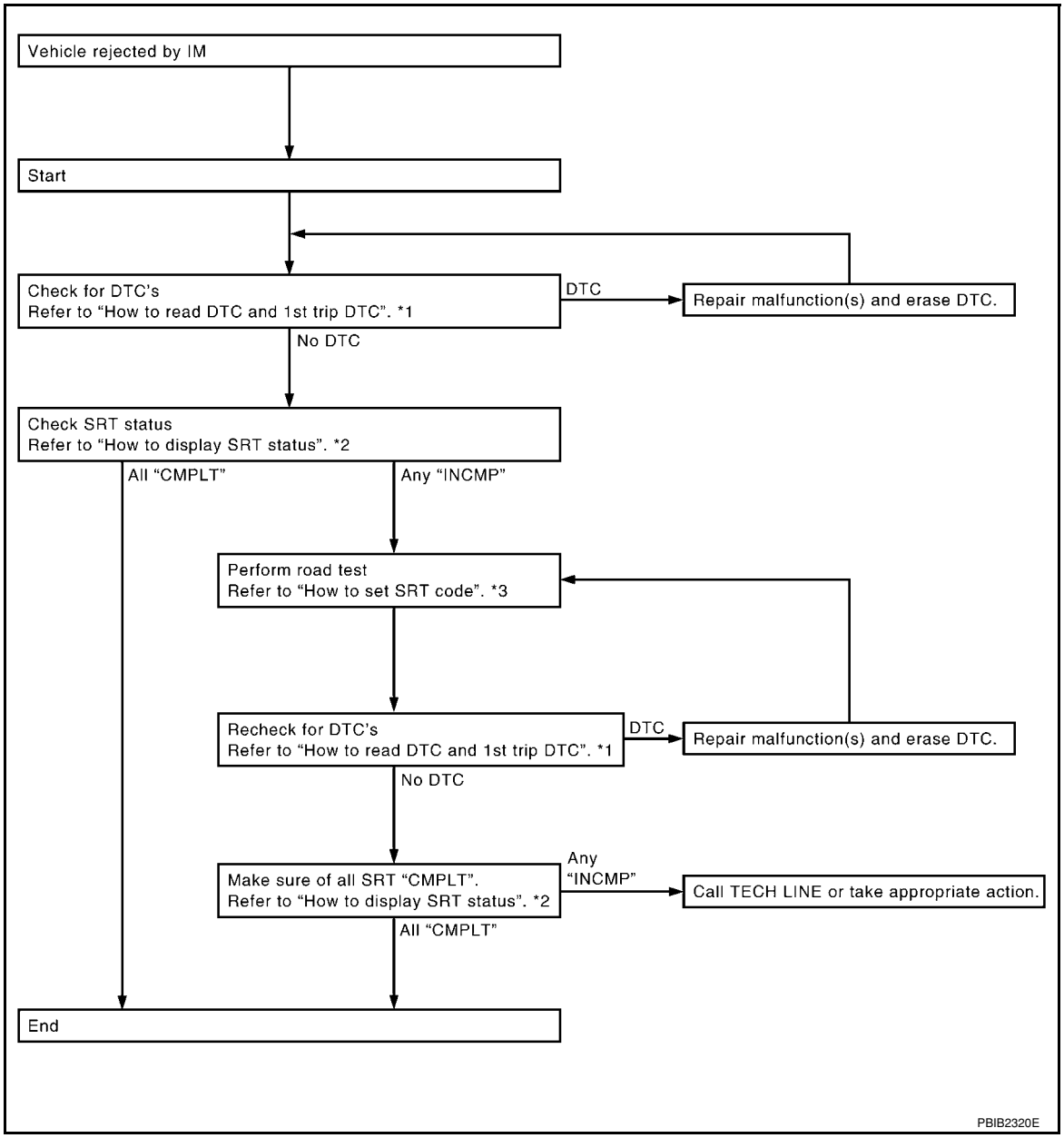

*1 "How to Read DTC and 1st Trip DTC" *2 "How to Display SRT Status" *3 "How to Set SRT Code"

How to Display SRT Status

WITH CONSULT-II

Selecting “SRT STATUS” in “DTC CONFIRMATION” mode with CONSULT-II.

For items whose SRT codes are set, a “CMPLT” is displayed on the CONSULT-II screen; for items whose SRT codes are not set, “INCMP” is displayed.

A sample of CONSULT-II display for SRT code is shown at right.

“INCMP” means the self-diagnosis is incomplete and SRT is not set.

“CMPLT” means the self-diagnosis is complete and SRT is set.

NOTE:

Though displayed on the CONSULT-II screen, “HO2S HTR” is not SRT item.

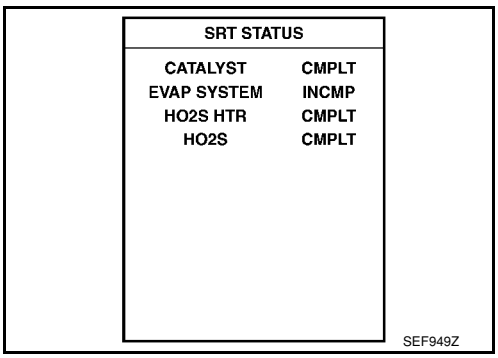

WITH GST

Selecting Service $01 with GST (Generic Scan Tool)

NO TOOLS

A SRT code itself can not be displayed while only SRT status can be.

1. Turn ignition switch ON and wait 20 seconds.
2. SRT status is indicated as shown below.
   - When all SRT codes are set, MIL lights up continuously.
   - When any SRT codes are not set, MIL will flash periodically for 10 seconds.

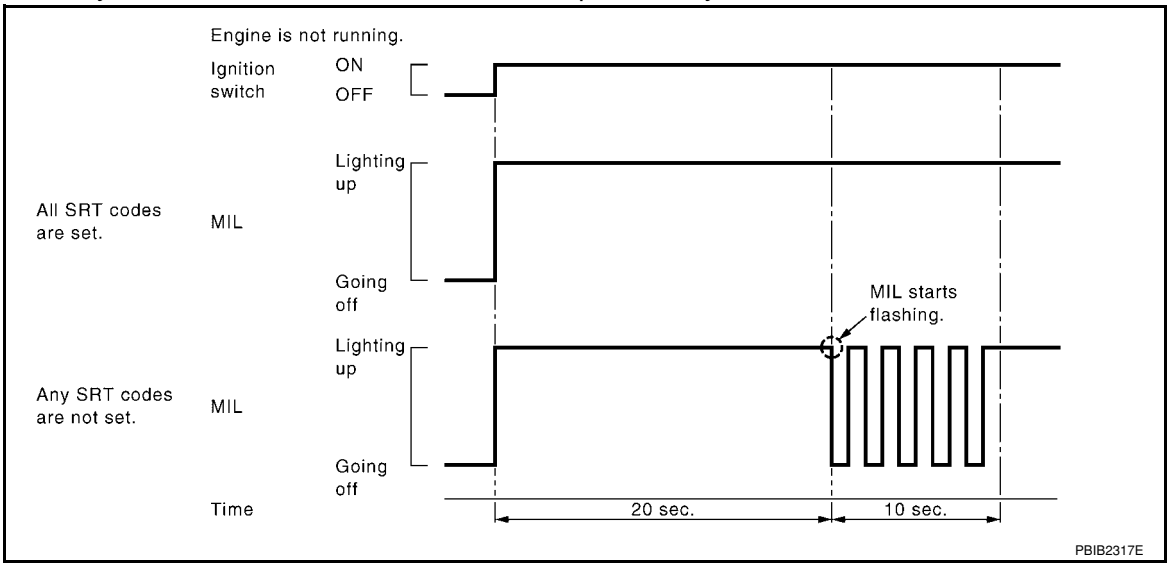

How to Set SRT Code

To set all SRT codes, self-diagnosis for the items indicated above must be performed one or more times. Each diagnosis may require a long period of actual driving under various conditions.

WITH CONSULT-II

Perform corresponding DTC Confirmation Procedure one by one based on Performance Priority in the table on "SRT Item".

WITHOUT CONSULT-II

The most efficient driving pattern in which SRT codes can be properly set is explained on the next page. The driving pattern should be performed one or more times to set all SRT codes.

Driving Pattern

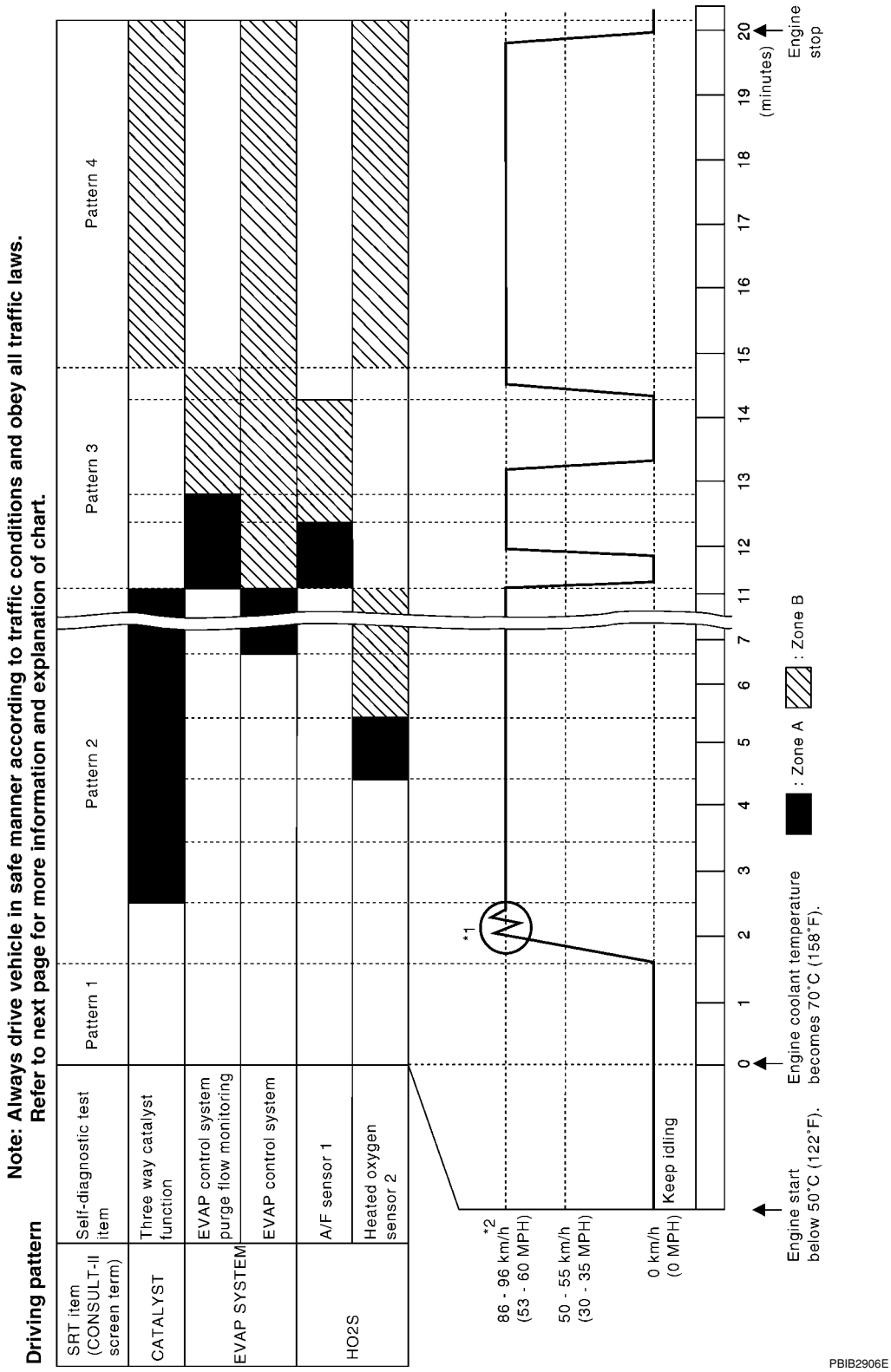

- The time required for each diagnosis varies with road surface conditions, weather, altitude, individual driving habits, etc.
  Zone A refers to the range where the time, required for the diagnosis under normal conditions*, is the shortest.
  Zone B refers to the range where the diagnosis can still be performed if the diagnosis is not completed within zone A.

*: Normal conditions refer to the following:

- Sea level
- Flat road
- Ambient air temperature: 20 - 30°C (68 - 86°F)
- Diagnosis is performed as quickly as possible under normal conditions.
  Under different conditions [For example: ambient air temperature other than 20 - 30°C (68 - 86°F)], diagnosis may also be performed.

Pattern 1:

- **The engine is started at the engine coolant temperature of –10 to 35°C (14 to 95°F) (where the voltage between the ECM terminal 38 and ground is 3.0 - 4.3V).**
- **The engine must be operated at idle speed until the engine coolant temperature is greater than 70°C (158°F) (where the voltage between the ECM terminal 38 and ground is lower than 1.4V).**
- **The engine is started at the fuel tank temperature of warmer than 0°C (32°F) (where the voltage between the ECM terminal 43 and ground is less than 4.1V).**

Pattern 2:

- When steady-state driving is performed again even after it is interrupted, each diagnosis can be conducted. In this case, the time required for diagnosis may be extended.

Pattern 3:

- Operate vehicle following the driving pattern shown in the figure.
- Release the accelerator pedal during decelerating vehicle speed from 90 km/h (56 MPH) to 0 km/h (0 MPH).

Pattern 4:

- The accelerator pedal must be held very steady during steady-state driving.
- If the accelerator pedal is moved, the test must be conducted all over again.

*1: Depress the accelerator pedal until vehicle speed is 90 km/h (56 MPH), then release the accelerator pedal and keep it released for more than 10 seconds. Depress the accelerator pedal until vehicle speed is 90 km/h (56 MPH) again.

*2: Checking the vehicle speed with GST is advised.

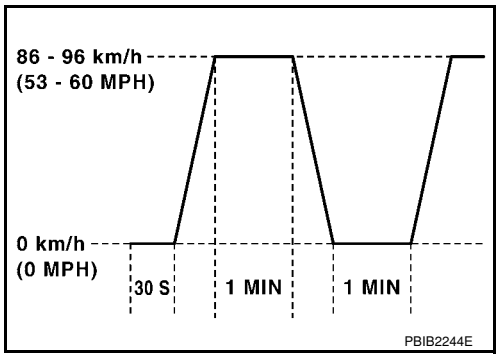

Suggested Transmission Gear Position for A/T and CVT Models

Set the selector lever in the D position (CVT), D position with the overdrive switch turned ON (A/T).

Suggested upshift speeds for M/T models

Shown below are suggested vehicle speeds for shifting into a higher gear. These suggestions relate to fuel economy and vehicle performance. Actual upshift speeds will vary according to road conditions, the weather and individual driving habits.

	For normal acceleration in low altitude areas [less than 1,219 m (4,000 ft)]:	For quick acceleration in low altitude areas	For high attitude areas [over 1,219m (4,000 ft)]:
Gear change	ACCEL shift point km/h (MPH)	km/h (MPH)	km/h (MPH)
1st to 2nd	13 (8)	24 (15)	24 (15)
2nd to 3rd	27 (17)	40 (25)	40 (25)
3rd to 4th	40 (25)	53 (33)	65 (40)
4th to 5th	58 (36)	71 (44)	73 (45)
5th to 6th	82 (51)	82 (51)	82 (51)

Suggested Maximum Speed in Each Gear

Downshift to a lower gear if the engine is not running smoothly, or if you need to accelerate.

Do not exceed the maximum suggested speed (shown below) in any gear. For level road driving, use the highest gear suggested for that speed. Always observe posted speed limits and drive according to the road conditions to ensure safe operation. Do not over-rev the engine when shifting to a lower gear as it may cause engine damage or loss of vehicle control.

Gear	km/h (MPH)
1st	50 (30)
2nd	90 (55)
3rd	—
4th	—
5th	—
6th	—

TEST VALUE AND TEST LIMIT (GST ONLY — NOT APPLICABLE TO CONSULT-II)

The following is the information specified in Service $06 of SAE J1979.
The test value is a parameter used to determine whether a system/circuit diagnostic test is OK or NG while being monitored by the ECM during self-diagnosis. The test limit is a reference value which is specified as the maximum or minimum value and is compared with the test value being monitored.
These data (test value and test limit) are specified by Test ID (TID) and Component ID (CID) and can be displayed on the GST screen.

Item	Self-diagnostic test item	DTC	Test value (GST display)		Test limit	Conversion
			TID	CID		
CATALYST	Three way catalyst function	P0420	01H	81H	Min.	1/128
		P0420	02H	81H	Min.	1
EVAP SYSTEM	EVAP control system (Small leak)	P0442	05H	03H	Max.	1/128 mm^2
	EVAP control system purge flow monitoring	P0441	06H	83H	Min.	20 mV
	EVAP control system (Very small leak)	P0456	07H	03H	Max.	1/128 mm^2
HO2S	Air fuel ratio (A/F) sensor 1	P0131	41H	8EH	Min.	5 mV
		P0132	42H	0EH	Max.	5 mV
		P2A00	43H	0EH	Max.	0.002
		P2A00	44H	8EH	Min.	0.002
		P0130	46H	0EH	Max.	5 mV
		P0130	47H	8EH	Min.	5 mV
		P0133	45H	8EH	Min.	0.004
		P0133	48H	8EH	Min.	0.004
	Heated oxygen sensor 2	P0139	19H	86H	Min.	10mV/500 ms
		P0137	1AH	86H	Min.	10 mV
		P0138	1BH	06H	Max.	10 mV
		P0138	1CH	06H	Max.	10 mV
HO2S HTR	Air fuel ratio (A/F) sensor 1 heater	P0032	57H	10H	Max.	5 mV
		P0031	58H	90H	Min.	5 mV
	Heated oxygen sensor 2 heater	P0038	2DH	0AH	Max.	20 mV
		P0037	2EH	8AH	Min.	20 mV

HOW TO ERASE EMISSION-RELATED DIAGNOSTIC INFORMATION

How to Erase DTC

With CONSULT-II

The emission related diagnostic information in the ECM can be erased by selecting “ERASE” in the “SELF-DIAG RESULTS” mode with CONSULT-II.
If DTCs are displayed for both ECM and TCM (Transmission control module), they need to be erased individually from the ECM and TCM (Transmission control module).

NOTE:

If the DTC is not for A/T or CVT related items (see EC-9), skip steps 2 through 4.

1. If the ignition switch stays ON after repair work, be sure to turn ignition switch OFF once. Wait at least 10 seconds and then turn it ON (engine stopped) again.
2. Turn CONSULT-II ON and touch “TRANSMISSION”.
3. Touch “SELF-DIAG RESULTS”.
4. Touch “ERASE”. [The DTC in the TCM (Transmission control module) will be erased.] Then touch “BACK” twice.
5. Touch “ENGINE”.
6. Touch “SELF-DIAG RESULTS”.
7. Touch “ERASE”. (The DTC in the ECM will be erased.)

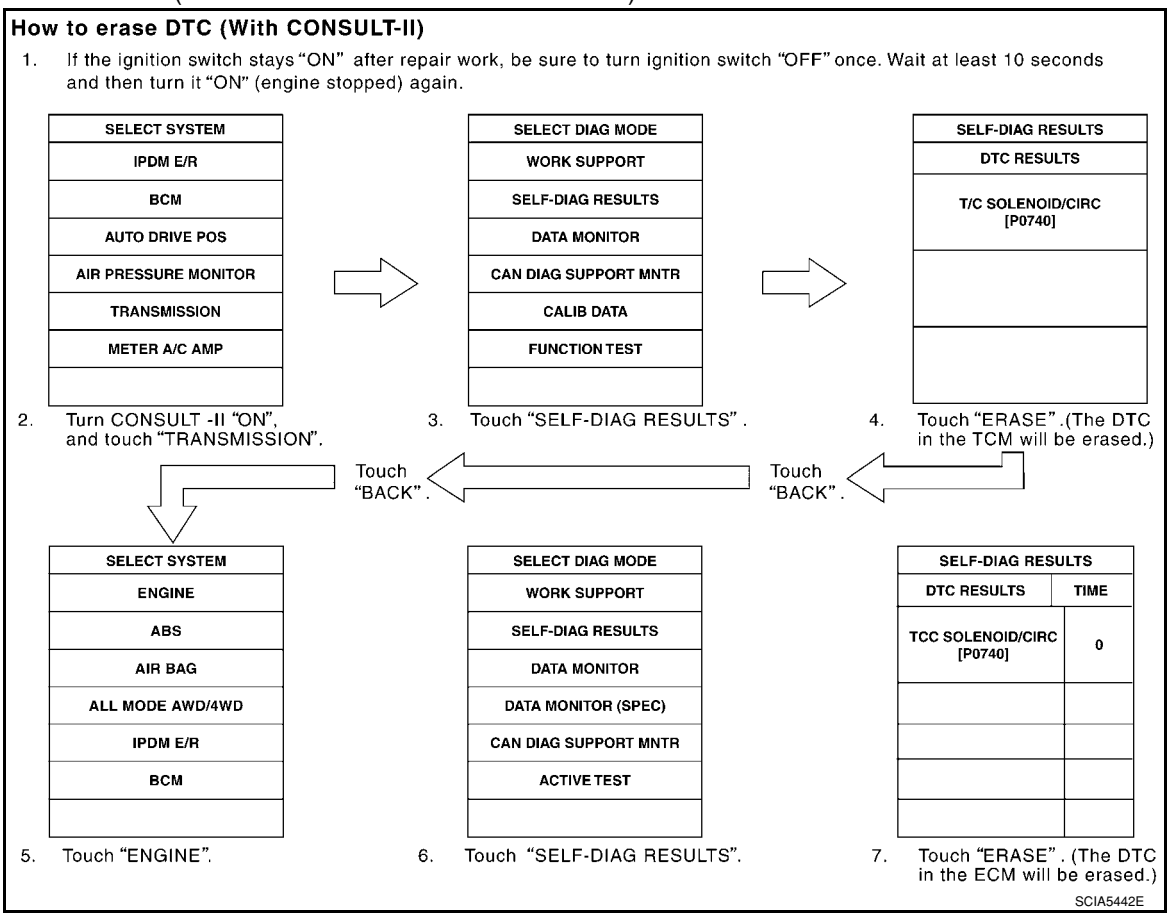

With GST

The emission related diagnostic information in the ECM can be erased by selecting Service $04 with GST.

NOTE:

If the DTC is not for A/T or CVT related items (see EC-9), skip step 2.

1. If the ignition switch stays ON after repair work, be sure to turn ignition switch OFF once. Wait at least 10 seconds and then turn it ON (engine stopped) again.
2. Perform AT-36, "OBD-II Diagnostic Trouble Code (DTC)" or CVT-26, "OBD-II Diagnostic Trouble Code (DTC)" (The DTC in the TCM will be erased.)
3. Select Service $04 with GST (Generic Scan Tool).

No Tools

NOTE:

If the DTC is not for A/T or CVT related items (see EC-9), skip step 2.

1. If the ignition switch stays ON after repair work, be sure to turn ignition switch OFF once. Wait at least 10 seconds and then turn it ON (engine stopped) again.

2. Perform AT-36, "OBD-II Diagnostic Trouble Code (DTC)" or "How to Erase DTC". (The DTC in the TCM will be erased.)
3. Change the diagnostic test mode from Mode II to Mode I by depressing the accelerator pedal. Refer to EC-60, "Malfunction Indicator Lamp (MIL)".

- **If the battery is disconnected, the emission-related diagnostic information will be lost within 24 hours.**
- **The following data are cleared when the ECM memory is erased.**

- Diagnostic trouble codes
- 1st trip diagnostic trouble codes
- Freeze frame data
- 1st trip freeze frame data
- System readiness test (SRT) codes
- Test values

Actual work procedures are explained using a DTC as an example. Be careful so that not only the DTC, but all of the data listed above, are cleared from the ECM memory during work procedures.

Malfunction Indicator Lamp (MIL)

INFOID:0000000001702576

DESCRIPTION

The MIL is located on the instrument panel.

1. The MIL will light up when the ignition switch is turned ON without the engine running. This is a bulb check.
   If the MIL does not light up, refer to DI-21 or see EC-546.
2. When the engine is started, the MIL should go off.
   If the MIL remains on, the on board diagnostic system has detected an engine system malfunction.

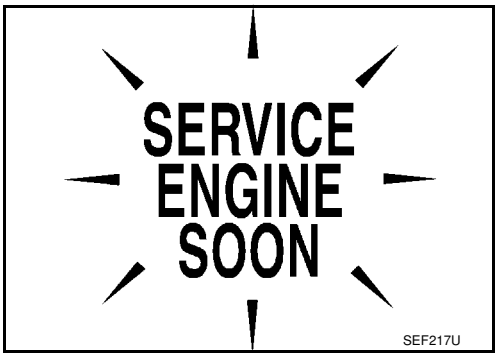

ON BOARD DIAGNOSTIC SYSTEM FUNCTION

The on board diagnostic system has the following three functions.

Diagnostic Test Mode	KEY and ENG. Status	Function	Explanation of Function
Mode I	Ignition switch in ON position Engine stopped	BULB CHECK	This function checks the MIL bulb for damage (blown, open circuit, etc.). If the MIL does not come on, check MIL circuit.
	Engine running	MALFUNCTION WARNING	This is a usual driving condition. When a malfunction is detected twice in two consecutive driving cycles (two trip detection logic), the MIL will light up to inform the driver that a malfunction has been detected. The following malfunctions will light up or blink the MIL in the 1st trip. • Misfire (Possible three way catalyst damage) • One trip detection diagnoses
Mode II	Ignition switch in ON position Engine stopped	SELF-DIAGNOSTIC RESULTS	This function allows DTCs and 1st trip DTCs to be read.

When there is an open circuit on MIL circuit, the ECM cannot warn the driver by MIL lighting up when there is malfunction on engine control system.
Therefore, when electrical controlled throttle and part of ECM related diagnoses are continuously detected as NG for 5 trips, ECM warns the driver that engine control system malfunctions and MIL circuit is open by means of operating fail-safe function.
The fail-safe function also operates when above diagnoses except MIL circuit are detected, and demands the driver to repair the malfunction.

Engine operating condition in fail-safe mode	Engine speed will not rise more than 2,500 rpm due to the fuel cut

MIL Flashing Without DTC
When any SRT codes are not set, MIL may flash without DTC. For the details, refer to EC-47, "Emission-related Diagnostic Information".

HOW TO SWITCH DIAGNOSTIC TEST MODE

NOTE:
- **It is better to count the time accurately with a clock.**
- **It is impossible to switch the diagnostic mode when an accelerator pedal position sensor circuit has a malfunction.**
- **Always ECM returns to Diagnostic Test Mode I after ignition switch is turned OFF.**

How to Set Diagnostic Test Mode II (Self-diagnostic Results)

1. Confirm that accelerator pedal is fully released, turn ignition switch ON and wait 3 seconds.
2. Repeat the following procedure quickly five times within 5 seconds.

a. Fully depress the accelerator pedal.
b. Fully release the accelerator pedal.

3. Wait 7 seconds, fully depress the accelerator pedal and keep it for approx. 10 seconds until the MIL starts blinking.
4. Fully release the accelerator pedal.

ECM has entered to Diagnostic Test Mode II (Self-diagnostic results).

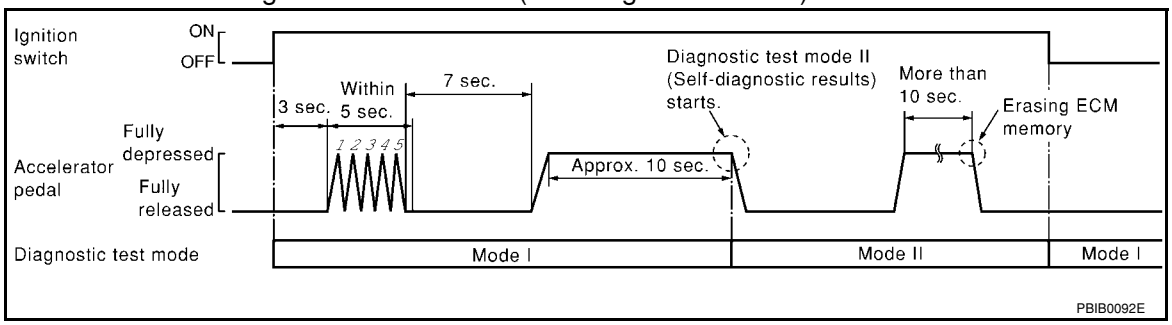

How to Erase Diagnostic Test Mode II (Self-diagnostic Results)

1. Set ECM in Diagnostic Test Mode II (Self-diagnostic results).
   Refer to "How to Set Diagnostic Test Mode II (Self-diagnostic Results)".
2. Fully depress the accelerator pedal and keep it for more than 10 seconds.
   The emission-related diagnostic information has been erased from the backup memory in the ECM.
3. Fully release the accelerator pedal, and confirm the DTC 0000 is displayed.

DIAGNOSTIC TEST MODE I — BULB CHECK

In this mode, the MIL on the instrument panel should stay ON. If it remains OFF, check the bulb.
Refer to DI-21 or EC-546.

DIAGNOSTIC TEST MODE I — MALFUNCTION WARNING

MIL	Condition
ON	When the malfunction is detected.
OFF	No malfunction

These DTC numbers are clarified in Diagnostic Test Mode II (SELF-DIAGNOSTIC RESULTS)

DIAGNOSTIC TEST MODE II — SELF-DIAGNOSTIC RESULTS

In this mode, the DTC and 1st trip DTC are indicated by the number of blinks of the MIL as shown below.
The DTC and 1st trip DTC are displayed at the same time. If the MIL does not illuminate in diagnostic test mode I (Malfunction warning), all displayed items are 1st trip DTCs. If only one code is displayed when the MIL illuminates in diagnostic test mode II (SELF-DIAGNOSTIC RESULTS), it is a DTC; if two or more codes are displayed, they may be either DTCs or 1st trip DTCs. DTC No. is same as that of 1st trip DTC. These uniden-

tified codes can be identified by using the CONSULT-II or GST. A DTC will be used as an example for how to read a code.

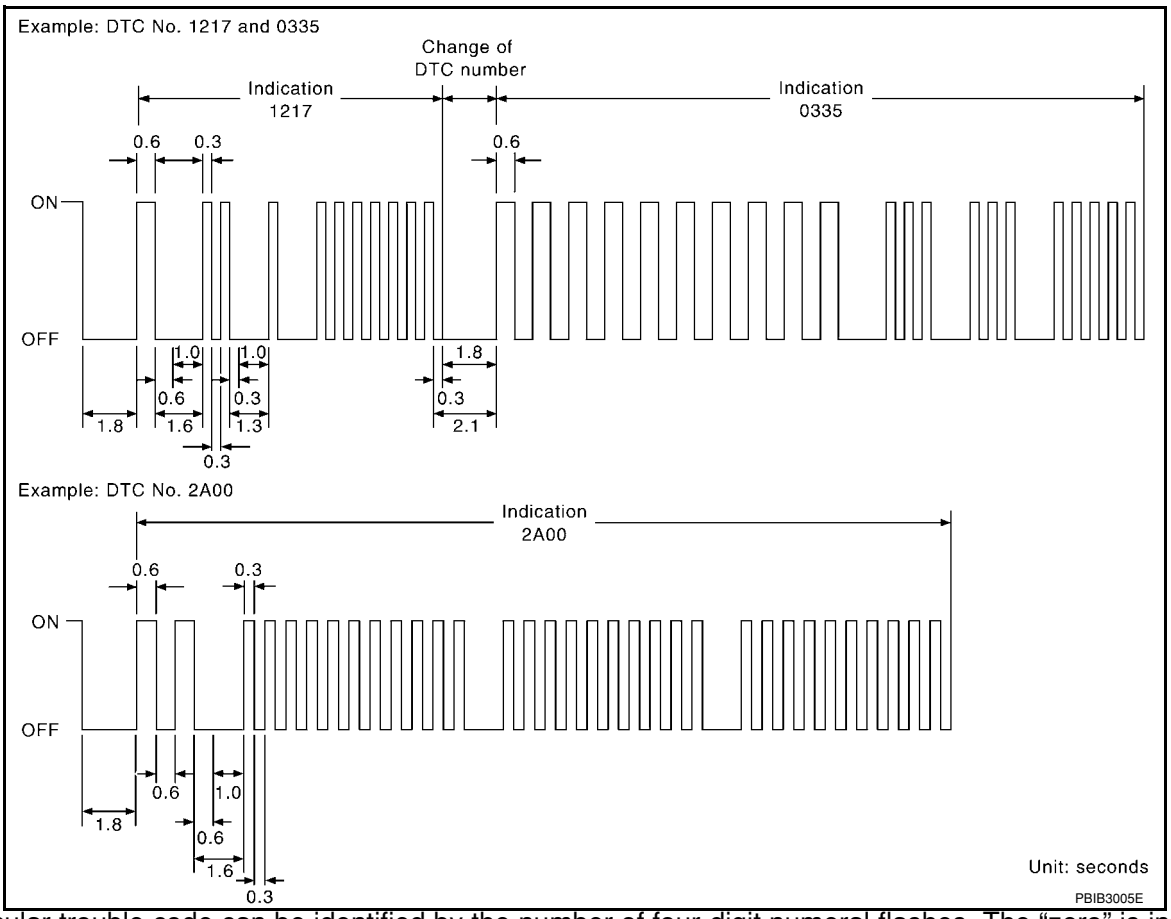

A particular trouble code can be identified by the number of four-digit numeral flashes. The “zero” is indicated by the number of ten flashes. The “A” is indicated by the number of eleven flash. The length of time the 1,000th-digit numeral flashes on and off is 1.2 seconds consisting of an ON (0.6-second) - OFF (0.6-second) cycle. The 100th-digit numeral and lower digit numerals consist of a 0.3-second ON and 0.3-second OFF cycle. A change from one digit numeral to another occurs at an interval of 1.0-second OFF. In other words, the later numeral appears on the display 1.3 seconds after the former numeral has disappeared.
A change from one trouble code to another occurs at an interval of 1.8-second OFF.
In this way, all the detected malfunctions are classified by their DTC numbers. The DTC 0000 refers to no malfunction. (See EC-9)

How to Erase Diagnostic Test Mode II (Self-diagnostic Results)
The DTC can be erased from the back-up memory in the ECM by depressing accelerator pedal.
Refer to "How to Erase Diagnostic Test Mode II (Self-diagnostic Results)".
- **If the battery is disconnected, the DTC will be lost from the backup memory within 24 hours.**
- **Be careful not to erase the stored memory before starting trouble diagnoses.**

OBD System Operation Chart

INFOID:0000000001702577

RELATIONSHIP BETWEEN MIL, 1ST TRIP DTC, DTC, AND DETECTABLE ITEMS

- When a malfunction is detected for the first time, the 1st trip DTC and the 1st trip freeze frame data are stored in the ECM memory.
- When the same malfunction is detected in two consecutive trips, the DTC and the freeze frame data are stored in the ECM memory, and the MIL will come on. For details, refer to EC-46, "Two Trip Detection Logic".
- The MIL will go off after the vehicle is driven 3 times (driving pattern B) with no malfunction. The drive is counted only when the recorded driving pattern is met (as stored in the ECM). If another malfunction occurs while counting, the counter will reset.
- The DTC and the freeze frame data will be stored until the vehicle is driven 40 times (driving pattern A) without the same malfunction recurring (except for Misfire and Fuel Injection System). For Misfire and Fuel Injection System, the DTC and freeze frame data will be stored until the vehicle is driven 80 times (driving pattern

C) without the same malfunction recurring. The “TIME” in “SELF-DIAGNOSTIC RESULTS” mode of CONSULT-II will count the number of times the vehicle is driven.

- The 1st trip DTC is not displayed when the self-diagnosis results in OK for the 2nd trip.

SUMMARY CHART

Items	Fuel Injection System	Misfire	Other
MIL (goes off)	3 (pattern B)	3 (pattern B)	3 (pattern B)
DTC, Freeze Frame Data (no display)	80 (pattern C)	80 (pattern C)	40 (pattern A)
1st Trip DTC (clear)	1 (pattern C), *1	1 (pattern C), *1	1 (pattern B)
1st Trip Freeze Frame Data (clear)	*1, *2	*1, *2	1 (pattern B)

For details about patterns B and C under “Fuel Injection System” and “Misfire”, see "EXPLANATION FOR DRIVING PATTERNS FOR “MISFIRE <EXHAUST QUALITY DETERIORATION>”, “FUEL INJECTION SYSTEM””.

For details about patterns A and B under “Other”, see "EXPLANATION FOR DRIVING PATTERNS FOR “MISFIRE <EXHAUST QUALITY DETERIORATION>”, “FUEL INJECTION SYSTEM””.

*1: Clear timing is at the moment OK is detected.

*2: Clear timing is when the same malfunction is detected in the 2nd trip.

RELATIONSHIP BETWEEN MIL, DTC, 1ST TRIP DTC AND DRIVING PATTERNS FOR “MISFIRE <EXHAUST QUALITY DETERIORATION>”, “FUEL INJECTION SYSTEM”

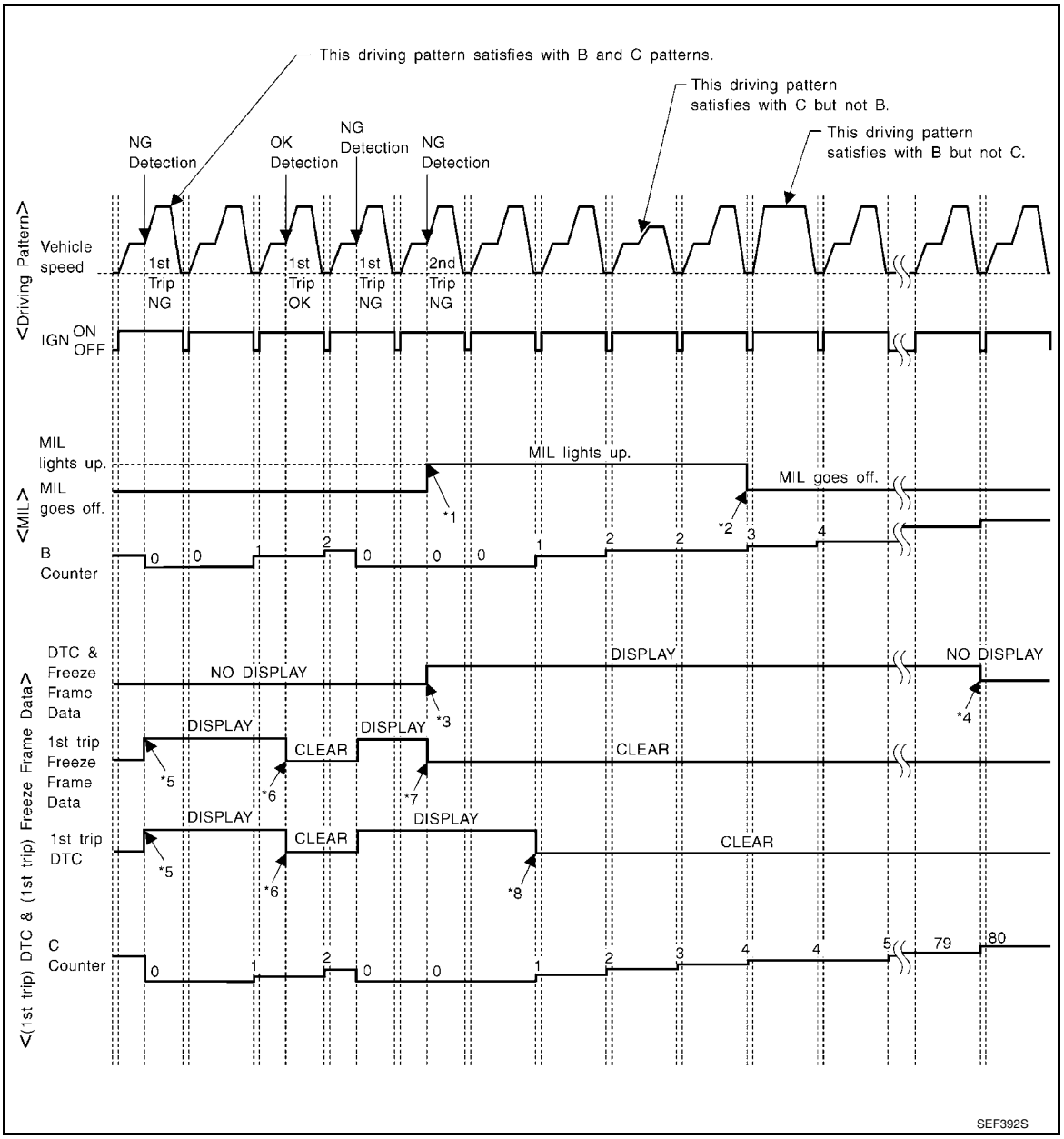

*1: When the same malfunction is detected in two consecutive trips, MIL will light up.

*2: MIL will go off after vehicle is driven 3 times (pattern B) without any malfunctions.

*3: When the same malfunction is detected in two consecutive trips, the DTC and the freeze frame data will be stored in ECM.

*4: The DTC and the freeze frame data will not be displayed any longer after vehicle is driven 80 times (pattern C) without the same malfunction. (The DTC and the freeze frame data still remain in ECM.)

*5: When a malfunction is detected for the first time, the 1st trip DTC and the 1st trip freeze frame data will be stored in ECM.

*6: The 1st trip DTC and the 1st trip freeze frame data will be cleared at the moment OK is detected.

*7: When the same malfunction is detected in the 2nd trip, the 1st trip freeze frame data will be cleared.

*8: 1st trip DTC will be cleared when vehicle is driven once (pattern C) without the same malfunction after DTC is stored in ECM.

EXPLANATION FOR DRIVING PATTERNS FOR “MISFIRE <EXHAUST QUALITY DETERIORATION>”, “FUEL INJECTION SYSTEM”

<Driving Pattern B>

Driving pattern B means the vehicle operation as follows:

All components and systems should be monitored at least once by the OBD system.
- The B counter will be cleared when the malfunction is detected once regardless of the driving pattern.
- The B counter will be counted up when driving pattern B is satisfied without any malfunction.
- The MIL will go off when the B counter reaches 3. (*2 in “OBD SYSTEM OPERATION CHART”)

<Driving Pattern C>
Driving pattern C means the vehicle operation as follows:
The following conditions should be satisfied at the same time:
Engine speed: (Engine speed in the freeze frame data) ±375 rpm
Calculated load value: (Calculated load value in the freeze frame data) x (1±0.1) [%]
Engine coolant temperature (T) condition:
- When the freeze frame data shows lower than 70°C (158°F), “T” should be lower than 70°C (158°F).
- When the freeze frame data shows higher than or equal to 70°C (158°F), “T” should be higher than or equal to 70°C (158°F).

Example:
If the stored freeze frame data is as follows:
Engine speed: 850 rpm, Calculated load value: 30%, Engine coolant temperature: 80°C (176°F)
To be satisfied with driving pattern C, the vehicle should run under the following conditions:
Engine speed: 475 - 1,225 rpm, Calculated load value: 27 - 33%, Engine coolant temperature: more than 70°C (158°F)
- The C counter will be cleared when the malfunction is detected regardless of vehicle conditions above.
- The C counter will be counted up when vehicle conditions above is satisfied without the same malfunction.
- The DTC will not be displayed after C counter reaches 80.
- The 1st trip DTC will be cleared when C counter is counted once without the same malfunction after DTC is stored in ECM.

RELATIONSHIP BETWEEN MIL, DTC, 1ST TRIP DTC AND DRIVING PATTERNS EXCEPT FOR “MISFIRE <EXHAUST QUALITY DETERIORATION>”, “FUEL INJECTION SYSTEM”

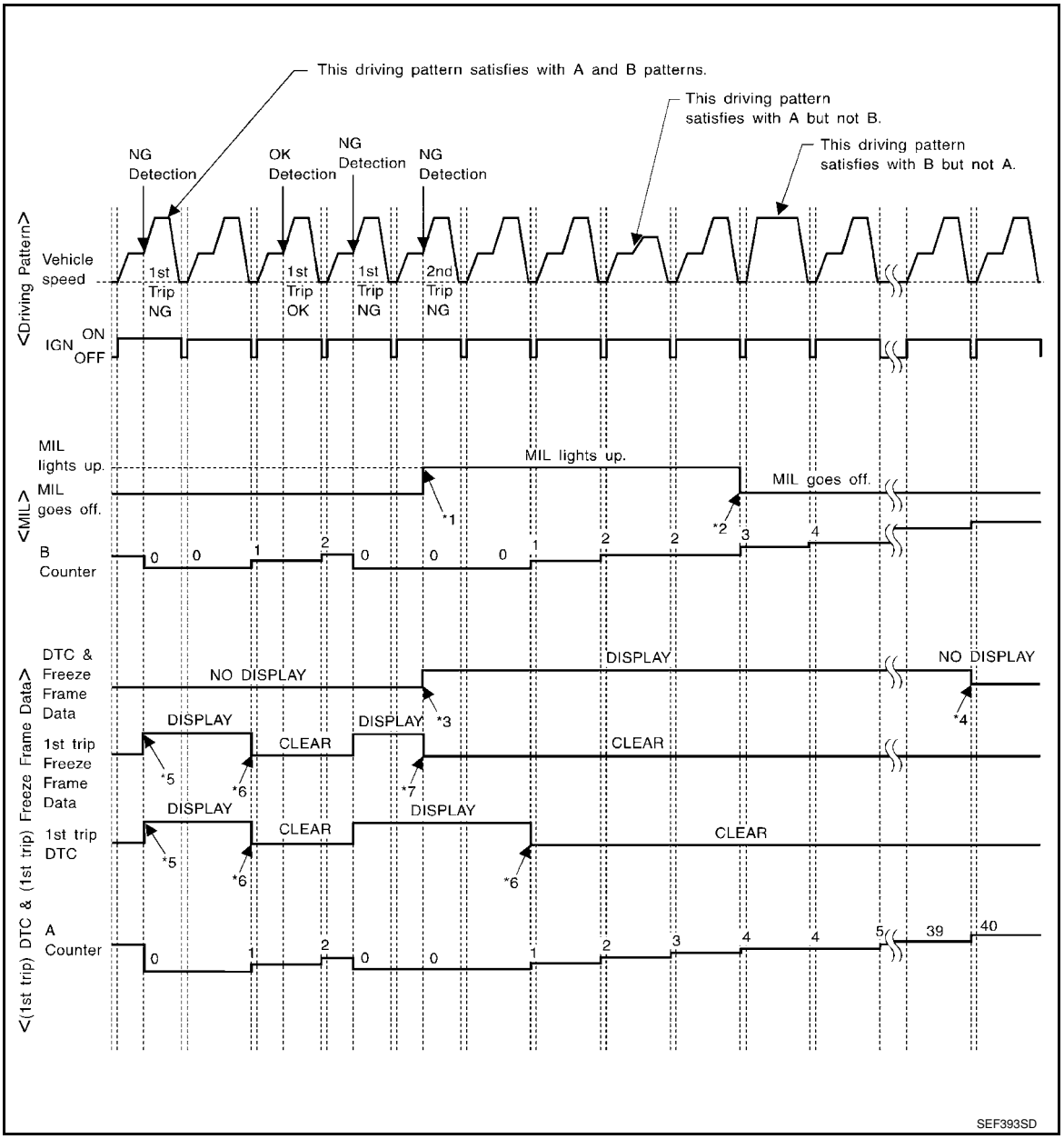

*1: When the same malfunction is detected in two consecutive trips, MIL will light up.

*2: MIL will go off after vehicle is driven 3 times (pattern B) without any malfunctions.

*3: When the same malfunction is detected in two consecutive trips, the DTC and the freeze frame data will be stored in ECM.

*4: The DTC and the freeze frame data will not be displayed any longer after vehicle is driven 40 times (pattern A) without the same malfunction. (The DTC and the freeze frame data still remain in ECM.)

*5: When a malfunction is detected for the first time, the 1st trip DTC and the 1st trip freeze frame data will be stored in ECM.

*6: 1st trip DTC will be cleared after vehicle is driven once (pattern B) without the same malfunction.

*7: When the same malfunction is detected in the 2nd trip, the 1st trip freeze frame data will be cleared.

EXPLANATION FOR DRIVING PATTERNS EXCEPT FOR “MISFIRE <EXHAUST QUALITY DETERIORATION>”, “FUEL INJECTION SYSTEM”

<Driving Pattern A>

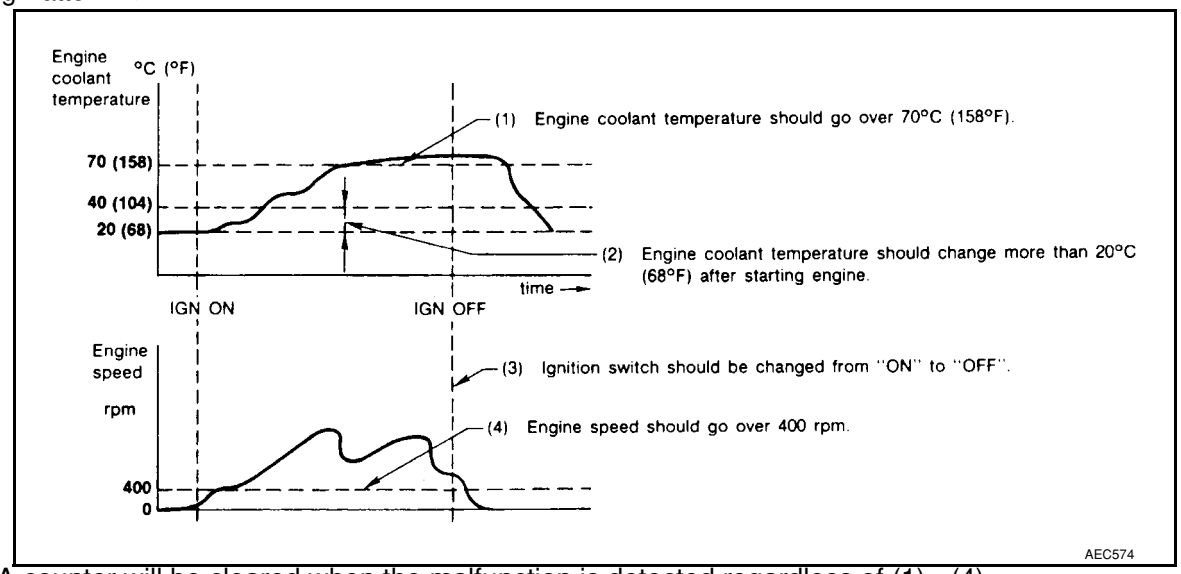

- The A counter will be cleared when the malfunction is detected regardless of (1) - (4).
- The A counter will be counted up when (1) - (4) are satisfied without the same malfunction.
- The DTC will not be displayed after the A counter reaches 40.

<Driving Pattern B>

Driving pattern B means the vehicle operation as follows:

All components and systems should be monitored at least once by the OBD system.

- The B counter will be cleared when the malfunction is detected once regardless of the driving pattern.
- The B counter will be counted up when driving pattern B is satisfied without any malfunctions.
- The MIL will go off when the B counter reaches 3 (*2 in “OBD SYSTEM OPERATION CHART”).

BASIC SERVICE PROCEDURE

Basic Inspection

INFOID:0000000001702578

1. INSPECTION START

1. Check service records for any recent repairs that may indicate a related malfunction, or a current need for scheduled maintenance.
2. Open engine hood and check the following:
- Harness connectors for improper connections
- Wiring harness for improper connections, pinches and cut
- Vacuum hoses for splits, kinks and improper connections
- Hoses and ducts for leaks
- Air cleaner clogging
- Gasket
3. Confirm that electrical or mechanical loads are not applied.
- Headlamp switch is OFF.
- Air conditioner switch is OFF.
- Rear window defogger switch is OFF.
- Steering wheel is in the straight-ahead position, etc.
4. Start engine and warm it up until engine coolant temperature indicator points the middle of gauge.
   Ensure engine stays below 1,000 rpm.

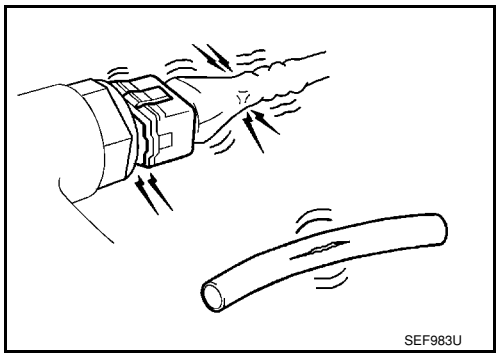
SEF983U

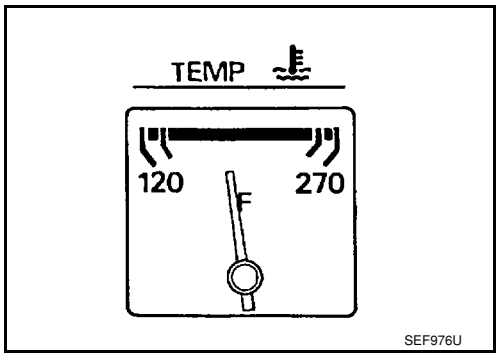

SEF976U

5. Run engine at about 2,000 rpm for about 2 minutes under no load.
6. Make sure that no DTC is displayed with CONSULT-II or GST.

<u>OK or NG</u>

OK >> GO TO 3.
NG >> GO TO 2.

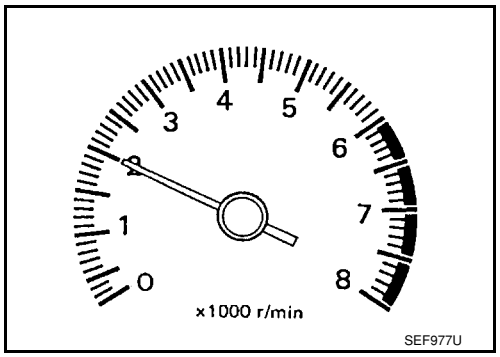

SEF977U

2. REPAIR OR REPLACE

Repair or replace components as necessary according to corresponding Diagnostic Procedure.

>> GO TO 3.

3. CHECK TARGET IDLE SPEED

With CONSULT-II

1. Run engine at about 2,000 rpm for about 2 minutes under no load.

2. Rev engine (2,000 to 3,000 rpm) two or three times under no load, then run engine at idle speed for about 1 minute.

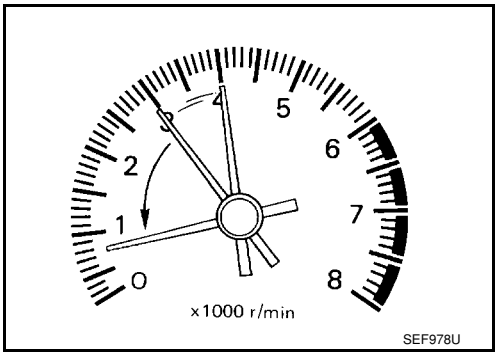

3. Read idle speed in “DATA MONITOR” mode with CONSULT-II. Refer to EC-73, "Idle Speed and Ignition Timing Check".

M/T: 700 ± 50 rpm (in Neutral position)
A/T: 700 ± 50 rpm (in P or N position)
CVT: 700 ± 50 rpm (in P or N position)

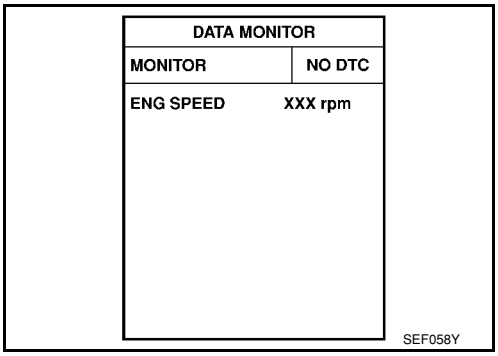

Without CONSULT-II

1. Run engine at about 2,000 rpm for about 2 minutes under no load.
2. Rev engine (2,000 to 3,000 rpm) two or three times under no load, then run engine at idle speed for about 1 minute.
3. Check idle speed. Refer to EC-73, "Idle Speed and Ignition Timing Check".

M/T: 700 ± 50 rpm (in Neutral position)
A/T: 700 ± 50 rpm (in P or N position)
CVT: 700 ± 50 rpm (in P or N position)

OK or NG

OK >> GO TO 10.
NG >> GO TO 4.

4. PERFORM ACCELERATOR PEDAL RELEASED POSITION LEARNING

1. Stop engine.
2. Perform EC-76, "Accelerator Pedal Released Position Learning".

>> GO TO 5.

5. PERFORM THROTTLE VALVE CLOSED POSITION LEARNING

Perform EC-76, "Throttle Valve Closed Position Learning".

>> GO TO 6.

6. PERFORM IDLE AIR VOLUME LEARNING

Refer to EC-76, "Idle Air Volume Learning".
Is Idle Air Volume Learning carried out successfully?

Yes or No

Yes >> GO TO 7.
No >> 1. Follow the instruction of Idle Air Volume Learning.
2. GO TO 4.

7. CHECK TARGET IDLE SPEED AGAIN

With CONSULT-II

1. Start engine and warm it up to normal operating temperature.
2. Read idle speed in “DATA MONITOR” mode with CONSULT-II. Refer to EC-73, "Idle Speed and Ignition Timing Check".

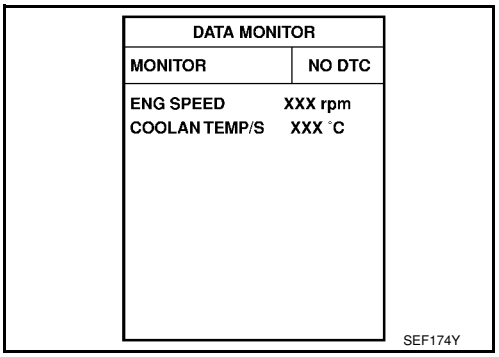

M/T: 700 ± 50 rpm (in Neutral position)

A/T: 700 ± 50 rpm (in P or N position)

CVT: 700 ± 50 rpm (in P or N position)

Without CONSULT-II

1. Start engine and warm it up to normal operating temperature.
2. Check idle speed. Refer to EC-73, "Idle Speed and Ignition Timing Check".

M/T: 700 ± 50 rpm (in Neutral position)

A/T: 700 ± 50 rpm (in P or N position)

CVT: 700 ± 50 rpm (in P or N position)

OK or NG

OK >> GO TO 10.
NG >> GO TO 8.

8. DETECT MALFUNCTIONING PART

Check the following.

- Check crankshaft position sensor (POS) and circuit. Refer to EC-295.
- Check camshaft position sensor (PHASE) and circuit. Refer to EC-302.

OK or NG

OK >> GO TO 9.
NG >> 1. Repair or replace.
2. GO TO 4.

9. CHECK ECM FUNCTION

1. Substitute another known-good ECM to check ECM function. (ECM may be the cause of an incident, but this is a rare case.)
2. Perform initialization of NVIS (NATS) system and registration of all NVIS (NATS) ignition key IDs. Refer to BL-211, "ECM Re-communicating Function".

>> GO TO 4.

10. CHECK IGNITION TIMING

1. Run engine at idle.
2. Check ignition timing with a timing light. Refer to EC-73, "Idle Speed and Ignition Timing Check".

- Timing indicator (1)

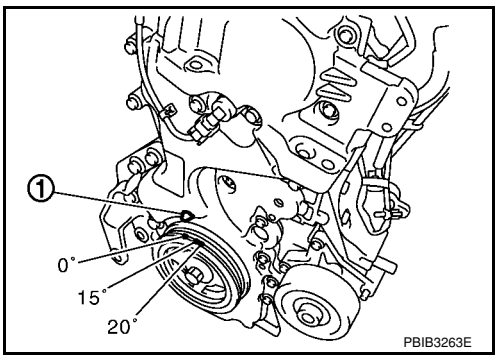

M/T: 13 ± 5° BTDC (in Neutral position)

A/T: 13 ± 5° BTDC (in P or N position)

CVT: 13 ± 5° BTDC (in P or N position)

OK or NG

OK >> GO TO 19.
NG >> GO TO 11.

11. PERFORM ACCELERATOR PEDAL RELEASED POSITION LEARNING

1. Stop engine.
2. Perform EC-76, "Accelerator Pedal Released Position Learning".

>> GO TO 12.

12. PERFORM THROTTLE VALVE CLOSED POSITION LEARNING

Perform EC-76, "Throttle Valve Closed Position Learning".

>> GO TO 13.

13. PERFORM IDLE AIR VOLUME LEARNING

Refer to EC-76, "Idle Air Volume Learning".

Is Idle Air Volume Learning carried out successfully?

Yes or No

Yes >> GO TO 14.
No >> 1. Follow the instruction of Idle Air Volume Learning.
2. GO TO 4.

14. CHECK TARGET IDLE SPEED AGAIN

With CONSULT-II

1. Start engine and warm it up to normal operating temperature.
2. Read idle speed in “DATA MONITOR” mode with CONSULT-II. Refer to EC-73, "Idle Speed and Ignition Timing Check".

M/T: 700 ± 50 rpm (in Neutral position)
A/T: 700 ± 50 rpm (in P or N position)
CVT: 700 ± 50 rpm (in P or N position)

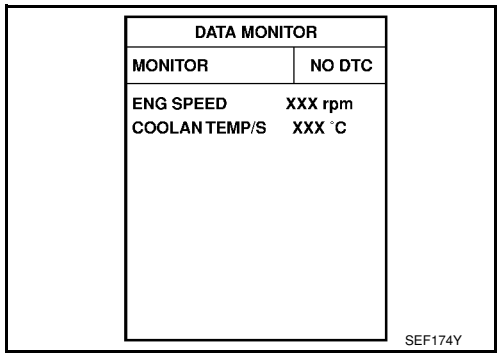

Without CONSULT-II

1. Start engine and warm it up to normal operating temperature.
2. Check idle speed. Refer to EC-73, "Idle Speed and Ignition Timing Check".

M/T: 700 ± 50 rpm (in Neutral position)
A/T: 700 ± 50 rpm (in P or N position)
CVT: 700 ± 50 rpm (in P or N position)

OK or NG

OK >> GO TO 15.
NG >> GO TO 17.

15. CHECK IGNITION TIMING AGAIN

1. Run engine at idle.
2. Check ignition timing with a timing light. Refer to EC-73, "Idle Speed and Ignition Timing Check".

- Timing indicator (1)

M/T: 13 ± 5° BTDC (in Neutral position)
A/T: 13 ± 5° BTDC (in P or N position)
CVT: 13 ± 5° BTDC (in P or N position)

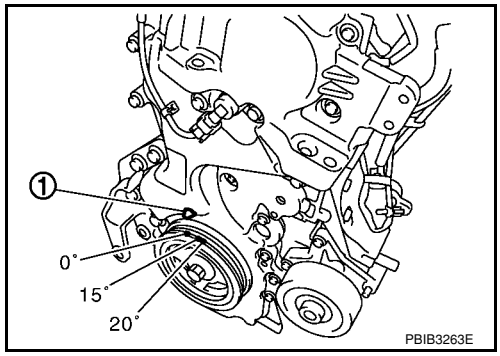

OK or NG

OK >> GO TO 19
NG >> GO TO 16.

16. CHECK TIMING CHAIN INSTALLATION

Check timing chain installation. Refer to EM-37.

OK or NG

OK >> GO TO 17.
NG >> 1. Repair the timing chain installation.

2. GO TO 4.

17. DETECT MALFUNCTIONING PART

Check the following.
- Check crankshaft position sensor (POS) and circuit.
  Refer to EC-295.
- Check camshaft position sensor (PHASE) and circuit.
  Refer to EC-302.

OK or NG

OK >> GO TO 18.
NG >> 1. Repair or replace.
2. GO TO 4.

18. CHECK ECM FUNCTION

1. Substitute another known-good ECM to check ECM function. (ECM may be the cause of an incident, but this is a rare case.)
2. Perform initialization of NVIS (NATS) system and registration of all NVIS (NATS) ignition key IDs.
   Refer to BL-211, "ECM Re-communicating Function".

>> GO TO 4.

19. INSPECTION END

Did you replace ECM, referring this Basic Inspection procedure?

Yes or No

Yes >> 1. Perform EC-75, "VIN Registration".
2. **INSPECTION END**
No >> **INSPECTION END**

Idle Speed and Ignition Timing Check

INFOID:0000000001702579

IDLE SPEED

With CONSULT-II
Check idle speed in “DATA MONITOR” mode with CONSULT-II.

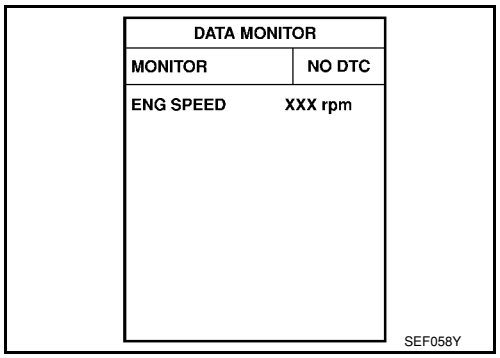

With GST
Check idle speed in Service $01 with GST.

IGNITION TIMING

Any of following two methods may be used.

Method A

1. Attach timing light to loop wire (1) as shown.
   - ⇦: Vehicle front

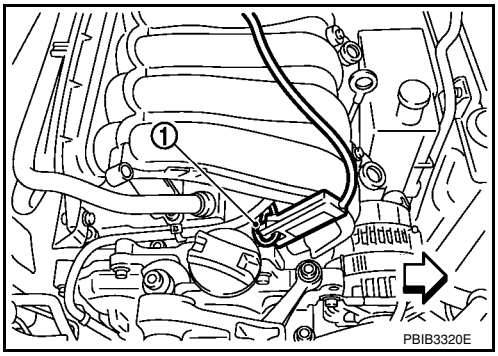

2. Check ignition timing.
   - Timing indicator (1)

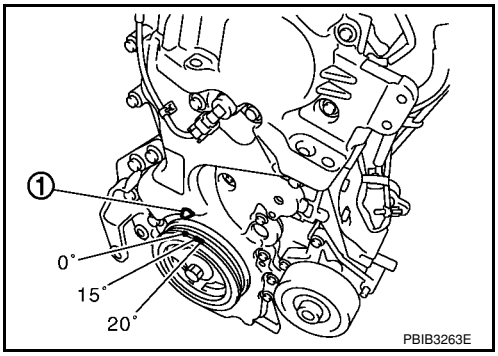

Method B

1. Remove No. 4 ignition coil (1).
   - ⇦: Vehicle front

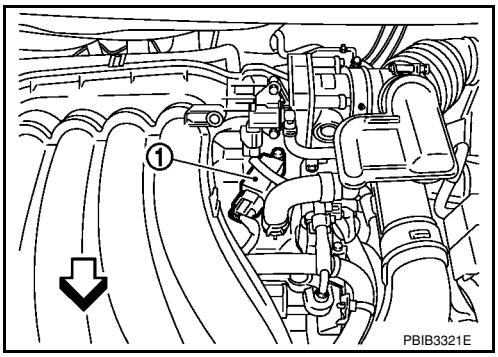

2. Connect No. 4 ignition coil (1) and No. 4 spark plug with suitable high-tension wire (A) as shown, and attach timing light clamp (B) to this wire.
   - ⇦: Vehicle front

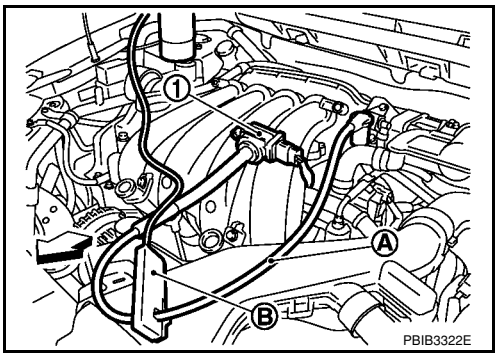

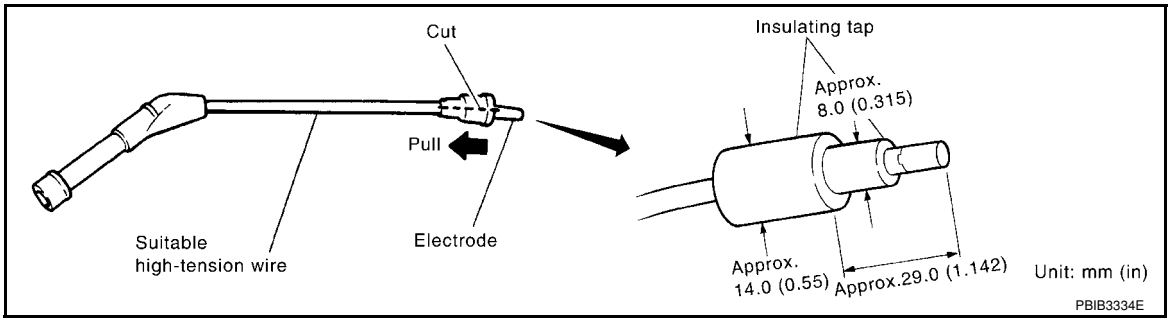

3. Check ignition timing.
   - Timing indicator (1)

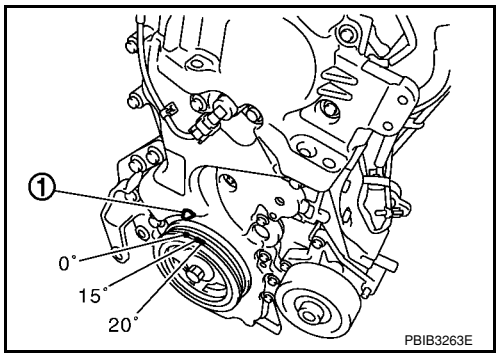

Procedure After Replacing ECM

INFOID:0000000001702580

When replacing ECM, the following procedure must be performed.

1. Perform initialization of NVIS (NATS) system and registration of all NVIS (NATS) ignition key IDs. Refer to BL-211, "ECM Re-communicating Function".
2. Perform EC-75, "VIN Registration".
3. Perform EC-76, "Accelerator Pedal Released Position Learning".
4. Perform EC-76, "Throttle Valve Closed Position Learning".
5. Perform EC-76, "Idle Air Volume Learning".

VIN Registration

INFOID:0000000001702581

DESCRIPTION

VIN Registration is an operation to registering VIN in ECM. It must be performed each time ECM is replaced.

NOTE:

Accurate VIN which is registered in ECM may be required for Inspection & Maintenance (I/M).

OPERATION PROCEDURE

With CONSULT-II

1. Check the VIN of the vehicle and note it. Refer to GI-43.
2. Turn ignition switch ON and engine stopped.
3. Select “VIN REGISTRATION” in “WORK SUPPORT” mode.
4. Follow the instruction of CONSULT-II display.

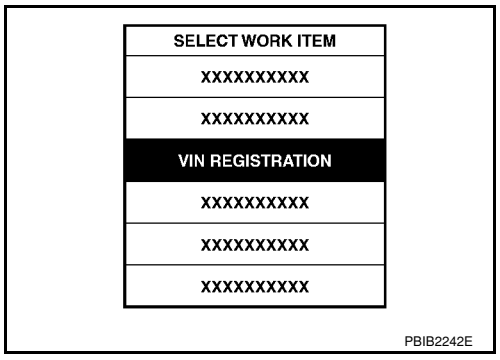

Accelerator Pedal Released Position Learning

INFOID:0000000001702582

DESCRIPTION

Accelerator Pedal Released Position Learning is an operation to learn the fully released position of the accelerator pedal by monitoring the accelerator pedal position sensor output signal. It must be performed each time harness connector of accelerator pedal position sensor or ECM is disconnected.

OPERATION PROCEDURE

1. Make sure that accelerator pedal is fully released.
2. Turn ignition switch ON and wait at least 2 seconds.
3. Turn ignition switch OFF and wait at least 10 seconds.
4. Turn ignition switch ON and wait at least 2 seconds.
5. Turn ignition switch OFF and wait at least 10 seconds.

Throttle Valve Closed Position Learning

INFOID:0000000001702583

DESCRIPTION

Throttle Valve Closed Position Learning is an operation to learn the fully closed position of the throttle valve by monitoring the throttle position sensor output signal. It must be performed each time harness connector of electric throttle control actuator or ECM is disconnected.

OPERATION PROCEDURE

1. Make sure that accelerator pedal is fully released.
2. Turn ignition switch ON.
3. Turn ignition switch OFF and wait at least 10 seconds.
   Make sure that throttle valve moves during above 10 seconds by confirming the operating sound.

Idle Air Volume Learning

INFOID:0000000001702584

DESCRIPTION

Idle Air Volume Learning is an operation to learn the idle air volume that keeps each engine within the specific range. It must be performed under any of the following conditions:

- Each time electric throttle control actuator or ECM is replaced.
- Idle speed or ignition timing is out of specification.

PREPARATION

Before performing Idle Air Volume Learning, make sure that all of the following conditions are satisfied.
Learning will be cancelled if any of the following conditions are missed for even a moment.

- Battery voltage: More than 12.9V (At idle)
- Engine coolant temperature: 70 - 95°C (158 - 203°F)
- Park/neutral position (PNP) switch: ON
- Electric load switch: OFF
  [Air conditioner, headlamp, rear window defogger]
  On vehicles equipped with daytime light systems, if the parking brake is applied before the engine is started the headlamp will not be illuminated.
- Steering wheel: Neutral (Straight-ahead position)
- Vehicle speed: Stopped
- Transmission: Warmed-up
- Models with CONSULT-II (A/T and CVT models)
- Drive vehicle until “FLUID TEMP SE” in “DATA MONITOR” mode of “A/T” or “CVT” system indicates less than 0.9V.
- Models without CONSULT-II (A/T and CVT models) and M/T models
- Drive vehicle for 10 minutes.

OPERATION PROCEDURE

With CONSULT-II

1. Perform EC-76, "Accelerator Pedal Released Position Learning".
2. Perform EC-76, "Throttle Valve Closed Position Learning".

3. Start engine and warm it up to normal operating temperature.
4. Check that all items listed under the topic PREPARATION (previously mentioned) are in good order.
5. Select “IDLE AIR VOL LEARN” in “WORK SUPPORT” mode.

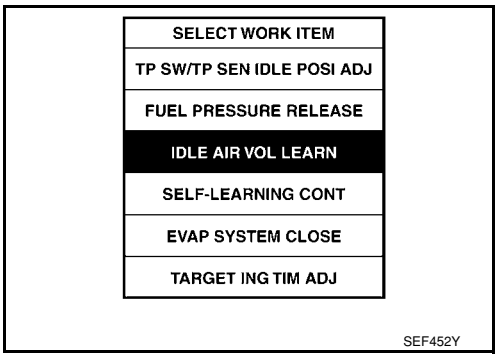

6. Touch “START” and wait 20 seconds.

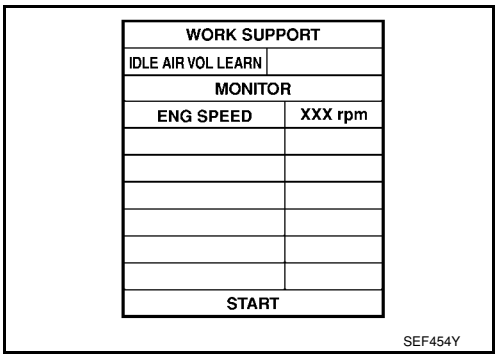

7. Make sure that “CMPLT” is displayed on CONSULT-II screen. If “CMPLT” is not displayed, Idle Air Volume Learning will not be carried out successfully. In this case, find the cause of the incident by referring to the DIAGNOSTIC PROCEDURE below.
8. Rev up the engine two or three times and make sure that idle speed and ignition timing are within the specifications.
   Refer to EC-69, "Basic Inspection".

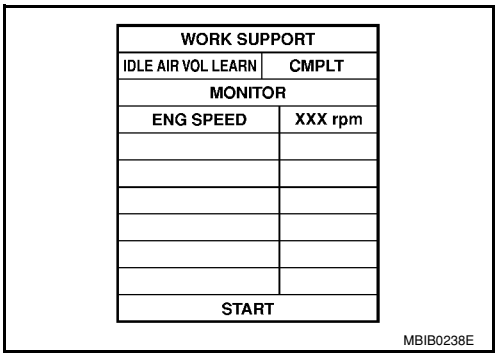

ITEM	SPECIFICATION
Idle speed	M/T: 700 ± 50 rpm (in Neutral position) A/T: 700 ± 50 rpm (in P or N position) CVT: 700 ± 50 rpm (in P or N position)
Ignition timing	M/T: 13 ± 5° BTDC (in Neutral position) A/T: 13 ± 5° BTDC (in P or N position) CVT: 13 ± 5° BTDC (in P or N position)

Without CONSULT-II

NOTE:
- **It is better to count the time accurately with a clock.**
- **It is impossible to switch the diagnostic mode when an accelerator pedal position sensor circuit has a malfunction.**

1. Perform EC-76, "Accelerator Pedal Released Position Learning".
2. Perform EC-76, "Throttle Valve Closed Position Learning".
3. Start engine and warm it up to normal operating temperature.
4. Check that all items listed under the topic PREPARATION (previously mentioned) are in good order.
5. Turn ignition switch OFF and wait at least 10 seconds.
6. Confirm that accelerator pedal is fully released, turn ignition switch ON and wait 3 seconds.
7. Repeat the following procedure quickly five times within 5 seconds.

a. Fully depress the accelerator pedal.

b. Fully release the accelerator pedal.
8. Wait 7 seconds, fully depress the accelerator pedal and keep it for approx. 20 seconds until the MIL stops blinking and turned ON.
9. Fully release the accelerator pedal within 3 seconds after the MIL turned ON.
10. Start engine and let it idle.
11. Wait 20 seconds.

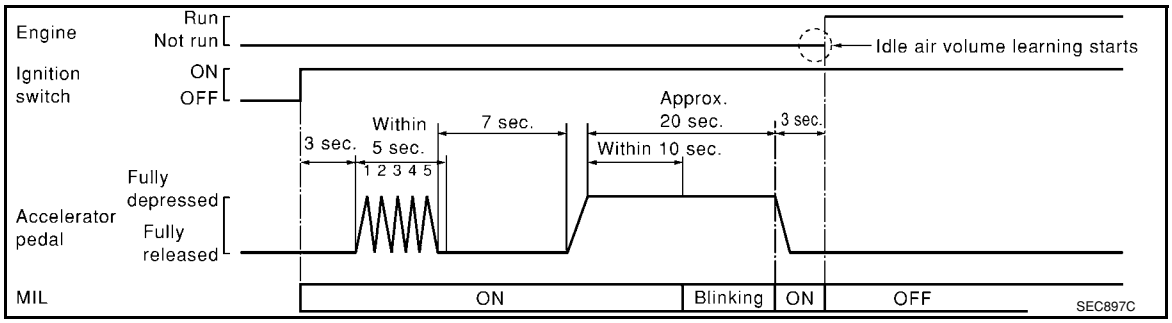

12. Rev up the engine two or three times and make sure that idle speed and ignition timing are within the specifications. Refer to EC-69, "Basic Inspection".

ITEM	SPECIFICATION
Idle speed	M/T: 700 ± 50 rpm (in Neutral position) A/T: 700 ± 50 rpm (in P or N position) CVT: 700 ± 50 rpm (in P or N position)
Ignition timing	M/T: 13 ± 5° BTDC (in Neutral position) A/T: 13 ± 5° BTDC (in P or N position) CVT: 13 ± 5° BTDC (in P or N position)

13. If idle speed and ignition timing are not within the specification, Idle Air Volume Learning will not be carried out successfully. In this case, find the cause of the incident by referring to the DIAGNOSTIC PROCEDURE below.

DIAGNOSTIC PROCEDURE

If idle air volume learning cannot be performed successfully, proceed as follows:

1. **Check that throttle valve is fully closed.**
2. **Check PCV valve operation.**
3. **Check that downstream of throttle valve is free from air leakage.**
4. **When the above three items check out OK, engine component parts and their installation condition are questionable. Check and eliminate the cause of the incident.**
   It is useful to perform EC-127.
5. **If any of the following conditions occur after the engine has started, eliminate the cause of the incident and perform Idle Air Volume Learning all over again:**

- **Engine stalls.**
- **Erroneous idle.**

Fuel Pressure Check

INFOID:0000000001702585

FUEL PRESSURE RELEASE

With CONSULT-II

1. Turn ignition switch ON.

2. Perform “FUEL PRESSURE RELEASE” in “WORK SUPPORT” mode with CONSULT-II.
3. Start engine.
4. After engine stalls, crank it two or three times to release all fuel pressure.
5. Turn ignition switch OFF.

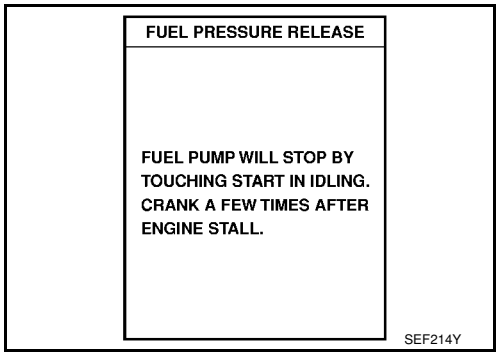

Without CONSULT-II

1. Remove fuel pump fuse (1) located in IPDM E/R (2).
   - ⇦: Vehicle front
2. Start engine.
3. After engine stalls, crank it two or three times to release all fuel pressure.
4. Turn ignition switch OFF.
5. Reinstall fuel pump fuse after servicing fuel system.

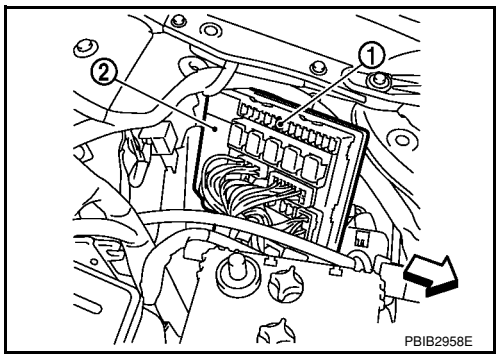

FUEL PRESSURE CHECK

CAUTION:

Before disconnecting fuel line, release fuel pressure from fuel line to eliminate danger.

NOTE:

- **Prepare pans or saucers under the disconnected fuel line because the fuel may spill out. The fuel pressure cannot be completely released because C11 models do not have fuel return system.**
- **The fuel hose connection method used when taking fuel pressure check must not be used for other purposes.**
- **Be careful not to scratch or put debris around connection area when servicing, so that the quick connector maintains sealability with O-rings inside.**
- **Do not perform fuel pressure check with electrical systems operating (i.e. lights, rear defogger, A/C, etc.) Fuel pressure gauge may indicate false readings due to varying engine load and changes in manifold vacuum.**

1. Release fuel pressure to zero. Refer to "FUEL PRESSURE RELEASE".
2. Prepare fuel hose for fuel pressure check B and fuel tube adapter (KV10118400) D, then connect fuel pressure gauge A.
   - ⇦: To quick connector
   - ⬅: To fuel tube (engine side)
   - C: Clamp
   - Use suitable fuel hose for fuel pressure check (genuine NISSAN fuel hose without quick connector).
   - To avoid unnecessary force or tension to hose, use moderately long fuel hose for fuel pressure check.
   - Do not use the fuel hose for checking fuel pressure with damage or cracks on it.
   - Use Pressure Gauge to check fuel pressure.
3. Remove fuel hose. Refer to EM-18.
   - Do not twist or kink fuel hose because it is plastic hose.

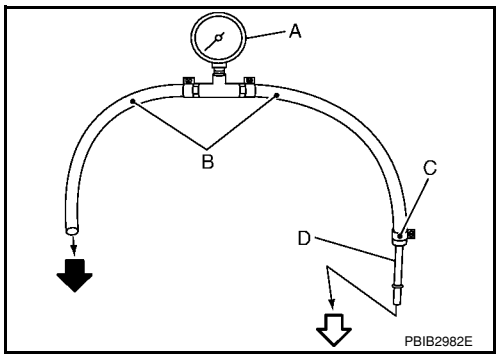

4. Connect fuel hose for fuel pressure check (1) to fuel tube (engine side) with clamp (2) as shown in the figure.
   - No.2 spool (5)
   - Wipe off oil or dirt from hose insertion part using cloth moistened with gasoline.
   - Apply proper amount of gasoline between top of the fuel tube (3) and No.1 spool (4).
   - Insert fuel hose for fuel pressure check until it touches the No.1 spool on fuel tube.
   - Use NISSAN genuine hose clamp (part number: 16439 N4710 or 16439 40U00).
   - When reconnecting fuel line, always use new clamps.
   - Use a torque driver to tighten clamps.
   - Install hose clamp to the position within 1 - 2 mm (0.04 - 0.08 in).

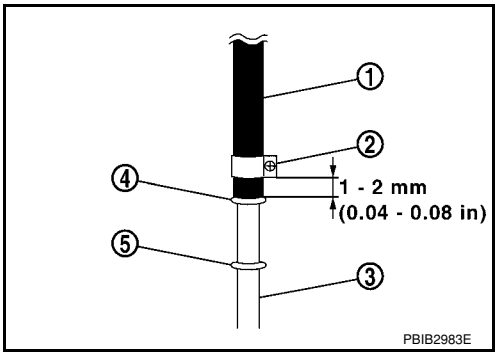

Tightening torque: 1 - 1.5 N·m (0.1 - 0.15 kg-m, 9 - 13 in-lb)

   - Make sure that clamp screw does not contact adjacent parts.
5. Connect fuel tube adapter to quick connector.
   - A: Fuel pressure gauge
   - B: Fuel hose for fuel pressure check
6. After connecting fuel hose for fuel pressure check, pull the hose with a force of approximately 98 N (10 kg, 22 lb) to confirm fuel tube does not come off.
7. Turn ignition switch ON and check for fuel leakage.
8. Start engine and check for fuel leakage.
9. Read the indication of fuel pressure gauge.
   - Do not perform fuel pressure check with system operating. Fuel pressure gauge may indicate false readings.
   - During fuel pressure check, confirm for fuel leakage from fuel connection every 3 minutes.

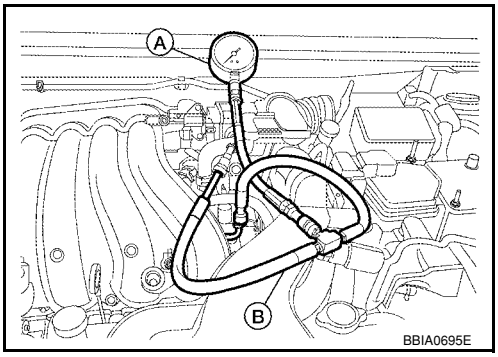

At idling: Approximately 350 kPa (3.57 kg/cm^2, 51 psi)

10. If result is unsatisfactory, go to next step.
11. Check the following.
    - Fuel hoses and fuel tubes for clogging
    - Fuel filter for clogging
    - Fuel pump
    - Fuel pressure regulator for clogging

    If OK, replace fuel pressure regulator.
    If NG, repair or replace.
12. Check the following.
    - Fuel hoses and fuel tubes for clogging
    - Fuel filter for clogging
    - Fuel pump
    - Fuel pressure regulator for clogging

    If OK, replace fuel pressure regulator.
    If NG, repair or replace.
13. Before disconnecting Fuel Pressure Gauge and Fuel Pressure Adapter J-44321-6, release fuel pressure to zero. Refer to "FUEL PRESSURE RELEASE".

TROUBLE DIAGNOSIS

Trouble Diagnosis Introduction

INFOID:0000000001702586

INTRODUCTION

The engine has an ECM to control major systems such as fuel control, ignition control, idle air control system, etc. The ECM accepts input signals from sensors and instantly drives actuators. It is essential that both input and output signals are proper and stable. At the same time, it is important that there are no malfunctions such as vacuum leaks, fouled spark plugs, or other malfunctions with the engine.

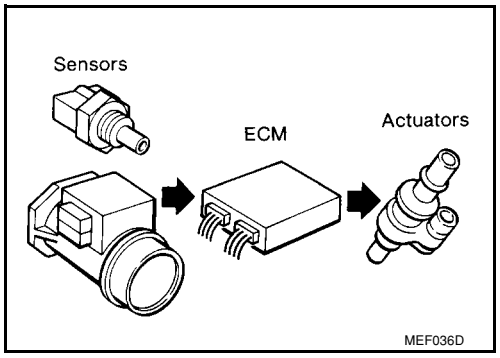

It is much more difficult to diagnose an incident that occurs intermittently rather than continuously. Most intermittent incidents are caused by poor electric connections or improper wiring. In this case, careful checking of suspected circuits may help prevent the replacement of good parts.

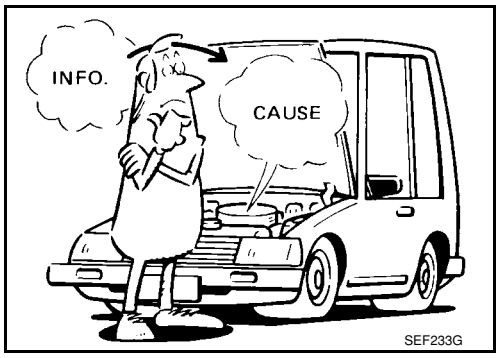

A visual check only may not find the cause of the incidents. A road test with CONSULT-II (or GST) or a circuit tester connected should be performed. Follow the Work Flow on "WORK FLOW".
Before undertaking actual checks, take a few minutes to talk with a customer who approaches with a driveability complaint. The customer can supply good information about such incidents, especially intermittent ones. Find out what symptoms are present and under what conditions they occur. A Diagnostic Worksheet like the example on "Worksheet Sample" should be used.
Start your diagnosis by looking for conventional malfunctions first. This will help troubleshoot driveability malfunctions on an electronically controlled engine vehicle.

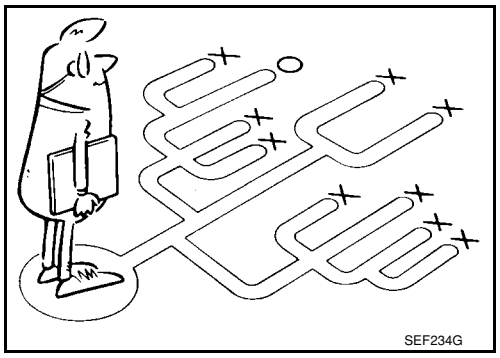

WORK FLOW

Overall Sequence

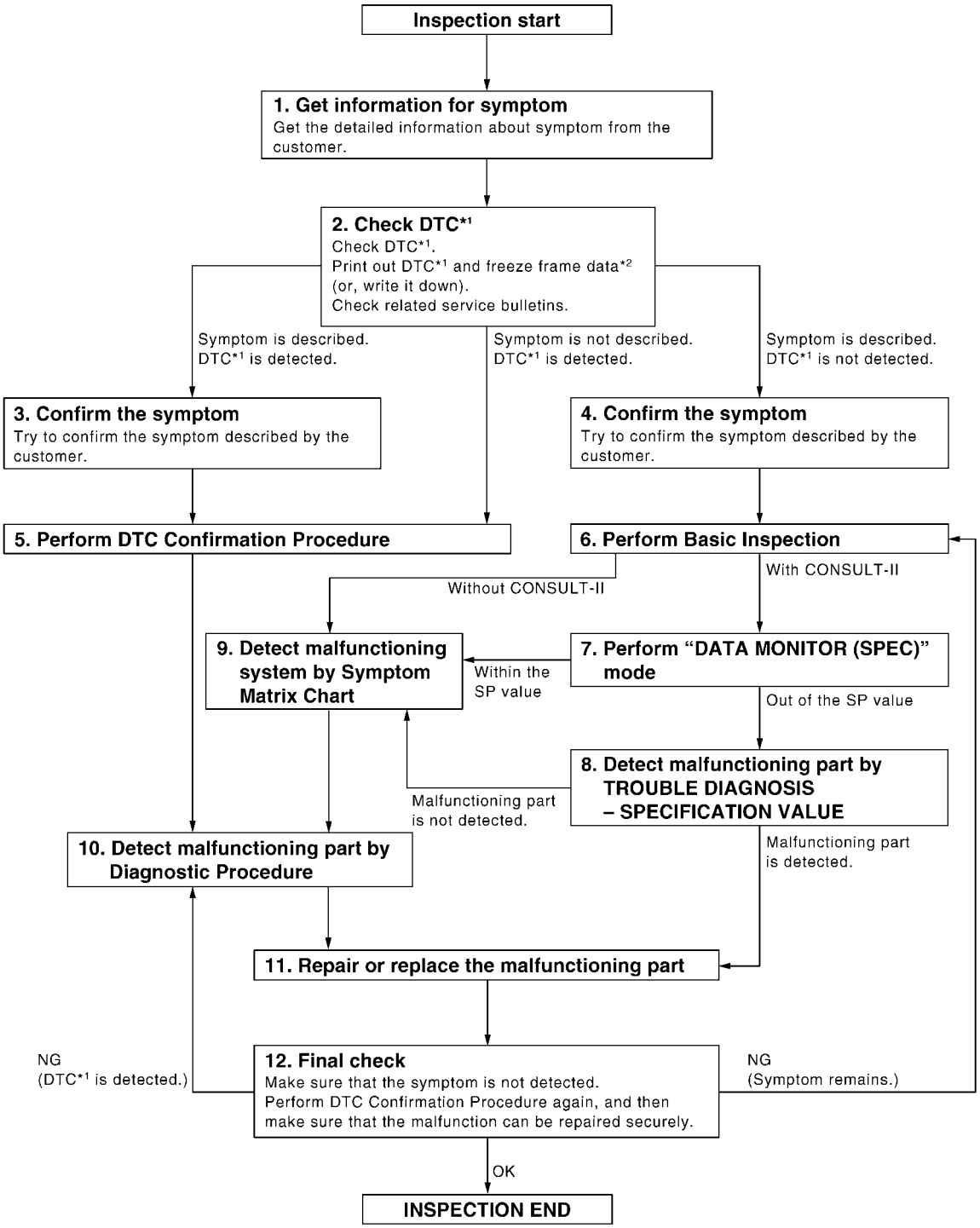

*1: Include 1st trip DTC.
*2: Include 1st trip freeze frame data.

PBIB2267E

Detailed Flow

1.GET INFORMATION FOR SYMPTOM

Get the detailed information from the customer about the symptom (the condition and the environment when the incident/malfunction occurred) using the "DIAGNOSTIC WORKSHEET".

>> GO TO 2.

2. CHECK DTC*1

1. Check DTC*1.
2. Perform the following procedure if DTC*1 is displayed.
- Record DTC*1 and freeze frame data*2. (Print them out with CONSULT-II or GST.)
- Erase DTC*1. (Refer to EC-47, "Emission-related Diagnostic Information")
- Study the relationship between the cause detected by DTC*1 and the symptom described by the customer. (Symptom Matrix Chart is useful. Refer to EC-88, "Symptom Matrix Chart".)
3. Check related service bulletins for information.

Is any symptom described and any DTC detected?

Symptom is described, DTC*1 is displayed>>GO TO 3.
Symptom is described, DTC*1 is not displayed>>GO TO 4.
Symptom is not described, DTC*1 is displayed>>GO TO 5.

3. CONFIRM THE SYMPTOM

Try to confirm the symptom described by the customer (except MIL ON).
DIAGNOSIS WORK SHEET is useful to verify the incident.
Connect CONSULT-II to the vehicle in “DATA MONITOR (AUTO TRIG)” mode and check real time diagnosis results.
Verify relation between the symptom and the condition when the symptom is detected.

>> GO TO 5.

4. CONFIRM THE SYMPTOM

Try to confirm the symptom described by the customer.
DIAGNOSIS WORK SHEET is useful to verify the incident.
Connect CONSULT-II to the vehicle in “DATA MONITOR (AUTO TRIG)” mode and check real time diagnosis results.
Verify relation between the symptom and the condition when the symptom is detected.

>> GO TO 6.

5. PERFORM DTC CONFIRMATION PROCEDURE

Perform DTC Confirmation Procedure for the displayed DTC*1, and then make sure that DTC*1 is detected again.
At this time, always connect CONSULT-II to the vehicle, and check diagnostic results in real time on “DATA MONITOR (AUTO TRIG)”.
If two or more DTCs*1 are detected, refer to EC-86, "DTC Inspection Priority Chart" and determine trouble diagnosis order.

NOTE:

- Freeze frame data*2 is useful if the DTC*1 is not detected.
- Perform Overall Function Check if DTC Confirmation Procedure is not included on Service Manual. This simplified check procedure is an effective alternative though DTC*1 cannot be detected during this check.
  If the result of Overall Function Check is NG, it is the same as the detection of DTC*1 by DTC Confirmation Procedure.

Is DTC*1 detected?

Yes >> GO TO 10.
No >> Check according to EC-136.

6. PERFORM BASIC INSPECTION

Perform EC-69, "Basic Inspection".

With CONSULT-II>>GO TO 7.
Without CONSULT-II>>GO TO 9.

7. PERFORM DATA MONITOR (SPEC) MODE

With CONSULT-II
Make sure that “MAS A/F SE-B1”, “B/FUEL SCHDL”, and “A/F ALPHA-B1” are within the SP value using CONSULT-II “DATA MONITOR (SPEC)” mode. Refer to EC-127, "Inspection Procedure".

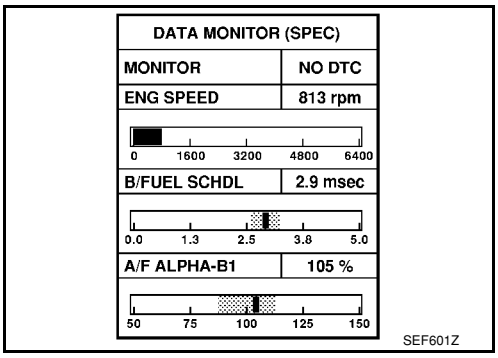

Are they within the SP value?

Yes >> GO TO 9.
No >> GO TO 8.

8. DETECT MALFUNCTIONING PART BY TROUBLE DIAGNOSIS - SPECIFICATION VALUE

Detect malfunctioning part according to EC-127, "Diagnosis Procedure".

Is malfunctioning part detected?

Yes >> GO TO 11.
No >> GO TO 9.

9. DETECT MALFUNCTIONING SYSTEM BY SYMPTOM MATRIX CHART

Detect malfunctioning system according to EC-88, "Symptom Matrix Chart" based on the confirmed symptom in step 4, and determine the trouble diagnosis order based on possible causes and symptom.

>> GO TO 10.

10. DETECT MALFUNCTIONING PART BY DIAGNOSTIC PROCEDURE

Inspect according to Diagnostic Procedure of the system.

NOTE:
The Diagnostic Procedure in EC section described based on open circuit inspection. A short circuit inspection is also required for the circuit check in the Diagnostic Procedure. For details, refer to Circuit Inspection in GI-25, "How to Perform Efficient Diagnosis for an Electrical Incident".

Is malfunctioning part detected?

Yes >> GO TO 11.
No >> Monitor input data from related sensors or check voltage of related ECM terminals using CONSULT-II. Refer to EC-102, "ECM Terminal and Reference Value", EC-121, "CONSULT-II Reference Value in Data Monitor Mode".

11. REPAIR OR REPLACE THE MALFUNCTIONING PART

1. Repair or replace the malfunctioning part.
2. Reconnect parts or connectors disconnected during Diagnostic Procedure again after repair and replacement.
3. Check DTC. If DTC is displayed, erase it, refer to EC-47, "Emission-related Diagnostic Information".

>> GO TO 12.

12. FINAL CHECK

When DTC was detected in step 2, perform DTC Confirmation Procedure or Overall Function Check again, and then make sure that the malfunction have been repaired securely.
When symptom was described from the customer, refer to confirmed symptom in step 3 or 4, and make sure that the symptom is not detected.

OK or NG

NG (DTC*1 is detected)>>GO TO 10.
NG (Symptom remains)>>GO TO 6.
OK >> 1. Before returning the vehicle to the customer, make sure to erase unnecessary DTC*1 in ECM and TCM (Transmission Control Module). (Refer to EC-47, "Emission-related Diagnostic

Information" and AT-36, "OBD-II Diagnostic Trouble Code (DTC)", CVT-26, "OBD-II Diagnostic Trouble Code (DTC)".)

2. If the completion of SRT is needed, drive vehicle under the specific driving pattern. Refer to EC-47, "Emission-related Diagnostic Information".
3. **INSPECTION END**

*1: Include 1st trip DTC.
*2: Include 1st trip freeze frame data.

DIAGNOSTIC WORKSHEET

Description

There are many operating conditions that lead to the malfunction of engine components. A good grasp of such conditions can make troubleshooting faster and more accurate.

In general, each customer feels differently about a incident. It is important to fully understand the symptoms or conditions for a customer complaint.

Utilize a diagnostic worksheet like the one on the next page in order to organize all the information for troubleshooting.

Some conditions may cause the MIL to come on steady or blink and DTC to be detected. Examples:

- Vehicle ran out of fuel, which caused the engine to misfire.
- Fuel filler cap was left off or incorrectly screwed on, allowing fuel to evaporate into the atmosphere.

KEY POINTS

WHAT ..... Vehicle & engine model
WHEN ..... Date, Frequencies
WHERE..... Road conditions
HOW ..... Operating conditions, Weather conditions, Symptoms

SEF907L

Worksheet Sample

Customer name MR/MS		Model & Year	VIN
Engine #		Trans.	Mileage
Incident Date		Manuf. Date	In Service Date
Fuel and fuel filler cap		☐ Vehicle ran out of fuel causing misfire ☐ Fuel filler cap was left off or incorrectly screwed on.	
Symptoms	☐ Startability	☐ Impossible to start ☐ No combustion ☐ Partial combustion ☐ Partial combustion affected by throttle position ☐ Partial combustion NOT affected by throttle position ☐ Possible but hard to start ☐ Others [ ]	
	☐ Idling	☐ No fast idle ☐ Unstable ☐ High idle ☐ Low idle ☐ Others [ ]	
	☐ Driveability	☐ Stumble ☐ Surge ☐ Knock ☐ Lack of power ☐ Intake backfire ☐ Exhaust backfire ☐ Others [ ]	
	☐ Engine stall	☐ At the time of start ☐ While idling ☐ While accelerating ☐ While decelerating ☐ Just after stopping ☐ While loading	
Incident occurrence		☐ Just after delivery ☐ Recently ☐ In the morning ☐ At night ☐ In the daytime	
Frequency		☐ All the time ☐ Under certain conditions ☐ Sometimes	
Weather conditions		☐ Not affected	
	Weather	☐ Fine ☐ Raining ☐ Snowing ☐ Others [ ]	
	Temperature	☐ Hot ☐ Warm ☐ Cool ☐ Cold ☐ Humid °F	
Engine conditions		☐ Cold ☐ During warm-up ☐ After warm-up Engine speed 0 2,000 4,000 6,000 8,000 rpm	
Road conditions		☐ In town ☐ In suburbs ☐ Highway ☐ Off road (up/down)	
Driving conditions		☐ Not affected ☐ At starting ☐ While idling ☐ At racing ☐ While accelerating ☐ While cruising ☐ While decelerating ☐ While turning (RH/LH) Vehicle speed 0 10 20 30 40 50 60 MPH	
Malfunction indicator lamp		☐ Turned on ☐ Not turned on	

MTBL0017

DTC Inspection Priority Chart

INFOID:0000000001702587

If some DTCs are displayed at the same time, perform inspections one by one based on the following priority chart.

NOTE:

- **If DTC U1000 or U1001 is displayed with other DTC, first perform the trouble diagnosis for DTC U1000, U1001. Refer to EC-143.**
- **If DTC U1010 is displayed with other DTC, first perform the trouble diagnosis for DTC U1010. Refer to EC-145.**

Priority	Detected items (DTC)
1	• U1000 U1001 CAN communication line • U1010 CAN communication • P0101 P0102 P0103 Mass air flow sensor • P0112 P0113 P0127 Intake air temperature sensor • P0117 P0118 P0125 Engine coolant temperature sensor • P0122 P0123 P0222 P0223 P1225 P1226 P2135 Throttle position sensor • P0128 Thermostat function • P0181 P0182 P0183 Fuel tank temperature sensor • P0327 P0328 Knock sensor • P0335 Crankshaft position sensor (POS) • P0340 Camshaft position sensor (PHASE) • P0460 P0461 P0462 P0463 Fuel level sensor • P0500 Vehicle speed sensor • P0605 ECM • P0643 Sensor power supply • P0705 P0850 Park/neutral position (PNP) switch • P1610 - P1615 NATS • P2122 P2123 P2127 P2128 P2138 Accelerator pedal position sensor
2	• P0031 P0032 Air fuel ratio (A/F) sensor 1 heater • P0037 P0038 Heated oxygen sensor 2 heater • P0075 Intake valve timing control solenoid valve • P0130 P0131 P0132 P0133 P2A00 Air fuel ratio (A/F) sensor 1 • P0137 P0138 P0139 Heated oxygen sensor 2 • P0441 EVAP control system purge flow monitoring • P0443 P0444 P0445 EVAP canister purge volume control solenoid valve • P0447 P0448 EVAP canister vent control valve • P0451 P0452 P0453 EVAP control system pressure sensor • P1217 Engine over temperature (OVERHEAT) • P1805 Brake switch • P2100 P2103 Throttle control motor relay • P2101 Electric throttle control function • P2118 Throttle control motor
3	• P0011 Intake valve timing control • P0171 P0172 Fuel injection system function • P0300 - P0304 Misfire • P0420 Three way catalyst function • P0442 P0456 EVAP control system (SMALL LEAK, VERY SMALL LEAK) • P0455 EVAP control system (GROSS LEAK) • P0506 P0507 Idle speed control system • P0710 P0715 P0720 P0725 P0731 P0732 P0733 P0734 P0740 P0744 P0745 P0746 P0750 P0755 P0776 P0778 P0840 P0845 P1705 P1740 P1760 P1777 P1778 A/T or CVT related sensors, solenoid valves and switches • P1148 Closed loop control • P1421 Cold start control • P1564 ASCD steering switch • P1572 ASCD brake switch • P1574 ASCD vehicle speed sensor • P1715 Turbine revolution sensor (A/T), Primary speed sensor (CVT) • P2119 Electric throttle control actuator

Fail-Safe Chart

INFOID:0000000001702588

When the DTC listed below is detected, the ECM enters fail-safe mode and the MIL lights up.

DTC No.	Detected items	Engine operating condition in fail-safe mode
P0102 P0103	Mass air flow sensor circuit	Engine speed will not rise more than 2,400 rpm due to the fuel cut.

DTC No.	Detected items	Engine operating condition in fail-safe mode	
P0117 P0118	Engine coolant temperature sensor circuit	Engine coolant temperature will be determined by ECM based on the time after turning ignition switch ON or START. CONSULT-II displays the engine coolant temperature decided by ECM.	
		Condition	Engine coolant temperature decided (CONSULT-II display)
		Just as ignition switch is turned ON or START	40°C (104°F)
		More than approx. 4 minutes after ignition ON or START	80°C (176°F)
		Except as shown above	40 - 80°C (104 - 176°F) (Depends on the time)
		When the fail-safe system for engine coolant temperature sensor is activated, the cooling fan operates while engine is running.	
P0122 P0123 P0222 P0223 P2135	Throttle position sensor	The ECM controls the electric throttle control actuator in regulating the throttle opening in order for the idle position to be within +10 degrees. The ECM regulates the opening speed of the throttle valve to be slower than the normal condition. So, the acceleration will be poor.	
P0643	Sensor power supply	ECM stops the electric throttle control actuator control, throttle valve is maintained at a fixed opening (approx. 5 degrees) by the return spring.	
P2100 P2103	Throttle control relay	ECM stops the electric throttle control actuator control, throttle valve is maintained at a fixed opening (approx. 5 degrees) by the return spring.	
P2101	Electric throttle control function	ECM stops the electric throttle control actuator control, throttle valve is maintained at a fixed opening (approx. 5 degrees) by the return spring.	
P2118	Throttle control motor	ECM stops the electric throttle control actuator control, throttle valve is maintained at a fixed opening (approx. 5 degrees) by the return spring.	
P2119	Electric throttle control actuator	(When electric throttle control actuator does not function properly due to the return spring malfunction:) ECM controls the electric throttle actuator by regulating the throttle opening around the idle position. The engine speed will not rise more than 2,000 rpm.	
		(When throttle valve opening angle in fail-safe mode is not in specified range:) ECM controls the electric throttle control actuator by regulating the throttle opening to 20 degrees or less.	
		(When ECM detects the throttle valve is stuck open:) While the vehicle is driving, it slows down gradually by fuel cut. After the vehicle stops, the engine stalls. The engine can restart in N or P (A/T, CVT), Neutral (M/T) position, and engine speed will not exceed 1,000 rpm or more.	
P2122 P2123 P2127 P2128 P2138	Accelerator pedal position sensor	The ECM controls the electric throttle control actuator in regulating the throttle opening in order for the idle position to be within +10 degrees. The ECM regulates the opening speed of the throttle valve to be slower than the normal condition. So, the acceleration will be poor.	

- When there is an open circuit on MIL circuit, the ECM cannot warn the driver by lighting up MIL when there is malfunction on engine control system.
  Therefore, when electrical controlled throttle and part of ECM related diagnoses are continuously detected as NG for 5 trips, ECM warns the driver that engine control system malfunctions and MIL circuit is open by means of operating fail-safe function.
  The fail-safe function also operates when above diagnoses except MIL circuit are detected and demands the driver to repair the malfunction.

Engine operating condition in fail-safe mode	Engine speed will not rise more than 2,500 rpm due to the fuel cut

Symptom Matrix Chart

INFOID:0000000001702589

SYSTEM — BASIC ENGINE CONTROL SYSTEM

		SYMPTOM													Reference page
		HARD/NO START/RESTART (EXCP. HA)	ENGINE STALL	HESITATION/SURGING/FLAT SPOT	SPARK KNOCK/DETONATION	LACK OF POWER/POOR ACCELERATION	HIGH IDLE/LOW IDLE	ROUGH IDLE/HUNTING	IDLING VIBRATION	SLOW/NO RETURN TO IDLE	OVERHEATS/WATER TEMPERATURE HIGH	EXCESSIVE FUEL CONSUMPTION	EXCESSIVE OIL CONSUMPTION	BATTERY DEAD (UNDER CHARGE)	
Warranty symptom code		AA	AB	AC	AD	AE	AF	AG	AH	AJ	AK	AL	AM	HA	
Fuel	Fuel pump circuit	1	1	2	3	2		2	2			3		2	EC-526
	Fuel pressure regulator system	3	3	4	4	4	4	4	4	4		4			EC-78
	Fuel injector circuit	1	1	2	3	2		2	2			2			EC-521
	Evaporative emission system	3	3	4	4	4	4	4	4	4		4			EC-31
Air	Positive crankcase ventilation system	3	3	4	4	4	4	4	4	4		4	1		EC-43
	Incorrect idle speed adjustment						1	1	1	1		1			EC-69
	Electric throttle control actuator	1	1	2	3	3	2	2	2	2		2		2	EC-461, EC-472
Ignition	Incorrect ignition timing adjustment	3	3	1	1	1		1	1			1			EC-69
	Ignition circuit	1	1	2	2	2		2	2			2			EC-531
Main power supply and ground circuit		2	2	3	3	3		3	3		2	3			EC-137
Mass air flow sensor circuit		1	1	2	2	2		2	2			2			EC-167, EC-175
Engine coolant temperature sensor circuit					3		3			3					EC-187, EC-198
Air fuel ratio (A/F) sensor 1 circuit															EC-206, EC-213, EC-219, EC-225, EC-500
Throttle position sensor circuit							2			2					EC-192, EC-278, EC-426, EC-428, EC-487
Accelerator pedal position sensor circuit				3	2	1									EC-400, EC-474, EC-480, EC-493
Knock sensor circuit				2								3			EC-291
Crankshaft position sensor (POS) circuit		2	2												EC-295
Camshaft position sensor (PHASE) circuit		3	2												EC-302
Vehicle speed signal circuit			2	3		3						3			EC-391
ECM		2	2	3	3	3	3	3	3	3	3	3			EC-397

	SYMPTOM													Reference page
	HARD/NO START/RESTART (EXCP. HA)	ENGINE STALL	HESITATION/SURGING/FLAT SPOT	SPARK KNOCK/DETONATION	LACK OF POWER/POOR ACCELERATION	HIGH IDLE/LOW IDLE	ROUGH IDLE/HUNTING	IDLING VIBRATION	SLOW/NO RETURN TO IDLE	OVERHEATS/WATER TEMPERATURE HIGH	EXCESSIVE FUEL CONSUMPTION	EXCESSIVE OIL CONSUMPTION	BATTERY DEAD (UNDER CHARGE)	
Warranty symptom code	AA	AB	AC	AD	AE	AF	AG	AH	AJ	AK	AL	AM	HA	
Intake valve timing control solenoid valve circuit		3	2		1	3	2	2	3		3			EC-162
Park/neutral position (PNP) switch circuit			3		3		3	3			3			EC-405
Refrigerant pressure sensor circuit		2				3			3		4			EC-541
Electrical load signal circuit							3							EC-519
Air conditioner circuit	2	2	3	3	3	3	3	3	3		3		2	MTC-22
ABS actuator and electric unit (control unit)			4											BRC-8

1 - 6: The numbers refer to the order of inspection.

(continued on next page)

SYSTEM — ENGINE MECHANICAL & OTHER

		SYMPTOM													Reference page
		HARD/NO START/RESTART (EXCP. HA)	ENGINE STALL	HESITATION/SURGING/FLAT SPOT	SPARK KNOCK/DETONATION	LACK OF POWER/POOR ACCELERATION	HIGH IDLE/LOW IDLE	ROUGH IDLE/HUNTING	IDLING VIBRATION	SLOW/NO RETURN TO IDLE	OVERHEATS/WATER TEMPERATURE HIGH	EXCESSIVE FUEL CONSUMPTION	EXCESSIVE OIL CONSUMPTION	BATTERY DEAD (UNDER CHARGE)	
Warranty symptom code		AA	AB	AC	AD	AE	AF	AG	AH	AJ	AK	AL	AM	HA	
Fuel	Fuel tank	5	5												FL-9
	Fuel piping			5	5	5		5	5			5			EM-33
	Vapor lock														—
	Valve deposit	5		5	5	5		5	5			5			—
	Poor fuel (Heavy weight gasoline, Low octane)														—

		SYMPTOM													Reference page
		HARD/NO START/RESTART (EXCP. HA)	ENGINE STALL	HESITATION/SURGING/FLAT SPOT	SPARK KNOCK/DETONATION	LACK OF POWER/POOR ACCELERATION	HIGH IDLE/LOW IDLE	ROUGH IDLE/HUNTING	IDLING VIBRATION	SLOW/NO RETURN TO IDLE	OVERHEATS/WATER TEMPERATURE HIGH	EXCESSIVE FUEL CONSUMPTION	EXCESSIVE OIL CONSUMPTION	BATTERY DEAD (UNDER CHARGE)	
Warranty symptom code		AA	AB	AC	AD	AE	AF	AG	AH	AJ	AK	AL	AM	HA	
Air	Air duct		5	5		5		5	5			5			EM-16
	Air cleaner														EM-16
	Air leakage from air duct (Mass air flow sensor — electric throttle control actuator)	5			5		5			5					EM-16
	Electric throttle control actuator														EM-18
	Air leakage from intake manifold/ Collector/Gasket														EM-18
Cranking	Battery	1	1	1		1		1	1			1		1	SC-4
	Generator circuit														SC-20
	Starter circuit	3													SC-8
	Signal plate	6													EM-76
	Park/neutral position (PNP) switch	4													MT-12, AT-86 or CVT-65
Engine	Cylinder head	5	5	5	5	5		5	5			5			EM-62
	Cylinder head gasket										4		3		
	Cylinder block	6	6	6	6	6		6	6			6	4		EM-76
	Piston														
	Piston ring														
	Connecting rod														
	Bearing														
	Crankshaft														
Valve mecha-nism	Timing chain	5	5	5	5	5		5	5			5			EM-37
	Camshaft														EM-47
	Intake valve timing control														EM-37
	Intake valve												3		EM-62
	Exhaust valve														
Exhaust	Exhaust manifold/Tube/Muffler/ Gasket	5	5	5	5	5		5	5			5			EM-21, EX-4
	Three way catalyst														
Lubrica-tion	Oil pan/Oil strainer/Oil pump/Oil filter/Oil gallery	5	5	5	5	5		5	5			5			EM-24, LU-9
	Oil level (Low)/Filthy oil														LU-6

		SYMPTOM													Reference page
		HARD/NO START/RESTART (EXCP. HA)	ENGINE STALL	HESITATION/SURGING/FLAT SPOT	SPARK KNOCK/DETONATION	LACK OF POWER/POOR ACCELERATION	HIGH IDLE/LOW IDLE	ROUGH IDLE/HUNTING	IDLING VIBRATION	SLOW/NO RETURN TO IDLE	OVERHEATS/WATER TEMPERATURE HIGH	EXCESSIVE FUEL CONSUMPTION	EXCESSIVE OIL CONSUMPTION	BATTERY DEAD (UNDER CHARGE)	
Warranty symptom code		AA	AB	AC	AD	AE	AF	AG	AH	AJ	AK	AL	AM	HA	
Cooling	Radiator/Hose/Radiator filler cap	5	5	5	5	5		5	5		4	5			CO-11
	Thermostat									5					CO-17
	Water pump														CO-16
	Water gallery														CO-7
	Cooling fan									5					CO-14
	Coolant level (Low)/Contaminated coolant														CO-8
NVIS (NISSAN Vehicle Immobilizer System-NATS)		1	1												BL-210

1 - 6: The numbers refer to the order of inspection.

Engine Control Component Parts Location

INFOID:0000000001702590

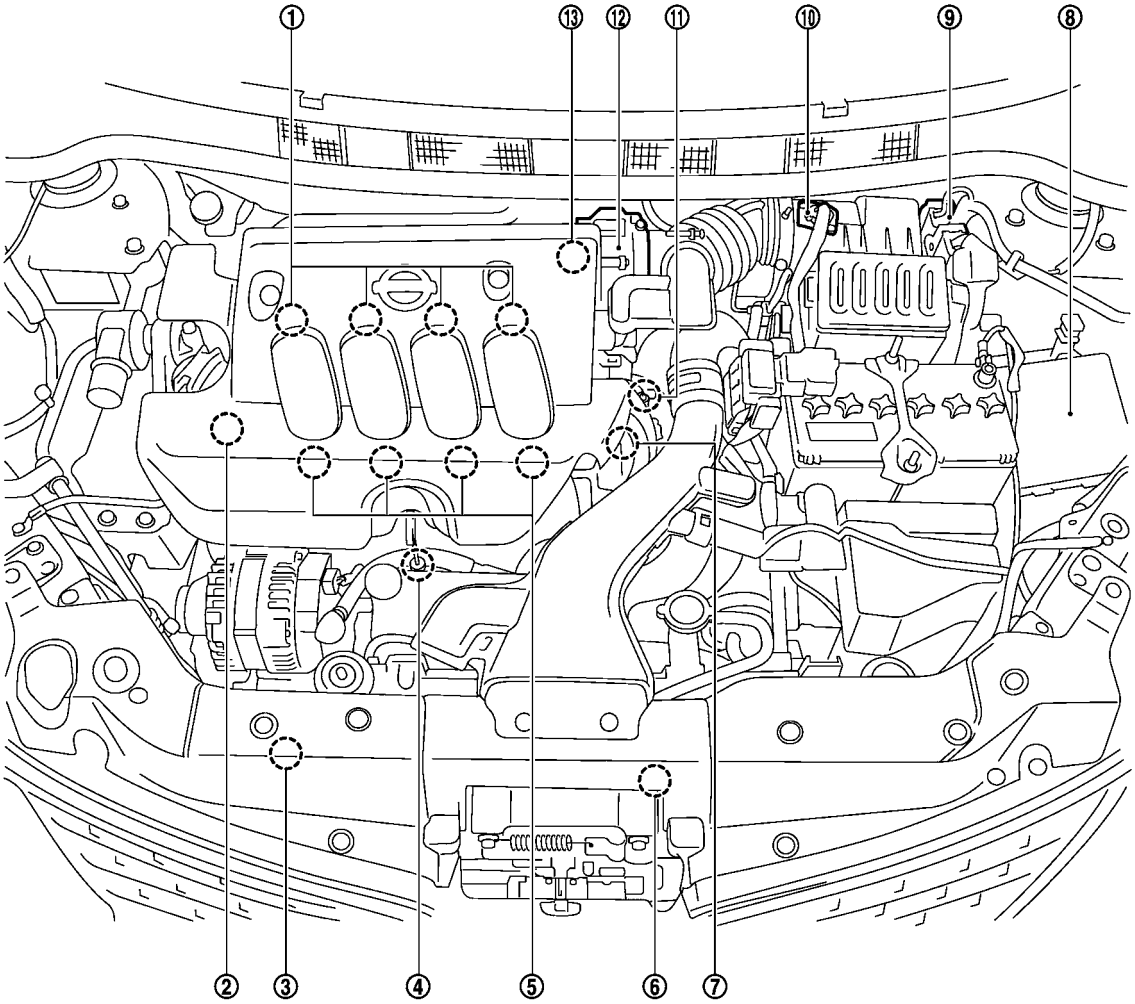

PBIB3261E

1. Ignition coil (with power transistor) and spark plug
2. Intake valve timing control solenoid valve
3. Refrigerant pressure sensor
4. Knock sensor
5. Fuel injector
6. Cooling fan motor
7. Camshaft position sensor (PHASE)
8. IPDM E/R
9. ECM
10. Mass air flow sensor (with intake air temperature sensor)
11. Engine coolant temperature sensor
12. Electric throttle control actuator (with built-in throttle position sensor, throttle control motor)
13. EVAP canister purge volume control solenoid valve

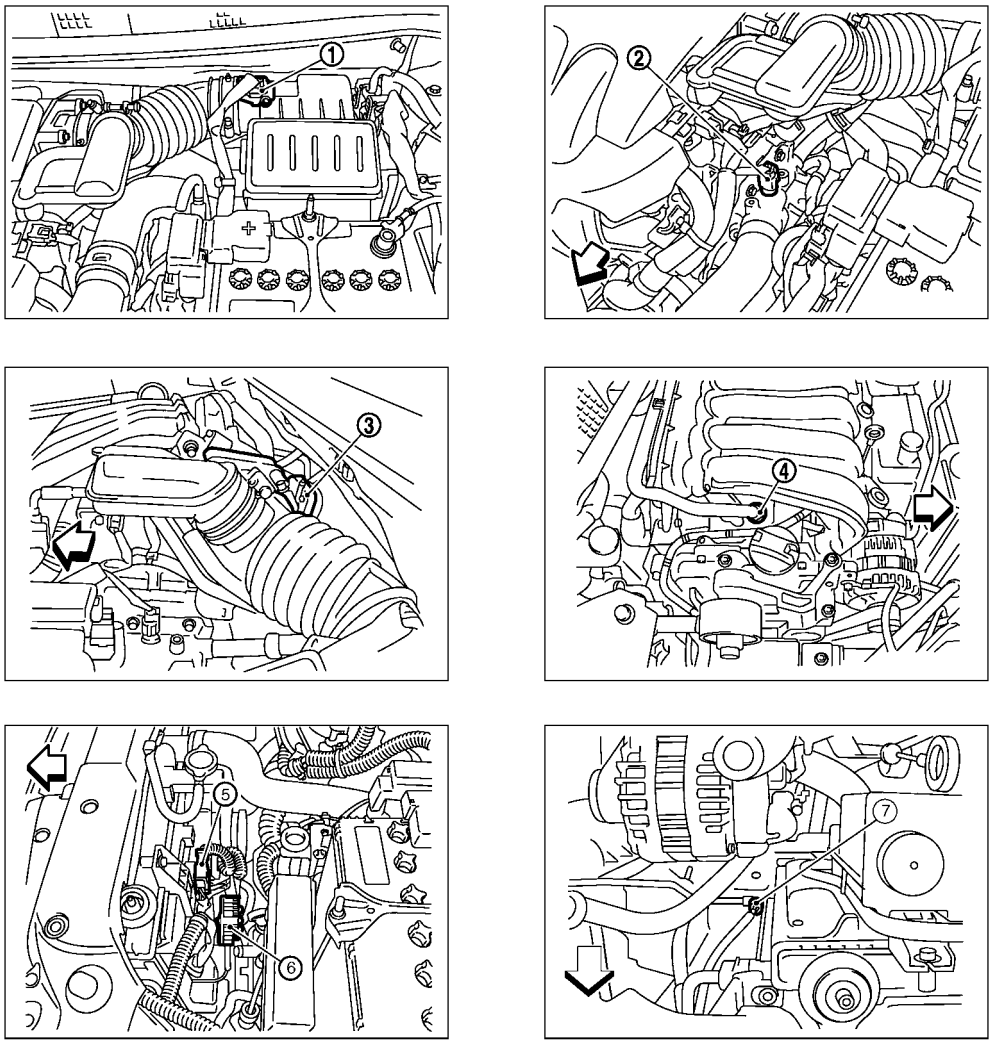

BBIA0724E

⇦ : Vehicle front

1. Mass air flow sensor (with intake air temperature sensor)
2. Engine coolant temperature sensor
3. Electric throttle control actuator (with built in throttle position sensor, throttle control motor)
4. PCV valve
5. Cooling fan motor
6. Resistor
7. Refrigerant pressure sensor

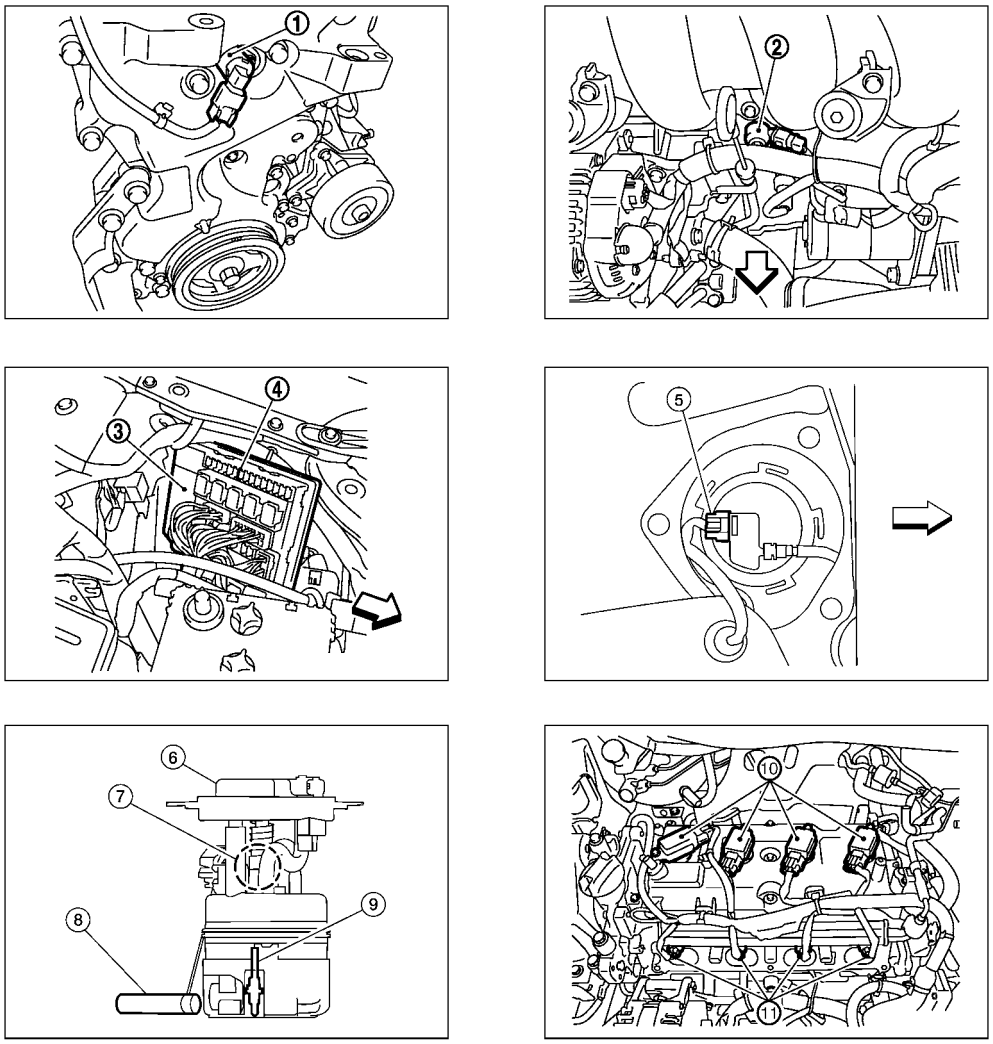

BBIA0725E

⇦ : Vehicle front

1. Intake valve timing control solenoid valve
2. Knock sensor
3. IPDM E/R
4. Fuel pump fuse (15A)
5. Fuel level sensor unit and fuel pump harness connector (view with inspection hole cover removed)
6. Fuel level sensor unit and fuel pump
7. Fuel pressure regulator
8. Fuel level sensor
9. Fuel tank temperature sensor
10. Ignition coil (with power transistor) and spark plug
11. Fuel injector

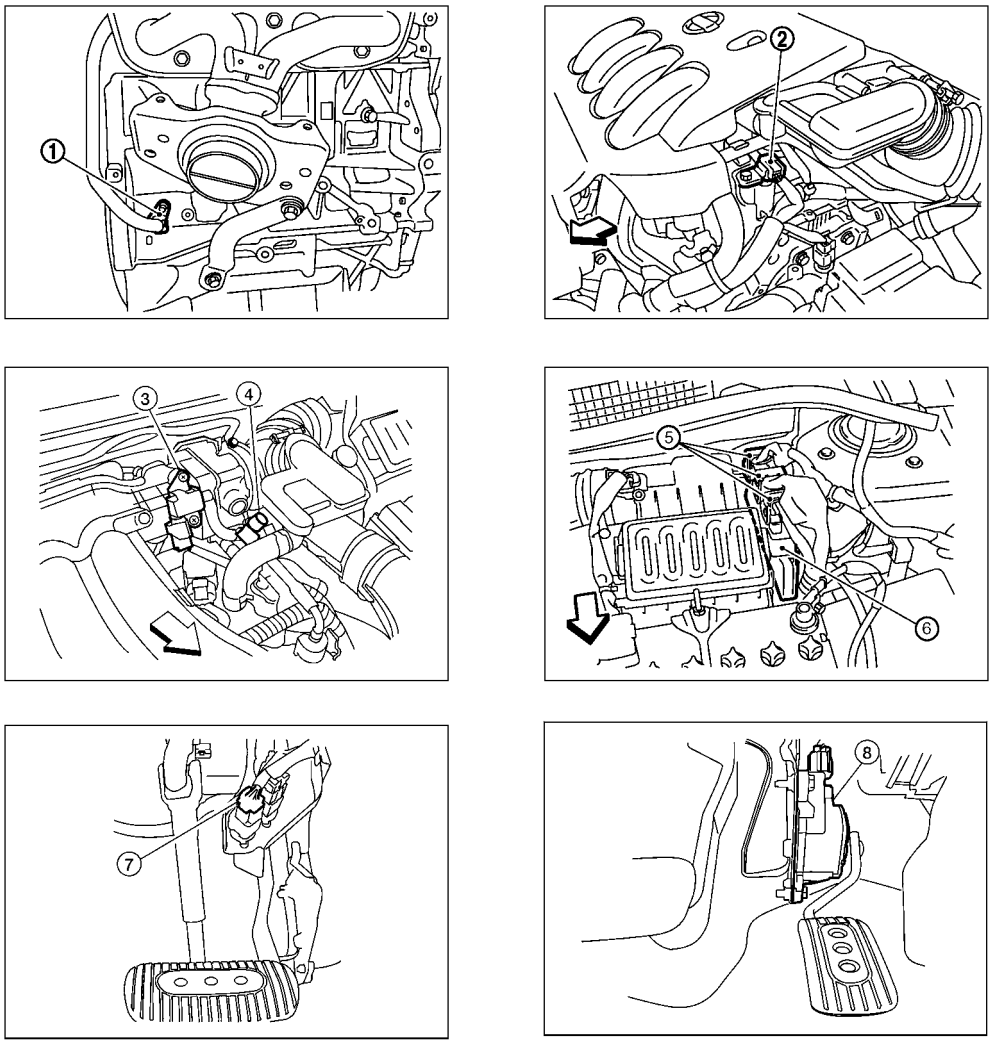

BBIA0727E

⇦: Vehicle front

1. Crankshaft position sensor (POS)
2. Camshaft position sensor (PHASE)
3. EVAP canister purge volume control solenoid valve
4. EVAP service port
5. ECM harness connector
6. ECM
7. Stop lamp switch
8. Accelerator pedal position sensor

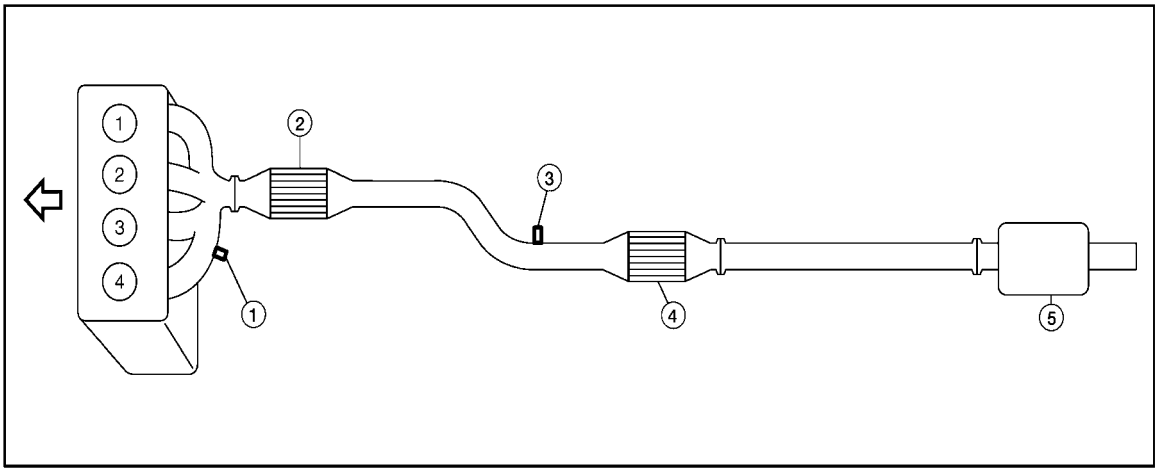

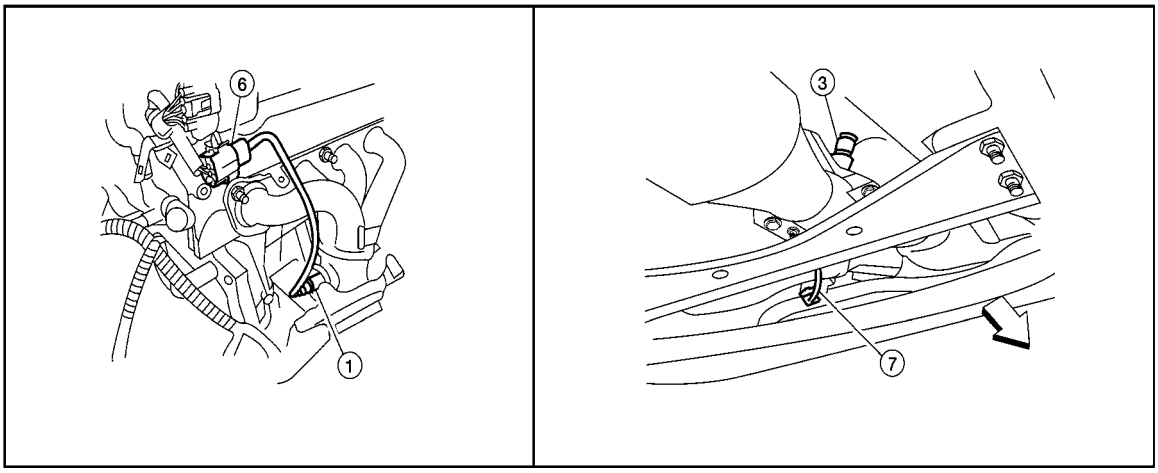

BBIA0726E

⇦ : Vehicle front

1. Air fuel ratio (A/F) sensor 1
2. Three way catalyst (Manifold)
3. Heated oxygen sensor 2
4. Three way catalyst (Under floor)
5. Muffler
6. Air fuel ratio (A/F) sensor 1 harness connector
7. Heated oxygen sensor 2 harness connector

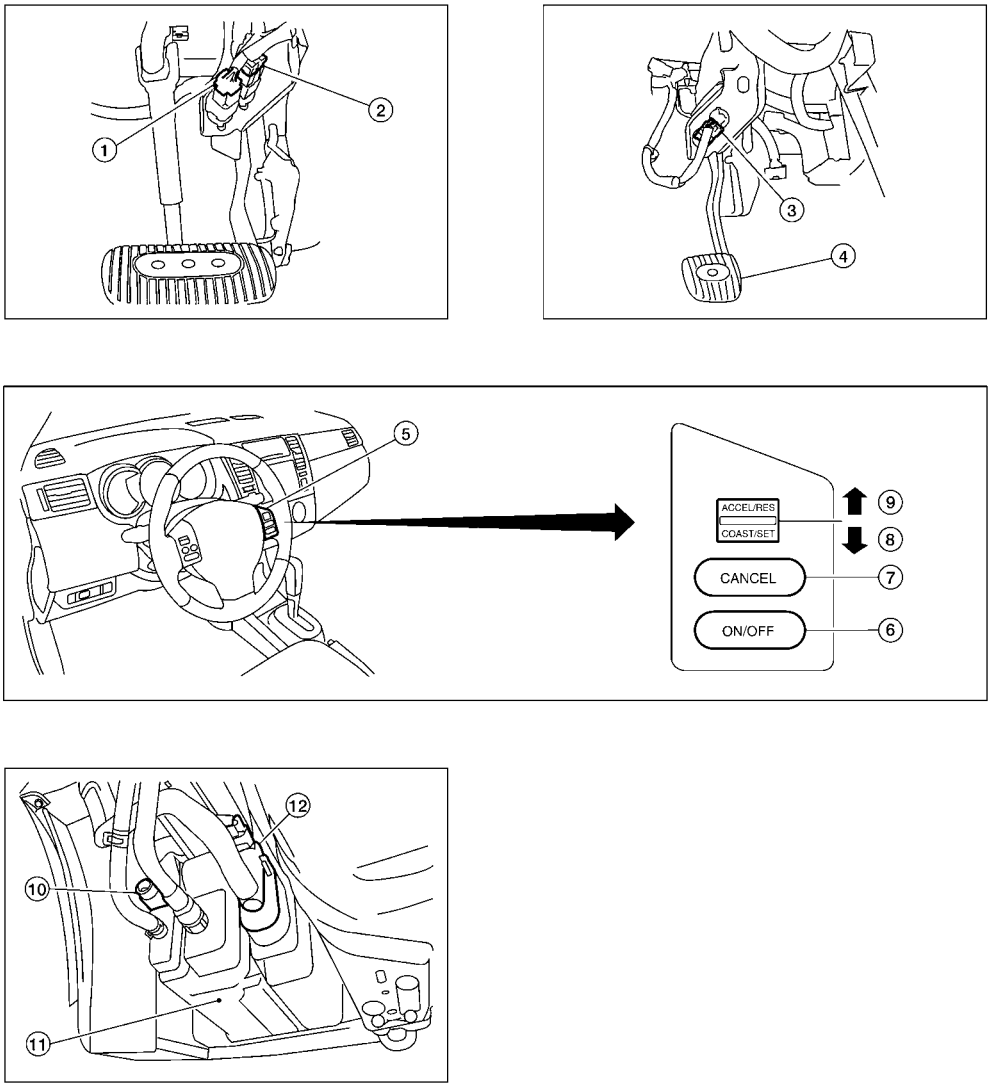

BBIA0728E

1. Stop lamp switch
2. ASCD brake switch
3. ASCD clutch switch
4. Clutch pedal
5. ASCD steering switch
6. MAIN switch
7. CANCEL switch
8. SET/COAST switch
9. RESUME/ACCELERATOR switch
10. EVAP control system pressure sensor
11. EVAP canister
12. EVAP canister vent control valve

Vacuum Hose Drawing

INFOID:0000000001702591

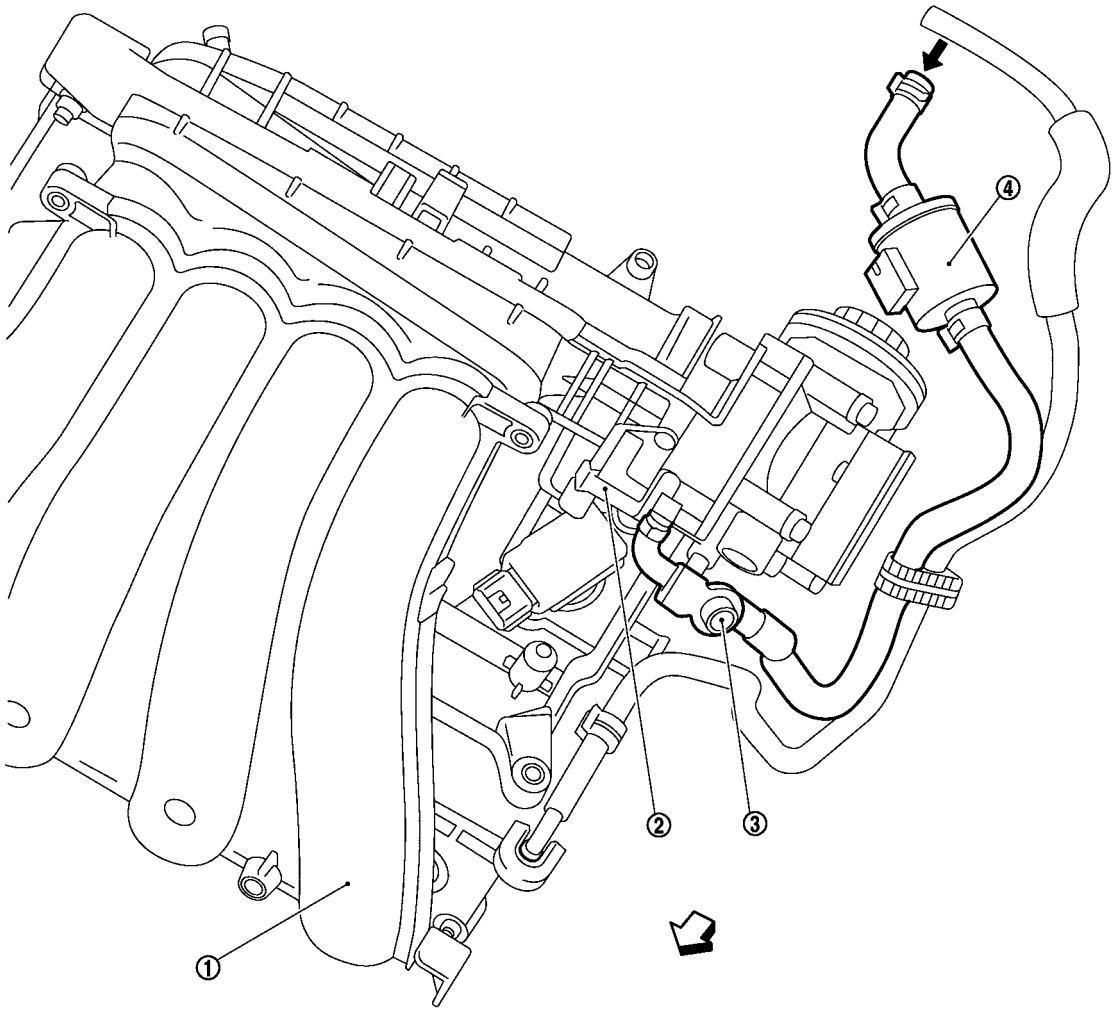

PBIB3330E

⇦ : Vehicle front

⬅ : From EVAP canister

1. Intake manifold
2. EVAP canister purge volume control solenoid valve
3. EVAP service port
4. EVAP purge resonator

NOTE:
Do not use soapy water or any type of solvent while installing vacuum hoses or purge hoses.

Refer to EC-22, "Schematic" for Vacuum Control System.

Circuit Diagram

INFOID:0000000001702592

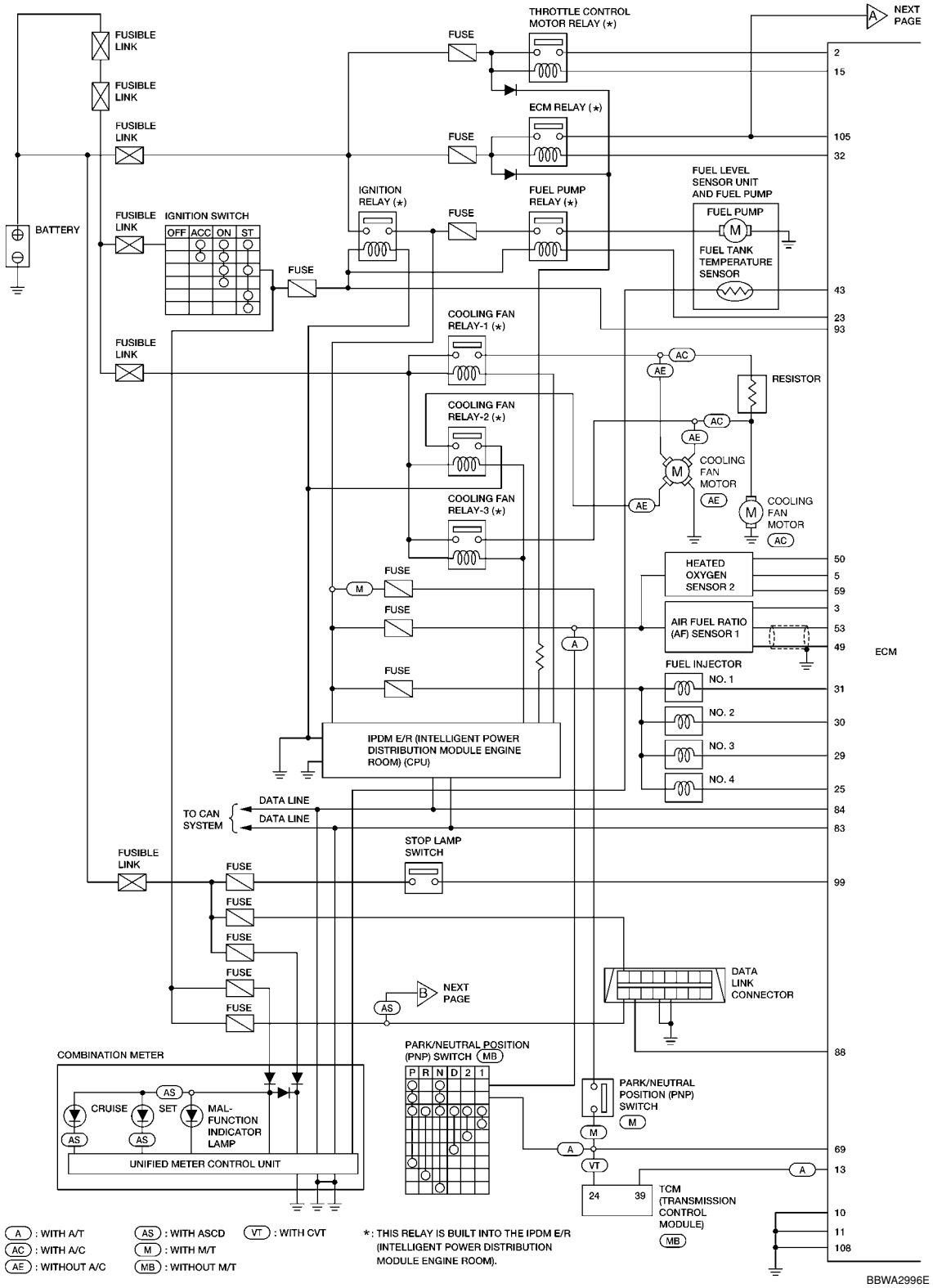

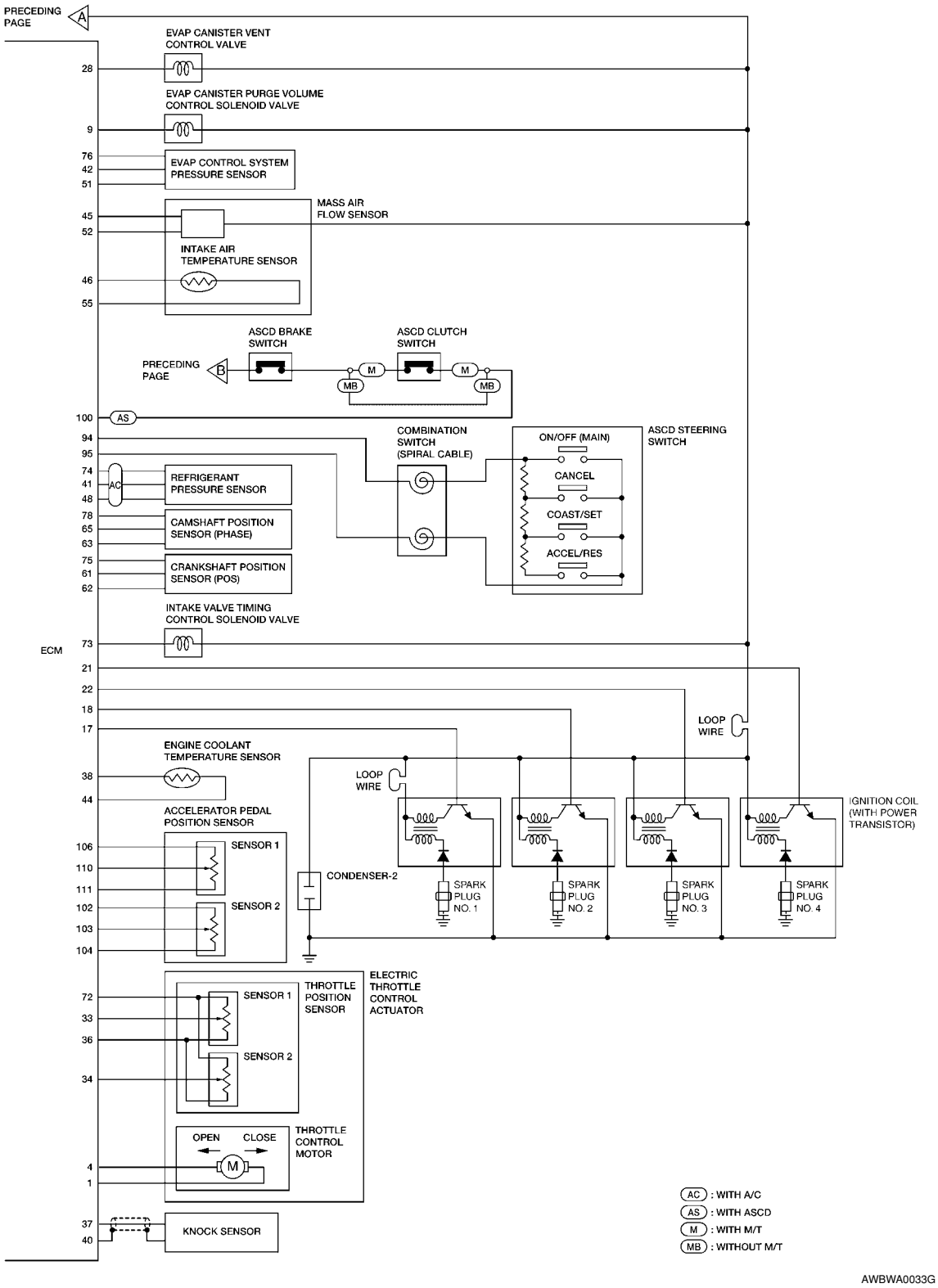
PRECEDING PAGE
A
EVAP CANISTER VENT CONTROL VALVE
28
EVAP CANISTER PURGE VOLUME CONTROL SOLENOID VALVE
9
76
42
51
EVAP CONTROL SYSTEM PRESSURE SENSOR
45
52
MASS AIR FLOW SENSOR
INTAKE AIR TEMPERATURE SENSOR
46
55
ASCD BRAKE SWITCH
ASCD CLUTCH SWITCH
PRECEDING PAGE
B
M
MB
100
AS
94
95
COMBINATION SWITCH (SPIRAL CABLE)
ON/OFF (MAIN)
ASCD STEERING SWITCH
CANCEL
COAST/SET
ACCEL/RES
74
41
48
AC
REFRIGERANT PRESSURE SENSOR
78
65
63
CAMSHAFT POSITION SENSOR (PHASE)
75
61
62
CRANKSHAFT POSITION SENSOR (POS)
INTAKE VALVE TIMING CONTROL SOLENOID VALVE
ECM
73
21
22
18
17
LOOP WIRE
ENGINE COOLANT TEMPERATURE SENSOR
38
44
ACCELERATOR PEDAL POSITION SENSOR
106
110
111
102
103
104
SENSOR 1
SENSOR 2
CONDENSER-2
SPARK PLUG NO. 1
SPARK PLUG NO. 2
SPARK PLUG NO. 3
SPARK PLUG NO. 4
IGNITION COIL (WITH POWER TRANSISTOR)
72
33
36
34
THROTTLE POSITION SENSOR
ELECTRIC THROTTLE CONTROL ACTUATOR
OPEN
CLOSE
THROTTLE CONTROL MOTOR
4
1
37
40
KNOCK SENSOR
AC : WITH A/C
AS : WITH ASCD
M : WITH M/T
MB : WITHOUT M/T
AWBWA0033G

ECM Harness Connector Terminal Layout

INFOID:0000000001702593

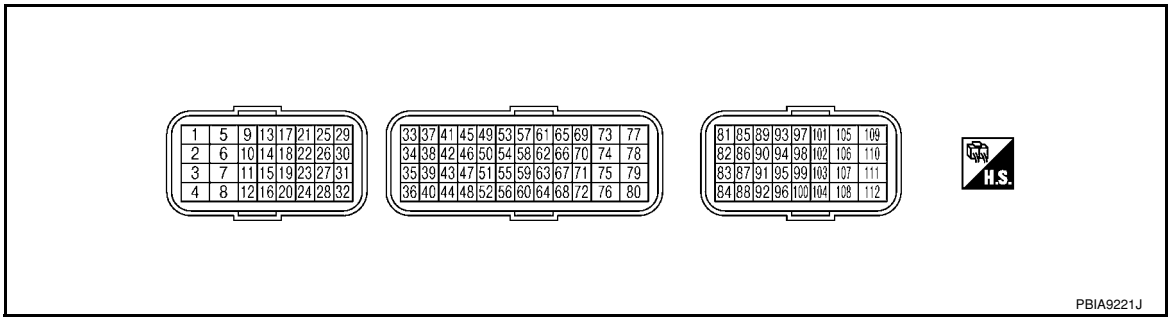

ECM Terminal and Reference Value

INFOID:0000000001702594

PREPARATION

1. ECM (1) is located in the engine room left side near battery.
   - ⇦: Vehicle front

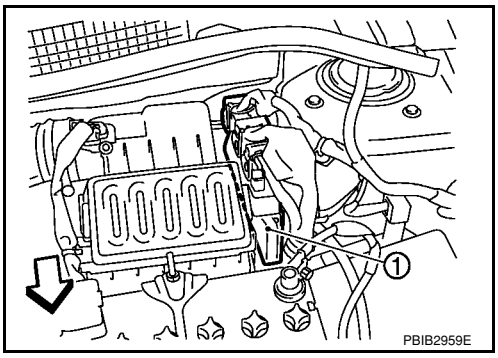

ECM INSPECTION TABLE

Specification data are reference values and are measured between each terminal and ground.
Pulse signal is measured by CONSULT-II.

CAUTION:

Do not use ECM ground terminals when measuring input/output voltage. Doing so may result in damage to the ECMs transistor. Use a ground other than ECM terminals, such as the ground.

TERMINAL NO.	WIRE COLOR	ITEM	CONDITION	DATA (DC Voltage)
1	L	Throttle control motor (Open)	**[Ignition switch: ON]** • Engine stopped • Shift lever: D (A/T, CVT), 1st (M/T) • Accelerator pedal: Fully depressed	Approximately 3.2V★ 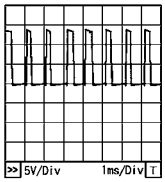 PBIA8150J
2	SB	Throttle control motor power supply	**[Ignition switch: ON]**	BATTERY VOLTAGE (11 - 14V)
3	G	A/F sensor 1 heater	**[Engine is running]** • **Warm-up condition** • Idle speed (More than 140 seconds after starting engine)	Approximately 2.9 - 8.8V★ 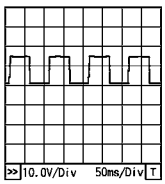 PBIA8148J

TERMINAL NO.	WIRE COLOR	ITEM	CONDITION	DATA (DC Voltage)
4	P	Throttle control motor (Close)	**[Ignition switch: ON]** • Engine stopped • Shift lever: D (A/T, CVT), 1st (M/T) • Accelerator pedal: Fully released	Approximately 1.8V★ 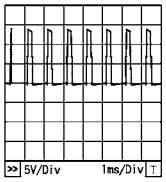 PBIA8149J
5	G	Heated oxygen sensor 2 heater	**[Engine is running]** • Engine speed: Below 3,600 rpm after the following conditions are met. - Engine: After warming up - Keeping the engine speed between 3,500 and 4,000 rpm for 1 minute and at idle for 1 minute under no load.	Approximately 10V★ 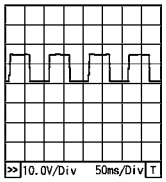 PBIA8148J
			[Ignition switch: ON] • Engine stopped **[Engine is running]** • Engine speed: Above 3,600 rpm.	BATTERY VOLTAGE (11 - 14V)
9	P	EVAP canister purge volume control solenoid valve	**[Engine is running]** • Idle speed • Accelerator pedal: Not depressed even slightly, after engine starting.	BATTERY VOLTAGE (11 - 14V)★ 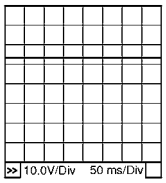 PBIB0050E
			[Engine is running] • Engine speed: About 2,000 rpm (More than 100 seconds after starting engine)	Approximately 10V★ 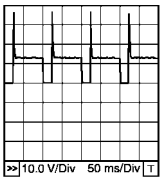 PBIB0520E
10 11	B B	ECM ground	**[Engine is running]** • Idle speed	Body ground
13	L	Tachometer signal	**[Engine is running]** • **Warm-up condition** • Idle speed **NOTE:** The pulse cycle changes depending on rpm at idle.	3 - 5V★ 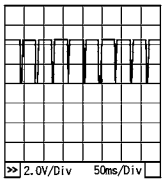 PBIA8164J
			[Engine is running] • **Warm-up condition** • Engine speed: 2,000 rpm.	3 - 5V★ 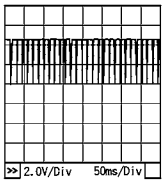 PBIA8165J

TERMINAL NO.	WIRE COLOR	ITEM	CONDITION	DATA (DC Voltage)
15	Y	Throttle control motor relay	**[Ignition switch: OFF]**	BATTERY VOLTAGE (11 - 14V)
			[Ignition switch: ON]	0 - 1.0V
17 18 21 22	R LG G SB	Ignition signal No. 1 Ignition signal No. 2 Ignition signal No. 4 Ignition signal No. 3	**[Engine is running]** • **Warm-up condition** • Idle speed **NOTE:** The pulse cycle changes depending on rpm at idle.	0 - 0.3V★ 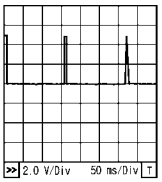 PBIA9265J
			[Engine is running] • **Warm-up condition** • Engine speed: 2,500 rpm.	0.2 - 0.5V★ 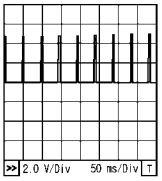 PBIA9266J
23	GR	Fuel pump relay	**[Ignition switch: ON]** • For 1 second after turning ignition switch ON **[Engine is running]**	0 - 1.0V
			[Ignition switch: ON] • More than 1 second after turning ignition switch ON	BATTERY VOLTAGE (11 - 14V)
25 29 30 31	V Y O L	Fuel injector No. 4 Fuel injector No. 3 Fuel injector No. 2 Fuel injector No. 1	**[Engine is running]** • **Warm-up condition** • Idle speed **NOTE:** The pulse cycle changes depending on rpm at idle.	BATTERY VOLTAGE (11 - 14V)★ 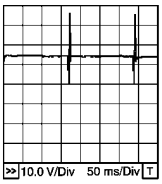 PBIB0529E
			[Engine is running] • **Warm-up condition** • Engine speed: 2,000 rpm	BATTERY VOLTAGE (11 - 14V)★ 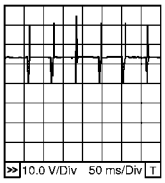 PBIA4943J
28	W	EVAP canister vent control valve	**[Ignition switch: ON]**	BATTERY VOLTAGE (11 - 14V)
32	P	ECM relay (Self shut-off)	**[Engine is running]** **[Ignition switch: OFF]** • For a few seconds after turning ignition switch OFF	0 - 1.0V
			[Ignition switch: OFF] • More than a few seconds after turning ignition switch OFF	BATTERY VOLTAGE (11 - 14V)

TERMINAL NO.	WIRE COLOR	ITEM	CONDITION	DATA (DC Voltage)
33	LG	Throttle position sensor 1	**[Ignition switch: ON]** • Engine stopped • Shift lever: D (A/T, CVT), 1st (M/T) • Accelerator pedal: Fully released	More than 0.36V
			[Ignition switch: ON] • Engine stopped • Shift lever: D (A/T, CVT), 1st (M/T) • Accelerator pedal: Fully depressed	Less than 4.75V
34	O	Throttle position sensor 2	**[Ignition switch: ON]** • Engine stopped • Shift lever: D (A/T, CVT), 1st (M/T) • Accelerator pedal: Fully released	Less than 4.75V
			[Ignition switch: ON] • Engine stopped • Shift lever: D (A/T, CVT), 1st (M/T) • Accelerator pedal: Fully depressed	More than 0.36V
36	Y	Sensor ground (Throttle position sensor)	**[Engine is running]** • **Warm-up condition** • Idle speed	Approximately 0V
37	W	Knock sensor	**[Engine is running]** • Idle speed	Approximately 2.5V
38	P	Engine coolant temperature sensor	**[Engine is running]**	Approximately 0 - 4.8V Output voltage varies with engine coolant temperature.
40	—	Sensor ground (Knock sensor)	**[Engine is running]** • **Warm-up condition** • Idle speed	Approximately 0V
41	GR	Refrigerant pressure sensor	**[Engine is running]** • **Warm-up condition** • Both A/C switch and blower fan switch: ON (Compressor operates.)	1.0 - 4.0V
42	V	EVAP control system pressure sensor	**[Ignition switch: ON]**	Approximately 1.8 - 4.8V
43	P	Fuel tank temperature sensor	**[Engine is running]**	Approximately 0 - 4.8V Output voltage varies with fuel tank temperature
44	B	Sensor ground (Engine coolant temperature sensor)	**[Engine is running]** • **Warm-up condition** • Idle speed	Approximately 0V
45	G	Mass air flow sensor	**[Engine is running]** • **Warm-up condition** • Idle speed	0.8 - 1.1V
			[Engine is running] • **Warm-up condition** • Engine speed: 2,500 rpm	1.4 - 1.7V
46	V	Intake air temperature sensor	**[Engine is running]**	Approximately 0 - 4.8V Output voltage varies with intake air temperature.
48	BR	Sensor ground (Refrigerant pressure sensor)	**[Engine is running]** • **Warm-up condition** • Idle speed	Approximately 0V
49	W	A/F sensor 1	**[Engine is running]** • **Warm-up condition** • Engine speed: 2,000 rpm	Approximately 1.8V Output voltage varies with air fuel ratio.

TERMINAL NO.	WIRE COLOR	ITEM	CONDITION	DATA (DC Voltage)
50	W	Heated oxygen sensor 2	**[Engine is running]** • Revving engine from idle to 3,000 rpm quickly after the following conditions are met. - Engine: After warming up - Keeping the engine speed between 3,500 and 4,000 rpm for 1 minute and at idle for 1 minute under no load.	0 - Approximately 1.0V
51	O	Sensor ground (EVAP control system pressure sensor)	**[Engine is running]** • **Warm-up condition** • Idle speed	Approximately 0V
52	LG	Sensor ground (Mass air flow sensor)	**[Engine is running]** • **Warm-up condition** • Idle speed	Approximately 0V
53	B	A/F sensor 1	**[Ignition switch: ON]**	Approximately 2.2V
55	O	Sensor ground (Intake air temperature sensor)	**[Engine is running]** • **Warm-up condition** • Idle speed	Approximately 0V
59	O	Sensor ground (Heated oxygen sensor 2)	**[Engine is running]** • **Warm-up condition** • Idle speed	Approximately 0V
61	W	Crankshaft position sensor (POS)	**[Engine is running]** • **Warm-up condition** • Idle speed **NOTE:** The pulse cycle changes depending on rpm at idle.	Approximately 4.0V★ 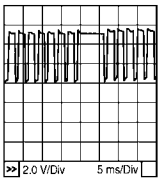 PBIB2998E
			[Engine is running] • Engine speed: 2,000 rpm	Approximately 4.0V★ 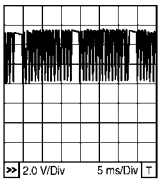 PBIB2999E
62	R	Sensor ground [Crankshaft position sensor (POS)]	**[Engine is running]** • **Warm-up condition** • Idle speed	Approximately 0V
63	BR	Sensor ground [Camshaft position sensor (PHASE)]	**[Engine is running]** • **Warm-up condition** • Idle speed	Approximately 0V

TERMINAL NO.	WIRE COLOR	ITEM	CONDITION	DATA (DC Voltage)
65	G	Camshaft position sensor (PHASE)	**[Engine is running]** • **Warm-up condition** • Idle speed **NOTE:** The pulse cycle changes depending on rpm at idle.	1.0 - 2.0V★ 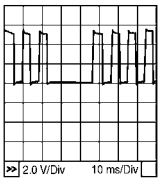 PBIB2986E
			[Engine is running] • Engine speed: 2,000 rpm.	1.0 - 2.0V★ 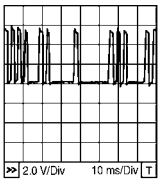 PBIB2987E
69	L	Park/neutral position (PNP) switch	**[Ignition switch: ON]** • Shift lever: P or N (A/T, CVT), Neutral (M/T)	BATTERY VOLTAGE (11 - 14V)
			[Ignition switch: ON] • Except above	Approximately 0V
72	V	Sensor power supply (Throttle position sensor)	**[Ignition switch: ON]**	Approximately 5V
73	P	Intake valve timing control solenoid valve	**[Engine is running]** • **Warm-up condition** • Idle speed	BATTERY VOLTAGE (11 - 14V)
			[Engine is running] • **Warm-up condition** • When revving engine up to 2,000 rpm quickly	7 - 10V★ 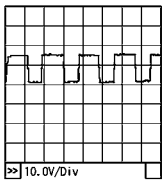 PBIA4937J
74	W	Sensor power supply (Refrigerant pressure sensor)	**[Ignition switch: ON]**	Approximately 5V
75	BR	Sensor power supply [Crankshaft position sensor (POS)]	**[Ignition switch: ON]**	Approximately 5V
76	W	EVAP control system pressure sensor power supply	**[Ignition switch: ON]**	Approximately 5V
78	O	Sensor power supply [Camshaft position sensor (PHASE)]	**[Ignition switch: ON]**	Approximately 5V
83	P	CAN communication line	—	—
84	L	CAN communication line	—	—
88	LG	DATA link connector	**[Ignition switch: ON]** • CONSULT-II or GST: Disconnected.	Approximately 10.5V
93	O	Ignition switch	**[Ignition switch: OFF]**	0V
			[Ignition switch: ON]	BATTERY VOLTAGE (11 - 14V)

TERMINAL NO.	WIRE COLOR	ITEM	CONDITION	DATA (DC Voltage)
94	R	ASCD steering switch	**[Ignition switch: ON]** • ASCD steering switch: OFF	Approximately 4V
			[Ignition switch: ON] • MAIN switch: Pressed	Approximately 0V
			[Ignition switch: ON] • CANCEL switch: Pressed	Approximately 1V
			[Ignition switch: ON] • RESUME/ACCELERATE switch: Pressed	Approximately 3V
			[Ignition switch: ON] • SET/COAST switch: Pressed	Approximately 2V
95	B	Sensor ground (ASCD steering switch)	**[Engine is running]** • **Warm-up condition** • Idle speed	Approximately 0V
99	R	Stop lamp switch	**[Ignition switch: OFF]** • Brake pedal: Fully released	Approximately 0V
			[Ignition switch: OFF] • Brake pedal: Slightly depressed	BATTERY VOLTAGE (11 - 14V)
100	G	ASCD brake switch	**[Ignition switch: ON]** • Brake pedal: Slightly depressed (A/T, CVT) • Brake pedal and/or clutch pedal: Slightly depressed (M/T)	Approximately 0V
			[Ignition switch: ON] • Brake pedal: Fully released (A/T, CVT) • Brake pedal and clutch pedal: Fully released (M/T)	BATTTERY VOLTAGE (11 - 14V)
102	SB	Sensor power supply (Accelerator pedal position sensor 2)	**[Ignition switch: ON]**	Approximately 5V
103	GR	Accelerator pedal position sensor 2	**[Ignition switch: ON]** • Engine stopped • Accelerator pedal: Fully released	0.3 - 0.6V
			[Ignition switch: ON] • Engine stopped • Accelerator pedal: Fully depressed	1.95 - 2.4V
104	Y	Sensor ground (Accelerator pedal position sensor 2)	**[Engine is running]** • **Warm-up condition** • Idle speed	Approximately 0V
105	G	Power supply for ECM	**[Ignition switch: ON]**	BATTERY VOLTAGE (11 - 14V)
106	P	Sensor power supply (Accelerator pedal position sensor 1)	**[Ignition switch: ON]**	Approximately 5V
108	B	ECM ground	**[Engine is running]** • Idle speed	Body ground
110	G	Accelerator pedal position sensor 1	**[Ignition switch: ON]** • Engine stopped • Accelerator pedal: Fully released	0.6 - 0.9V
			[Ignition switch: ON] • Engine stopped • Accelerator pedal: Fully depressed	3.9 - 4.7V
111	R	Sensor ground (Accelerator pedal position sensor 1)	**[Engine is running]** • **Warm-up condition** • Idle speed	Approximately 0V

★: Average voltage for pulse signal (Actual pulse signal can be confirmed by oscilloscope.)

CONSULT-II Function (ENGINE)

INFOID:0000000001702595

FUNCTION

Diagnostic test mode	Function
Work support	This mode enables a technician to adjust some devices faster and more accurately by following the indications on the CONSULT-II unit.
Self-diagnostic results	Self-diagnostic results such as 1st trip DTC, DTCs and 1st trip freeze frame data or freeze frame data can be read and erased quickly.*
Data monitor	Input/Output data in the ECM can be read.
Data monitor (SPEC)	Input/Output of the specification for Basic fuel schedule, AFM, A/F feedback control value and the other data monitor items can be read.
CAN diagnostic support monitor	The results of transmit/receive diagnosis of CAN communication can be read.
Active test	Diagnostic Test Mode in which CONSULT-II drives some actuators apart from the ECMs and also shifts some parameters in a specified range.
Function test	This mode is used to inform customers when their vehicle condition requires periodic maintenance.
DTC & SRT confirmation	The status of system monitoring tests and the self-diagnosis status/result can be confirmed.
ECM part number	ECM part number can be read.

*: The following emission-related diagnostic information is cleared when the ECM memory is erased.

- Diagnostic trouble codes
- 1st trip diagnostic trouble codes
- Freeze frame data
- 1st trip freeze frame data
- System readiness test (SRT) codes
- Test values

ENGINE CONTROL COMPONENT PARTS/CONTROL SYSTEMS APPLICATION

Item			DIAGNOSTIC TEST MODE							
			WORK SUPPORT	SELF-DIAGNOSTIC RESULTS		DATA MONITOR	DATA MONITOR (SPEC)	ACTIVE TEST	DTC & SRT CONFIRMATION	
				DTC*1	FREEZE FRAME DATA*2				SRT STATUS	DTC WORK SUPPORT
ENGINE CONTROL COMPONENT PARTS	INPUT	Crankshaft position sensor (POS)		×	×	×	×			
		Camshaft position sensor (PHASE)		×	×	×	×			
		Mass air flow sensor		×		×	×			
		Engine coolant temperature sensor		×	×	×	×	×		
		Air fuel ratio (A/F) sensor 1		×		×	×		×	×
		Heated oxygen sensor 2		×		×	×		×	×
		Wheel sensor		×	×	×	×			
		Accelerator pedal position sensor		×		×	×			
		Throttle position sensor		×	×	×	×			
		Fuel tank temperature sensor		×		×	×	×		
		EVAP control system pressure sensor		×		×	×			
		Intake air temperature sensor		×	×	×	×			
		Knock sensor		×						
		Refrigerant pressure sensor				×	×			
		Closed throttle position switch (Accelerator pedal position sensor signal)				×	×			
		Air conditioner switch				×	×			
		Park/neutral position (PNP) switch		×		×	×			
		Stop lamp switch		×		×	×			
		Battery voltage				×	×			
		Load signal				×	×			
		Fuel level sensor		×		×	×			
		ASCD steering switch		×		×	×			
		ASCD brake switch		×		×	×			
		ASCD clutch switch		×		×	×			
		EPS control unit				×	×			

Item			DIAGNOSTIC TEST MODE							
			WORK SUPPORT	SELF-DIAGNOSTIC RESULTS		DATA MONITOR	DATA MONITOR (SPEC)	ACTIVE TEST	DTC & SRT CONFIRMATION	
				DTC*1	FREEZE FRAME DATA*2				SRT STATUS	DTC WORK SUPPORT
ENGINE CONTROL COMPONENT PARTS	OUTPUT	Fuel injector				×	×	×		
		Power transistor (Ignition timing)				×	×	×		
		Throttle control motor relay		×		×	×			
		Throttle control motor		×						
		EVAP canister purge volume control solenoid valve		×		×	×	×		×
		Air conditioner relay				×	×			
		Fuel pump relay	×			×	×	×		
		Cooling fan relay		×		×	×	×		
		Air fuel ratio (A/F) sensor 1 heater		×		×	×		×*3	
		Heated oxygen sensor 2 heater		×		×	×		×*3	
		EVAP canister vent control valve	×	×		×	×	×		
		Intake valve timing control solenoid valve		×		×	×	×		
		Calculated load value			×	×	×			

X: Applicable

*1: This item includes 1st trip DTCs.

*2: This mode includes 1st trip freeze frame data or freeze frame data. The items appear on CONSULT-II screen in freeze frame data mode only if a 1st trip DTC or DTC is detected. For details, refer to EC-47, "Emission-related Diagnostic Information".

*3: Always “COMPLT” is displayed.

INSPECTION PROCEDURE

Refer to LAN-8, "Description".

WORK SUPPORT MODE

Work Item

WORK ITEM	CONDITION	USAGE
FUEL PRESSURE RELEASE	• FUEL PUMP WILL STOP BY TOUCHING “START” DURING IDLING. CRANK A FEW TIMES AFTER ENGINE STALLS.	When releasing fuel pressure from fuel line
IDLE AIR VOL LEARN	• THE IDLE AIR VOLUME THAT KEEPS THE ENGINE WITHIN THE SPECIFIED RANGE IS MEMORIZED IN ECM.	When learning the idle air volume
SELF-LEARNING CONT	• THE COEFFICIENT OF SELF-LEARNING CONTROL MIXTURE RATIO RETURNS TO THE ORIGINAL COEFFICIENT.	When clearing the coefficient of self-learning control value

WORK ITEM	CONDITION	USAGE
EVAP SYSTEM CLOSE	CLOSE THE EVAP CANISTER VENT CONTROL VALVE IN ORDER TO MAKE EVAP SYSTEM CLOSE UNDER THE FOLLOWING CONDITIONS. • IGN SW “ON” • ENGINE NOT RUNNING • AMBIENT TEMPERATURE IS ABOVE 0°C (32°F). • NO VACUUM AND NO HIGH PRESSURE IN EVAP SYSTEM • FUEL TANK TEMP. IS MORE THAN 0°C (32°F). • WITHIN 10 MINUTES AFTER STARTING “EVAP SYSTEM CLOSE” • WHEN TRYING TO EXECUTE “EVAP SYSTEM CLOSE” UNDER THE CONDITION EXCEPT ABOVE, CONSULT-II WILL DISCONTINUE IT AND DISPLAY APPROPRIATE INSTRUCTION. **NOTE:** **WHEN STARTING ENGINE, CONSULT-II MAY DISPLAY “BATTERY VOLTAGE IS LOW. CHARGE BATTERY”, EVEN IN USING CHARGED BATTERY.**	When detecting EVAP vapor leak point of EVAP system
TARGET IDLE RPM ADJ*	• IDLE CONDITION	When setting target idle speed
TARGET IGN TIM ADJ*	• IDLE CONDITION	When adjusting target ignition timing
VIN REGISTRATION	• IN THIS MODE, VIN IS REGISTERED IN ECM.	When registering VIN in ECM

*: This function is not necessary in the usual service procedure.

SELF-DIAG RESULTS MODE

Self Diagnostic Item

Regarding items of DTC and 1st trip DTC, refer to EC-47, "Emission-related Diagnostic Information".

Freeze Frame Data and 1st Trip Freeze Frame Data

Freeze frame data item*	Description
DIAG TROUBLE CODE [PXXXX]	• The engine control component part/control system has a trouble code, it is displayed as PXXXX. (Refer to EC-9)
FUEL SYS-B1	• “Fuel injection system status” at the moment a malfunction is detected is displayed. • One mode in the following is displayed. Mode2: Open loop due to detected system malfunction Mode3: Open loop due to driving conditions (power enrichment, deceleration enleanment) Mode4: Closed loop - using oxygen sensor(s) as feedback for fuel control Mode5: Open loop - has not yet satisfied condition to go to closed loop
CAL/LD VALUE [%]	• The calculated load value at the moment a malfunction is detected is displayed.
COOLANT TEMP [°C] or [°F]	• The engine coolant temperature at the moment a malfunction is detected is displayed.
L-FUEL TRM-B1 [%]	• “Long-term fuel trim” at the moment a malfunction is detected is displayed. • The long-term fuel trim indicates much more gradual feedback compensation to the base fuel schedule than short-term fuel trim.
S-FUEL TRM-B1 [%]	• “Short-term fuel trim” at the moment a malfunction is detected is displayed. • The short-term fuel trim indicates dynamic or instantaneous feedback compensation to the base fuel schedule.
ENGINE SPEED [rpm]	• The engine speed at the moment a malfunction is detected is displayed.
VEHICL SPEED [km/h] or [mph]	• The vehicle speed at the moment a malfunction is detected is displayed.
ABSOL TH-P/S [%]	• The throttle valve opening angle at the moment a malfunction is detected is displayed.
B/FUEL SCHDL [msec]	• The base fuel schedule at the moment a malfunction is detected is displayed.

Freeze frame data item*	Description
INT/A TEMP SE [°C] or [°F]	• The intake air temperature at the moment a malfunction is detected is displayed.
FUEL SYS-B2	• Always a certain value is displayed. • These items can not efficiently for C11 models.
L-FUEL TRM-B2 [%]	
S-FUEL TRM-B2 [%]	
INT MANI PRES [kPa]	
FTFMCH1	

*: The items are the same as those of 1st trip freeze frame data.

DATA MONITOR MODE

Monitored Item

×: Applicable

Monitored item [Unit]	ECM INPUT SIGNALS	MAIN SIGNALS	Description	Remarks
ENG SPEED [rpm]	×	×	• Indicates the engine speed computed from the signals of the crankshaft position sensor (POS) and camshaft position sensor (PHASE).	• Accuracy becomes poor if engine speed drops below the idle rpm. • If the signal is interrupted while the engine is running, an abnormal value may be indicated.
MAS A/F SE-B1 [V]	×	×	• The signal voltage of the mass air flow sensor is displayed.	• When the engine is stopped, a certain value is indicated.
B/FUEL SCHDL [msec]		×	• "Base fuel schedule" indicates the fuel injection pulse width programmed into ECM, prior to any learned on board correction.	
A/F ALPHA-B1 [%]		×	• The mean value of the air-fuel ratio feedback correction factor per cycle is indicated.	• When the engine is stopped, a certain value is indicated. • This data also includes the data for the air/fuel ratio learning control.
COOLAN TEMP/S [°C] or [°F]	×	×	• The engine coolant temperature (determined by the signal voltage of the engine coolant temperature sensor) is displayed.	• When the engine coolant temperature sensor is open or short-circuited, ECM enters fail-safe mode. The engine coolant temperature determined by the ECM is displayed.
A/F SEN1 (B1) [V]	×	×	• The A/F signal computed from the input signal of the A/F sensor 1 is displayed.	
HO2S2 (B1) [V]	×		• The signal voltage of the heated oxygen sensor 2 is displayed.	
HO2S2 MNTR (B1) [RICH/LEAN]	×		• Display of heated oxygen sensor 2 signal: RICH: means the amount of oxygen after three way catalyst is relatively small. LEAN: means the amount of oxygen after three way catalyst is relatively large.	• When the engine is stopped, a certain value is indicated.
VHCL SPEED SE [km/h] or [mph]	×	×	• The vehicle speed computed from the vehicle speed signal is displayed.	
BATTERY VOLT [V]	×	×	• The power supply voltage of ECM is displayed.	
ACCEL SEN 1 [V]	×	×	• The accelerator pedal position sensor signal voltage is displayed.	• ACCEL SEN 2 signal is converted by ECM internally. Thus, it differs from ECM terminal voltage signal.
ACCEL SEN 2 [V]	×			
THRTL SEN 1 [V]	×	×	• The throttle position sensor signal voltage is displayed.	• THRTL SEN 2 signal is converted by ECM internally. Thus, it differs from ECM terminal voltage signal.
THRTL SEN 2 [V]	×			

Monitored item [Unit]	ECM INPUT SIGNALS	MAIN SIGNALS	Description	Remarks
FUEL T/TMP SE [°C] or [°F]	×		• The fuel temperature (determined by the signal voltage of the fuel tank temperature sensor) is displayed.	
INT/A TEMP SE [°C] or [°F]	×	×	• The intake air temperature (determined by the signal voltage of the intake air temperature sensor) is indicated.	
EVAP SYS PRES [V]	×		• The signal voltage of EVAP control system pressure sensor is displayed.	
FUEL LEVEL SE [V]	×		• The signal voltage of the fuel level sensor is displayed.	
START SIGNAL [ON/OFF]	×	×	• Indicates start signal status [ON/OFF] computed by the ECM according to the signals of engine speed and battery voltage.	• After starting the engine, [OFF] is displayed regardless of the starter signal.
CLSD THL POS [ON/OFF]	×	×	• Indicates idle position [ON/OFF] computed by the ECM according to the accelerator pedal position sensor signal.	
AIR COND SIG [ON/OFF]	×	×	• Indicates [ON/OFF] condition of the air conditioner switch as determined by the air conditioner signal.	
P/N POSI SW [ON/OFF]	×	×	• Indicates [ON/OFF] condition from the park/neutral position (PNP) switch signal.	
PW/ST SIGNAL [ON/OFF]	×	×	• [ON/OFF] condition of the power steering system (determined by the signal sent from EPS control unit) is indicated.	
LOAD SIGNAL [ON/OFF]	×	×	• Indicates [ON/OFF] condition from the electrical load signal. ON: Rear window defogger switch is ON and/or lighting switch is in 2nd position. OFF: Both rear window defogger switch and lighting switch are OFF.	
IGNITION SW [ON/OFF]	×		• Indicates [ON/OFF] condition from ignition switch.	
HEATER FAN SW [ON/OFF]	×		• Indicates [ON/OFF] condition from the heater fan switch signal.	
BRAKE SW [ON/OFF]	×		• Indicates [ON/OFF] condition from the stop lamp switch signal.	
INJ PULSE-B1 [msec]		×	• Indicates the actual fuel injection pulse width compensated by ECM according to the input signals.	• When the engine is stopped, a certain computed value is indicated.
IGN TIMING [BTDC]			• Indicates the ignition timing computed by ECM according to the input signals.	• When the engine is stopped, a certain value is indicated.
CAL/LD VALUE [%]			• “Calculated load value” indicates the value of the current airflow divided by peak airflow.	
MASS AIRFLOW [g·m/s]			• Indicates the mass airflow computed by ECM according to the signal voltage of the mass air flow sensor.	
PURG VOL C/V [%]			• Indicates the EVAP canister purge volume control solenoid valve control value computed by the ECM according to the input signals. • The opening becomes larger as the value increases.	
INT/V TIM (B1) [°CA]			• Indicates [°CA] of intake camshaft advanced angle.	

Monitored item [Unit]	ECM INPUT SIGNALS	MAIN SIGNALS	Description	Remarks
INT/V SOL (B1) [%]			• The control value of the intake valve timing control solenoid valve (determined by ECM according to the input signal) is indicated. • The advance angle becomes larger as the value increases	
AIR COND RLY [ON/OFF]		×	• The air conditioner relay control condition (determined by ECM according to the input signals) is indicated.	
FUEL PUMP RLY [ON/OFF]		×	• Indicates the fuel pump relay control condition determined by ECM according to the input signals.	
VENT CONT/V [ON/OFF]			• The control condition of the EVAP canister vent control valve (determined by ECM according to the input signals) is indicated. ON: Closed OFF: Open	
THRTL RELAY [ON/OFF]		×	• Indicates the throttle control motor relay control condition determined by the ECM according to the input signals.	
COOLING FAN [HI/LOW/OFF]		×	• Indicates the condition of the cooling fan (determined by ECM according to the input signals). HI: High speed operation LOW: Low speed operation OFF: Stop	
HO2S2 HTR (B1) [ON/OFF]			• Indicates [ON/OFF] condition of heated oxygen sensor 2 heater determined by ECM according to the input signals.	
I/P PULLY SPD [rpm]			• Indicates the engine speed computed from the turbine revolution sensor signal.	
VEHICLE SPEED [km/h] or [MPH]	×		• The vehicle speed computed from the vehicle speed signal sent from TCM is displayed.	
IDL A/V LEARN [YET/CMPLT]			• Display the condition of idle air volume learning YET: Idle Air Volume Learning has not been performed yet. CMPLT: Idle Air Volume Learning has already been performed successfully.	
TRVL AFTER MIL [km] or [mile]			• Distance traveled while MIL is activated.	
A/F S1 HTR (B1) [%]			• Indicates A/F sensor 1 heater control value computed by ECM according to the input signals. • The current flow to the heater becomes larger as the value increases.	
AC PRESS SEN [V]	×		• The signal voltage from the refrigerant pressure sensor is displayed.	
VHCL SPEED SE [km/h] or [MPH]			• The vehicle speed computed from the vehicle speed signal sent from TCM is displayed.	
SET VHCL SPD [km/h] or [MPH]			• The preset vehicle speed is displayed.	
MAIN SW [ON/OFF]			• Indicates [ON/OFF] condition from MAIN switch signal.	
CANCEL SW [ON/OFF]			• Indicates [ON/OFF] condition from CANCEL switch signal.	

Monitored item [Unit]	ECM INPUT SIGNALS	MAIN SIGNALS	Description	Remarks
RESUME/ACC SW [ON/OFF]			• Indicates [ON/OFF] condition from RESUME/ACCELERATE switch signal.	
SET SW [ON/OFF]			• Indicates [ON/OFF] condition from SET/COAST switch signal.	
BRAKE SW1 [ON/OFF]			• Indicates [ON/OFF] condition from ASCD brake switch signal.	
BRAKE SW2 [ON/OFF]			• Indicates [ON/OFF] condition of stop lamp switch signal.	
VHCL SPD CUT [NON/CUT]			• Indicates the vehicle cruise condition. NON: Vehicle speed is maintained at the ASCD set speed. CUT: Vehicle speed increased to excessively high compared with the ASCD set speed, and ASCD operation is cut off.	
LO SPEED CUT [NON/CUT]			• Indicates the vehicle cruise condition. NON: Vehicle speed is maintained at the ASCD set speed. CUT: Vehicle speed decreased to excessively low compared with the ASCD set speed, and ASCD operation is cut off.	
AT OD MONITOR [ON/OFF]			• Indicates [ON/OFF] condition of A/T O/D according to the input signal from the TCM.	• For M/T models always “OFF” is displayed
AT OD CANCEL [ON/OFF]			• Indicates [ON/OFF] condition of A/T O/D cancel signal sent from the TCM.	• For M/T models always “OFF” is displayed
CRUISE LAMP [ON/OFF]			• Indicates [ON/OFF] condition of CRUISE lamp determined by the ECM according to the input signals.	
SET LAMP [ON/OFF]			• Indicates [ON/OFF] condition of SET lamp determined by the ECM according to the input signals.	
A/F ADJ-B1			• Indicates the correction factor stored in ECM. The factor is calculated from the difference between the target air/fuel ratio stored in ECM and the air/fuel ratio calculated from air fuel ratio (A/F) sensor 1 signal.	
A/F ADJ-B2				
Voltage [V]			• Voltage, frequency, duty cycle or pulse width measured by the probe.	• Only “#” is displayed if item is unable to be measured. • Figures with “#”s are temporary ones. They are the same figures as an actual piece of data which was just previously measured.
Frequency [msec], [Hz] or [%]				
DUTY-HI				
DUTY-LOW				
PLS WIDTH-HI				
PLS WIDTH-LOW				

NOTE:

Any monitored item that does not match the vehicle being diagnosed is deleted from the display automatically.

DATA MONITOR (SPEC) MODE

Monitored Item

Monitored item [Unit]	ECM input signals	Main signals	Description	Remarks
ENG SPEED [rpm]	×	×	• Indicates the engine speed computed from the signal of the crankshaft position sensor (POS) and camshaft position sensor (PHASE).	
MAS A/F SE-B1 [V]	×	×	• The signal voltage of the mass air flow sensor specification is displayed.	• When engine is running specification range is indicated.
B/FUEL SCHDL [msec]		×	• "Base fuel schedule" indicates the fuel injection pulse width programmed into ECM, prior to any learned on board correction.	• When engine is running specification range is indicated.
A/F ALPHA-B1 [%]		×	• The mean value of the air-fuel ratio feedback correction factor per cycle is indicated.	• When engine is running specification range is indicated. • This data also includes the data for the air-fuel ratio learning control.

NOTE:

Any monitored item that does not match the vehicle being diagnosed is deleted from the display automatically.

ACTIVE TEST MODE

Test Item

TEST ITEM	CONDITION	JUDGEMENT	CHECK ITEM (REMEDY)
FUEL INJECTION	• Engine: Return to the original trouble condition • Change the amount of fuel injection using CONSULT-II.	If trouble symptom disappears, see CHECK ITEM.	• Harness and connectors • Fuel injector • Air fuel ratio (A/F) sensor 1
IGNITION TIMING	• Engine: Return to the original trouble condition • Timing light: Set • Retard the ignition timing using CONSULT-II.	If trouble symptom disappears, see CHECK ITEM.	• Perform Idle Air Volume Learning.
POWER BALANCE	• Engine: After warming up, idle the engine. • A/C switch OFF • Shift lever: P or N (A/T, CVT), Neutral (M/T) • Cut off each fuel injector signal one at a time using CONSULT-II.	Engine runs rough or dies.	• Harness and connectors • Compression • Fuel injector • Power transistor • Spark plug • Ignition coil
COOLING FAN*	• Ignition switch: ON • Turn the cooling fan "LOW", "HI" and "OFF" with CONSULT-II.	Cooling fan moves and stops.	• Harness and connectors • Cooling fan relay • Cooling fan motor
ENG COOLANT TEMP	• Engine: Return to the original trouble condition • Change the engine coolant temperature using CONSULT-II.	If trouble symptom disappears, see CHECK ITEM.	• Harness and connectors • Engine coolant temperature sensor • Fuel injector
FUEL PUMP RELAY	• Ignition switch: ON (Engine stopped) • Turn the fuel pump relay ON and OFF using CONSULT-II and listen to operating sound.	Fuel pump relay makes the operating sound.	• Harness and connectors • Fuel pump relay
PURG VOL CONT/V	• Engine: After warming up, run engine at 1,500 rpm. • Change the EVAP canister purge volume control solenoid valve opening percent using CONSULT-II.	Engine speed changes according to the opening percent.	• Harness and connectors • EVAP canister purge volume control solenoid valve

TEST ITEM	CONDITION	JUDGEMENT	CHECK ITEM (REMEDY)
FUEL/T TEMP SEN	• Change the fuel tank temperature using CONSULT-II.		
VENT CONTROL/V	• Ignition switch: ON (Engine stopped) • Turn solenoid valve “ON” and “OFF” with the CONSULT-II and listen to operating sound.	Solenoid valve makes an operating sound.	• Harness and connectors • EVAP canister vent control valve
V/T ASSIGN ANGLE	• Engine: Return to the original trouble condition • Change intake valve timing using CONSULT-II.	If trouble symptom disappears, see CHECK ITEM.	• Harness and connectors • Intake valve timing control solenoid valve

*: Leaving cooling fan OFF with CONSULT-II while engine is running may cause the engine to overheat.

DTC & SRT CONFIRMATION MODE

SRT STATUS Mode
For details, refer to EC-47, "Emission-related Diagnostic Information".

SRT WORK SUPPORT Mode
This mode enables a technician to drive a vehicle to set the SRT while monitoring the SRT status.

DTC WORK SUPPORT Mode

Test mode	Test item	Corresponding DTC No.	Reference page
EVAPORATIVE SYSTEM	PURG FLOW P0441	P0441	EC-313
	EVP SML LEAK P0442/P1442*	P0442	EC-318
		P0455	EC-370
	EVP V/S LEAK P0456/P1456*	P0456	EC-377
	PURG VOL CN/V P1444	P0443	EC-325
A/F SEN1	A/F SEN1 (B1) P1276	P0130	EC-206
	A/F SEN1 (B1) P1278/P1279	P0133	EC-225
HO2S2	HO2S2 (B1) P0139	P0139	EC-250
	HO2S2 (B1) P1146	P0138	EC-240
	HO2S2 (B1) P1147	P0137	EC-233

*: DTC P1442 and P1456 does not apply to C11 models but appears in DTC Work Support Mode screens.

REAL TIME DIAGNOSIS IN DATA MONITOR MODE (RECORDING VEHICLE DATA)

Description
CONSULT-II has two kinds of triggers and they can be selected by touching “SETTING” in “DATA MONITOR” mode.

1. “AUTO TRIG” (Automatic trigger):
   - The malfunction will be identified on the CONSULT-II screen in real time.
     In other words, DTC/1st trip DTC and malfunction item will be displayed if the malfunction is detected by ECM.
     At the moment a malfunction is detected by ECM, “MONITOR” in “DATA MONITOR” screen is changed to “Recording Data ... xx%” as shown at right, and the data after the malfunction detection is recorded. Then when the percentage reached 100%, “REAL-TIME DIAG” screen is displayed. If “STOP” is touched on the screen during “Recording Data ... xx%”, “REAL-TIME DIAG” screen is also displayed.

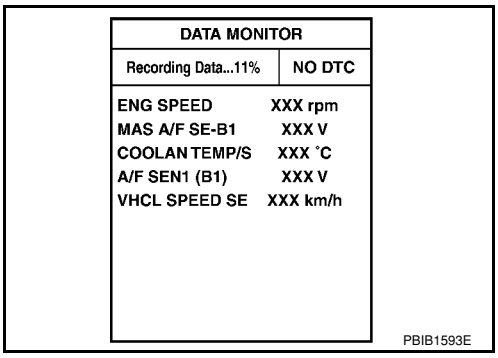

The recording time after the malfunction detection and the recording speed can be changed by “TRIGGER POINT” and “Recording Speed”. Refer to CONSULT-II Operation Manual.

2. “MANU TRIG” (Manual trigger):
   - DTC/1st trip DTC and malfunction item will not be displayed automatically on CONSULT-II screen even though a malfunction is detected by ECM.
     DATA MONITOR can be performed continuously even though a malfunction is detected.

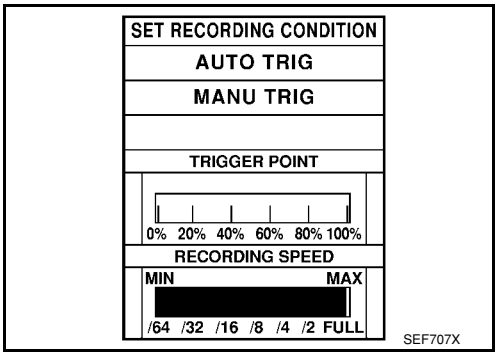

Operation

1. “AUTO TRIG”
   - While trying to detect the DTC/1st trip DTC by performing the DTC Confirmation Procedure, be sure to select to “DATA MONITOR (AUTO TRIG)” mode. You can confirm the malfunction at the moment it is detected.
   - While narrowing down the possible causes, CONSULT-II should be set in “DATA MONITOR (AUTO TRIG)” mode, especially in case the incident is intermittent.
     When you are inspecting the circuit by gently shaking (or twisting) the suspicious connectors, components and harness in the DTC Confirmation Procedure, the moment a malfunction is found the DTC/1st trip DTC will be displayed. (Refer to “INCIDENT SIMULATION TESTS” in GI-25, "How to Perform Efficient Diagnosis for an Electrical Incident".)
2. “MANU TRIG”
   - If the malfunction is displayed as soon as “DATA MONITOR” is selected, reset CONSULT-II to “MANU TRIG”. By selecting “MANU TRIG” you can monitor and store the data. The data can be utilized for further diagnosis, such as a comparison with the value for the normal operating condition.

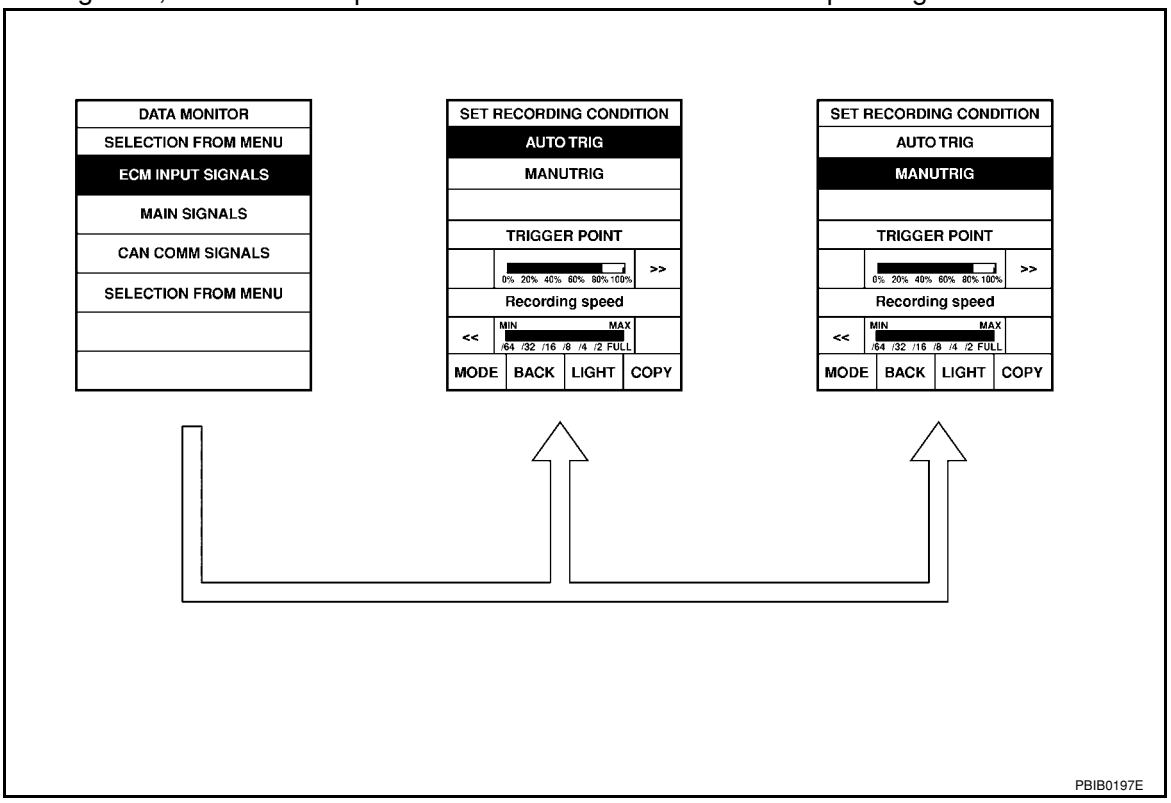

Generic Scan Tool (GST) Function

INFOID:0000000001702596

DESCRIPTION

Generic Scan Tool (OBDII scan tool) complying with SAE J1978 has 8 different functions explained below.
ISO9141 is used as the protocol.
The name GST or Generic Scan Tool is used in this service manual.

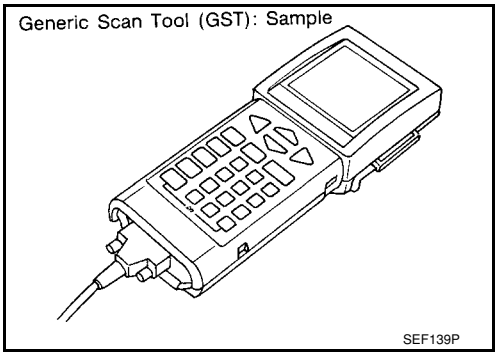

FUNCTION

Diagnostic test mode		Function
Service $01	READINESS TESTS	This diagnostic service gains access to current emission-related data values, including analog inputs and outputs, digital inputs and outputs, and system status information.
Service $02	(FREEZE DATA)	This diagnostic service gains access to emission-related data value which were stored by ECM during the freeze frame. For details, refer to EC-109, "CONSULT-II Function (ENGINE)".
Service $03	DTCs	This diagnostic service gains access to emission-related power train trouble codes which were stored by ECM.
Service $04	CLEAR DIAG INFO	This diagnostic service can clear all emission-related diagnostic information. This includes: • Clear number of diagnostic trouble codes (Service $01) • Clear diagnostic trouble codes (Service $03) • Clear trouble code for freeze frame data (Service $01) • Clear freeze frame data (Service $02) • Reset status of system monitoring test (Service $01) • Clear on board monitoring test results (Service $06 and $07)
Service $06	(ON BOARD TESTS)	This diagnostic service accesses the results of on board diagnostic monitoring tests of specific components/systems that are not continuously monitored.
Service $07	(ON BOARD TESTS)	This diagnostic service enables the off board test drive to obtain test results for emission-related powertrain components/systems that are continuously monitored during normal driving conditions.
Service $08	—	This diagnostic service can close EVAP system in ignition switch ON position (Engine stopped). When this diagnostic service is performed, EVAP canister vent control valve can be closed. In the following conditions, this diagnostic service cannot function. • Low ambient temperature • Low battery voltage • Engine running • Ignition switch OFF • Low fuel temperature • Too much pressure is applied to EVAP system
Service $09	(CALIBRATION ID)	This diagnostic service enables the off-board test device to request specific vehicle information such as Vehicle Identification Number (VIN) and Calibration IDs.

INSPECTION PROCEDURE

1. Turn ignition switch OFF.
2. Connect GST to data link connector (1), which is located under LH dash panel.

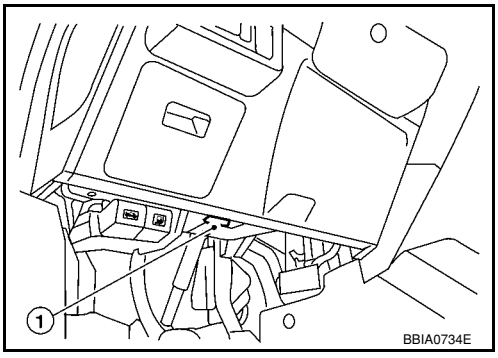

3. Turn ignition switch ON.
4. Enter the program according to instruction on the screen or in the operation manual.
   (*: Regarding GST screens in this section, sample screens are shown.)

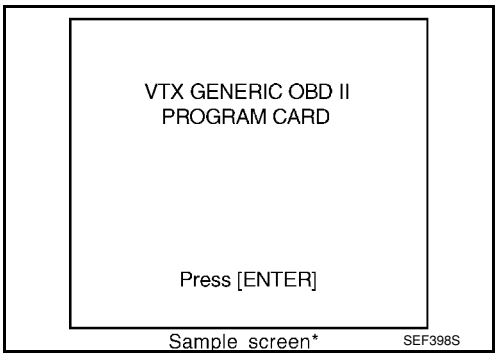

5. Perform each diagnostic service according to each service procedure.
   For further information, see the GST Operation Manual of the tool maker.

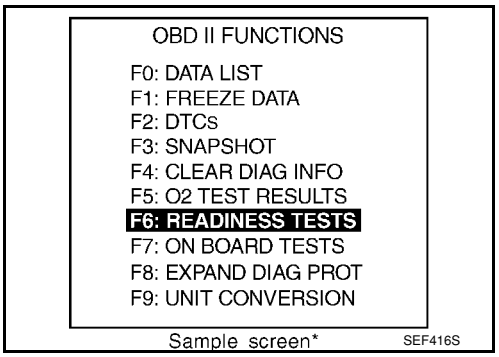

CONSULT-II Reference Value in Data Monitor Mode

INFOID:0000000001702597

Remarks:
- Specification data are reference values.
- Specification data are output/input values which are detected or supplied by the ECM at the connector.
  * Specification data may not be directly related to their components signals/values/operations.
  i.e. Adjust ignition timing with a timing light before monitoring IGN TIMING, because the monitor may show the specification data in spite of the ignition timing not being adjusted to the specification data. This IGN TIMING monitors the data calculated by the ECM according to the signals input from the camshaft position sensor and other ignition timing related sensors.

MONITOR ITEM	CONDITION		SPECIFICATION
ENG SPEED	• Run engine and compare CONSULT-II value with the tachometer indication.		Almost the same speed as the tachometer indication.
MAS A/F SE-B1	See EC-127.		
B/FUEL SCHDL	See EC-127.		
A/F ALPHA-B1	See EC-127.		
COOLAN TEMP/S	• Engine: After warming up		More than 70°C (158°F)
A/F SEN1 (B1)	• Engine: After warming up	Maintaining engine speed at 2,000 rpm	Fluctuates around 2.2V
HO2S2 (B1)	• Revving engine from idle to 3,000 rpm quickly after the following conditions are met - Engine: After warming up - Keeping the engine speed between 3,500 and 4,000 rpm for 1 minute and at idle for 1 minute under no load		0 - 0.3V ←→ Approx. 0.6 - 1.0V
HO2S2 MNTR (B1)			LEAN ←→ RICH
VHCL SPEED SE	• Turn drive wheels and compare CONSULT-II value with the speedometer indication.		Almost the same speed as the speedometer indication.
BATTERY VOLT	• Ignition switch: ON (Engine stopped)		11 - 14V
ACCEL SEN 1 ACCEL SEN 2*	• Ignition switch: ON (Engine stopped)	Accelerator pedal: Fully released	0.6 - 0.9V
		Accelerator pedal: Fully depressed	4.0 - 4.8V
EVAP SYS PRES	• Ignition switch: ON		Approx. 1.8 - 4.8V

MONITOR ITEM	CONDITION		SPECIFICATION
THRTL SEN 1 THRTL SEN 2*	• Ignition switch: ON (Engine stopped) • Shift lever: D (A/T, CVT), 1st (M/T)	Accelerator pedal: Fully released	More than 0.36V
		Accelerator pedal: Fully depressed	Less than 4.75V
START SIGNAL	• Ignition switch: ON → START → ON		OFF → ON → OFF
CLSD THL POS	• Ignition switch: ON	Accelerator pedal: Fully released	ON
		Accelerator pedal: Slightly depressed	OFF
AIR COND SIG	• Engine: After warming up, idle the engine	Air conditioner switch: OFF	OFF
		Air conditioner switch: ON (Compressor operates.)	ON
P/N POSI SW	• Ignition switch: ON	Shift lever: P or N (A/T, CVT), Neutral (M/T)	ON
		Shift lever: Except above	OFF
PW/ST SIGNAL	• Engine: After warming up, idle the engine	Steering wheel: Not being turned	OFF
		Steering wheel: Being turned	ON
LOAD SIGNAL	• Ignition switch: ON	Rear window defogger switch: ON and/or Lighting switch: 2nd	ON
		Rear window defogger switch and lighting switch: OFF	OFF
IGNITION SW	• Ignition switch: ON → OFF → ON		ON → OFF → ON
HEATER FAN SW	• Ignition switch: ON	Heater fan: Operating	ON
		Heater fan: Not operating	OFF
BRAKE SW	• Ignition switch: ON	Brake pedal: Fully released	OFF
		Brake pedal: Slightly depressed	ON
INJ PULSE-B1	• Engine: After warming up • Air conditioner switch: OFF • Shift lever: P or N (A/T, CVT), Neutral (M/T) • No load	Idle	2.0 - 3.0 msec
		2,000 rpm	1.9 - 2.9 msec
IGN TIMING	• Engine: After warming up • Air conditioner switch: OFF • Shift lever: P or N (A/T, CVT), Neutral (M/T) • No load	Idle	8° - 18° BTDC
		2,000 rpm	25° - 45° BTDC
CAL/LD VALUE	• Engine: After warming up • Air conditioner switch: OFF • Shift lever: P or N (A/T, CVT), Neutral (M/T) • No load	Idle	10% - 35%
		2,500 rpm	10% - 35%
MASS AIRFLOW	• Engine: After warming up • Air conditioner switch: OFF • Shift lever: P or N (A/T, CVT), Neutral (M/T) • No load	Idle	1.0 - 4.0 g·m/s
		2,500 rpm	2.0 - 10.0 g·m/s
PURG VOL C/V	• Engine: After warming up • Air conditioner switch: OFF • Shift lever: P or N (A/T, CVT), Neutral (M/T) • No load	Idle (Accelerator pedal is not depressed even slightly, after engine starting)	0%
		2,000 rpm	0 - 50%
INT/V TIM (B1)	• Engine: After warming up • Air conditioner switch: OFF • Shift lever: P or N (A/T, CVT), Neutral (M/T) • No load	Idle	–5° - 5°CA
		When revving engine up to 2,000 rpm quickly	Approx. 0° - 40°CA

MONITOR ITEM	CONDITION		SPECIFICATION
INT/V SOL (B1)	• Engine: After warming up • Air conditioner switch: OFF • Shift lever: P or N (A/T, CVT), Neutral (M/T) • No load	Idle	0% - 2%
		When revving engine up to 2,000 rpm quickly	Approx. 0% - 90%
AIR COND RLY	• Engine: After warming up, idle the engine	Air conditioner switch: OFF	OFF
		Air conditioner switch: ON (Compressor operates)	ON
FUEL PUMP RLY	• For 1 second after turning ignition switch ON • Engine running or cranking		ON
	• Except above conditions		OFF
VENT CONT/V	• Ignition switch: ON		OFF
THRTL RELAY	• Ignition switch: ON		ON
COOLING FAN	• Engine: After warming up, idle the engine • Air conditioner switch: OFF	Engine coolant temperature: 97°C (207°F) or less	OFF
		Engine coolant temperature: Between 98°C (208°F) and 99°C (210°F)	LOW
		Engine coolant temperature: 100°C (212°F) or more	HIGH
HO2S2 HTR (B1)	• Below 3,600 rpm after the following conditions are met. - Engine: After warming up - Keeping the engine speed between 3,500 and 4,000 rpm for 1 minute and at idle for 1 minute under no load		ON
	• Engine speed: Above 3,600 rpm		OFF
I/P PULLY SPD	• Vehicle speed: More than 20 km/h (12 MPH)		Almost the same speed as the tachometer indication
VEHICLE SPEED	• Turn drive wheels and compare CONSULT-II value with the speedometer indication.		Almost the same speed as the speedometer indication
TRVL AFTER MIL	• Ignition switch: ON	Vehicle has traveled after MIL has turned ON.	0 - 65,535 km (0 - 40,723 mile)
A/F S1 HTR (B1)	• Engine: After warming up, idle the engine (More than 140 seconds after starting engine.)		4 - 100%
AC PRESS SEN	• Engine: Idle • Air conditioner switch: ON (Compressor operates)		1.0 - 4.0V
VHCL SPEED SE	• Turn drive wheels and compare speedometer indication with the CONSULT-II value.		Almost the same speed as the speedometer indication
SET VHCL SPD	• Engine: Running	ASCD: Operating	The preset vehicle speed is displayed.
MAIN SW	• Ignition switch: ON	MAIN switch: Pressed	ON
		MAIN switch: Released	OFF
CANCEL SW	• Ignition switch: ON	CANCEL switch: Pressed	ON
		CANCEL switch: Released	OFF
RESUME/ACC SW	• Ignition switch: ON	RESUME/ACCELERATE switch: Pressed	ON
		RESUME/ACCELERATE switch: Released	OFF
SET SW	• Ignition switch: ON	SET/COAST switch: Pressed	ON
		SET/COAST switch: Released	OFF

MONITOR ITEM	CONDITION		SPECIFICATION
BRAKE SW1	• Ignition switch: ON	• Brake pedal: Fully released (A/T, CVT) • Brake pedal and clutch pedal: Fully released (M/T)	ON
		• Brake pedal: Slightly depressed (A/T, CVT) • Brake pedal and/or clutch pedal: Slightly depressed (M/T)	OFF
BRAKE SW2	• Ignition switch: ON	Brake pedal: Fully released	OFF
		Brake pedal: Slightly depressed	ON
CRUISE LAMP	• Ignition switch: ON	MAIN switch: Pressed at the 1st time → at the 2nd time	ON → OFF
SET LAMP	• MAIN switch: ON • Vehicle speed: Between 40 km/h (25 MPH) and 144 km/h (89 MPH)	ACSD: Operating	ON
		ASCD: Not operating	OFF

*: Accelerator pedal position sensor 2 signal and throttle position sensor 2 signal are converted by ECM internally. Thus, they differ from ECM terminals voltage signal.

Major Sensor Reference Graph in Data Monitor Mode

INFOID:0000000001702598

The following are the major sensor reference graphs in “DATA MONITOR” mode.

CLSD THL POS, ACCEL SEN 1, THRTL SEN 1

Below is the data for “CLSD THL POS”, “ACCEL SEN 1” and “THRTL SEN 1” when depressing the accelerator pedal with the ignition switch ON and with shift lever in D position (A/T, CVT), 1st position (M/T).
The signal of “ACCEL SEN 1” and “THRTL SEN 1” should rise gradually without any intermittent drop or rise after “CLSD THL POS” is changed from ON to OFF.

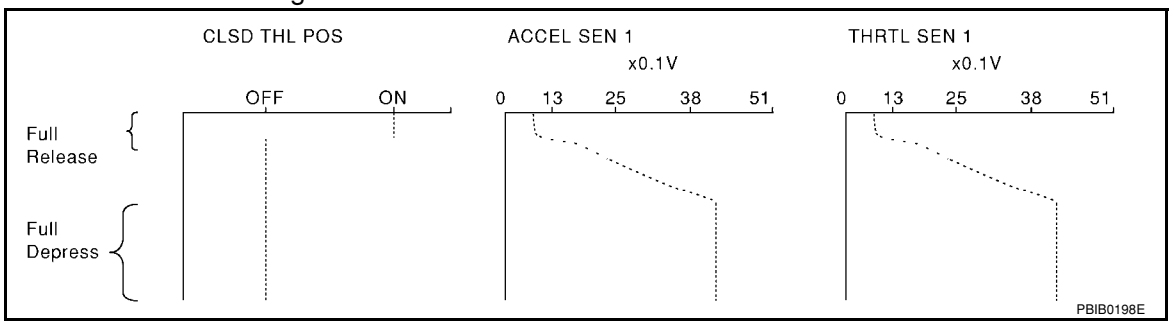

ENG SPEED, MAS A/F SE-B1, THRTL SEN 1, HO2S2 (B1), INJ PULSE-B1

Below is the data for “ENG SPEED”, “MAS A/F SE-B1”, “THRTL SEN 1”, “HO2S2 (B1)” and “INJ PULSE-B1” when revving engine quickly up to 4,800 rpm under no load after warming up engine sufficiently.

Each value is for reference, the exact value may vary.

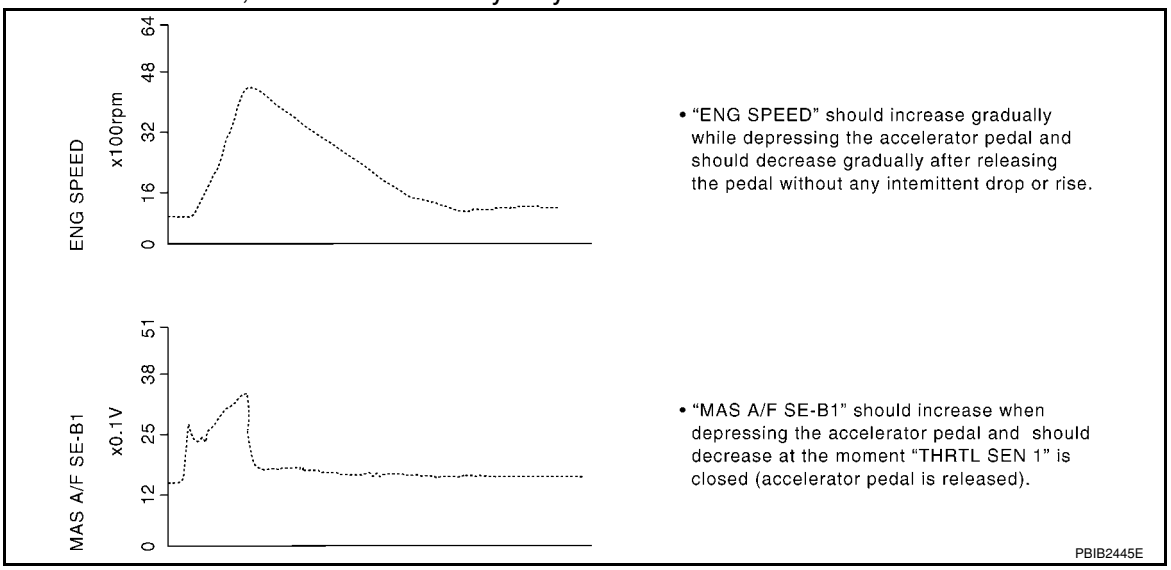

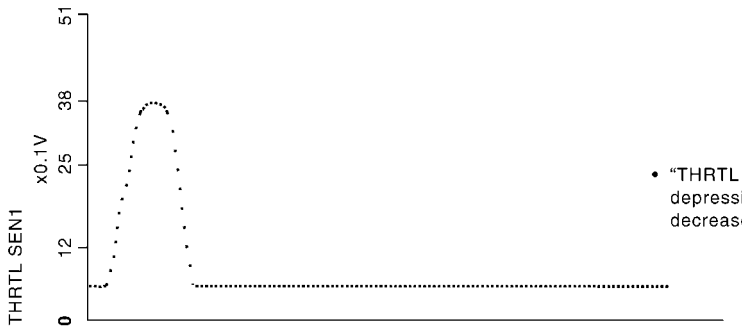

- "THRTL SEN1" should increase while depressing the accelerator pedal and should decrease while releasing it.

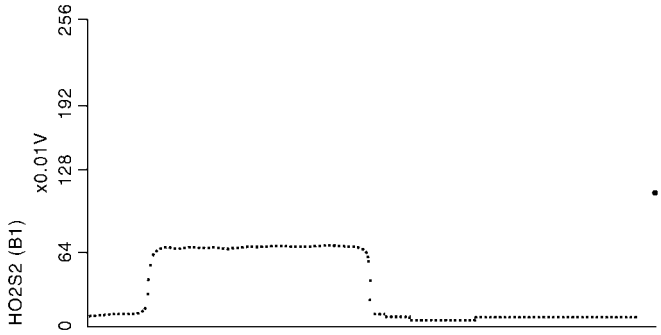

- "HO2S2 (B1)" may increase immediately after depressing the accelerator pedal and may decrease after releasing the pedal.

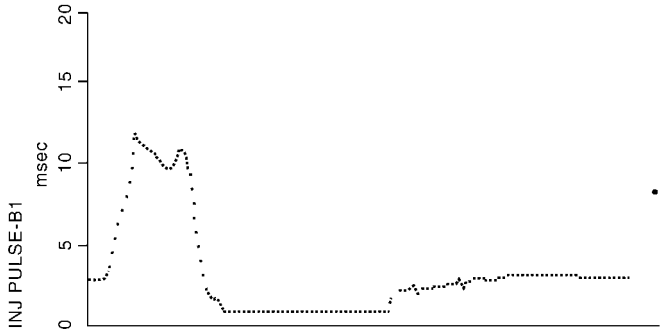

- "INJ PULSE-B1" should increase when depressing the accelerator pedal and should decrease when the pedal is released.

PBIB2099E

TROUBLE DIAGNOSIS - SPECIFICATION VALUE

Description

INFOID:0000000001702599

The specification (SP) value indicates the tolerance of the value that is displayed in “DATA MONITOR (SPEC)” mode of CONSULT-II during normal operation of the Engine Control System. When the value in “DATA MONITOR (SPEC)” mode is within the SP value, the Engine Control System is confirmed OK. When the value in “DATA MONITOR (SPEC)” mode is NOT within the SP value, the Engine Control System may have one or more malfunctions.
The SP value is used to detect malfunctions that may affect the Engine Control System, but will not light the MIL.
The SP value will be displayed for the following three items:
- B/FUEL SCHDL (The fuel injection pulse width programmed into ECM prior to any learned on board correction)
- A/F ALPHA-B1 (The mean value of air-fuel ratio feedback correction factor per cycle)
- MAS A/F SE-B1 (The signal voltage of the mass air flow sensor)

Testing Condition

INFOID:0000000001702600

- Vehicle driven distance: More than 5,000 km (3,107 miles)
- Barometric pressure: 98.3 - 104.3 kPa (1.003 - 1.064 kg/cm^2, 14.25 - 15.12 psi)
- Atmospheric temperature: 20 - 30°C (68 - 86°F)
- Engine coolant temperature: 75 - 95°C (167 - 203°F)
- Transmission: Warmed-up
  - A/T and CVT models: After the engine is warmed up to normal operating temperature, drive vehicle until “FLUID TEMP SE” (A/T or CVT) fluid temperature sensor signal) indicates more than 60°C (140°F).
  - M/T models: After the engine is warmed up to normal operating temperature, drive vehicle for 5 minutes.
- Electrical load: Not applied
  - Rear window defogger switch, air conditioner switch, lighting switch are OFF. Steering wheel is straight ahead.
- Engine speed: Idle

Inspection Procedure

INFOID:0000000001702601

NOTE:
Perform “DATA MONITOR (SPEC)” mode in maximum scale display.

1. Perform EC-69, "Basic Inspection".
2. Confirm that the testing conditions indicated above are met.
3. Select “B/FUEL SCHDL”, “A/F ALPHA-B1” and “MAS A/F SE-B1” in “DATA MONITOR (SPEC)” mode with CONSULT-II.
4. Make sure that monitor items are within the SP value.
5. If NG, go to EC-127, "Diagnosis Procedure".

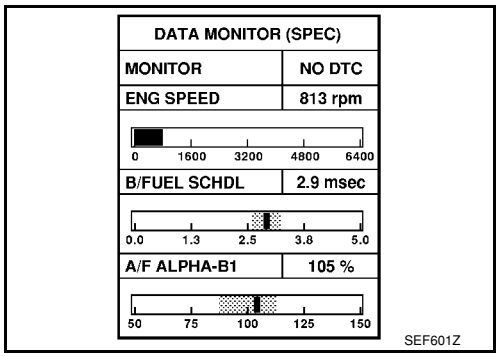

Diagnosis Procedure

INFOID:0000000001702602

OVERALL SEQUENCE

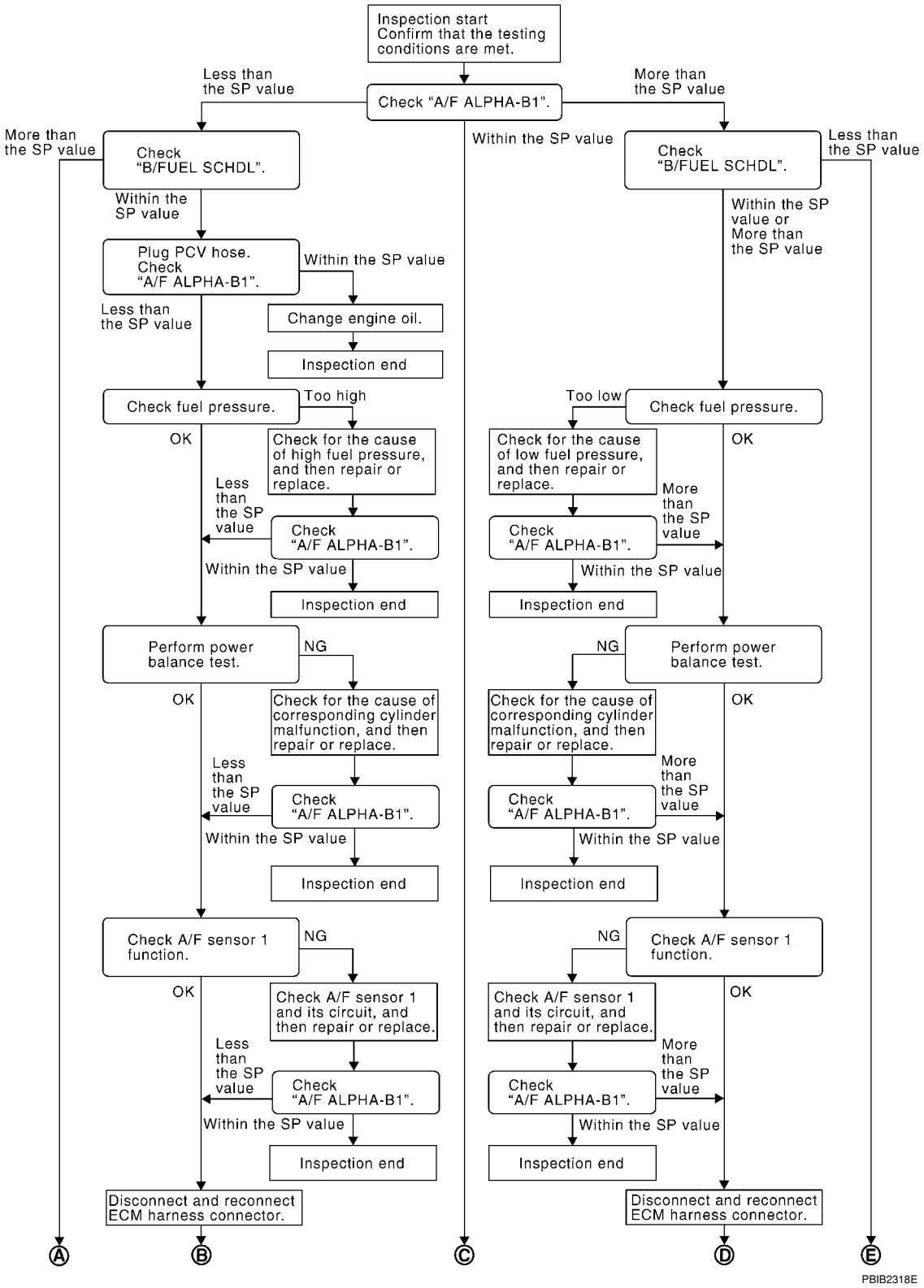
Inspection start
Confirm that the testing conditions are met.
Check "A/F ALPHA-B1".
Less than the SP value
More than the SP value
Within the SP value
Check "B/FUEL SCHDL".
More than the SP value
Less than the SP value
Within the SP value
Plug PCV hose. Check "A/F ALPHA-B1".
Within the SP value
Change engine oil.
Inspection end
Less than the SP value
Check fuel pressure.
Too high
Check for the cause of high fuel pressure, and then repair or replace.
Check "A/F ALPHA-B1".
Less than the SP value
Within the SP value
Inspection end
OK
Perform power balance test.
NG
Check for the cause of corresponding cylinder malfunction, and then repair or replace.
Check "A/F ALPHA-B1".
Less than the SP value
Within the SP value
Inspection end
OK
Check A/F sensor 1 function.
NG
Check A/F sensor 1 and its circuit, and then repair or replace.
Check "A/F ALPHA-B1".
Less than the SP value
Within the SP value
Inspection end
OK
Disconnect and reconnect ECM harness connector.
Check "B/FUEL SCHDL".
Less than the SP value
Within the SP value or More than the SP value
Check fuel pressure.
Too low
Check for the cause of low fuel pressure, and then repair or replace.
Check "A/F ALPHA-B1".
More than the SP value
Within the SP value
Inspection end
OK
Perform power balance test.
NG
Check for the cause of corresponding cylinder malfunction, and then repair or replace.
Check "A/F ALPHA-B1".
More than the SP value
Within the SP value
Inspection end
OK
Check A/F sensor 1 function.
NG
Check A/F sensor 1 and its circuit, and then repair or replace.
Check "A/F ALPHA-B1".
More than the SP value
Within the SP value
Inspection end
OK
Disconnect and reconnect ECM harness connector.
A
B
C
D
E
PBIB2318E

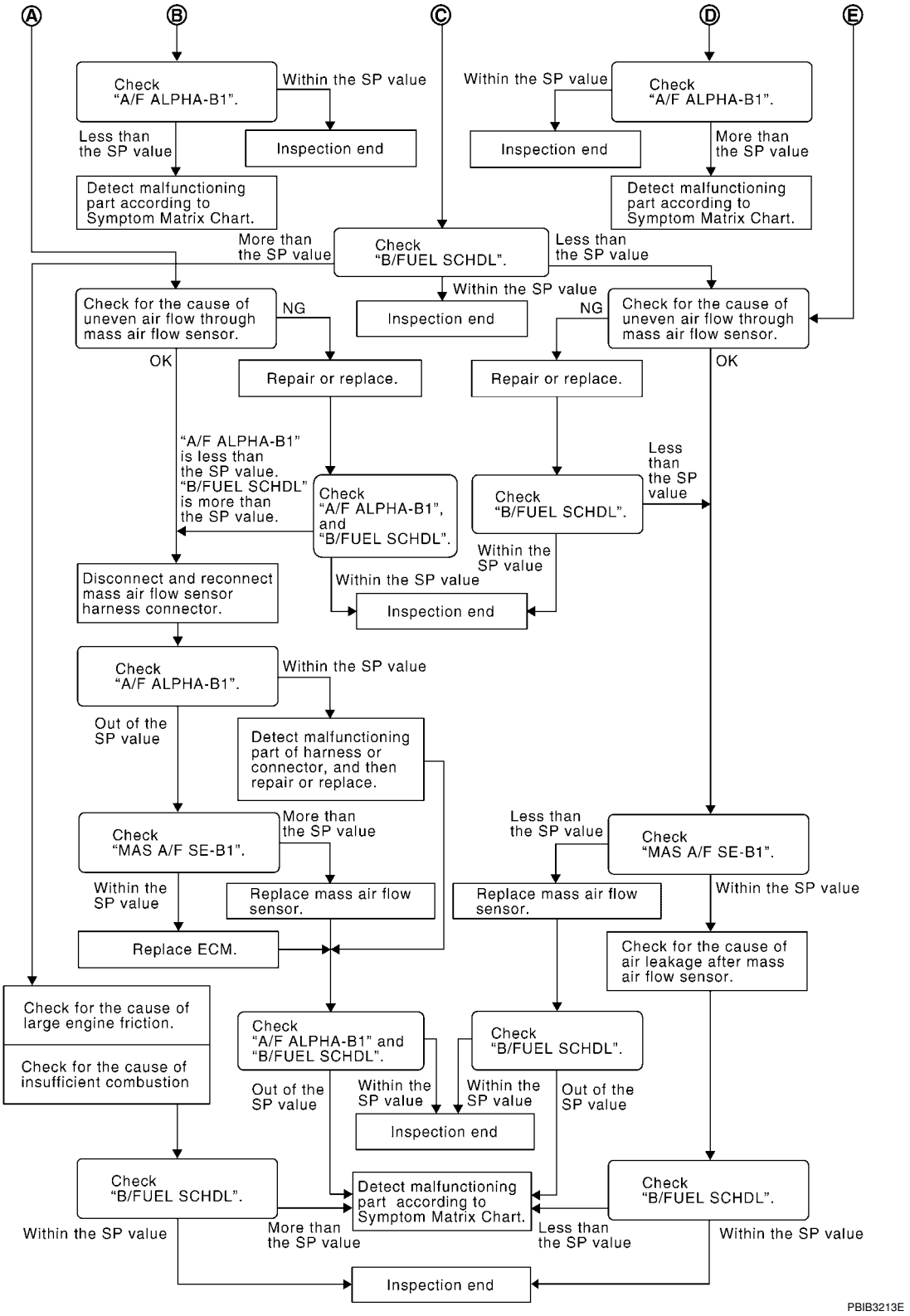

DETAILED PROCEDURE

1.CHECK "A/F ALPHA-B1"

1. Start engine.
2. Confirm that the testing conditions are met. Refer to EC-127, "Testing Condition".

3. Select “A/F ALPHA-B1” in “DATA MONITOR (SPEC)” mode, and make sure that the indication is within the SP value.
   NOTE:
   Check “A/F ALPHA-B1” for approximately 1 minute because they may fluctuate. It is NG if the indication is out of the SP value even a little.

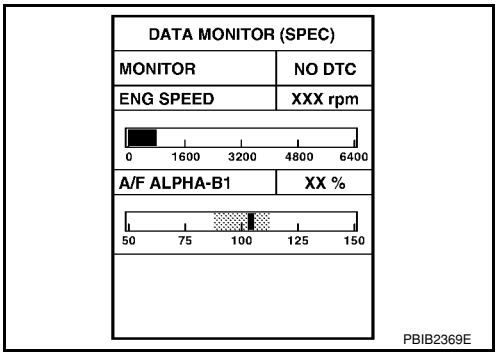

OK or NG

OK >> GO TO 17.
NG (Less than the SP value)>>GO TO 2.
NG (More than the SP value)>>GO TO 3.

2. CHECK “B/FUEL SCHDL”

Select “B/FUEL SCHDL” in “DATA MONITOR (SPEC)” mode, and make sure that the indication is within the SP value.

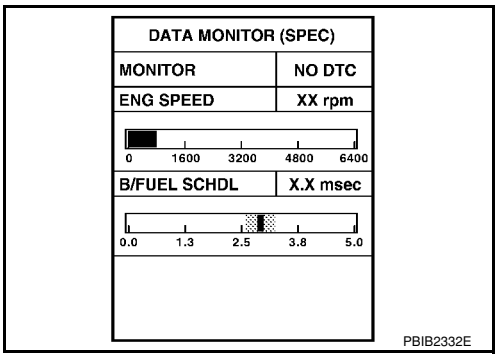

OK or NG

OK >> GO TO 4.
NG (More than the SP value)>>GO TO 19.

3. CHECK “B/FUEL SCHDL”

Select “B/FUEL SCHDL” in “DATA MONITOR (SPEC)” mode, and make sure that the indication is within the SP value.

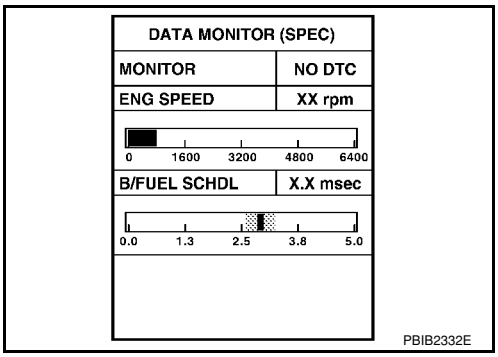

OK or NG

OK >> GO TO 6.
NG (More than the SP value)>>GO TO 6.
NG (Less than the SP value)>>GO TO 25.

4. CHECK “A/F ALPHA-B1”

1. Stop the engine.
2. Disconnect PCV hose, and then plug it.
3. Start engine.
4. Select “A/F ALPHA-B1” in “DATA MONITOR (SPEC)” mode, and make sure that the indication is within the SP value.

OK or NG

OK >> GO TO 5.
NG >> GO TO 6.

5. CHANGE ENGINE OIL

1. Stop the engine.
2. Change engine oil. Refer to LU-7, "Changing Engine Oil".
   NOTE:
   This symptom may occur when a large amount of gasoline is mixed with engine oil because of driving conditions (such as when engine oil temperature does not rise enough since a journey distance is too short during winter). The symptom will not be detected after changing engine oil or changing driving condition.

>> **INSPECTION END**

6. CHECK FUEL PRESSURE

Check fuel pressure. (Refer to EC-78, "Fuel Pressure Check".)

OK or NG

OK >> GO TO 9.
NG (Fuel pressure is too high)>>Replace fuel pressure regulator, refer to EC-78, "Fuel Pressure Check". GO TO 8.
NG (Fuel pressure is too low)>>GO TO 7.

7. DETECT MALFUNCTIONING PART

1. Check the following.
- Clogged and bent fuel hose and fuel tube
- Clogged fuel filter
- Fuel pump and its circuit (Refer to EC-526.)
2. If NG, repair or replace the malfunctioning part. (Refer to EC-78, "Fuel Pressure Check".)
   If OK, replace fuel pressure regulator.

>> GO TO 8.

8. CHECK “A/F ALPHA-B1”

1. Start engine.
2. Select “A/F ALPHA-B1” in “DATA MONITOR (SPEC)” mode, and make sure that the indication is within the SP value.

OK or NG

OK >> **INSPECTION END**
NG >> GO TO 9.

9. PERFORM POWER BALANCE TEST

1. Perform “POWER BALANCE” in “ACTIVE TEST” mode.
2. Make sure that the each cylinder produces a momentary engine speed drop.

OK or NG

OK >> GO TO 12.
NG >> GO TO 10.

ACTIVE TEST	
POWER BALANCE	
MONITOR	
ENG SPEED	XXX rpm
MAS A/F SE-B1	XXX V

PBIB0133E

10. DETECT MALFUNCTIONING PART

1. Check the following.
- Ignition coil and its circuit (Refer to EC-531.)
- Fuel injector and its circuit (Refer to EC-521.)
- Intake air leakage
- Low compression pressure (Refer to EM-62, "On-Vehicle Service".)
2. If NG, repair or replace the malfunctioning part.
   If OK, replace fuel injector. (It may be caused by leakage from fuel injector or clogging.)

>> GO TO 11.

11. CHECK “A/F ALPHA-B1”

1. Start engine.
2. Select “A/F ALPHA-B1” in “DATA MONITOR (SPEC)” mode, and make sure that the indication is within the SP value.

OK or NG

OK >> **INSPECTION END**
NG >> GO TO 12.

12. CHECK A/F SENSOR 1 FUNCTION

Perform all DTC Confirmation Procedure related with A/F sensor 1.
- For DTC P0130, refer to EC-206, "DTC Confirmation Procedure".
- For DTC P0131, refer to EC-213, "DTC Confirmation Procedure".
- For DTC P0132, refer to EC-219, "DTC Confirmation Procedure".
- For DTC P0133, refer to EC-225, "DTC Confirmation Procedure".
- For DTC P2A00, refer to EC-500, "DTC Confirmation Procedure".

OK or NG

OK >> GO TO 15.
NG >> GO TO 13.

13. CHECK A/F SENSOR 1 CIRCUIT

Perform Diagnostic Procedure according to corresponding DTC.

>> GO TO 14.

14. CHECK “A/F ALPHA-B1”

1. Start engine.
2. Select “A/F ALPHA-B1” in “DATA MONITOR (SPEC)” mode, and make sure that the indication is within the SP value.

OK or NG

OK >> **INSPECTION END**
NG >> GO TO 15.

15. DISCONNECT AND RECONNECT ECM HARNESS CONNECTOR

1. Stop the engine.
2. Disconnect ECM harness connector. Check pin terminal and connector for damage, and then reconnect it.

>> GO TO 16.

16. CHECK “A/F ALPHA-B1”

1. Start engine.
2. Select “A/F ALPHA-B1” in “DATA MONITOR (SPEC)” mode, and make sure that the indication is within the SP value.

OK or NG

OK >> **INSPECTION END**
NG >> Detect malfunctioning part according to EC-88, "Symptom Matrix Chart".

17. CHECK “B/FUEL SCHDL”

Select “B/FUEL SCHDL” in “DATA MONITOR (SPEC)” mode, and make sure that the indication is within the SP value.

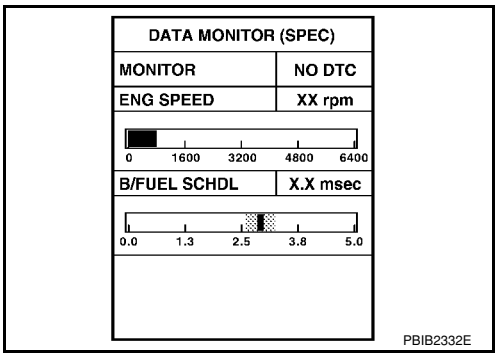

OK or NG

OK >> **INSPECTION END**
NG (More than the SP value)>>GO TO 18.
NG (Less than the SP value)>>GO TO 25.

18. DETECT MALFUNCTIONING PART

1. Check for the cause of large engine friction. Refer to the following.
- Engine oil level is too high
- Engine oil viscosity
- Belt tension of alternator, A/C compressor, etc. is excessive
- Noise from engine

- Noise from transmission, etc.
2. Check for the cause of insufficient combustion. Refer to the following.
- Valve clearance malfunction
- Intake valve timing control function malfunction
- Camshaft sprocket installation malfunction, etc.

>> Repair or replace malfunctioning part, and then GO TO 30.

19. CHECK INTAKE SYSTEM

Check for the cause of uneven air flow through mass air flow sensor. Refer to the following.
- Crushed air ducts
- Malfunctioning seal of air cleaner element
- Uneven dirt of air cleaner element
- Improper specification of intake air system

OK or NG

OK >> GO TO 21.
NG >> Repair or replace malfunctioning part, and then GO TO 20.

20. CHECK "A/F ALPHA-B1" AND "B/FUEL SCHDL"

Select "A/F ALPHA-B1" and "B/FUEL SCHDL" in "DATA MONITOR (SPEC)" mode, and make sure that the each indication is within the SP value.

OK or NG

OK >> **INSPECTION END**
NG ("B/FUEL SCHDL" is more, "A/F ALPHA-B1" is less than the SP value)>>GO TO 21.

21. DISCONNECT AND RECONNECT MASS AIR FLOW SENSOR HARNESS CONNECTOR

1. Stop the engine.
2. Disconnect mass air flow sensor harness connector. Check pin terminal and connector for damage and then reconnect it again.

>> GO TO 22.

22. CHECK "A/F ALPHA-B1"

1. Start engine.
2. Select "A/F ALPHA-B1" in "DATA MONITOR (SPEC)" mode, and make sure that the indication is within the SP value.

OK or NG

OK >> 1. Detect malfunctioning part of mass air flow sensor circuit and repair it. Refer to EC-167.
2. GO TO 29.
NG >> GO TO 23.

23. CHECK "MAS A/F SE-B1"

Select "MAS A/F SE-B1" in "DATA MONITOR (SPEC)" mode, and make sure that the indication is within the SP value.

OK or NG

OK >> GO TO 24.
NG (More than the SP value)>>Replace mass air flow sensor, and then GO TO 29.

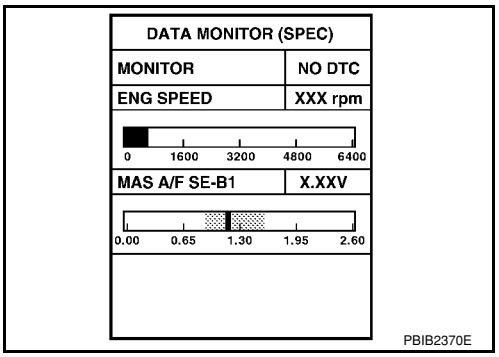

24. REPLACE ECM

1. Replace ECM.
2. Perform initialization of NVIS(NATS) system and registration of all NVIS(NATS) ignition key IDs. Refer to BL-211, "ECM Re-communicating Function".

3. Perform EC-75, "VIN Registration".
4. Perform EC-76, "Accelerator Pedal Released Position Learning".
5. Perform EC-76, "Throttle Valve Closed Position Learning".
6. Perform EC-76, "Idle Air Volume Learning".

>> GO TO 29.

25. CHECK INTAKE SYSTEM

Check for the cause of uneven air flow through mass air flow sensor. Refer to the following.
- Crushed air ducts
- Malfunctioning seal of air cleaner element
- Uneven dirt of air cleaner element
- Improper specification of intake air system

OK or NG

OK >> GO TO 27.
NG >> Repair or replace malfunctioning part, and then GO TO 26.

26. CHECK "B/FUEL SCHDL"

Select "B/FUEL SCHDL" in "DATA MONITOR (SPEC)" mode, and make sure that the indication is within the SP value.

OK or NG

OK >> **INSPECTION END**
NG (Less than the SP value)>>GO TO 27.

27. CHECK "MAS A/F SE-B1"

Select "MAS A/F SE-B1" in "DATA MONITOR (SPEC)" mode, and make sure that the indication is within the SP value.

OK or NG

OK >> GO TO 28.
NG (Less than the SP value)>>Replace mass air flow sensor, and then GO TO 30.

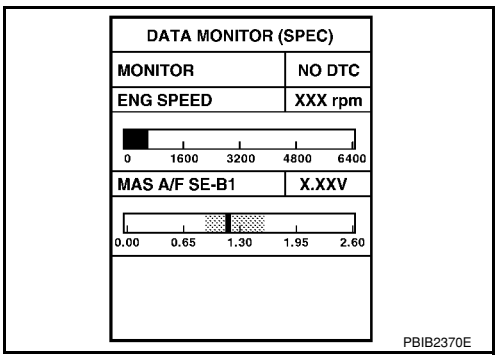

28. CHECK INTAKE SYSTEM

Check for the cause of air leak after the mass air flow sensor. Refer to the following.
- Disconnection, looseness, and cracks in air duct
- Looseness of oil filler cap
- Disconnection of oil level gauge
- Open stuck, breakage, hose disconnection, or cracks of PCV valve
- Disconnection or cracks of EVAP purge hose, open stuck of EVAP canister purge volume control solenoid valve
- Malfunctioning seal of rocker cover gasket
- Disconnection, looseness, or cracks of hoses, such as vacuum hose, connecting to intake air system parts
- Malfunctioning seal of intake air system, etc.

>> GO TO 30.

29. CHECK "A/F ALPHA-B1" AND "B/FUEL SCHDL"

Select "A/F ALPHA-B1" and "B/FUEL SCHDL" in "DATA MONITOR (SPEC)" mode, and make sure that the each indication is within the SP value.

OK or NG

OK >> **INSPECTION END**
NG >> Detect malfunctioning part according to EC-88, "Symptom Matrix Chart".

30. CHECK “B/FUEL SCHDL”

Select “B/FUEL SCHDL” in “DATA MONITOR (SPEC)” mode, and then make sure that the indication is within the SP value.

OK or NG

OK >> **INSPECTION END**
NG >> Detect malfunctioning part according to EC-88, "Symptom Matrix Chart".

TROUBLE DIAGNOSIS FOR INTERMITTENT INCIDENT

Description

INFOID:0000000001702603

Intermittent incidents may occur. In many cases, the malfunction resolves itself (the part or circuit function returns to normal without intervention). It is important to realize that the symptoms described in the customer's complaint often do not recur on (1st trip) DTC visits. Realize also that the most frequent cause of Intermittent Incidents occurrences is poor electrical connections. Because of this, the conditions under which the incident occurred may not be clear. Therefore, circuit checks made as part of the standard diagnostic procedure may not indicate the specific malfunctioning area.

Common Intermittent Incidents Report Situations

STEP in Work Flow	Situation
2	The CONSULT-II is used. The SELF-DIAG RESULTS screen shows time data other than 0 or [1t].
3 or 4	The symptom described by the customer does not recur.
5	(1st trip) DTC does not appear during the DTC Confirmation Procedure.
10	The Diagnostic Procedure for PXXXX does not indicate the malfunctioning area.

Diagnosis Procedure

INFOID:0000000001702604

1. INSPECTION START

Erase (1st trip) DTCs.
Refer to EC-47, "Emission-related Diagnostic Information".

>> GO TO 2.

2. CHECK GROUND TERMINALS

Check ground terminals for corroding or loose connection.
Refer to EC-142, "Ground Inspection".

OK or NG

OK >> GO TO 3.
NG >> Repair or replace.

3. SEARCH FOR ELECTRICAL INCIDENT

Perform GI-25, "How to Perform Efficient Diagnosis for an Electrical Incident", “INCIDENT SIMULATION TESTS”.

OK or NG

OK >> GO TO 4.
NG >> Repair or replace.

4. CHECK CONNECTOR TERMINALS

Refer to GI-22, "How to Check Terminal", “HOW TO PROBE CONNECTORS”, “How to Check Enlarged Contact Spring of Terminal”.

OK or NG

OK >> **INSPECTION END**
NG >> Repair or replace connector.

POWER SUPPLY AND GROUND CIRCUIT

Wiring Diagram

INFOID:0000000001702605

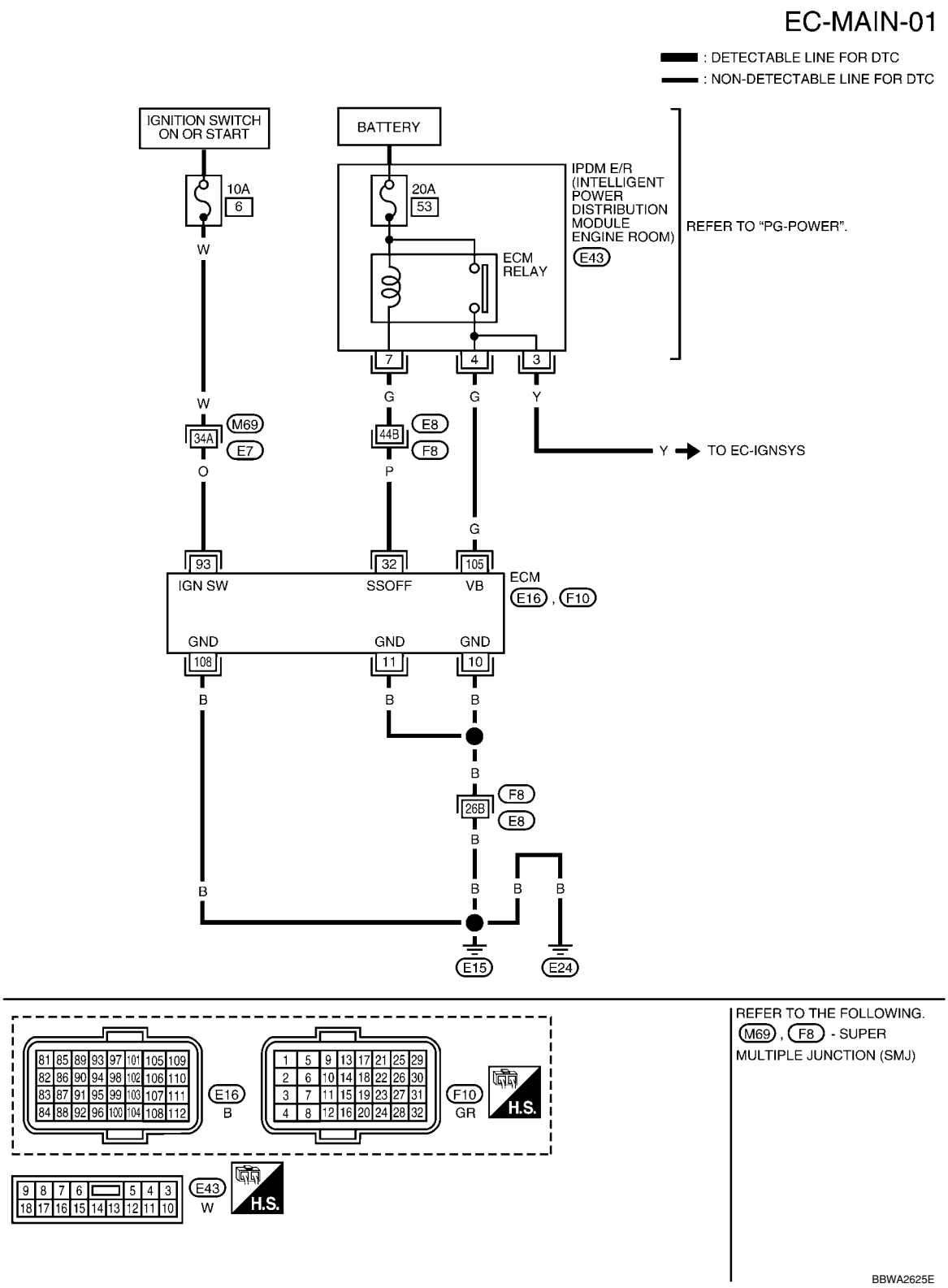

Specification data are reference values and are measured between each terminal and ground.

CAUTION:

Do not use ECM ground terminals when measuring input/output voltage. Doing so may result in damage to the ECM's transistor. Use a ground other than ECM terminals, such as the ground.

TERMINAL NO.	WIRE COLOR	ITEM	CONDITION	DATA (DC Voltage)
10 11	B B	ECM ground	**[Engine is running]** • Idle speed	Body ground
32	P	ECM relay (Self shut-off)	**[Engine is running]** **[Ignition switch: OFF]** • For a few seconds after turning ignition switch OFF	0 - 1.0V
			[Ignition switch: OFF] • More than a few seconds after turning ignition switch OFF	BATTERY VOLTAGE (11 - 14V)
93	O	Ignition switch	**[Ignition switch: OFF]**	0V
			[Ignition switch: ON]	BATTERY VOLTAGE (11 - 14V)
105	G	Power supply for ECM	**[Ignition switch: ON]**	BATTERY VOLTAGE (11 - 14V)
108	B	ECM ground	**[Engine is running]** • Idle speed	Body ground

Diagnosis Procedure

INFOID:0000000001702606

1. INSPECTION START

Start engine.
Is engine running?

Yes or No

Yes >> GO TO 8.
No >> GO TO 2.

2. CHECK ECM POWER SUPPLY CIRCUIT-I

1. Turn ignition switch OFF and then ON.
2. Check voltage between ECM terminal 93 and ground with CONSULT-II or tester.

Voltage: Battery voltage

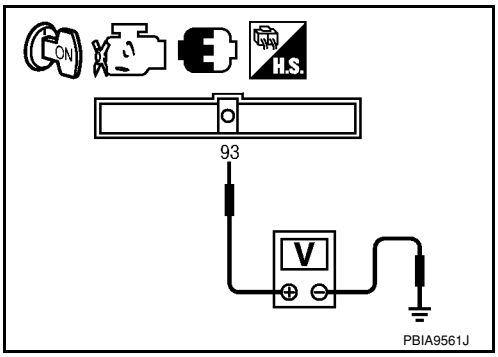

OK or NG

OK >> GO TO 4.
NG >> GO TO 3.

3. DETECT MALFUNCTIONING PART

Check the following.
- Harness connectors M69, E7
- 10A fuse
- Harness for open or short between ECM and fuse

>> Repair open circuit or short to ground or short to power in harness or connectors.

4. CHECK GROUND CONNECTIONS

1. Turn ignition switch OFF.
2. Loosen and retighten ground screw on the body.
   Refer to EC-142, "Ground Inspection".

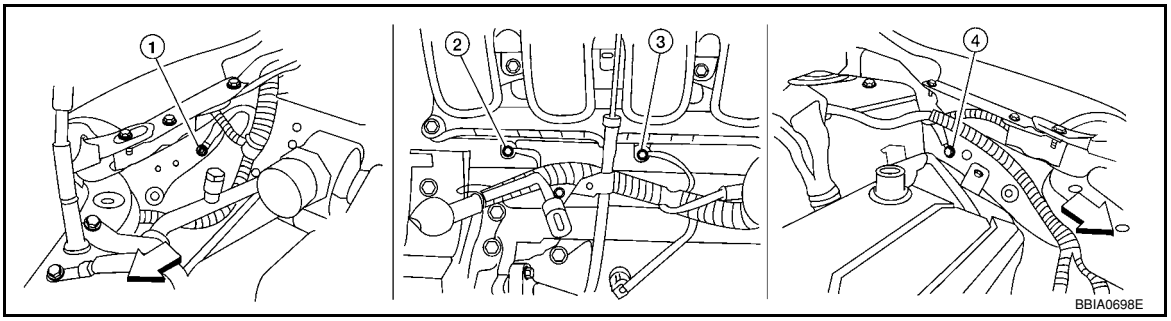

⇦ Vehicle front

1. Body ground E24
2. Engine ground F9
3. Engine ground F16
4. Body ground E15

OK or NG

OK >> GO TO 5.
NG >> Repair or replace ground connections.

5. CHECK ECM GROUND CIRCUIT FOR OPEN AND SHORT-I

1. Disconnect ECM harness connector.
2. Check harness continuity between ECM terminals 10, 11, 108 and ground.
   Refer to Wiring Diagram.

   Continuity should exist.

3. Also check harness for short to power.

OK or NG

OK >> GO TO 7.
NG >> GO TO 6.

6. DETECT MALFUNCTIONING PART

Check the following.
- Harness connectors F8, E8
- Harness for open or short between ECM and ground

>> Repair open circuit or short to power in harness or connectors.

7. CHECK ECM POWER SUPPLY CIRCUIT-II

1. Reconnect ECM harness connector.
2. Turn ignition switch ON.
3. Check voltage between IPDM E/R terminal 3 and ground with CONSULT-II or tester.

   Voltage: Battery voltage

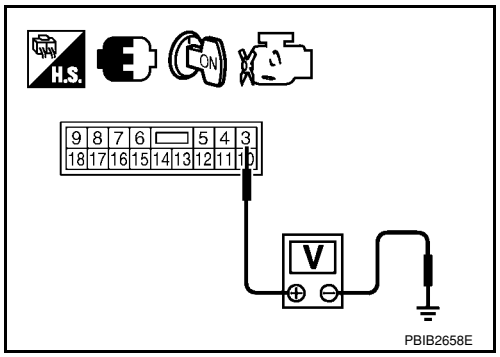

OK or NG

OK >> Go to EC-531.
NG >> GO TO 8.

8. CHECK ECM POWER SUPPLY CIRCUIT-III

1. Turn ignition switch OFF and wait at least 10 seconds.
2. Turn ignition switch ON and then OFF.

3. Check voltage between ECM terminal 105 and ground with CONSULT-II or tester.

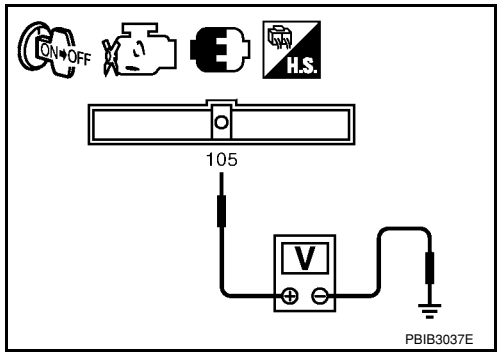

Voltage: After turning ignition switch OFF, battery voltage will exist for a few seconds, then drop approximately 0V.

OK or NG

OK >> GO TO 14.
NG (Battery voltage does not exist.)>>GO TO 9.
NG (Battery voltage exists for more than a few seconds.)>>GO TO 11.

9. CHECK ECM POWER SUPPLY CIRCUIT-IV

1. Turn ignition switch OFF and wait at least 10 seconds.
2. Check voltage between ECM terminal 32 and ground with CONSULT-II or tester.

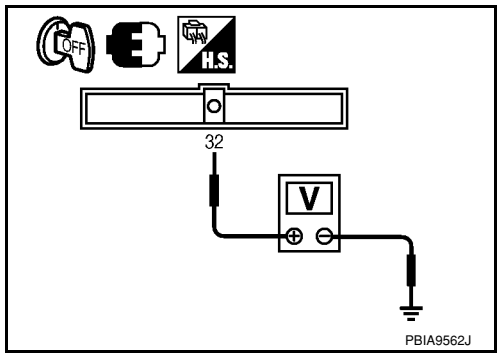

Voltage: Battery voltage

OK or NG

OK >> GO TO 10.
NG >> GO TO 11.

10. CHECK ECM POWER SUPPLY CIRCUIT-V

1. Disconnect ECM harness connector.
2. Disconnect IPDM E/R harness connector E43.
3. Check harness continuity between ECM terminal 105 and IPDM E/R terminal 4. Refer to Wiring Diagram.

Continuity should exist.

4. Also check harness for short to ground and short to power.

OK or NG

OK >> GO TO 17.
NG >> Repair open circuit or short to ground or short to power in harness or connectors.

11. CHECK ECM POWER SUPPLY CIRCUIT-VI

1. Disconnect ECM harness connector.
2. Disconnect IPDM E/R harness connector E43.
3. Check harness continuity between ECM terminal 32 and IPDM E/R terminal 7. Refer to Wiring Diagram.

Continuity should exist.

4. Also check harness for short to ground and short to power.

OK or NG

OK >> GO TO 13.
NG >> GO TO 12.

12. DETECT MALFUNCTIONING PART

Check the following.
- Harness connectors E8, F8
- Harness for open or short between ECM and IPDM E/R

>> Repair open circuit or short to ground or short to power in harness or connectors.

13. CHECK 20A FUSE

1. Disconnect 20A fuse from IPDM E/R.
2. Check 20A fuse.

OK or NG

OK >> GO TO 17.
NG >> Replace 20A fuse.

14. CHECK GROUND CONNECTIONS

1. Loosen and retighten ground screw on the body.
   Refer to EC-142, "Ground Inspection".

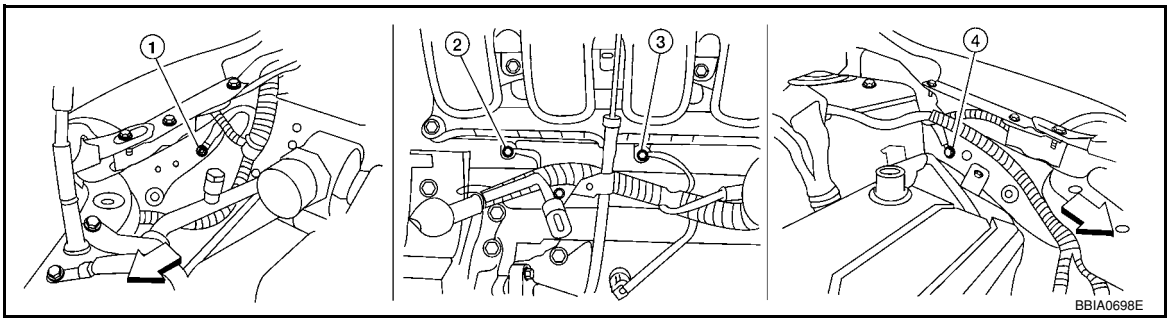

⇦: Vehicle front

1. Body ground E24
2. Engine ground F9
3. Engine ground F16
4. Body ground E15

OK or NG

OK >> GO TO 15.
NG >> Repair or replace ground connections.

15. CHECK ECM GROUND CIRCUIT FOR OPEN AND SHORT-II

1. Disconnect ECM harness connector.
2. Check harness continuity between ECM terminals 10, 11, 108 and ground.
   Refer to Wiring Diagram.

   Continuity should exist.

3. Also check harness for short to power.

OK or NG

OK >> GO TO 17.
NG >> GO TO 16.

16. DETECT MALFUNCTIONING PART

Check the following.
- Harness connectors F8, E8
- Harness for open or short between ECM and ground

>> Repair open circuit or short to power in harness or connectors.

17. CHECK INTERMITTENT INCIDENT

Refer to EC-136.

OK or NG

OK >> Replace IPDM E/R. Refer to PG-25, "IPDM E/R Power/Ground Circuit Inspection".
NG >> Repair open circuit or short to power in harness or connectors.

Ground Inspection

INFOID:0000000001702607

Ground connections are very important to the proper operation of electrical and electronic circuits. Ground connections are often exposed to moisture, dirt and other corrosive elements. The corrosion (rust) can become an unwanted resistance. This unwanted resistance can change the way a circuit works.
Electronically controlled circuits are very sensitive to proper grounding. A loose or corroded ground can drastically affect an electronically controlled circuit. A poor or corroded ground can easily affect the circuit. Even when the ground connection looks clean, there can be a thin film of rust on the surface.
When inspecting a ground connection follow these rules:

- Remove the ground bolt or screw.
- Inspect all mating surfaces for tarnish, dirt, rust, etc.
- Clean as required to assure good contact.
- Reinstall bolt or screw securely.
- Inspect for “add-on” accessories which may be interfering with the ground circuit.
- If several wires are crimped into one ground eyelet terminal, check for proper crimps. Make sure all of the wires are clean, securely fastened and providing a good ground path. If multiple wires are cased in one eyelet make sure no ground wires have excess wire insulation.

For detailed ground distribution information, refer to PG-28, "Ground Distribution".

Ground Inspection

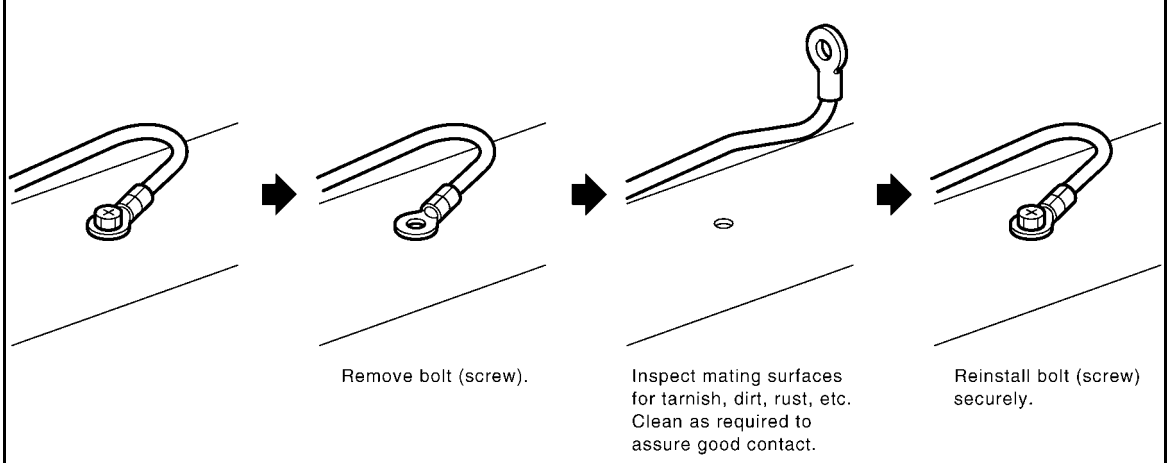

DTC U1000, U1001 CAN COMMUNICATION LINE

Description

INFOID:0000000001702608

CAN (Controller Area Network) is a serial communication line for real time application. It is an on-vehicle multiplex communication line with high data communication speed and excellent error detection ability. Many electronic control units are equipped onto a vehicle, and each control unit shares information and links with other control units during operation (not independent). In CAN communication, control units are connected with 2 communication lines (CAN H line, CAN L line) allowing a high rate of information transmission with less wiring. Each control unit transmits/receives data but selectively reads required data only.

On Board Diagnosis Logic

INFOID:0000000001702609

DTC No.	Trouble diagnosis name	DTC detecting condition	Possible cause
U1000*1 1000*1	CAN communication line	When ECM is not transmitting or receiving CAN communication signal of OBD (emission related diagnosis) for 2 seconds or more.	• Harness or connectors (CAN communication line is open or shorted.)
U1001*2 1001*2		When ECM is not transmitting or receiving CAN communication signal other than OBD (emission-related diagnosis) for 2 seconds or more.	

*1: **This self-diagnosis has the one trip detection logic (A/T, CVT).**
The MIL will not light up for this self-diagnosis (M/T).

*2: **The MIL will not light up for this self-diagnosis.**

DTC Confirmation Procedure

INFOID:0000000001702610

1. Turn ignition switch ON and wait at least 3 seconds.
2. Select “DATA MONITOR” mode with CONSULT-II.
3. If 1st trip DTC is detected, go to EC-144, "Diagnosis Procedure".

Wiring Diagram

INFOID:0000000001702611

EC-CAN-01

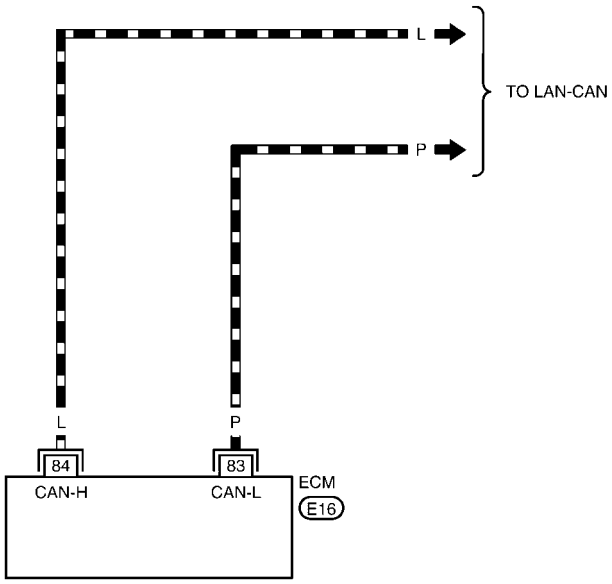

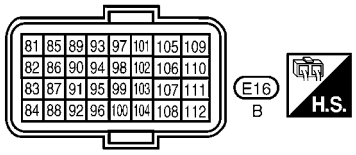

BBWA2626E

Diagnosis Procedure

INFOID:0000000001702612

Go to LAN-23, "CAN System Specification Chart".

DTC U1010 CAN COMMUNICATION

Description

INFOID:0000000001702613

CAN (Controller Area Network) is a serial communication line for real time application. It is an on-vehicle multiplex communication line with high data communication speed and excellent error detection ability. Many electronic control units are equipped onto a vehicle, and each control unit shares information and links with other control units during operation (not independent). In CAN communication, control units are connected with 2 communication lines (CAN H line, CAN L line) allowing a high rate of information transmission with less wiring. Each control unit transmits/receives data but selectively reads required data only.

On Board Diagnosis Logic

INFOID:0000000001702614

This self-diagnosis has the one trip detection logic (A/T, CVT).
The MIL will not light up for this self-diagnosis (M/T).

DTC No.	Trouble diagnosis name	DTC detecting condition	Possible cause
U1010 1010	CAN communication bus	When detecting error during the initial diagnosis for CAN controller of each control unit.	• ECM

DTC Confirmation Procedure

INFOID:0000000001702615

WITH CONSULT-II

1. Turn ignition switch ON.
2. Select “DATA MONITOR” mode with CONSULT-II.
3. If 1st trip DTC is detected, go to EC-145, "Diagnosis Procedure".

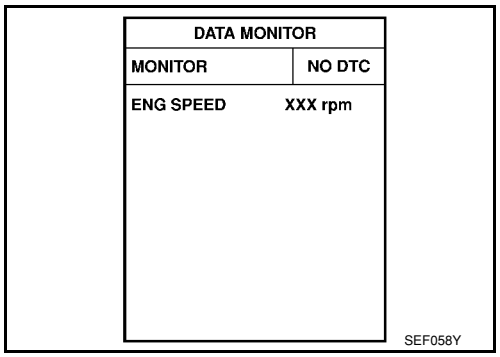

WITH GST

Follow the procedure “WITH CONSULT-II” above.

Diagnosis Procedure

INFOID:0000000001702616

1. INSPECTION START

With CONSULT-II

1. Turn ignition switch ON.
2. Select “SELF-DIAG RESULTS” mode with CONSULT-II.
3. Touch “ERASE”.
4. **Perform DTC Confirmation Procedure.**
   See EC-145, "DTC Confirmation Procedure".
5. Is the 1st trip DTC U1010 displayed again?

With GST

1. Turn ignition switch ON.
2. Select Service $04 with GST.
3. **Perform DTC Confirmation Procedure.**
   See EC-145, "DTC Confirmation Procedure".
4. Is the 1st trip DTC U1010 displayed again?

Yes or No

Yes >> GO TO 2.
No >> **INSPECTION END**

2. REPLACE ECM

1. Replace ECM.
2. Perform initialization of NVIS (NATS) system and registration of all NVIS (NATS) ignition key IDs.
   Refer to BL-211, "ECM Re-communicating Function".
3. Perform EC-75, "VIN Registration".
4. Perform EC-76, "Accelerator Pedal Released Position Learning".
5. Perform EC-76, "Throttle Valve Closed Position Learning".
6. Perform EC-76, "Idle Air Volume Learning".

>> **INSPECTION END**

DTC P0011 IVT CONTROL

Description

INFOID:0000000001702617

SYSTEM DESCRIPTION

Sensor	Input signal to ECM	ECM function	Actuator
Crankshaft position sensor (POS) Camshaft position sensor (PHASE)	Engine speed and piston position	Intake valve timing control	Intake valve timing control solenoid valve
Engine coolant temperature sensor	Engine coolant temperature		
Wheel sensor	Vehicle speed*		

*: This signal is sent to the ECM through CAN communication line.

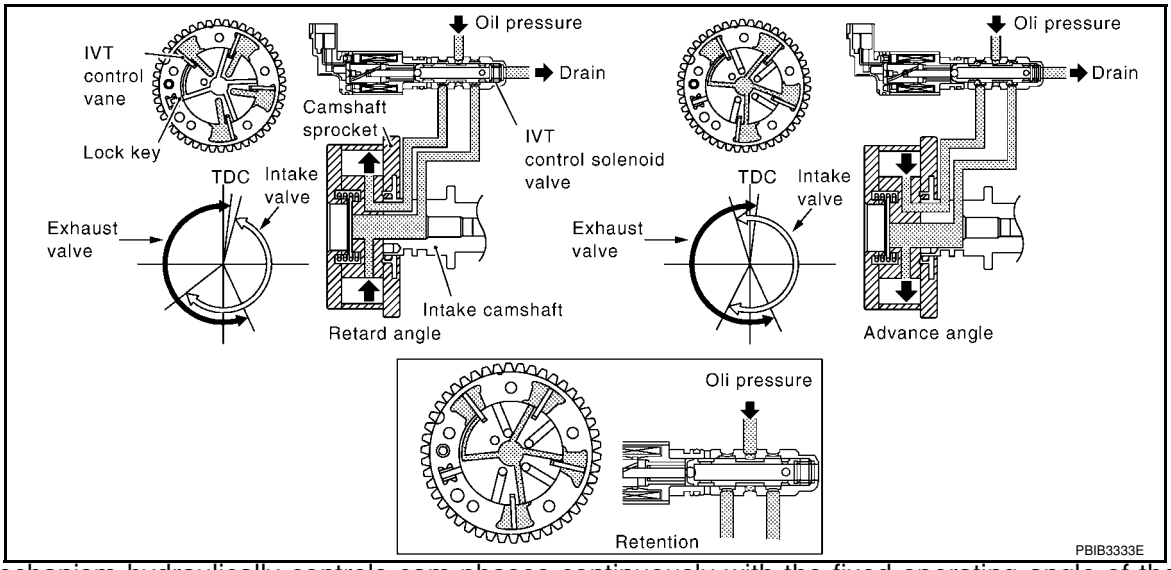

This mechanism hydraulically controls cam phases continuously with the fixed operating angle of the intake valve. The ECM receives signals such as crankshaft position, camshaft position, engine speed, and engine coolant temperature. Then, the ECM sends ON/OFF pulse duty signals to the intake valve timing control solenoid valve depending on driving status. This makes it possible to control the shut/open timing of the intake valve to increase engine torque in low/mid speed range and output in high-speed range.

CONSULT-II Reference Value in Data Monitor Mode

INFOID:0000000001702618

Specification data are reference values.

MONITOR ITEM	CONDITION		SPECIFICATION
INT/V TIM (B1)	• Engine: After warming up • Air conditioner switch: OFF • Shift lever: P or N (A/T, CVT), Neutral (M/T) • No load	Idle	–5° - 5°CA
		When revving engine up to 2,000 rpm quickly	Approx. 0° - 40°CA
INT/V SOL (B1)	• Engine: After warming up • Air conditioner switch: OFF • Shift lever: P or N (A/T, CVT), Neutral (M/T) • No load	Idle	0% - 2%
		When revving engine up to 2,000 rpm quickly	Approx. 0% - 90%

On Board Diagnosis Logic

INFOID:0000000001702619

DTC No.	Trouble diagnosis name	Detecting condition	Possible cause
P0011 0011	Intake valve timing control performance	There is a gap between angle of target and phase-control angle degree.	• Crankshaft position sensor (POS) • Camshaft position sensor (PHASE) • Intake valve timing control solenoid valve • Accumulation of debris to the signal pick-up portion of the camshaft • Timing chain installation • Foreign matter caught in the oil groove for intake valve timing control

FAIL-SAFE MODE

ECM enters in fail-safe mode when the malfunction is detected.

Detected items	Engine operating condition in fail-safe mode
Intake valve timing control	The signal is not energized to the solenoid valve and the valve control does not function

DTC Confirmation Procedure

INFOID:0000000001702620

CAUTION:
Always drive at a safe speed.
NOTE:
- **If DTC P0011 is displayed with DTC P0075, first perform trouble diagnosis for DTC P0075. See EC-162.**
- If DTC Confirmation Procedure has been previously conducted, always turn ignition switch OFF and wait at least 10 seconds before conducting the next test.

TESTING CONDITION:
Before performing the following procedure, confirm that battery voltage is between 10V and 16V at idle.

WITH CONSULT-II

1. Turn ignition switch ON and select “DATA MONITOR” mode with CONSULT-II.
2. Start engine and warm it up to the normal operating temperature.
3. Maintain the following conditions for at least 6 consecutive seconds.
   Hold the accelerator pedal as steady as possible.

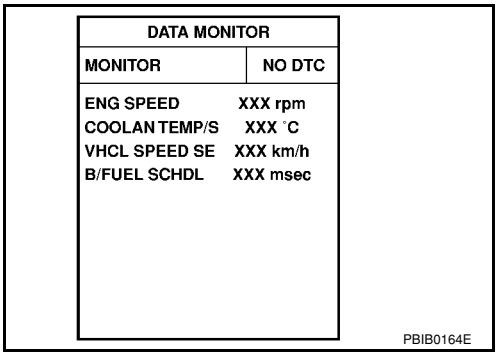

ENG SPEED	2,000 rpm (A constant rotation is maintained.)
COOLAN TEMP/S	More than 60°C (140°F)
B/FUEL SCHDL	More than 3.87 msec
Shift lever	P or N position (A/T, CVT) Neutral position (M/T)

4. Let engine idle for 10 seconds.
5. If 1st trip DTC is detected, go to EC-149, "Diagnosis Procedure".
   If 1st trip DTC is not detected, go to next step.
6. Maintain the following conditions for at least 20 consecutive seconds.

ENG SPEED	1,200 - 3,175 rpm (A constant rotation is maintained.)
COOLAN TEMP/S	70 - 105°C (158 - 221°F)

Shift lever	1st or 2nd position
Driving location uphill	Driving vehicle uphill (Increased engine load will help maintain the driving conditions required for this test.)

7. If 1st trip DTC is detected, go to EC-149, "Diagnosis Procedure".

WITH GST

Follow the procedure “WITH CONSULT-II” above.

Diagnosis Procedure

INFOID:0000000001702621

1. CHECK OIL PRESSURE WARNING LAMP

1. Start engine.
2. Check oil pressure warning lamp and confirm it is not illuminated.

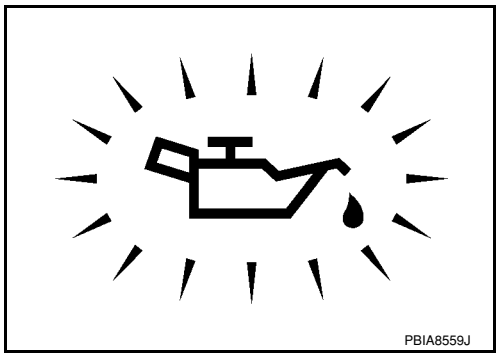

OK or NG

OK >> GO TO 2.
NG >> Go to LU-6, "Inspection".

2. CHECK INTAKE VALVE TIMING CONTROL SOLENOID VALVE

Refer to EC-150, "Component Inspection".

OK or NG

OK >> GO TO 3.
NG >> Replace intake valve timing control solenoid valve.

3. CHECK CRANKSHAFT POSITION SENSOR (POS)

Refer to EC-301, "Component Inspection".

OK or NG

OK >> GO TO 4.
NG >> Replace crankshaft position sensor (POS).

4. CHECK CAMSHAFT POSITION SENSOR (PHASE)

Refer to EC-307, "Component Inspection".

OK or NG

OK >> GO TO 5.
NG >> Replace camshaft position sensor (PHASE).

5. CHECK CAMSHAFT (INTAKE)

Check the following.
- Accumulation of debris to the signal plate of camshaft (1) rear end
- Chipping signal plate of camshaft rear end

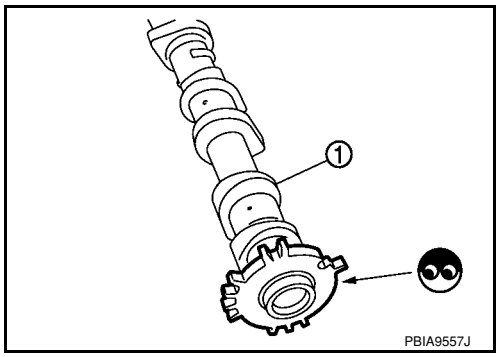

OK or NG

OK >> GO TO 6.
NG >> Remove debris and clean the signal plate of camshaft rear end or replace camshaft.

6. CHECK TIMING CHAIN INSTALLATION

Check service records for any recent repairs that may cause timing chain misaligned.

Are there any service records that may cause timing chain misaligned?

Yes or No

Yes >> Check timing chain installation. Refer to EM-37.
No >> GO TO 7.

7. CHECK LUBRICATION CIRCUIT

Refer to EM-47, "Removal and Installation".

OK or NG

OK >> GO TO 8.
NG >> Clean lubrication line.

8. CHECK INTERMITTENT INCIDENT

Refer to EC-136.
For Wiring Diagram, refer to EC-297, "Wiring Diagram" for CKP sensor (POS) and EC-304, "Wiring Diagram" for CMP sensor (PHASE).

>> **INSPECTION END**

Component Inspection

INFOID:0000000001702622

INTAKE VALVE TIMING CONTROL SOLENOID VALVE

1. Disconnect intake valve timing control solenoid valve harness connector.
2. Check resistance between intake valve timing control solenoid valve as follows.

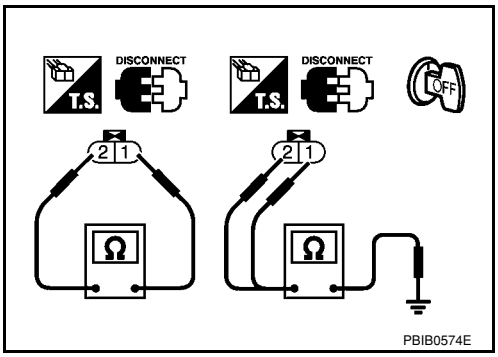

Terminal	Resistance
1 and 2	6.7 - 7.7Ω [at 20°C (68°F)]
1 or 2 and ground	∞Ω (Continuity should not exist.)

If NG, replace intake valve timing control solenoid valve.
If OK, go to next step.

3. Remove intake valve timing control solenoid valve.
4. Provide 12V DC between intake valve timing control solenoid valve terminals and then interrupt it. Make sure that the plunger moves as shown in the figure.
   CAUTION:
   Do not apply 12V DC continuously for 5 seconds or more. Doing so may result in damage to the coil in intake valve timing control solenoid valve.
   If NG, replace intake valve timing control solenoid valve.
   NOTE:
   Always replace O-ring when intake valve timing control solenoid valve is removed.

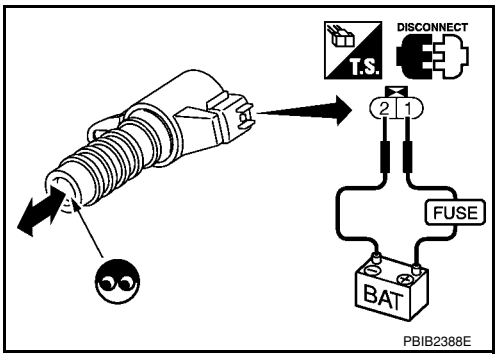

Removal and Installation

INFOID:0000000001702623

INTAKE VALVE TIMING CONTROL SOLENOID VALVE

Refer to EM-47.

DTC P0031, P0032 A/F SENSOR 1 HEATER

Description

INFOID:0000000001702624

SYSTEM DESCRIPTION

Sensor	Input Signal to ECM	ECM function	Actuator
Camshaft position sensor (PHASE) Crankshaft position sensor (POS)	Engine speed	Air fuel ratio (A/F) sensor 1 heater control	Air fuel ratio (A/F) sensor 1 heater
Mass air flow sensor	Amount of intake air		

The ECM performs ON/OFF duty control of the A/F sensor 1 heater corresponding to the engine operating condition to keep the temperature of A/F sensor 1 element at the specified range.

CONSULT-II Reference Value in Data Monitor Mode

INFOID:0000000001702625

Specification data are reference values.

MONITOR ITEM	CONDITION	SPECIFICATION
A/F S1 HTR (B1)	• Engine: After warming up, idle the engine (More than 140 seconds after starting engine.)	4 - 100%

On Board Diagnosis Logic

INFOID:0000000001702626

DTC No.	Trouble diagnosis name	DTC detecting condition	Possible cause
P0031 0031	Air fuel ratio (A/F) sensor 1 heater control circuit low	The current amperage in the air fuel ratio (A/F) sensor 1 heater circuit is out of the normal range. [An excessively low voltage signal is sent to ECM through the air fuel ratio (A/F) sensor 1 heater.]	• Harness or connectors [Air fuel ratio (A/F) sensor 1 heater circuit is open or shorted.] • Air fuel ratio (A/F) sensor 1 heater
P0032 0032	Air fuel ratio (A/F) sensor 1 heater control circuit high	The current amperage in the air fuel ratio (A/F) sensor 1 heater circuit is out of the normal range. [An excessively high voltage signal is sent to ECM through the air fuel ratio (A/F) sensor 1 heater.]	• Harness or connectors [Air fuel ratio (A/F) sensor 1 heater circuit is shorted.] • Air fuel ratio (A/F) sensor 1 heater

DTC Confirmation Procedure

INFOID:0000000001702627

NOTE:
If DTC Confirmation Procedure has been previously conducted, always turn ignition switch OFF and wait at least 10 seconds before conducting the next test.
TESTING CONDITION:
Before performing the following procedure, confirm that battery voltage is between 10.5V and 16V at idle.
With CONSULT-II

WITH CONSULT-II

1. Turn ignition switch ON and select “DATA MONITOR” mode with CONSULT-II.
2. Start engine and run it for at least 10 seconds at idle speed.
3. If 1st trip DTC is detected, go to EC-153, "Diagnosis Procedure".

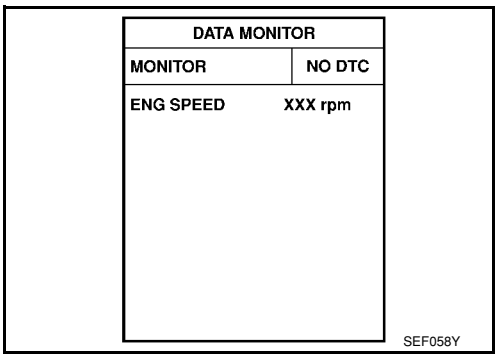

WITH GST

Follow the procedure “WITH CONSULT-II” above.

Wiring Diagram

INFOID:0000000001702628

EC-A/FH-01

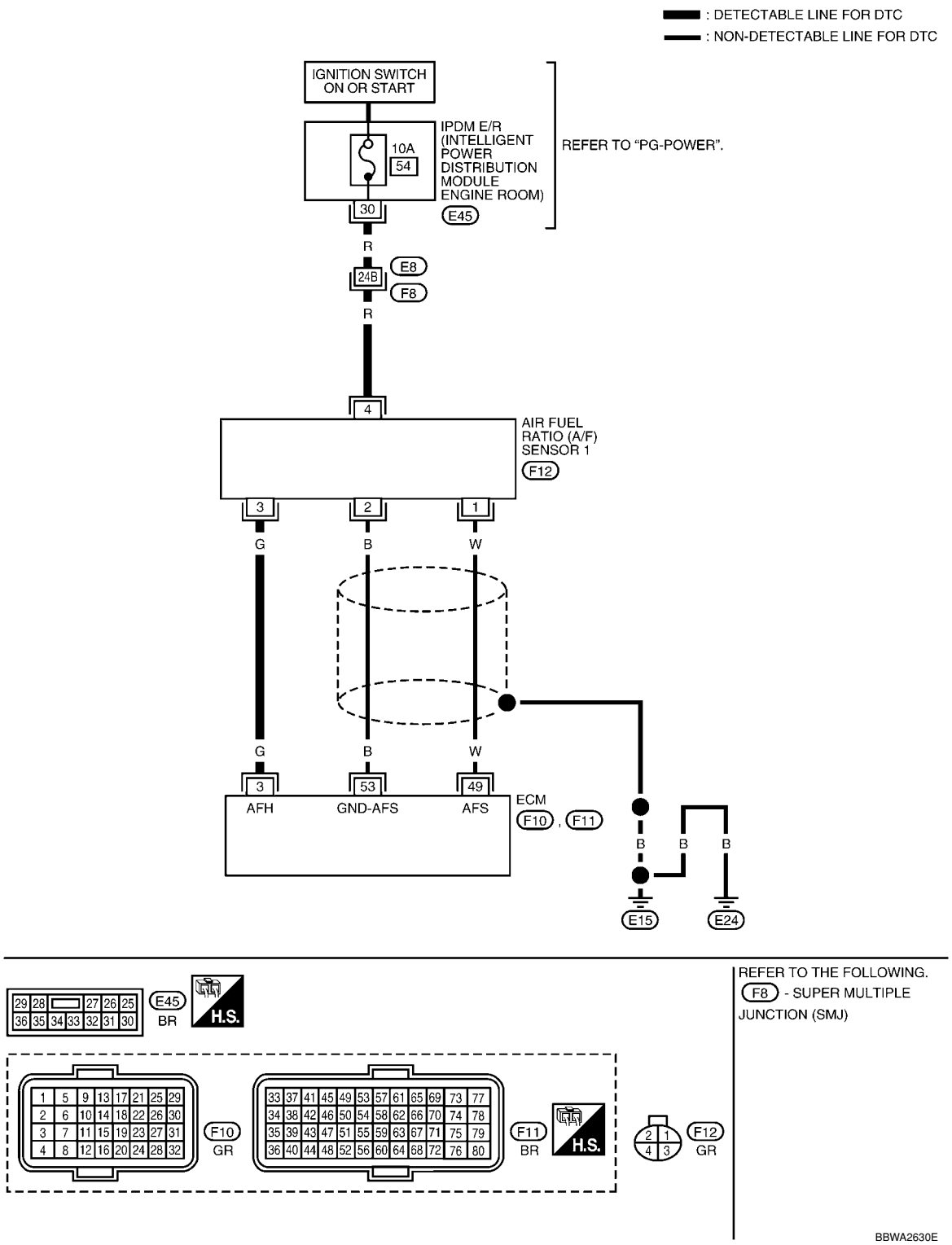

Specification data are reference values and are measured between each terminal and ground.

Pulse signal is measured by CONSULT-II.

CAUTION:

Do not use ECM ground terminals when measuring input/output voltage. Doing so may result in damage to the ECM's transistor. Use a ground other than ECM terminals, such as the ground.

TERMINAL NO.	WIRE COLOR	ITEM	CONDITION	DATA (DC Voltage)
3	G	A/F sensor 1 heater	**[Engine is running]** • **Warm-up condition** • Idle speed (More than 140 seconds after starting engine)	Approximately 2.9 - 8.8V★ 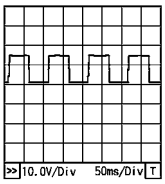 PBIA8148J
49	W	A/F sensor 1	**[Engine is running]** • **Warm-up condition** • Engine speed: 2,000 rpm	Approximately 1.8V Output voltage varies with air fuel ratio.
53	B	A/F sensor 1	**[Ignition switch: ON]**	Approximately 2.2V

★: Average voltage for pulse signal (Actual pulse signal can be confirmed by oscilloscope.)

Diagnosis Procedure

INFOID:0000000001702629

1. CHECK GROUND CONNECTIONS

1. Turn ignition switch OFF.
2. Loosen and retighten ground screw on the body.
   Refer to EC-142, "Ground Inspection".

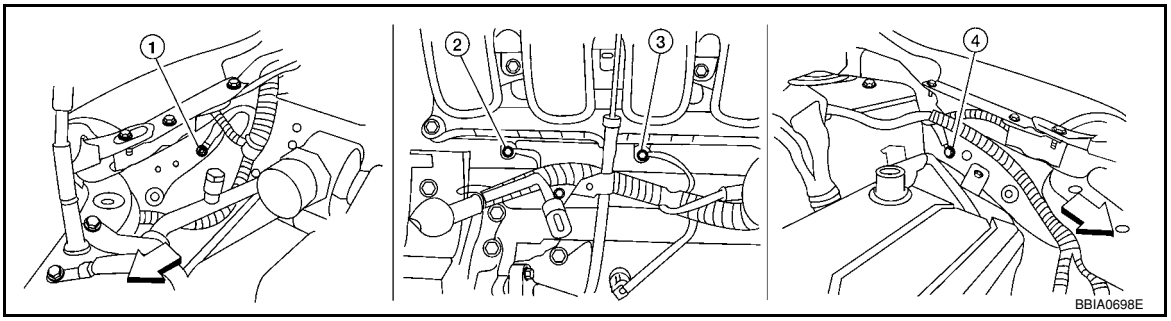

⇦: Vehicle front

1. Body ground E24
2. Engine ground F9
3. Engine ground F16
4. Body ground E15

OK or NG

OK >> GO TO 2.
NG >> Repair or replace ground connections.

2. CHECK AIR FUEL RATIO (A/F) SENSOR 1 POWER SUPPLY CIRCUIT

1. Disconnect air fuel ratio (A/F) sensor 1 harness connector (1).
2. Turn ignition switch ON.
- Air fuel ratio (A/F) sensor 1 (2)

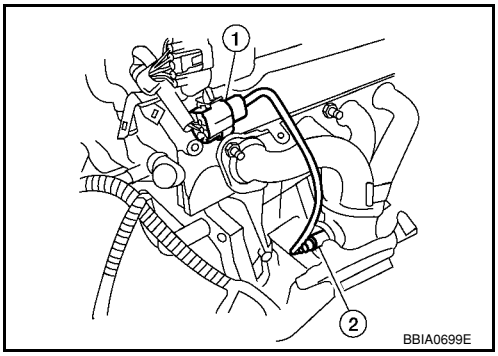

3. Check voltage between A/F sensor 1 terminal 4 and ground with CONSULT-II or tester.

Voltage: Battery voltage

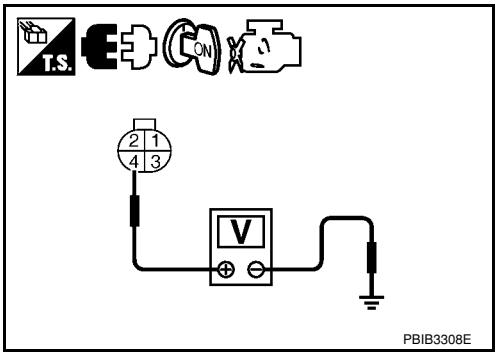

OK or NG

OK >> GO TO 4.
NG >> GO TO 3.

3. DETECT MALFUNCTIONING PART

Check the following.
- Harness connectors E8, F8
- Harness for open or short between A/F sensor 1 and fuse

>> Repair or replace harness or connectors.

4. CHECK A/F SENSOR 1 HEATER OUTPUT SIGNAL CIRCUIT

1. Turn ignition switch OFF.
2. Disconnect ECM harness connector.
3. Check harness continuity between ECM terminal 3 and A/F sensor 1 terminal 3. Refer to Wiring Diagram.

Continuity should exist.

4. Also check harness for short to ground and short to power.

OK or NG

OK >> GO TO 5.
NG >> Repair open circuit or short to ground or short to power in harness or connectors.

5. CHECK A/F SENSOR 1 HEATER

Refer to EC-154, "Component Inspection".

OK or NG

OK >> GO TO 6.
NG >> Replace air fuel ratio (A/F) sensor 1.

6. CHECK INTERMITTENT INCIDENT

Perform EC-136.

>> **INSPECTION END**

Component Inspection

INFOID:0000000001702630

AIR FUEL RATIO (A/F) SENSOR 1 HEATER

1. Check resistance between A/F sensor 1 terminals as follows.

Terminal No.	Resistance
3 and 4	1.8 - 2.44 Ω [at 25°C (77°F)]
3 and 1, 2	∞ Ω (Continuity should not exist)
4 and 1, 2	

2. If NG, replace air fuel ratio (A/F) sensor 1.

CAUTION:

- **Discard any A/F sensor which has been dropped from a height of more than 0.5 m (19.7 in) onto a hard surface such as a concrete floor; use a new one.**
- **Before installing new A/F sensor, clean exhaust system threads using Heated Oxygen Sensor Thread Cleaner tool J-43897-18 or J-43897-12 and approved anti-seize lubricant.**

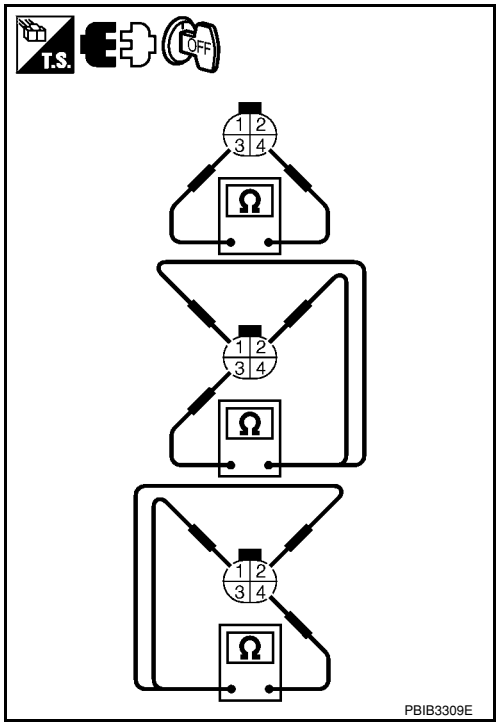

INFOID:0000000001702631

Removal and Installation

AIR FUEL RATIO SENSOR HEATER

Refer to EM-21.

DTC P0037, P0038 HO2S2 HEATER

Description

INFOID:0000000001702632

SYSTEM DESCRIPTION

Sensor	Input Signal to ECM	ECM Function	Actuator
Camshaft position sensor (PHASE)	Engine speed	Heated oxygen sensor 2 heater control	Heated oxygen sensor 2 heater
Crankshaft position sensor (POS)			
Engine coolant temperature sensor	Engine coolant temperature		
Mass air flow sensor	Amount of intake air		

The ECM performs ON/OFF control of the heated oxygen sensor 2 heater corresponding to the engine speed, amount of intake air and engine coolant temperature.

OPERATION

Engine speed rpm	Heated oxygen sensor 2 heater
Above 3,600	OFF
• Below 3,600 rpm after the following conditions are met. - Engine: After warming up - Keeping the engine speed between 3,500 and 4,000 rpm for 1 minute and at idle for 1 minute under no load	ON

CONSULT-II Reference Value in Data Monitor Mode

INFOID:0000000001702633

Specification data are reference values.

MONITOR ITEM	CONDITION	SPECIFICATION
HO2S2 HTR (B1)	• Engine speed: Below 3,600 rpm after the following conditions are met - Engine: After warming up - Keeping the engine speed between 3,500 and 4,000 rpm for 1 minute and at idle for 1 minute under no load.	ON
	• Engine speed: Above 3,600 rpm	OFF

On Board Diagnosis Logic

INFOID:0000000001702634

DTC No.	Trouble diagnosis name	DTC detecting condition	Possible cause
P0037 0037	Heated oxygen sensor 2 heater control circuit low	The current amperage in the heated oxygen sensor 2 heater circuit is out of the normal range. (An excessively low voltage signal is sent to ECM through the heated oxygen sensor 2 heater.)	• Harness or connectors (Heated oxygen sensor 2 heater circuit is open or shorted.) • Heated oxygen sensor 2 heater
P0038 0038	Heated oxygen sensor 2 heater control circuit high	The current amperage in the heated oxygen sensor 2 heater circuit is out of the normal range. (An excessively high voltage signal is sent to ECM through the heated oxygen sensor 2 heater.)	• Harness or connectors (Heated oxygen sensor 2 heater circuit is shorted.) • Heated oxygen sensor 2 heater

DTC Confirmation Procedure

INFOID:0000000001702635

NOTE:
If DTC Confirmation Procedure has been previously conducted, always turn ignition switch OFF and wait at least 10 seconds before conducting the next test.
TESTING CONDITION:
Before performing the following procedure, confirm that battery voltage is between 10.5V and 16V at idle.

WITH CONSULT-II

1. Turn ignition switch ON and select “DATA MONITOR” mode with CONSULT-II.
2. Start engine and warm it up to the normal operating temperature.
3. Turn ignition switch OFF and wait at least 10 seconds.
4. Start engine and keep the engine speed between 3,500 and 4,000 rpm for at least 1 minute under no load.
5. Let engine idle for 1 minute.
6. If 1st trip DTC is detected, go to EC-159, "Diagnosis Procedure".

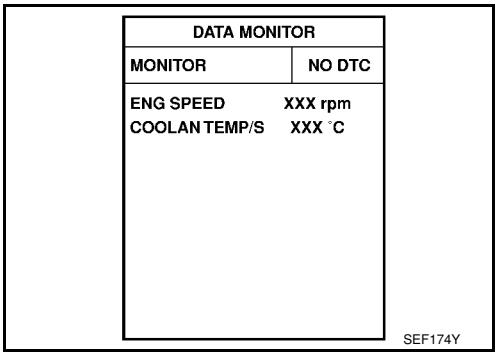

WITH GST

Follow the procedure “WITH CONSULT-II” above.

Wiring Diagram

INFOID:0000000001702636

EC-HO2S2H-01

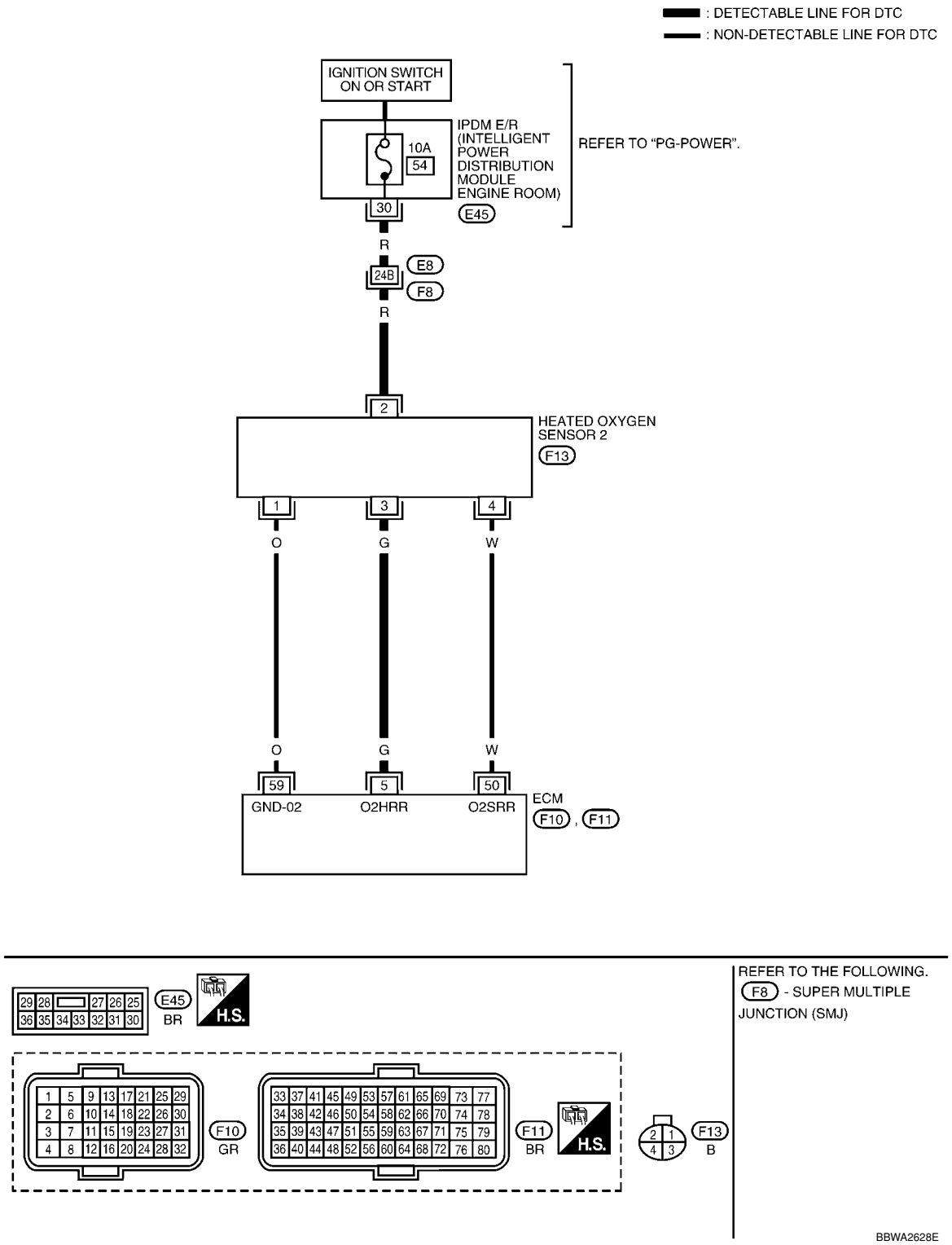

Specification data are reference values and are measured between each terminal and ground.
Pulse signal is measured by CONSULT-II.

CAUTION:

Do not use ECM ground terminals when measuring input/output voltage. Doing so may result in damage to the ECM's transistor. Use a ground other than ECM terminals, such as the ground.

TERMINAL NO.	WIRE COLOR	ITEM	CONDITION	DATA (DC Voltage)
5	G	Heated oxygen sensor 2 heater	**[Engine is running]** • Engine speed: Below 3,600 rpm after the following conditions are met. - Engine: After warming up - Keeping the engine speed between 3,500 and 4,000 rpm for 1 minute and at idle for 1 minute under no load.	Approximately 10V★ 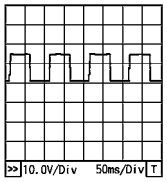 PBIA8148J
			[Ignition switch: ON] • Engine stopped **[Engine is running]** • Engine speed: Above 3,600 rpm.	BATTERY VOLTAGE (11 - 14V)
50	W	Heated oxygen sensor 2	**[Engine is running]** • Revving engine from idle to 3,000 rpm quickly after the following conditions are met. - Engine: After warming up - Keeping the engine speed between 3,500 and 4,000 rpm for 1 minute and at idle for 1 minute under no load.	0 - Approximately 1.0V
59	O	Sensor ground (Heated oxygen sensor 2)	**[Engine is running]** • **Warm-up condition** • Idle speed	Approximately 0V

★: Average voltage for pulse signal (Actual pulse signal can be confirmed by oscilloscope.)

Diagnosis Procedure

INFOID:0000000001702637

1. CHECK GROUND CONNECTIONS

1. Turn ignition switch OFF.
2. Loosen and retighten ground screw on the body.
   Refer to EC-142, "Ground Inspection".

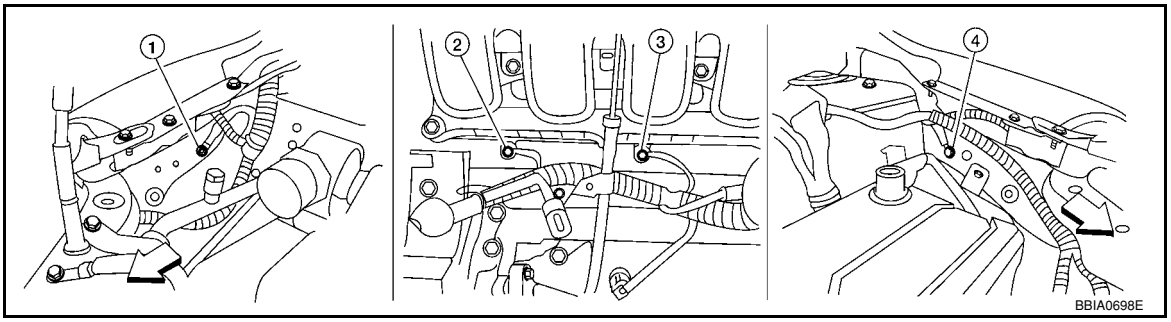

⇦: Vehicle front

1. Body ground E24
2. Engine ground F9
3. Engine ground F16
4. Body ground E15

OK or NG

OK >> GO TO 2.
NG >> Repair or replace ground connections.

2. CHECK HO2S2 POWER SUPPLY CIRCUIT

1. Disconnect heated oxygen sensor 2 harness connector (2).
- ⇦: Vehicle front
- Heated oxygen sensor 2 (1)
2. Turn ignition switch ON.

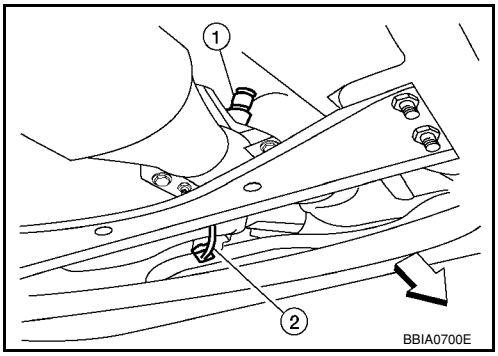

3. Check voltage between HO2S2 terminal 2 and ground with CONSULT-II or tester.

Voltage: Battery voltage

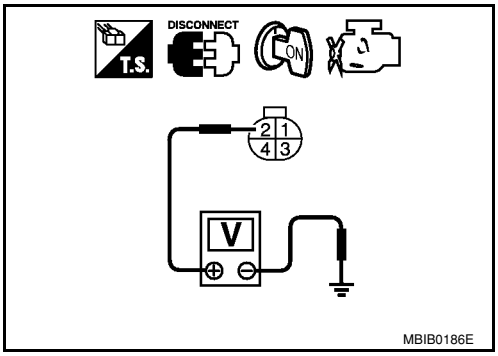

OK or NG

OK >> GO TO 4.
NG >> GO TO 3.

3. DETECT MALFUNCTIONING PART

Check the following.
- Harness connectors E8, F8
- Harness for open or short between heated oxygen sensor 2 and fuse

>> Repair open circuit or short to ground or short to power in harness or connectors.

4. CHECK HO2S2 OUTPUT SIGNAL CIRCUIT FOR OPEN AND SHORT

1. Turn ignition switch OFF.
2. Disconnect ECM harness connector.
3. Check harness continuity between ECM terminal 5 and HO2S2 terminal 3.
   Refer to Wiring Diagram.

Continuity should exist.

4. Also check harness for short to ground and short to power.

OK or NG

OK >> GO TO 5.
NG >> Repair open circuit or short to ground or short to power in harness or connectors.

5. CHECK HEATED OXYGEN SENSOR 2 HEATER

Refer to EC-160, "Component Inspection".

OK or NG

OK >> GO TO 6.
NG >> Replace heated oxygen sensor 2.

6. CHECK INTERMITTENT INCIDENT

Refer to EC-136.

>> **INSPECTION END**

Component Inspection

INFOID:0000000001702638

HEATED OXYGEN SENSOR 2 HEATER

1. Check resistance between HO2S2 terminals as follows.

Terminal No.	Resistance
2 and 3	3.4 - 4.4 Ω [at 25°C (77°F)]
1 and 2, 3, 4	∞ Ω (Continuity should not exist)
4 and 1, 2, 3	

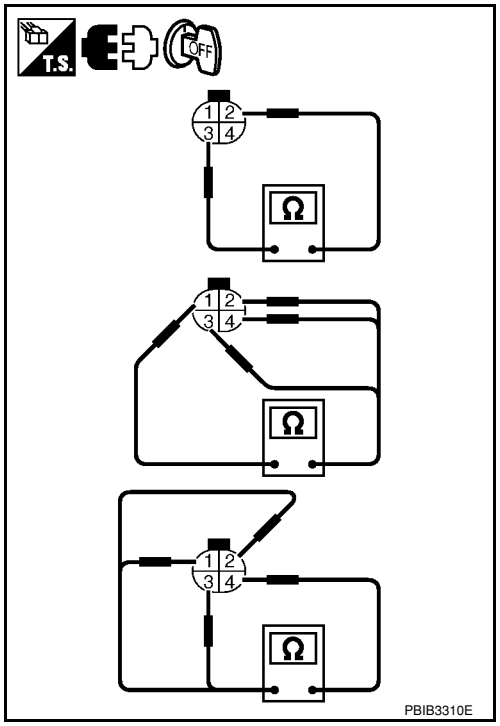

2. If NG, replace heated oxygen sensor 2.

CAUTION:

- **Discard any heated oxygen sensor which has been dropped from a height of more than 0.5 m (19.7 in) onto a hard surface such as a concrete floor; use a new one.**
- **Before installing new oxygen sensor, clean exhaust system threads using Oxygen Sensor Thread Cleaner tool J-43897-18 or J-43897-12 and approved anti-seize lubricant.**

Removal and Installation

INFOID:0000000001702639

HEATED OXYGEN SENSOR 2

Refer to EM-21.

DTC P0075 IVT CONTROL SOLENOID VALVE

Component Description

INFOID:0000000001702640

Intake valve timing control solenoid valve is activated by ON/OFF pulse duty (ratio) signals from the ECM.
The intake valve timing control solenoid valve changes the oil amount and direction of flow through intake valve timing control unit or stops oil flow.
The longer pulse width advances valve angle.
The shorter pulse width retards valve angle.
When ON and OFF pulse widths become equal, the solenoid valve stops oil pressure flow to fix the intake valve angle at the control position.

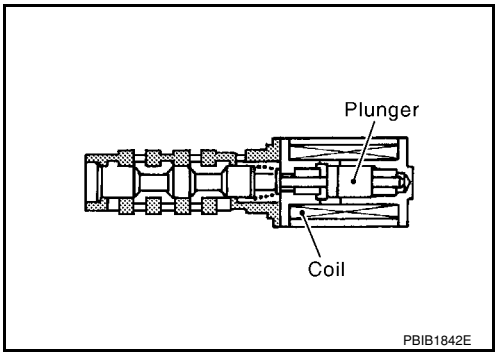

CONSULT-II Reference Value in Data Monitor Mode

INFOID:0000000001702641

Specification data are reference values.

MONITOR ITEM	CONDITION		SPECIFICATION
INT/V SOL (B1)	• Engine: After warming up • Air conditioner switch: OFF • Shift lever: P or N (A/T, CVT), Neutral (M/T) • No load	Idle	0% - 2%
		When revving engine up to 2,000 rpm quickly	Approx. 0% - 90%

On Board Diagnosis Logic

INFOID:0000000001702642

DTC No.	Trouble diagnosis name	DTC detecting condition	Possible cause
P0075 0075	Intake valve timing control solenoid valve circuit	An improper voltage is sent to the ECM through intake valve timing control solenoid valve.	• Harness or connectors (Intake valve timing control solenoid valve circuit is open or shorted.) • Intake valve timing control solenoid valve

DTC Confirmation Procedure

INFOID:0000000001702643

NOTE:
If DTC Confirmation Procedure has been previously conducted, always turn ignition switch OFF and wait at least 10 seconds before conducting the next test.

WITH CONSULT-II

1. Turn ignition switch ON.
2. Select “DATA MONITOR” mode with CONSULT-II.
3. Start engine and let it idle for 5 seconds.
4. If 1st trip DTC is detected, go to EC-164, "Diagnosis Procedure".

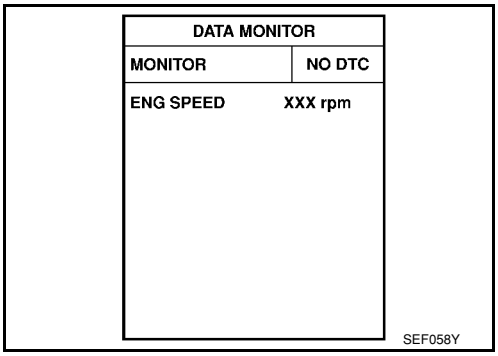

WITH GST

Following the procedure “WITH CONSULT-II” above.

Wiring Diagram

INFOID:0000000001702644

EC-IVC-01

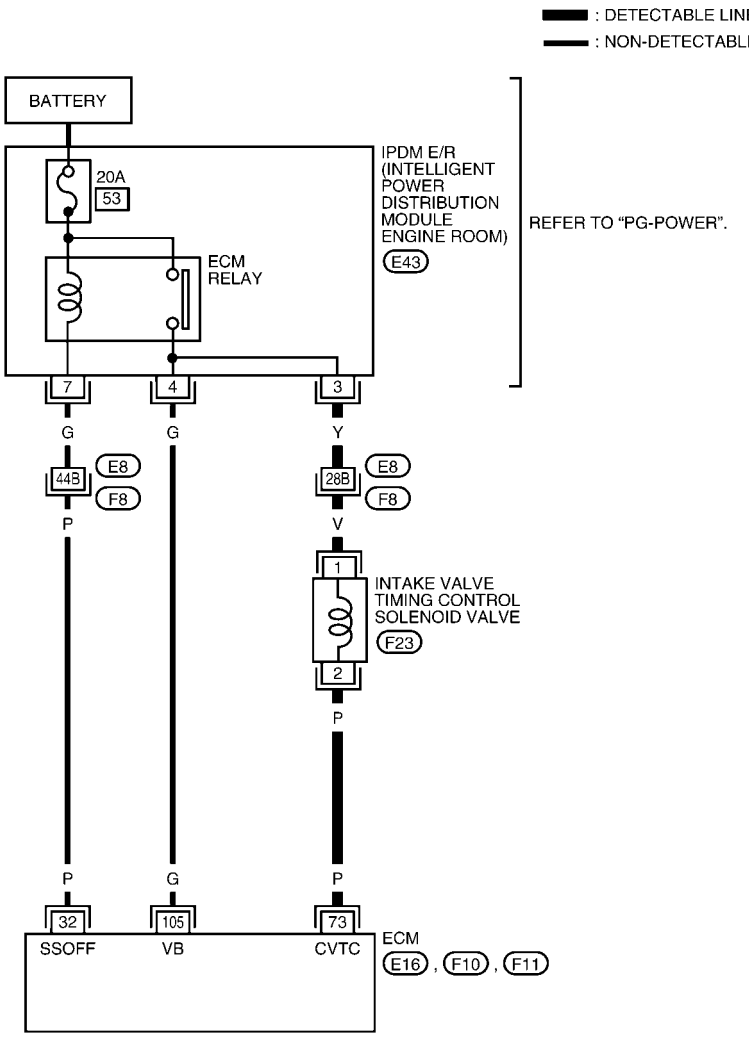

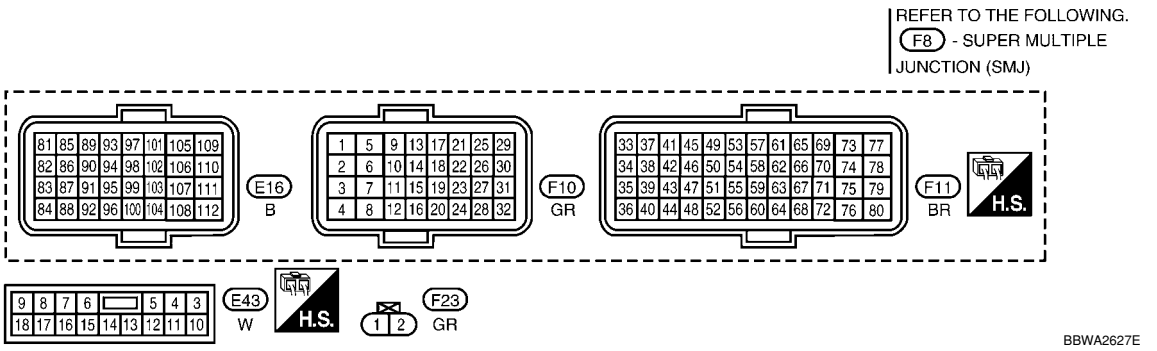

Specification data are reference values and are measured between each terminal and ground.
Pulse signal is measured by CONSULT-II.

CAUTION:

Do not use ECM ground terminals when measuring input/output voltage. Doing so may result in damage to the ECM's transistor. Use a ground other than ECM terminals, such as the ground.

TERMINAL NO.	WIRE COLOR	ITEM	CONDITION	DATA (DC Voltage)
32	P	ECM relay (Self shut-off)	**[Engine is running]** **[Ignition switch: OFF]** • For a few seconds after turning ignition switch OFF	0 - 1.0V
			[Ignition switch: OFF] • More than a few seconds after turning ignition switch OFF	BATTERY VOLTAGE (11 - 14V)
73	P	Intake valve timing control solenoid valve	**[Engine is running]** • **Warm-up condition** • Idle speed	BATTERY VOLTAGE (11 - 14V)
			[Engine is running] • **Warm-up condition** • When revving engine up to 2,000 rpm quickly	7 - 10V★ 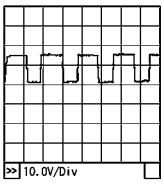 PBIA4937J
105	G	Power supply for ECM	**[Ignition switch: ON]**	BATTERY VOLTAGE (11 - 14V)

★: Average voltage for pulse signal (Actual pulse signal can be confirmed by oscilloscope.)

Diagnosis Procedure

INFOID:0000000001702645

1. CHECK INTAKE VALVE TIMING CONTROL SOLENOID VALVE POWER SUPPLY CIRCUIT

1. Turn ignition switch OFF.
2. Disconnect intake valve timing control solenoid valve (1) harness connector.
3. Turn ignition switch ON.

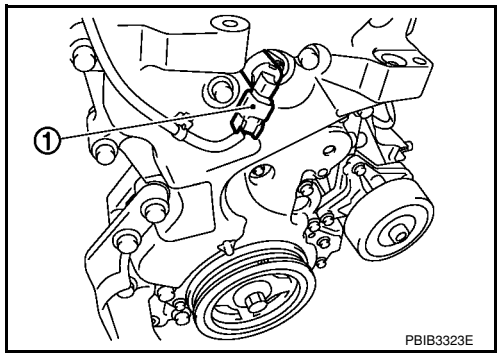

4. Check voltage between intake valve timing control solenoid valve terminal 1 and ground with CONSULT-II or tester.

Voltage: Battery voltage

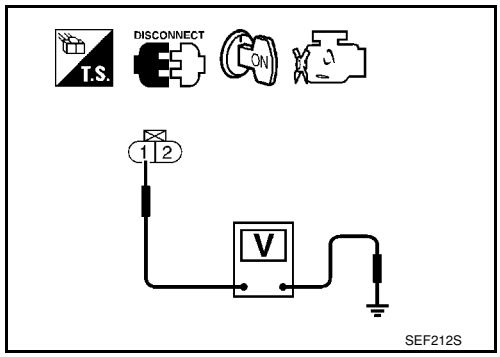

OK or NG

OK >> GO TO 3.
NG >> GO TO 2.

2. DETECT MALFUNCTION PART

Check the following.

- Harness connectors E8, F8
- Harness for open or short between intake valve timing control solenoid valve and IPDM E/R

>> Repair or replace harness or connectors.

3. CHECK INTAKE VALVE TIMING CONTROL SOLENOID VALVE OUTPUT SIGNAL CIRCUIT FOR OPEN AND SHORT

1. Turn ignition switch OFF.
2. Disconnect ECM harness connector.
3. Check harness continuity between ECM terminal 73 and intake valve timing control solenoid valve terminal 2. Refer to Wiring Diagram.

Continuity should exist.

4. Also check harness for short to ground and short to power.

OK or NG

OK >> GO TO 4.
NG >> Repair open circuit or short to ground or short to power in harness or connectors.

4. CHECK INTAKE VALVE TIMING CONTROL SOLENOID VALVE

Refer to EC-165, "Component Inspection".

OK or NG

OK >> GO TO 5.
NG >> Replace intake valve timing control solenoid valve.

5. CHECK INTERMITTENT INCIDENT

Refer to EC-136.

>> **INSPECTION END**

Component Inspection

INFOID:0000000001702646

INTAKE VALVE TIMING CONTROL SOLENOID VALVE

1. Disconnect intake valve timing control solenoid valve harness connector.
2. Check resistance between intake valve timing control solenoid valve as follows.

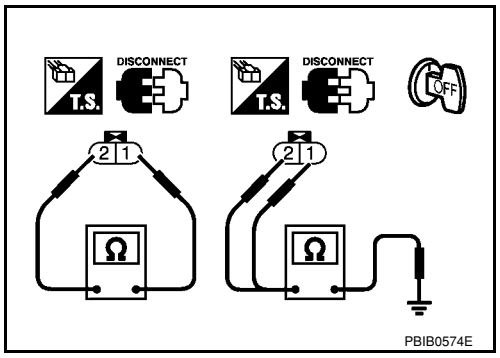

Terminal	Resistance
1 and 2	6.7 - 7.7Ω [at 20°C (68°F)]
1 or 2 and ground	∞Ω (Continuity should not exist.)

If NG, replace intake valve timing control solenoid valve.
If OK, go to next step.

3. Remove intake valve timing control solenoid valve.
4. Provide 12V DC between intake valve timing control solenoid valve terminals and then interrupt it. Make sure that the plunger moves as shown in the figure.

CAUTION:
Do not apply 12V DC continuously for 5 seconds or more. Doing so may result in damage to the coil in intake valve timing control solenoid valve.
If NG, replace intake valve timing control solenoid valve.
NOTE:
Always replace O-ring when intake valve timing control solenoid valve is removed.

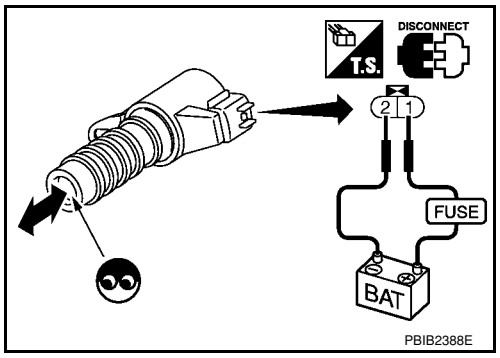

Removal and Installation

INFOID:0000000001702647

INTAKE VALVE TIMING CONTROL SOLENOID VALVE

Refer to EM-37.

DTC P0101 MAF SENSOR

Component Description

INFOID:0000000001702648

The mass air flow sensor (1) is placed in the stream of intake air. It measures the intake flow rate by measuring a part of the entire intake flow. The mass air flow sensor controls the temperature of the hot wire to a certain amount. The heat generated by the hot wire is reduced as the intake air flows around it. The more air, the greater the heat loss.
Therefore, the electric current supplied to hot wire is changed to maintain the temperature of the hot wire as air flow increases. The ECM detects the air flow by means of this current change.

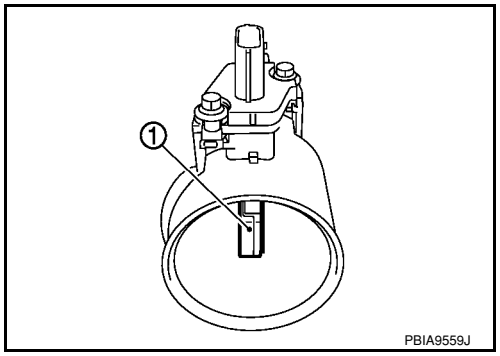

CONSULT-II Reference Value in Data Monitor Mode

INFOID:0000000001702649

Specification data are reference values.

MONITOR ITEM	CONDITION		SPECIFICATION
MAS A/F SE-B1	• See EC-127.		
CAL/LD VALUE	• Engine: After warming up • Shift lever: P or N (A/T, CVT), Neutral (M/T) • Air conditioner switch: OFF • No load	Idle	10% - 35%
		2,500 rpm	10% - 35%
MASS AIRFLOW	• Engine: After warming up • Shift lever: P or N (A/T, CVT), Neutral (M/T) • Air conditioner switch: OFF • No load	Idle	1.0 - 4.0 g·m/s
		2,500 rpm	4.0 - 10.0 g·m/s

On Board Diagnosis Logic

INFOID:0000000001702650

DTC No.	Trouble diagnosis name	DTC detecting condition		Possible cause
P0101 0101	Mass air flow sensor circuit range/performance	A)	A high voltage from the sensor is sent to ECM under light load driving condition.	• Harness or connectors (Mass air flow sensor circuit is open or shorted.) • Mass air flow sensor • EVAP control system pressure sensor • Intake air temperature sensor
		B)	A low voltage from the sensor is sent to ECM under heavy load driving condition.	• Harness or connectors (Mass air flow sensor circuit is open or shorted.) • Intake air leaks • Mass air flow sensor • EVAP control system pressure sensor • Intake air temperature sensor

DTC Confirmation Procedure

INFOID:0000000001702651

Perform PROCEDURE FOR MALFUNCTION A first.
If the DTC cannot be confirmed, perform PROCEDURE FOR MALFUNCTION B.
NOTE:
If DTC Confirmation Procedure has been previously conducted, always turn ignition switch OFF and wait at least 10 seconds before conducting the next test.

PROCEDURE FOR MALFUNCTION A

NOTE:
If engine will not start or stops soon, wait at least 10 seconds with engine stopped (Ignition switch ON) instead of running engine at idle speed.

With CONSULT-II
1. Turn ignition switch ON.
2. Select “DATA MONITOR” mode with CONSULT-II.
3. Start engine and warm it up to normal operating temperature.
4. Run engine for at least 10 seconds at idle speed.
5. If 1st trip DTC is detected, go to EC-171, "Diagnosis Procedure".

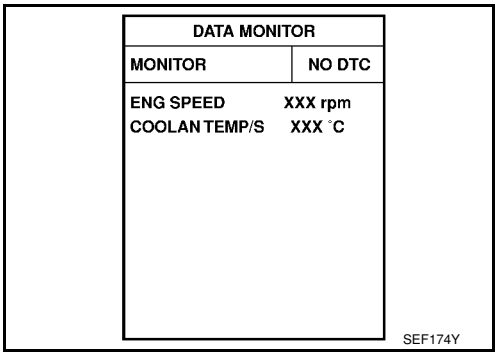

With GST
Follow the procedure “With CONSULT-II” above.

PROCEDURE FOR MALFUNCTION B

CAUTION:
Always drive vehicle at a safe speed.

With CONSULT-II
1. Turn ignition switch ON.
2. Start engine and warm it up to normal operating temperature.
   If engine cannot be started, go to EC-171, "Diagnosis Procedure".
3. Select “DATA MONITOR” mode with CONSULT-II.
4. Check the voltage of “MAS A/F SE-B1” with “DATA MONITOR”.
5. Increases engine speed to about 4,000 rpm.
6. Monitor the linear voltage rise in response to engine speed increases.
   If NG, go to EC-171, "Diagnosis Procedure".
   If OK, go to following step.

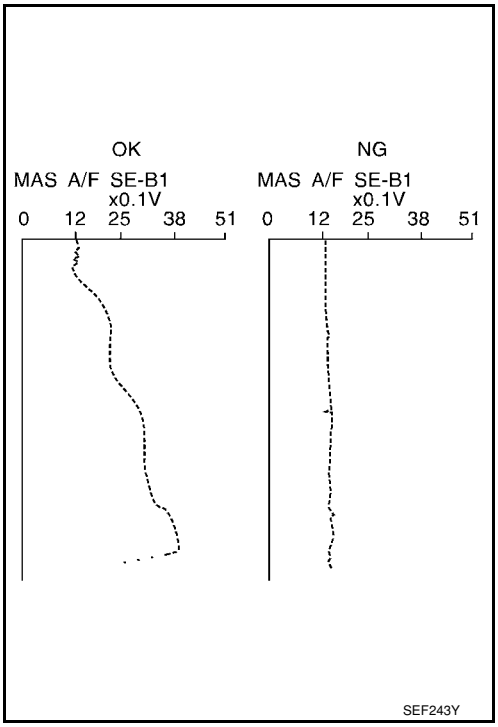

7. Maintain the following conditions for at least 10 consecutive seconds.

ENG SPEED	More than 2,000 rpm
THRTL SEN 1	More than 3V
THRTL SEN 2	More than 3V
Shift lever	Suitable position
Driving location	Driving vehicle uphill (Increased engine load) will help maintain the driving conditions required for this test.

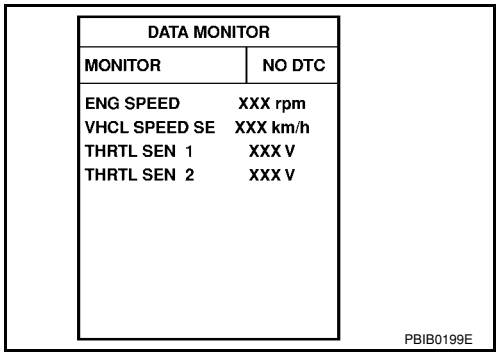

8. If 1st trip DTC is detected, go to EC-171, "Diagnosis Procedure".

Overall Function Check

INFOID:0000000001702652

PROCEDURE FOR MALFUNCTION B

Use this procedure to check the overall function of the mass air flow sensor circuit. During this check, a 1st DTC might not be confirmed.

With GST

1. Start engine and warm it up to normal operating temperature.
2. Select Service $01 with GST.
3. Check the mass air flow sensor signal with Service $01.
4. Check for linear mass air flow sensor signal value rise in response to increases to about 4,000 rpm in engine speed.
5. If NG, go to EC-171, "Diagnosis Procedure".

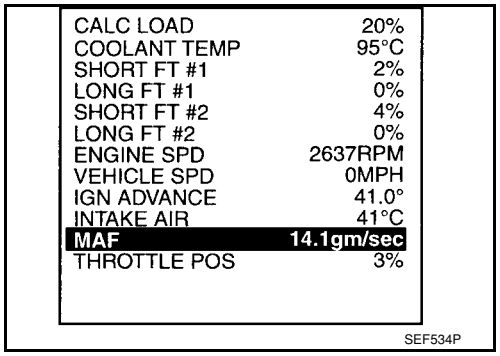

Wiring Diagram

INFOID:0000000001702653

EC-MAFS-01

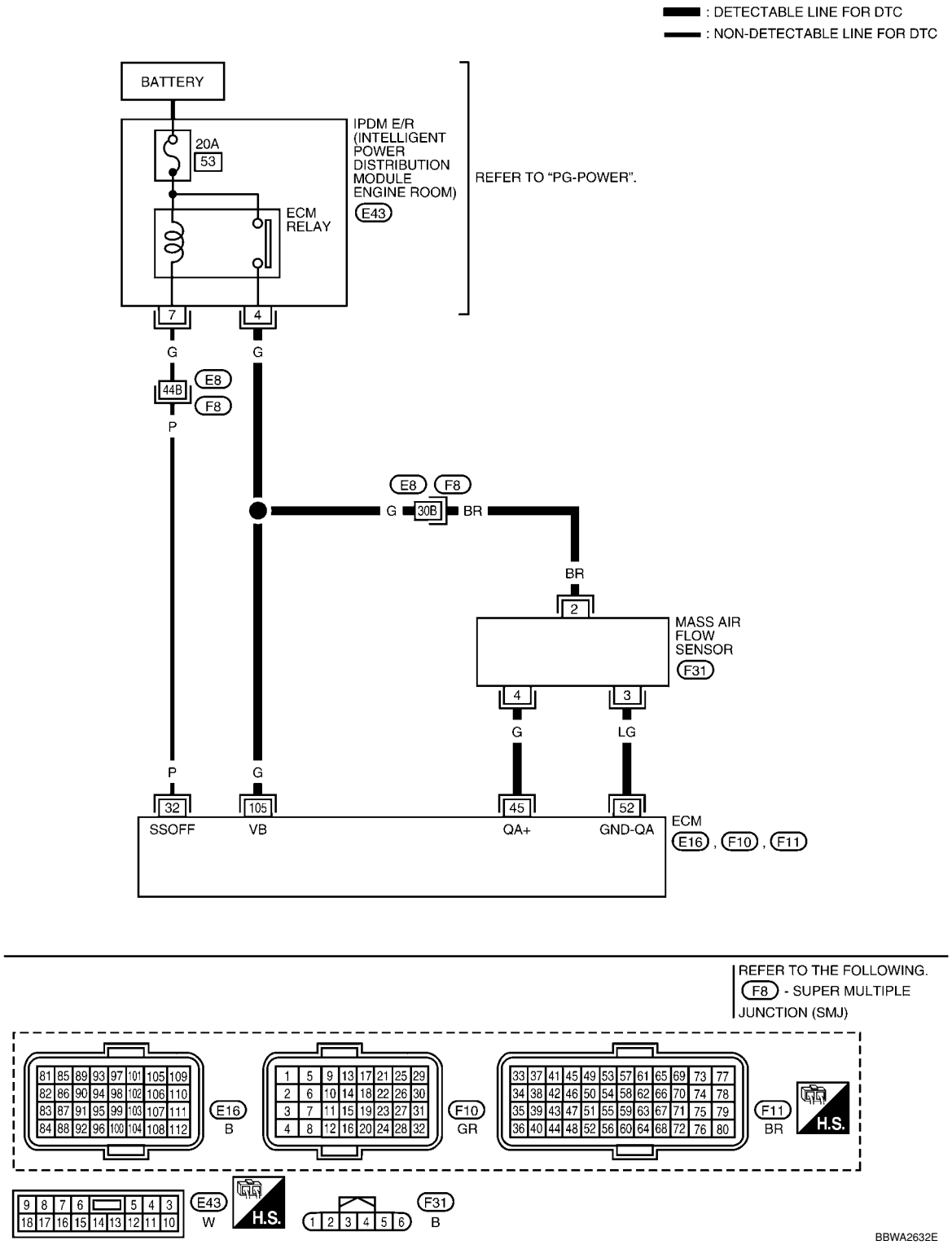

Specification data are reference values and are measured between each terminal and ground.

CAUTION:

Do not use ECM ground terminals when measuring input/output voltage. Doing so may result in damage to the ECM's transistor. Use a ground other than ECM terminals, such as the ground.

TERMINAL NO.	WIRE COLOR	ITEM	CONDITION	DATA (DC Voltage)
32	P	ECM relay (Self shut-off)	**[Engine is running]** **[Ignition switch: OFF]** • For a few seconds after turning ignition switch OFF	0 - 1.0V
			[Ignition switch: OFF] • More than a few seconds after turning ignition switch OFF	BATTERY VOLTAGE (11 - 14V)
45	G	Mass air flow sensor	**[Engine is running]** • **Warm-up condition** • Idle speed	0.8 - 1.1V
			[Engine is running] • **Warm-up condition** • Engine speed: 2,500 rpm	1.4 - 1.7V
52	LG	Sensor ground (Mass air flow sensor)	**[Engine is running]** • **Warm-up condition** • Idle speed	Approximately 0V
105	G	Power supply for ECM	**[Ignition switch: ON]**	BATTERY VOLTAGE (11 - 14V)

Diagnosis Procedure

INFOID:0000000001702654

1. INSPECTION START

Which malfunction (A or B) is duplicated?

A or B

A >> GO TO 3.
B >> GO TO 2.

2. CHECK INTAKE AIR LEAK

Check the following for connections.
- Air duct
- Vacuum hoses
- Intake air passage between air duct and intake manifold

OK or NG

OK >> GO TO 3.
NG >> Reconnect the parts.

3. CHECK GROUND CONNECTIONS

1. Turn ignition switch OFF.
2. Loosen and retighten ground screw on the body.
   Refer to EC-142, "Ground Inspection".

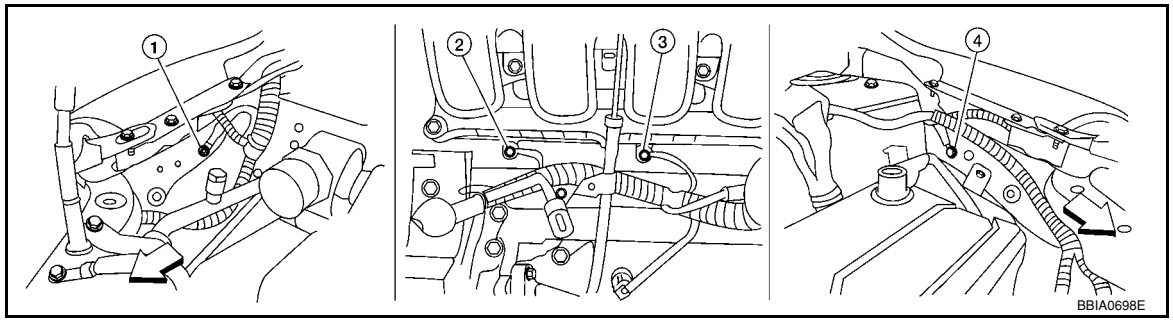

⇦: Vehicle front

1. Body ground E24
2. Engine ground F9
3. Engine ground F16
4. Body ground E15

OK or NG

OK >> GO TO 4.
NG >> Repair or replace ground connections.

4. CHECK MAF SENSOR POWER SUPPLY CIRCUIT

1. Disconnect mass air flow (MAF) sensor (1) harness connector.
2. Turn ignition switch ON.

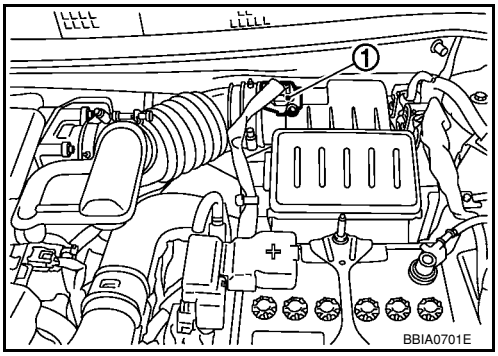

3. Check voltage between MAF sensor terminal 2 and ground with CONSULT-II or tester.

Voltage: Battery voltage

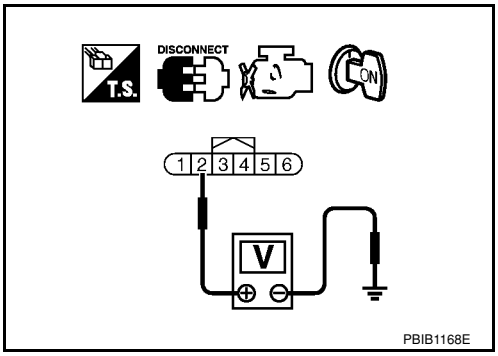

OK or NG

OK >> GO TO 6.
NG >> GO TO 5.

5. DETECT MALFUNCTIONING PART

Check the following.
- Harness connectors E8, F8
- Harness for open or short between mass air flow sensor and IPDM E/R
- Harness for open or short between mass air flow sensor and ECM

>> Repair open circuit or short to ground or short to power in harness or connectors.

6. CHECK MAF SENSOR GROUND CIRCUIT FOR OPEN AND SHORT

1. Turn ignition switch OFF.
2. Disconnect ECM harness connector.
3. Check harness continuity between MAF sensor terminal 3 and ECM terminal 52.
   Refer to Wiring Diagram.

Continuity should exist.

4. Also check harness for short to ground and short to power.

OK or NG

OK >> GO TO 7.
NG >> Repair open circuit or short to ground or short to power in harness or connectors.

7. CHECK MAF SENSOR INPUT SIGNAL CIRCUIT FOR OPEN AND SHORT

1. Check harness continuity between MAF sensor terminal 4 and ECM terminal 45.
   Refer to Wiring Diagram.

Continuity should exist.

2. Also check harness for short to ground and short to power.

OK or NG

OK >> GO TO 8.
NG >> Repair open circuit or short to ground or short or short to power in harness or connectors.

8. CHECK INTAKE AIR TEMPERATURE SENSOR

Refer to EC-202, "Component Inspection".

OK or NG

OK >> GO TO 9.
NG >> Replace intake air temperature sensor.

9. CHECK EVAP CONTROL SYSTEM PRESSURE SENSOR

Refer to EC-353, "Component Inspection".

OK or NG

OK >> GO TO 10.
NG >> Replace EVAP control system pressure sensor.

10. CHECK MASS AIR FLOW SENSOR

Refer to EC-173, "Component Inspection".

OK or NG

OK >> GO TO 11.
NG >> Replace mass air flow sensor.

11. CHECK INTERMITTENT INCIDENT

Perform EC-136.

>> **INSPECTION END**

Component Inspection

INFOID:0000000001702655

MASS AIR FLOW SENSOR

With CONSULT-II

1. Reconnect all harness connectors disconnected.
2. Start engine and warm it up to normal operating temperature.
3. Connect CONSULT-II and select “DATA MONITOR” mode.
4. Select “MAS A/F SE-B1” and check indication under the following conditions.

Condition	MAS A/F SE-B1 (V)
Ignition switch ON (Engine stopped.)	Approx 0.4
Idle (Engine is warmed-up to normal operating temperature.)	0.8 - 1.1
2,500 rpm (Engine is warmed-up to normal operating temperature.)	1.4 - 1.7
Idle to about 4,000 rpm	0.8 - 1.1 to 2.4*

*: Check for linear voltage rise in response to engine being increased to about 4,000 rpm.

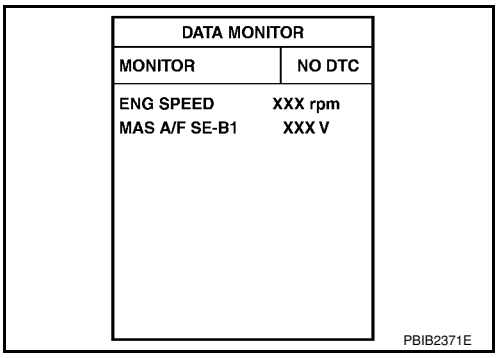

5. If the voltage is out of specification, proceed the following.

a. Check for the cause of uneven air flow through mass air flow sensor. Refer to following.
   - Crushed air ducts
   - Malfunctioning seal of air cleaner element
   - Uneven dirt of air cleaner element
   - Improper specification of intake air system parts

b. If NG, repair or replace malfunctioning part and perform step 2 to 4 again.
If OK, go to next step.

6. Turn ignition switch OFF.
7. Disconnect mass air flow sensor harness connector and reconnect it again.
8. Perform step 2 to 4 again.
9. If NG, clean or replace mass air flow sensor.

Without CONSULT-II

1. Reconnect all harness connectors disconnected.
2. Start engine and warm it up to normal operating temperature.
3. Check voltage between ECM terminal 45 (Mass air flow sensor signal) and ground.

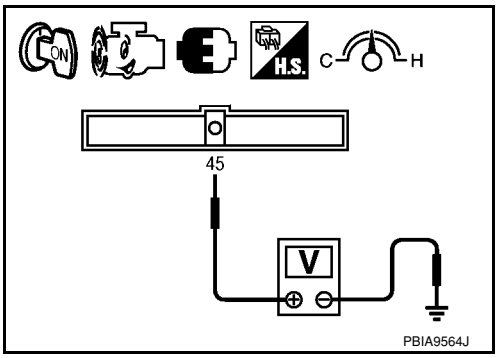

Condition	Voltage V
Ignition switch ON (Engine stopped.)	Approx 0.4
Idle (Engine is warmed-up to normal operating temperature.)	0.8 - 1.1
2,500 rpm (Engine is warmed-up to normal operating temperature.)	1.4 - 1.7
Idle to about 4,000 rpm	0.8 - 1.1 to 2.4*

*: Check for linear voltage rise in response to engine being increased to about 4,000 rpm.

4. If the voltage is out of specification, proceed the following.

a. Check for the cause of uneven air flow through mass air flow sensor. Refer to following.
- Crushed air ducts
- Malfunctioning seal of air cleaner element
- Uneven dirt of air cleaner element
- Improper specification of intake air system parts

b. If NG, repair or replace malfunctioning part and perform step 2 and 3 again.
If OK, go to next step.

5. Turn ignition switch OFF.
6. Disconnect mass air flow sensor harness connector and reconnect it again.
7. Perform step 2 and 3 again.
8. If NG, clean or replace mass air flow sensor.

Removal and Installation

INFOID:0000000001702656

MASS AIR FLOW SENSOR

Refer to EM-16.

DTC P0102, P0103 MAF SENSOR

Component Description

INFOID:0000000001702657

The mass air flow sensor (1) is placed in the stream of intake air. It measures the intake flow rate by measuring a part of the entire intake flow. The mass air flow sensor controls the temperature of the hot wire to a certain amount. The heat generated by the hot wire is reduced as the intake air flows around it. The more air, the greater the heat loss.
Therefore, the electric current supplied to hot wire is changed to maintain the temperature of the hot wire as air flow increases. The ECM detects the air flow by means of this current change.

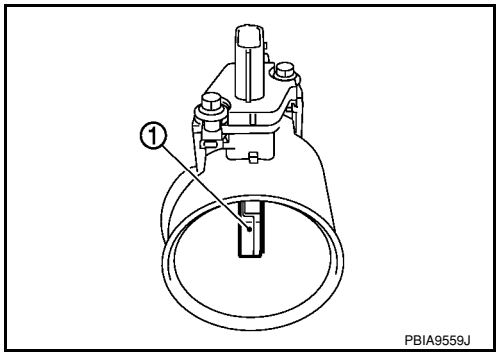

CONSULT-II Reference Value in Data Monitor Mode

INFOID:0000000001702658

Specification data are reference values.

MONITOR ITEM	CONDITION		SPECIFICATION
MAS A/F SE-B1	See EC-127.		
CAL/LD VALUE	• Engine: After warming up • Shift lever: P or N (A/T, CVT), Neutral (M/T) • Air conditioner switch: OFF • No load	Idle	10% - 35%
		2,500 rpm	10% - 35%
MASS AIRFLOW	• Engine: After warming up • Shift lever: P or N (A/T, CVT), Neutral (M/T) • Air conditioner switch: OFF • No load	Idle	1.0 - 4.0 g·m/s
		2,500 rpm	4.0 - 10.0 g·m/s

On Board Diagnosis Logic

INFOID:0000000001702659

These self-diagnoses have the one trip detection logic.

DTC No.	Trouble diagnosis name	DTC detecting condition	Possible cause
P0102 0102	Mass air flow sensor circuit low input	An excessively low voltage from the sensor is sent to ECM.	• Harness or connectors (Mass air flow sensor circuit is open or shorted.) • Intake air leaks • Mass air flow sensor
P0103 0103	Mass air flow sensor circuit high input	An excessively high voltage from the sensor is sent to ECM.	• Harness or connectors (Mass air flow sensor circuit is open or shorted.) • Mass air flow sensor

FAIL-SAFE MODE

When the malfunction is detected, the ECM enters fail-safe mode and the MIL lights up.

Detected items	Engine operating condition in fail-safe mode
Mass air flow sensor circuit	Engine speed will not rise more than 2,400 rpm due to the fuel cut.

DTC Confirmation Procedure

INFOID:0000000001702660

NOTE:
If DTC Confirmation Procedure has been previously conducted, always turn ignition switch OFF and wait at least 10 seconds before conducting the next test.

PROCEDURE FOR DTC P0102

With CONSULT-II

1. Turn ignition switch ON.
2. Select “DATA MONITOR” mode with CONSULT-II.
3. Start engine and wait at least 5 seconds.
4. If DTC is detected, go to EC-178, "Diagnosis Procedure".

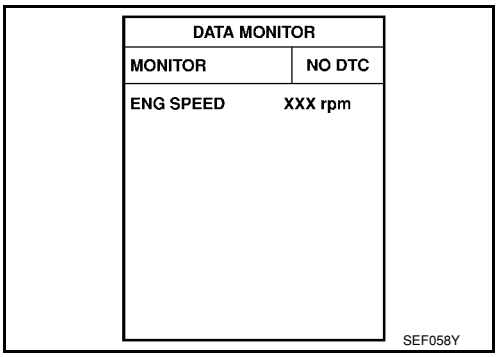

With GST

Follow the procedure “With CONSULT-II” above.

PROCEDURE FOR DTC P0103

With CONSULT-II

1. Turn ignition switch ON.
2. Select “DATA MONITOR” mode with CONSULT-II.
3. Wait at least 5 seconds.
4. If DTC is detected, go to EC-178, "Diagnosis Procedure".
   If DTC is not detected, go to next step.
5. Start engine and wait at least 5 seconds.
6. If DTC is detected, go to EC-178, "Diagnosis Procedure".

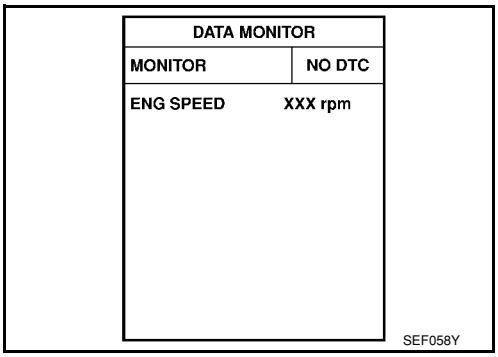

With GST

Follow the procedure “With CONSULT-II” above.

Wiring Diagram

INFOID:0000000001702661

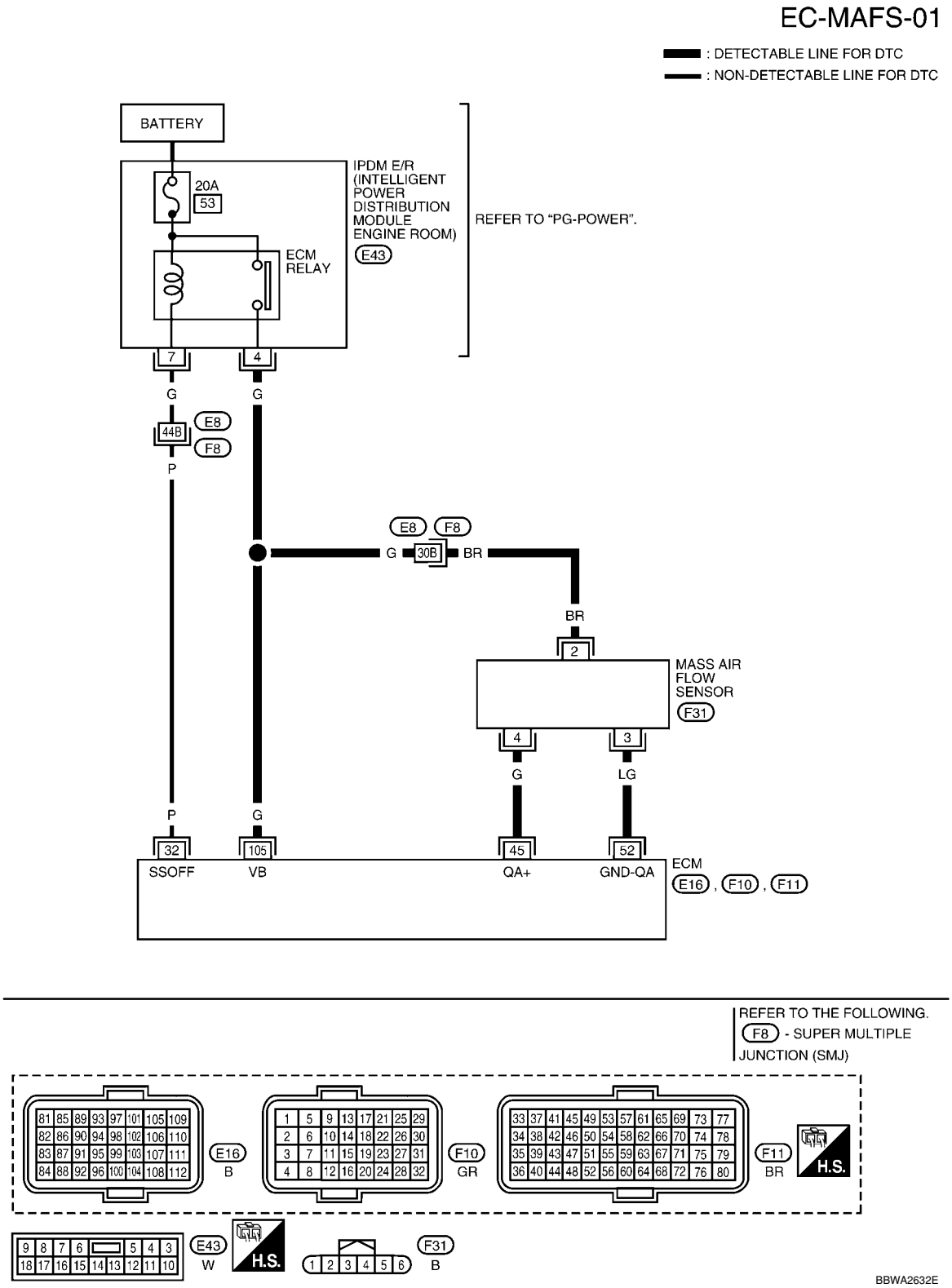

Specification data are reference values and are measured between each terminal and ground.

CAUTION:

Do not use ECM ground terminals when measuring input/output voltage. Doing so may result in damage to the ECM's transistor. Use a ground other than ECM terminals, such as the ground.

TERMINAL NO.	WIRE COLOR	ITEM	CONDITION	DATA (DC Voltage)
32	P	ECM relay (Self shut-off)	**[Engine is running]** **[Ignition switch: OFF]** • For a few seconds after turning ignition switch OFF	0 - 1.0V
			[Ignition switch: OFF] • More than a few seconds after turning ignition switch OFF	BATTERY VOLTAGE (11 - 14V)
45	G	Mass air flow sensor	**[Engine is running]** • **Warm-up condition** • Idle speed	0.8 - 1.1V
			[Engine is running] • **Warm-up condition** • Engine speed: 2,500 rpm	1.4 - 1.7V
52	LG	Sensor ground (Mass air flow sensor)	**[Engine is running]** • **Warm-up condition** • Idle speed	Approximately 0V
105	G	Power supply for ECM	**[Ignition switch: ON]**	BATTERY VOLTAGE (11 - 14V)

Diagnosis Procedure

INFOID:0000000001702662

1. INSPECTION START

Which malfunction (P0102 or P0103) is duplicated?

P0102 or P0103

P0102 >> GO TO 2.
P0103 >> GO TO 3.

2. CHECK INTAKE SYSTEM

Check the following for connection.
- Air duct
- Vacuum hoses
- Intake air passage between air duct and intake manifold

OK or NG

OK >> GO TO 3.
NG >> Reconnect the parts.

3. CHECK GROUND CONNECTIONS

1. Turn ignition switch OFF.
2. Loosen and retighten ground screw on the body.
   Refer to EC-142, "Ground Inspection".

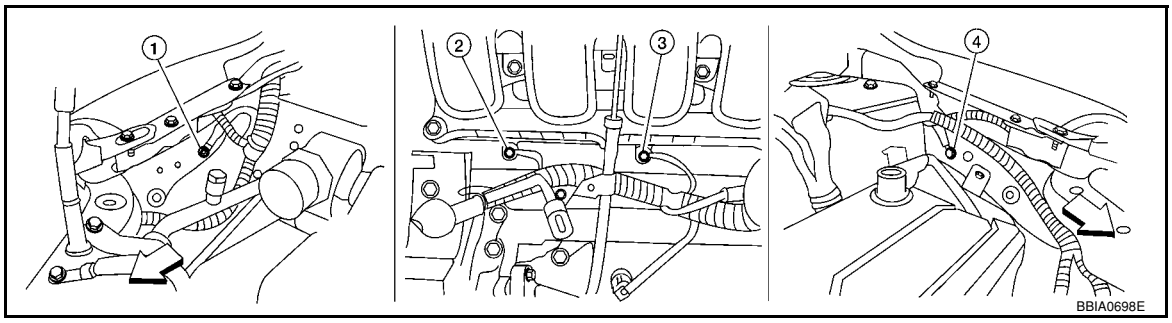

⇦ Vehicle front

1. Body ground E24
2. Engine ground F9
3. Engine ground F16
4. Body ground E15

OK or NG

OK >> GO TO 4.
NG >> Repair or replace ground connections.

4. CHECK MAF SENSOR POWER SUPPLY CIRCUIT

1. Disconnect mass air flow (MAF) sensor (1) harness connector.
2. Turn ignition switch ON.

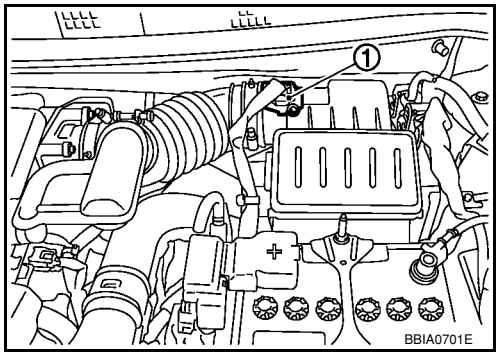

3. Check voltage between MAF sensor terminal 2 and ground with CONSULT-II or tester.

Voltage: Battery voltage

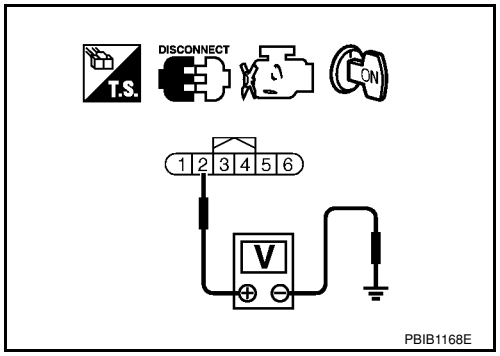

OK or NG

OK >> GO TO 6.
NG >> GO TO 5.

5. DETECT MALFUNCTIONING PART

Check the following.
- Harness connectors E8, F8
- Harness for open or short between mass air flow sensor and ECM
- Harness for open or short between mass air flow sensor and IPDM E/R

>> Repair open circuit or short to ground or short to power in harness or connectors.

6. CHECK MAF SENSOR GROUND CIRCUIT FOR OPEN AND SHORT

1. Turn ignition switch OFF.
2. Disconnect ECM harness connector.
3. Check harness continuity between MAF sensor terminal 3 and ECM terminal 52.
   Refer to Wiring Diagram.

Continuity should exist.

4. Also check harness for short to ground and short to power.

OK or NG

OK >> GO TO 7.
NG >> Repair open circuit or short to ground or short to power in harness or connectors.

7. CHECK MAF SENSOR INPUT SIGNAL CIRCUIT FOR OPEN AND SHORT

1. Check harness continuity between MAF sensor terminal 4 and ECM terminal 45.
   Refer to Wiring Diagram.

Continuity should exist.

2. Also check harness for short to ground and short to power.

OK or NG

OK >> GO TO 8.
NG >> Repair open circuit or short to ground or short to power in harness or connectors.

8. CHECK MASS AIR FLOW SENSOR

Refer to EC-180, "Component Inspection".

OK or NG

OK >> GO TO 9.
NG >> Replace mass air flow sensor.

9. CHECK INTERMITTENT INCIDENT

Refer to EC-136.

>> **INSPECTION END**

Component Inspection

INFOID:0000000001702663

MASS AIR FLOW SENSOR

With CONSULT-II

1. Reconnect all harness connectors disconnected.
2. Start engine and warm it up to normal operating temperature.
3. Connect CONSULT-II and select “DATA MONITOR” mode.
4. Select “MAS A/F SE-B1” and check indication under the following conditions.

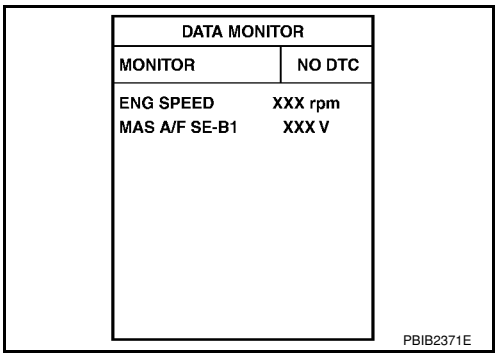

Condition	MAS A/F SE-B1 (V)
Ignition switch ON (Engine stopped.)	Approx 0.4
Idle (Engine is warmed-up to normal operating temperature.)	0.8 - 1.1
2,500 rpm (Engine is warmed-up to normal operating temperature.)	1.4 - 1.7
Idle to about 4,000 rpm	0.8 - 1.1 to 2.4*

*: Check for linear voltage rise in response to engine being increased to about 4,000 rpm.

5. If the voltage is out of specification, proceed the following.

a. Check for the cause of uneven air flow through mass air flow sensor. Refer to following.
   - Crushed air ducts
   - Malfunctioning seal of air cleaner element
   - Uneven dirt of air cleaner element
   - Improper specification of intake air system parts

b. If NG, repair or replace malfunctioning part and perform step 2 to 4 again.
   If OK, go to next step.

6. Turn ignition switch OFF.
7. Disconnect mass air flow sensor harness connector and reconnect it again.
8. Perform step 2 to 4 again.
9. If NG, clean or replace mass air flow sensor.

Without CONSULT-II

1. Reconnect all harness connectors disconnected.
2. Start engine and warm it up to normal operating temperature.

3. Check voltage between ECM terminal 45 (Mass air flow sensor signal) and ground.

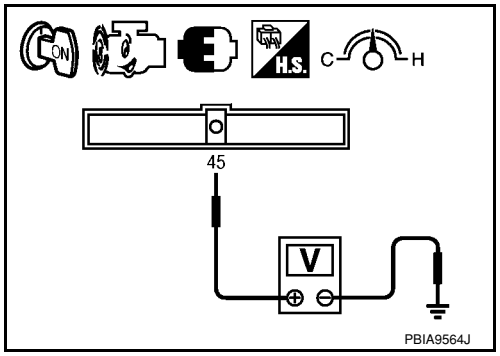

Condition	MAS A/F SE-B1 (V)
Ignition switch ON (Engine stopped.)	Approx 0.4
Idle (Engine is warmed-up to normal operating temperature.)	0.8 - 1.1
2,500 rpm (Engine is warmed-up to normal operating temperature.)	1.4 - 1.7
Idle to about 4,000 rpm	0.8 - 1.1 to 2.4*

*: Check for linear voltage rise in response to engine being increased to about 4,000 rpm.

4. If the voltage is out of specification, proceed the following.

a. Check for the cause of uneven air flow through mass air flow sensor. Refer to following.
   - Crushed air ducts
   - Malfunctioning seal of air cleaner element
   - Uneven dirt of air cleaner element
   - Improper specification of intake air system parts

b. If NG, repair or replace malfunctioning part and perform step 2 and 3 again.
   If OK, go to next step.

5. Turn ignition switch OFF.
6. Disconnect mass air flow sensor harness connector and reconnect it again.
7. Perform step 2 and 3 again.
8. If NG, clean or replace mass air flow sensor.

Removal and Installation

INFOID:0000000001702664

MASS AIR FLOW SENSOR

Refer to EM-16.

DTC P0112, P0113 IAT SENSOR

Component Description

INFOID:0000000001702665

The intake air temperature sensor is built-into mass air flow sensor (1). The sensor detects intake air temperature and transmits a signal to the ECM.
The temperature sensing unit uses a thermistor which is sensitive to the change in temperature. Electrical resistance of the thermistor decreases in response to the temperature rise.

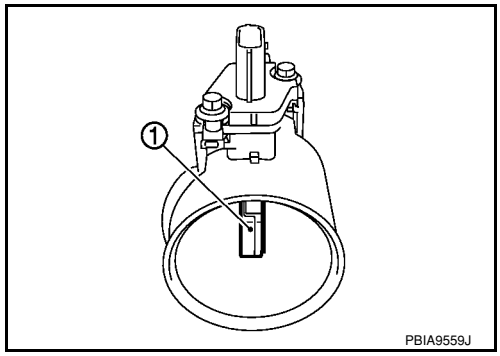

<Reference data>

Intake air temperature °C (°F)	Voltage* V	Resistance kΩ
25 (77)	3.3	1.800 - 2.200
80 (176)	1.2	0.283 - 0.359

*: This data is reference value and is measured between ECM terminal 46 (Intake air temperature sensor) and ground.

CAUTION:
Do not use ECM ground terminals when measuring input/output voltage. Doing so may result in damage to the ECM's transistor. Use a ground other than ECM terminals, such as the ground.

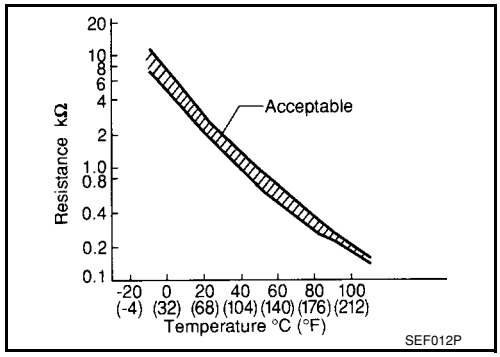

On Board Diagnosis Logic

INFOID:0000000001702666

DTC No.	Trouble diagnosis name	DTC detecting condition	Possible cause
P0112 0112	Intake air temperature sensor circuit low input	An excessively low voltage from the sensor is sent to ECM.	• Harness or connectors (Intake air temperature sensor circuit is open or shorted.) • Intake air temperature sensor
P0113 0113	Intake air temperature sensor circuit high input	An excessively high voltage from the sensor is sent to ECM.	

DTC Confirmation Procedure

INFOID:0000000001702667

NOTE:
If DTC Confirmation Procedure has been previously conducted, always turn ignition switch OFF and wait at least 10 seconds before conducting the next test.

WITH CONSULT-II

1. Turn ignition switch ON.

2. Select “DATA MONITOR” mode with CONSULT-II.
3. Wait at least 5 seconds.
4. If 1st trip DTC is detected, go to EC-184, "Diagnosis Procedure".

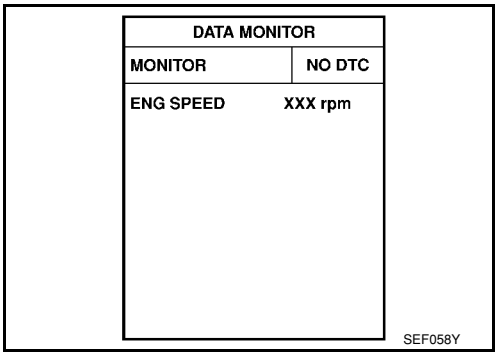

WITH GST

Follow the procedure “WITH CONSULT-II” above.

Wiring Diagram

INFOID:0000000001702668

EC-IATS-01

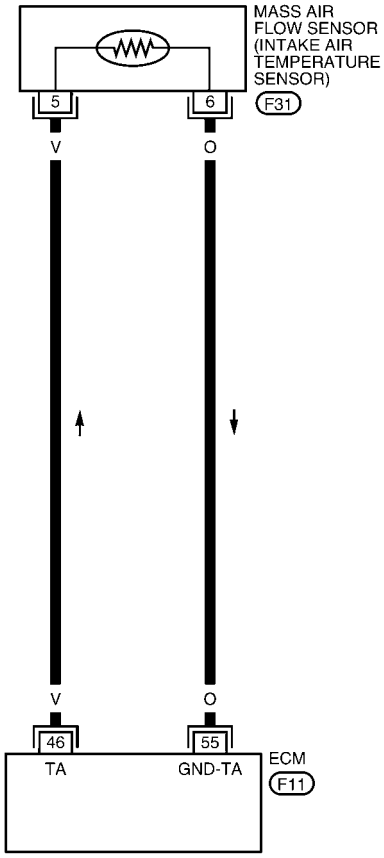

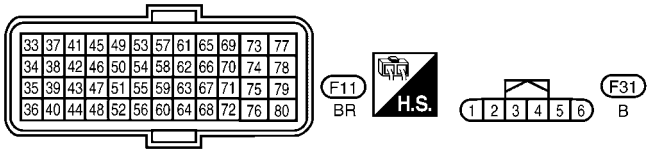

BBWA2633E

Diagnosis Procedure

INFOID:0000000001702669

1. CHECK GROUND CONNECTIONS

1. Turn ignition switch OFF.
2. Loosen and retighten ground screw on the body.
   Refer to EC-142, "Ground Inspection".

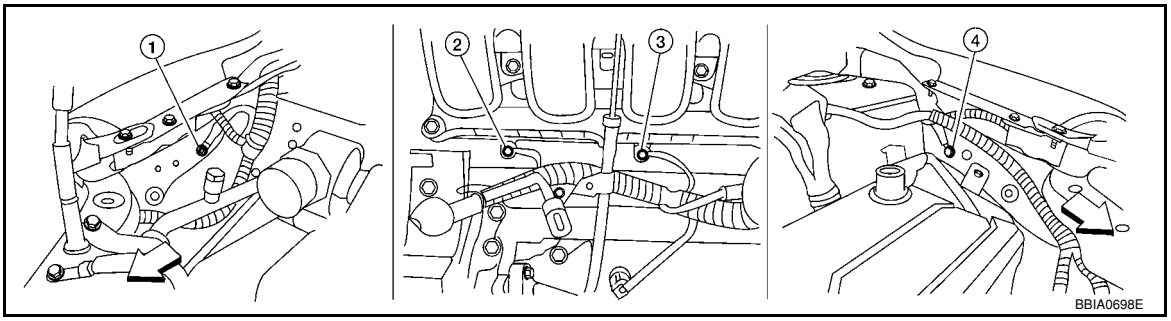

⇦ Vehicle front

1. Body ground E24
2. Engine ground F9
3. Engine ground F16
4. Body ground E15

OK or NG

OK >> GO TO 2.
NG >> Repair or replace ground connections.

2. CHECK INTAKE AIR TEMPERATURE SENSOR POWER SUPPLY CIRCUIT

1. Disconnect mass air flow sensor (with intake air temperature sensor) (1) harness connector.
2. Turn ignition switch ON.

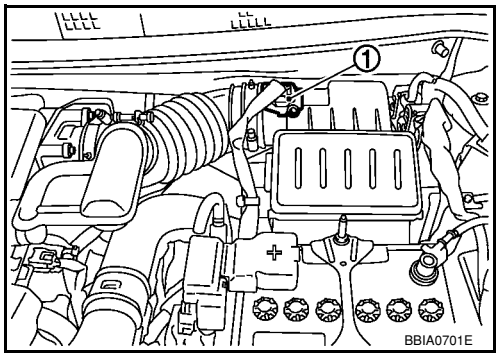

3. Check voltage between mass air flow sensor terminal 5 and ground with CONSULT-II or tester.

Voltage: Approximately 5V

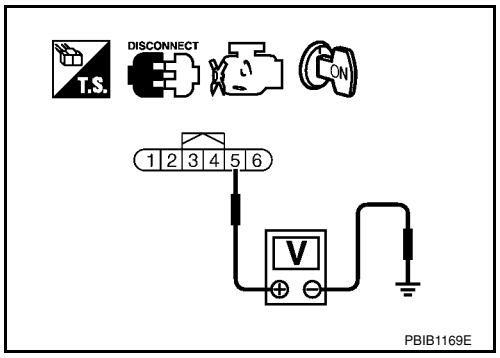

OK or NG

OK >> GO TO 3.
NG >> Repair open circuit or short to ground or short to power in harness or connectors.

3. CHECK INTAKE AIR TEMPERATURE SENSOR GROUND CIRCUIT FOR OPEN AND SHORT

1. Turn ignition switch OFF.
2. Disconnect ECM harness connector.
3. Check harness continuity between mass air flow sensor terminal 6 and ECM terminal 55. Refer to Wiring Diagram.

Continuity should exist.

4. Also check harness for short to ground and short to power.

OK or NG

OK >> GO TO 4.
NG >> Repair open circuit or short to ground or short to power in harness or connectors.

4. CHECK INTAKE AIR TEMPERATURE SENSOR

Refer to EC-186, "Component Inspection".

OK or NG

OK >> GO TO 5.
NG >> Replace mass air flow sensor (with intake air temperature sensor).

5. CHECK INTERMITTENT INCIDENT

Refer to EC-136.

>> **INSPECTION END**

Component Inspection

INFOID:0000000001702670

INTAKE AIR TEMPERATURE SENSOR

1. Check resistance between mass air flow sensor (1) terminals 5 and 6 under the following conditions.

Intake air temperature °C (°F)	Resistance kΩ
25 (77)	1.800 - 2.200

2. If NG, replace mass air flow sensor (with intake air temperature sensor).

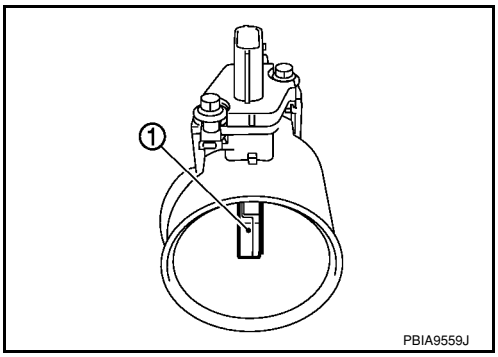

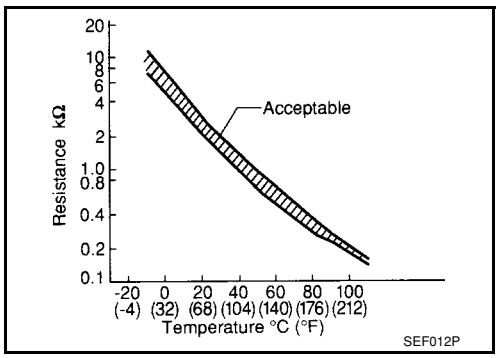

Removal and Installation

INFOID:0000000001702671

MASS AIR FLOW SENSOR

Refer to EM-16.

DTC P0117, P0118 ECT SENSOR

Component Description

INFOID:0000000001702672

The engine coolant temperature sensor is used to detect the engine coolant temperature. The sensor modifies a voltage signal from the ECM. The modified signal returns to the ECM as the engine coolant temperature input. The sensor uses a thermistor which is sensitive to the change in temperature. The electrical resistance of the thermistor decreases as temperature increases.

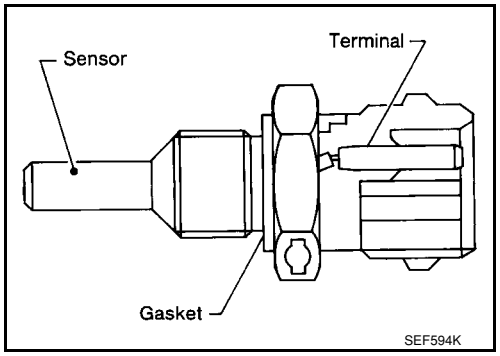

<Reference data>

Engine coolant temperature °C (°F)	Voltage* V	Resistance kΩ
–10 (14)	4.4	7.0 - 11.4
20 (68)	3.5	2.1 - 2.9
50 (122)	2.2	0.68 - 1.00
90 (194)	0.9	0.236 - 0.260

*: This data is reference value and is measured between ECM terminal 38 (Engine coolant temperature sensor) and ground.

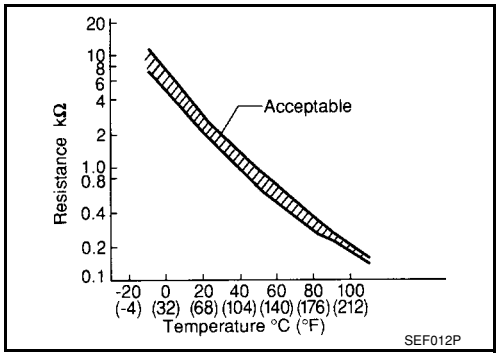

CAUTION:

Do not use ECM ground terminals when measuring input/output voltage. Doing so may result in damage to the ECM's transistor. Use a ground other than ECM terminals, such as the ground.

On Board Diagnosis Logic

INFOID:0000000001702673

These self-diagnoses have the one trip detection logic.

DTC No.	Trouble Diagnosis Name	DTC Detecting Condition	Possible Cause
P0117 0117	Engine coolant temperature sensor circuit low input	An excessively low voltage from the sensor is sent to ECM.	• Harness or connectors (Engine coolant temperature sensor circuit is open or shorted.) • Engine coolant temperature sensor
P0118 0118	Engine coolant temperature sensor circuit high input	An excessively high voltage from the sensor is sent to ECM.	

FAIL-SAFE MODE

When the malfunction is detected, the ECM enters fail-safe mode and the MIL lights up.

Detected items	Engine operating condition in fail-safe mode	
Engine coolant temperature sensor circuit	Engine coolant temperature will be determined by ECM based on the time after turning ignition switch ON or START. CONSULT-II displays the engine coolant temperature decided by ECM.	
	Condition	Engine coolant temperature decided (CONSULT-II display)
	Just as ignition switch is turned ON or START	40°C (104°F)
	More than approx. 4 minutes after ignition ON or START	80°C (176°F)
	Except as shown above	40 - 80°C (104 - 176°F) (Depends on the time)
	When the fail-safe system for engine coolant temperature sensor is activated, the cooling fan operates while engine is running.	

DTC Confirmation Procedure

INFOID:0000000001702674

NOTE:
If DTC Confirmation Procedure has been previously conducted, always turn ignition switch OFF and wait at least 10 seconds before conducting the next test.

WITH CONSULT-II

1. Turn ignition switch ON.
2. Select “DATA MONITOR” mode with CONSULT-II.
3. Wait at least 5 seconds.
4. If DTC is detected, go to EC-189, "Diagnosis Procedure".

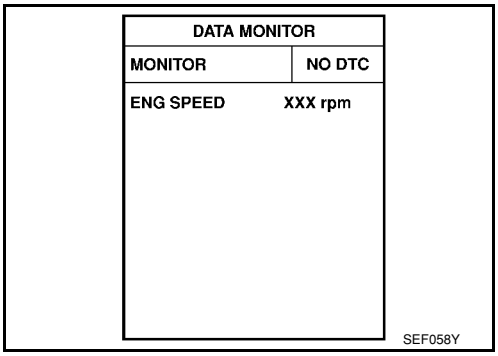

WITH GST

Follow the procedure “WITH CONSULT-II” above.

Wiring Diagram

INFOID:0000000001702675

EC-ECTS-01

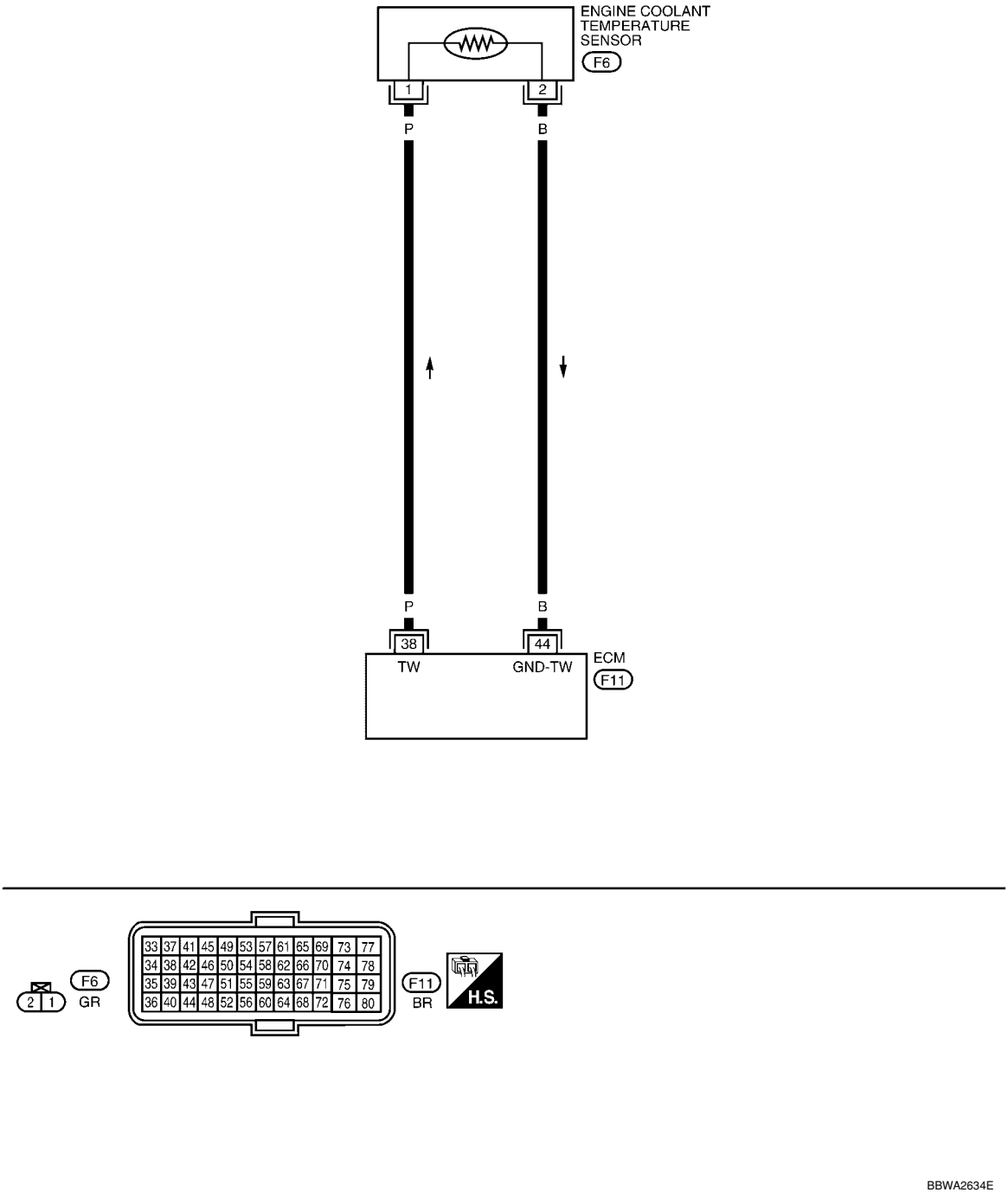

Diagnosis Procedure

INFOID:0000000001702676

1. CHECK GROUND CONNECTIONS

1. Turn ignition switch OFF.
2. Loosen and retighten ground screw on the body.
   Refer to EC-142, "Ground Inspection".

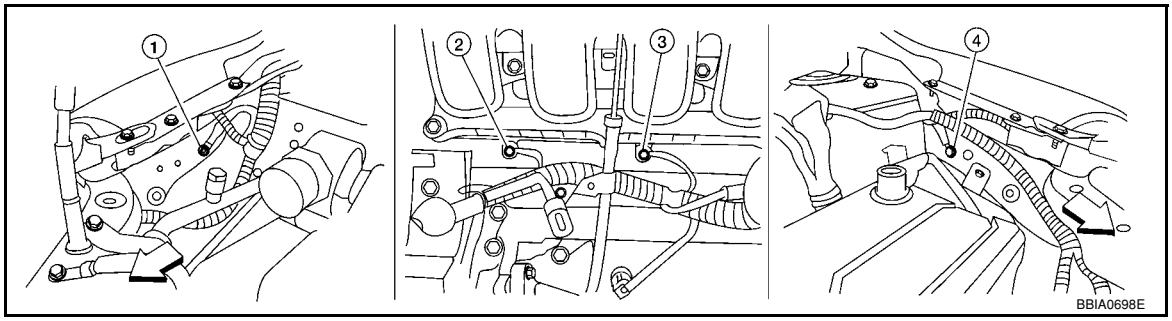

⇦: Vehicle front

1. Body ground E24
2. Engine ground F9
3. Engine ground F16
4. Body ground E15

OK or NG

OK >> GO TO 2.
NG >> Repair or replace ground connections.

2. CHECK ECT SENSOR POWER SUPPLY CIRCUIT

1. Disconnect engine coolant temperature (ECT) sensor (1) harness connector.
- ⇦: Vehicle front
2. Turn ignition switch ON.

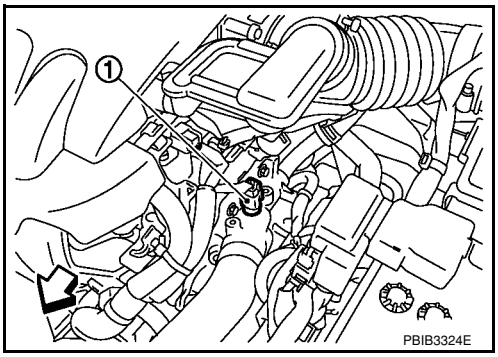

3. Check voltage between ECT sensor terminal 1 and ground with CONSULT-II or tester.

Voltage: Approximately 5V

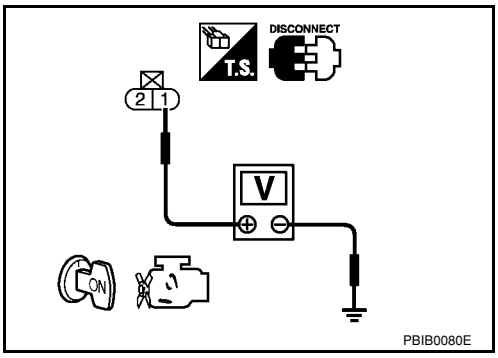

OK or NG

OK >> GO TO 3.
NG >> Repair open circuit or short to ground or short to power in harness or connectors.

3. CHECK ECT SENSOR GROUND CIRCUIT FOR OPEN AND SHORT

1. Turn ignition switch OFF.
2. Disconnect ECM harness connector.
3. Check harness continuity between ECM terminal 44 and ECT sensor terminal 2. Refer to Wiring Diagram.

Continuity should exist.

4. Also check harness for short to ground and short to power.

OK or NG

OK >> GO TO 4.
NG >> Repair open circuit or short to ground or short to power in harness or connectors.

4. CHECK ENGINE COOLANT TEMPERATURE SENSOR

Refer to EC-191, "Component Inspection".

OK or NG

OK >> GO TO 5.
NG >> Replace engine coolant temperature sensor.

5. CHECK INTERMITTENT INCIDENT

Refer to EC-136.

>> **INSPECTION END**

Component Inspection

INFOID:0000000001702677

ENGINE COOLANT TEMPERATURE SENSOR

1. Check resistance between engine coolant temperature sensor terminals 1 and 2 as shown in the figure.

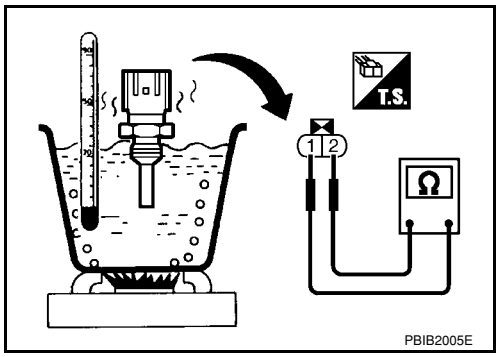

<Reference data>

Temperature °C (°F)	Resistance kΩ
20 (68)	2.1 - 2.9
50 (122)	0.68 - 1.00
90 (194)	0.236 - 0.260

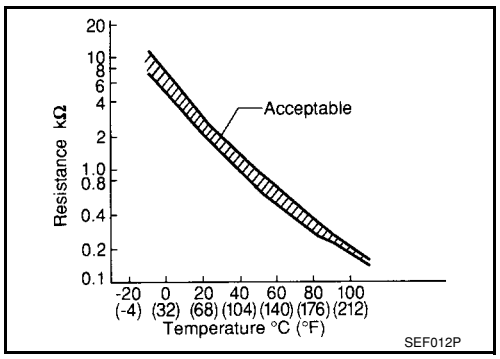

2. If NG, replace engine coolant temperature sensor.

Removal and Installation

INFOID:0000000001702678

ENGINE COOLANT TEMPERATURE SENSOR

Refer to EM-62.

DTC P0122, P0123 TP SENSOR

Component Description

INFOID:0000000001702679

Electric throttle control actuator consists of throttle control motor, throttle position sensor, etc. The throttle position sensor responds to the throttle valve movement.
The throttle position sensor has two sensors. These sensors are a kind of potentiometers which transform the throttle valve position into output voltage, and emit the voltage signal to the ECM. In addition, these sensors detect the opening and closing speed of the throttle valve and feed the voltage signals to the ECM. The ECM judges the current opening angle of the throttle valve from these signals and the ECM controls the throttle control motor to make the throttle valve opening angle properly in response to driving condition.

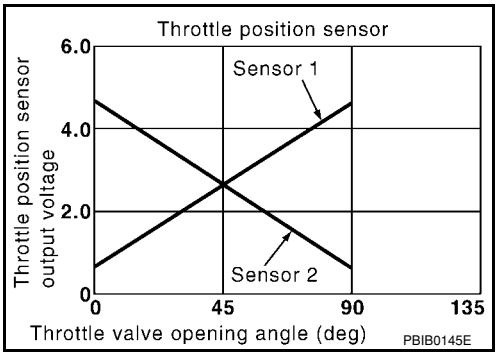

CONSULT-II Reference Value in Data Monitor Mode

INFOID:0000000001702680

Specification data are reference values.

MONITOR ITEM	CONDITION		SPECIFICATION
THRTL SEN 1 THRTL SEN 2*	• Ignition switch: ON (Engine stopped) • Shift lever: D (A/T, CVT), 1st (M/T)	Accelerator pedal: Fully released	More than 0.36V
		Accelerator pedal: Fully depressed	Less than 4.75V

*: Throttle position sensor 2 signal is converted by ECM internally. Thus, it differs from ECM terminal voltage signal.

On Board Diagnosis Logic

INFOID:0000000001702681

These self-diagnoses have the one trip detection logic.
NOTE:
If DTC P0122 or P0123 is displayed with DTC P0643, first perform the trouble diagnosis for DTC P0643. Refer to EC-400.

DTC No.	Trouble diagnosis name	DTC detecting condition	Possible cause
P0122 0122	Throttle position sensor 2 circuit low input	An excessively low voltage from the TP sensor 2 is sent to ECM.	• Harness or connectors (TP sensor 2 circuit is open or shorted.) • Electric throttle control actuator (TP sensor 2)
P0123 0123	Throttle position sensor 2 circuit high input	An excessively high voltage from the TP sensor 2 is sent to ECM.	

FAIL-SAFE MODE

When the malfunction is detected, ECM enters fail-safe mode and the MIL lights up.

Engine operation condition in fail-safe mode
The ECM controls the electric throttle control actuator in regulating the throttle opening in order for the idle position to be within +10 degrees. The ECM regulates the opening speed of the throttle valve to be slower than the normal condition. So, the acceleration will be poor.

DTC Confirmation Procedure

INFOID:0000000001702682

NOTE:
If DTC Confirmation Procedure has been previously conducted, always turn ignition switch OFF and wait at least 10 seconds before conducting the next test.
TESTING CONDITION:
Before performing the following procedure, confirm that battery voltage is more than 8V at idle.

WITH CONSULT-II

1. Turn ignition switch ON.

2. Select “DATA MONITOR” mode with CONSULT-II.
3. Start engine and let it idle for 1 second.
4. If DTC is detected, go to EC-195, "Diagnosis Procedure".

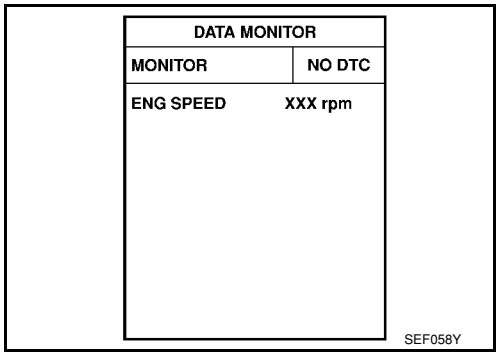

WITH GST

Follow the procedure “WITH CONSULT-II” above.

Wiring Diagram

INFOID:0000000001702683

EC-TPS2-01

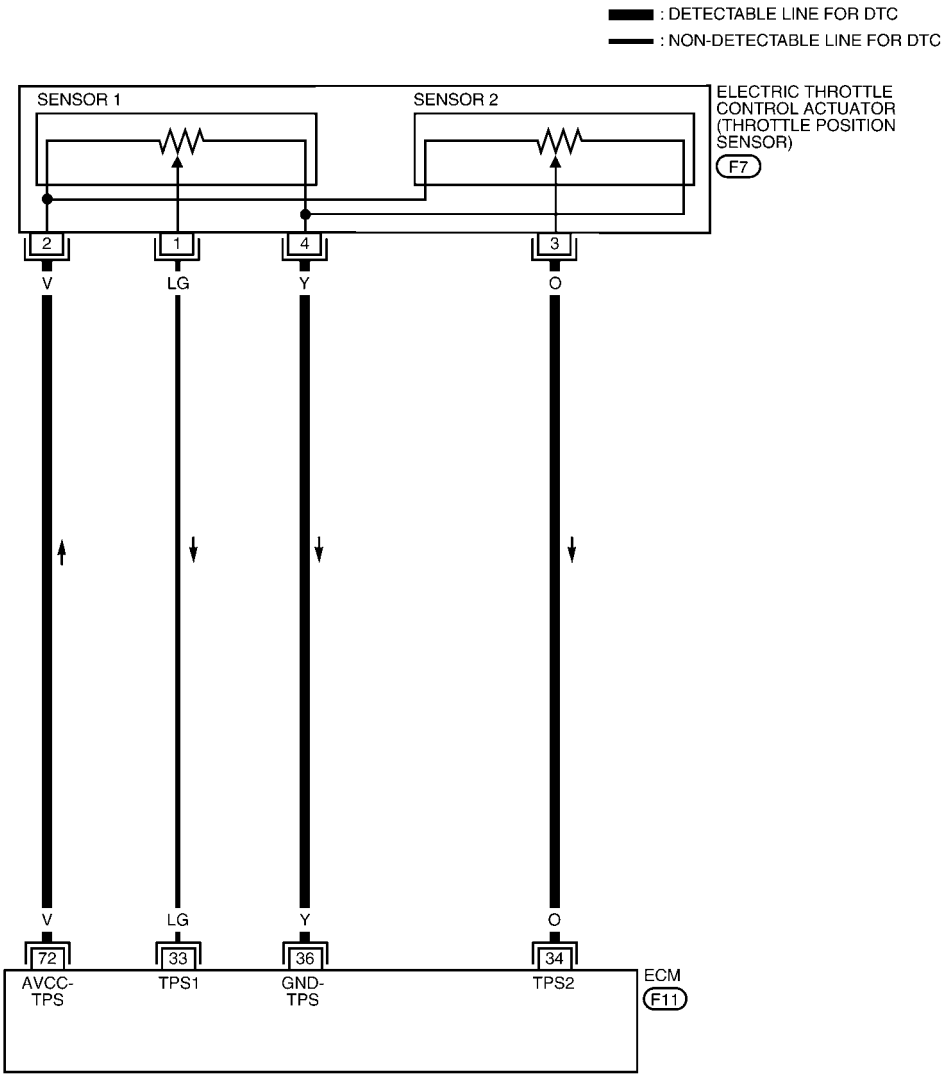

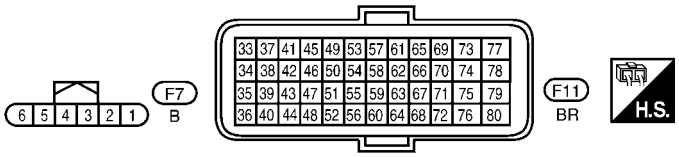

BBWA2656E

Specification data are reference values and are measured between each terminal and ground.

CAUTION:

Do not use ECM ground terminals when measuring input/output voltage. Doing so may result in damage to the ECM's transistor. Use a ground other than ECM terminals, such as the ground.

TERMINAL NO.	WIRE COLOR	ITEM	CONDITION	DATA (DC Voltage)
33	LG	Throttle position sensor 1	**[Ignition switch: ON]** • Engine stopped • Shift lever: D (A/T, CVT), 1st (M/T) • Accelerator pedal: Fully released	More than 0.36V
			[Ignition switch: ON] • Engine stopped • Shift lever: D (A/T, CVT), 1st (M/T) • Accelerator pedal: Fully depressed	Less than 4.75V
34	O	Throttle position sensor 2	**[Ignition switch: ON]** • Engine stopped • Shift lever: D (A/T, CVT), 1st (M/T) • Accelerator pedal: Fully released	Less than 4.75V
			[Ignition switch: ON] • Engine stopped • Shift lever: D (A/T, CVT), 1st (M/T) • Accelerator pedal: Fully depressed	More than 0.36V
36	Y	Sensor ground (Throttle position sensor)	**[Engine is running]** • **Warm-up condition** • Idle speed	Approximately 0V
72	V	Sensor power supply (Throttle position sensor)	**[Ignition switch: ON]**	Approximately 5V

Diagnosis Procedure

INFOID:0000000001702684

1. CHECK GROUND CONNECTIONS

1. Turn ignition switch OFF.
2. Loosen and retighten ground screw on the body.
   Refer to EC-142, "Ground Inspection".

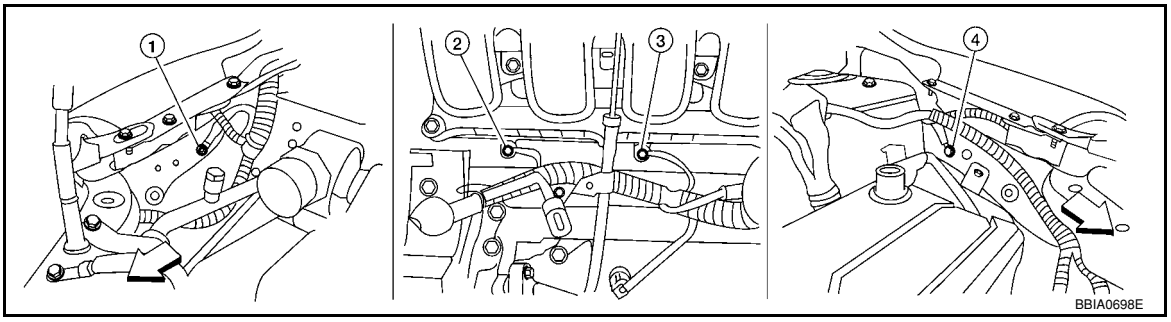

⇦: Vehicle front

1. Body ground E24
2. Engine ground F9
3. Engine ground E16
4. Body ground E15

OK or NG

OK >> GO TO 2.
NG >> Repair or replace ground connections.

2. CHECK THROTTLE POSITION SENSOR 2 POWER SUPPLY CIRCUIT

1. Disconnect electric throttle control actuator (1) harness connector.
- ⇦: Vehicle front
2. Turn ignition switch ON.

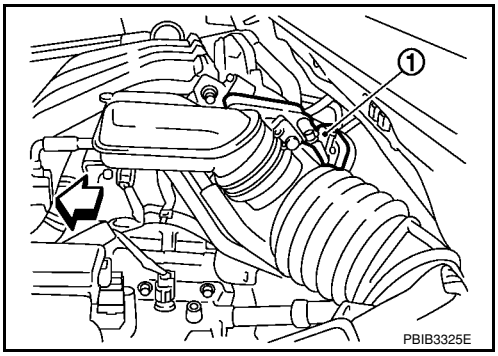

3. Check voltage between electric throttle control actuator terminal 2 and ground with CONSULT-II or tester.

Voltage: Approximately 5V

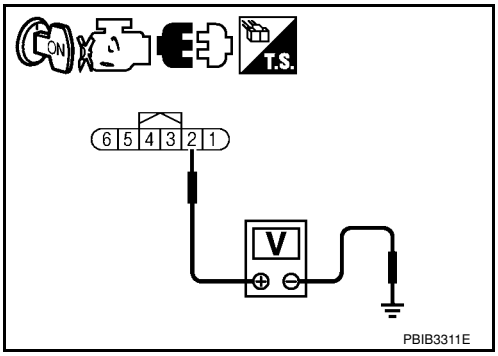

OK or NG

OK >> GO TO 3.
NG >> Repair open circuit or short to ground or short to power in harness or connectors.

3. CHECK THROTTLE POSITION SENSOR 2 GROUND CIRCUIT FOR OPEN AND SHORT

1. Turn ignition switch OFF.
2. Disconnect ECM harness connector.
3. Check harness continuity between electric throttle control actuator terminal 4 and ECM terminal 36. Refer to Wiring Diagram.

Continuity should exist.

4. Also check harness for short to ground and short to power.

OK or NG

OK >> GO TO 4.
NG >> Repair open circuit or short to ground or short to power in harness or connectors.

4. CHECK THROTTLE POSITION SENSOR 2 INPUT SIGNAL CIRCUIT FOR OPEN AND SHORT

1. Check harness continuity between ECM terminal 34 and electric throttle control actuator terminal 3. Refer to Wiring Diagram.

Continuity should exist.

2. Also check harness for short to ground and short to power.

OK or NG

OK >> GO TO 5.
NG >> Repair open circuit or short to ground or short to power in harness or connectors.

5. CHECK THROTTLE POSITION SENSOR

Refer to EC-197, "Component Inspection".

OK or NG

OK >> GO TO 7.
NG >> GO TO 6.

6. REPLACE ELECTRIC THROTTLE CONTROL ACTUATOR

1. Replace the electric throttle control actuator.
2. Perform EC-76, "Throttle Valve Closed Position Learning".
3. Perform EC-76, "Idle Air Volume Learning".

>> **INSPECTION END**

7. CHECK INTERMITTENT INCIDENT

Refer to EC-136.

>> **INSPECTION END**

Component Inspection

INFOID:0000000001702685

THROTTLE POSITION SENSOR

1. Reconnect all harness connectors disconnected.
2. Perform EC-76, "Throttle Valve Closed Position Learning".
3. Turn ignition switch ON.
4. Set shift lever to D position (A/T, CVT) or 1st position (M/T).
5. Check voltage between ECM terminals 33 (TP sensor 1 signal), 34 (TP sensor 2 signal) and ground under the following conditions.

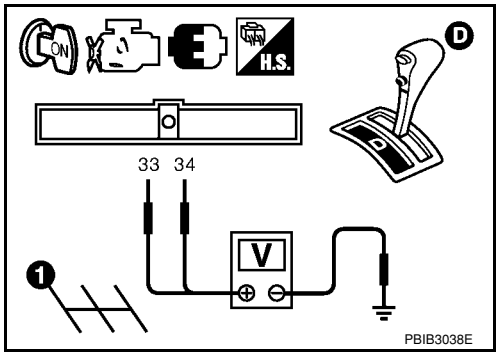

Terminal	Accelerator pedal	Voltage
33 (Throttle position sensor 1)	Fully released	More than 0.36V
	Fully depressed	Less than 4.75V
34 (Throttle position sensor 2)	Fully released	Less than 4.75V
	Fully depressed	More than 0.36V

6. If NG, replace electric throttle control actuator and go to the next step.
7. Perform EC-76, "Throttle Valve Closed Position Learning".
8. Perform EC-76, "Idle Air Volume Learning".

Removal and Installation

INFOID:0000000001702686

ELECTRIC THROTTLE CONTROL ACTUATOR

Refer to EM-18.

DTC P0125 ECT SENSOR

Description

INFOID:0000000001702687

NOTE:
If DTC P0125 is displayed with P0117 or P0118, first perform the trouble diagnosis for DTC P0117 or P0118. Refer to EC-187.

COMPONENT DESCRIPTION

The engine coolant temperature sensor is used to detect the engine coolant temperature. The sensor modifies a voltage signal from the ECM. The modified signal returns to the ECM as the engine coolant temperature input. The sensor uses a thermistor which is sensitive to the change in temperature. The electrical resistance of the thermistor decreases as temperature increases.

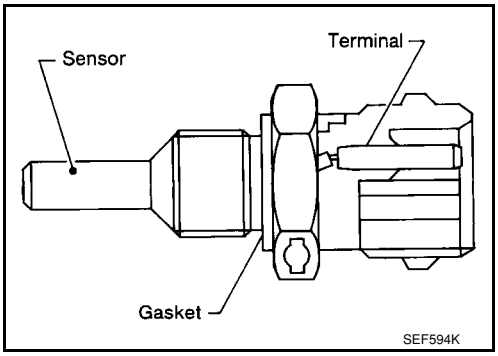

<Reference data>

Engine coolant temperature °C (°F)	Voltage* V	Resistance kΩ
–10 (14)	4.4	7.0 - 11.4
20 (68)	3.5	2.1 - 2.9
50 (122)	2.2	0.68 - 1.00
90 (194)	0.9	0.236 - 0.260

*: This data is reference values and is measured between ECM terminal 38 (Engine coolant temperature sensor) and ground.

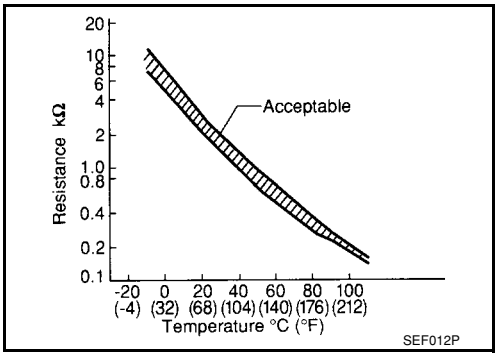

CAUTION:
Do not use ECM ground terminals when measuring input/output voltage. Doing so may result in damage to the ECM's transistor. Use a ground other than ECM terminals, such as the ground.

On Board Diagnosis Logic

INFOID:0000000001702688

This self-diagnosis ha one trip detection logic.

DTC No.	Trouble diagnosis name	DTC detecting condition	Possible cause
P0125 0125	Insufficient engine coolant temperature for closed loop fuel control	• Voltage sent to ECM from the sensor is not practical, even when some time has passed after starting the engine. • Engine coolant temperature is insufficient for closed loop fuel control.	• Harness or connectors (High resistance in the circuit) • Engine coolant temperature sensor • Thermostat

DTC Confirmation Procedure

INFOID:0000000001702689

CAUTION:
Be careful not to overheat engine.
NOTE:
If DTC Confirmation Procedure has been previously conducted, always turn ignition switch OFF and wait at least 10 seconds before conducting the next test.

WITH CONSULT-II

1. Turn ignition switch ON.

2. Select “DATA MONITOR” mode with CONSULT-II.
3. Check that “COOLAN TEMP/S” is above 10°C (50°F).
   If it is above 10°C (50°F), the test result will be OK.
   If it is below 10°C (50°F), go to following step.
4. Start engine and run it for 65 minutes at idle speed.
   If “COOLAN TEMP/S” increases to more than 10°C (50°F) within 65 minutes, stop engine because the test result will be OK.
5. If DTC is detected, go to EC-199, "Diagnosis Procedure".

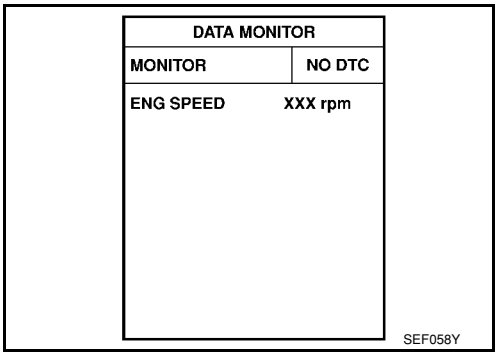

WITH GST

Follow the procedure “WITH CONSULT-II” above.

Diagnosis Procedure

INFOID:0000000001702690

1. CHECK GROUND CONNECTIONS

1. Turn ignition switch OFF.
2. Loosen and retighten ground screw on the body.
   Refer to EC-142, "Ground Inspection".

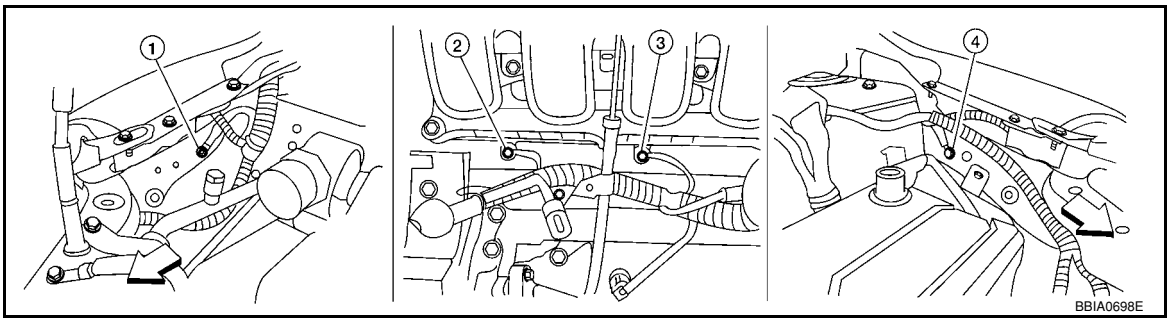

⇦: Vehicle front

1. Body ground E24
2. Engine ground F9
3. Engine ground F16
4. Body ground E15

OK or NG

OK >> GO TO 2.
NG >> Repair or replace ground connections.

2. CHECK ENGINE COOLANT TEMPERATURE SENSOR

Refer to EC-200, "Component Inspection".

OK or NG

OK >> GO TO 3.
NG >> Replace engine coolant temperature sensor.

3. CHECK THERMOSTAT OPERATION

When the engine is cold [lower than 70°C (158°F)] condition, grasp lower radiator hose and confirm the engine coolant does not flow.

OK or NG

OK >> GO TO 4.
NG >> Repair or replace thermostat. Refer to CO-17.

4. CHECK INTERMITTENT INCIDENT

Refer to EC-136.
Refer to EC-189, "Wiring Diagram".

>> **INSPECTION END**

Component Inspection

INFOID:0000000001702691

ENGINE COOLANT TEMPERATURE SENSOR

1. Check resistance between engine coolant temperature sensor terminals 1 and 2 as shown in the figure.

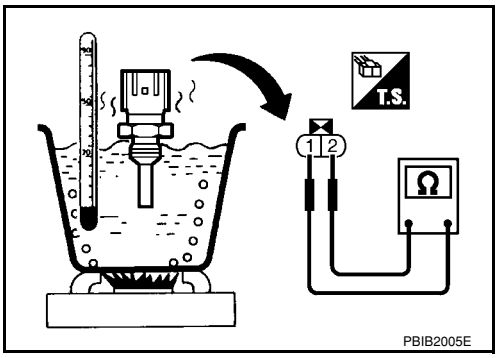

<Reference data>

Engine coolant temperature °C (°F)	Resistance kΩ
20 (68)	2.1 - 2.9
50 (122)	0.68 - 1.00
90 (194)	0.236 - 0.260

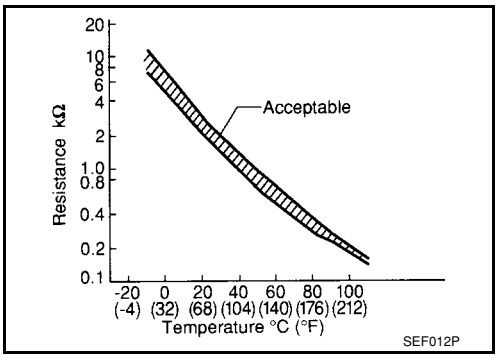

2. If NG, replace engine coolant temperature sensor.

Removal and Installation

INFOID:0000000001702692

ENGINE COOLANT TEMPERATURE SENSOR

Refer to CO-17.

DTC P0127 IAT SENSOR

Component Description

INFOID:0000000001702693

The intake air temperature sensor is built into mass air flow sensor (1). The sensor detects intake air temperature and transmits a signal to the ECM.
The temperature sensing unit uses a thermistor which is sensitive to the change in temperature. Electrical resistance of the thermistor decreases in response to the temperature rise.

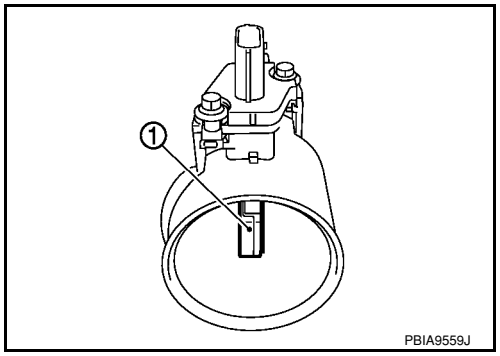

<Reference data>

Intake air temperature °C (°F)	Voltage* V	Resistance K.Ω
25 (77)	3.3	1.800 - 2.200
80 (176)	1.2	0.283 - 0.359

*: This data is reference value and is measured between ECM terminal 46 (Intake air temperature sensor) and ground.

CAUTION:
Do not use ECM ground terminals when measuring input/output voltage. Doing so may result in damage to the ECM's transistor. Use a ground other than ECM terminals, such as the ground.

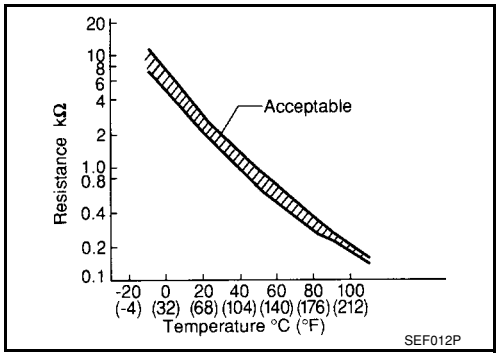

On Board Diagnosis Logic

INFOID:0000000001702694

DTC No.	Trouble diagnosis name	DTC detecting condition	Possible cause
P0127 0127	Intake air temperature too high	Rationally incorrect voltage from the sensor is sent to ECM, compared with the voltage signal from engine coolant temperature sensor.	• Harness or connectors (Intake temperature sensor circuit is open or shorted) • Intake air temperature sensor

DTC Confirmation Procedure

INFOID:0000000001702695

CAUTION:
Always drive vehicle at a safe speed.
NOTE:
If DTC Confirmation Procedure has been previously conducted, always turn ignition switch OFF and wait at least 10 seconds before conducting the next test.
TESTING CONDITION:
This test may be conducted with the drive wheels lifted in the shop or by driving the vehicle. If a road test is expected to be easier, it is unnecessary to lift the vehicle.

WITH CONSULT-II

1. Wait until engine coolant temperature is less than 90°C (194°F)

a. Turn ignition switch ON.

b. Select “DATA MONITOR” mode with CONSULT-II.
c. Check the engine coolant temperature.
d. If the engine coolant temperature is not less than 90°C (194°F), turn ignition switch OFF and cool down engine.
   - Perform the following steps before engine coolant temperature is above 90°C (194°F).
2. Turn ignition switch ON.
3. Select “DATA MONITOR” mode with CONSULT-II.
4. Start engine.
5. Hold vehicle speed at more than 70 km/h (43 MPH) for 100 consecutive seconds.
6. If 1st trip DTC is detected, go to EC-202, "Diagnosis Procedure".

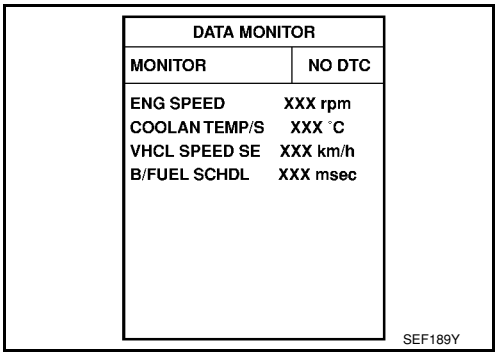

WITH GST
Follow the procedure “With CONSULT-II” above.

Diagnosis Procedure

INFOID:0000000001702696

1. CHECK GROUND CONNECTIONS

1. Turn ignition switch OFF.
2. Loosen and retighten ground screw on the body.
   Refer to EC-142, "Ground Inspection".

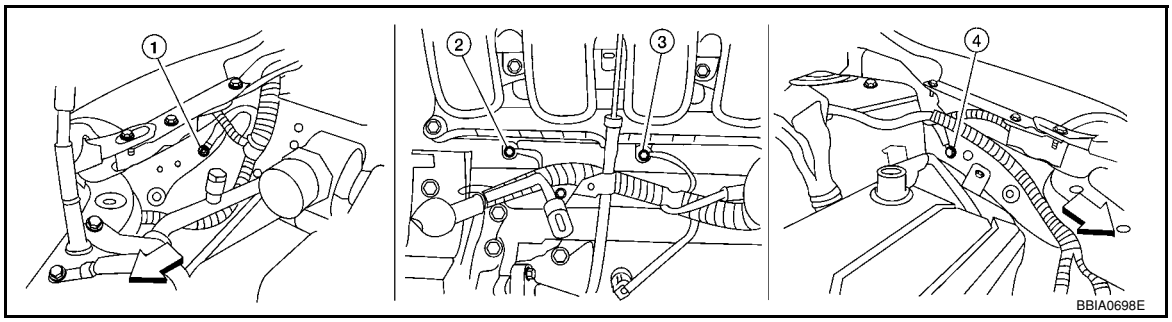

⇦: Vehicle front

1. Body ground E24
2. Engine ground F9
3. Engine ground F16
4. Body ground E15

OK or NG

OK >> GO TO 2.
NG >> Repair or replace ground connections.

2. CHECK INTAKE AIR TEMPERATURE SENSOR

Refer to EC-202, "Component Inspection".

OK or NG

OK >> GO TO 3.
NG >> Replace mass air flow sensor (with intake air temperature sensor).

3. CHECK INTERMITTENT INCIDENT

Refer to EC-136.
Refer to EC-184, "Wiring Diagram".

>> **INSPECTION END**

Component Inspection

INFOID:0000000001702697

INTAKE AIR TEMPERATURE SENSOR

1. Check resistance between intake air temperature sensor (1) terminals 5 and 6 under the following conditions.

Intake air temperature °C (°F)	Resistance kΩ
25 (77)	1.800 - 2.200

2. If NG, replace mass air flow sensor (with intake air temperature sensor).

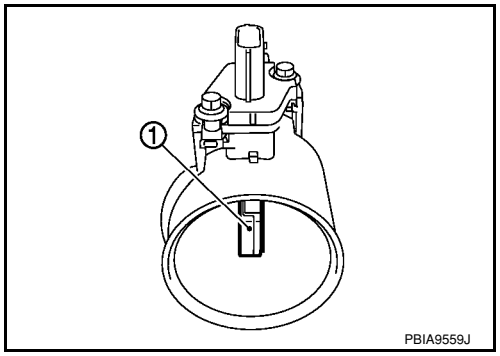

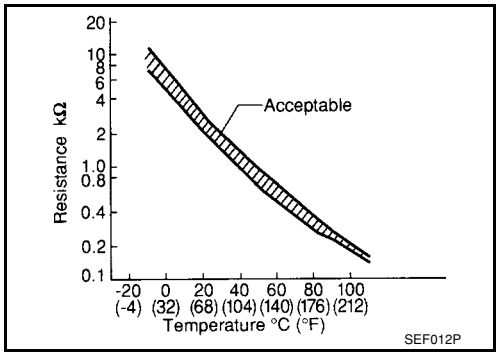

Removal and Installation

INFOID:0000000001702698

MASS AIR FLOW SENSOR

Refer to EM-16.

DTC P0128 THERMOSTAT FUNCTION

On Board Diagnosis Logic

INFOID:0000000001702699

Engine coolant temperature has not risen enough to open the thermostat even though the engine has run long enough. This is due to a leak in the seal or the thermostat stuck open.

DTC No.	Trouble diagnosis name	DTC detecting condition	Possible cause
P0128 0128	Thermostat function	The engine coolant temperature does not reach to specified temperature even though the engine has run long enough.	• Thermostat • Leakage from sealing portion of thermostat • Engine coolant temperature sensor

DTC Confirmation Procedure

INFOID:0000000001702700

NOTE:
If DTC Confirmation Procedure has been previously conducted, always turn ignition switch OFF and wait at least 10 seconds before conducting the next test.
TESTING CONDITION:
- **For best results, perform at ambient temperature of –10°C (14°F) or higher.**
- **For best results, perform at engine coolant temperature of –10°C (14°F) to 71°C (160°F).**

WITH CONSULT-II

1. Replace thermostat with new one. Refer to CO-17. Use only a genuine NISSAN thermostat as a replacement. If an incorrect thermostat is used, the MIL may come on.
2. Turn ignition switch ON.
3. Select “COOLAN TEMP/S” in “DATA MONITOR” mode with CONSULT-II.
4. Check that the “COOLAN TEMP/S” is above 71°C (160°F).
   If it is below 71°C (160°F), go to following step.
   If it is above 71°C (160°F), cool down the engine to less than 71°C (160°F), then retry from step 1.
5. Drive vehicle for 10 consecutive minutes under the following conditions.

VHCL SPEED SE	80 - 120 km/h (50 - 75 MPH)

If 1st trip DTC is detected, go to EC-204, "Diagnosis Procedure".

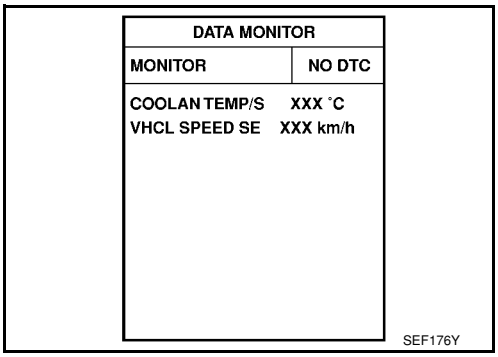

WITH GST

Follow the procedure “WITH CONSULT-II” above.

Diagnosis Procedure

INFOID:0000000001702701

1.CHECK ENGINE COOLANT TEMPERATURE SENSOR

Refer to EC-204, "Component Inspection".

OK or NG

OK >> **INSPECTION END**
NG >> Replace engine coolant temperature sensor.

Component Inspection

INFOID:0000000001702702

ENGINE COOLANT TEMPERATURE SENSOR

1. Check resistance between engine coolant temperature sensor terminals 1 and 2 as shown in the figure.

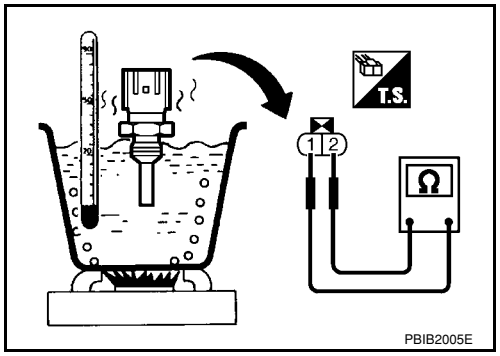

<Reference data>

Engine coolant temperature °C (°F)	Resistance kΩ
20 (68)	2.1 - 2.9
50 (122)	0.68 - 1.00
90 (194)	0.236 - 0.260

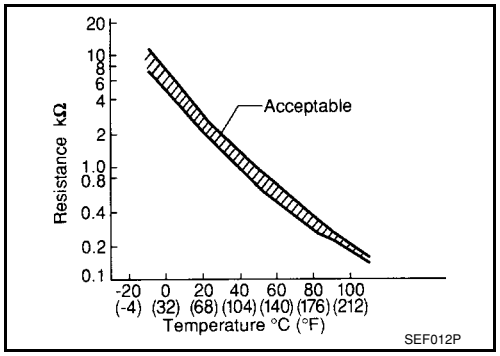

2. If NG, replace engine coolant temperature sensor.

Removal and Installation

INFOID:0000000001702703

ENGINE COOLANT TEMPERATURE SENSOR

Refer to CO-17.

DTC P0130 A/F SENSOR 1

Component Description

INFOID:0000000001702704

The air fuel ratio (A/F) sensor 1 is a planar one-cell limit current sensor. The sensor element of the A/F sensor 1 is composed an electrode layer, which transports ions. It has a heater in the element.
The sensor is capable of precise measurement λ = 1, but also in the lean and rich range. Together with its control electronics, the sensor outputs a clear, continuous signal throughout a wide λ range.
The exhaust gas components diffuse through the diffusion layer at the sensor cell. An electrode layer is applied voltage, and this current relative oxygen density in lean. Also this current relative hydrocarbon density in rich.
Therefore, the A/F sensor 1 is able to indicate air fuel ratio by this electrode layer of current. In addition, a heater is integrated in the sensor to ensure the required operating temperature of about 800°C (1,472°F).

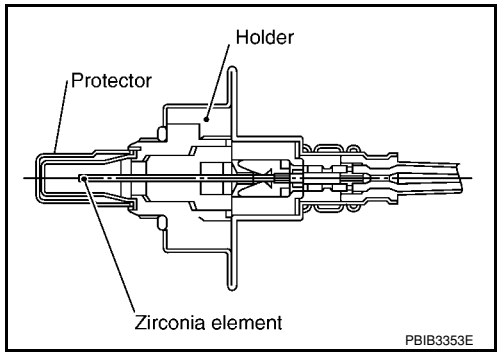

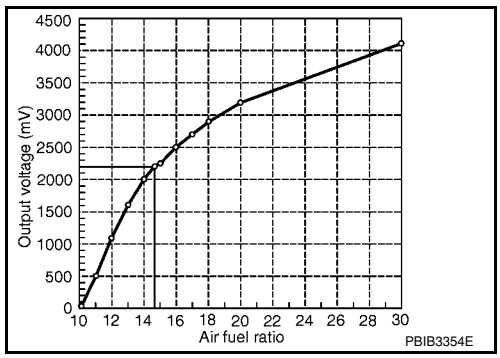

CONSULT-II Reference Value in Data Monitor Mode

INFOID:0000000001702705

Specification data are reference values.

MONITOR ITEM	CONDITION		SPECIFICATION
A/F SEN1 (B1)	• Engine: After warming up	Maintaining engine speed at 2,000 rpm	Fluctuates around 2.2V

On Board Diagnosis Logic

INFOID:0000000001702706

To judge the malfunction, the diagnosis checks that the A/F signal computed by ECM from the air fuel ratio (A/F) sensor 1 signal fluctuates according to fuel feedback control.

DTC No.	Trouble diagnosis name	DTC detecting condition		Possible Cause
P0130 0130 (Bank 1)	Air fuel ratio (A/F) sensor 1 circuit	A)	The A/F signal computed by ECM from the A/F sensor 1 signal is constantly in the range other than approx. 2.2V.	• Harness or connectors [Air fuel ratio (A/F) sensor 1 circuit is open or shorted.] • Air fuel ratio (A/F) sensor 1
P0150 0150 (Bank 2)		B)	The A/F signal computed by ECM from the A/F sensor 1 signal is constantly approx. 2.2V.	

DTC Confirmation Procedure

INFOID:0000000001702707

Perform PROCEDURE FOR MALFUNCTION A first.
If the DTC cannot be confirmed, perform PROCEDURE FOR MALFUNCTION B.
NOTE:
If DTC Confirmation Procedure has been previously conducted, always turn ignition switch OFF and wait at least 10 seconds before conducting the next test.
TESTING CONDITION:
Before performing the following procedure, confirm that battery voltage is more than 11V at idle.

PROCEDURE FOR MALFUNCTION A

With CONSULT-II

1. Start engine and warm it up to normal operating temperature.
2. Select “DATA MONITOR” mode with CONSULT-II.
3. Let engine idle for 2 minutes.
4. If 1st trip DTC is detected, go to EC-210, "Diagnosis Procedure".

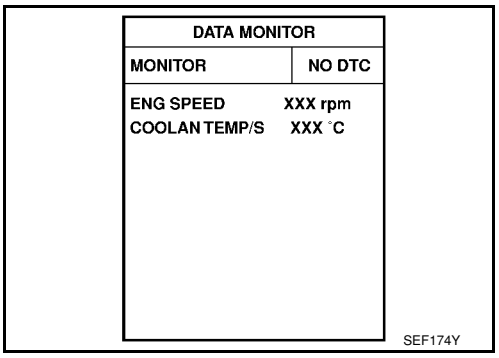

With GST

Follow the procedure “With CONSULT-II” above.

PROCEDURE FOR MALFUNCTION B

CAUTION:

Always drive vehicle at a safe speed.

With CONSULT-II

1. Start engine and warm it up to normal operating temperature.
2. Select “A/F SEN1 (B1)” in “DATA MONITOR” mode with CONSULT-II.
3. Check “A/F SEN1 (B1)” indication.
   If the indication is constantly approx. 2.2V and does not fluctuates, go to EC-210, "Diagnosis Procedure".
   If the indication fluctuates around 2.2V, go to next step.
4. Select “A/F SEN1 (B1) P1276” (for DTC P0130) of “A/F SEN1” in “DTC WORK SUPPORT” mode with CONSULT-II.
5. Touch “START”.
6. When the following conditions are met, “TESTING” will be displayed on the CONSULT-II screen.

ENG SPEED	1,600 - 3,200 rpm
VHCL SPEED SE	More than 64 km/h (40 MPH)
B/FUEL SCHDL	1.0 - 8.0 msec
Shift lever	D position with OD OFF (A/T) D position (CVT) 5th position (M/T)

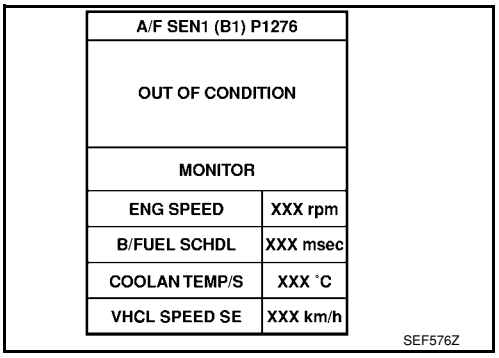

If “TESTING” is not displayed after 20 seconds, retry from step 2.

7. Release accelerator pedal fully.
   NOTE:
   Never apply brake during releasing the accelerator pedal.

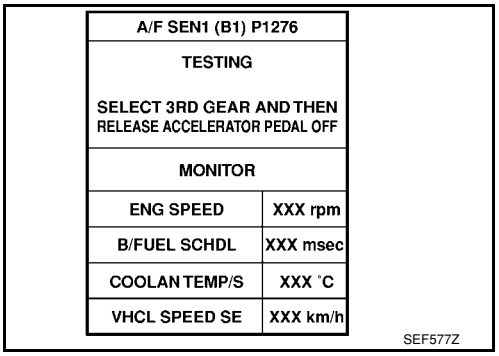

8. Make sure that “TESTING” changes to “COMPLETED”.
   If “TESTING” changed to “OUT OF CONDITION”, retry from step 6.
9. Make sure that “OK” is displayed after touching “SELF-DIAG RESULT”.
   If “NG” is displayed, go to EC-210, "Diagnosis Procedure".

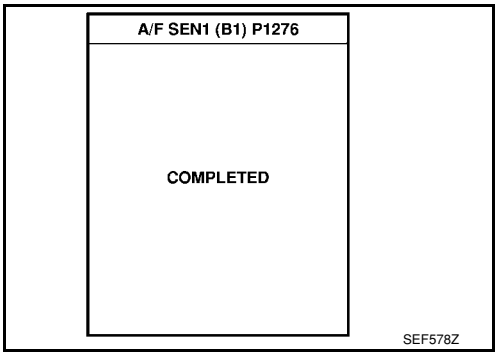

Overall Function Check

INFOID:0000000001702708

PROCEDURE MALFUNCTION B

Use this procedure to check the overall function of the A/F sensor 1 circuit. During this check, a 1st trip DTC might not be confirmed.

With GST

1. Start engine and warm it up to normal operating temperature.
2. Drive the vehicle at a speed of 80 km/h (50 MPH) for a few minutes in the suitable gear position.
3. Set shift lever to D position with OD ON (A/T), D position (CVT) or 5th position (M/T), then release the accelerator pedal fully until the vehicle speed decreases to 50 km/h (30 MPH).
   NOTE:
   Never apply brake during releasing the accelerator pedal.
4. Repeat steps 2 and 3 for five times.
5. Stop the vehicle and turn ignition switch OFF.
6. Wait at least 10 seconds and restart engine.
7. Repeat steps 2 and 3 for five times.
8. Stop the vehicle and connect GST to the vehicle.
9. Make sure that no 1st trip DTC is displayed.
   If the 1st trip DTC is displayed, go to EC-210, "Diagnosis Procedure".

Wiring Diagram

INFOID:0000000001702709

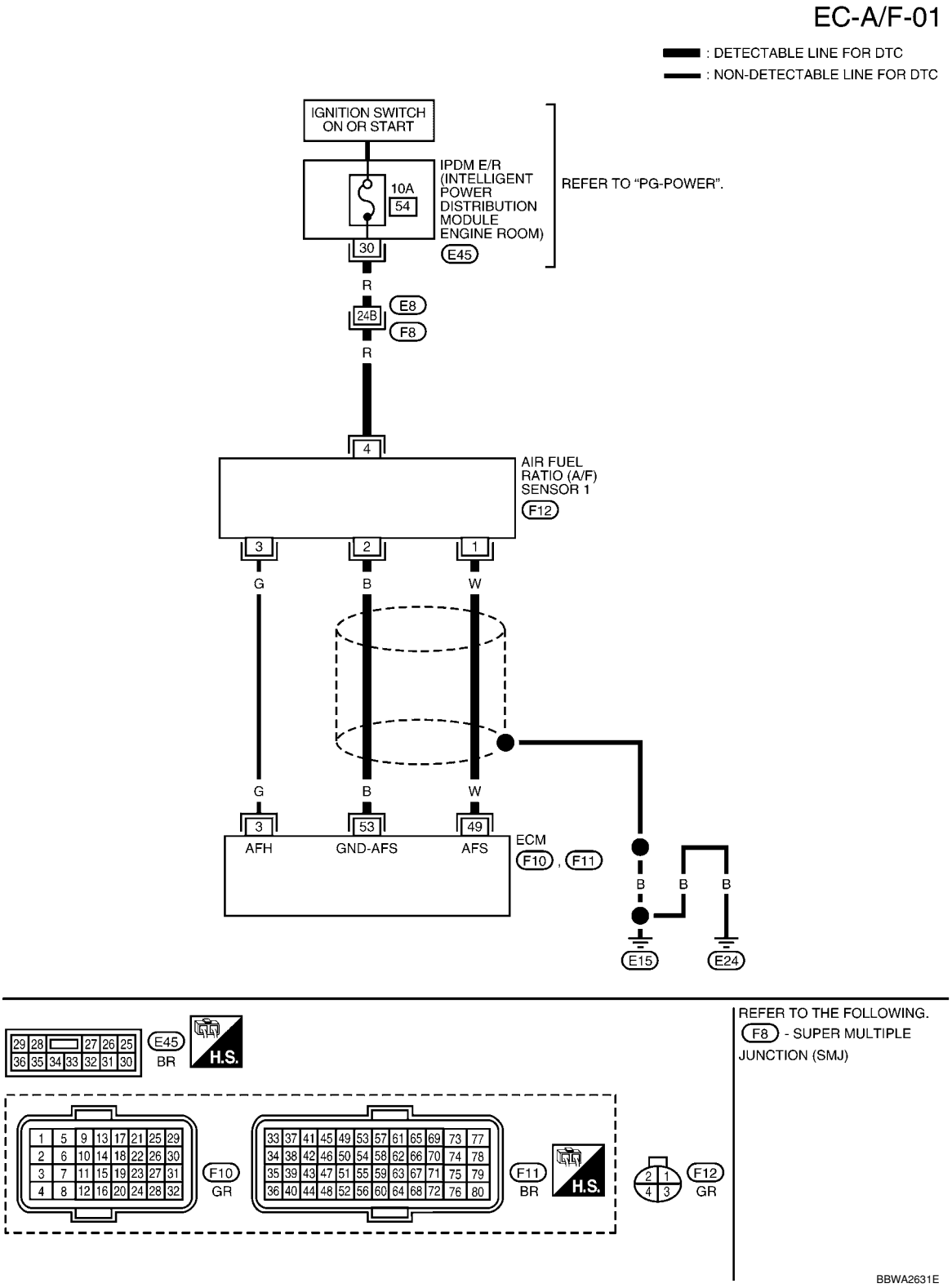

Specification data are reference values and are measured between each terminal and ground.
Pulse signal is measured by CONSULT-II.

CAUTION:

Do not use ECM ground terminals when measuring input/output voltage. Doing so may result in damage to the ECM's transistor. Use a ground other than ECM terminals, such as the ground.

TERMINAL NO.	WIRE COLOR	ITEM	CONDITION	DATA (DC Voltage)
3	G	A/F sensor 1 heater	**[Engine is running]** • **Warm-up condition** • Idle speed (More than 140 seconds after starting engine)	Approximately 2.9 - 8.8V★ 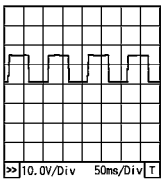 PBIA8148J
49	W	A/F sensor 1	**[Engine is running]** • **Warm-up condition** • Engine speed: 2,000 rpm	Approximately 1.8V Output voltage varies with air fuel ratio.
53	B	A/F sensor 1	**[Ignition switch: ON]**	Approximately 2.2V

★: Average voltage for pulse signal (Actual pulse signal can be confirmed by oscilloscope.)

Diagnosis Procedure

INFOID:0000000001702710

1. CHECK GROUND CONNECTIONS

1. Turn ignition switch OFF.
2. Loosen and retighten ground screw on the body.
   Refer to EC-142, "Ground Inspection".

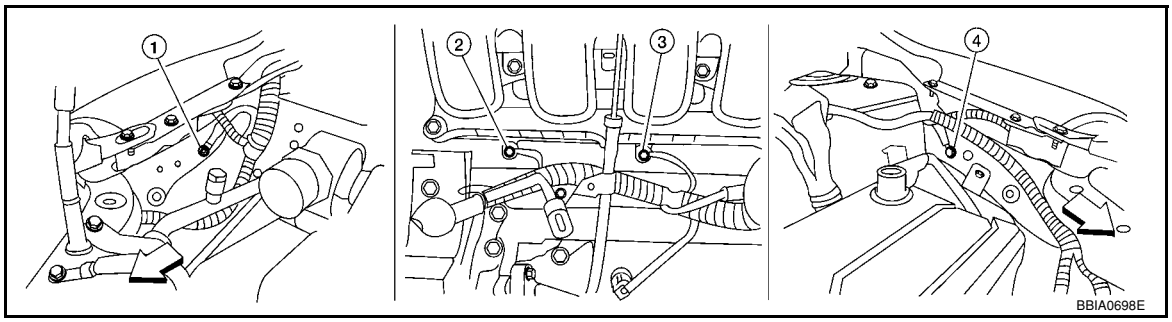

⇦: Vehicle front

1. Body ground E24
2. Engine ground F9
3. Engine ground F16
4. Body ground E15

OK or NG

OK >> GO TO 2.
NG >> Repair or replace ground connections.

2. CHECK AIR FUEL RATIO (A/F) SENSOR 1 POWER SUPPLY CIRCUIT

1. Disconnect A/F sensor 1 harness connector (1).
2. Turn ignition switch ON.

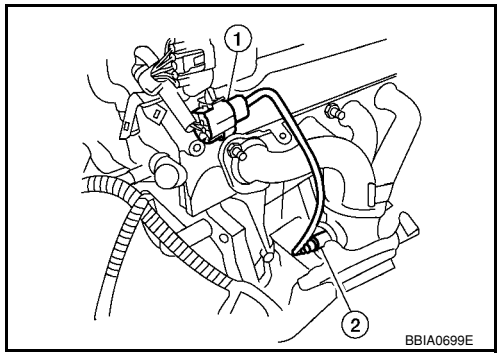

3. Check voltage between A/F sensor 1 terminal 4 and ground with CONSULT-II or tester.

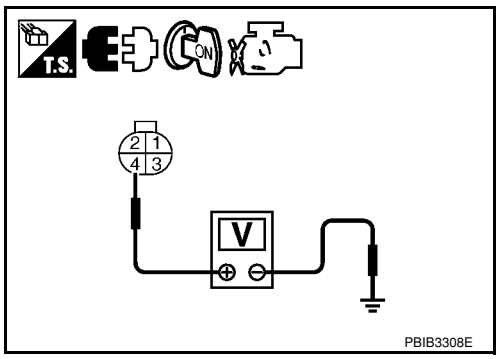

Voltage: Battery voltage

OK or NG

OK >> GO TO 4.
NG >> GO TO 3.

3. DETECT MALFUNCTIONING PART

Check the following.
- Harness connectors E8, F8
- Harness for open or short between A/F sensor 1 and fuse

>> Repair or replace harness or connectors.

4. CHECK A/F SENSOR 1 INPUT SIGNAL CIRCUIT FOR OPEN AND SHORT

1. Turn ignition switch OFF.
2. Disconnect ECM harness connector.
3. Check harness continuity between the following terminals. Refer to Wiring Diagram.

A/F sensor 1 terminal	ECM terminal
1	49
2	53

Continuity should exist.

4. Check harness continuity between ECM terminals 49, 53 or A/F sensor 1 terminals 1, 2 and ground. Refer to Wiring Diagram.

Continuity should not exist.

5. Also check harness for short to power.

OK or NG

OK >> GO TO 5.
NG >> Repair open circuit or short to ground or short to power in harness or connectors.

5. CHECK INTERMITTENT INCIDENT

Perform EC-136.

OK or NG

OK >> GO TO 6.
NG >> Repair or replace.

6. REPLACE AIR FUEL RATIO (A/F) SENSOR 1

Replace air fuel ratio (A/F) sensor 1.

CAUTION:
- **Discard any A/F sensor which has been dropped from a height of more than 0.5 m (19.7 in) onto a hard surface such as a concrete floor; use a new one.**
- **Before installing new A/F sensor, clean exhaust system threads using Oxygen Sensor Thread Cleaner tool J-43897-18 or J-43897-12 and approved anti-seize lubricant.**

>> **INSPECTION END**

Removal and Installation

INFOID:0000000001702711

AIR FUEL RATIO SENSOR

Refer to EM-21.

DTC P0131 A/F SENSOR 1

Component Description

INFOID:0000000001702712

The air fuel ratio (A/F) sensor 1 is a planar one-cell limit current sensor. The sensor element of the A/F sensor 1 is composed an electrode layer, which transports ions. It has a heater in the element.
The sensor is capable of precise measurement λ = 1, but also in the lean and rich range. Together with its control electronics, the sensor outputs a clear, continuous signal throughout a wide λ range.
The exhaust gas components diffuse through the diffusion layer at the sensor cell. An electrode layer is applied voltage, and this current relative oxygen density in lean. Also this current relative hydrocarbon density in rich.
Therefore, the A/F sensor 1 is able to indicate air fuel ratio by this electrode layer of current. In addition, a heater is integrated in the sensor to ensure the required operating temperature of about 800°C (1,472°F).

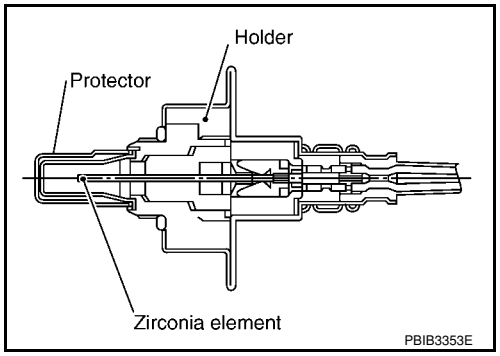

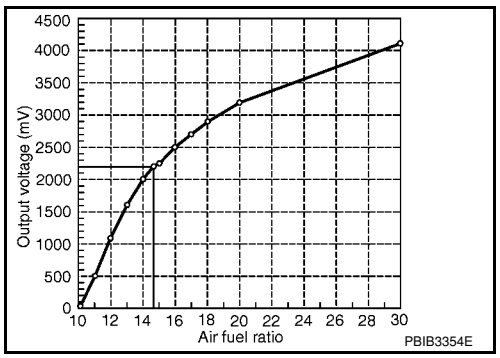

CONSULT-II Reference Value in Data Monitor Mode

INFOID:0000000001702713

Specification data are reference values.

MONITOR ITEM	CONDITION		SPECIFICATION
A/F SEN1 (B1)	• Engine: After warming up	Maintaining engine speed at 2,000 rpm	Fluctuates around 2.2V

On Board Diagnosis Logic

INFOID:0000000001702714

To judge the malfunction, the diagnosis checks that the A/F signal computed by ECM from the air fuel ratio (A/F) sensor 1 signal is not inordinately low.

DTC No.	Trouble diagnosis name	DTC detecting condition	Possible Cause
P0131 0131	Air fuel ratio (A/F) sensor 1 circuit low voltage	The A/F signal computed by ECM from the A/F sensor 1 signal is constantly approx. 0V.	• Harness or connectors [Air fuel ratio (A/F) sensor circuit is open or shorted.] • Air fuel ratio (A/F) sensor 1

DTC Confirmation Procedure

INFOID:0000000001702715

NOTE:
If DTC Confirmation Procedure has been previously conducted, always turn ignition switch OFF and wait at least 10 seconds before conducting the next test.
TESTING CONDITION:
Before performing the following procedure, confirm that battery voltage is more than 11V at idle.

WITH CONSULT-II
1. Start engine and warm it up to normal operating temperature.
2. Select “A/F SEN1 (B1)” in “DATA MONITOR” mode with CONSULT-II.

3. Check “A/F SEN1 (B1)” indication.
   If the indication is constantly approx. 0V, go to EC-216, "Diagnosis Procedure".
   If the indication is not constantly approx. 0V, go to next step.
4. Turn ignition switch OFF, wait at least 10 seconds and then restart engine.
5. Drive and accelerate vehicle to more than 40 km/h (25 MPH) within 20 seconds after restarting engine.
6. Maintain the following conditions for about 20 consecutive seconds.

DATA MONITOR	
MONITOR	NO DTC
ENG SPEED	XXX rpm
COOLAN TEMP/S	XXX ˚C
A/F SEN1 (B1)	XXX V

SEF581Z

ENG SPEED	1,000 - 3,200 rpm
VHCL SPEED SE	More than 40 km/h (25 MPH)
B/FUEL SCHDL	1.5 - 9.0 msec
Shift lever	Suitable position

NOTE:
- **Keep the accelerator pedal as steady as possible during the cruising.**
- **If this procedure is not completed within 1 minute after restarting engine at step 4, return to step 4.**

7. If 1st trip DTC is displayed, go to EC-216, "Diagnosis Procedure".

WITH GST

Follow the procedure “WITH CONSULT-II” above.

Wiring Diagram

INFOID:0000000001702716

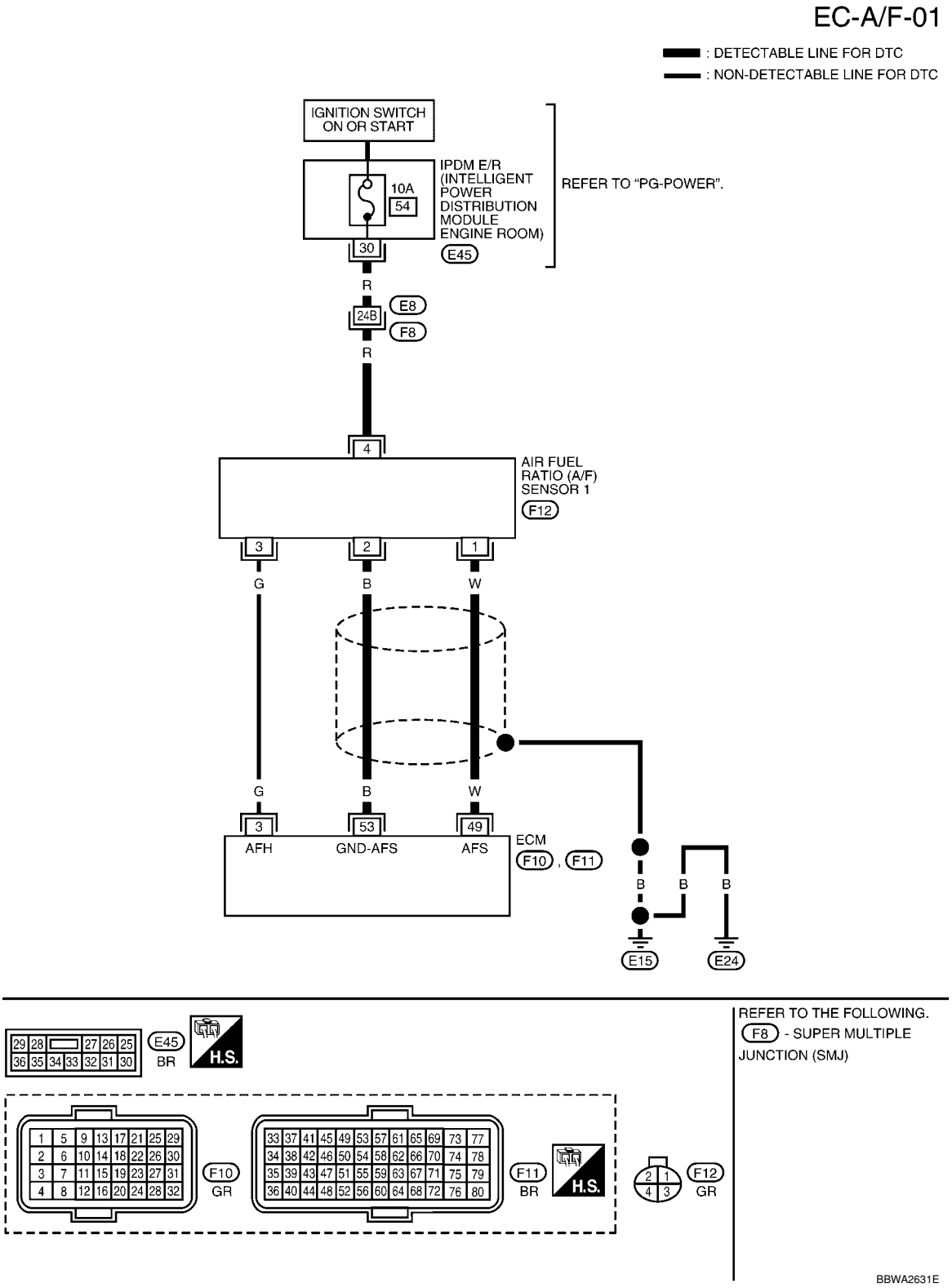

Specification data are reference values and are measured between each terminal and ground.
Pulse signal is measured by CONSULT-II.

CAUTION:

Do not use ECM ground terminals when measuring input/output voltage. Doing so may result in damage to the ECM's transistor. Use a ground other than ECM terminals, such as the ground.

TERMINAL NO.	WIRE COLOR	ITEM	CONDITION	DATA (DC Voltage)
3	G	A/F sensor 1 heater	**[Engine is running]** • **Warm-up condition** • Idle speed (More than 140 seconds after starting engine)	Approximately 2.9 - 8.8V★ 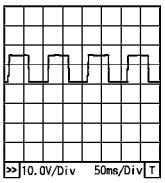 PBIA8148J
49	W	A/F sensor 1	**[Engine is running]** • **Warm-up condition** • Engine speed: 2,000 rpm	Approximately 1.8V Output voltage varies with air fuel ratio.
53	B	A/F sensor 1	**[Ignition switch: ON]**	Approximately 2.2V

★: Average voltage for pulse signal (Actual pulse signal can be confirmed by oscilloscope.)

Diagnosis Procedure

INFOID:0000000001702717

1. CHECK GROUND CONNECTIONS

1. Turn ignition switch OFF.
2. Loosen and retighten ground screw on the body.
   Refer to EC-142, "Ground Inspection".

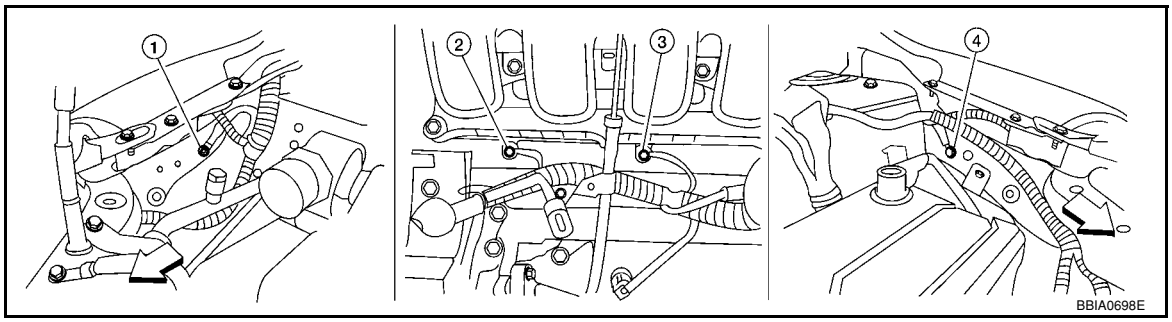

⇦: Vehicle front

1. Body ground E24
2. Engine ground F9
3. Engine ground F16
4. Body ground E15

OK or NG

OK >> GO TO 2.
NG >> Repair or replace ground connections.

2. CHECK AIR FUEL RATIO (A/F) SENSOR 1 POWER SUPPLY CIRCUIT

1. Disconnect A/F sensor 1 harness connector (1).
2. Turn ignition switch ON.

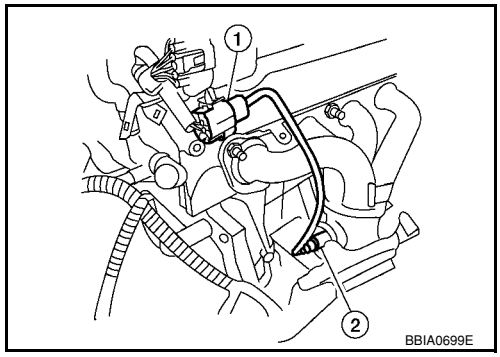

3. Check voltage between A/F sensor 1 terminal 4 and ground with CONSULT-II or tester.

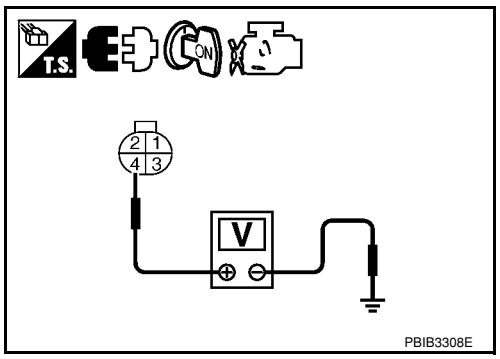

Voltage: Battery voltage

OK or NG

OK >> GO TO 4.
NG >> GO TO 3.

3. DETECT MALFUNCTIONING PART

Check the following.
- Harness connectors E8, F8
- Harness for open or short between A/F sensor 1 and fuse

>> Repair or replace harness or connectors.

4. CHECK A/F SENSOR 1 INPUT SIGNAL CIRCUIT FOR OPEN AND SHORT

1. Turn ignition switch OFF.
2. Disconnect ECM harness connector.
3. Check harness continuity between the following terminals. Refer to Wiring Diagram.

A/F sensor 1 terminal	ECM terminal
1	49
2	53

Continuity should exist.

4. Check harness continuity between ECM terminals 49, 53 or A/F sensor 1 terminals 1, 2 and ground. Refer to Wiring Diagram.

Continuity should not exist.

5. Also check harness for short to power.

OK or NG

OK >> GO TO 5.
NG >> Repair open circuit or short to ground or short to power in harness or connectors.

5. CHECK INTERMITTENT INCIDENT

Perform EC-136.

OK or NG

OK >> GO TO 6.
NG >> Repair or replace.

6. REPLACE AIR FUEL RATIO (A/F) SENSOR 1

Replace air fuel ratio (A/F) sensor 1.

CAUTION:
- **Discard any A/F sensor which has been dropped from a height of more than 0.5 m (19.7 in) onto a hard surface such as a concrete floor; use a new one.**
- **Before installing new A/F sensor, clean exhaust system threads using Oxygen Sensor Thread Cleaner tool J-43897-18 or J-43897-12 and approved anti-seize lubricant.**

>> **INSPECTION END**

Removal and Installation

INFOID:0000000001702718

AIR FUEL RATIO SENSOR

Refer to EM-21.

DTC P0132 A/F SENSOR 1

Component Description

INFOID:0000000001702719

The air fuel ratio (A/F) sensor 1 is a planar one-cell limit current sensor. The sensor element of the A/F sensor 1 is composed an electrode layer, which transports ions. It has a heater in the element.
The sensor is capable of precise measurement $\lambda = 1$, but also in the lean and rich range. Together with its control electronics, the sensor outputs a clear, continuous signal throughout a wide λ range.
The exhaust gas components diffuse through the diffusion layer at the sensor cell. An electrode layer is applied voltage, and this current relative oxygen density in lean. Also this current relative hydrocarbon density in rich.
Therefore, the A/F sensor 1 is able to indicate air fuel ratio by this electrode layer of current. In addition, a heater is integrated in the sensor to ensure the required operating temperature of about 800°C (1,472°F).

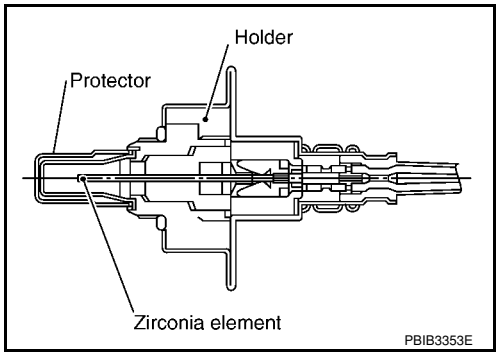

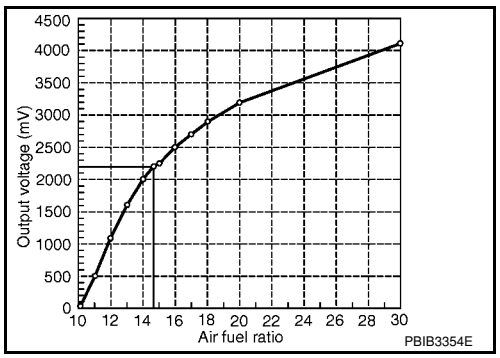

CONSULT-II Reference Value in Data Monitor Mode

INFOID:0000000001702720

Specification data are reference values.

MONITOR ITEM	CONDITION		SPECIFICATION
A/F SEN1 (B1)	• Engine: After warming up	Maintaining engine speed at 2,000 rpm	Fluctuates around 2.2V

On Board Diagnosis Logic

INFOID:0000000001702721

To judge the malfunction, the diagnosis checks that the A/F signal computed by ECM from the air fuel ratio (A/F) sensor 1 signal is not inordinately high.

DTC No.	Trouble diagnosis name	DTC detecting condition	Possible Cause
P0132 0132	Air fuel ratio (A/F) sensor 1 circuit high voltage	The A/F signal computed by ECM from the A/F sensor 1 signal is constantly approx. 5V.	• Harness or connectors [Air fuel ratio (A/F) sensor circuit is open or shorted.] • Air fuel ratio (A/F) sensor 1

DTC Confirmation Procedure

INFOID:0000000001702722

NOTE:
If DTC Confirmation Procedure has been previously conducted, always turn ignition switch OFF and wait at least 10 seconds before conducting the next test.
TESTING CONDITION:
Before performing the following procedure, confirm that battery voltage is more than 11V at idle.

WITH CONSULT-II
1. Start engine and warm it up to normal operating temperature.
2. Select “A/F SEN1 (B1)” in “DATA MONITOR” mode with CONSULT-II.

3. Check “A/F SEN1 (B1)” indication.
   If the indication is constantly approx. 5V, go to EC-222, "Diagnosis Procedure".
   If the indication is not constantly approx. 5V, go to next step.
4. Turn ignition switch OFF, wait at least 10 seconds and then restart engine.
5. Drive and accelerate vehicle to more than 40 km/h (25 MPH) within 20 seconds after restarting engine.
6. Maintain the following conditions for about 20 consecutive seconds.

DATA MONITOR	
MONITOR	NO DTC
ENG SPEED	XXX rpm
COOLAN TEMP/S	XXX ˚C
A/F SEN1 (B1)	XXX V

SEF581Z

ENG SPEED	1,000 - 3,200 rpm
VHCL SPEED SE	More than 40 km/h (25 MPH)
B/FUEL SCHDL	1.5 - 9.0 msec
Shift lever	Suitable position

NOTE:
- **Keep the accelerator pedal as steady as possible during the cruising.**
- **If this procedure is not completed within 1 minute after restarting engine at step 4, return to step 4.**

7. If 1st trip DTC is displayed, go to EC-222, "Diagnosis Procedure".

WITH GST

Follow the procedure “WITH CONSULT-II” above.

Wiring Diagram

INFOID:0000000001702723

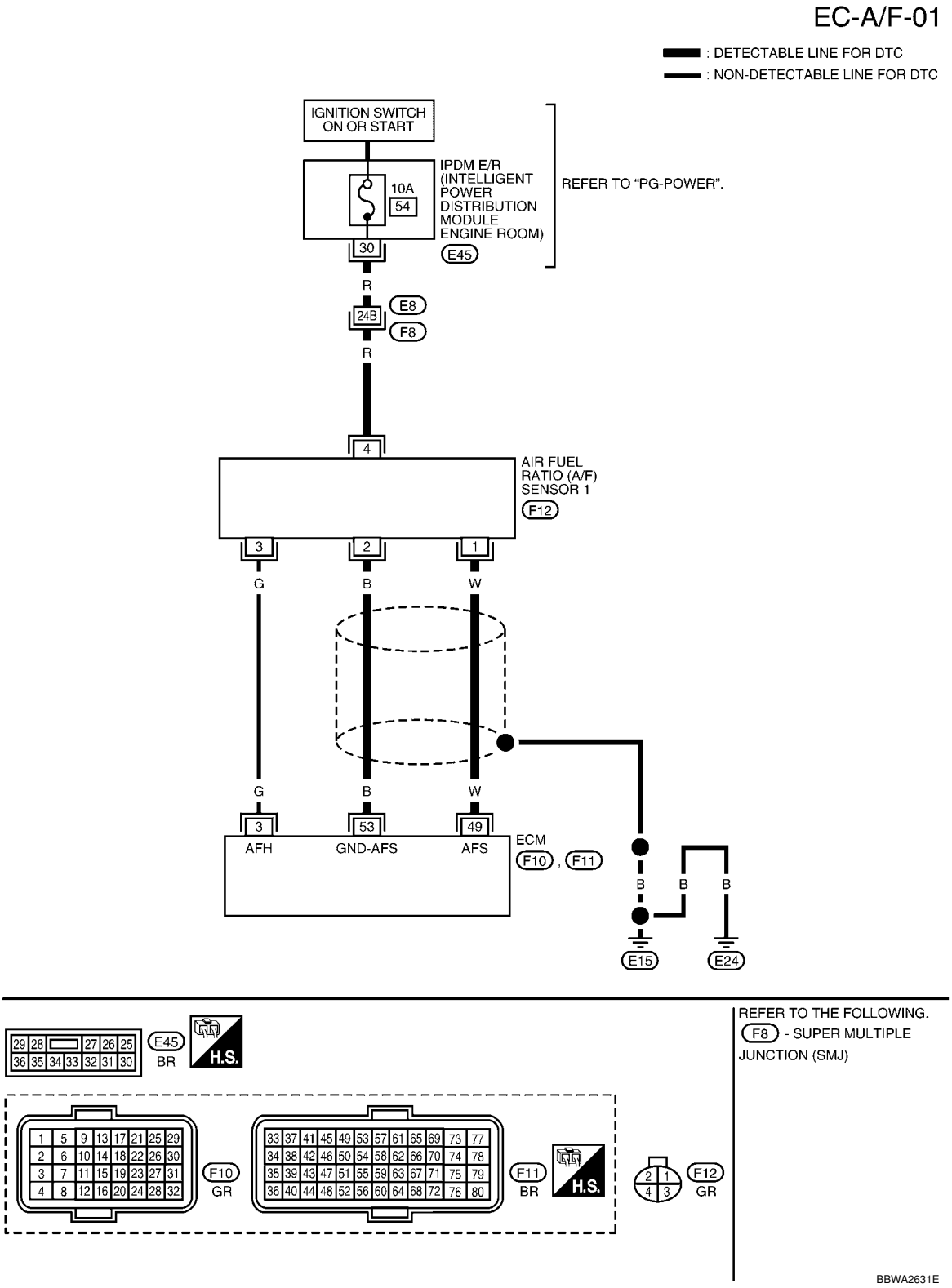

Specification data are reference values and are measured between each terminal and ground.
Pulse signal is measured by CONSULT-II.

CAUTION:

Do not use ECM ground terminals when measuring input/output voltage. Doing so may result in damage to the ECM's transistor. Use a ground other than ECM terminals, such as the ground.

TERMINAL NO.	WIRE COLOR	ITEM	CONDITION	DATA (DC Voltage)
3	G	A/F sensor 1 heater	**[Engine is running]** • **Warm-up condition** • Idle speed (More than 140 seconds after starting engine)	Approximately 2.9 - 8.8V★ 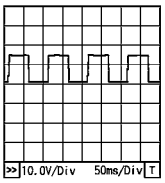 PBIA8148J
49	W	A/F sensor 1	**[Engine is running]** • **Warm-up condition** • Engine speed: 2,000 rpm	Approximately 1.8V Output voltage varies with air fuel ratio.
53	B	A/F sensor 1	**[Ignition switch: ON]**	Approximately 2.2V

★: Average voltage for pulse signal (Actual pulse signal can be confirmed by oscilloscope.)

Diagnosis Procedure

INFOID:0000000001702724

1. CHECK GROUND CONNECTIONS

1. Turn ignition switch OFF.
2. Loosen and retighten three ground screws on the body.
   Refer to EC-142, "Ground Inspection".

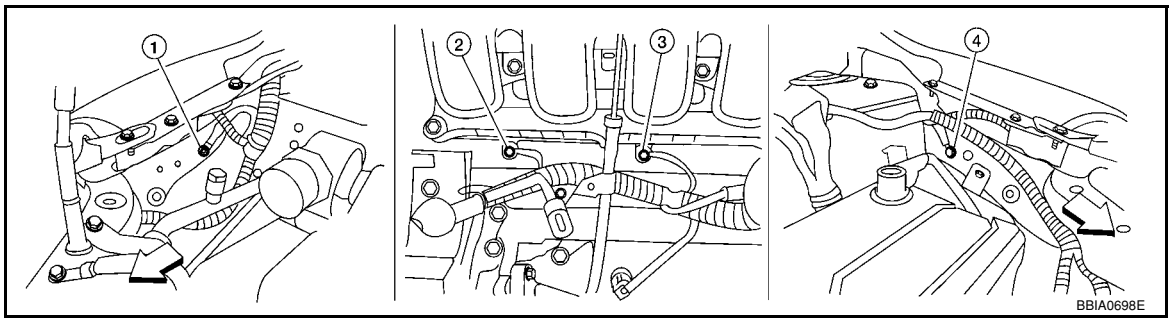

⇦: Vehicle front

1. Body ground E24
2. Engine ground F9
3. Engine ground F16
4. Body ground E15

OK or NG

OK >> GO TO 2.
NG >> Repair or replace ground connections.

2. CHECK AIR FUEL RATIO (A/F) SENSOR 1 POWER SUPPLY CIRCUIT

1. Disconnect A/F sensor 1 harness connector (1).
2. Turn ignition switch ON.

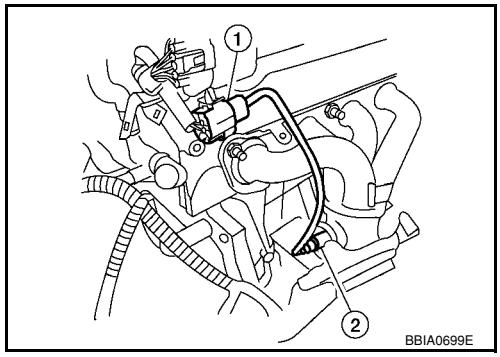

3. Check voltage between A/F sensor 1 terminal 4 and ground with CONSULT-II or tester.

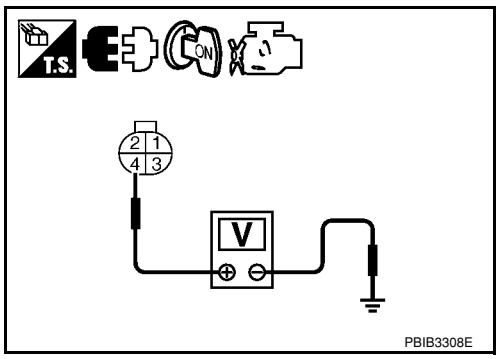

Voltage: Battery voltage

OK or NG

OK >> GO TO 4.
NG >> GO TO 3.

3. DETECT MALFUNCTIONING PART

Check the following.
- Harness connectors E8, F8
- Harness for open or short between A/F sensor 1 and fuse

>> Repair or replace harness or connectors.

4. CHECK A/F SENSOR 1 INPUT SIGNAL CIRCUIT FOR OPEN AND SHORT

1. Turn ignition switch OFF.
2. Disconnect ECM harness connector.
3. Check harness continuity between the following terminals. Refer to Wiring Diagram.

A/F sensor 1 terminal	ECM terminal
1	49
2	53

Continuity should exist.

4. Check harness continuity between ECM terminals 49, 53 or A/F sensor 1 terminals 1, 2 and ground. Refer to Wiring Diagram.

Continuity should not exist.

5. Also check harness for short to power.

OK or NG

OK >> GO TO 5.
NG >> Repair open circuit or short to ground or short to power in harness or connectors.

5. CHECK INTERMITTENT INCIDENT

Perform EC-136.

OK or NG

OK >> GO TO 6.
NG >> Repair or replace.

6. REPLACE AIR FUEL RATIO (A/F) SENSOR 1

Replace air fuel ratio (A/F) sensor 1.

CAUTION:
- **Discard any A/F sensor which has been dropped from a height of more than 0.5 m (19.7 in) onto a hard surface such as a concrete floor; use a new one.**
- **Before installing new A/F sensor, clean exhaust system threads using Oxygen Sensor Thread Cleaner tool J-43897-18 or J-43897-12 and approved anti-seize lubricant.**

>> **INSPECTION END**

Removal and Installation

INFOID:0000000001702725

AIR FUEL RATIO SENSOR

Refer to EM-21.

DTC P0133 A/F SENSOR 1

Component Description

INFOID:0000000001702726

The air fuel ratio (A/F) sensor 1 is a planar one-cell limit current sensor. The sensor element of the A/F sensor 1 is composed an electrode layer, which transports ions. It has a heater in the element.
The sensor is capable of precise measurement λ = 1, but also in the lean and rich range. Together with its control electronics, the sensor outputs a clear, continuous signal throughout a wide λ range.
The exhaust gas components diffuse through the diffusion layer at the sensor cell. An electrode layer is applied voltage, and this current relative oxygen density in lean. Also this current relative hydrocarbon density in rich.
Therefore, the A/F sensor 1 is able to indicate air fuel ratio by this electrode layer of current. In addition, a heater is integrated in the sensor to ensure the required operating temperature of about 800°C (1,472°F).

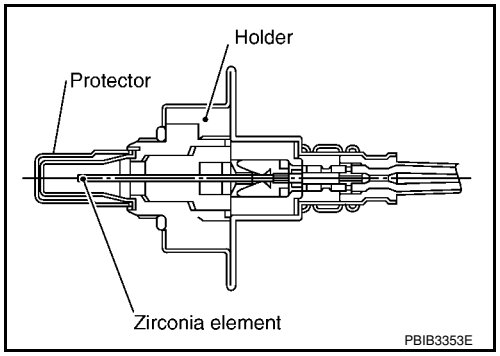

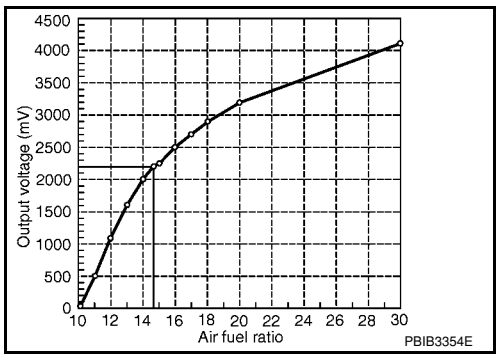

CONSULT-II Reference Value in Data Monitor Mode

INFOID:0000000001702727

Specification data are reference values.

MONITOR ITEM	CONDITION		SPECIFICATION
A/F SEN1 (B1)	• Engine: After warming up	Maintaining engine speed at 2,000 rpm	Fluctuates around 2.2V

On Board Diagnosis Logic

INFOID:0000000001702728

To judge the malfunction of air fuel ratio (A/F) sensor 1, this diagnosis measures response time of the A/F signal computed by ECM from the air fuel ratio (A/F) sensor 1 signal. The time is compensated by engine operating (speed and load), fuel feedback control constant, and the air fuel ratio (A/F) sensor 1 temperature index. Judgment is based on whether the compensated time (the A/F sensor 1 signal cycling time index) is inordinately long or not.

DTC No.	Trouble diagnosis name	DTC detecting condition	Possible Cause
P0133 0133	Air fuel ratio (A/F) sensor 1 circuit slow response	The response of the A/F signal computed by ECM from A/F sensor 1 signal takes more than the specified time.	• Harness or connectors [Air fuel ratio (A/F) sensor circuit is open or shorted.] • Air fuel ratio (A/F) sensor 1 • Air fuel ratio (A/F) sensor heater 1 • Fuel pressure • Fuel injector • Intake air leaks • Exhaust gas leaks • PCV • Mass air flow sensor

DTC Confirmation Procedure

INFOID:0000000001702729

NOTE:

If DTC Confirmation Procedure has been previously conducted, always turn ignition switch OFF and wait at least 10 seconds before conducting the next test.

TESTING CONDITION:

Before performing the following procedure, confirm that battery voltage is more than 11V at idle.

WITH CONSULT-II

1. Start engine and warm it up to normal operating temperature.
2. Turn ignition switch OFF and wait at least 10 seconds.
3. Start engine and keep the engine speed between 3,500 and 4,000 rpm for at least 1minute under no load.
4. Let engine idle for 1 minute.
5. Select “A/F SEN1(B1) P1278/P1279” of “A/F SEN1” in “DTC WORK SUPPORT” mode with CONSULT-II.
6. Touch “START”.
   If “COMPLETED” appears on CONSULT-II screen, go to step 10.
   If “COMPLETED” does not appear on CONSULT-II screen, go to the following step.

A/F SEN1 (B1) P1278/P1279	
OUT OF CONDITION	
MONITOR	
ENG SPEED	XXX rpm
B/FUEL SCHDL	XXX msec
COOLAN TEMP/S	XXX °C
VHCL SPEED SE	XXX km/h

PBIB0756E

7. After perform the following procedure, “TESTING” will be displayed on the CONSULT-II screen.
   a. Increase the engine speed up to 4,000 to 5,000 rpm and keep it for 10 seconds.
   b. Fully release accelerator pedal and then let engine idle for about 10 seconds.
   If “TESTING” is not displayed after 10 seconds, refer to EC-127.
8. Wait for about 20 seconds at idle at under the condition that “TESTING” is displayed on the CONSULT-II screen.

A/F SEN1 (B1) P1278/P1279	
TESTING	
MONITOR	
ENG SPEED	XXX rpm
B/FUEL SCHDL	XXX msec
COOLAN TEMP/S	XXX °C
VHCL SPEED SE	XXX km/h

PBIB1925E

9. Make sure that “TESTING” changes to “COMPLETED”.
   If “TESTING” changed to “OUT OF CONDITION”, refer to EC-127.
10. Make sure that “OK” is displayed after touching “SELF-DIAG RESULT”.
    If “NG” is displayed, go to EC-229, "Diagnosis Procedure".

A/F SEN1 (B1) P1278/P1279
COMPLETED

PBIB0758E

WITH GST

1. Start engine and warm it up to normal operating temperature.
2. Select Service $01 with GST.
3. Calculate the total value of “Short term fuel trim” and “Long term fuel trim” indications.
   Make sure that the total percentage should be within ±15%.
   If OK, go to the following step.
   If NG, check the following.
   - Intake air leaks
   - Exhaust gas leaks
   - Incorrect fuel pressure

- Lack of fuel
- Fuel injector
- Incorrect PCV hose connection
- PCV valve
- Mass air flow sensor

4. Turn ignition switch OFF and wait at least 10 seconds.
5. Start engine and keep the engine speed between 3,500 and 4,000 rpm for at least 1minute under no load.
6. Let engine idle for 1 minute.
7. Increase the engine speed up to 4,000 to 5,000 rpm and keep it for 10 seconds.
8. Fully release accelerator pedal and then let engine idle for about 1 minute.
9. Select Service $07 with GST.
   If 1st trip DTC is detected, go to EC-229, "Diagnosis Procedure".

Wiring Diagram

INFOID:0000000001702730

EC-A/F-01

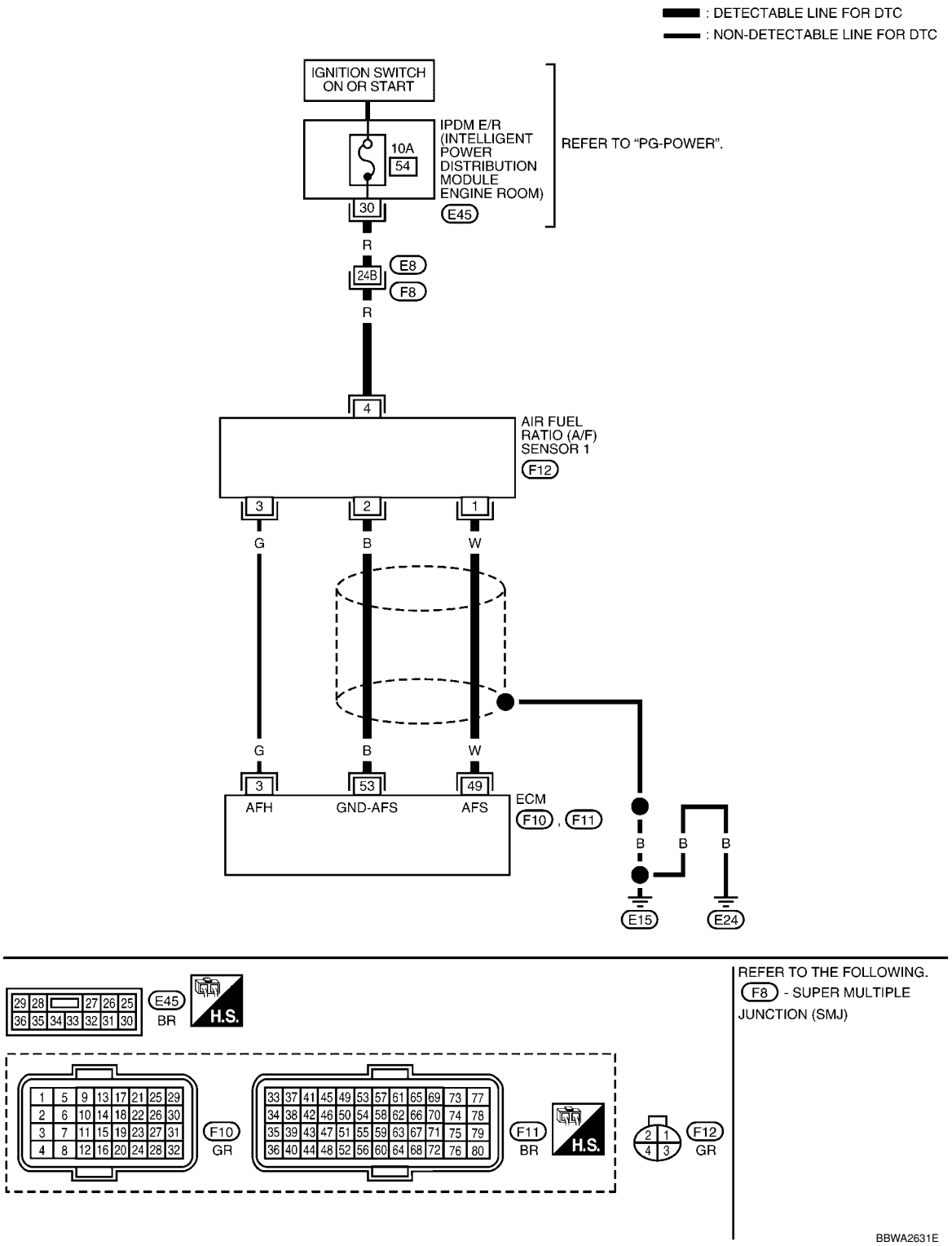

Specification data are reference values and are measured between each terminal and ground.
Pulse signal is measured by CONSULT-II.

CAUTION:

Do not use ECM ground terminals when measuring input/output voltage. Doing so may result in damage to the ECM's transistor. Use a ground other than ECM terminals, such as the ground.

TERMINAL NO.	WIRE COLOR	ITEM	CONDITION	DATA (DC Voltage)
3	G	A/F sensor 1 heater	**[Engine is running]** • **Warm-up condition** • Idle speed (More than 140 seconds after starting engine)	Approximately 2.9 - 8.8V★ 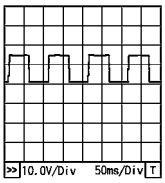 PBIA8148J
49	W	A/F sensor 1	**[Engine is running]** • **Warm-up condition** • Engine speed: 2,000 rpm	Approximately 1.8V Output voltage varies with air fuel ratio.
53	B	A/F sensor 1	**[Ignition switch: ON]**	Approximately 2.2V

★: Average voltage for pulse signal (Actual pulse signal can be confirmed by oscilloscope.)

Diagnosis Procedure

INFOID:0000000001702731

1. CHECK GROUND CONNECTIONS

1. Turn ignition switch OFF.
2. Loosen and retighten engine screw on the body.
   Refer to EC-142, "Ground Inspection".

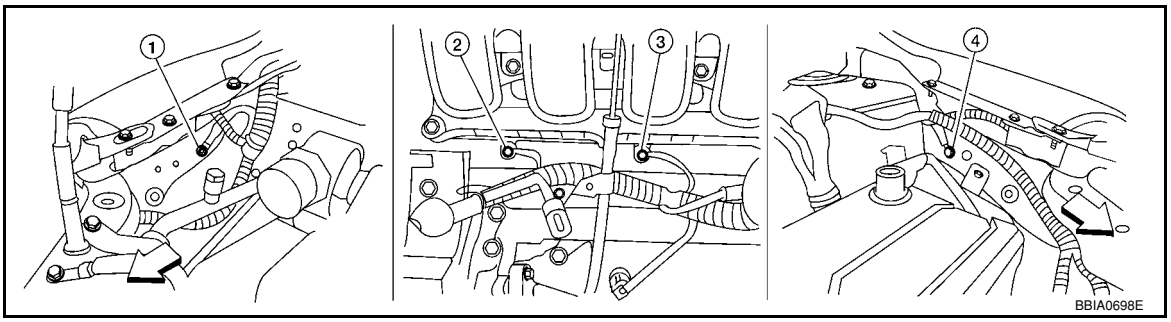

⇦: Vehicle front

1. Body ground E24
2. Engine ground F9
3. Engine ground F16
4. Body ground E15

OK or NG

OK >> GO TO 2.
NG >> Repair or replace ground connections.

2. RETIGHTEN AIR FUEL RATIO (A/F) SENSOR 1

Loosen and retighten the air fuel ratio (A/F) sensor 1 (2).
• Air fuel ratio (A/F) sensor 1 harness connector (1)

Tightening torque: 50 N-m (5.1 kg-m, 37 ft-lb)

>> GO TO 3.

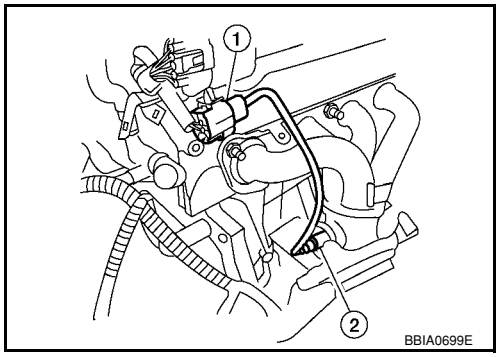

3. CHECK EXHAUST GAS LEAK

1. Start engine and run it at idle.
2. Listen for an exhaust gas leak before three way catalyst (manifold).

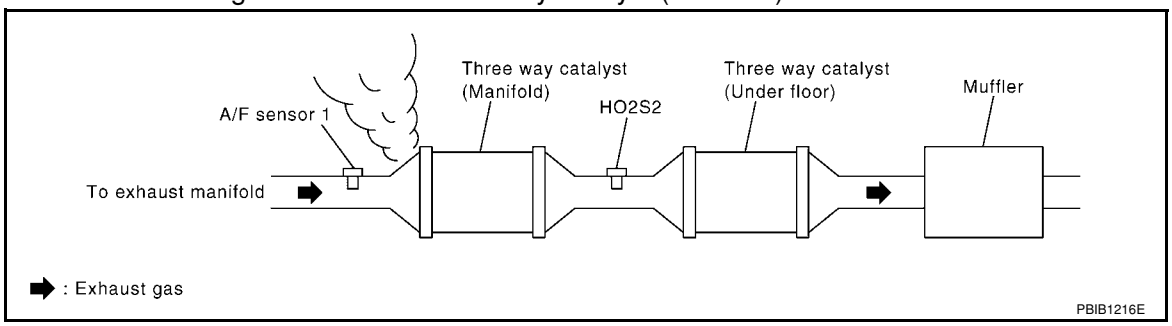

OK or NG

OK >> GO TO 4.
NG >> Repair or replace.

4. CHECK FOR INTAKE AIR LEAK

Listen for an intake air leak after the mass air flow sensor.

OK or NG

OK >> GO TO 5.
NG >> Repair or replace.

5. CLEAR THE SELF-LEARNING DATA

With CONSULT-II

1. Start engine and warm it up to normal operating temperature.
2. Select “SELF-LEARNING CONT” in “WORK SUPPORT” mode with CONSULT-II.
3. Clear the self-learning control coefficient by touching “CLEAR” or “START”.
4. Run engine for at least 10 minutes at idle speed.
   Is the 1st trip DTC P0171 or P0172 detected? Is it difficult to start engine?

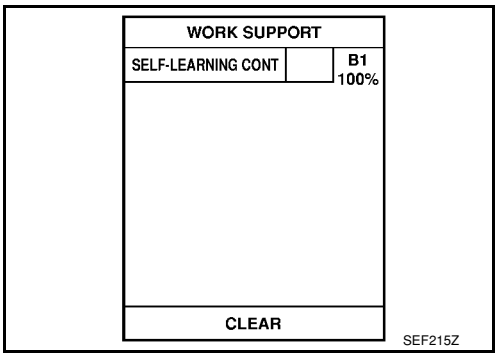

Without CONSULT-II

1. Start engine and warm it up to normal operating temperature.
2. Turn ignition switch OFF.
3. Disconnect mass air flow sensor (1) harness connector, and restart and run engine for at least 5 seconds at idle speed.
4. Stop engine and reconnect mass air flow sensor harness connector.
5. Make sure DTC P0102 is displayed.
6. Erase the DTC memory. Refer to EC-47, "Emission-related Diagnostic Information".
7. Make sure DTC P0000 is displayed.
8. Run engine for at least 10 minutes at idle speed.
   Is the 1st trip DTC P0171 or P0172 detected? Is it difficult to start engine?

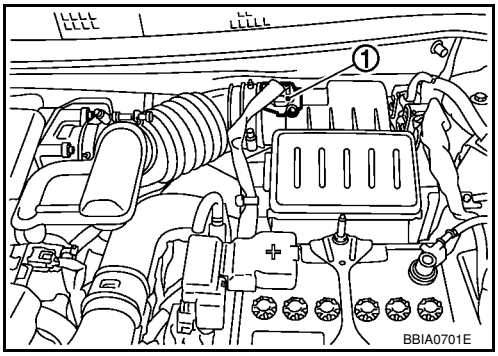

Yes or No

Yes >> Perform trouble diagnosis for DTC P0171, P0172. Refer to EC-257or EC-264.
No >> GO TO 6.

6. CHECK AIR FUEL RATIO (A/F) SENSOR 1 POWER SUPPLY CIRCUIT

1. Turn ignition switch OFF.
2. Disconnect A/F sensor 1 harness connector (1).
- Air fuel ratio (A/F) sensor (2)
3. Turn ignition switch ON.

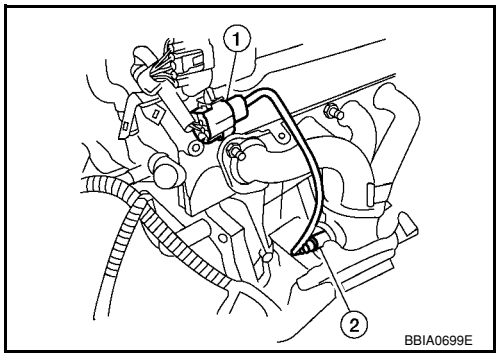

4. Check voltage between A/F sensor 1 terminal 4 and ground with CONSULT-II or tester.

Voltage: Battery voltage

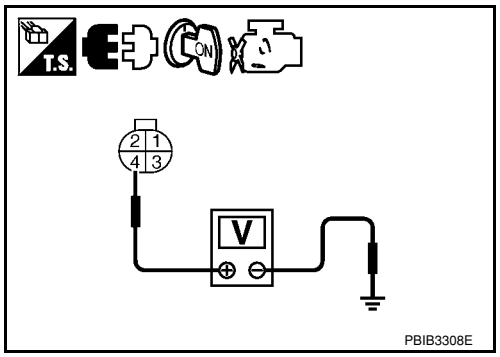

OK or NG

OK >> GO TO 8.
NG >> GO TO 7.

7. DETECT MALFUNCTIONING PART

Check the following.
- Harness connectors E8, F8
- Harness for open or short between A/F sensor 1 and fuse

>> Repair or replace harness or connectors.

8. CHECK A/F SENSOR 1 INPUT SIGNAL CIRCUIT FOR OPEN AND SHORT

1. Turn ignition switch OFF.
2. Disconnect ECM harness connector.
3. Check harness continuity between the following terminals. Refer to Wiring Diagram.

A/F sensor 1 terminal	ECM terminal
1	49
2	53

Continuity should exist.

4. Check harness continuity between ECM terminals 49, 53 or A/F sensor 1 terminals 1, 2 and ground. Refer to Wiring Diagram.

Continuity should not exist.

5. Also check harness for short to power.

OK or NG

OK >> GO TO 9.
NG >> Repair open circuit or short to ground or short to power in harness or connectors.

9. CHECK AIR FUEL RATIO (A/F) SENSOR 1 HEATER

Refer to EC-154, "Component Inspection".

OK or NG

OK >> GO TO 10.
NG >> GO TO 13.

10. CHECK MASS AIR FLOW SENSOR

Refer to EC-173, "Component Inspection".

OK or NG

OK >> GO TO 11.
NG >> Replace mass air flow sensor.

11. CHECK PCV VALVE

Refer to EC-43, "Component Inspection".

OK or NG

OK >> GO TO 12.
NG >> Repair or replace PCV valve.

12. CHECK INTERMITTENT INCIDENT

Perform EC-136.

OK or NG

OK >> GO TO 13.
NG >> Repair or replace.

13. REPLACE AIR FUEL RATIO (A/F) SENSOR 1

Replace air fuel ratio (A/F) sensor 1.

CAUTION:

- **Discard any A/F sensor which has been dropped from a height of more than 0.5 m (19.7 in) onto a hard surface such as a concrete floor; use a new one.**
- **Before installing new A/F sensor, clean exhaust system threads using Oxygen Sensor Thread Cleaner tool J-43897-18 or J-43897-12 and approved anti-seize lubricant.**

>> **INSPECTION END**

Removal and Installation

INFOID:0000000001702732

AIR FUEL RATIO SENSOR

Refer to EM-21.

DTC P0137 HO2S2

Component Description

INFOID:0000000001702733

The heated oxygen sensor 2, after three way catalyst (manifold), monitors the oxygen level in the exhaust gas.
Even if switching characteristics of the air fuel ratio (A/F) sensor 1 are shifted, the air/fuel ratio is controlled to stoichiometric, by the signal from the heated oxygen sensor 2.
This sensor is made of ceramic zirconia. The zirconia generates voltage from approximately 1V in richer conditions to 0V in leaner conditions.
Under normal conditions the heated oxygen sensor 2 is not used for engine control operation.

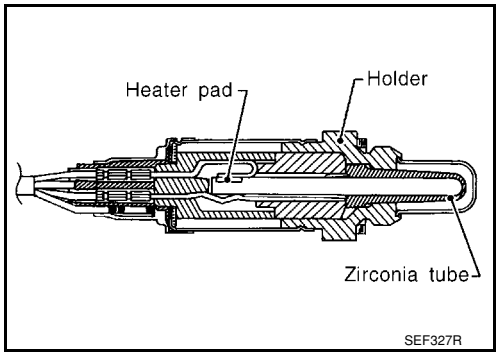

CONSULT-II Reference Value in Data Monitor Mode

INFOID:0000000001702734

Specification data are reference values.

MONITOR ITEM	CONDITION	SPECIFICATION
HO2S2 (B1)	• Revving engine from idle to 3,000 rpm quickly after the following conditions are met. - Engine: After warming up - Keeping the engine speed between 3,500 and 4,000 rpm for 1 minute and at idle for 1 minute under no load	0 - 0.3V ←→ Approx. 0.6 - 1.0V
HO2S2 MNTR (B1)		LEAN ←→ RICH

On Board Diagnosis Logic

INFOID:0000000001702735

The heated oxygen sensor 2 has a much longer switching time between rich and lean than the air fuel ratio (A/F) sensor 1. The oxygen storage capacity before the three way catalyst (manifold) causes the longer switching time. To judge the malfunctions of heated oxygen sensor 2, ECM monitors whether the maximum voltage of the sensor is sufficiently high during the various driving condition such as fuel-cut.

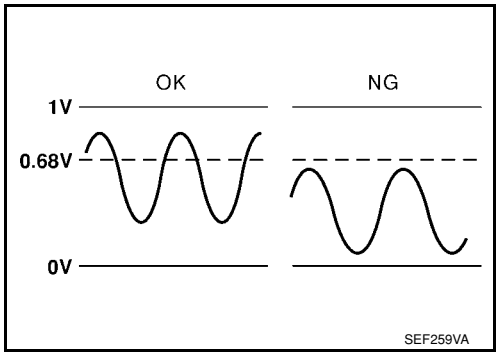

DTC No.	Trouble diagnosis name	DTC detecting condition	Possible cause
P0137 0137	Heated oxygen sensor 2 circuit low voltage	The maximum voltage from the sensor is not reached to the specified voltage.	• Harness or connectors (Heated oxygen sensor 2 circuit open or shorted.) • Heated oxygen sensor 2 • Fuel pressure • Fuel injector • Intake air leaks

DTC Confirmation Procedure

INFOID:0000000001702736

NOTE:
If DTC confirmation Procedure has been previously conducted, always turn ignition switch OFF and wait at least 10 seconds before conducting the next test.

WITH CONSULT-II

TESTING CONDITION:
For the best results, perform DTC WORK SUPPORT at a temperature of 0 to 30°C (32 to 86°F).

1. Turn ignition switch ON and select “DATA MONITOR” mode with CONSULT-II.
2. Start engine and warm it up to the normal operating temperature.
3. Turn ignition switch OFF and wait at least 10 seconds.
4. Start engine and keep the engine speed between 3,500 and 4,000 rpm for at least 1 minute under no load.
5. Let engine idle for 1 minute.
6. Make sure that “COOLAN TEMP/S” indicates more than 70°C (158°F).
   If not, warm up engine and go to next step when “COOLAN TEMP/S” indication reaches to 70°C (158°F).

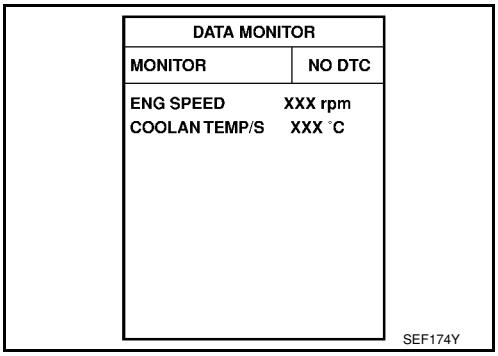

7. Open engine hood.
8. Select “HO2S2 (B1) P1147” of “HO2S2” in “DTC WORK SUPPORT” mode with CONSULT-II.
9. Start engine and following the instruction of CONSULT-II.

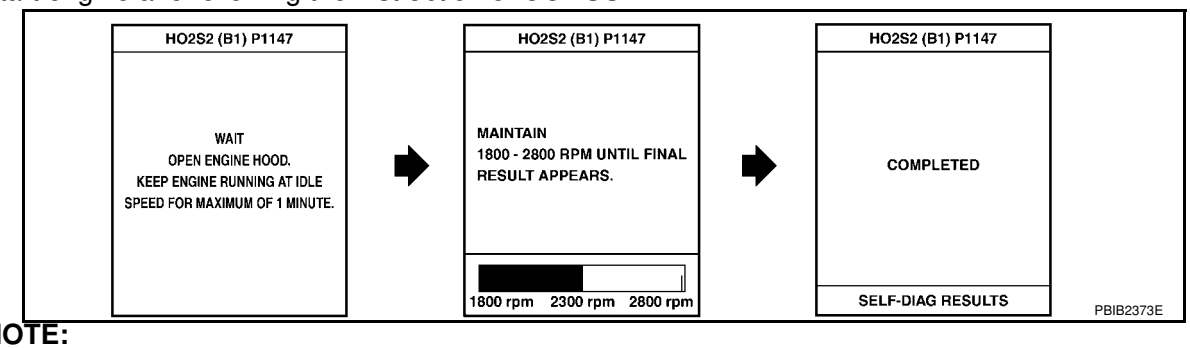

NOTE:
It will take at most 10 minutes until “COMPLETED” is displayed.

10. Make sure that “OK” is displayed after touching “SELF-DIAG RESULTS”.
    If “NG” is displayed, refer to EC-236, "Diagnosis Procedure".
    If “CAN NOT BE DIAGNOSED” is displayed, perform the following.

a. Turn ignition switch OFF and leave the vehicle in a cool place (soak the vehicle).
b. Return to step 1.

Overall Function Check

INFOID:0000000001702737

Use this procedure to check the overall function of the heated oxygen sensor 2 circuit. During this check, a 1st trip DTC might not be confirmed.

WITH GST

1. Start engine and warm it up to the normal operating temperature.
2. Turn ignition switch OFF and wait at least 10 seconds.
3. Start engine and keep the engine speed between 3,500 and 4,000 rpm for at least 1 minute under no load.
4. Let engine idle 1 minute.
5. Set voltmeter probes between ECM terminal 50 (HO2S2 signal) and ground.
6. Check the voltage when revving up to 4,000 rpm under no load at least 10 times.
   (Depress and release accelerator pedal as soon as possible.)
   The voltage should be above 0.68V at least once during this procedure.
   If the voltage can be confirmed in step 6, step 7 is not necessary.
7. Keep vehicle idling for 10 minutes, then check the voltage. Or check the voltage when coasting from 80 km/h (50 MPH) in D position with OD OFF (A/T), D position (CVT) or 3rd gear position (M/T).
   The voltage should be above 0.68V at least once during this procedure.

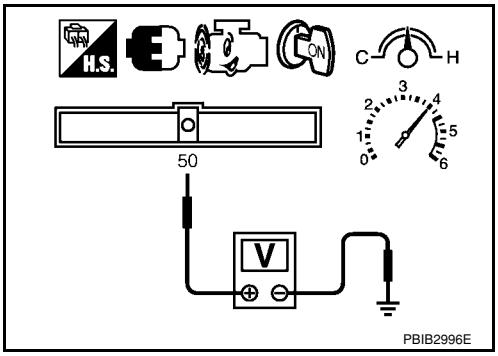

8. If NG, go to EC-236, "Diagnosis Procedure".

Wiring Diagram

INFOID:0000000001702738

EC-HO2S2-01

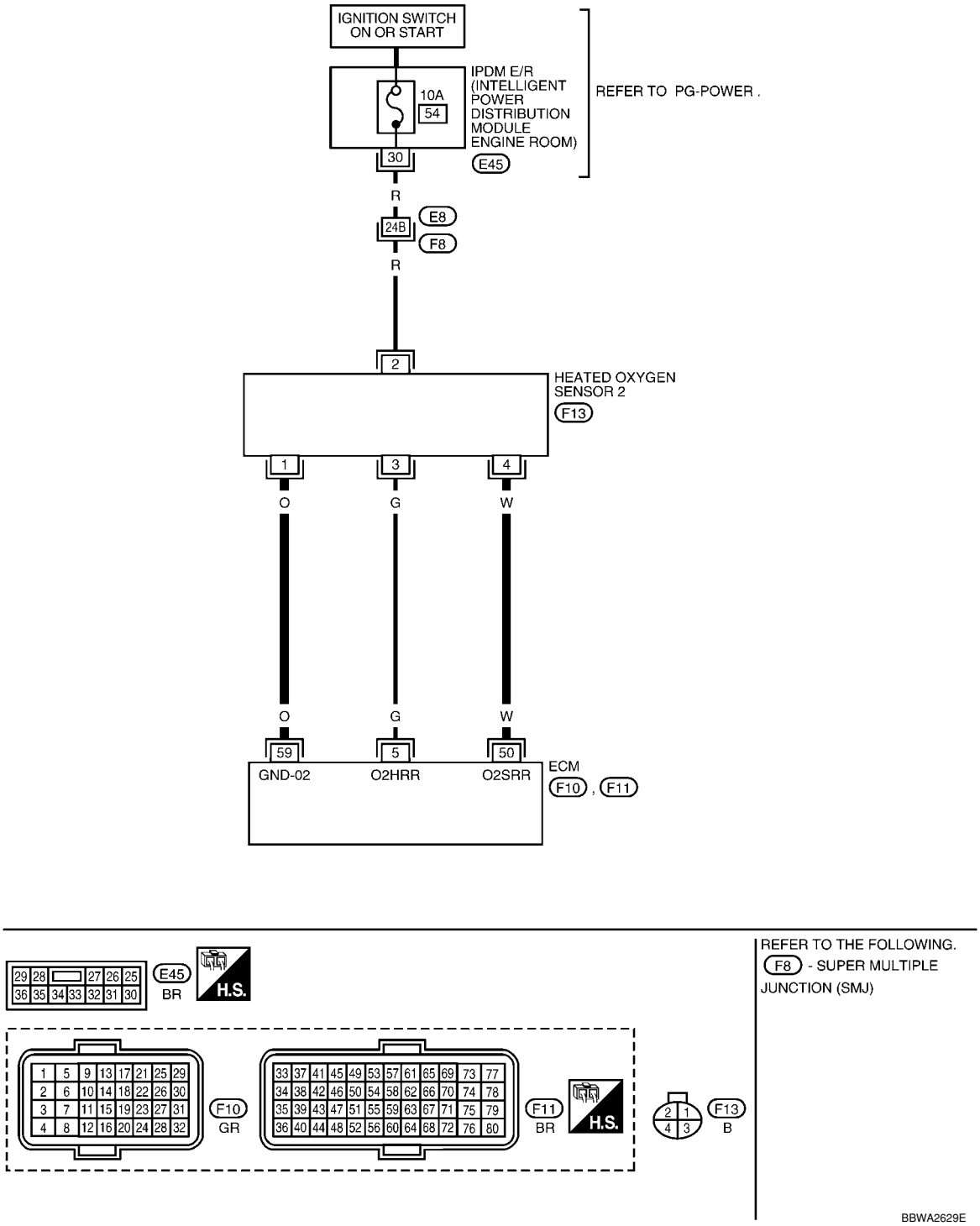

Specification data are reference values and are measured between each terminal and ground.
Pulse signal is measured by CONSULT-II.

CAUTION:

Do not use ECM ground terminals when measuring input/output voltage. Doing so may result in damage to the ECM's transistor. Use a ground other than ECM terminals, such as the ground.

TERMINAL NO.	WIRE COLOR	ITEM	CONDITION	DATA (DC Voltage)
5	G	Heated oxygen sensor 2 heater	**[Engine is running]** • Engine speed: Below 3,600 rpm after the following conditions are met. - Engine: After warming up - Keeping the engine speed between 3,500 and 4,000 rpm for 1 minute and at idle for 1 minute under no load.	Approximately 10V★ 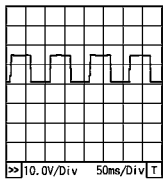 PBIA8148J
			[Ignition switch: ON] • Engine stopped **[Engine is running]** • Engine speed: Above 3,600 rpm.	BATTERY VOLTAGE (11 - 14V)
50	W	Heated oxygen sensor 2	**[Engine is running]** • Revving engine from idle to 3,000 rpm quickly after the following conditions are met. - Engine: After warming up - Keeping the engine speed between 3,500 and 4,000 rpm for 1 minute and at idle for 1 minute under no load.	0 - Approximately 1.0V
59	O	Sensor ground (Heated oxygen sensor 2)	**[Engine is running]** • **Warm-up condition** • Idle speed	Approximately 0V

★: Average voltage for pulse signal (Actual pulse signal can be confirmed by oscilloscope.)

Diagnosis Procedure

INFOID:0000000001702739

1. CHECK GROUND CONNECTIONS

1. Turn ignition switch OFF.
2. Loosen and retighten ground screw on the body.
   Refer to EC-142, "Ground Inspection".

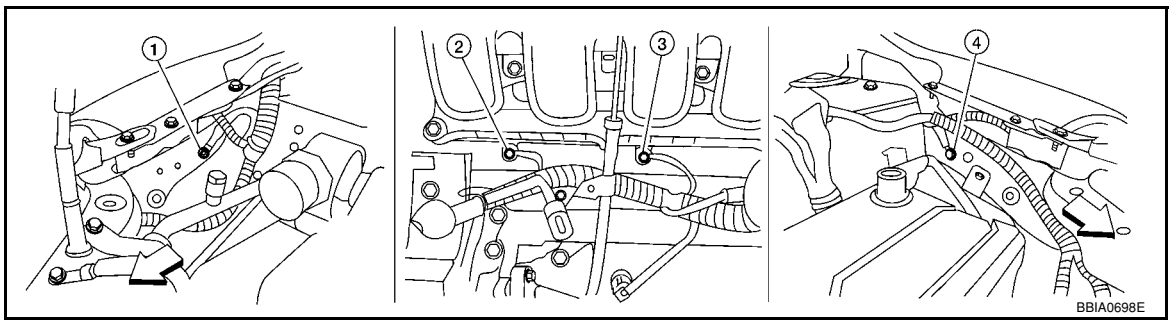

⇦: Vehicle front

1. Body ground E24
2. Engine ground F9
3. Engine ground F16
4. Body ground E15

OK or NG

OK >> GO TO 2.
NG >> Repair or replace ground connections.

2. CLEAR THE SELF-LEARNING DATA

With CONSULT-II

1. Start engine and warm it up to normal operating temperature.
2. Select “SELF-LEARNING CONT” in “WORK SUPPORT” mode with CONSULT-II.
3. Clear the self-learning control coefficient by touching “CLEAR”.
4. Run engine for at least 10 minutes at idle speed.
   Is the 1st trip DTC P0171 detected?
   Is it difficult to start engine?

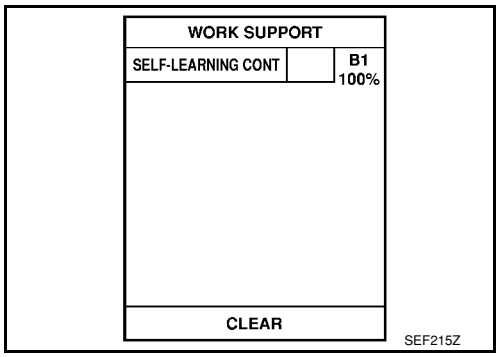

Without CONSULT-II

1. Start engine and warm it up to normal operating temperature.
2. Turn ignition switch OFF.
3. Disconnect mass air flow sensor (1) harness connector, and restart and run engine for at least 5 seconds at idle speed.
4. Stop engine and reconnect mass air flow sensor harness connector.
5. Make sure DTC P0102 is displayed.
6. Erase the DTC memory. Refer to EC-47, "Emission-related Diagnostic Information".
7. Make sure DTC P0000 is displayed.
8. Run engine for at least 10 minutes at idle speed.
   Is the 1st trip DTC P0171 detected?
   Is it difficult to start engine?

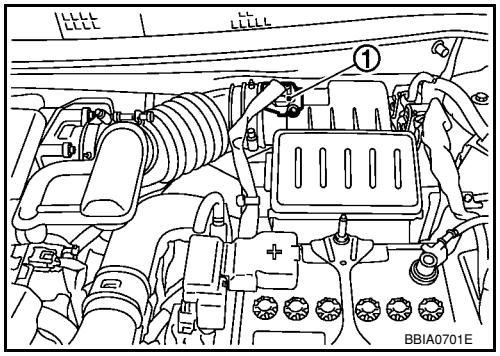

Yes or No

Yes >> Perform trouble diagnosis for DTC P0171. Refer to EC-257.
No >> GO TO 3.

3. CHECK HO2S2 GROUND CIRCUIT FOR OPEN AND SHORT

1. Turn ignition switch OFF.
2. Disconnect heated oxygen sensor 2 harness connector (2).
- ⇦: Vehicle front
- Heated oxygen sensor 2 (1)
3. Disconnect ECM harness connector.
4. Check harness continuity between ECM terminal 59 and HO2S2 terminal 1.
   Refer to Wiring Diagram.

   Continuity should exist.

5. Also check harness for short to ground and short to power.

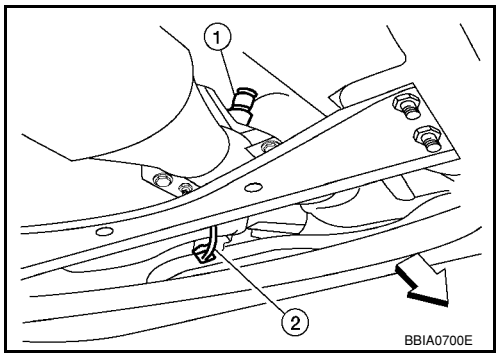

OK or NG

OK >> GO TO 4.
NG >> Repair open circuit or short to ground or short to power in harness or connectors.

4. CHECK HO2S2 INPUT SIGNAL CIRCUIT FOR OPEN AND SHORT

1. Check harness continuity between ECM terminal 50 and HO2S2 terminal 4.
   Refer to Wiring Diagram.

   Continuity should exist.

2. Check harness continuity between ECM terminal 50 or HO2S2 terminal 4 and ground.
   Refer to Wiring Diagram.

   Continuity should not exist.

3. Also check harness for short to power.

OK or NG

OK >> GO TO 5.
NG >> Repair open circuit or short to ground or short to power in harness or connectors.

5. CHECK HEATED OXYGEN SENSOR 2

Refer to EC-238, "Component Inspection".

OK or NG

OK >> GO TO 6.
NG >> Replace heated oxygen sensor 2.

6. CHECK INTERMITTENT INCIDENT

Refer to EC-136.

>> **INSPECTION END**

Component Inspection

INFOID:0000000001702740

HEATED OXYGEN SENSOR 2

With CONSULT-II

1. Start engine and warm it up to the normal operating temperature.
2. Turn ignition switch OFF and wait at least 10 seconds.
3. Start engine and keep the engine speed between 3,500 and 4,000 rpm for at least 1 minute under no load.
4. Let engine idle for 1 minute.
5. Select “FUEL INJECTION” in “ACTIVE TEST” mode, and select “HO2S2 (B1)” as the monitor item with CONSULT-II.

ACTIVE TEST	
FUEL INJECTION	25 %
MONITOR	
ENG SPEED	XXX rpm
HO2S2 (B1)	XXX V

PBIB1783E

6. Check “HO2S2 (B1)” at idle speed when adjusting “FUEL INJECTION” to ±25%.

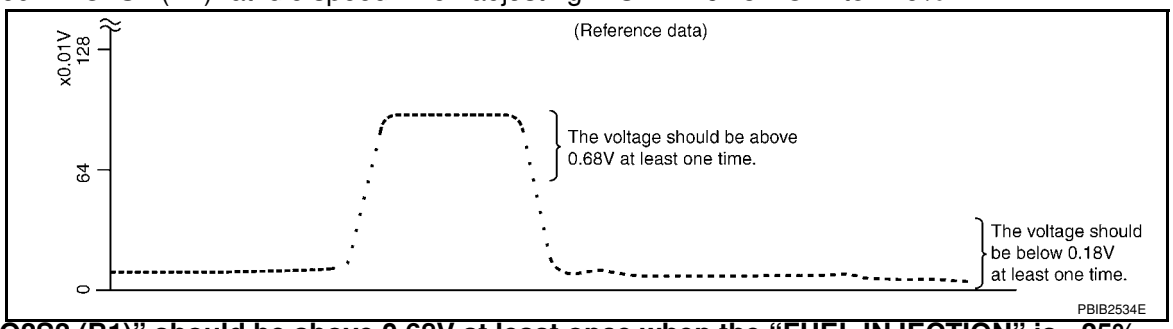

“HO2S2 (B1)” should be above 0.68V at least once when the “FUEL INJECTION” is +25%.
“HO2S2 (B1)” should be below 0.18V at least once when the “FUEL INJECTION” is –25%.

CAUTION:

- **Discard any heated oxygen sensor which has been dropped from a height of more than 0.5 m (19.7 in) onto a hard surface such as a concrete floor; use a new one.**
- **Before installing new oxygen sensor, clean exhaust system threads using Oxygen Sensor Thread Cleaner tool J-43897-18 or J-43897-12 and approved anti-seize lubricant.**

Without CONSULT-II

1. Start engine and warm it up to the normal operating temperature.
2. Turn ignition switch OFF and wait at least 10 seconds.

3. Start engine and keep the engine speed between 3,500 and 4,000 rpm for at least 1 minute under no load.
4. Let engine idle for 1 minute.
5. Set voltmeter probes between ECM terminal 50 (HO2S2 signal) and ground.
6. Check the voltage when revving up to 4,000 rpm under no load at least 10 times.
   (Depress and release accelerator pedal as soon as possible.)
   The voltage should be above 0.68V at least once during this procedure.
   If the voltage is above 0.68V at step 6, step 7 is not necessary.

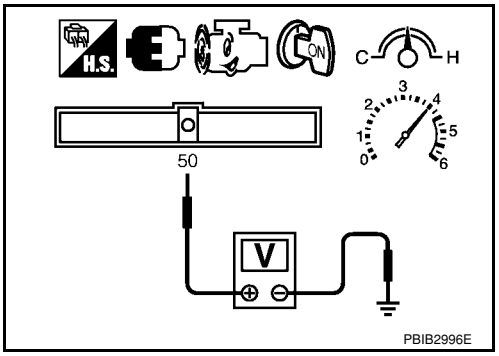

7. Keep vehicle idling for 10 minutes, then check voltage. Or check the voltage when coasting from 80 km/h (50 MPH) in D position with OD OFF (A/T), D position (CVT) or 3rd gear position (M/T).
   The voltage should be below 0.18V at least once during this procedure.
8. If NG, replace heated oxygen sensor 2.
   CAUTION:
   - **Discard any heated oxygen sensor which has been dropped from a height of more than 0.5 m (19.7 in) onto a hard surface such as a concrete floor; use a new one.**
   - **Before installing new oxygen sensor, clean exhaust system threads using Oxygen Sensor Thread Cleaner tool J-43897-18 or J-43897-12 and approved anti-seize lubricant.**

Removal and Installation

INFOID:0000000001702741

HEATED OXYGEN SENSOR 2

Refer to EM-21.

DTC P0138 HO2S2

Component Description

INFOID:0000000001702742

The heated oxygen sensor 2, after three way catalyst (manifold), monitors the oxygen level in the exhaust gas.
Even if switching characteristics of the air fuel ratio (A/F) sensor 1 are shifted, the air/fuel ratio is controlled to stoichiometric, by the signal from the heated oxygen sensor 2.
This sensor is made of ceramic zirconia. The zirconia generates voltage from approximately 1V in richer conditions to 0V in leaner conditions.
Under normal conditions the heated oxygen sensor 2 is not used for engine control operation.

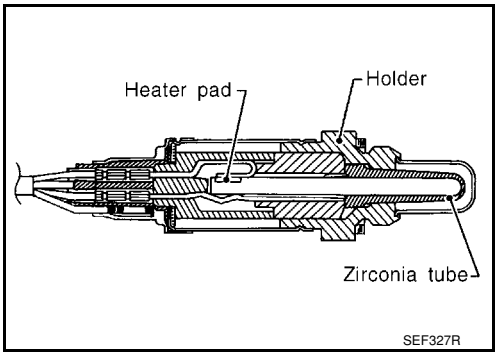

CONSULT-II Reference Value in Data Monitor Mode

INFOID:0000000001702743

Specification data are reference values.

MONITOR ITEM	CONDITION	SPECIFICATION
HO2S2 (B1)	• Revving engine from idle to 3,000 rpm quickly after the following conditions are met. - Engine: After warming up - Keeping the engine speed between 3,500 and 4,000 rpm for 1 minute and at idle for 1 minute under no load	0 - 0.3V ←→ Approx. 0.6 - 1.0V
HO2S2 MNTR (B1)		LEAN ←→ RICH

On Board Diagnosis Logic

INFOID:0000000001702744

The heated oxygen sensor 2 has a much longer switching time between rich and lean than the air fuel ratio (A/F) sensor 1. The oxygen storage capacity before the three way catalyst (manifold) causes the longer switching time.

MALFUNCTION A

To judge the malfunctions of rear heated oxygen sensor 2, ECM monitors whether the voltage is unusually high during the various driving condition such as fuel-cut.

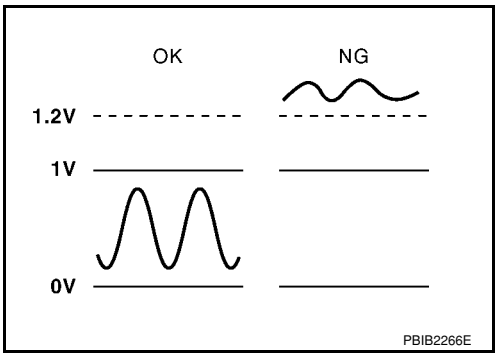

MALFUNCTION B

To judge the malfunctions of heated oxygen sensor 2, ECM monitors whether the minimum voltage of sensor is sufficiently low during the various driving condition such as fuel-cut.

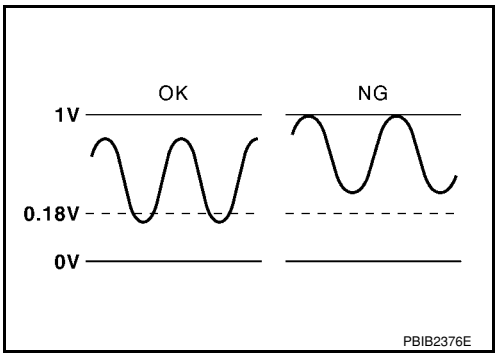

DTC No.	Trouble diagnosis name	DTC detecting condition		Possible cause
P0138 0138	Heated oxygen sensor 2 circuit high voltage	A)	An excessively high voltage from the sensor is sent to ECM.	• Harness or connectors (Heated oxygen sensor 2 circuit is open or shorted.) • Heated oxygen sensor 2
		B)	The minimum voltage from the sensor is not reached to the specified voltage.	• Harness or connectors (Heated oxygen sensor circuit is open or shorted.) • Heated oxygen sensor 2 • Fuel pressure • Fuel injector

DTC Confirmation Procedure

INFOID:0000000001702745

Perform PROCEDURE FOR MALFUNCION A first.
If DTC cannot be confirmed, perform PROCEDURE FOR MALFUNCTION B.
NOTE:
If DTC Confirmation Procedure has been previously conducted, always turn ignition switch OFF and wait at least 10 seconds before conducting the next test.

PROCEDURE FOR MALFUNCTION A

With CONSULT-II

1. Turn ignition switch ON and select “DATA MONITOR” mode with CONSULT-II.
2. Start engine and warm it up to the normal operating temperature.
3. Turn ignition switch OFF and wait at least 10 seconds.
4. Start engine and keep the engine speed between 3,500 and 4,000 rpm for at least 1 minute under no load.
5. Let engine idle for 2 minutes.
6. If 1st trip DTC is detected, go to EC-244, "Diagnosis Procedure".

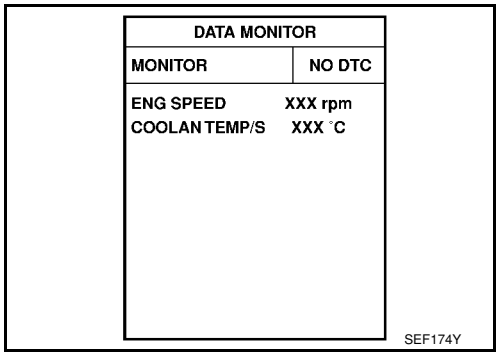

With GST

Follow the procedure “With CONSULT-II” above.

PROCEDURE FOR MALFUNCTION B

With CONSULT-II

TESTING CONDITION:
For the best results, perform DTC WORK SUPPORT at a temperature of 0 to 30°C (32 to 86°F).

1. Turn ignition switch ON and select “DATA MONITOR ” mode with CONSULT-II
2. Start engine and warm it up to the normal operating temperature.
3. Turn ignition switch OFF and wait at least 10 seconds.
4. Start engine and keep the engine speed between 3,500 and 4,000 rpm for at least 1 minute under no load.
5. Let engine idle for 1 minute.
6. Make sure that “COOLAN TEMP/S” indicates more than 70°C (158°F).
   If not, warm up engine and go to next step when “COOLAN TEMP/S” indication reaches to 70°C (158°F).

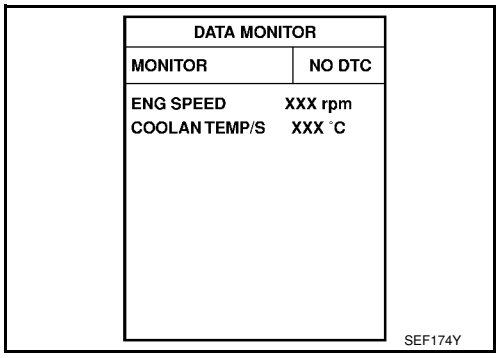

7. Open engine hood.
8. Select “HO2S2 (B1) P1146” of “HO2S2” in “DTC WORK SUPPORT” mode with CONSULT-II.
9. Start engine and following the instruction of COSULT-II.

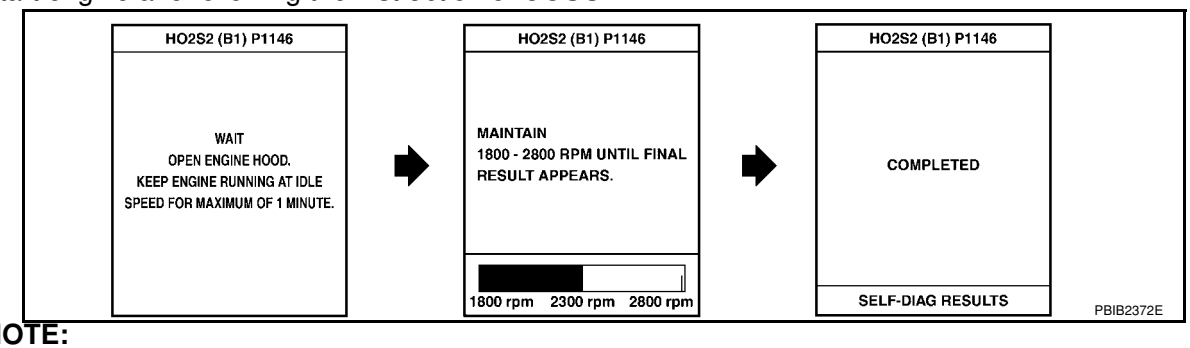

NOTE:
It will take at most 10 minutes until “COMPLETED” is displayed.

10. Make sure that “OK” is displayed after touching “SELF-DIAG RESULTS”.
If “NG” is displayed, refer to EC-244, "Diagnosis Procedure".
If “CAN NOT BE DIAGNOSED” is displayed, perform the following.

a. Turn ignition switch OFF and leave the vehicle in a cool place (soak the vehicle).
b. Return to step 1.

Overall Function Check

INFOID:0000000001702746

PROCEDURE FOR MALFUNCTION B

Use this procedure to check the overall function of the heated oxygen sensor 2 circuit. During this check, a 1st trip DTC might not be confirmed.

With GST

1. Start engine and warm it up to the normal operating temperature.
2. Turn ignition switch OFF and wait at least 10 seconds.
3. Start engine and keep the engine speed between 3,500 and 4,000 rpm for at least 1 minute under no load.
4. Let engine idle 1 minute.
5. Set voltmeter probes between ECM terminal 50 (HO2S2 signal) and ground.
6. Check the voltage when revving up to 4,000 rpm under no load at least 10 times.
(Depress and release accelerator pedal as soon as possible.)
The voltage should be below 0.18V at least once during this procedure.
If the voltage can be confirmed in step 6, step 7 is not necessary.

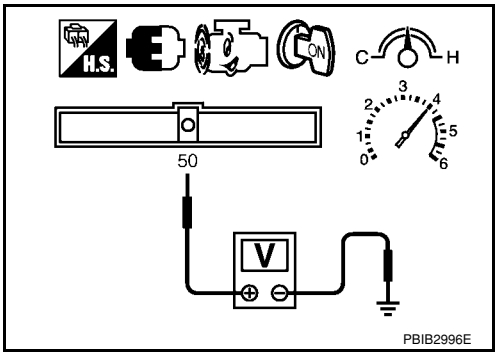

7. Keep vehicle at idling for 10 minutes, then check the voltage. Or check the voltage when coasting from 80 km/h (50 MPH) in D position with OD OFF (A/T), D position (CVT) or 3rd gear position (M/T).
The voltage should be below 0.18V at least once during this procedure.
8. If NG, go to EC-244, "Diagnosis Procedure".

Wiring Diagram

INFOID:0000000001702747

EC-HO2S2-01

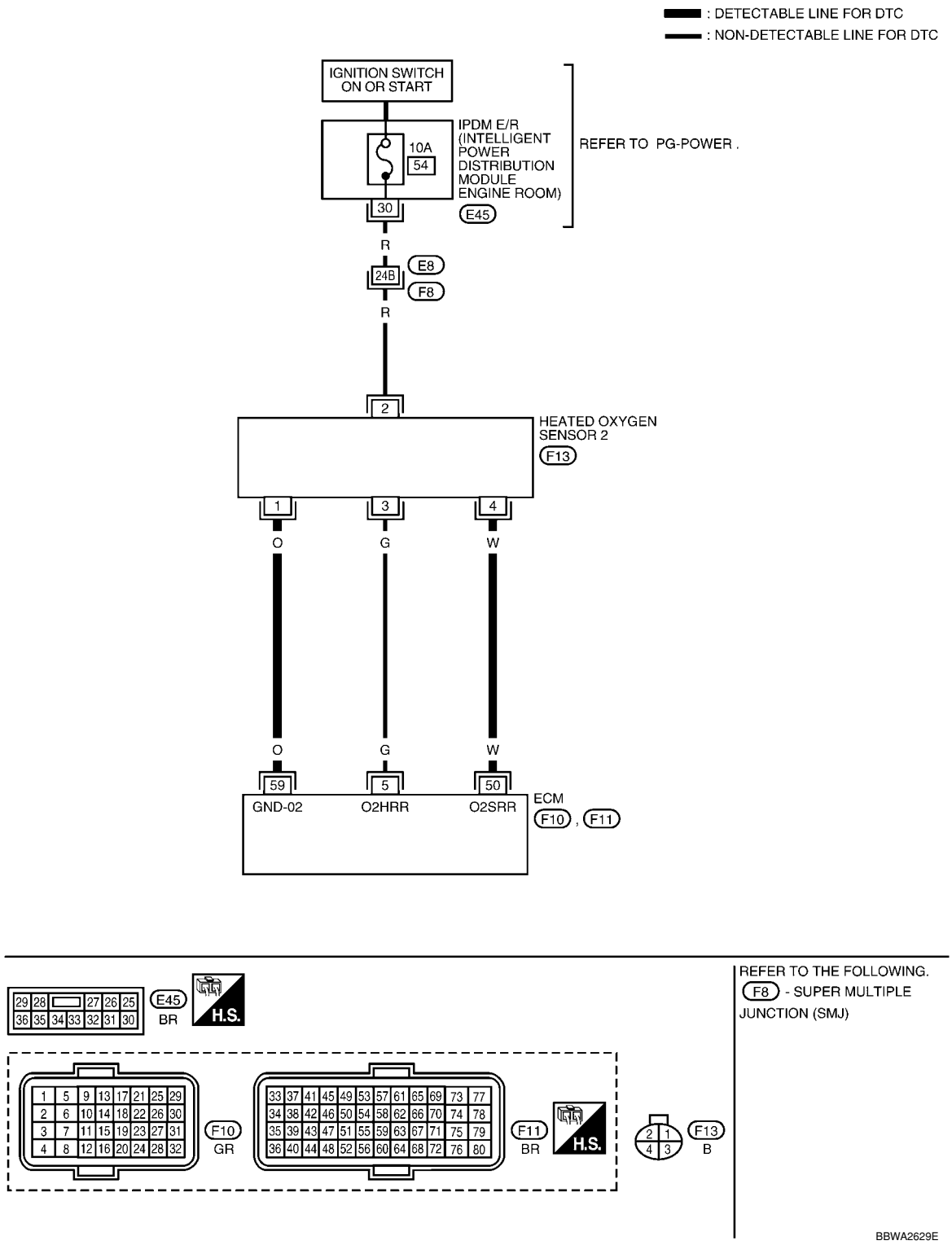

Specification data are reference values and are measured between each terminal and ground.
Pulse signal is measured by CONSULT-II.

CAUTION:

Do not use ECM ground terminals when measuring input/output voltage. Doing so may result in damage to the ECM's transistor. Use a ground other than ECM terminals, such as the ground.

TERMINAL NO.	WIRE COLOR	ITEM	CONDITION	DATA (DC Voltage)
5	G	Heated oxygen sensor 2 heater	**[Engine is running]** • Engine speed: Below 3,600 rpm after the following conditions are met. - Engine: After warming up - Keeping the engine speed between 3,500 and 4,000 rpm for 1 minute and at idle for 1 minute under no load.	Approximately 10V★ 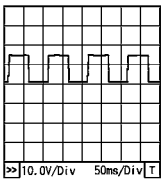 PBIA8148J
			[Ignition switch: ON] • Engine stopped **[Engine is running]** • Engine speed: Above 3,600 rpm.	BATTERY VOLTAGE (11 - 14V)
50	W	Heated oxygen sensor 2	**[Engine is running]** • Revving engine from idle to 3,000 rpm quickly after the following conditions are met. - Engine: After warming up - Keeping the engine speed between 3,500 and 4,000 rpm for 1 minute and at idle for 1 minute under no load.	0 - Approximately 1.0V
59	O	Sensor ground (Heated oxygen sensor 2)	**[Engine is running]** • **Warm-up condition** • Idle speed	Approximately 0V

★: Average voltage for pulse signal (Actual pulse signal can be confirmed by oscilloscope.)

Diagnosis Procedure

INFOID:0000000001702748

PROCEDURE FOR MALFUNCTION A

1. CHECK GROUND CONNECTIONS

1. Turn ignition switch OFF.
2. Loosen and retighten engine screw on the body.
   Refer to EC-142, "Ground Inspection".

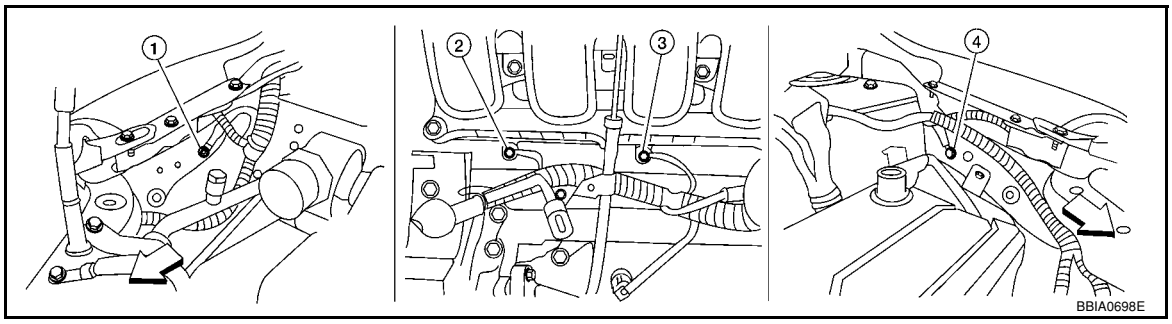

⇦: Vehicle front

1. body ground E24
2. Engine ground F9
3. Engine ground F16
4. Body ground E15

OK or NG

OK >> GO TO 2.
NG >> Repair or replace ground connections.

2. CHECK HO2S2 GROUND CIRCUIT FOR OPEN AND SHORT

1. Disconnect heated oxygen sensor 2 harness connector (2).
- ⇦: Vehicle front
- Heated oxygen sensor 2 (1)
2. Disconnect ECM harness connector.
3. Check harness continuity between ECM terminal 59 and HO2S2 terminal 1. Refer to Wiring Diagram.

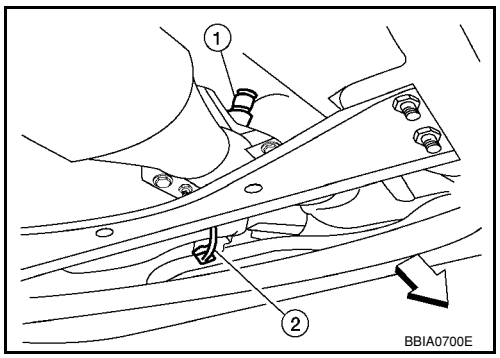

Continuity should exist.

4. Also check harness for short to ground and short to power.

OK or NG

OK >> GO TO 3.
NG >> Repair open circuit or short to ground or short to power in harness or connectors.

3. CHECK HO2S2 INPUT SIGNAL CIRCUIT FOR OPEN AND SHORT

1. Check harness continuity between ECM terminal 50 and HO2S2 terminal 4. Refer to Wiring Diagram.

Continuity should exist.

2. Check harness continuity between ECM terminal 50 or HO2S2 terminal 4 and ground. Refer to Wiring Diagram.

Continuity should not exist.

3. Also check harness for short to power.

OK or NG

OK >> GO TO 4.
NG >> Repair open circuit or short to ground or short to power in harness or connectors.

4. CHECK HO2S2 CONNECTOR FOR WATER

Check connectors for water.

Water should not exist.

OK or NG

OK >> GO TO 5.
NG >> Repair or replace harness or connectors.

5. CHECK HEATED OXYGEN SENSOR 2

Refer to EC-247, "Component Inspection".

OK or NG

OK >> GO TO 6.
NG >> Replace heated oxygen sensor 2.

6. CHECK INTERMITTENT INCIDENT

Refer to EC-136.

>> **INSPECTION END**

PROCEDURE FOR MALFUNCTION B

1. CHECK GROUND CONNECTIONS

1. Turn ignition switch OFF.
2. Loosen and retighten engine screw on the body. Refer to EC-142, "Ground Inspection".

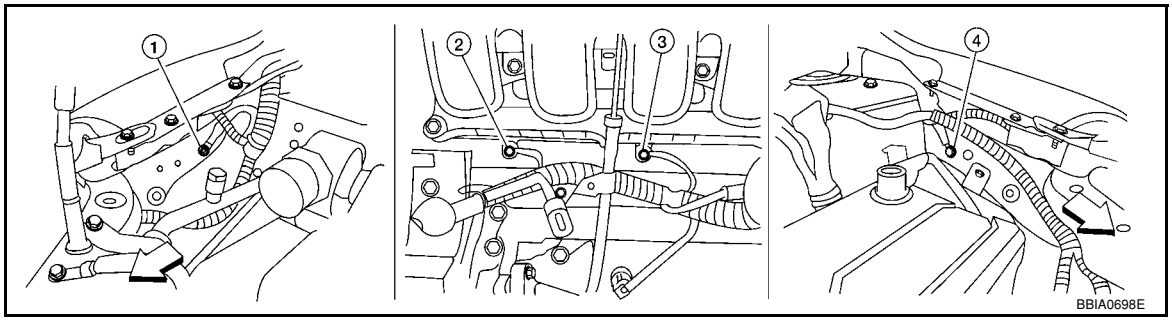

⇦: Vehicle front

1. Body ground E24
2. Engine ground F9
3. Engine ground F16
4. Body ground E15

OK or NG

OK >> GO TO 2.
NG >> Repair or replace ground connections.

2. CLEAR THE SELF-LEARNING DATA

With CONSULT-II

1. Start engine and warm it up to normal operating temperature.
2. Select “SELF-LEARNING CONT” in “WORK SUPPORT” mode with CONSULT-II.
3. Clear the self-learning control coefficient by touching “CLEAR”.
4. Run engine for at least 10 minutes at idle speed.
   Is the 1st trip DTC P0172 detected?
   Is it difficult to start engine?

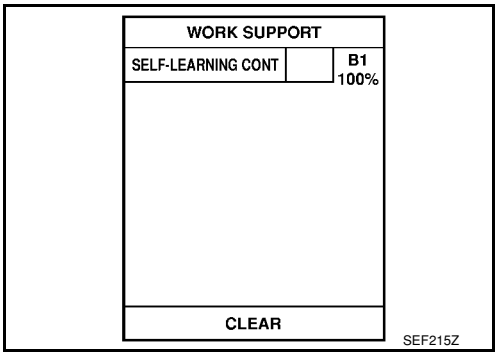

Without CONSULT-II

1. Start engine and warm it up to normal operating temperature.
2. Turn ignition switch OFF.
3. Disconnect mass air flow sensor (1) harness connector, and restart and run engine for at least 5 seconds at idle speed.
4. Stop engine and reconnect mass air flow sensor harness connector.
5. Make sure that DTC P0102 is displayed.
6. Erase the DTC memory. Refer to EC-47, "Emission-related Diagnostic Information".
7. Make sure that DTC P0000 is displayed.
8. Run engine for at least 10 minutes at idle speed.
   Is the 1st trip DTC P0172 detected?
   Is it difficult to start engine?

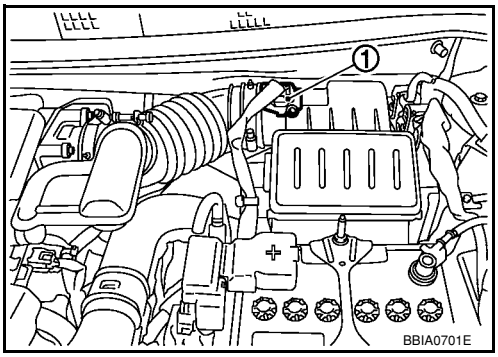

Yes or No

Yes >> Perform trouble diagnosis for DTC P0172. Refer to EC-264.
No >> GO TO 3.

3. CHECK HO2S2 GROUND CIRCUIT FOR OPEN AND SHORT

1. Turn ignition switch OFF.

2. Disconnect heated oxygen sensor 2 harness connector (2).
- ⇦: Vehicle front
- Heated oxygen sensor 2 (1)
3. Disconnect ECM harness connector.
4. Check harness continuity between ECM terminal 59 and HO2S2 terminal 1. Refer to Wiring Diagram.

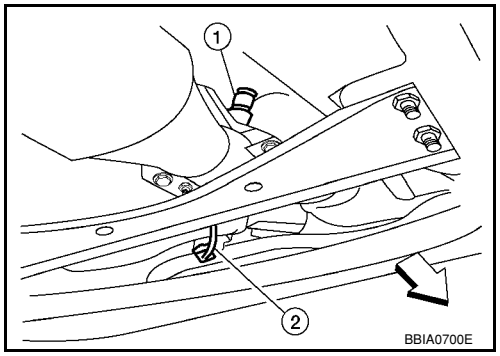

Continuity should exist.

5. Also check harness for short to ground and short to power.

OK or NG

OK >> GO TO 4.
NG >> Repair open circuit or short to ground or short to power in harness or connectors.

4. CHECK HO2S2 INPUT SIGNAL CIRCUIT FOR OPEN AND SHORT

1. Check harness continuity between ECM terminal 50 and HO2S2 terminal 4. Refer to Wiring Diagram.

Continuity should exist.

2. Check harness continuity between ECM terminal 50 or HO2S2 terminal 4 and ground. Refer to Wiring Diagram.

Continuity should not exist.

3. Also check harness for short to power.

OK or NG

OK >> GO TO 5.
NG >> Repair open circuit or short to ground or short to power in harness or connectors.

5. CHECK HEATED OXYGEN SENSOR 2

Refer to EC-247, "Component Inspection".

OK or NG

OK >> GO TO 6.
NG >> Replace heated oxygen sensor 2.

6. CHECK INTERMITTENT INCIDENT

Refer to EC-136.

>> **INSPECTION END**

Component Inspection

INFOID:0000000001702749

HEATED OXYGEN SENSOR 2

With CONSULT-II

1. Start engine and warm it up to the normal operating temperature.
2. Turn ignition switch OFF and wait at least 10 seconds.
3. Start engine and keep the engine speed between 3,500 and 4,000 rpm for at least 1 minute under no load.
4. Let engine idle for 1 minute.

5. Select “FUEL INJECTION” in “ACTIVE TEST” mode, and select “HO2S2 (B1)” as the monitor item with CONSULT-II.

ACTIVE TEST	
FUEL INJECTION	25 %
MONITOR	
ENG SPEED	XXX rpm
HO2S2 (B1)	XXX V

PBIB1783E

6. Check “HO2S2 (B1)” at idle speed when adjusting “FUEL INJECTION” to ±25%.

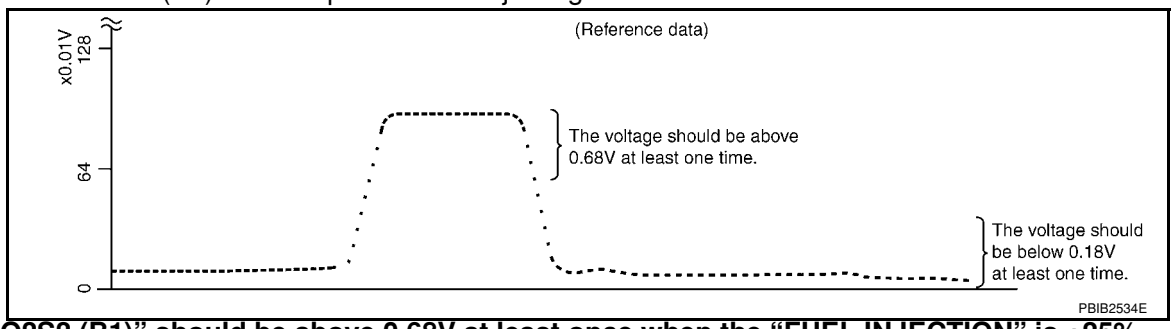

“HO2S2 (B1)” should be above 0.68V at least once when the “FUEL INJECTION” is +25%.
“HO2S2 (B1)” should be below 0.18V at least once when the “FUEL INJECTION” is –25%.

CAUTION:
- **Discard any heated oxygen sensor which has been dropped from a height of more than 0.5 m (19.7 in) onto a hard surface such as a concrete floor; use a new one.**
- **Before installing new oxygen sensor, clean exhaust system threads using Oxygen Sensor Thread Cleaner tool J-43897-18 or J-43897-12 and approved anti-seize lubricant.**

Without CONSULT-II

1. Start engine and warm it up to the normal operating temperature.
2. Turn ignition switch OFF and wait at least 10 seconds.
3. Start engine and keep the engine speed between 3,500 and 4,000 rpm for at least 1 minute under no load.
4. Let engine idle for 1 minute.
5. Set voltmeter probes between ECM terminal 50 (HO2S2 signal) and ground.
6. Check the voltage when revving up to 4,000 rpm under no load at least 10 times.
   (Depress and release accelerator pedal as soon as possible.)
   The voltage should be above 0.68V at least once during this procedure.
   If the voltage is above 0.68V at step 6, step 7 is not necessary.
7. Keep vehicle idling for 10 minutes, then check voltage. Or check the voltage when coasting from 80 km/h (50 MPH) in D position with OD OFF (A/T), D position (CVT) or 3rd gear position (M/T).
   The voltage should be below 0.18V at least once during this procedure.

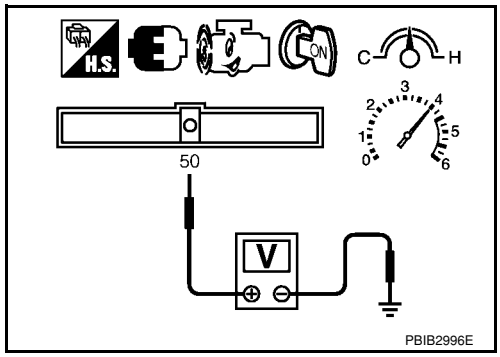

8. If NG, replace heated oxygen sensor 2.
   CAUTION:
   - **Discard any heated oxygen sensor which has been dropped from a height of more than 0.5 m (19.7 in) onto a hard surface such as a concrete floor; use a new one.**
   - **Before installing new oxygen sensor, clean exhaust system threads using Oxygen Sensor Thread Cleaner tool J-43897-18 or J-43897-12 and approved anti-seize lubricant.**

Removal and Installation

INFOID:0000000001702750

HEATED OXYGEN SENSOR 2

Refer to EM-21.

DTC P0139 HO2S2

Component Description

INFOID:0000000001702751

The heated oxygen sensor 2, after three way catalyst (manifold), monitors the oxygen level in the exhaust gas.
Even if switching characteristics of the air fuel ratio (A/F) sensor 1 are shifted, the air/fuel ratio is controlled to stoichiometric, by the signal from the heated oxygen sensor 2.
This sensor is made of ceramic zirconia. The zirconia generates voltage from approximately 1V in richer conditions to 0V in leaner conditions.
Under normal conditions the heated oxygen sensor 2 is not used for engine control operation.

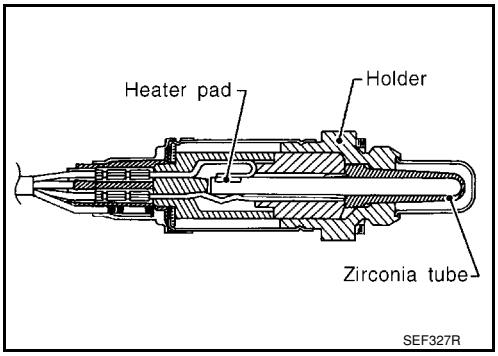

CONSULT-II Reference Value in Data Monitor Mode

INFOID:0000000001702752

Specification data are reference values.

MONITOR ITEM	CONDITION	SPECIFICATION
HO2S2 (B1)	• Revving engine from idle to 3,000 rpm quickly after the following conditions are met. - Engine: After warming up - Keep the engine speed between 3,500 rpm and 4,000 rpm for 1 minute and idle for 1 minute under no load	0 - 0.3V ←→ Approx. 0.6 - 1.0V
HO2S2 MNTR (B1)		LEAN ←→ RICH

On Board Diagnosis Logic

INFOID:0000000001702753

The heated oxygen sensor 2 has a much longer switching time between rich and lean than the air fuel ratio (A/F) sensor 1. The oxygen storage capacity before the three way catalyst (manifold) causes the longer switching time. To judge the malfunctions of heated oxygen sensor 2, ECM monitors whether the switching response of the sensor's voltage is faster than specified during the various driving condition such as fuel-cut.

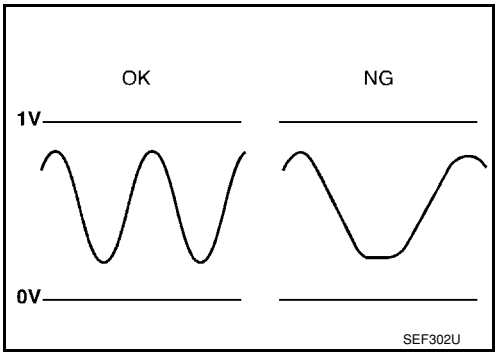

DTC No.	Trouble diagnosis name	DTC detecting condition	Possible cause
P0139 0139	Heated oxygen sensor 2 circuit slow response	It takes more time for the sensor to respond between rich and lean than the specified time.	• Harness or connectors (Heated oxygen sensor circuit is open or shorted.) • Heated oxygen sensor 2 • Fuel pressure • Fuel injector • Intake air leaks

DTC Confirmation Procedure

INFOID:0000000001702754

NOTE:
If DTC Confirmation Procedure has been previously conducted, always turn ignition switch OFF and wait at least 10 seconds before conducting the next test.

WITH CONSULT-II

TESTING CONDITION:
For better results, perform “DTC WORK SUPPORT” at a temperature of 0 to 30 °C (32 to 86 °F).

1. Turn ignition switch ON and select “DATA MONITOR” mode with CONSULT-II.
2. Start engine and warm it up to the normal operating temperature.
3. Turn ignition switch OFF and wait at least 10 seconds.
4. Start engine and keep the engine speed between 3,500 and 4,000 rpm for at least 1 minute under no load.
5. Let engine idle for 1 minute.
6. Make sure that “COOLAN TEMP/S” indicates more than 70°C (158°F).
   If not, warm up engine and go to next step when “COOLAN TEMP/S” indication reaches to 70°C (158°F).

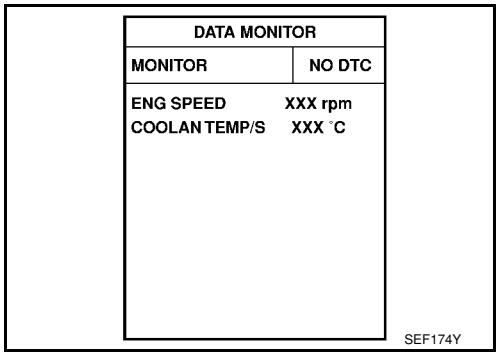

7. Select “HO2S2 (B1) P0139” of “HO2S2” in “DTC WORK SUPPORT” mode with CONSULT-II.
8. Start engine and following the instruction of CONSULT-II.

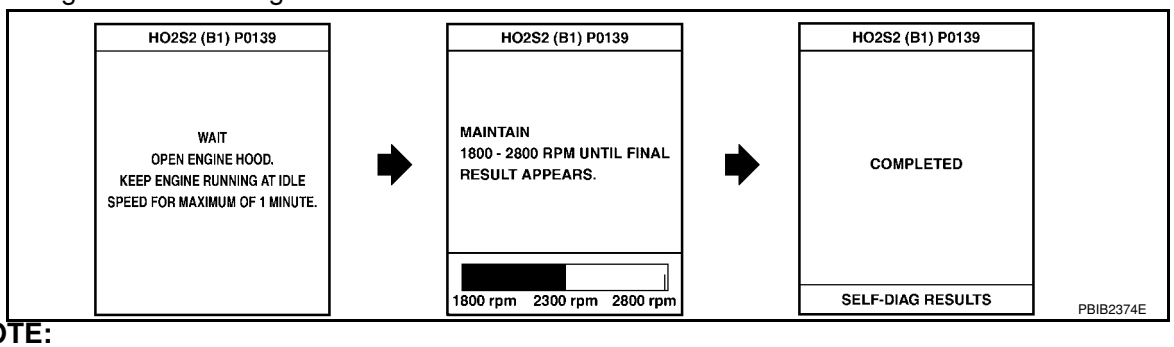

NOTE:
It will take at most 10 minutes until “COMPLETED” is displayed.

9. Make sure that “OK” is displayed after touching “SELF-DIAG RESULTS”.
   If “NG” is displayed, refer to EC-253, "Diagnosis Procedure".
   If “CAN NOT BE DIAGNOSED” is displayed, perform the following.

a. Turn ignition switch OFF and leave the vehicle in a cool place (soak the vehicle).
b. Return to step 1.

Overall Function Check

INFOID:0000000001702755

Use this procedure to check the overall function of the heated oxygen sensor 2 circuit. During this check, a 1st trip DTC might not be confirmed.

WITH GST

1. Start engine and warm it up to the normal operating temperature.
2. Turn ignition switch OFF and wait at least 10 seconds.
3. Start engine and keep the engine between 3,500 and 4,000 rpm for at least 1 minute under no load.
4. Let engine idle for 1 minute.
5. Set voltmeter probes between ECM terminal 50 (HO2S2 signal) and ground.
6. Check the voltage when revving up to 4,000 rpm under no load at least 10 times.
   (Depress and release accelerator pedal as soon as possible.)
   A change of voltage should be more than 0.24V for 1 second during this procedure.
   If the voltage can be confirmed in step 6, step 7 is not necessary.
7. Keep vehicle at idling for 10 minutes, then check the voltage. Or check the voltage when coasting from 80 km/h (50 MPH) in D position with OD OFF (A/T), D position (CVT) or 3rd gear position (M/T).
   A change of voltage should be more than 0.06V for 1 second during this procedure.
8. If NG, go to EC-253, "Diagnosis Procedure".

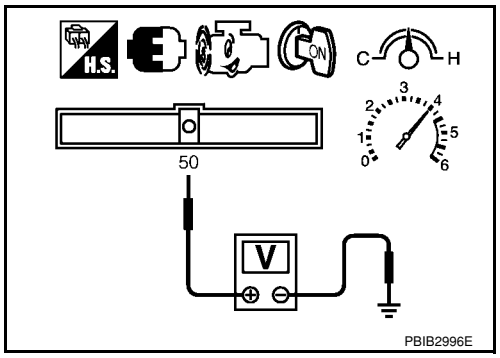

Wiring Diagram

INFOID:0000000001702756

EC-HO2S2-01

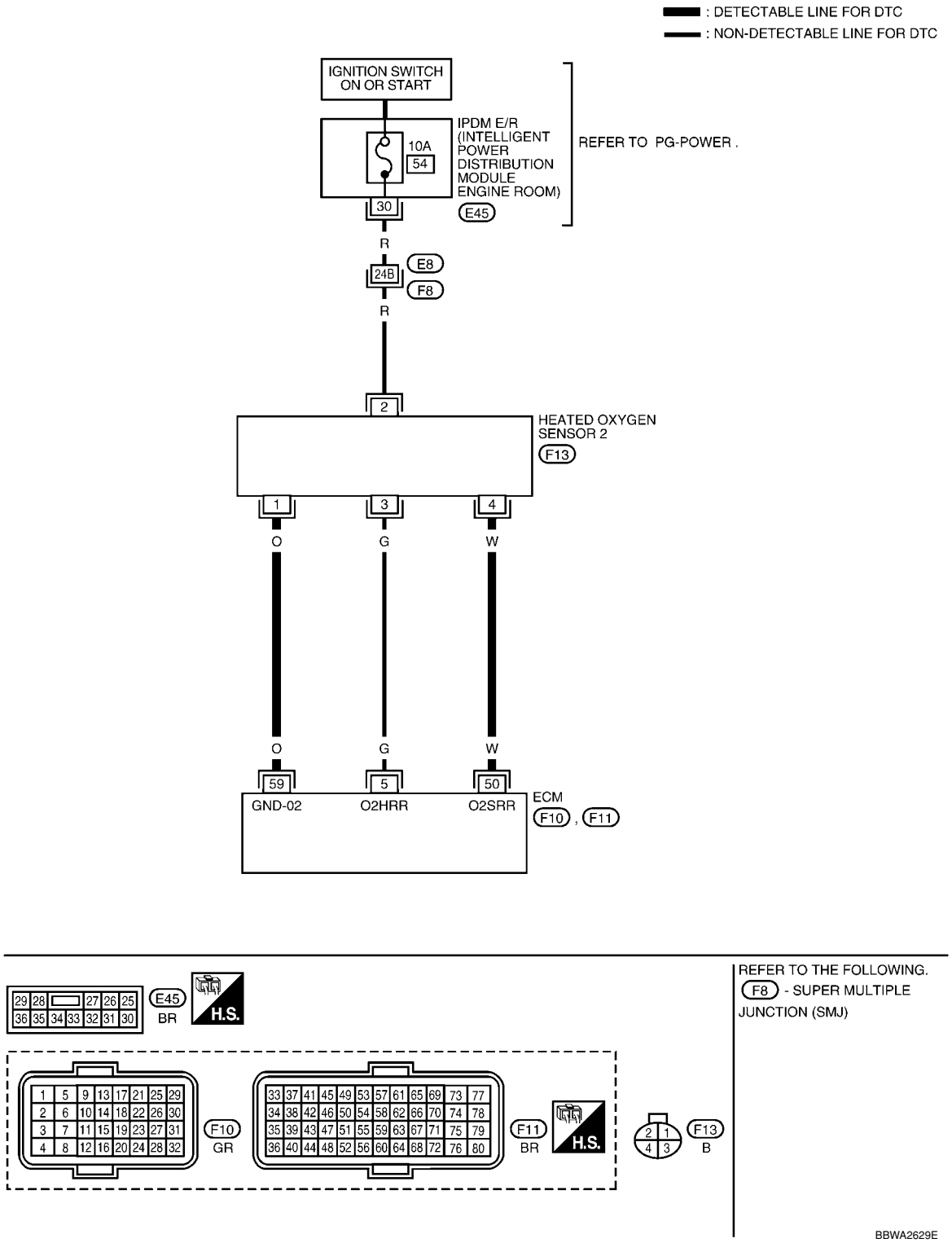

Specification data are reference values and are measured between each terminal and ground.
Pulse signal is measured by CONSULT-II.

CAUTION:

Do not use ECM ground terminals when measuring input/output voltage. Doing so may result in damage to the ECM's transistor. Use a ground other than ECM terminals, such as the ground.

TERMINAL NO.	WIRE COLOR	ITEM	CONDITION	DATA (DC Voltage)
5	G	Heated oxygen sensor 2 heater	**[Engine is running]** • Below 3,600 rpm after the following conditions are met. - Engine: After warming up - Keeping the engine speed between 3,500 and 4,000 rpm for 1 minute and at idle for 1 minute under no load	Approximately 10V★ 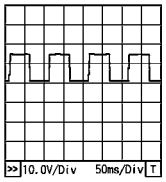 PBIA8148J
			[Ignition switch: ON] • Engine stopped **[Engine is running]** • Engine speed: Above 3,600 rpm	BATTERY VOLTAGE (11 - 14V)
50	W	Heated oxygen sensor 2	**[Engine is running]** • Revving engine from idle to 3,000 rpm quickly after the following conditions are met. - Engine: After warming up - Keeping the engine speed between 3,500 and 4,000 rpm for 1 minute and at idle for 1 minute under no load.	0 - Approximately 1.0V
59	O	Sensor ground (Heated oxygen sensor 2)	**[Engine is running]** • **Warm-up condition** • Idle speed	Approximately 0V

★: Average voltage for pulse signal (Actual pulse signal can be confirmed by oscilloscope.)

Diagnosis Procedure

INFOID:0000000001702757

1. CHECK GROUND CONNECTIONS

1. Turn ignition switch OFF.
2. Loosen and retighten ground screw on the body.
   Refer to EC-142, "Ground Inspection".

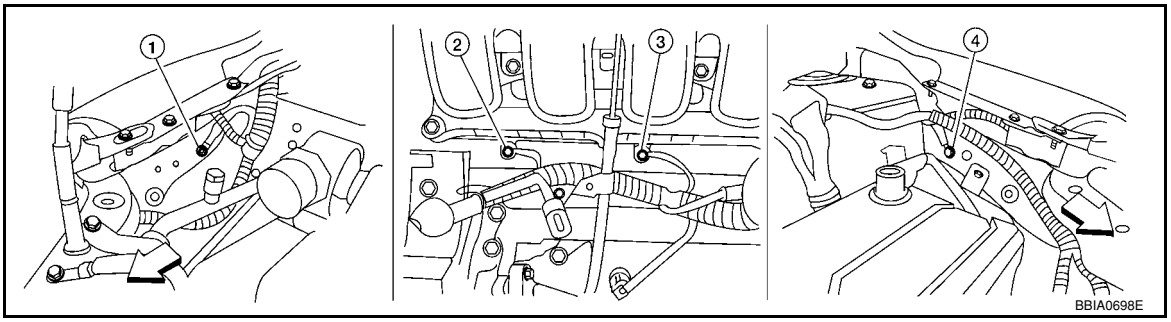

⇦: Vehicle front

1. Body ground E24
2. Engine ground F9
3. Engine ground F16
4. Body ground E15

OK or NG

OK >> GO TO 2.
NG >> Repair or replace ground connections.

2. CLEAR THE SELF-LEARNING DATA

With CONSULT-II

1. Start engine and warm it up to normal operating temperature.
2. Select “SELF-LEARNING CONT” in “WORK SUPPORT” mode with CONSULT-II.
3. Clear the self-learning control coefficient by touching “CLEAR”.
4. Run engine for at least 10 minutes at idle speed.
   Is the 1st trip DTC P0171 or P0172 detected?
   Is it difficult to start engine?

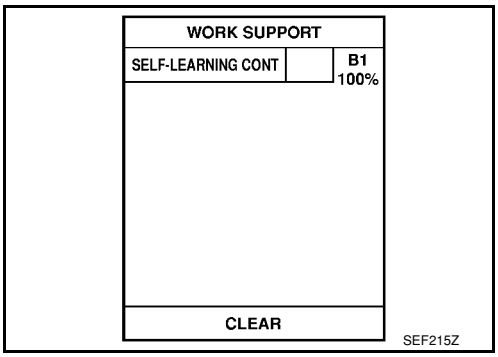

Without CONSULT-II

1. Start engine and warm it up to normal operating temperature.
2. Turn ignition switch OFF.
3. Disconnect mass air flow sensor (1) harness connector, and restart and run engine for at least 5 seconds at idle speed.
4. Stop engine and reconnect mass air flow sensor harness connector.
5. Make sure that DTC P0102 is displayed.
6. Erase the DTC memory. Refer to EC-47, "Emission-related Diagnostic Information".
7. Make sure that DTC P0000 is displayed.
8. Run engine for at least 10 minutes at idle speed.
   Is the 1st trip DTC P0171 or P0172 detected?
   Is it difficult to start engine?

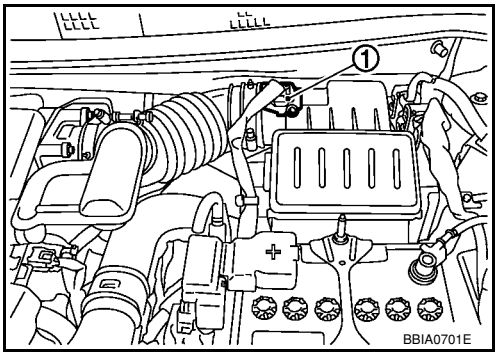

Yes or No

Yes >> Perform trouble diagnosis for DTC P0171 or P0172. Refer to EC-257 or EC-264.
No >> GO TO 3.

3. CHECK HO2S2 GROUND CIRCUIT FOR OPEN AND SHORT

1. Turn ignition switch OFF.
2. Disconnect heated oxygen sensor 2 harness connector (2).
- ⇦: Vehicle front
- Heated oxygen sensor 2 (1)
3. Disconnect ECM harness connector.
4. Check harness continuity between HO2S2 terminal 1 and ECM terminal 59. Refer to Wiring Diagram.

   Continuity should exist.

5. Also check harness for short to ground and short to power.

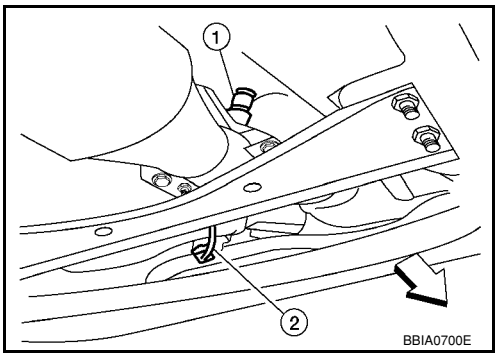

OK or NG

OK >> GO TO 4.
NG >> Repair open circuit or short to ground or short to power in harness or connectors.

4. CHECK HO2S2 INPUT SIGNAL CIRCUIT FOR OPEN AND SHORT

1. Check harness continuity between HO2S2 terminal 4 and ECM terminal 50.
   Refer to Wiring Diagram.

   Continuity should exist.

2. Check harness continuity between ECM terminal 50 or HO2S2 terminal 4 and ground.
   Refer to Wiring Diagram.

   Continuity should not exist.

3. Also check harness for short to power.

OK or NG

OK >> GO TO 5.
NG >> Repair open circuit or short to ground or short to power in harness or connectors.

5. CHECK HEATED OXYGEN SENSOR 2

Refer to EC-255, "Component Inspection".

OK or NG

OK >> GO TO 6.
NG >> Replace heated oxygen sensor 2.

6. CHECK INTERMITTENT INCIDENT

Refer to EC-136.

>> **INSPECTION END**

Component Inspection

INFOID:0000000001702758

HEATED OXYGEN SENSOR 2

With CONSULT-II

1. Start engine and warm it up to the normal operating temperature.
2. Turn ignition switch OFF and wait at least 10 seconds.
3. Start engine and keep the engine speed between 3,500 and 4,000 rpm for at least 1 minute under no load.
4. Let engine idle for 1 minute.
5. Select “FUEL INJECTION” in “ACTIVE TEST” mode, and select “HO2S2 (B1)” as the monitor item with CONSULT-II.

ACTIVE TEST	
FUEL INJECTION	25 %
MONITOR	
ENG SPEED	XXX rpm
HO2S1 (B1)	XXX V
HO2S2 (B1)	XXX V
HO2S1 MNTR (B1)	RICH
HO2S2 MNTR (B1)	RICH

SEF662Y

6. Check “HO2S2 (B1)” at idle speed when adjusting “FUEL INJECTION” to ±25%.

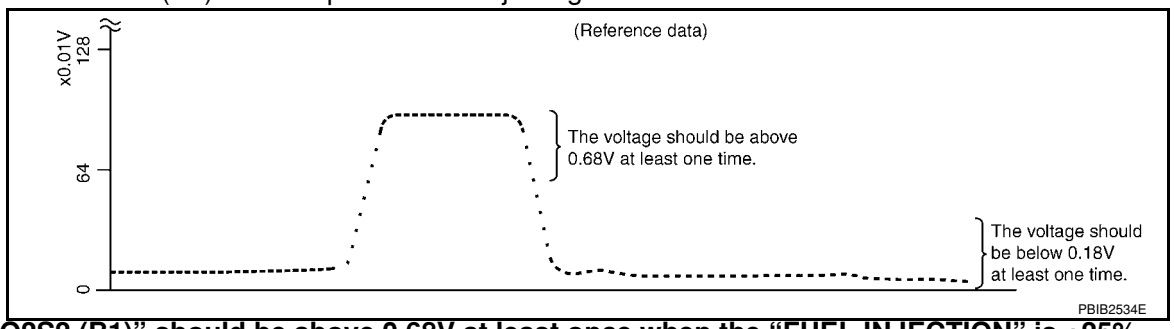

“HO2S2 (B1)” should be above 0.68V at least once when the “FUEL INJECTION” is +25%.
“HO2S2 (B1)” should be below 0.18V at least once when the “FUEL INJECTION” is –25%.

CAUTION:

- **Discard any heated oxygen sensor which has been dropped from a height of more than 0.5 m (19.7 in) onto a hard surface such as a concrete floor; use a new one.**
- **Before installing new oxygen sensor, clean exhaust system threads using Oxygen Sensor Thread Cleaner tool J-43897-18 or J-43897-12 and approved anti-seize lubricant.**

Without CONSULT-II

1. Start engine and warm it up to the normal operating temperature.
2. Turn ignition switch OFF and wait at least 10 seconds.
3. Start engine and keep the engine speed between 3,500 and 4,000 rpm for at least 1 minute under no load.

4. Let engine idle for 1 minute.
5. Set voltmeter probes between ECM terminal 50 (HO2S2 signal) and ground.
6. Check the voltage when revving up to 4,000 rpm under no load at least 10 times.
   (Depress and release accelerator pedal as soon as possible.)
   The voltage should be above 0.68V at least once during this procedure.
   If the voltage is above 0.68V at step 6, step 7 is not necessary.
7. Keep vehicle idling for 10 minutes, then check voltage. Or check the voltage when coasting from 80 km/h (50 MPH) in D position with OD OFF (A/T), D position (CVT) or 3rd gear position (M/T).
   The voltage should be below 0.18V at least once during this procedure.

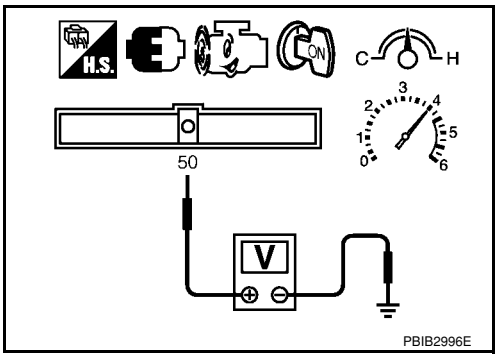

8. If NG, replace heated oxygen sensor 2.

CAUTION:
- **Discard any heated oxygen sensor which has been dropped from a height of more than 0.5 m (19.7 in) onto a hard surface such as a concrete floor; use a new one.**
- **Before installing new oxygen sensor, clean exhaust system threads using Oxygen Sensor Thread Cleaner tool J-43897-18 or J-43897-12 and approved anti-seize lubricant.**

Removal and Installation

INFOID:0000000001702759

HEATED OXYGEN SENSOR 2

Refer to EM-21

DTC P0171 FUEL INJECTION SYSTEM FUNCTION

On Board Diagnosis Logic

INFOID:0000000001702760

With the Air/Fuel Mixture Ratio Self-Learning Control, the actual mixture ratio can be brought closely to the theoretical mixture ratio based on the mixture ratio feedback signal from the air fuel ratio (A/F) sensor 1. The ECM calculates the necessary compensation to correct the offset between the actual and the theoretical ratios. In case the amount of the compensation value is extremely large (The actual mixture ratio is too lean.), the ECM judges the condition as the fuel injection system malfunction and lights up the MIL (2 trip detection logic).

Sensor	Input Signal to ECM	ECM function	Actuator
Air fuel ratio (A/F) sensor 1	Density of oxygen in exhaust gas (Mixture ratio feedback signal)	Fuel injection control	Fuel injector

DTC No.	Trouble diagnosis name	DTC detecting condition	Possible cause
P0171 0171	Fuel injection system too lean	• Fuel injection system does not operate properly. • The amount of mixture ratio compensation is too large. (The mixture ratio is too lean.)	• Intake air leaks • Air fuel ratio (A/F) sensor 1 • Fuel injector • Exhaust gas leaks • Incorrect fuel pressure • Lack of fuel • Mass air flow sensor • Incorrect PCV hose connection

DTC Confirmation Procedure

INFOID:0000000001702761

NOTE:
If DTC Confirmation Procedure has been previously conducted, always turn ignition switch OFF and wait at least 10 seconds before conducting the next test.

WITH CONSULT-II

1. Start engine and warm it up to normal operating temperature.
2. Turn ignition switch OFF and wait at least 10 seconds.
3. Turn ignition switch ON and select “SELF-LEARNING CONT” in “WORK SUPPORT” mode with CONSULT-II.
4. Clear the self-learning control coefficient by touching “CLEAR”.
5. Select “DATA MONITOR” mode with CONSULT-II.
6. Start engine again and let it idle for at least 10 minutes.
   The 1st trip DTC P0171 should be detected at this stage, if a malfunction exists. If so, go to EC-260, "Diagnosis Procedure".
   NOTE:
   If 1st trip DTC is not detected during above procedure, performing the following procedure is advised.

a. Turn ignition switch OFF and wait at least 10 seconds.
b. Start engine and drive the vehicle under the similar conditions to (1st trip) Freeze Frame Data for 10 minutes. Refer to the table below.
   Hold the accelerator pedal as steady as possible.

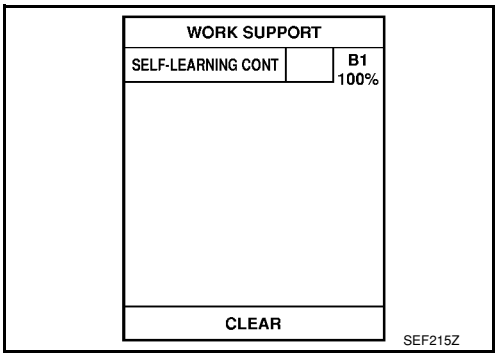

The similar conditions to (1st trip) Freeze Frame Data means the vehicle operation that the following conditions should be satisfied at the same time.

Engine speed	Engine speed in the freeze frame data ± 400 rpm
Vehicle speed	Vehicle speed in the freeze frame data ± 10 km/h (6 MPH)

Engine coolant temperature (T) condition	When the freeze frame data shows lower than 70 °C (158 °F), T should be lower than 70 °C (158 °F).
	When the freeze frame data shows higher than or equal to 70 °C (158 °F), T should be higher than or equal to 70 °C (158 °F).

7. If it is difficult to start engine at step 6, the fuel injection system has a malfunction, too.
8. Crank engine while depressing accelerator pedal. If engine starts, go to EC-260, "Diagnosis Procedure". If engine does not start, check exhaust and intake air leak visually.

WITH GST

1. Start engine and warm it up to normal operating temperature.
2. Turn ignition switch OFF and wait at least 10 seconds.
3. Disconnect mass air flow sensor (1) harness connector.
4. Restart engine and let idle for at least 5 seconds.
5. Stop engine and reconnect mass air flow sensor (1) harness connector.
6. Select Service $03 with GST. Make sure DTC P0102 is detected.
7. Select Service $04 with GST and erase the DTC P0102.
8. Start engine again and let it idle for at least 10 minutes.
9. Select Service $07 with GST. The 1st trip DTC P0171 should be detected at this stage, if a malfunction exists. If so, go to EC-260, "Diagnosis Procedure".

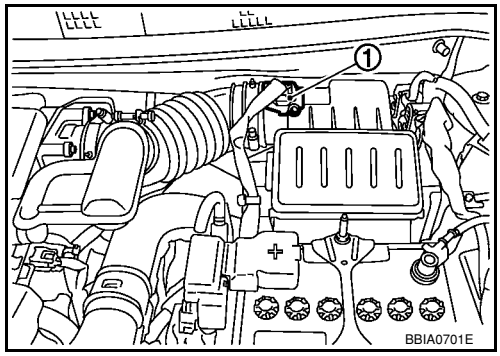

NOTE:
If 1st trip DTC is not detected during above procedure, performing the following procedure is advised.

a. Turn ignition switch OFF and wait at least 10 seconds.
b. Start engine and drive the vehicle under the similar conditions to (1st trip) Freeze Frame Data for 10 minutes. Refer to the table below.
Hold the accelerator pedal as steady as possible.

The similar conditions to (1st trip) Freeze Frame Data means the vehicle operation that the following conditions should be satisfied at the same time.

Engine speed	Engine speed in the freeze frame data ± 400 rpm
Vehicle speed	Vehicle speed in the freeze frame data ± 10 km/h (6 MPH)
Engine coolant temperature (T) condition	When the freeze frame data shows lower than 70 °C (158 °F), T should be lower than 70 °C (158 °F).
	When the freeze frame data shows higher than or equal to 70 °C (158 °F), T should be higher than or equal to 70 °C (158 °F).

10. If it is difficult to start engine at step 8, the fuel injection system has a malfunction.
11. Crank engine while depressing accelerator pedal. If engine starts, go to EC-260, "Diagnosis Procedure". If engine does not start, check exhaust and intake air leak visually.

Wiring Diagram

INFOID:0000000001702762

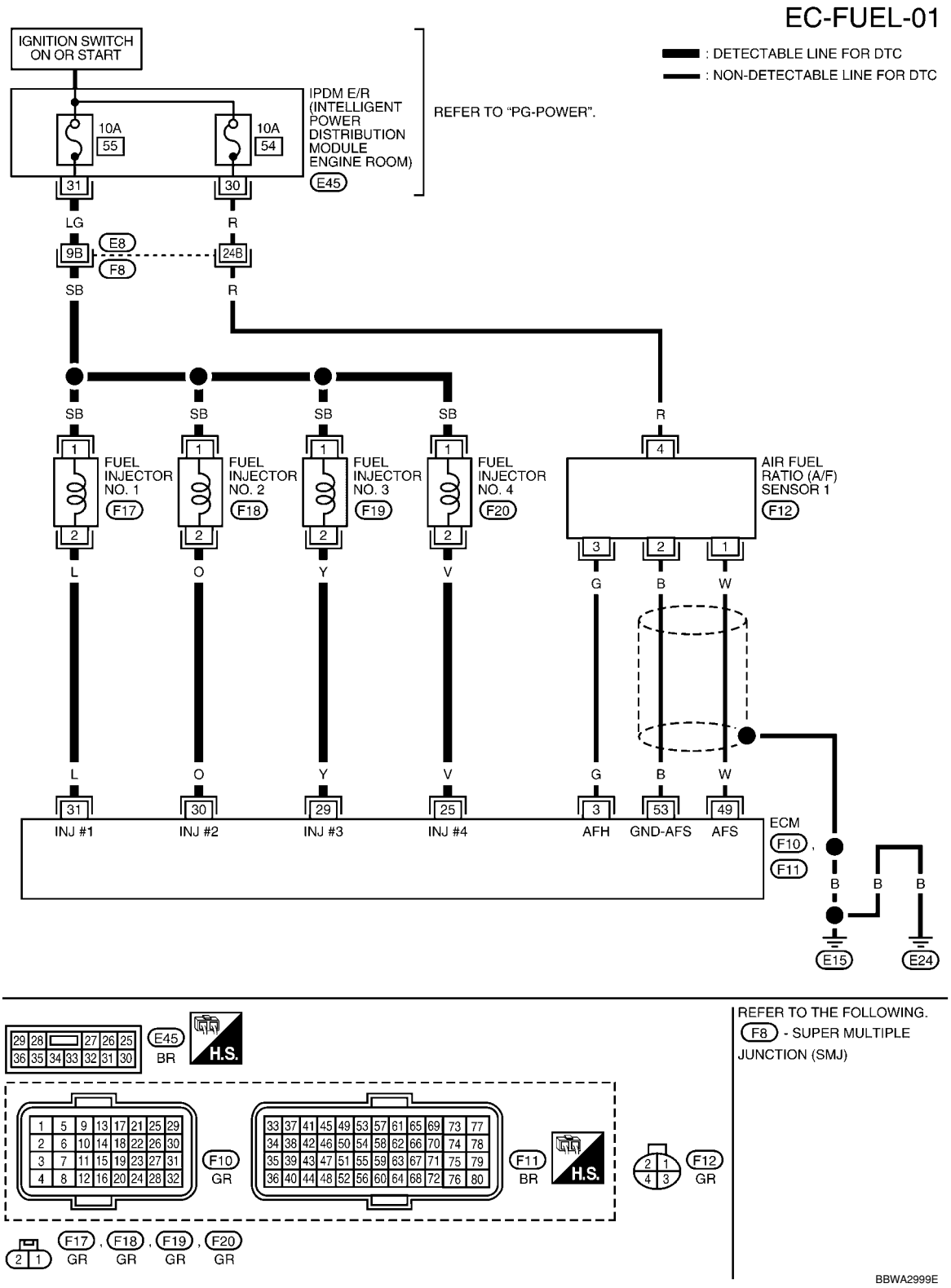

Specification data are reference values and are measured between each terminal and ground.
Pulse signal is measured by CONSULT-II.

CAUTION:

Do not use ECM ground terminals when measuring input/output voltage. Doing so may result in damage to the ECM's transistor. Use a ground other than ECM terminals, such as the ground.

TERMINAL NO.	WIRE COLOR	ITEM	CONDITION	DATA (DC Voltage)
3	G	A/F sensor 1 heater	**[Engine is running]** • **Warm-up condition** • Idle speed (More than 140 seconds after starting engine)	Approximately 2.9 - 8.8V★ 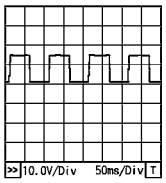 PBIA8148J
25 29 30 31	V Y O L	Fuel injector No. 4 Fuel injector No. 3 Fuel injector No. 2 Fuel injector No. 1	**[Engine is running]** • **Warm-up condition** • Idle speed **NOTE:** The pulse cycle changes depending on rpm at idle	BATTERY VOLTAGE (11 - 14V)★ 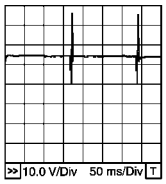 PBIB0529E
			[Engine is running] • **Warm-up condition** • Engine speed: 2,000 rpm	BATTERY VOLTAGE (11 - 14V)★ 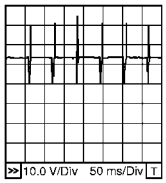 PBIA4943J
49	W	A/F sensor 1	**[Engine is running]** • **Warm-up condition** • Engine speed: 2,000 rpm	Approximately 1.8V Output voltage varies with air fuel ratio.
53	B	A/F sensor 1	**[Ignition switch: ON]**	Approximately 2.2V

★: Average voltage for pulse signal (Actual pulse signal can be confirmed by oscilloscope.)

Diagnosis Procedure

INFOID:0000000001702763

1. CHECK EXHAUST GAS LEAK

1. Start engine and run it at idle.
2. Listen for an exhaust gas leak before three way catalyst (manifold).

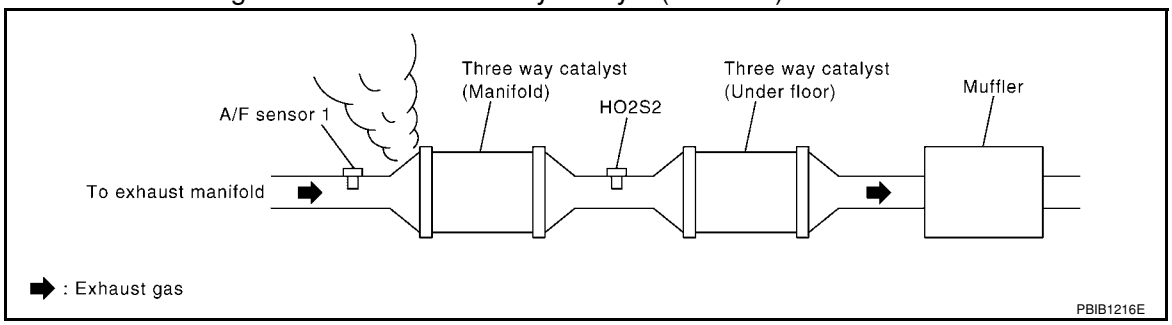

OK or NG

OK >> GO TO 2.
NG >> Repair or replace.

2. CHECK FOR INTAKE AIR LEAK AND PCV HOSE

1. Listen for an intake air leak after the mass air flow sensor.
2. Check PCV hose connection.

OK or NG

OK >> GO TO 3.
NG >> Repair or replace.

3. CHECK AIR FUEL RATIO (A/F) SENSOR 1 CIRCUIT FOR OPEN AND SHORT

1. Turn ignition switch OFF.
2. Disconnect air fuel ratio (A/F) sensor 1 harness connector (1).
- Air fuel ratio (A/F) sensor 1 (2)
3. Disconnect ECM harness connector.
4. Check harness continuity between the following terminals. Refer to Wiring Diagram.

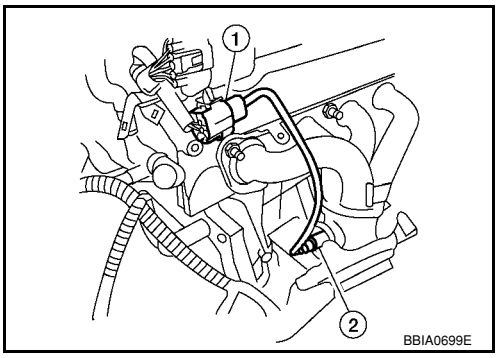

A/F sensor 1 terminal	ECM terminal
1	49
2	53

Continuity should exist.

5. Check harness continuity between ECM terminals 49, 53 or A/F sensor 1 terminals 1, 2 and ground. Refer to Wiring Diagram.

Continuity should not exist.

6. Also check harness for short to power.

OK or NG

OK >> GO TO 4.
NG >> Repair open circuit or short to ground or short to power in harness or connectors.

4. CHECK FUEL PRESSURE

1. Release fuel pressure to zero. Refer to EC-78, "Fuel Pressure Check".
2. Install fuel pressure gauge and check fuel pressure. Refer to EC-78, "Fuel Pressure Check".

At idling: Approximately 350 kPa (3.57 kg/cm^2, 51 psi)

OK or NG

OK >> GO TO 6.
NG >> GO TO 5.

5. DETECT MALFUNCTIONING PART

Check the following.
- Fuel pump and circuit (Refer to EC-526.)
- Fuel pressure regulator (Refer to EC-78, "Fuel Pressure Check".)
- Fuel lines (Refer to EM-33.)
- Fuel filter for clogging

>> Repair or replace.

6. CHECK MASS AIR FLOW SENSOR

With CONSULT-II

1. Install all removed parts.
2. Start engine and warm it up to normal operating temperature.
3. Check “MASS AIR FLOW” in “DATA MONITOR” mode with CONSULT-II.

at idling : 1.0 - 4.0 g·m/sec
at 2,500 rpm : 2.0 - 10.0 g·m/sec

With GST

1. Install all removed parts.
2. Start engine and warm it up to normal operating temperature.
3. Check mass air flow sensor signal in Service $01 with GST.

at idling : 1.0 - 4.0 g·m/sec
at 2,500 rpm : 2.0 - 10.0 g·m/sec

OK or NG

OK >> GO TO 7.
NG >> Check connectors for rusted terminals or loose connections in the mass air flow sensor circuit or ground. Refer to EC-167.

7. CHECK FUNCTION OF FUEL INJECTORS

With CONSULT-II

1. Let engine idle.
2. Perform "POWER BALANCE" in "ACTIVE TEST" mode with CONSULT-II.
3. Make sure that each circuit produces a momentary engine speed drop.

ACTIVE TEST	
POWER BALANCE	
MONITOR	
ENG SPEED	XXX rpm
MAS A/F SE-B1	XXX V

PBIB0133E

Without CONSULT-II

1. Let engine idle.
2. Listen to each fuel injector operating sound.

Clicking noise should be heard.

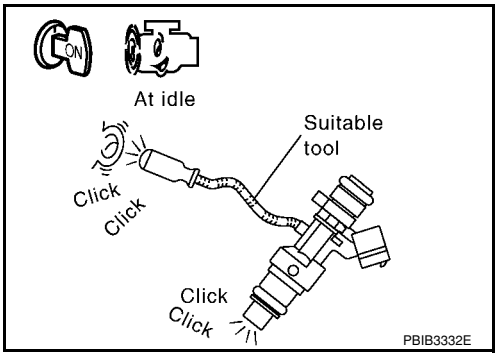

OK or NG

OK >> GO TO 8.
NG >> Perform trouble diagnosis for EC-521.

8. CHECK FUEL INJECTOR

1. Confirm that the engine is cooled down and there are no fire hazards near the vehicle.
2. Turn ignition switch OFF.
3. Reconnect all harness connectors disconnected.
4. Remove fuel tube assembly. Refer to EM-33.
   Keep fuel hose and all fuel injector connected to fuel tube.
   The fuel injector harness connectors should remain connected.
5. Disconnect all ignition coil harness connectors.
6. Prepare pans or saucers under each fuel injector.

7. Crank engine for about 3 seconds. Make sure that fuel sprays out from fuel injectors.

Fuel should be sprayed evenly for each fuel injector.

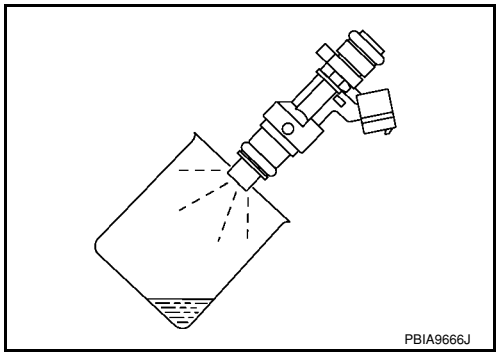

OK or NG

OK >> GO TO 9.
NG >> Replace fuel injectors from which fuel does not spray out. Always replace O-ring with new ones.

9. CHECK INTERMITTENT INCIDENT

Refer to EC-136.

>> **INSPECTION END**

DTC P0172 FUEL INJECTION SYSTEM FUNCTION

On Board Diagnosis Logic

INFOID:0000000001702764

With the Air/Fuel Mixture Ratio Self-Learning Control, the actual mixture ratio can be brought closely to the theoretical mixture ratio based on the mixture ratio feedback signal from the air fuel ratio (A/F) sensor 1. The ECM calculates the necessary compensation to correct the offset between the actual and the theoretical ratios. In case the amount of the compensation value is extremely large (The actual mixture ratio is too rich.), the ECM judges the condition as the fuel injection system malfunction and lights up the MIL (2 trip detection logic).

Sensor	Input Signal to ECM	ECM function	Actuator
Air fuel ratio (A/F) sensor 1	Density of oxygen in exhaust gas (Mixture ratio feedback signal)	Fuel injection control	Fuel injector

DTC No.	Trouble diagnosis name	DTC detecting condition	Possible cause
P0172 0172	Fuel injection system too rich	• Fuel injection system does not operate properly. • The amount of mixture ratio compensation is too large. (The mixture ratio is too rich.)	• Air fuel ratio (A/F) sensor 1 • Fuel injector • Exhaust gas leaks • Incorrect fuel pressure • Mass air flow sensor

DTC Confirmation Procedure

INFOID:0000000001702765

NOTE:
If DTC Confirmation Procedure has been previously conducted, always turn ignition switch OFF and wait at least 10 seconds before conducting the next test.

WITH CONSULT-II

1. Start engine and warm it up to normal operating temperature.
2. Turn ignition switch OFF and wait at least 10 seconds.
3. Turn ignition switch ON and select “SELF-LEARNING CONT” in “WORK SUPPORT” mode with CONSULT-II.
4. Clear the self-learning control coefficient by touching “CLEAR”.
5. Select “DATA MONITOR” mode with CONSULT-II.
6. Start engine again and let it idle for at least 10 minutes.
   The 1st trip DTC P0172 should be detected at this stage, if a malfunction exists. If so, go to EC-267, "Diagnosis Procedure".
   NOTE:
   If 1st trip DTC is not detected during above procedure, performing the following procedure is advised.

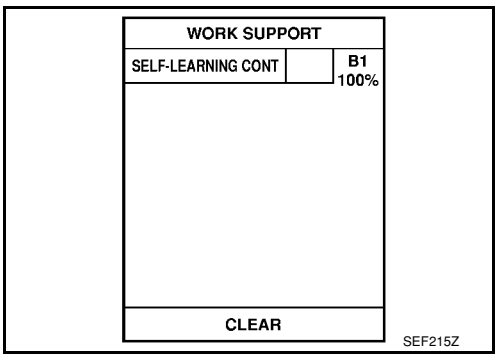

a. Turn ignition switch OFF and wait at least 10 seconds.
b. Start engine and drive the vehicle under the similar conditions to (1st trip) Freeze Frame Data for 10 minutes. Refer to the table below.
   Hold the accelerator pedal as steady as possible.

   The similar conditions to (1st trip) Freeze Frame Data means the vehicle operation that the following conditions should be satisfied at the same time.

Engine speed	Engine speed in the freeze frame data ± 400 rpm
Vehicle speed	Vehicle speed in the freeze frame data ± 10 km/h (6 MPH)

Engine coolant temperature (T) condition	When the freeze frame data shows lower than 70 °C (158 °F), T should be lower than 70 °C (158 °F).
	When the freeze frame data shows higher than or equal to 70 °C (158 °F), T should be higher than or equal to 70 °C (158 °F).

7. If it is difficult to start engine at step 6, the fuel injection system has a malfunction, too.
8. Crank engine while depressing accelerator pedal.
   If engine starts, go to EC-267, "Diagnosis Procedure". If engine does not start, remove ignition plugs and check for fouling, etc.

WITH GST

1. Start engine and warm it up to normal operating temperature.
2. Turn ignition switch OFF and wait at least 10 seconds.
3. Disconnect mass air flow sensor (1) harness connector.
4. Restart engine and let idle for at least 5 seconds.
5. Stop engine and reconnect mass air flow sensor harness connector.
6. Select Service $03 with GST. Make sure DTC P0102 is detected.
7. Select Service $04 with GST and erase the DTC P0102.
8. Start engine again and let it idle for at least 10 minutes.
9. Select Service $07 with GST. The 1st trip DTC P0172 should be detected at this stage, if a malfunction exists. If so, go to EC-267, "Diagnosis Procedure".

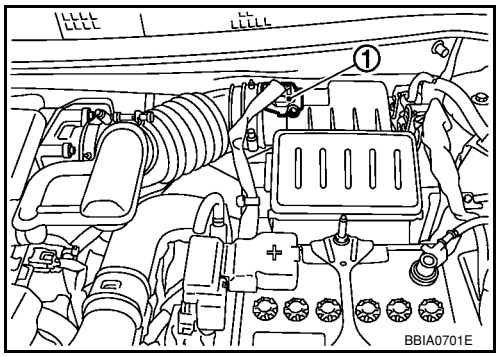

NOTE:
If 1st trip DTC is not detected during above procedure, performing the following procedure is advised.

a. Turn ignition switch OFF and wait at least 10 seconds.
b. Start engine and drive the vehicle under the similar conditions to (1st trip) Freeze Frame Data for 10 minutes. Refer to the table below.
   Hold the accelerator pedal as steady as possible.

   The similar conditions to (1st trip) Freeze Frame Data means the vehicle operation that the following conditions should be satisfied at the same time.

Engine speed	Engine speed in the freeze frame data ± 400 rpm
Vehicle speed	Vehicle speed in the freeze frame data ± 10 km/h (6 MPH)
Engine coolant temperature (T) condition	When the freeze frame data shows lower than 70 °C (158 °F), T should be lower than 70 °C (158 °F).
	When the freeze frame data shows higher than or equal to 70 °C (158 °F), T should be higher than or equal to 70 °C (158 °F).

10. If it is difficult to start engine at step 8, the fuel injection system has a malfunction.
11. Crank engine while depressing accelerator pedal.
    If engine starts, go to EC-267, "Diagnosis Procedure". If engine does not start, remove ignition plugs and check for fouling, etc.

Wiring Diagram

INFOID:0000000001702766

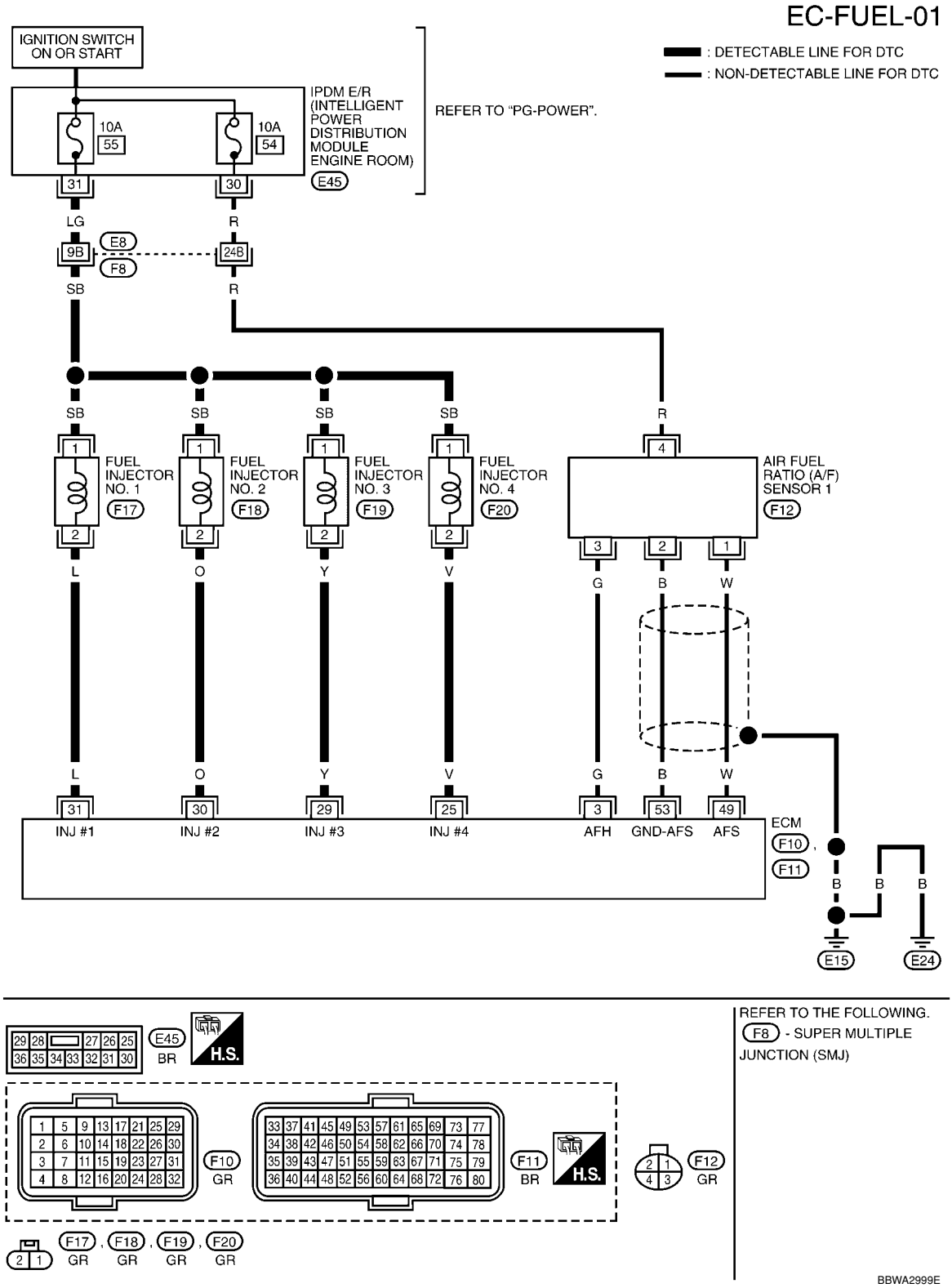

Specification data are reference values and are measured between each terminal and ground.
Pulse signal is measured by CONSULT-II.

CAUTION:

Do not use ECM ground terminals when measuring input/output voltage. Doing so may result in damage to the ECM's transistor. Use a ground other than ECM terminals, such as the ground.

TERMINAL NO.	WIRE COLOR	ITEM	CONDITION	DATA (DC Voltage)
3	G	A/F sensor 1 heater	**[Engine is running]** • **Warm-up condition** • Idle speed (More than 140 seconds after starting engine)	Approximately 2.9 - 8.8V★ 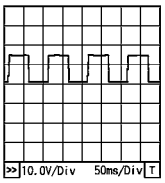 PBIA8148J
25 29 30 31	V Y O L	Fuel injector No. 4 Fuel injector No. 3 Fuel injector No. 2 Fuel injector No. 1	**[Engine is running]** • **Warm-up condition** • Idle speed **NOTE:** The pulse cycle changes depending on rpm at idle	BATTERY VOLTAGE (11 - 14V)★ 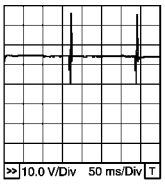 PBIB0529E
			[Engine is running] • **Warm-up condition** • Engine speed: 2,000 rpm	BATTERY VOLTAGE (11 - 14V)★ 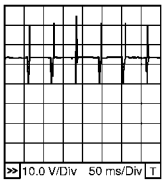 PBIA4943J
49	W	A/F sensor 1	**[Engine is running]** • **Warm-up condition** • Engine speed: 2,000 rpm	Approximately 1.8V Output voltage varies with air fuel ratio.
53	B	A/F sensor 1	**[Ignition switch: ON]**	Approximately 2.2V

★: Average voltage for pulse signal (Actual pulse signal can be confirmed by oscilloscope.)

Diagnosis Procedure

INFOID:0000000001702767

1. CHECK EXHAUST GAS LEAK

1. Start engine and run it at idle.
2. Listen for an exhaust gas leak before three way catalyst (manifold).

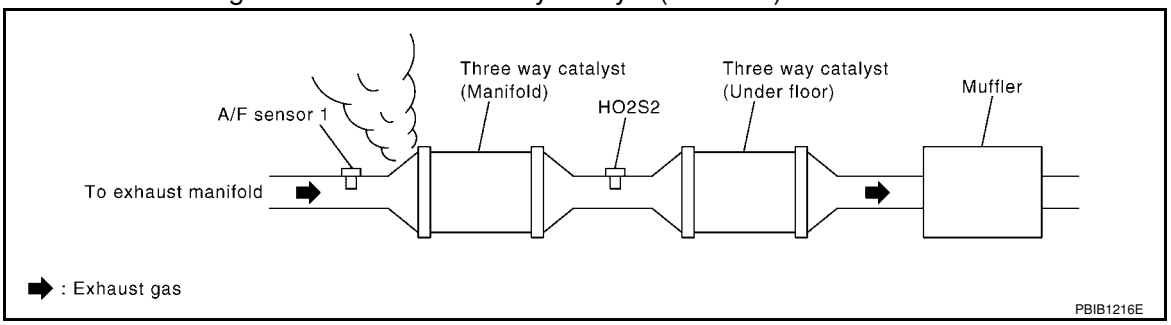

OK or NG

OK >> GO TO 2.
NG >> Repair or replace.

2. CHECK FOR INTAKE AIR LEAK

Listen for an intake air leak after the mass air flow sensor.

OK or NG

OK >> GO TO 3.
NG >> Repair or replace.

3. CHECK AIR FUEL RATIO (A/F) SENSOR 1 CIRCUIT FOR OPEN AND SHORT

1. Turn ignition switch OFF.
2. Disconnect air fuel ratio (A/F) sensor 1 harness connector (1).
- Air fuel ratio (A/F) sensor 1 (2)
3. Disconnect ECM harness connector.
4. Check harness continuity between the following terminals. Refer to Wiring Diagram.

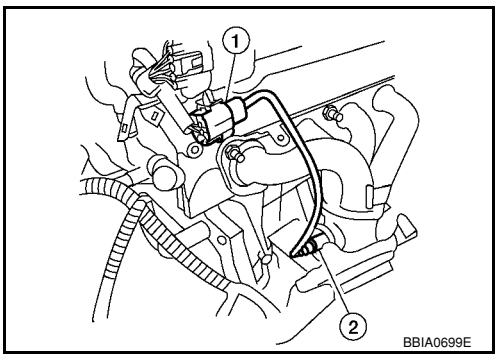

A/F sensor 1 terminal	ECM terminal
1	49
2	53

Continuity should exist.

5. Check harness continuity between ECM terminals 49, 53 or A/F sensor 1 terminals 1, 2 and ground. Refer to Wiring Diagram.

Continuity should not exist.

6. Also check harness for short to power.

OK or NG

OK >> GO TO 4.
NG >> Repair open circuit or short to ground or short to power in harness or connectors.

4. CHECK FUEL PRESSURE

1. Release fuel pressure to zero. Refer to EC-78, "Fuel Pressure Check".
2. Install fuel pressure gauge and check fuel pressure. Refer to EC-78, "Fuel Pressure Check".

At idling: Approximately 350 kPa (3.57 kg/cm2, 51 psi)

OK or NG

OK >> GO TO 6.
NG >> GO TO 5.

5. DETECT MALFUNCTIONING PART

Check the following.
- Fuel pump and circuit (Refer to EC-526.)
- Fuel pressure regulator (Refer to EC-78, "Fuel Pressure Check".)

>> Repair or replace.

6. CHECK MASS AIR FLOW SENSOR

With CONSULT-II

1. Install all removed parts.
2. Start engine and warm it up to normal operating temperature.
3. Check “MASS AIR FLOW” in “DATA MONITOR” mode with CONSULT-II.

at idling : 1.0 - 4.0 g·m/sec
at 2,500 rpm : 2.0 - 10.0 g·m/sec

With GST

1. Install all removed parts.
2. Start engine and warm it up to normal operating temperature.
3. Check mass air flow sensor signal in Service $01 with GST.

at idling : 1.0 - 4.0 g·m/sec
at 2,500 rpm : 2.0 - 10.0 g·m/sec

OK or NG

OK >> GO TO 7.
NG >> Check connectors for rusted terminals or loose connections in the mass air flow sensor circuit or ground. Refer to EC-167.

7. CHECK FUNCTION OF FUEL INJECTORS

With CONSULT-II

1. Let engine idle.
2. Perform "POWER BALANCE" in "ACTIVE TEST" mode with CONSULT-II.
3. Make sure that each circuit produces a momentary engine speed drop.

ACTIVE TEST	
POWER BALANCE	
MONITOR	
ENG SPEED	XXX rpm
MAS A/F SE-B1	XXX V

PBIB0133E

Without CONSULT-II

1. Let engine idle.
2. Listen to each fuel injector operating sound.

Clicking noise should be heard.

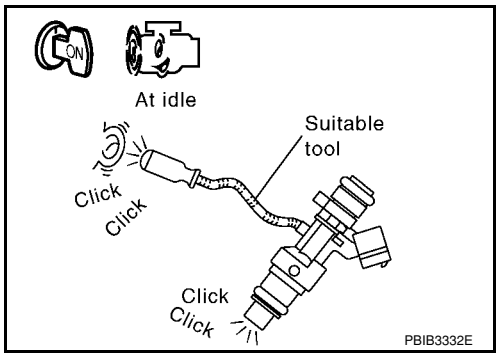

PBIB3332E

OK or NG

OK >> GO TO 8.
NG >> Perform trouble diagnosis for EC-521.

8. CHECK FUEL INJECTOR

1. Remove fuel injector assembly. Refer to EM-33.
   Keep fuel hose and all fuel injector connected to fuel tube.
2. Confirm that the engine is cooled down and there are no fire hazards near the vehicle.
3. Reconnect all harness connectors disconnected.
4. Disconnect all ignition coil harness connectors.
5. Prepare pans or saucers under each fuel injector.
6. Crank engine for about 3 seconds.
   Make sure fuel does not drip from fuel injector.

OK or NG

OK (Does not drip.)>>GO TO 9.
NG (Drips.)>>Replace the fuel injectors from which fuel is dripping. Always replace O-ring with new one.

9. CHECK INTERMITTENT INCIDENT

Refer to EC-136.

>> **INSPECTION END**

DTC P0181 FTT SENSOR

Component Description

INFOID:0000000001702768

The fuel tank temperature sensor (4) is used to detect the fuel temperature inside the fuel tank. The sensor modifies a voltage signal from the ECM. The modified signal returns to the ECM as the fuel temperature input. The sensor uses a thermistor which is sensitive to the change in temperature. The electrical resistance of the thermistor decreases as temperature increases.

- Fuel level sensor unit and fuel pump (1)
- Fuel pressure regulator (2)
- Fuel level sensor (3)

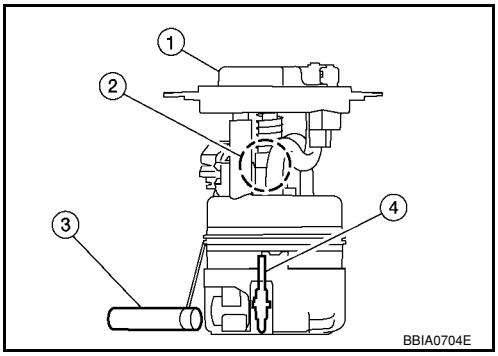

<Reference data>

Fluid temperature °C (°F)	Voltage* V	Resistance kΩ
20 (68)	3.5	2.3 - 2.7
50 (122)	2.2	0.79 - 0.90

*: This data is reference values and is measured between ECM terminal 43 (Fuel tank temperature sensor) and ground.

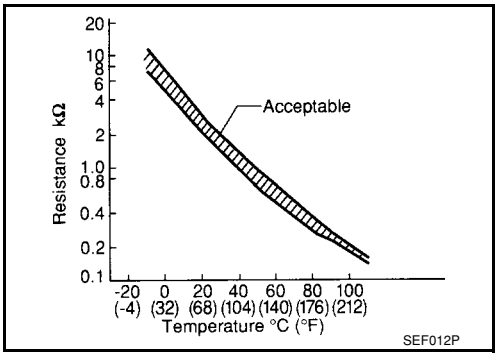

CAUTION:

Do not use ECM ground terminals when measuring input/output voltage. Doing so may result damage the ECM's transistor. Use ground other than ECM, such as ground.

On Board Diagnosis Logic

INFOID:0000000001702769

DTC No.	Trouble diagnosis name	DTC detecting condition	Possible cause
P0181 0181	Fuel tank temperature sensor circuit range/performance	Rationally incorrect voltage from the sensor is sent to ECM, compared with the voltage signals from engine coolant temperature sensor and intake air temperature sensor.	• Harness or connectors (Fuel tank temperature sensor circuit is open or shorted) • Fuel tank temperature sensor

DTC Confirmation Procedure

INFOID:0000000001702770

NOTE:

If DTC Confirmation Procedure has been previously conducted, always turn ignition switch OFF and wait at least 10 seconds before conducting the next test.

WITH CONSULT-II

1. Turn ignition switch ON.
2. Select “DATA MONITOR” mode with CONSULT-II.
3. Wait at least 10 seconds.
   If the result is NG, go to EC-271, "Diagnosis Procedure".
   If the result is OK, go to following step.
4. Check “COOLAN TEMP/S” value.
   If the “COOLAN TEMP/S” is less than 60°C (140°F), the result will be OK.
   If the “COOLAN TEMP/S” is above 60°C (140°F), go to the following step.
5. Cool engine down until “COOLAN TEMP/S” signal is less than 60°C (140°F).
6. Wait at least 10 seconds.
7. If 1st trip DTC is detected, go to EC-271, "Diagnosis Procedure".

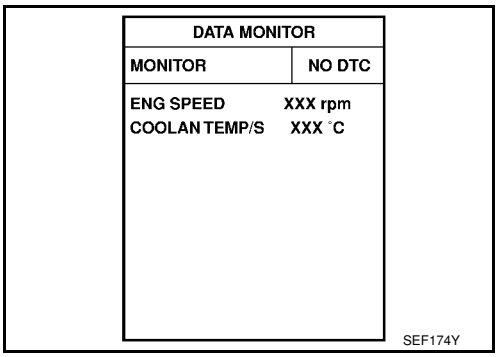

WITH GST

Follow the procedure “WITH CONSULT-II” above.

Wiring Diagram

INFOID:0000000001702771

EC-FTTS-01

: DETECTABLE LINE FOR DTC
: NON-DETECTABLE LINE FOR DTC

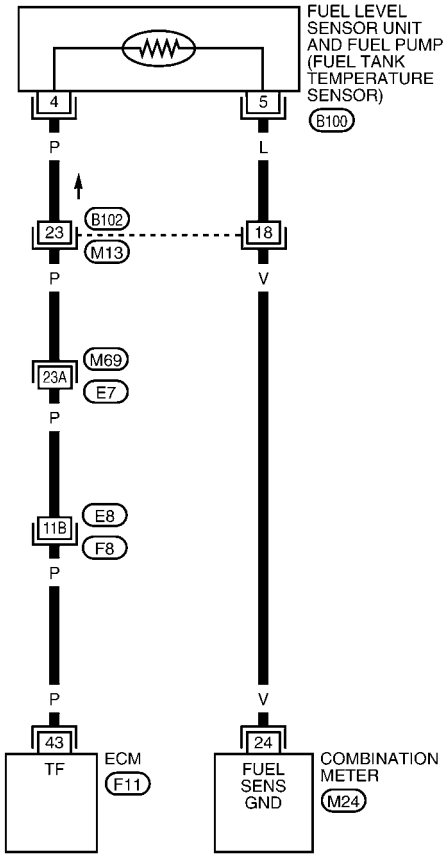

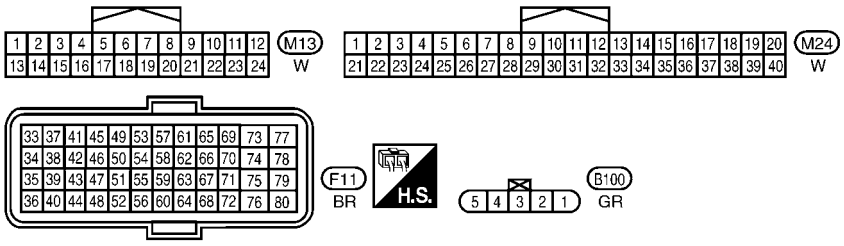

REFER TO THE FOLLOWING.
M69 , F8 - SUPER MULTIPLE JUNCTION (SMJ)

BBWA2636E

Diagnosis Procedure

INFOID:0000000001702772

1.CHECK GROUND CONNECTIONS

1. Turn ignition switch OFF.
2. Loosen and retighten ground screw on the body.
   Refer to EC-142, "Ground Inspection".

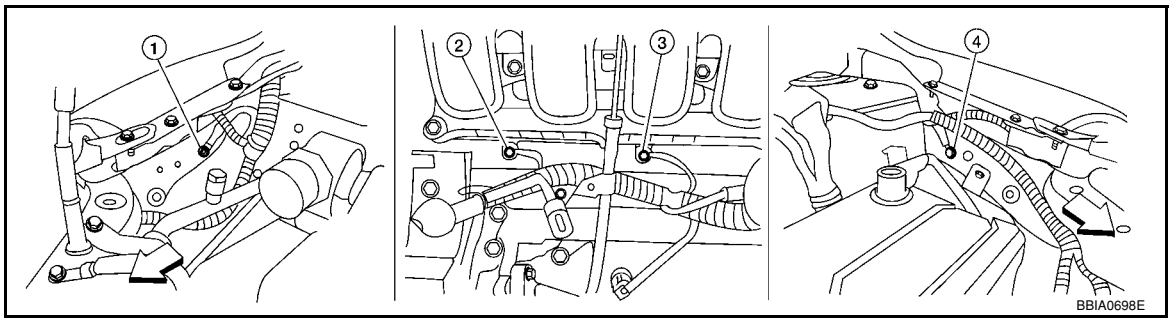

⇦: Vehicle front

1. Body ground E24
2. Engine ground F9
3. Engine ground F16
4. Body ground E15

OK or NG

OK >> GO TO 2.
NG >> Repair or replace ground connections.

2. CHECK FUEL TANK TEMPERATURE SENSOR POWER SUPPLY CIRCUIT

1. Turn ignition switch OFF.
2. Disconnect “fuel level sensor unit and fuel pump” harness connector (1).
- ⇦: Vehicle front
3. Turn ignition switch ON.

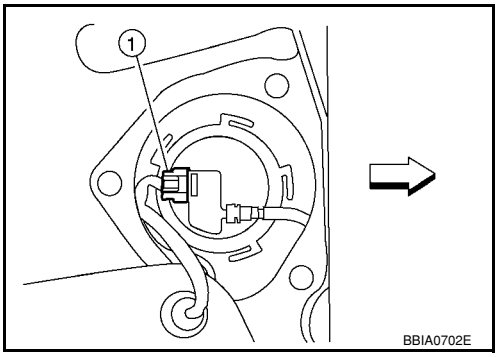

4. Check voltage between “fuel level sensor unit and fuel pump” terminal 4 and ground with CONSULT-II or tester.

Voltage: Approximately 5V

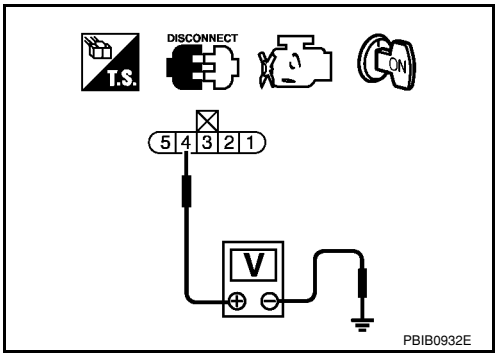

OK or NG

OK >> GO TO 4.
NG >> GO TO 3.

3. DETECT MALFUNCTIONING PART

Check the following.
- Harness connectors E8, F8
- Harness connectors M69, E7
- Harness connectors B102, M13
- Harness for open or short between ECM and “fuel level sensor unit and fuel pump”

>> Repair open circuit or short to ground or short to power in harness or connector.

4. CHECK FUEL TANK TEMPERATURE SENSOR GROUND CIRCUIT FOR OPEN AND SHORT

1. Turn ignition switch OFF.
2. Check harness continuity between “fuel level sensor unit and fuel pump” terminal 5 and combination meter terminal 24. Refer to Wiring Diagram.

Continuity should exist.

3. Also check harness for short to ground and short to power.

OK or NG

OK >> GO TO 6.
NG >> GO TO 5.

5. DETECT MALFUNCTIONING PART

Check the following.
- Harness connectors B102, M13
- Harness for open or short between “fuel level sensor unit and fuel pump” and ground.

>> Repair open circuit or short to ground or short to power in harness or connectors.

6. CHECK FUEL TANK TEMPERATURE SENSOR

Refer to, EC-273, "Component Inspection".

OK or NG

OK >> GO TO 7.
NG >> Replace “fuel level sensor unit and fuel pump”.

7. CHECK INTERMITTENT INCIDENT

Perform EC-136.

>> **INSPECTION END**

Component Inspection

INFOID:0000000001702773

FUEL TANK TEMPERATURE SENSOR

1. Check resistance between “fuel level sensor unit and fuel pump” terminal 4 and 5 by heating with hot water as shown in the figure.

Temperature °C (°F)	Resistance kΩ
20 (68)	2.3 - 2.7
50 (122)	0.79 - 0.90

2. If NG, replace “fuel level sensor unit and fuel pump”.

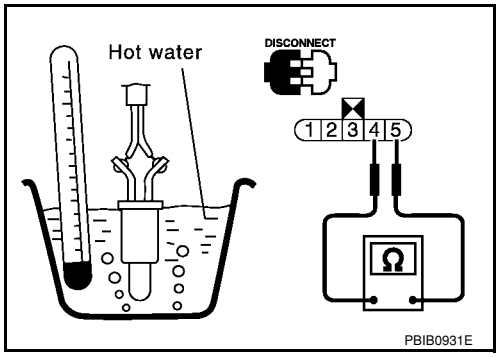

Removal and Installation

INFOID:0000000001702774

FUEL TANK TEMPERATURE SENSOR

Refer to FL-5.

DTC P0182, P0183 FTT SENSOR

Component Description

INFOID:0000000001702775

The fuel tank temperature sensor (4) is used to detect the fuel temperature inside the fuel tank. The sensor modifies a voltage signal from the ECM. The modified signal returns to the ECM as the fuel temperature input. The sensor uses a thermistor which is sensitive to the change in temperature. The electrical resistance of the thermistor decreases as temperature increases.

- Fuel level sensor unit and fuel pump (1)
- Fuel pressure regulator (2)
- Fuel level sensor (3)

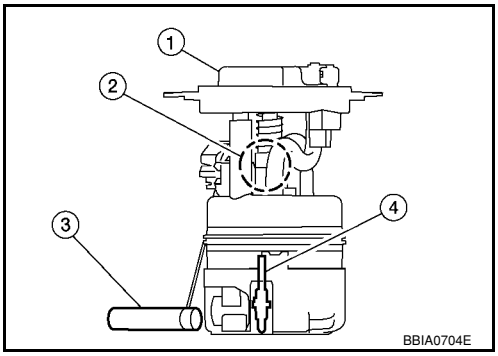

<Reference data>

Fluid temperature °C (°F)	Voltage* V	Resistance kΩ
20 (68)	3.5	2.3 - 2.7
50 (122)	2.2	0.79 - 0.90

*: This data is reference values and is measured between ECM terminal 43 (Fuel tank temperature sensor) and ground.

CAUTION:

Do not use ECM ground terminals when measuring input/output voltage. Doing so may result damage the ECM's transistor. Use ground other than ECM, such as ground.

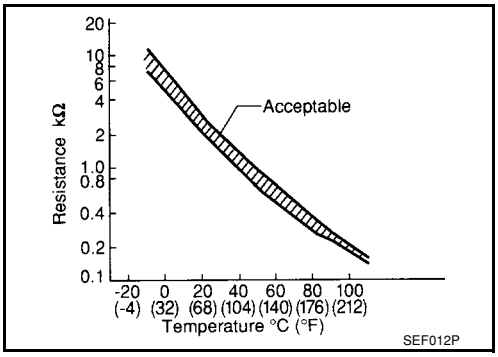

On Board Diagnosis Logic

INFOID:0000000001702776

DTC No.	Trouble diagnosis name	DTC detecting condition	Possible cause
P0182 0182	Fuel tank temperature sensor circuit low input	An excessively low voltage from the sensor is sent to ECM.	• Harness or connectors (Fuel tank temperature sensor circuit is open or shorted.) • Fuel tank temperature sensor
P0183 0183	Fuel tank temperature sensor circuit high input	An excessively high voltage from the sensor is sent to ECM.	

DTC Confirmation Procedure

INFOID:0000000001702777

NOTE:

If DTC Confirmation Procedure has been previously conducted, always turn ignition switch OFF and wait at least 10 seconds before conducting the next test.

WITH CONSULT-II

1. Turn ignition switch ON.
2. Select “DATA MONITOR” mode with CONSULT-II.
3. Wait at least 5 seconds.
4. If 1st trip DTC is detected, go to EC-275, "Diagnosis Procedure".

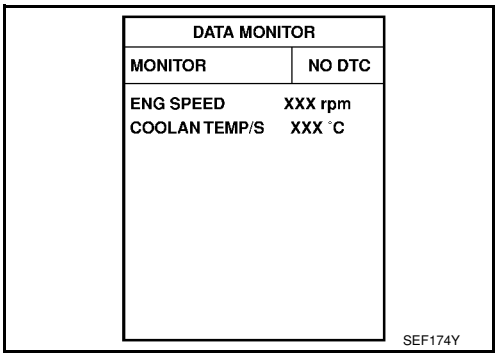

WITH GST

Follow the procedure “WITH CONSULT-II” above.

Wiring Diagram

INFOID:0000000001702778

EC-FTTS-01

: DETECTABLE LINE FOR DTC
: NON-DETECTABLE LINE FOR DTC

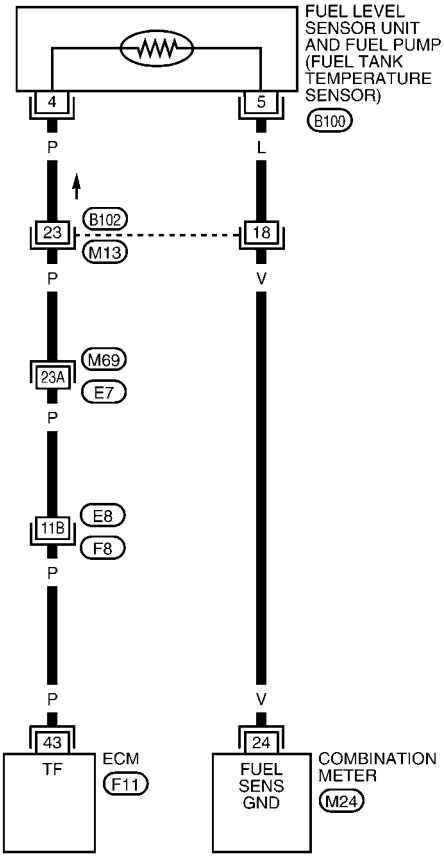

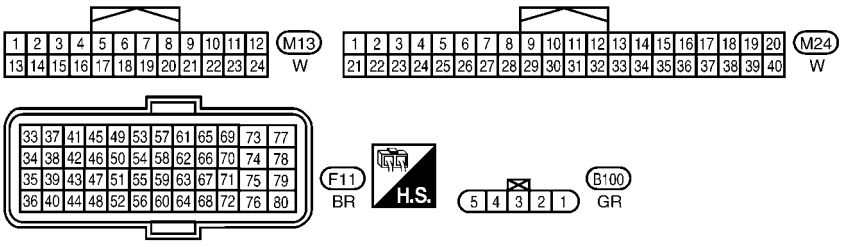

REFER TO THE FOLLOWING.
M69 , F8 - SUPER MULTIPLE JUNCTION (SMJ)

BBWA2636E

Diagnosis Procedure

INFOID:0000000001702779

1. CHECK GROUND CONNECTIONS

1. Turn ignition switch OFF.
2. Loosen and retighten ground screw on the body.
   Refer to EC-142, "Ground Inspection".

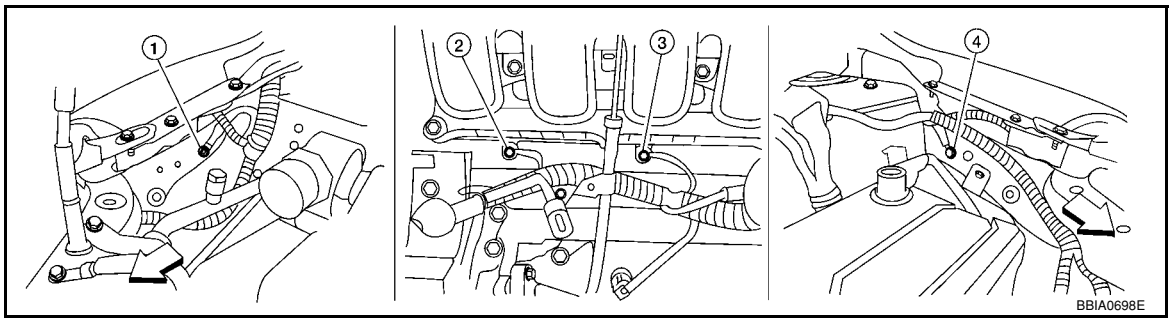

⇦: Vehicle front

1. Body ground E24
2. Engine ground F9
3. Engine ground F16
4. Body ground E15

OK or NG

OK >> GO TO 2.
NG >> Repair or replace ground connections.

2. CHECK FUEL TANK TEMPERATURE SENSOR POWER SUPPLY CIRCUIT

1. Disconnect “fuel level sensor unit and fuel pump” harness connector (1).
- ⇦: Vehicle front
2. Turn ignition switch ON.

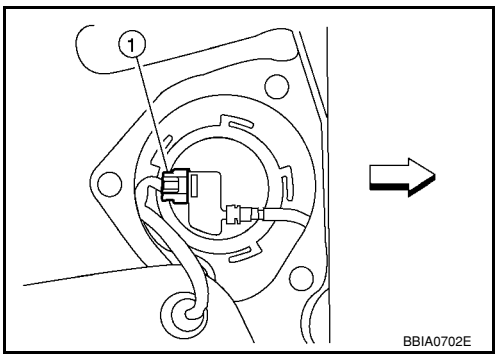

3. Check voltage between “fuel level sensor unit and fuel pump” terminal 4 and ground with CONSULT-II or tester.

Voltage: Approximately 5V

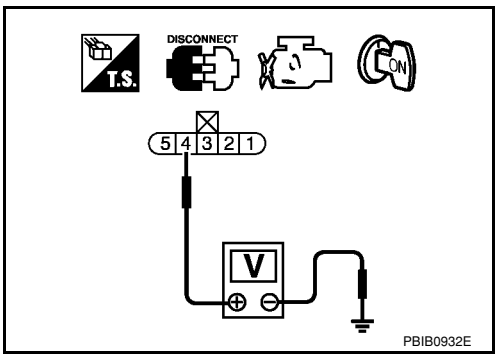

OK or NG

OK >> GO TO 4.
NG >> GO TO 3.

3. DETECT MALFUNCTIONING PART

Check the following.
- Harness connectors E8, F8
- Harness connectors M69, E7
- Harness connectors B102, M13
- Harness for open or short to ground or short between ECM and “fuel level sensor unit and fuel pump”

>> Repair open circuit or short to ground or short to power in harness or connector.

4. CHECK FUEL TANK TEMPERATURE SENSOR GROUND CIRCUIT FOR OPEN AND SHORT

1. Turn ignition switch OFF.

2. Check harness continuity between “fuel level sensor unit and fuel pump” terminal 5 and combination meter terminal 24. Refer to Wiring Diagram.

Continuity should exist.

3. Also check harness for short to ground and short to power.

OK or NG

OK >> GO TO 6.
NG >> GO TO 5.

5. DETECT MALFUNCTIONING PART

Check the following.
- Harness connectors B102, M13
- Harness for open or short between “fuel level sensor unit and fuel pump” and ground

>> Repair open circuit or short to ground or short to power in harness or connector.

6. CHECK FUEL TANK TEMPERATURE SENSOR

Refer to, EC-277, "Component Inspection".

OK or NG

OK >> GO TO 7.
NG >> Replace “fuel level sensor unit and fuel pump”.

7. CHECK INTERMITTENT INCIDENT

Perform EC-136.

>> **INSPECTION END**

Component Inspection

INFOID:0000000001702780

FUEL TANK TEMPERATURE SENSOR

1. Check resistance between “fuel level sensor unit and fuel pump” terminal 4 and 5 by heating with hot water as shown in the figure.

Temperature °C (°F)	Resistance kΩ
20 (68)	2.3 - 2.7
50 (122)	0.79 - 0.90

2. If NG, replace “fuel level sensor unit and fuel pump”.

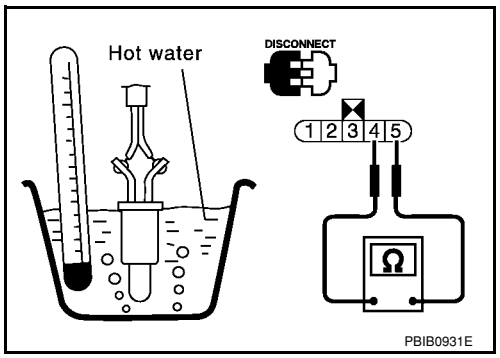

Removal and Installation

INFOID:0000000001702781

FUEL TANK TEMPERATURE SENSOR

Refer to FL-5.

DTC P0222, P0223 TP SENSOR

Component Description

INFOID:0000000001702782

Electric throttle control actuator consists of throttle control motor, throttle position sensor, etc. The throttle position sensor responds to the throttle valve movement.
The throttle position sensor has two sensors. These sensors are a kind of potentiometers which transform the throttle valve position into output voltage, and emit the voltage signal to the ECM. In addition, these sensors detect the opening and closing speed of the throttle valve and feed the voltage signals to the ECM. The ECM judges the current opening angle of the throttle valve from these signals and the ECM controls the throttle control motor to make the throttle valve opening angle properly in response to driving condition.

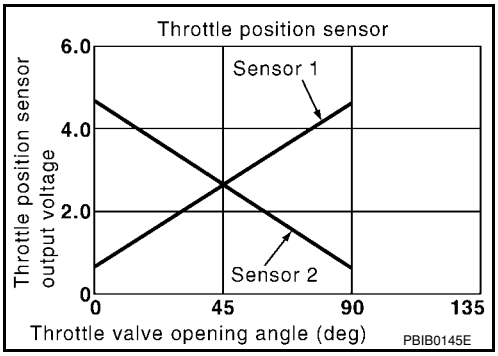

CONSULT-II Reference Value in Data Monitor Mode

INFOID:0000000001702783

Specification data are reference values.

MONITOR ITEM	CONDITION		SPECIFICATION
THRTL SEN 1 THRTL SEN 2*	• Ignition switch: ON (Engine stopped) • Shift lever: D (A/T, CVT), 1st (M/T)	Accelerator pedal: Fully released	More than 0.36V
		Accelerator pedal: Fully depressed	Less than 4.75V

*: Throttle position sensor 2 signal is converted by ECM internally. Thus, it differs from ECM terminal voltage signal.

On Board Diagnosis Logic

INFOID:0000000001702784

These self-diagnoses have the one trip detection logic.
NOTE:
If DTC P0222 or P0223 is displayed with DTC P0643, first perform the trouble diagnosis for DTC P0643. Refer to EC-400.

DTC No.	Trouble diagnosis name	DTC detecting condition	Possible cause
P0222 0222	Throttle position sensor 1 circuit low input	An excessively low voltage from the TP sensor 1 is sent to ECM.	• Harness or connectors (TP sensor 1 circuit is open or shorted.) (APP sensor 2 circuit is shorted.) • Electric throttle control actuator (TP sensor 1) • Accelerator pedal position sensor (APP sensor 2)
P0223 0223	Throttle position sensor 1 circuit high input	An excessively high voltage from the TP sensor 1 is sent to ECM.	

FAIL-SAFE MODE

When the malfunction is detected, the ECM enters fail-safe mode and the MIL lights up.

Engine operation condition in fail-safe mode
The ECM controls the electric throttle control actuator in regulating the throttle opening in order for the idle position to be within +10 degrees. The ECM regulates the opening speed of the throttle valve to be slower than the normal condition. So, the acceleration will be poor.

DTC Confirmation Procedure

INFOID:0000000001702785

NOTE:
If DTC Confirmation Procedure has been previously conducted, always turn ignition switch OFF and wait at least 10 seconds before conducting the next test.
TESTING CONDITION:
Before performing the following procedure, confirm that battery voltage is more than 8V at idle.

WITH CONSULT-II

1. Turn ignition switch ON.
2. Select “DATA MONITOR” mode with CONSULT-II.
3. Start engine and let it idle for 1 second.
4. If DTC is detected, go to EC-281, "Diagnosis Procedure".

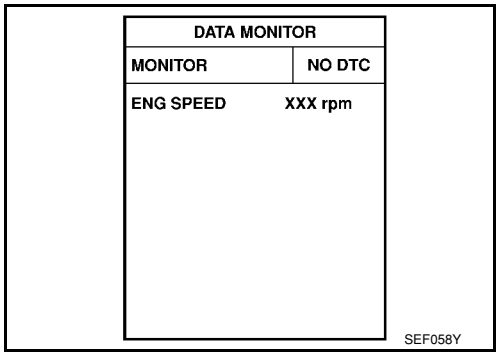

WITH GST

Follow the procedure “WITH CONSULT-II” above.

Wiring Diagram

INFOID:0000000001702786

EC-TPS1-01

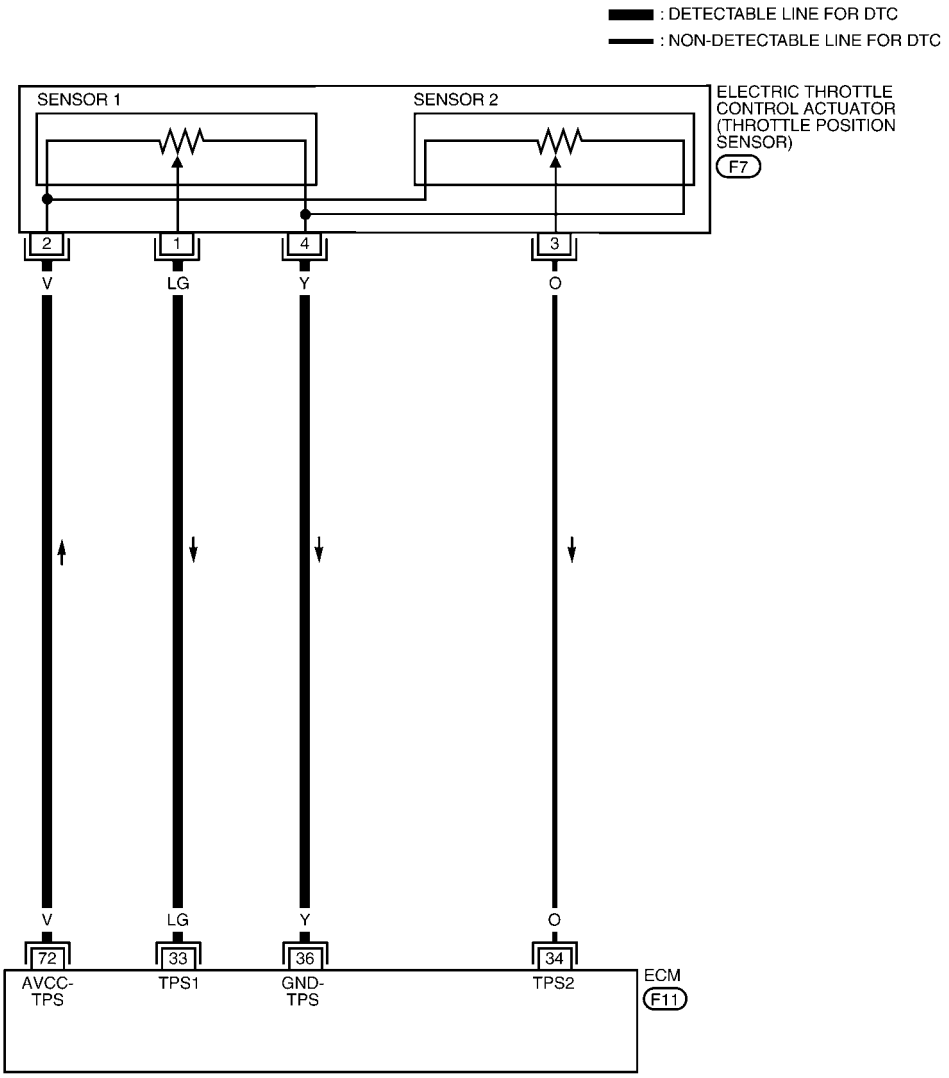

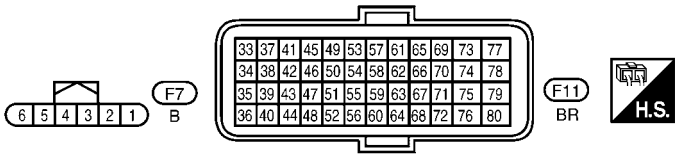

BBWA2655E

Specification data are reference values and are measured between each terminal and ground.

CAUTION:

Do not use ECM ground terminals when measuring input/output voltage. Doing so may result in damage to the ECM's transistor. Use a ground other than ECM terminals, such as the ground.

TERMINAL NO.	WIRE COLOR	ITEM	CONDITION	DATA (DC Voltage)
33	LG	Throttle position sensor 1	**[Ignition switch: ON]** • Engine stopped • Shift lever: D (A/T, CVT), 1st (M/T) • Accelerator pedal: Fully released	More than 0.36V
			[Ignition switch: ON] • Engine stopped • Shift lever: D (A/T, CVT), 1st (M/T) • Accelerator pedal: Fully depressed	Less than 4.75V
34	O	Throttle position sensor 2	**[Ignition switch: ON]** • Engine stopped • Shift lever: D (A/T, CVT), 1st (M/T) • Accelerator pedal: Fully released	Less than 4.75V
			[Ignition switch: ON] • Engine stopped • Shift lever: D (A/T, CVT), 1st (M/T) • Accelerator pedal: Fully depressed	More than 0.36V
36	Y	Sensor ground (Throttle position sensor)	**[Engine is running]** • **Warm-up condition** • Idle speed	Approximately 0V
72	V	Sensor power supply (Throttle position sensor)	**[Ignition switch: ON]**	Approximately 5V

Diagnosis Procedure

INFOID:0000000001702787

1. CHECK GROUND CONNECTIONS

1. Turn ignition switch OFF.
2. Loosen and retighten ground screw on the body.
   Refer to EC-142, "Ground Inspection".

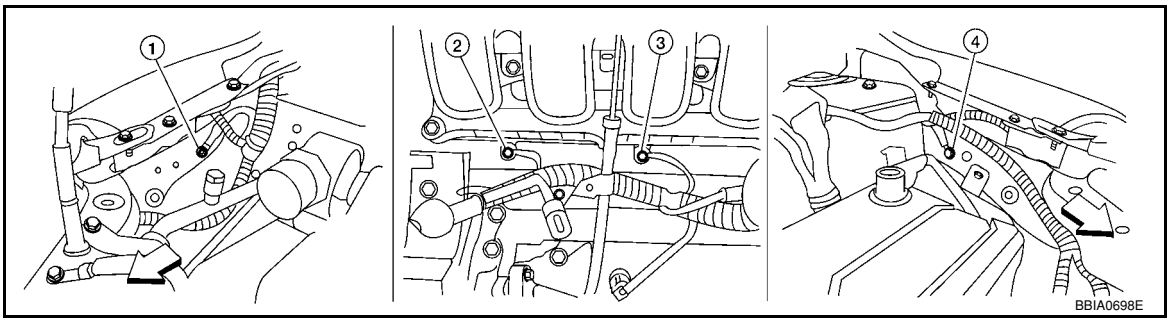

⇦: Vehicle front

1. Body ground E24
2. Engine ground F9
3. Engine ground F16
4. Body ground E15

OK or NG

OK >> GO TO 2.
NG >> Repair or replace ground connections.

2. CHECK THROTTLE POSITION SENSOR 1 POWER SUPPLY CIRCUIT-I

1. Disconnect electric throttle control actuator (1) harness connector.
- ⇦: Vehicle front
2. Turn ignition switch ON.

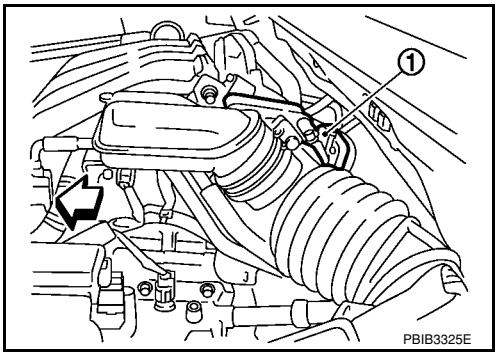

3. Check voltage between electric throttle control actuator terminal 2 and ground with CONSULT-II or tester.

Voltage: Approximately 5V

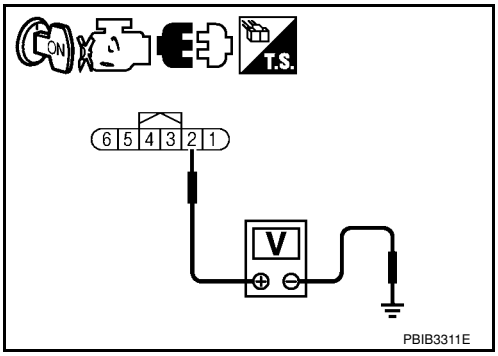

OK or NG

OK >> GO TO 3.
NG >> Repair open circuit or short to ground or short to power in harness connectors.

3. CHECK THROTTLE POSITION SENSOR 1 GROUND CIRCUIT FOR OPEN AND SHORT

1. Turn ignition switch OFF.
2. Disconnect ECM harness connector.
3. Check harness continuity between ECM terminal 36 and electric throttle control actuator terminal 4. Refer to Wiring Diagram.

Continuity should exist.

4. Also check harness for short to ground or short to power.

OK or NG

OK >> GO TO 4.
NG >> Repair open circuit or short to ground or short to power in harness or connectors.

4. CHECK THROTTLE POSITION SENSOR 1 INPUT SIGNAL CIRCUIT FOR OPEN AND SHORT

1. Check harness continuity between ECM terminal 33 and electric throttle control actuator terminal 1. Refer to Wiring Diagram.

Continuity should exist.

2. Also check harness for short to ground and short to power.

OK or NG

OK >> GO TO 5.
NG >> Repair open circuit or short to ground or short to power in harness or connectors.

5. CHECK THROTTLE POSITION SENSOR

Refer to EC-283, "Component Inspection".

OK or NG

OK >> GO TO 7.
NG >> GO TO 6.

6. REPLACE ELECTRIC THROTTLE CONTROL ACTUATOR

1. Replace the electric throttle control actuator.
2. Perform EC-76, "Throttle Valve Closed Position Learning".
3. Perform EC-76, "Idle Air Volume Learning".

>> **INSPECTION END**

7. CHECK INTERMITTENT INCIDENT

Refer to EC-136.

>> **INSPECTION END**

Component Inspection

INFOID:0000000001702788

THROTTLE POSITION SENSOR

1. Reconnect all harness connectors disconnected.
2. Perform EC-76, "Throttle Valve Closed Position Learning".
3. Turn ignition switch ON.
4. Set shift lever to D position (A/T, CVT) or 1st position (M/T).
5. Check voltage between ECM terminals 33 (TP sensor 1 signal), 34 (TP sensor 2 signal) and ground under the following conditions.

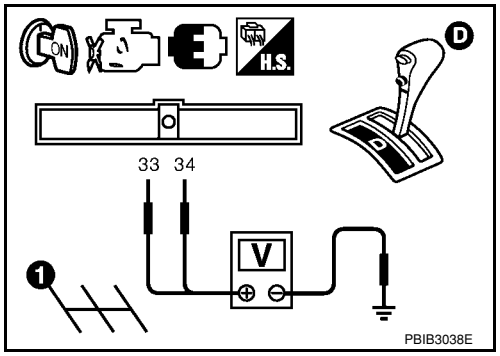

Terminal	Accelerator pedal	Voltage
33 (Throttle position sensor 1)	Fully released	More than 0.36V
	Fully depressed	Less than 4.75V
34 (Throttle position sensor 2)	Fully released	Less than 4.75V
	Fully depressed	More than 0.36V

6. If NG, replace electric throttle control actuator and go to the next step.
7. Perform EC-76, "Throttle Valve Closed Position Learning".
8. Perform EC-76, "Idle Air Volume Learning".

Removal and Installation

INFOID:0000000001702789

ELECTRIC THROTTLE CONTROL ACTUATOR

Refer to EM-18.

DTC P0300 - P0304 MULTIPLE CYLINDER MISFIRE, NO. 1 - 4 CYLINDER MISFIRE

On Board Diagnosis Logic

INFOID:0000000001702790

When a misfire occurs, engine speed will fluctuate. If the engine speed fluctuates enough to cause the crankshaft position (CKP) sensor (POS) signal to vary, ECM can determine that a misfire is occurring.

Sensor	Input Signal to ECM	ECM function
Crankshaft position sensor (POS)	Engine speed	On board diagnosis of misfire

The misfire detection logic consists of the following two conditions.

1. One Trip Detection Logic (Three Way Catalyst Damage)
   On the 1st trip that a misfire condition occurs that can damage the three way catalyst (TWC) due to overheating, the MIL will blink.
   When a misfire condition occurs, the ECM monitors the CKP sensor (POS) signal every 200 engine revolutions for a change.
   When the misfire condition decreases to a level that will not damage the TWC, the MIL will turn off.
   If another misfire condition occurs that can damage the TWC on a second trip, the MIL will blink.
   When the misfire condition decreases to a level that will not damage the TWC, the MIL will remain on.
   If another misfire condition occurs that can damage the TWC, the MIL will begin to blink again.
2. Two Trip Detection Logic (Exhaust quality deterioration)
   For misfire conditions that will not damage the TWC (but will affect vehicle emissions), the MIL will only light when the misfire is detected on a second trip. During this condition, the ECM monitors the CKP sensor signal every 1,000 engine revolutions.
   A misfire malfunction can be detected on any one cylinder or on multiple cylinders.

DTC No.	Trouble diagnosis name	DTC detecting condition	Possible cause
P0300 0300	Multiple cylinder misfire detected	Multiple cylinder misfire.	• Improper spark plug • Insufficient compression • Incorrect fuel pressure • Fuel injector circuit is open or shorted • Fuel injector • Intake air leak • The ignition signal circuit is open or shorted • Lack of fuel • Drive plate or flywheel • Air fuel ratio (A/F) sensor 1 • Incorrect PCV hose connection
P0301 0301	No.1 cylinder misfire detected	No. 1 cylinder misfires.	
P0302 0302	No. 2 cylinder misfire detected	No. 2 cylinder misfires.	
P0303 0303	No. 3 cylinder misfire detected	No. 3 cylinder misfires.	
P0304 0304	No. 4 cylinder misfire detected	No. 4 cylinder misfires.	

DTC Confirmation Procedure

INFOID:0000000001702791

CAUTION:
Always drive vehicle in safe manner according to traffic conditions and obey all traffic laws when driving.
NOTE:
If DTC Confirmation Procedure has been previously conducted, always turn ignition switch OFF and wait at least 10 seconds before conducting the next test.

WITH CONSULT-II

1. Turn ignition switch ON and select “DATA MONITOR” mode with CONSULT-II.
2. Start engine and warm it up to normal operating temperature.
3. Turn ignition switch OFF and wait at least 10 seconds.
4. Restart engine and let it idle for about 15 minutes.
5. If 1st trip DTC is detected, go to EC-285, "Diagnosis Procedure".
   NOTE:
   If 1st trip DTC is not detected during above procedure, performing the following procedure is advised.

a. Turn ignition switch OFF and wait at least 10 seconds.
b. Start engine and drive the vehicle under the similar conditions to (1st trip) Freeze Frame Data for a certain time. Refer to table below.
   Hold the accelerator pedal as steady as possible.

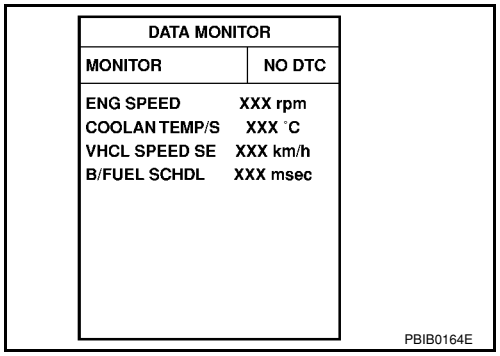

The similar conditions to (1st trip) Freeze Frame Data means the vehicle operation that the following condition should be satisfied at the same time:

Engine speed	Engine speed in the freeze frame data ± 400 rpm
Vehicle speed	Vehicle speed in the freeze frame data ± 10 km/h (6 MPH)
Engine coolant temperature (T) condition	When the freeze frame data shows lower than 70°C (158°F), T should be lower than 70°C (158°F)
	When the freeze frame data shows higher than or equal to 70°C (158°F), T should be higher than or equal to 70°C (158°F)

The time to driving varies according to the engine speed in the freeze frame data.
Refer to the following table.

Engine speed	Time
Around 1,000 rpm	Approximately 10 minutes
Around 2,000 rpm	Approximately 5 minutes
More than 3,000 rpm	Approximately 3.5 minutes

WITH GST
Follow the procedure “WITH CONSULT-II” above.

Diagnosis Procedure

INFOID:0000000001702792

1. CHECK FOR INTAKE AIR LEAK AND PCV HOSE

1. Start engine and run it at idle speed.
2. Listen for the sound of the intake air leak.
3. Check PCV hose connection.

OK or NG

OK >> GO TO 2.
NG >> Repair or replace.

2. CHECK FOR EXHAUST SYSTEM CLOGGING

Stop engine and visually check exhaust tube, three way catalyst and muffler for dents.

OK or NG

OK >> GO TO 3.
NG >> Repair or replace.

3. PERFORM POWER BALANCE TEST

With CONSULT-II

1. Perform “POWER BALANCE” in “ACTIVE TEST” mode.
2. Is there any cylinder which does not produce a momentary engine speed drop?

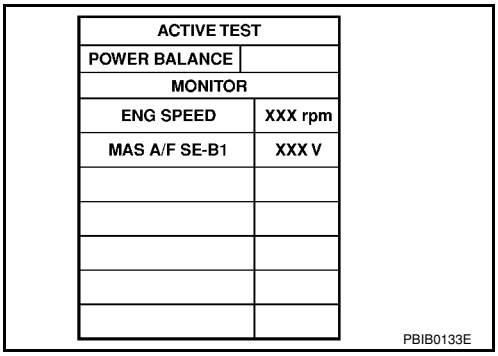

ACTIVE TEST	
POWER BALANCE	
MONITOR	
ENG SPEED	XXX rpm
MAS A/F SE-B1	XXX V

PBIB0133E

Without CONSULT-II

When disconnecting each fuel injector (1) harness connector one at a time, is there any cylinder which does not produce a momentary engine speed drop?

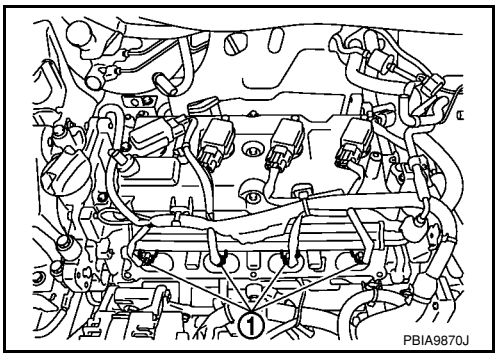

PBIA9870J

Yes or No

Yes >> GO TO 4.
No >> GO TO 9.

4. CHECK FUEL INJECTOR

Does each fuel injector make an operating sound at idle?

Yes or No

Yes >> GO TO 5.
No >> Check fuel injector(s) and circuit(s). Refer to EC-521.

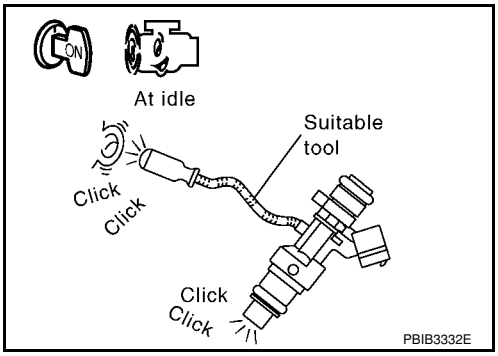

PBIB3332E

5. CHECK FUNCTION OF IGNITION COIL-I

CAUTION:

Do the following procedure in the place where ventilation is good without the combustible.

1. Turn ignition switch OFF.
2. Remove fuel pump fuse (1) in IPDM E/R (2) to release fuel pressure.
   NOTE:
   Do not use CONSULT-II to release fuel pressure, or fuel pressure applies again during the following procedure.
- ⇦: Vehicle front
3. Start engine.
4. After engine stalls, crank it two or three times to release all fuel pressure.
5. Turn ignition switch OFF.
6. Remove all ignition coil harness connectors to avoid the electrical discharge from the ignition coils.
7. Remove ignition coil and spark plug of the cylinder to be checked.

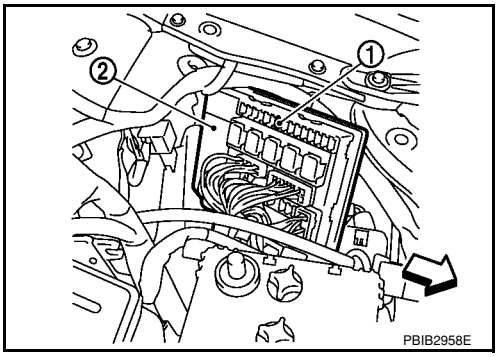

PBIB2958E

8. Crank engine for 5 seconds or more to remove combustion gas in the cylinder.
9. Connect spark plug and harness connector to ignition coil.
10. Fix ignition coil using a rope etc. with gap of 13 - 17 mm between the edge of the spark plug and grounded metal portion as shown in the figure.
11. Crank engine for about 3 seconds, and check whether spark is generated between the spark plug and the grounded metal portion.

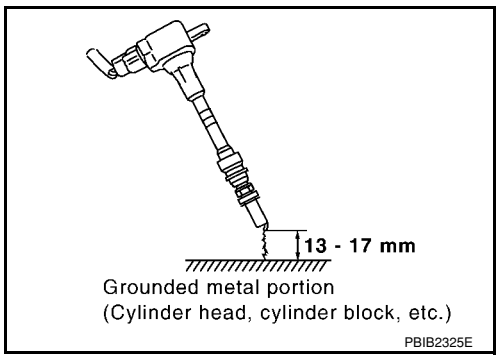

Spark should be generated.

CAUTION:
- **Do not approach to the spark plug and the ignition coil within 50cm. Be careful not to get an electrical shock while checking, because the electrical discharge voltage becomes 20kV or more.**
- **It might cause to damage the ignition coil if the gap of more than 17 mm is taken.**

NOTE:
When the gap is less than 13 mm, the spark might be generated even if the coil is malfunctioning.

OK or NG

OK >> GO TO 9.
NG >> GO TO 6.

6. CHECK FUNCTION OF IGNITION COIL-II

1. Turn ignition switch OFF.
2. Disconnect spark plug and connect a known-good spark plug.
3. Crank engine for about 3 seconds, and recheck whether spark is generated between the spark plug and the grounded metal portion.

Spark should be generated.

OK or NG

OK >> GO TO 7.
NG >> Check ignition coil, power transistor and their circuits. Refer to EC-531.

7. CHECK SPARK PLUG

Check the initial spark plug for fouling, etc.

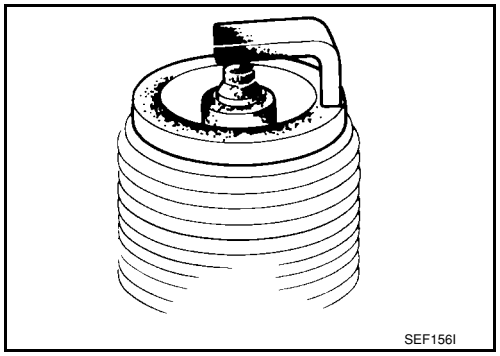

OK or NG

OK >> Replace spark plug(s) with standard type one(s). For spark plug type, refer to MA-17, "Changing Spark Plugs".
NG >> 1. Repair or clean spark plug.
2. GO TO 8.

8. CHECK FUNCTION OF IGNITION COIL-III

1. Reconnect the initial spark plugs.
2. Crank engine for about three seconds, and recheck whether spark is generated between the spark plug and the grounded portion.

Spark should be generated.

OK or NG

OK >> **INSPECTION END**
NG >> Replace spark plug(s) with standard type one(s). For spark plug type, refer to MA-17, "Changing Spark Plugs".

9. CHECK COMPRESSION PRESSURE

Check compression pressure. Refer to EM-62, "On-Vehicle Service".

OK or NG

OK >> GO TO 10.
NG >> Check pistons, piston rings, valves, valve seats and cylinder head gaskets.

10. CHECK FUEL PRESSURE

1. Install all removed parts.
2. Release fuel pressure to zero. Refer to EC-78, "Fuel Pressure Check".
3. Install fuel pressure gauge and check fuel pressure. Refer to EC-78, "Fuel Pressure Check".

At idling: Approximately 350 kPa (3.57 kg/cm^2, 51 psi)

OK or NG

OK >> GO TO 12.
NG >> GO TO 11.

11. DETECT MALFUNCTIONING PART

Check the following.
- Fuel pump and circuit (Refer to EC-526.)
- Fuel pressure regulator (Refer to EC-78, "Fuel Pressure Check".)
- Fuel lines (Refer to EM-33.)
- Fuel filter for clogging

>> Repair or replace.

12. CHECK IGNITION TIMING

Check the following items. Refer to EC-69, "Basic Inspection".

Items	Specifications
Target idle speed	A/T: 700 ± 50 rpm (in P or N position)
	CVT: 700 ± 50 rpm (in P or N position)
	M/T: 700 ± 50 rpm (in Neutral position)
Ignition timing	A/T: 13 ± 5° BTDC (in P or N position)
	CVT: 13 ± 5° BTDC (in Neutral position)
	M/T: 13 ± 5° BTDC (in Neutral position)

OK or NG

OK >> GO TO 13.
NG >> Follow the EC-69, "Basic Inspection".

13. CHECK AIR FUEL RATIO (A/F) SENSOR 1 CIRCUIT FOR OPEN AND SHORT

1. Turn ignition switch OFF.
2. Disconnect air fuel ratio (A/F) sensor 1 harness connector (1).
- Air fuel ratio (A/F) sensor 1 (2)
3. Disconnect ECM harness connector.
4. Check harness continuity between the following terminals. Refer to Wiring Diagram.

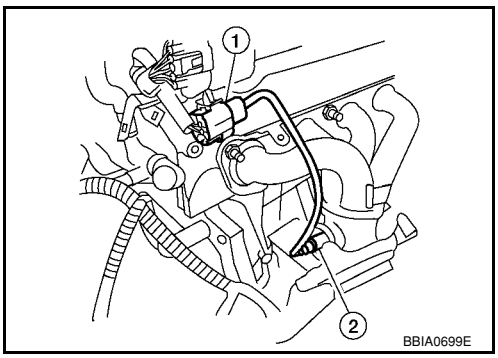

A/F sensor 1 terminal	ECM terminal
1	49
2	53

Continuity should exist.

5. Check harness continuity between ECM terminals 49, 53 or A/F sensor 1 terminals 1, 2 and ground. Refer to Wiring Diagram.

Continuity should not exist.

6. Also check harness for short to power.

OK or NG

OK >> GO TO 14.
NG >> Repair open circuit or short to ground or short to power in harness or connectors.

14. CHECK AIR FUEL RATIO (A/F) SENSOR 1 HEATER

Refer to EC-154, "Component Inspection".

OK or NG

OK >> GO TO 16.
NG >> GO TO 15.

15. REPLACE AIR FUEL RATIO (A/F) SENSOR 1

Replace air fuel ratio (A/F) sensor 1.

CAUTION:

- **Discard any A/F sensor which has been dropped from a height of more than 0.5 m (19.7 in) onto a hard surface such as a concrete floor; use a new one.**
- **Before installing new A/F sensor, clean exhaust system threads using Oxygen Sensor Thread Cleaner tool J-43897-18 or J-43897-12 and approved anti-seize lubricant.**

>> **INSPECTION END**

16. CHECK MASS AIR FLOW SENSOR

With CONSULT-II

1. Start engine and warm it up to normal operating temperature.
2. Check mass air flow sensor signal in “DATA MONITOR” mode with CONSULT-II.

at idling	**: 1.0 - 4.0 g·m/sec**
at 2,500 rpm	**: 2.0 - 10.0 g·m/sec**

With GST

1. Start engine and warm it up to normal operating temperature.
2. Check mass air flow sensor signal in Service $01 with GST.

at idling	**: 1.0 - 4.0 g·m/sec**
at 2,500 rpm	**: 2.0 - 10.0 g·m/sec**

OK or NG

OK >> GO TO 17.
NG >> Check connectors for rusted terminals or loose connections in the mass air flow sensor circuit or ground. Refer to EC-167.

17. CHECK SYMPTOM MATRIX CHART

Check items on the rough idle symptom in EC-88, "Symptom Matrix Chart".

OK or NG

OK >> GO TO 18.
NG >> Repair or replace.

18. ERASE THE 1ST TRIP DTC

Some tests may cause a 1st trip DTC to be set.
Erase the 1st trip DTC from the ECM memory after performing the tests. Refer to EC-47, "Emission-related Diagnostic Information".

>> GO TO 19.

19. CHECK INTERMITTENT INCIDENT

Refer to EC-136.

>> **INSPECTION END**

DTC P0327, P0328 KS

Component Description

INFOID:0000000001702793

The knock sensor (1) is attached to the cylinder block. It senses engine knocking using a piezoelectric element. A knocking vibration from the cylinder block is sensed as vibrational pressure. This pressure is converted into a voltage signal and sent to the ECM.

- ⇦: Vehicle front

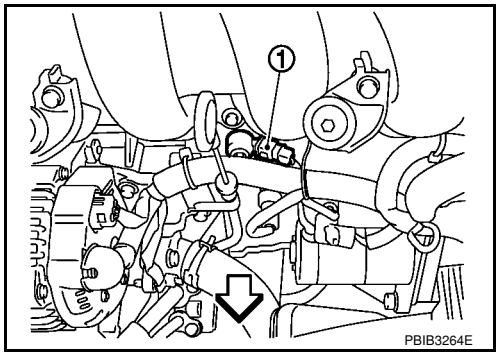

On Board Diagnosis Logic

INFOID:0000000001702794

The MIL will not light up for these self-diagnoses.

DTC No.	Trouble Diagnosis Name	DTC Detected Condition	Possible Cause
P0327 0327	Knock sensor circuit low input	An excessively low voltage from the sensor is sent to ECM.	• Harness or connectors (Knock sensor circuit is open or shorted.) • Knock sensor
P0328 0328	Knock sensor circuit high input	An excessively high voltage from the sensor is sent to ECM.	

DTC Confirmation Procedure

INFOID:0000000001702795

NOTE:
If DTC Confirmation Procedure has been previously conducted, always turn ignition switch OFF and wait at least 10 seconds before conducting the next test.
TESTING CONDITION:
Before performing the following procedure, confirm that battery voltage is more than 10V at idle.

WITH CONSULT-II

1. Turn ignition switch ON and select “DATA MONITOR” mode with CONSULT-II.
2. Start engine and run it for at least 5 seconds at idle speed.
3. If 1st trip DTC is detected, go to EC-293, "Diagnosis Procedure".

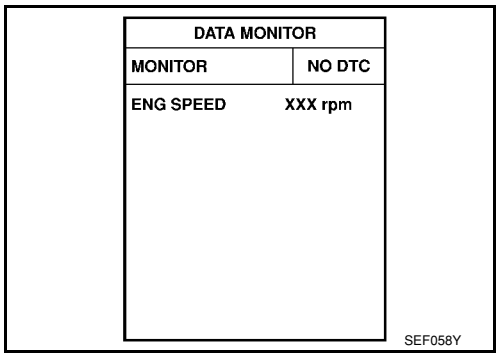

WITH GST

Follow the procedure “WITH CONSULT-II” above.

Wiring Diagram

INFOID:0000000001702796

EC-KS-01

: DETECTABLE LINE FOR DTC
: NON-DETECTABLE LINE FOR DTC

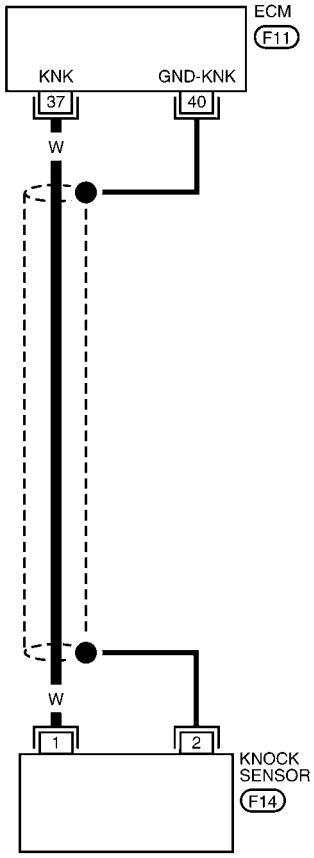

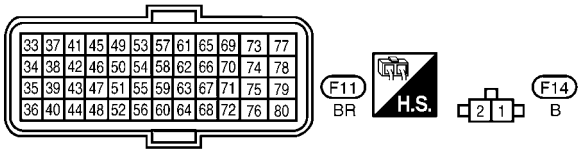

BBWA2637E

Specification data are reference values and are measured between each terminal and ground.

CAUTION:

Do not use ECM ground terminals when measuring input/output voltage. Doing so may result in damage to the ECM's transistor. Use a ground other than ECM terminals, such as the ground.

TERMINAL NO.	WIRE COLOR	ITEM	CONDITION	DATA (DC Voltage)
37	W	Knock sensor	**[Engine is running]** • Idle speed	Approximately 2.5V
40	—	Sensor ground (Knock sensor)	**[Engine is running]** • **Warm-up condition** • Idle speed	Approximately 0V

Diagnosis Procedure

INFOID:0000000001702797

1. CHECK KNOCK SENSOR INPUT SIGNAL CIRCUIT-I

1. Turn ignition switch OFF.
2. Disconnect ECM harness connector.
3. Check resistance between ECM terminal 37 and ground. Refer to Wiring Diagram.
   NOTE:
   It is necessary to use an ohmmeter which can measure more than 10 MΩ.

   Resistance: Approximately 532 - 588kΩ [at 20°C (68°F)]

4. Also check harness for short to ground and short to power.

OK or NG

OK >> GO TO 4.
NG >> GO TO 2.

2. CHECK KNOCK SENSOR INPUT SIGNAL CIRCUIT-II

1. Disconnect knock sensor (1) harness connector.
- ⇦: Vehicle front
2. Check harness continuity between ECM terminal 37 and knock sensor terminal 1. Refer to Wiring Diagram.

   Continuity should exist.

3. Also check harness for short to ground and short to power.

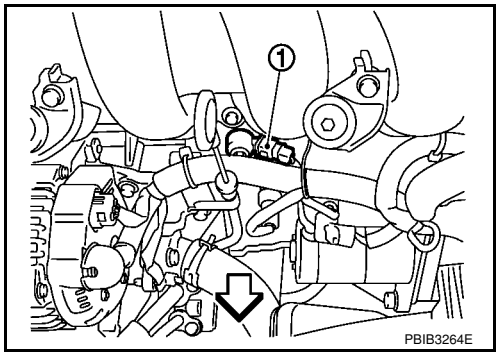

OK or NG

OK >> GO TO 3.
NG >> Repair open circuit or short to ground or short to power in harness or connectors.

3. CHECK KNOCK SENSOR

Refer to EC-294, "Component Inspection".

OK or NG

OK >> GO TO 6.
NG >> Replace knock sensor.

4. CHECK GROUND CONNECTIONS

Loosen and retighten ground screws on the body.
Refer to EC-142, "Ground Inspection".

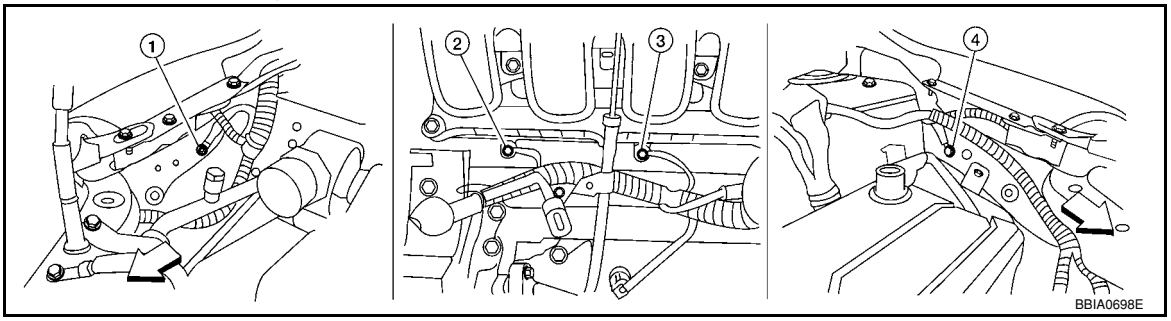

⇦: Vehicle front

1. Body ground E24
2. Engine ground F9
3. Engine ground F16
4. Body ground E15

OK or NG

OK >> GO TO 5.
NG >> Repair or replace ground connections.

5. CHECK KNOCK SENSOR SHIELD CIRCUIT FOR OPEN AND SHORT

1. Reconnect knock sensor harness connector.
2. Check harness continuity between ECM terminal 40 and knock sensor terminal 2.
   Refer to Wiring Diagram.

   Continuity should exist

3. Also check harness for short to ground and short to power.

OK or NG

OK >> GO TO 6.
NG >> Repair open circuit or short to ground or short to power in harness or connectors.

6. CHECK INTERMITTENT INCIDENT

Refer to EC-136.

>> **INSPECTION END**

Component Inspection

INFOID:0000000001702798

KNOCK SENSOR

1. Check resistance between knock sensor terminal 1 and ground.
   NOTE:
   It is necessary to use an ohmmeter which can measure more than 10 MΩ.

   Resistance: Approximately 532 - 588kΩ [at 20°C (68°F)]

   CAUTION:
   Do not use any knock sensors that have been dropped or physically damaged. Use only new ones.

2. If NG, replace knock sensor.

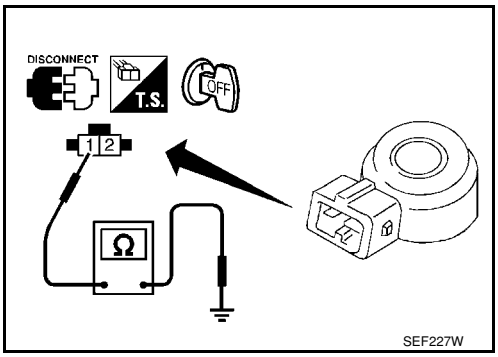

Removal and Installation

INFOID:0000000001702799

KNOCK SENSOR

Refer to EM-76.

DTC P0335 CKP SENSOR (POS)

Component Description

INFOID:0000000001702800

The crankshaft position sensor (POS) is located on the cylinder block rear housing facing the gear teeth (cogs) of the signal plate at the end of the crankshaft. It detects the fluctuation of the engine revolution. The sensor consists of a permanent magnet and Hall IC.
When the engine is running, the high and low parts of the teeth cause the gap with the sensor to change. The changing gap causes the magnetic field near the sensor to change. Due to the changing magnetic field, the voltage from the sensor changes. The ECM receives the voltage signal and detects the fluctuation of the engine revolution.
ECM receives the signals as shown in the figure.

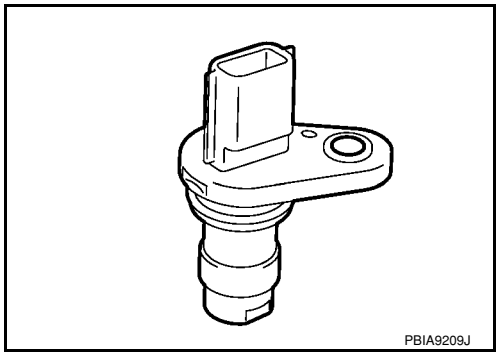

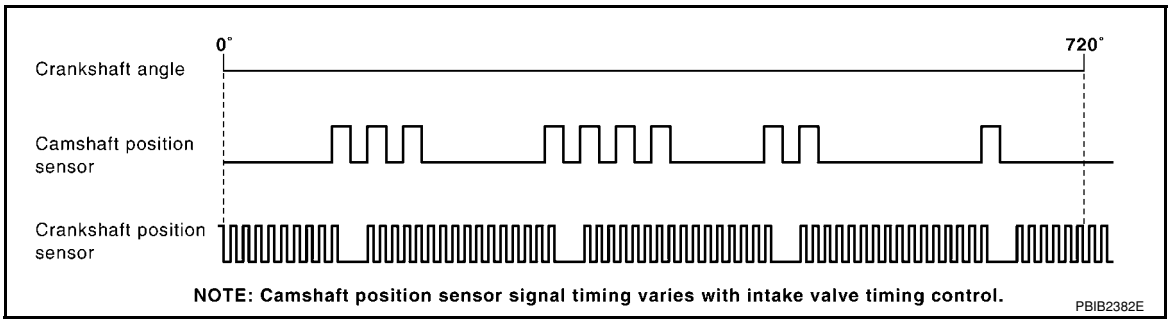

CONSULT-II Reference Value in Data Monitor Mode

INFOID:0000000001702801

Specification data are reference values.

MONITOR ITEM	CONDITION	SPECIFICATION
ENG SPEED	• Run engine and compare CONSULT-II value with the tachometer indication.	Almost the same speed as the tachometer indication.

On Board Diagnosis Logic

INFOID:0000000001702802

DTC No.	Trouble diagnosis name	DTC detecting condition	Possible cause
P0335 0335	Crankshaft position sensor (POS) circuit	• The crankshaft position sensor (POS) signal is not detected by the ECM during the first few seconds of engine cranking. • The proper pulse signal from the crankshaft position sensor (POS) is not sent to ECM while the engine is running. • The crankshaft position sensor (POS) signal is not in the normal pattern during engine running.	• Harness or connectors [Crankshaft position sensor (POS) circuit is open or shorted.] (Accelerator pedal position sensor circuit is shorted.) (Refrigerant pressure sensor circuit is shorted.) (EVAP control system pressure sensor circuit is shorted.) • Crankshaft position sensor (POS) • Accelerator pedal position sensor • Refrigerant pressure sensor • EVAP control system pressure sensor • Signal plate

DTC Confirmation Procedure

INFOID:0000000001702803

NOTE:
If DTC Confirmation Procedure has been previously conducted, always turn ignition switch OFF and wait at least 10 seconds before conducting the next test.
TESTING CONDITION:

Before performing the following procedure, confirm that battery voltage is more than 10.5V with ignition switch ON.

WITH CONSULT-II

1. Turn ignition switch ON and select “DATA MONITOR” mode with CONSULT-II.
2. Crank engine for at least 2 seconds and run it for at least 5 seconds at idle speed.
3. If 1st trip DTC is detected, go to EC-298, "Diagnosis Procedure".

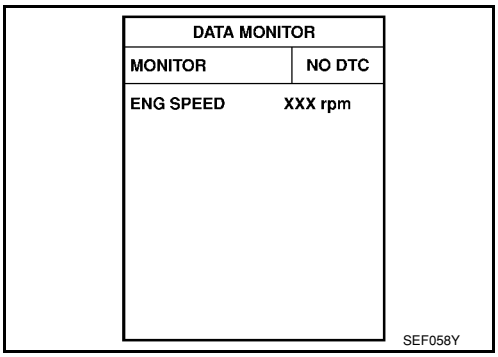

WITH GST

Follow the procedure “WITH CONSULT-II” above.

Wiring Diagram

INFOID:0000000001702804

EC-POS-01

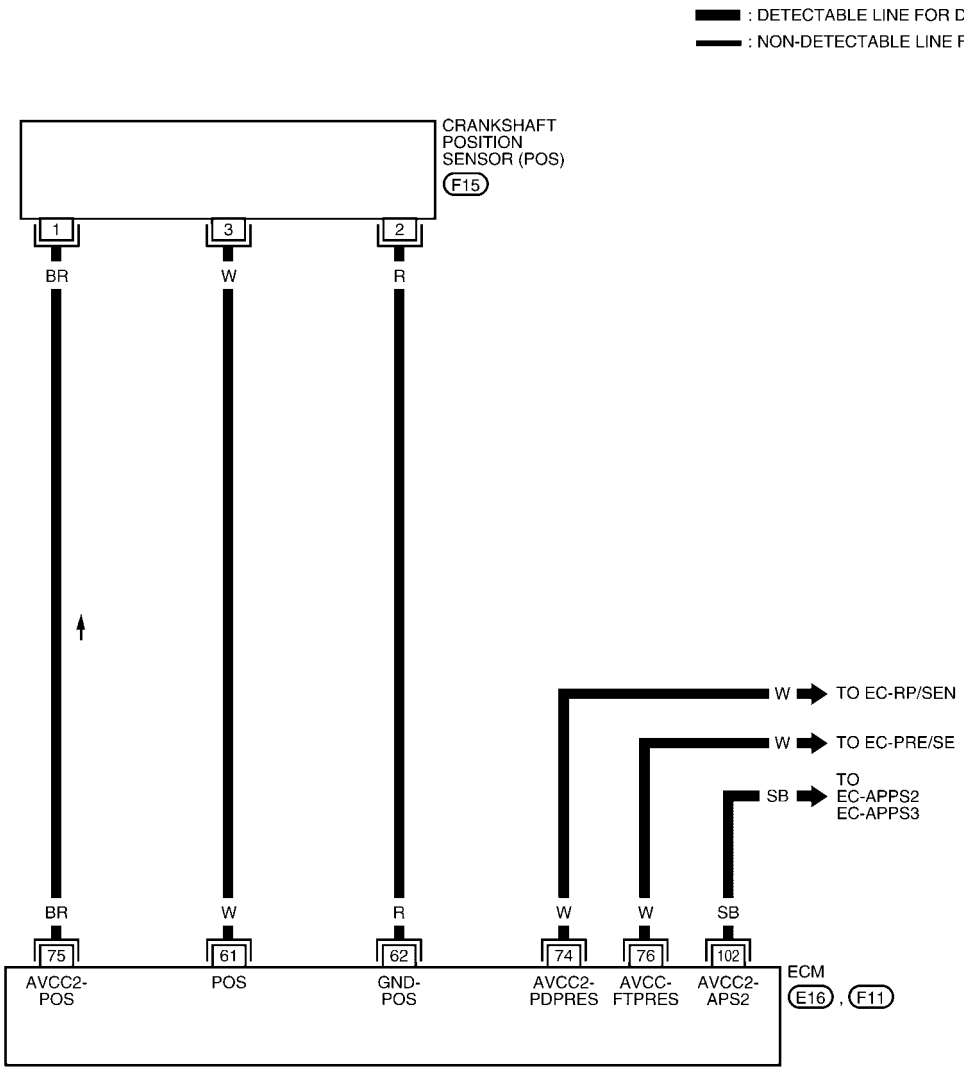

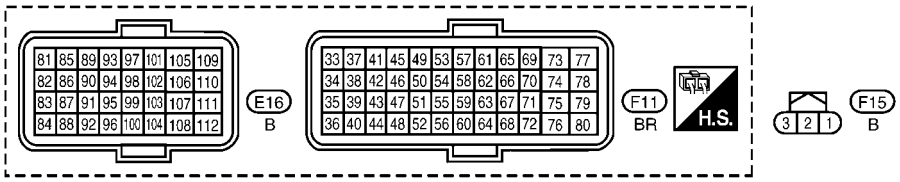

BBWA3071E

Specification data are reference values and are measured between each terminal and ground.
Pulse signal is measured by CONSULT-II.

CAUTION:

Do not use ECM ground terminals when measuring input/output voltage. Doing so may result in damage to the ECM's transistor. Use a ground other than ECM terminals, such as the ground.

TERMINAL NO.	WIRE COLOR	ITEM	CONDITION	DATA (DC Voltage)
61	W	Crankshaft position sensor (POS)	**[Engine is running]** • **Warm-up condition** • Idle speed **NOTE:** The pulse cycle changes depending on rpm at idle	0 - 1.0V★ 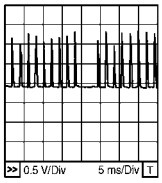 MBIB1453E
			[Engine is running] • Engine speed: 2,000 rpm	0 - 1.0V★ 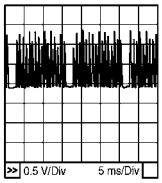 MBIB1454E
62	R	Sensor ground [Crankshaft position sensor (POS)]	**[Engine is running]** • **Warm-up condition** • Idle speed	Approximately 0V
74	W	Sensor power supply (Refrigerant pressure sensor)	**[Ignition switch: ON]**	Approximately 5V
75	BR	Sensor power supply [Crankshaft position sensor (POS)]	**[Ignition switch: ON]**	Approximately 5V
76	W	EVAP control system pressure sensor power supply	**[Ignition switch: ON]**	Approximately 5V
102	SB	Sensor power supply (APP sensor 2)	**[Ignition switch: ON]**	Approximately 5V

★: Average voltage for pulse signal (Actual pulse signal can be confirmed by oscilloscope.)

Diagnosis Procedure

INFOID:0000000001702805

1. CHECK GROUND CONNECTIONS

1. Turn ignition switch OFF.
2. Loosen and retighten ground screws on the body.
   Refer to EC-142, "Ground Inspection".

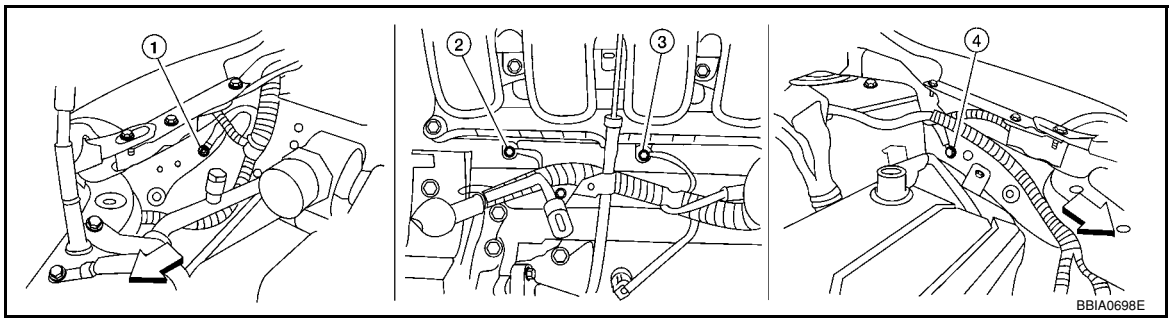

⇦: Vehicle front

1. Body ground E24
2. Engine ground F9
3. Engine ground F16
4. Body ground E15

OK or NG

OK >> GO TO 2.
NG >> Repair or replace ground connections.

2. CHECK CRANKSHAFT POSITION (CKP) SENSOR (POS) POWER SUPPLY CIRCUIT-I

1. Disconnect crankshaft position (CKP) sensor (POS) (1) harness connector.
2. Turn ignition switch ON.

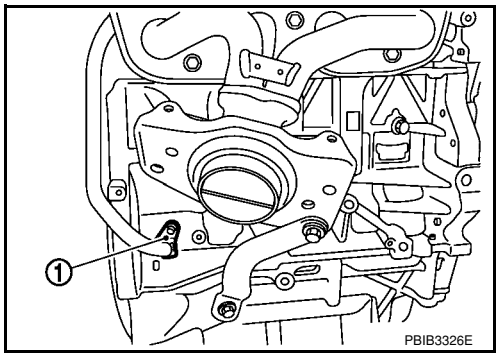

3. Check voltage between CKP sensor (POS) terminal 1 and ground with CONSULT-II or tester.

Voltage: Approximately 5V

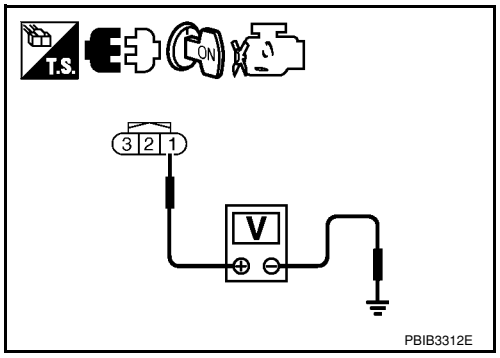

OK or NG

OK >> GO TO 8.
NG >> GO TO 3.

3. CHECK CKP SENSOR (POS) POWER SUPPLY CIRCUIT-II

1. Turn ignition switch OFF.
2. Disconnect ECM harness connector.
3. Check harness continuity between CKP sensor (POS) terminal 1 and ECM terminal 75. Refer to Wiring Diagram.

Continuity should exist.

OK or NG

OK >> GO TO 4.
NG >> Repair open circuit.

4. CHECK COMPONENTS POWER SUPPLY

Check harness for short to power and short to ground, between the following terminals.

ECM terminal	Sensor terminal	Reference Wiring Diagram
74	Refrigerant pressure sensor terminal 3	EC-542, "Wiring Diagram"
75	Crankshaft position sensor (POS) terminal 1	EC-297, "Wiring Diagram"
76	EVAP control system pressure sensor terminal 3	EC-357, "Wiring Diagram"
102	APP sensor terminal 5	EC-482, "Wiring Diagram"

OK or NG

OK >> GO TO 5.
NG >> Repair short to ground or short to power in harness or connectors.

5. CHECK COMPONENTS

Check the following.
- Refrigerant pressure sensor. (Refer to MTC-22.)
- EVAP control system pressure sensor. (Refer to EC-361, "Component Inspection".)

OK or NG

OK >> GO TO 6.
NG >> Replace malfunctioning components.

6. CHECK APP SENSOR

Refer to EC-485, "Component Inspection".

OK or NG

OK >> GO TO 8.
NG >> GO TO 7.

7. REPLACE ACCELERATOR PEDAL ASSEMBLY

1. Replace accelerator pedal assembly.
2. Perform EC-76, "Accelerator Pedal Released Position Learning".
3. Perform EC-76, "Throttle Valve Closed Position Learning".
4. Perform EC-76, "Idle Air Volume Learning".

>> **INSPECTION END**

8. CHECK CKP SENSOR (POS) GROUND CIRCUIT FOR OPEN AND SHORT

1. Turn ignition switch OFF.
2. Disconnect ECM harness connector.
3. Check harness continuity between CKP sensor (POS) terminal 2 and ECM terminal 62.
   Refer to Wiring Diagram.

Continuity should exist.

4. Also check harness for short to ground and short to power.

OK or NG

OK >> GO TO 9.
NG >> Repair open circuit or short to ground or short to power in harness or connectors.

9. CHECK CKP SENSOR (POS) INPUT SIGNAL CIRCUIT FOR OPEN AND SHORT

1. Check harness continuity between CKP sensor (POS) terminal 3 and ECM terminal 61.
   Refer to Wiring Diagram.

Continuity should exist.

2. Also check harness for short to ground and short to power.

OK or NG

OK >> GO TO 10.
NG >> Repair open circuit or short to ground or short to power in harness or connectors.

10. CHECK CRANKSHAFT POSITION SENSOR (POS)

Refer to EC-301, "Component Inspection".

OK or NG

OK >> GO TO 11.
NG >> Replace crankshaft position sensor (POS).

11. CHECK GEAR TOOTH

Visually check for chipping signal plate gear tooth.

OK or NG

OK >> GO TO 12.
NG >> Replace the signal plate.

12. CHECK INTERMITTENT INCIDENT

Refer to EC-136.

>> **INSPECTION END**

Component Inspection

INFOID:0000000001702806

CRANKSHAFT POSITION SENSOR (POS)

1. Loosen the fixing bolt of the sensor.
2. Disconnect crankshaft position sensor (POS) harness connector.
3. Remove the sensor.
4. Visually check the sensor for chipping.

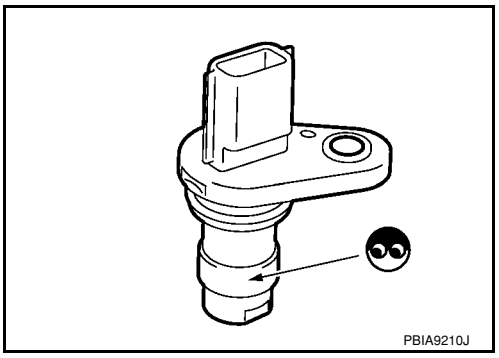

5. Check resistance as shown in the figure.

Terminal No. (Polarity)	Resistance Ω [at 25°C (77°F)]
1 (+) - 2 (-)	Except 0 or ∞
1 (+) - 3 (-)	
2 (+) - 3 (-)	

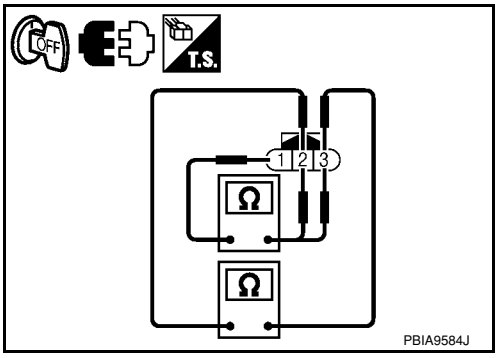

6. If NG, replace crankshaft position sensor (POS).

Removal and Installation

INFOID:0000000001702807

CRANKSHAFT POSITION SENSOR (POS)

Refer to EM-76.

DTC P0340 CMP SENSOR (PHASE)

Component Description

INFOID:0000000001702808

The camshaft position sensor (PHASE) senses the protrusion of camshaft (INT) to identify a particular cylinder. The camshaft position sensor (PHASE) senses the piston position. When the crankshaft position sensor (POS) system becomes inoperative, the camshaft position sensor (PHASE) provides various controls of engine parts instead, utilizing timing of cylinder identification signals. The sensor consists of a permanent magnet and Hall IC. When engine is running, the high and low parts of the teeth cause the gap with the sensor to change. The changing gap causes the magnetic field near the sensor to change. Due to the changing magnetic field, the voltage from the sensor changes.
ECM receives the signals as shown in the figure.

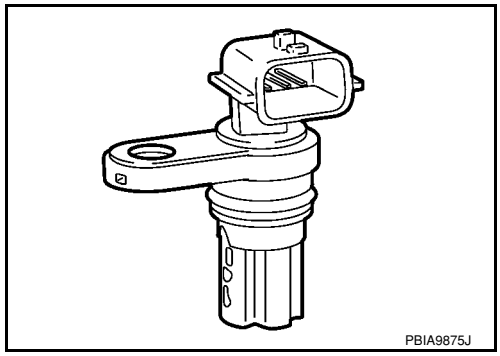

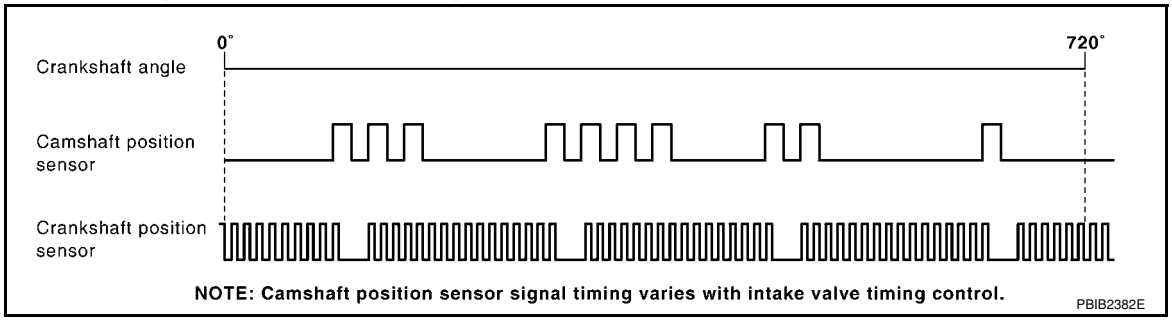

CONSULT-II Reference Value in Data Monitor Mode

INFOID:0000000001702809

Specification data are reference values.

MONITOR ITEM	CONDITION	SPECIFICATION
ENG SPEED	• Run engine and compare CONSULT-II value with the tachometer indication.	Almost the same speed as the tachometer indication.

On Board Diagnosis Logic

INFOID:0000000001702810

NOTE:
If DTC P0340 is displayed with DTC P0643, first perform the trouble diagnosis for DTC P0643. Refer to EC-400.

DTC No.	Trouble diagnosis name	DTC detecting condition	Possible cause
P0340 0340	Camshaft position sensor (PHASE) circuit	• The cylinder No. signal is not sent to ECM for the first few seconds during engine cranking. • The cylinder No. signal is not set to ECM during engine running. • The cylinder No. signal is not in the normal pattern during engine running.	• Harness or connectors [Camshaft position sensor (PHASE) circuit is open or shorted.] • Camshaft position sensor (PHASE) • Camshaft (INT) • Starter motor (Refer to SC-8.) • Starting system circuit (Refer to SC-8) • Dead (Weak) battery

DTC Confirmation Procedure

INFOID:0000000001702811

NOTE:
If DTC Confirmation Procedure has been previously conducted, always turn ignition switch OFF and wait at least 10 seconds before conducting the next test.
TESTING CONDITION:
Before performing the following procedure, confirm that battery voltage is more than 10.5V with ignition switch ON.

WITH CONSULT-II

1. Turn ignition switch ON.
2. Select “DATA MONITOR” mode with CONSULT-II.
3. Crank engine for at least 2 seconds and run it for at least 5 seconds at idle speed.
4. If 1st trip DTC is detected, go to EC-305, "Diagnosis Procedure".
   If 1st trip DTC is not detected, go to next step.
5. Maintain engine speed at more than 800 rpm for at least 5 seconds.
6. If 1st trip DTC is detected, go to EC-305, "Diagnosis Procedure".

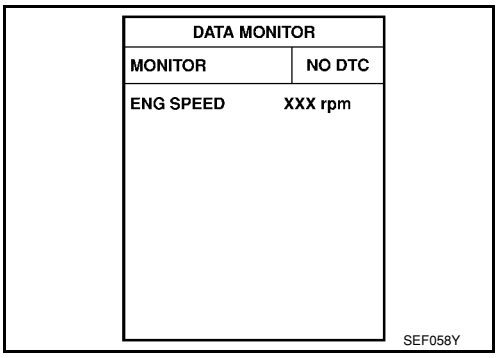

WITH GST

Follow the procedure “WITH CONSULT-II” above.

Wiring Diagram

INFOID:0000000001702812

EC-PHASE-01

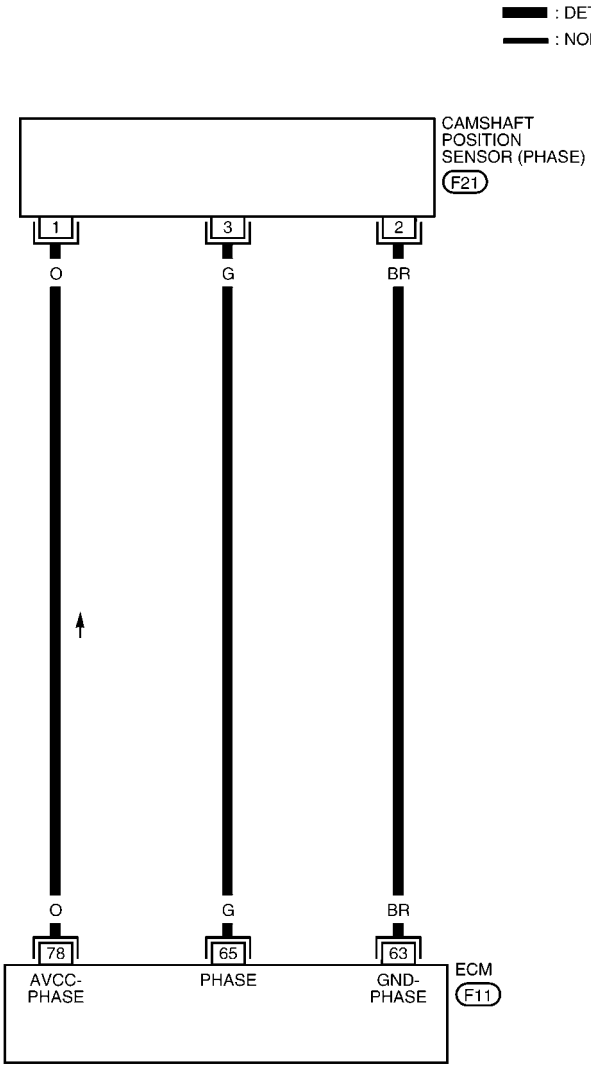

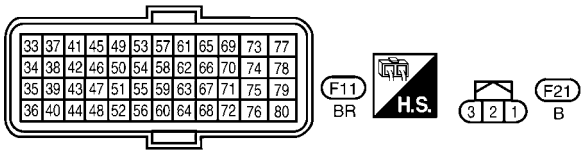

BBWA2639E

Specification data are reference values and are measured between each terminal and ground.
Pulse signal is measured by CONSULT-II.

CAUTION:

Do not use ECM ground terminals when measuring input/output voltage. Doing so may result in damage to the ECM's transistor. Use a ground other than ECM terminals, such as the ground.

TERMINAL NO.	WIRE COLOR	ITEM	CONDITION	DATA (DC Voltage)
63	BR	Sensor ground [Camshaft position sensor (PHASE)]	**[Engine is running]** • **Warm-up condition** • Idle speed	Approximately 0V
65	G	Camshaft position sensor (PHASE)	**[Engine is running]** • **Warm-up condition** • Idle speed **NOTE:** The pulse cycle changes depending on rpm at idle	0 - 1.0V★ 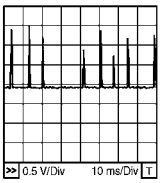 MBIB1455E
			[Engine is running] • Engine speed: 2,000 rpm	0 - 1.0V★ 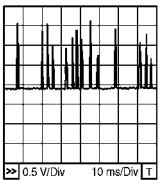 MBIB1456E
78	O	Sensor power supply [Camshaft position sensor (PHASE)]	**[Ignition switch: ON]**	Approximately 5V

★: Average voltage for pulse signal (Actual pulse signal can be confirmed by oscilloscope.)

Diagnosis Procedure

INFOID:0000000001702813

1. CHECK STARTING SYSTEM

Turn ignition switch to START position.

Does the engine turn over?

Does the starter motor operate?

Yes or No

Yes >> GO TO 2.
No >> Check starting system. (Refer to SC-8.)

2. CHECK GROUND CONNECTIONS

1. Turn ignition switch OFF.
2. Loosen and retighten ground screws on the body.
   Refer to EC-142, "Ground Inspection".

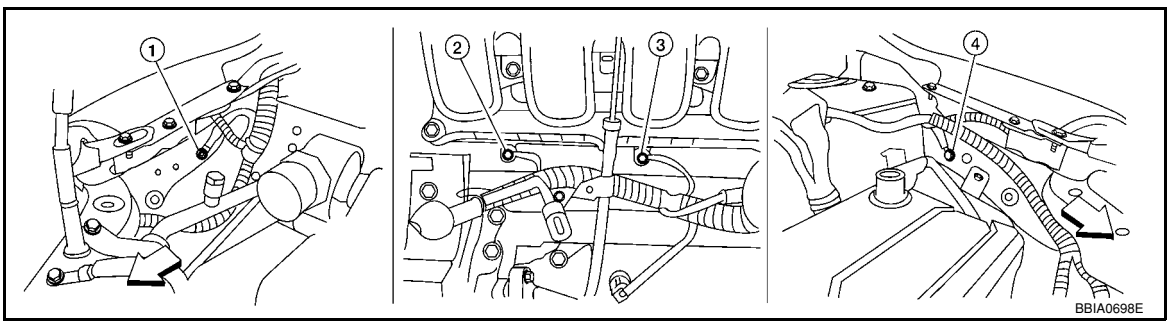

⇦: Vehicle front

1. Body ground E24
2. Engine ground F9
3. Engine ground F16
4. Body ground E15

OK or NG

OK >> GO TO 3.
NG >> Repair or replace ground connections.

3. CHECK CAMSHAFT POSITION (CMP) SENSOR (PHASE) POWER SUPPLY CIRCUIT

1. Disconnect camshaft position (CMP) sensor (PHASE) (1) harness connector.
- ⇦: Vehicle front
2. Turn ignition switch ON.

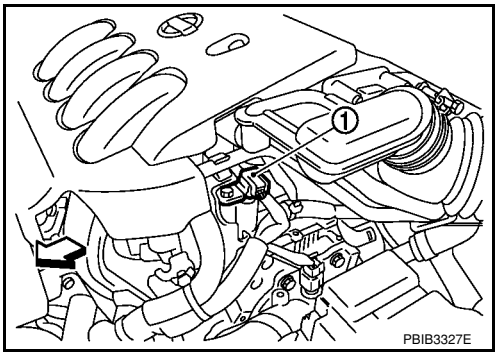

3. Check voltage between CMP sensor (PHASE) terminal 1 and ground with CONSULT-II or tester.

Voltage: Approximately 5V

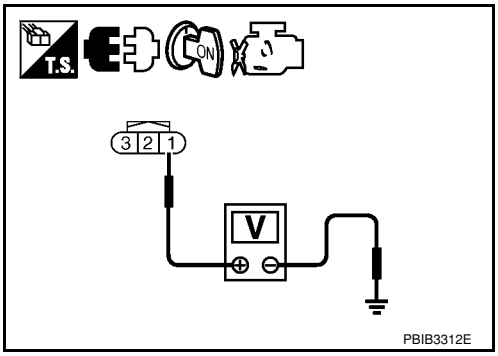

OK or NG

OK >> GO TO 4.
NG >> Repair open circuit or short to ground or short to power in harness or connectors.

4. CHECK CMP SENSOR (PHASE) GROUND CIRCUIT FOR OPEN AND SHORT

1. Turn ignition switch OFF.
2. Disconnect ECM harness connector.
3. Check harness continuity between CMP sensor (PHASE) terminal 2 and ECM terminal 63. Refer to Wiring Diagram.

Continuity should exist.

4. Also check harness for short to ground and short to power.

OK or NG

OK >> GO TO 5.
NG >> Repair open circuit or short to ground or short to power in harness or connectors.

5. CHECK CMP SENSOR (PHASE) INPUT SIGNAL CIRCUIT FOR OPEN AND SHORT

1. Check harness continuity between CMP sensor (PHASE) terminal 3 and ECM terminal 65. Refer to Wiring Diagram.

Continuity should exist.

2. Also check harness for short to ground and short to power.

OK or NG

OK >> GO TO 6.
NG >> Repair open circuit or short to ground or short to power in harness or connectors.

6. CHECK CAMSHAFT POSITION SENSOR (PHASE)

Refer to EC-307, "Component Inspection".

OK or NG

OK >> GO TO 7.
NG >> Replace camshaft position sensor (PHASE).

7. CHECK CAMSHAFT (INTAKE)

Check the following.
- Accumulation of debris to the signal plate of camshaft (1) rear end
- Chipping signal plate of camshaft rear end

OK or NG

OK >> GO TO 8.
NG >> Remove debris and clean the signal plate of camshaft rear end or replace camshaft.

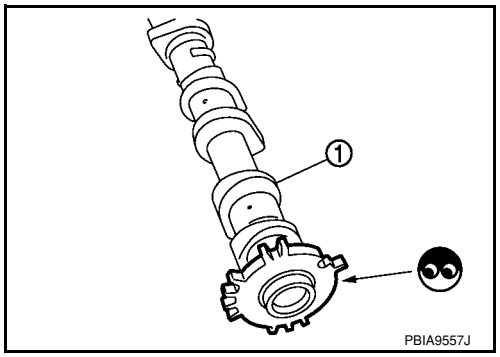

8. CHECK INTERMITTENT INCIDENT

Refer to EC-136.

>> **INSPECTION END**

Component Inspection

INFOID:0000000001702814

CAMSHAFT POSITION SENSOR (PHASE)

1. Loosen the fixing bolt of the sensor.
2. Disconnect camshaft position sensor (PHASE) harness connector.
3. Remove the sensor.
4. Visually check the sensor for chipping.

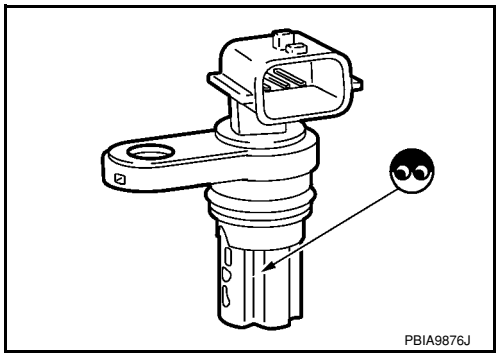

5. Check resistance as shown in the figure.

Terminal No. (Polarity)	Resistance Ω [at 25°C (77°F)]
1 (+) - 2 (-)	Except 0 or ∞
1 (+) - 3 (-)	
2 (+) - 3 (-)	

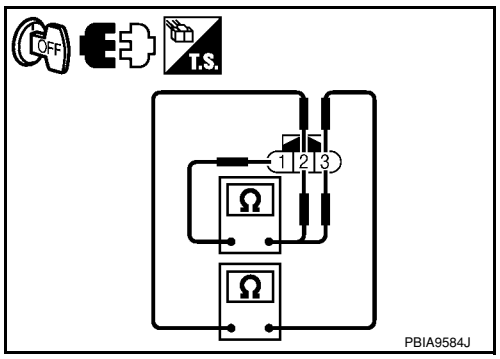

6. If NG, replace camshaft position sensor (PHASE).

Removal and Installation

INFOID:0000000001702815

CAMSHAFT POSITION SENSOR (PHASE)

Refer to EM-47.

DTC P0420 THREE WAY CATALYST FUNCTION

On Board Diagnosis Logic

INFOID:0000000001702816

The ECM monitors the switching frequency ratio of air fuel ratio (A/F) sensor 1 and heated oxygen sensor 2.
A three way catalyst (manifold) with high oxygen storage capacity will indicate a low switching frequency of heated oxygen sensor 2. As oxygen storage capacity decreases, the heated oxygen sensor 2 switching frequency will increase.
When the frequency ratio of air fuel ratio (A/F) sensor 1 and heated oxygen sensor 2 approaches a specified limit value, the three way catalyst (manifold) malfunction is diagnosed.

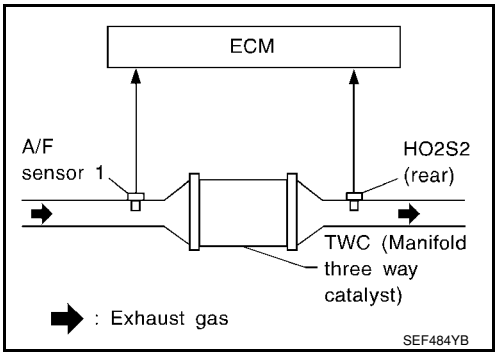

DTC No.	Trouble diagnosis name	DTC detecting condition	Possible cause
P0420 0420	Catalyst system efficiency below threshold	• Three way catalyst (manifold) does not operate properly. • Three way catalyst (manifold) does not have enough oxygen storage capacity.	• Three way catalyst (manifold) • Exhaust tube • Intake air leaks • Fuel injector • Fuel injector leaks • Spark plug • Improper ignition timing

DTC Confirmation Procedure

INFOID:0000000001702817

NOTE:
If DTC Confirmation Procedure has been previously conducted, always turn ignition switch OFF and wait at least 10 seconds before conducting the next test.

WITH CONSULT-II

TESTING CONDITION:
Do not hold engine speed for more than the specified minutes below.

1. Turn ignition switch ON and select “DATA MONITOR” mode with CONSULT-II.
2. Start engine and warm it up to the normal operating temperature.
3. Turn ignition switch OFF and wait at least 10 seconds.
4. Start engine and keep the engine speed between 3,500 and 4,000 rpm for at least 1 minute under no load.
5. Let engine idle for 1 minute.
6. Make sure that “COOLAN TEMP/S” indicates more than 70°C (158°F).
   If not, warm up engine and go to next step when “COOLAN TEMP/S” indication reaches to 70°C (158°F).
7. Open engine hood.

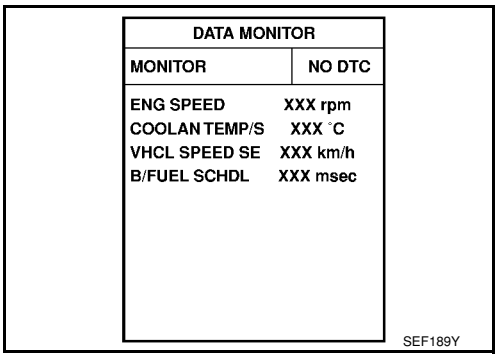

8. Select “DTC & SRT CONFIRMATION” then “SRT WORK SUPPORT” mode with CONSULT-II.
9. Rev engine up to 2,000 to 3,000 rpm and hold it for 3 consecutive minutes then release the accelerator pedal completely.
   If “INCMP” of “CATALYST” changed to “CMPLT”, go to step 12.
10. Wait 5 seconds at idle.

SRT WORK SUPPORT	
CATALYST	INCMP
EVAP SYSTEM	INCMP
HO2S HTR	CMPLT
HO2S	INCMP
EGR SYSTEM	INCMP
MONITOR	
ENG SPEED	XXX rpm
MAS A/F SE-B1	XXX V
B/FUEL SCHDL	XXX msec
A/F ALPHA-B1	XXX V
COOLAN TEMP/S	XX ˚C
A/F SEN1 (B1)	XXX V

SEF533Z

11. Rev engine up to 2,000 to 3,000 rpm and maintain it until “INCMP” of “CATALYST” changes to “CMPLT” (It will take approximately 5 minutes).
    If not “CMPLT”, stop engine and cool it down to less than 70°C (158°F) and then retest from step 1.

SRT WORK SUPPORT	
CATALYST	CMPLT
EVAP SYSTEM	INCMP
HO2S HTR	CMPLT
HO2S	INCMP
EGR SYSTEM	INCMP
MONITOR	
ENG SPEED	XXX rpm
MAS A/F SE-B1	XXX V
B/FUEL SCHDL	XXX msec
A/F ALPHA-B1	XXX V
COOLAN TEMP/S	XX ˚C
A/F SEN1 (B1)	XXX V

SEF534Z

12. Select “SELF-DIAG RESULTS” mode with CONSULT-II.
13. Confirm that 1st trip DTC is not detected.
    If 1st trip DTC is detected, go to EC-310, "Diagnosis Procedure".

SELF DIAG RESULTS	
DTC RESULTS	TIME
NO DTC IS DETECTED. FURTHER TESTING MAY BE REQUIRED.	

SEF535Z

Overall Function Check

INFOID:0000000001702818

Use this procedure to check the overall function of the three way catalyst (manifold). During this check, a 1st trip DTC might not be confirmed.

WITH GST

1. Start engine and warm it up to the normal operating temperature.
2. Turn ignition switch OFF and wait at least 10 seconds.
3. Start engine and keep the engine speed between 3,500 and 4,000 rpm for at least 1 minute under no load.
4. Let engine idle for 1 minute.
5. Open engine hood.
6. Set voltmeter probe between ECM terminals 50 (HO2S2 signal) and ground.
7. Keep engine speed at 2,500 rpm constant under no load.
8. Make sure that the voltage does not vary for more than 5 seconds.
   If the voltage fluctuation cycle takes less than 5 seconds, go to EC-310, "Diagnosis Procedure".
   - 1 cycle: 0.6 - 1.0 → 0 - 0.3 → 0.6 - 1.0

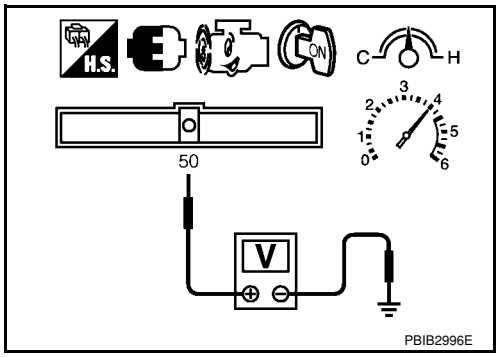

PBIB2996E

Diagnosis Procedure

INFOID:0000000001702819

1. CHECK EXHAUST SYSTEM

Visually check exhaust tubes and muffler for dent.

OK or NG

OK >> GO TO 2.
NG >> Repair or replace.

2. CHECK EXHAUST GAS LEAK

1. Start engine and run it at idle.
2. Listen for an exhaust gas leak before the three way catalyst (manifold).

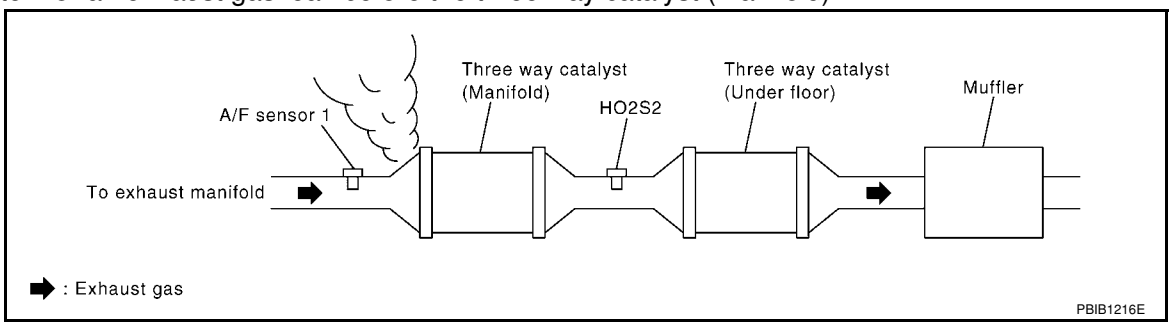

OK or NG

OK >> GO TO 3.
NG >> Repair or replace.

3. CHECK INTAKE AIR LEAK

Listen for an intake air leak after the mass air flow sensor.

OK or NG

OK >> GO TO 4.
NG >> Repair or replace.

4. CHECK IGNITION TIMING

Check the following items. Refer to EC-69, "Basic Inspection".

Items	Specifications
Target idle speed	A/T: 700 ± 50 rpm (in P or N position)
	CVT: 700 ± 50 rpm (in P or N position)
	M/T: 700 ± 50 rpm (in Neutral position)
Ignition timing	A/T: 13 ± 5° BTDC (in P or N position)
	CVT: 13 ± 5° BTDC (in P or N position)
	M/T: 13 ± 5° BTDC (in Neutral position)

OK or NG

OK >> GO TO 5.
NG >> Follow the EC-69, "Basic Inspection".

5. CHECK FUEL INJECTOR

1. Stop engine and turn ignition switch OFF.
2. Disconnect ECM harness connector.
3. Turn ignition switch ON.
4. Check voltage between ECM terminals 25, 29, 30, 31 and ground with CONSULT-II or tester.
   Refer to Wiring Diagram for fuel injectors, EC-522, "Wiring Diagram".

Voltage: Battery voltage

OK or NG

OK >> GO TO 6.
NG >> Perform EC-523, "Diagnosis Procedure".

6. CHECK FUNCTION OF IGNITION COIL-I

CAUTION:
Do the following procedure in the place where ventilation is good without the combustible.

1. Turn ignition switch OFF.
2. Remove fuel pump (1) fuse in IPDM E/R (2) to release fuel pressure.
   NOTE:
   Do not use CONSULT-II to release fuel pressure, or fuel pressure applies again during the following procedure.
- ⇦: Vehicle front
3. Start engine.
4. After engine stalls, crank it two or three times to release all fuel pressure.
5. Turn ignition switch OFF.
6. Remove all ignition coil harness connectors to avoid the electrical discharge from the ignition coils.
7. Remove ignition coil and spark plug of the cylinder to be checked.
8. Crank engine for 5 seconds or more to remove combustion gas in the cylinder.
9. Connect spark plug and harness connector to ignition coil.
10. Fix ignition coil using a rope etc. with gap of 13 - 17 mm between the edge of the spark plug and grounded metal portion as shown in the figure.
11. Crank engine for about 3 seconds, and check whether spark is generated between the spark plug and the grounded metal portion.

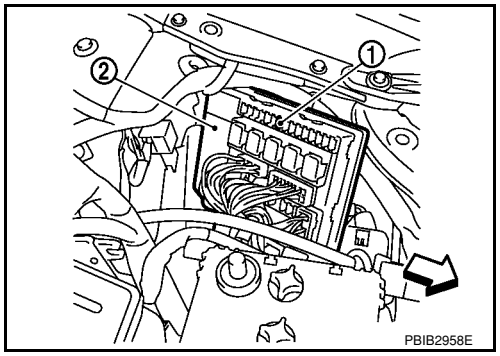

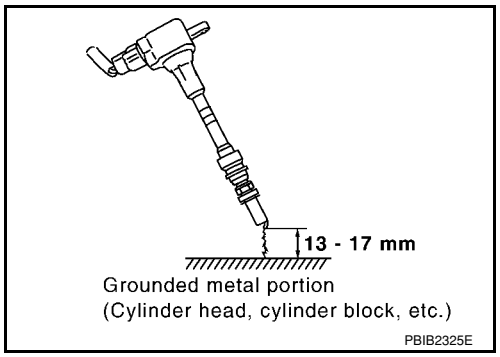

Spark should be generated.

CAUTION:
- **Do not approach to the spark plug and the ignition coil within 50cm. Be careful not to get an electrical shock while checking, because the electrical discharge voltage becomes 20kV or more.**
- **It might cause to damage the ignition coil if the gap of more than 17 mm is taken.**

NOTE:
When the gap is less than 13 mm, the spark might be generated even if the coil is malfunctioning.

OK or NG

OK >> GO TO 10.
NG >> GO TO 7.

7. CHECK FUNCTION OF IGNITION COIL-II

1. Turn ignition switch OFF.
2. Disconnect spark plug and connect a known-good spark plug.
3. Crank engine for about 3 seconds, and recheck whether spark is generated between the spark plug and the grounded metal portion.

Spark should be generated.

OK or NG

OK >> GO TO 8.
NG >> Check ignition coil, power transistor and their circuits. Refer to EC-531.

8. CHECK SPARK PLUG

Check the initial spark plug for fouling, etc.

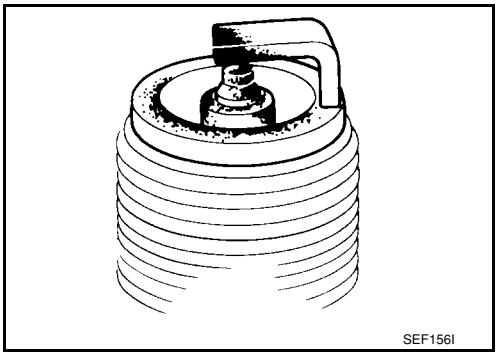

OK or NG

OK >> Replace spark plug(s) with standard type one(s). For spark plug type, refer to MA-17, "Changing Spark Plugs".

NG >> 1. Repair or clean spark plug.
2. GO TO 9.

9. CHECK FUNCTION OF IGNITION COIL-III

1. Reconnect the initial spark plugs.
2. Crank engine for about 3 seconds, and recheck whether spark is generated between the spark plug and the grounded portion.

Spark should be generated.

OK or NG

OK >> **INSPECTION END**

NG >> Replace spark plug(s) with standard type one(s). For spark plug type, refer to MA-17, "Changing Spark Plugs".

10. CHECK FUEL INJECTOR

1. Turn ignition switch OFF.
2. Remove fuel injector assembly.
   Refer to EM-33.
   Keep fuel hose and all fuel injectors connected to fuel tube.
3. Disconnect all ignition coil harness connectors.
4. Reconnect all fuel injector harness connectors disconnected.
5. Turn ignition switch ON.
   Make sure fuel does not drip from fuel injector.

OK or NG

OK (Does not drip.)>>GO TO 11.

NG (Drips.)>>Replace the fuel injector(s) from which fuel is dripping.

11. CHECK INTERMITTENT INCIDENT

Refer to EC-136.

Trouble is fixed.>>**INSPECTION END**

Trouble is not fixed.>>Replace three way catalyst (manifold).

DTC P0441 EVAP CONTROL SYSTEM

System Description

INFOID:0000000001702820

NOTE:
If DTC P0441 is displayed with other DTC such as P2122, P2123 P2127, P2128, P2138, first perform trouble diagnosis for other DTC.

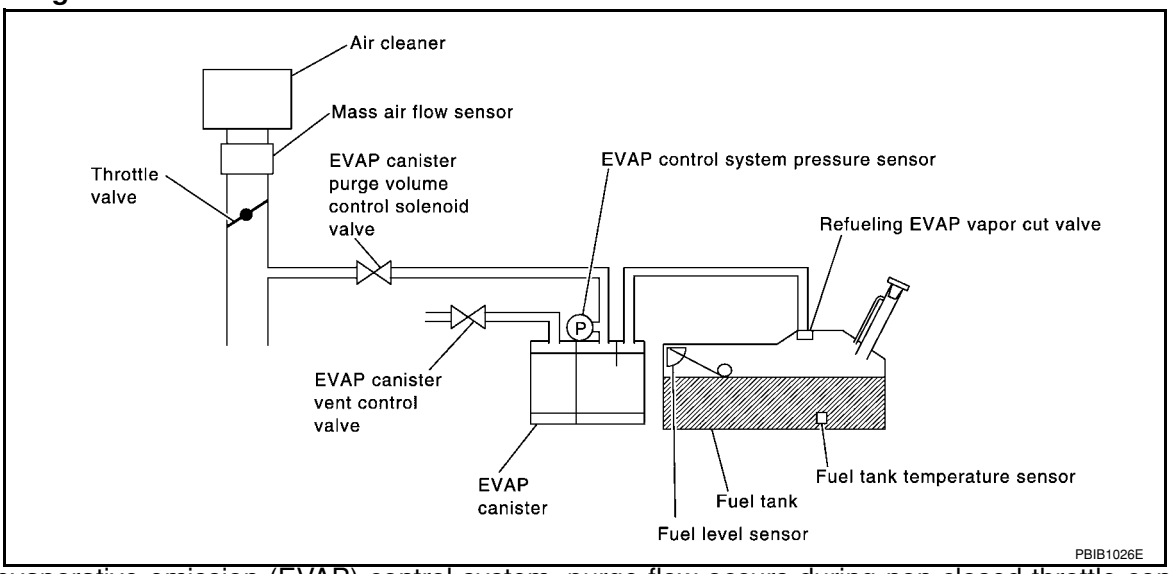

In this evaporative emission (EVAP) control system, purge flow occurs during non-closed throttle conditions. Purge volume is related to air intake volume. Under normal purge conditions (non-closed throttle), the EVAP canister purge volume control solenoid valve is open to admit purge flow. Purge flow exposes the EVAP control system pressure sensor to intake manifold vacuum.

On Board Diagnosis Logic

INFOID:0000000001702821

Under normal conditions (non-closed throttle), sensor output voltage indicates if pressure drop and purge flow are adequate. If not, a malfunction is determined.

DTC No.	Trouble diagnosis name	DTC detecting condition	Possible cause
P0441 0441	EVAP control system incorrect purge flow	• EVAP control system does not operate properly. • EVAP control system has a leak between intake manifold and EVAP control system pressure sensor.	• EVAP canister purge volume control solenoid valve stuck closed • EVAP control system pressure sensor and the circuit • Loose, disconnected or improper connection of rubber tube • Blocked rubber tube • Cracked EVAP canister • EVAP canister purge volume control solenoid valve circuit • Accelerator pedal position sensor • Blocked purge port • EVAP canister vent control valve

DTC Confirmation Procedure

INFOID:0000000001702822

CAUTION:
Always drive vehicle at a safe speed.
NOTE:
If DTC Confirmation Procedure has been previously conducted, always turn ignition switch OFF and wait at least 10 seconds before conducting the next test.
TESTING CONDITION:
Always perform test at a temperature of 5°C (41°F) or more.

WITH CONSULT-II

1. Start engine and warm it up to normal operating temperature.
2. Turn ignition switch OFF and wait at least 10 seconds.
3. Start engine and let it idle for at least 70 seconds.
4. Select “PURG FLOW P0441” of “EVAPORATIVE SYSTEM” in “DTC CONFIRMATION” mode with CONSULT-II.
5. Touch “START”.
   If “COMPLETED” is displayed, go to step 7.
6. When the following conditions are met, “TESTING” will be displayed on the CONSULT-II screen. Maintain the conditions continuously until “TESTING” changes to “COMPLETED”. (It will take at least 35 seconds.)

Shift lever	Suitable position
VHCL SPEED SE	32 - 120 km/h (20 - 75 MPH)
ENG SPEED	500 - 3,800 rpm
B/FUEL SCHDL	1.0 - 10.0 msec
COOLAN TEMP/S	More than 0°C

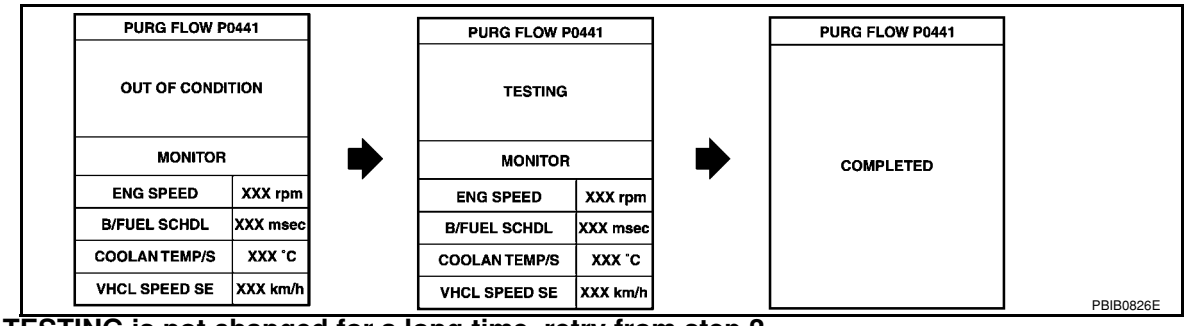

If TESTING is not changed for a long time, retry from step 2.

7. Make sure that “OK” is displayed after touching “SELF-DIAG RESULTS”. If “NG” is displayed, refer to EC-315, "Diagnosis Procedure".

Overall Function Check

INFOID:0000000001702823

Use this procedure to check the overall monitoring function of the EVAP control system purge flow monitoring. During this check, a 1st trip DTC might not be confirmed.

WITH GST

1. Lift up drive wheels.
2. Start engine and warm it up to normal operating temperature.
3. Turn ignition switch OFF and wait at least 10 seconds.
4. Start engine and wait at least 70 seconds.
5. Set voltmeter probes to ECM terminals 42 (EVAP control system pressure sensor signal) and ground.
6. Check EVAP control system pressure sensor value at idle speed and note it.
7. Establish and maintain the following conditions for at least 1 minute.

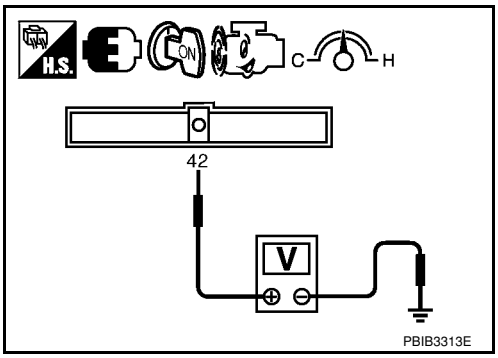

Air conditioner switch	ON
Headlamp switch	ON
Rear window defogger switch	ON
Engine speed	Approx. 3,000 rpm
Shift lever	Any position other than P, N or R

8. Verify that EVAP control system pressure sensor value stays 0.1V less than the value at idle speed (measured at step 6) for at least 1 second.
9. If NG, go to EC-315, "Diagnosis Procedure".

Diagnosis Procedure

INFOID:0000000001702824

1. CHECK EVAP CANISTER

1. Turn ignition switch OFF.
2. Check EVAP canister for cracks.

OK or NG

OK (With CONSULT-II)>>GO TO 2.
OK (Without CONSULT-II)>>GO TO 3.
NG >> Replace EVAP canister.

2. CHECK PURGE FLOW

With CONSULT-II

1. Disconnect vacuum hose connected to EVAP canister purge volume control solenoid valve at EVAP service port and install vacuum gauge. For the location of EVAP service port, refer to EC-31, "Description".
2. Start engine and let it idle.
3. Select “PURG VOL CONT/V” in “ACTIVE TEST” mode with CONSULT-II.
4. Rev engine up to 2,000 rpm.
5. Touch “Qd” and “Qu” on CONSULT-II screen to adjust “PURG VOL CONT/V” opening and check vacuum existence.

PURG VOL CONT/V	VACUUM
100%	Should exist.
0%	should not exist.

ACTIVE TEST	
PURG VOL CONT/V	XXX %
MONITOR	
ENG SPEED	XXX rpm
A/F ALPHA-B1	XXX %

PBIB1786E

OK or NG

OK >> GO TO 7.
NG >> GO TO 4.

3. CHECK PURGE FLOW

Without CONSULT-II

1. Start engine and warm it up to normal operating temperature.
2. Stop engine.
3. Disconnect vacuum hose connected to EVAP canister purge volume control solenoid valve at EVAP service port and install vacuum gauge. For the location of EVAP service port, refer to EC-31, "Description".
4. Start engine and let it idle.
   Do not depress accelerator pedal even slightly.
5. Check vacuum gauge indication before 60 seconds passed after starting engine.

   Vacuum should not exist.

6. Revving engine up to 2,000 rpm after 100 seconds passed after starting engine.

   Vacuum should exist.

OK or NG

OK >> GO TO 7.
NG >> GO TO 4.

4. CHECK EVAP PURGE LINE

1. Turn ignition switch OFF.
2. Check EVAP purge line for improper connection or disconnection.
   Refer to EC-31, "Description".

OK or NG

OK >> GO TO 5.
NG >> Repair it.

5. CHECK EVAP PURGE HOSE AND PURGE PORT

1. Disconnect purge hoses connected to EVAP service port **A** and EVAP canister purge volume control solenoid valve **B**.
2. Blow air into each hose and EVAP purge port **C**.

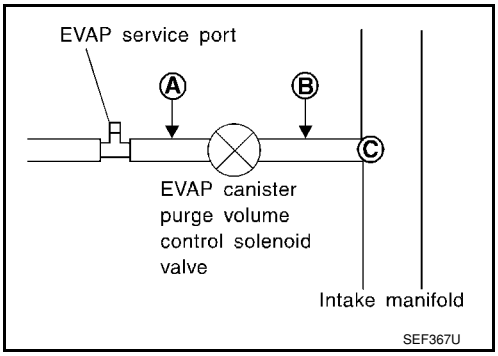

3. Check that air flows freely.

OK or NG

OK (With CONSULT-II)>>GO TO 6.
OK (Without CONSULT-II)>>GO TO 7.
NG >> Repair or clean hoses and/or purge port.

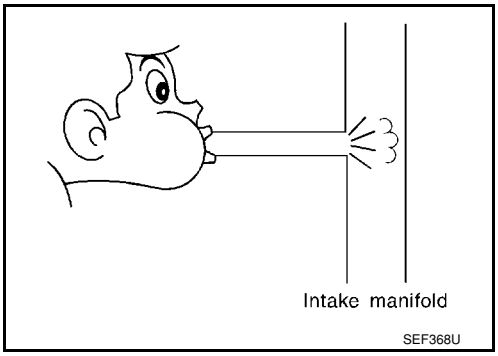

6. CHECK EVAP CANISTER PURGE VOLUME CONTROL SOLENOID VALVE

With CONSULT-II

1. Start engine.
2. Perform “PURG VOL CONT/V” in “ACTIVE TEST” mode with CONSULT-II. Check that engine speed varies according to the valve opening.

OK or NG

OK >> GO TO 8.
NG >> GO TO 7.

ACTIVE TEST	
PURG VOL CONT/V	XXX %
MONITOR	
ENG SPEED	XXX rpm
A/F ALPHA-B1	XXX %

PBIB1786E

7. CHECK EVAP CANISTER PURGE VOLUME CONTROL SOLENOID VALVE

Refer to EC-337, "Component Inspection".

OK or NG

OK >> GO TO 8.
NG >> Replace EVAP canister purge volume control solenoid valve.

8. CHECK EVAP CONTROL SYSTEM PRESSURE SENSOR CONNECTOR

1. Disconnect EVAP control system pressure sensor harness connector.
2. Check connectors for water.

Water should not exist

OK or NG

OK >> GO TO 9.
NG >> Replace EVAP control system pressure sensor.

9. CHECK EVAP CONTROL SYSTEM PRESSURE SENSOR FUNCTION

Refer to EC-355 or DTC P0452 and EC-362 for DTC P0453.

OK or NG

OK >> GO TO 10.
NG >> Replace EVAP control system pressure sensor.

10. CHECK RUBBER TUBE FOR CLOGGING

1. Disconnect rubber tube connected to EVAP canister vent control valve.
2. Check the rubber tube for clogging.

OK or NG

OK >> GO TO 11.
NG >> Clean the rubber tube using an air blower.

11. CHECK EVAP CANISTER VENT CONTROL VALVE

Refer to EC-343, "Component Inspection".

OK or NG

OK >> GO TO 12.
NG >> Replace EVAP canister vent control valve.

12. CHECK EVAP PURGE LINE

Inspect EVAP purge line (pipe and rubber tube). Check for evidence of leaks.
Refer to EC-31, "Description".

OK or NG

OK >> GO TO 13.
NG >> Replace it.

13. CLEAN EVAP PURGE LINE

Clean EVAP purge line (pipe and rubber tube) using air blower.

>> GO TO 14.

14. CHECK INTERMITTENT INCIDENT

Refer to EC-136.

>> **INSPECTION END**

DTC P0442 EVAP CONTROL SYSTEM

On Board Diagnosis Logic

INFOID:0000000001702825

This diagnosis detects leaks in the EVAP purge line using engine intake manifold vacuum.
If pressure does not increase, the ECM will check for leaks in the line between the fuel tank and EVAP canister purge volume control solenoid valve, under the following Vacuum test conditions.
The EVAP canister vent control valve is closed to shut the EVAP purge line off. The EVAP canister purge volume control solenoid valve will then be opened to depressurize the EVAP purge line using intake manifold vacuum. After this occurs, the EVAP canister purge volume control solenoid valve will be closed.

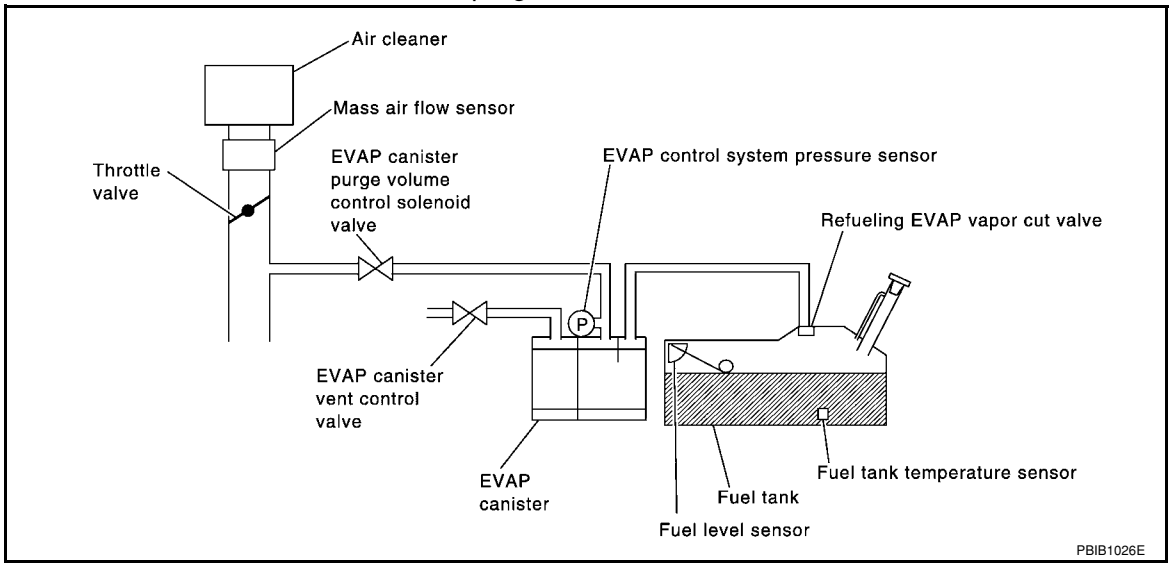

DTC No.	Trouble diagnosis name	DTC detecting condition	Possible cause
P0442 0442	EVAP control system small leak detected (negative pressure)	EVAP control system has a leak, EVAP control system does not operate properly.	• Incorrect fuel tank vacuum relief valve • Incorrect fuel filler cap used • Fuel filler cap remains open or fails to close. • Foreign matter caught in fuel filler cap. • Leak is in line between intake manifold and EVAP canister purge volume control solenoid valve. • Foreign matter caught in EVAP canister vent control valve. • EVAP canister or fuel tank leaks • EVAP purge line (pipe and rubber tube) leaks • EVAP purge line rubber tube bent • Loose or disconnected rubber tube • EVAP canister vent control valve and the circuit • EVAP canister purge volume control solenoid valve and the circuit • Fuel tank temperature sensor • O-ring of EVAP canister vent control valve is missing or damaged • EVAP canister is saturated with water • EVAP control system pressure sensor • Fuel level sensor and the circuit • Refueling EVAP vapor cut valve • ORVR system leaks

CAUTION:
- **Use only a genuine NISSAN fuel filler cap as a replacement. If an incorrect fuel filler cap is used, the MIL may come on.**
- **If the fuel filler cap is not tightened properly, the MIL may come on.**
- **Use only a genuine NISSAN rubber tube as a replacement.**

DTC Confirmation Procedure

INFOID:0000000001702826

NOTE:

If DTC Confirmation Procedure has been previously conducted, always turn ignition switch OFF and wait at least 10 seconds before conducting the next test.

TESTING CONDITION:

- **Perform "DTC WORK SUPPORT" when the fuel level is between 1/4 and 3/4 full, and vehicle is placed on flat level surface.**
- **Always perform test at a temperature of 0 to 30°C (32 to 86°F).**
- **Open engine hood before conducting following procedure.**

WITH CONSULT-II

1. Turn ignition switch ON.
2. Turn ignition switch OFF and wait at least 10 seconds.
3. Turn ignition switch ON and select "DATA MONITOR" mode with CONSULT-II.
4. Check the following conditions are met.
   COOLAN TEMP/S: 0 - 70°C (32 - 158°F)
   INT/A TEMP SE: 0 - 30°C (32 - 86°F)
5. Select "EVAP SML LEAK P0442/P1442" of "EVAPORATIVE SYSTEM" in "DTC WORK SUPPORT" mode with CONSULT-II. Follow the instruction displayed.

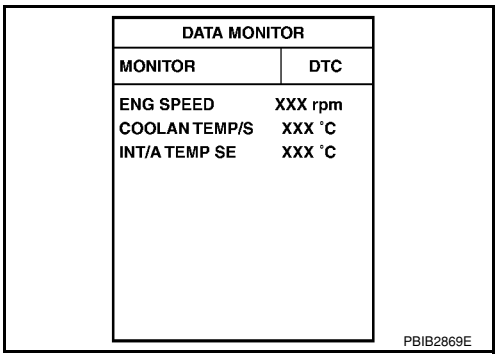

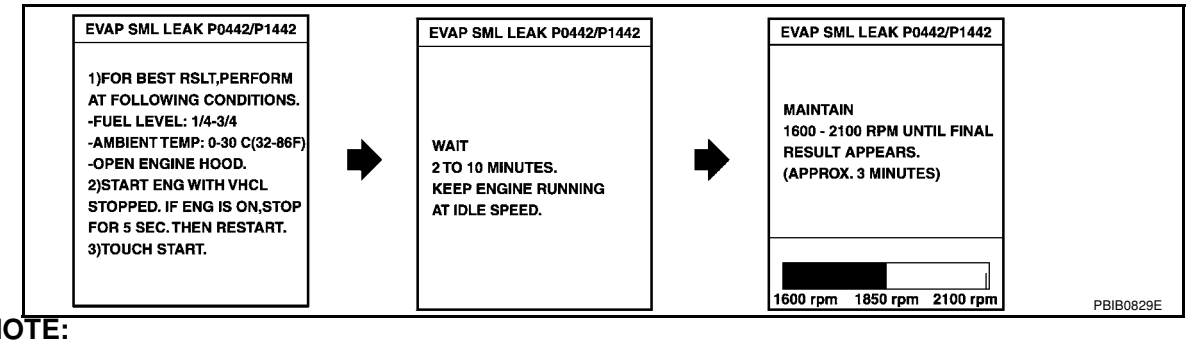

NOTE:
If the engine speed cannot be maintained within the range displayed on the CONSULT-II screen, go to EC-69, "Basic Inspection".

6. Make sure that "OK" is displayed.
   If "NG" is displayed, refer to EC-320, "Diagnosis Procedure".
   NOTE:
   Make sure that EVAP hoses are connected to the EVAP canister purge volume control solenoid valve properly.

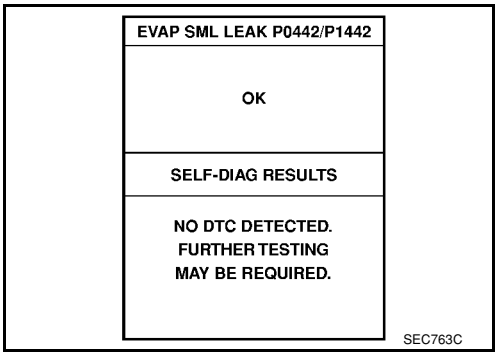

WITH GST

NOTE:
Be sure to read the explanation of Driving Pattern on EC-47, "Emission-related Diagnostic Information" before driving vehicle.

1. Start engine.
2. Drive vehicle according to Driving Pattern, EC-47, "Emission-related Diagnostic Information".
3. Stop vehicle.
4. Turn ignition switch OFF and wait at least 10 seconds and then turn ignition switch ON.
5. Select Service $07 with GST.

- If P0442 is displayed on the screen, go to EC-320, "Diagnosis Procedure".
- If P0441 is displayed on the screen, go to EC-315, "Diagnosis Procedure" for DTC P0441.

Diagnosis Procedure

INFOID:0000000001702827

1. CHECK FUEL FILLER CAP DESIGN

1. Turn ignition switch OFF.
2. Check for genuine NISSAN fuel filler cap design.

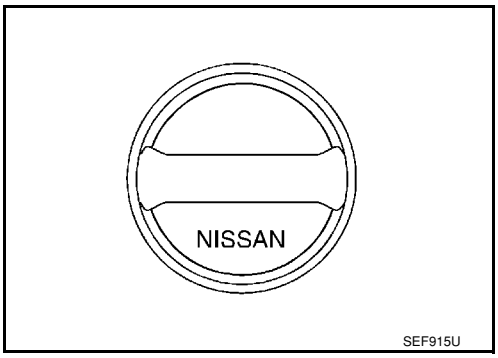

OK or NG

OK >> GO TO 2.
NG >> Replace with genuine NISSAN fuel filler cap.

2. CHECK FUEL FILLER CAP INSTALLATION

Check that the cap is tightened properly by rotating the cap clockwise.

OK or NG

OK >> GO TO 3.
NG >> 1. Open fuel filler cap, then clean cap and fuel filler neck threads using air blower.
2. Retighten until reteaching sound is heard.

3. CHECK FUEL FILLER CAP FUNCTION

Check for air releasing sound while opening the fuel filler cap.

OK or NG

OK >> GO TO 5.
NG >> GO TO 4.

4. CHECK FUEL TANK VACUUM RELIEF VALVE

Refer to EC-33, "Component Inspection".

OK or NG

OK >> GO TO 5.
NG >> Replace fuel filler cap with a genuine one.

5. INSTALL THE PRESSURE PUMP

To locate the EVAP leak, install EVAP service port adapter and pressure pump to EVAP service port securely. For the location of EVAP service port (2), refer to EC-31, "Description".

- EVAP canister purge volume control solenoid valve (1)
- ⇦: Vehicle front

NOTE:
Improper installation of the EVAP service port adapter to the EVAP service port may cause leaking.

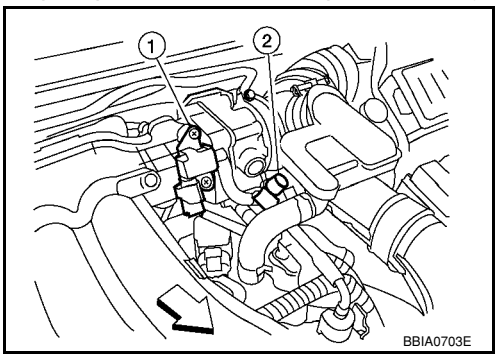

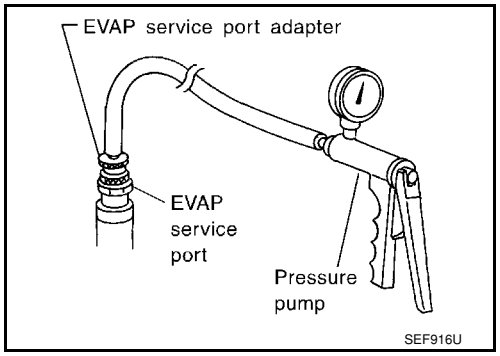

With CONSULT-II>>GO TO 6.
Without CONSULT-II>>GO TO 7.

6. CHECK FOR EVAP LEAK

With CONSULT-II

1. Turn ignition switch ON.
2. Select “EVAP SYSTEM CLOSE” of “WORK SUPPORT” mode with CONSULT-II.
3. Touch “START” and apply pressure into the EVAP line until the pressure indicator reaches the middle of the bar graph.
   CAUTION:
   - **Never use compressed air or a high pressure pump.**
   - **Do not exceed 4.12 kPa (0.042 kg/cm^2, 0.6 psi) of pressure in the system.**

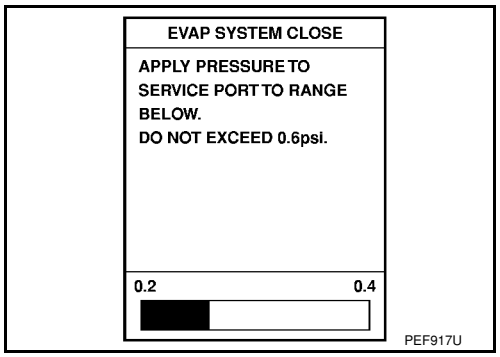

4. Using EVAP leak detector, locate the EVAP leak. For the leak detector, refer to the instruction manual for more details.
   Refer to EC-31, "Description".

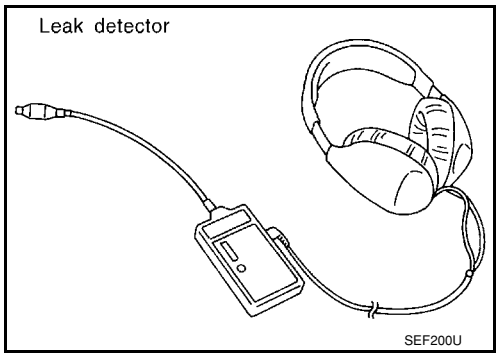

OK or NG

OK >> GO TO 8.
NG >> Repair or replace.

7. CHECK FOR EVAP LEAK

Without CONSULT-II

1. Turn ignition switch OFF.
2. Apply 12 volts DC to EVAP canister vent control valve. The valve will close. (Continue to apply 12 volts until the end of test.)
   - EVAP control system pressure sensor (1)
   - EVAP canister (2)
   - EVAP canister vent control valve (3)
3. Pressurize the EVAP line using pressure pump with 1.3 to 2.7 kPa (10 to 20 mmHg, 0.39 to 0.79 inHg), then remove pump and EVAP service port adapter.
   CAUTION:
   - **Never use compressed air or a high pressure pump.**
   - **Do not exceed 4.12 kPa (0.042 kg/cm^2, 0.6 psi) of pressure in the system.**

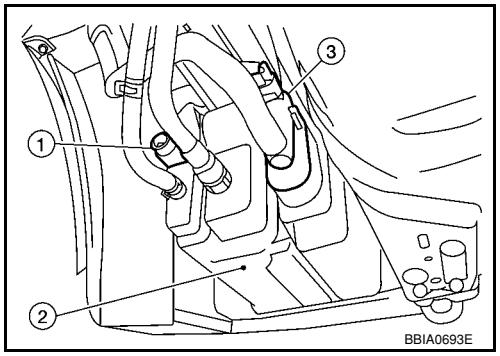

4. Using EVAP leak detector, locate the EVAP leak. For the leak detector, refer to the instruction manual for more details. Refer to EC-31, "Description".

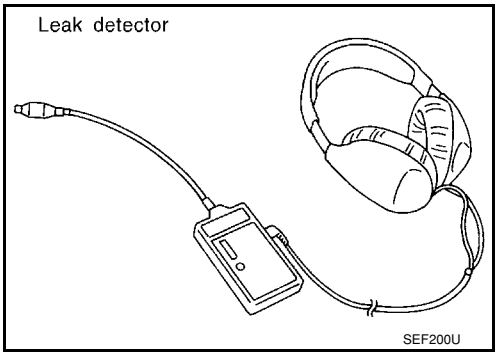

OK or NG

OK >> GO TO 8.
NG >> Repair or replace.

8. CHECK EVAP CANISTER VENT CONTROL VALVE

Check the following,
- EVAP canister vent control valve is installed properly.
  Refer to EC-35, "Removal and Installation".
- EVAP canister vent control valve.
  Refer to EC-343, "Component Inspection".

OK or NG

OK >> GO TO 9.
NG >> Repair or replace EVAP canister vent control valve and O-ring.

9. CHECK IF EVAP CANISTER SATURATED WITH WATER

1. Remove EVAP canister with EVAP canister vent control valve and EVAP control system pressure sensor attached.
2. Does water drain from the EVAP canister?

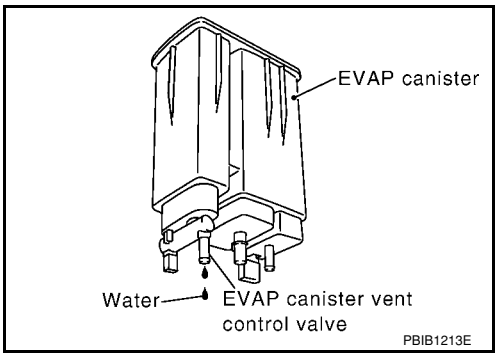

Yes or No

Yes >> GO TO 10.
No (With CONSULT-II)>>GO TO 12.
No (Without CONSULT-II)>>GO TO 13.

10. CHECK EVAP CANISTER

Weigh the EVAP canister with the EVAP canister vent control valve and EVAP control system pressure sensorattached.

The weight should be less than 1.9 kg (4.2 lb).

OK or NG

OK (With CONSULT-II)>>GO TO 12.
OK (Without CONSULT-II)>>GO TO 13.
NG >> GO TO 11.

11. DETECT MALFUNCTIONING PART

Check the following.
- EVAP canister for damage
- EVAP hose connected to EVAP canister for clogging or poor connection

>> Repair hose or replace EVAP canister.

12. CHECK EVAP CANISTER PURGE VOLUME CONTROL SOLENOID VALVE OPERATION

With CONSULT-II

1. Disconnect vacuum hose to EVAP canister purge volume control solenoid valve at EVAP service port.
2. Start engine.
3. Perform “PURG VOL CONT/V” in “ACTIVE TEST” mode.
4. Touch “Qu” on CONSULT-II screen to increase “PURG VOL CONT/V” opening to 100%.

5. Check vacuum hose for vacuum.

Vacuum should exist.

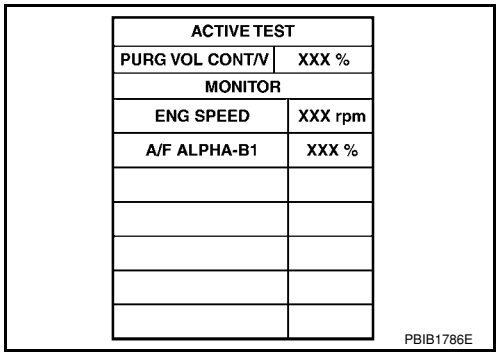

ACTIVE TEST	
PURG VOL CONT/V	XXX %
MONITOR	
ENG SPEED	XXX rpm
A/F ALPHA-B1	XXX %

PBIB1786E

OK or NG

OK >> GO TO 15.
NG >> GO TO 14.

13. CHECK EVAP CANISTER PURGE VOLUME CONTROL SOLENOID VALVE OPERATION

Without CONSULT-II

1. Start engine and warm it up to normal operating temperature.
2. Stop engine.
3. Disconnect vacuum hose to EVAP canister purge volume control solenoid valve at EVAP service port.
4. Start engine and let it idle for at least 80 seconds.
5. Check vacuum hose for vacuum when revving engine up to 2,000 rpm.

Vacuum should exist.

OK or NG

OK >> GO TO 16.
NG >> GO TO 14.

14. CHECK VACUUM HOSE

Check vacuum hoses for clogging or disconnection. Refer to EC-99, "Vacuum Hose Drawing".

OK or NG

OK >> GO TO 15.
NG >> Repair or reconnect the hose.

15. CHECK EVAP CANISTER PURGE VOLUME CONTROL SOLENOID VALVE

Refer to EC-337, "Component Inspection".

OK or NG

OK >> GO TO 16.
NG >> Replace EVAP canister purge volume control solenoid valve.

16. CHECK FUEL TANK TEMPERATURE SENSOR

Refer to EC-273, "Component Inspection".

OK or NG

OK >> GO TO 17.
NG >> Replace fuel level sensor unit.

17. CHECK EVAP CONTROL SYSTEM PRESSURE SENSOR

Refer to EC-361, "Component Inspection".

OK or NG

OK >> GO TO 18.
NG >> Replace EVAP control system pressure sensor.

18. CHECK EVAP PURGE LINE

Check EVAP purge line (pipe, rubber tube, fuel tank and EVAP canister) for cracks or improper connection. Refer to EC-31.

OK or NG

OK >> GO TO 19.
NG >> Repair or reconnect the hose.

19. CLEAN EVAP PURGE LINE

Clean EVAP purge line (pipe and rubber tube) using air blower.

>> GO TO 20.

20. CHECK EVAP/ORVR LINE

Check EVAP/ORVR line between EVAP canister and fuel tank for clogging, kink, looseness and improper connection. For location, refer to EC-38.

OK or NG

OK >> GO TO 21.
NG >> Repair or replace hoses and tubes.

21. CHECK RECIRCULATION LINE

Check recirculation line between filler neck tube and fuel tank for clogging, kink, cracks, looseness and improper connection.

OK or NG

OK >> GO TO 22.
NG >> Repair or replace hoses, tubes or filler neck tube.

22. CHECK REFUELING EVAP VAPOR CUT VALVE

Refer to EC-40, "Component Inspection".

OK or NG

OK >> GO TO 23.
NG >> Replace refueling EVAP vapor cut valve with fuel tank.

23. CHECK FUEL LEVEL SENSOR

Refer to FL-5.

OK or NG

OK >> GO TO 24.
NG >> Replace fuel level sensor unit.

24. CHECK INTERMITTENT INCIDENT

Refer to EC-136.

>> **INSPECTION END**

DTC P0443 EVAP CANISTER PURGE VOLUME CONTROL SOLENOID VALVE

Description

INFOID:0000000001702828

SYSTEM DESCRIPTION

Sensor	Input Signal to ECM	ECM function	Actuator
Crankshaft position sensor (POS) Camshaft position sensor (PHASE)	Engine speed*1	EVAP canister purge flow control	EVAP canister purge volume control solenoid valve
Mass air flow sensor	Amount of intake air		
Engine coolant temperature sensor	Engine coolant temperature		
Battery	Battery voltage*1		
Throttle position sensor	Throttle position		
Accelerator pedal position sensor	Accelerator pedal position		
Air fuel ratio (A/F) sensor 1	Density of oxygen in exhaust gas (Mixture ratio feedback signal)		
Fuel tank temperature sensor	Fuel temperature in fuel tank		
Wheel sensor	Vehicle speed*2		

*1: ECM determines the start signal status by the signals of engine speed and battery voltage.

*2: This signal is sent to the ECM though CAN communication line.

This system controls flow rate of fuel vapor from the EVAP canister. The opening of the vapor by-pass passage in the EVAP canister purge volume control solenoid valve changes to control the flow rate. The EVAP canister purge volume control solenoid valve repeats ON/OFF operation according to the signal sent from the ECM. The opening of the valve varies for optimum engine control. The optimum value stored in the ECM is determined by considering various engine conditions. When the engine is operating, the flow rate of fuel vapor from the EVAP canister is regulated as the air flow changes.

COMPONENT DESCRIPTION

The EVAP canister purge volume control solenoid valve uses a ON/OFF duty to control the flow rate of fuel vapor from the EVAP canister. The EVAP canister purge volume control solenoid valve is moved by ON/OFF pulses from the ECM. The longer the ON pulse, the greater the amount of fuel vapor that will flow through the valve.

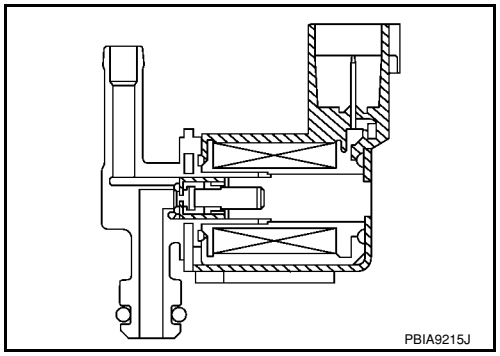

CONSULT-II Reference Value in Data Monitor Mode

INFOID:0000000001702829

Specification data are reference values.

MONITOR ITEM	CONDITION		SPECIFICATION
PURG VOL C/V	• Engine: After warming up • Shift lever: P or N (A/T, CVT), Neutral (M/T) • Air conditioner switch: OFF • No load	Idle (Accelerator pedal is not depressed even slightly, after engine starting)	0%
		2,000 rpm	0 - 50%

On Board Diagnosis Logic

INFOID:0000000001702830

DTC No.	Trouble diagnosis name	DTC detecting condition	Possible cause
P0443 0443	EVAP canister purge volume control solenoid valve	The canister purge flow is detected during the specified driving conditions, even when EVAP canister purge volume control solenoid valve is completely closed.	• EVAP control system pressure sensor • EVAP canister purge volume control solenoid valve (EVAP canister purge volume control solenoid valve is stuck open.) • EVAP canister vent control valve • EVAP canister • Hoses (Hoses are connected incorrectly or clogged.)

DTC Confirmation Procedure

INFOID:0000000001702831

NOTE:
If DTC Confirmation Procedure has been previously conducted, always turn ignition switch OFF and wait at least 10 seconds before conducting the next test.
TESTING CONDITION:
Always perform test at a temperature of 5°C (41°F) or more.

WITH CONSULT-II

1. Start engine and warm it up to normal operating temperature.
2. Turn ignition switch OFF and wait at least 10 seconds.
3. Turn ignition switch ON.
4. Select “PURG VOL CN/V P1444” of “EVAPORATIVE SYSTEM” in “DTC WORK SUPPORT” mode with CONSULT-II.
5. Touch “START”.

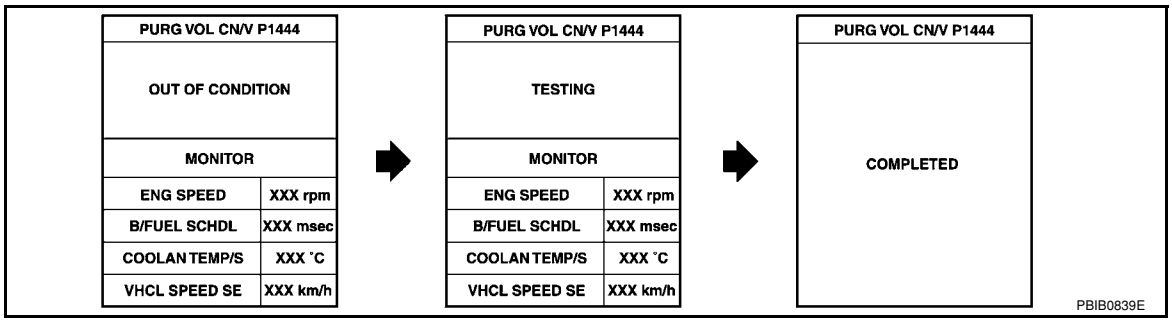

6. Start engine and let it idle until “TESTING” on CONSULT-II changes to “COMPLETED”. (It will take approximately 10 seconds.)
   If “TESTING” is not displayed after 5 minutes, retry from step 2.
7. Make sure that “OK” is displayed after touching “SELF-DIAG RESULTS”. If “NG” is displayed, refer to EC-328, "Diagnosis Procedure".

WITH GST

1. Start engine and warm it up to normal operating temperature.
2. Turn ignition switch OFF and wait at least 10 seconds.
3. Start engine and let it idle for at least 20 seconds.
4. Select Service $07 with GST.
5. If 1st trip DTC is detected, go to EC-328, "Diagnosis Procedure".

Wiring Diagram

INFOID:0000000001702832

EC-PGC/V-01

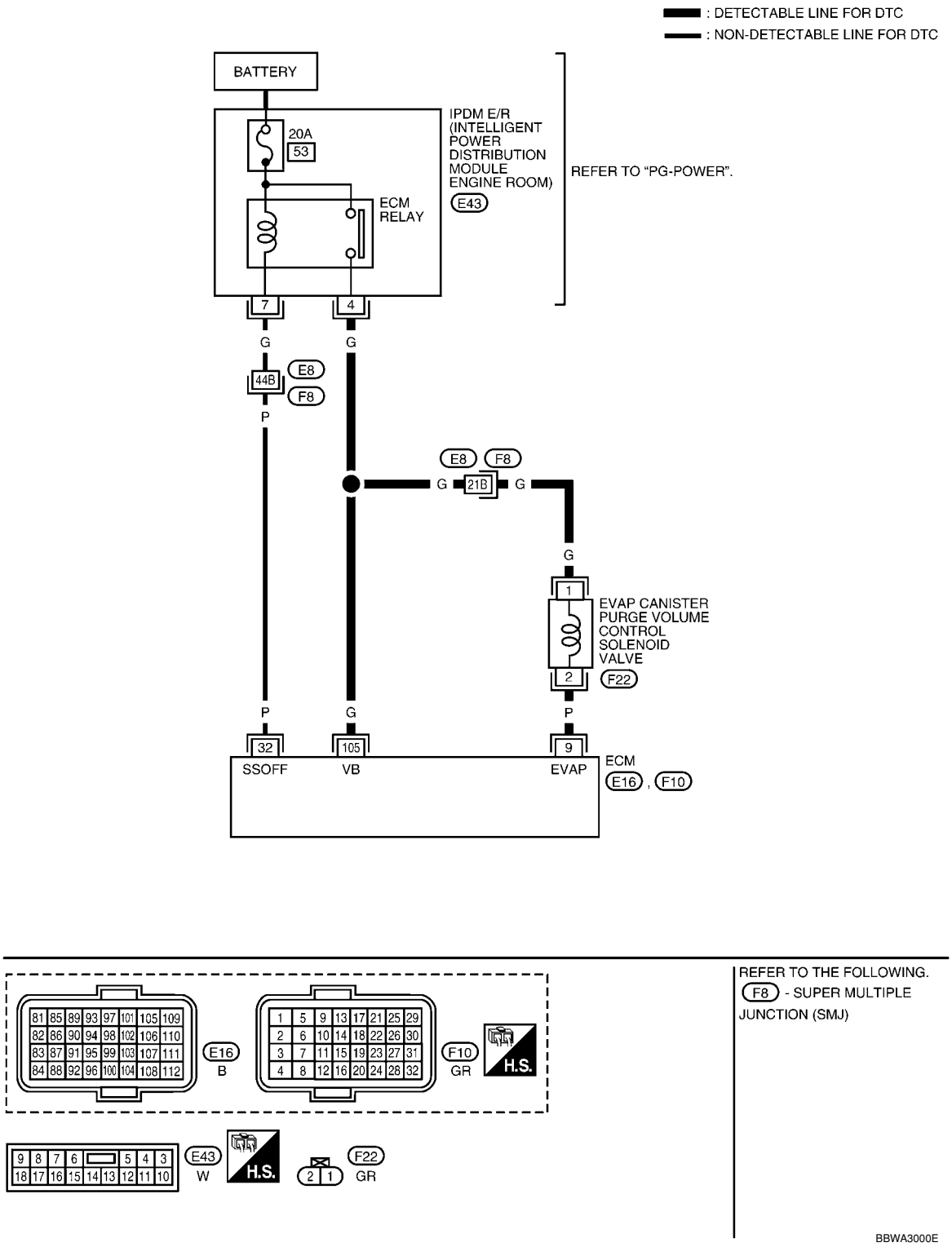

Specification data are reference values and are measured between each terminal and ground.
Pulse signal is measured by CONSULT-II.

CAUTION:

Do not use ECM ground terminals when measuring input/output voltage. Doing so may result in damage to the ECM's transistor. Use a ground other than ECM terminals, such as the ground.

TERMINAL NO.	WIRE COLOR	ITEM	CONDITION	DATA (DC Voltage)
9	P	EVAP canister purge volume control solenoid valve	**[Engine is running]** • Idle speed • Accelerator pedal: Not depressed even slightly, after engine starting.	BATTERY VOLTAGE (11 - 14V)★ 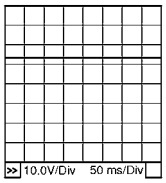 PBIB0050E
			[Engine is running] • Engine speed: About 2,000 rpm (More than 100 seconds after starting engine)	Approximately 10V★ 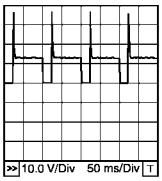 PBIB0520E
32	P	ECM relay (Self shut-off)	**[Engine is running]** **[Ignition switch: OFF]** • For a few seconds after turning ignition switch OFF	0 - 1.0V
			[Ignition switch: OFF] • More than a few seconds after turning ignition switch OFF	BATTERY VOLTAGE (11 - 14V)
105	G	Power supply for ECM	**[Ignition switch: ON]**	BATTERY VOLTAGE (11 - 14V)

★: Average voltage for pulse signal (Actual pulse signal can be confirmed by oscilloscope.)

Diagnosis Procedure

INFOID:0000000001702833

1. CHECK EVAP CANISTER PURGE VOLUME CONTROL SOLENOID VALVE POWER SUPPLY CIRCUIT

1. Turn ignition switch OFF.
2. Disconnect EVAP canister purge volume control solenoid valve (1) harness connector.

- EVAP service port (2)
- ⇦: Vehicle front

3. Turn ignition switch ON.

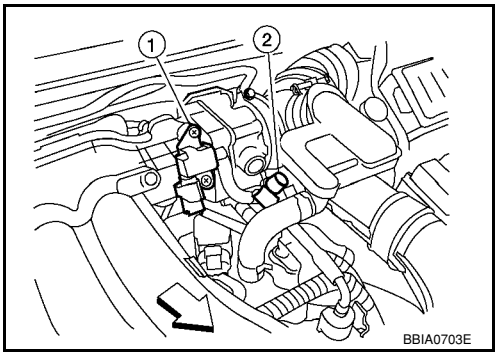

4. Check voltage between EVAP canister purge volume control solenoid valve terminal 1 and ground with CONSULT-II or tester.

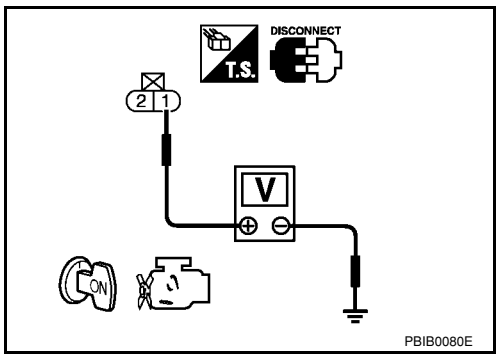

Voltage: Battery voltage

OK or NG

OK >> GO TO 3.
NG >> GO TO 2.

2. DETECT MALFUNCTIONING PART

Check the following.
- Harness connectors E8, F8
- Harness for open or short between EVAP canister purge volume control solenoid valve and IPDM E/R

>> Repair open circuit or short to ground or short to power in harness or connectors.

3. CHECK EVAP CANISTER PURGE VOLUME CONTROL SOLENOID VALVE OUTPUT SIGNAL CIRCUIT FOR OPEN AND SHORT

1. Turn ignition switch OFF.
2. Disconnect ECM harness connector.
3. Check harness continuity between ECM terminal 9 and EVAP canister purge volume control solenoid valve terminal 2. Refer to Wiring Diagram.

Continuity should exist.

4. Also check harness for short to ground and short to power.

OK or NG

OK >> GO TO 4.
NG >> Repair open circuit or short to ground or short to power in harness or connectors.

4. CHECK EVAP CONTROL SYSTEM PRESSURE SENSOR CONNECTOR

1. Disconnect EVAP control system pressure sensor harness connector.
- EVAP control system pressure sensor (1)
- EVAP canister (2)
- EVAP canister vent control valve (3)
2. Check connectors for water.

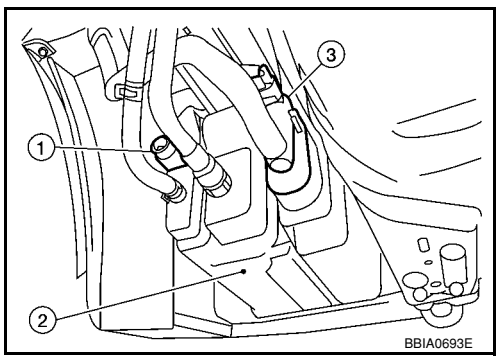

Water should not exist.

OK or NG

OK >> GO TO 5.
NG >> Replace EVAP control system pressure sensor.

5. CHECK EVAP CONTROL SYSTEM PRESSURE SENSOR

Refer to EC-361, "Component Inspection".

OK or NG

OK (With CONSULT-II)>>GO TO 6.
OK (Without CONSULT-II)>>GO TO 7.
NG >> Replace EVAP control system pressure sensor.

6. CHECK EVAP CANISTER PURGE VOLUME CONTROL SOLENOID VALVE

With CONSULT-II

1. Turn ignition switch OFF.
2. Reconnect harness connectors disconnected.
3. Start engine.

4. Perform “PURG VOL CONT/V” in “ACTIVE TEST” mode with CONSULT-II. Check that engine speed varies according to the valve opening.

ACTIVE TEST	
PURG VOL CONT/V	XXX %
MONITOR	
ENG SPEED	XXX rpm
A/F ALPHA-B1	XXX %

PBIB1786E

OK or NG

OK >> GO TO 8.
NG >> GO TO 7.

7. CHECK EVAP CANISTER PURGE VOLUME CONTROL SOLENOID VALVE

Refer to EC-331, "Component Inspection".

OK or NG

OK >> GO TO 8.
NG >> Replace EVAP canister purge volume control solenoid valve.

8. CHECK RUBBER TUBE FOR CLOGGING

1. Disconnect rubber tube connected to EVAP canister vent control valve.
2. Check the rubber tube for clogging.

OK or NG

OK >> GO TO 9.
NG >> Clean the rubber tube using an air blower.

9. CHECK EVAP CANISTER VENT CONTROL VALVE

Refer to EC-343, "Component Inspection".

OK or NG

OK >> GO TO 10.
NG >> Replace EVAP canister vent control valve.

10. CHECK IF EVAP CANISTER SATURATED WITH WATER

1. Remove EVAP canister with EVAP canister vent control valve attached.
2. Does water drain from the EVAP canister?

YES or NO

YES >> GO TO 11.
NO >> GO TO 13.

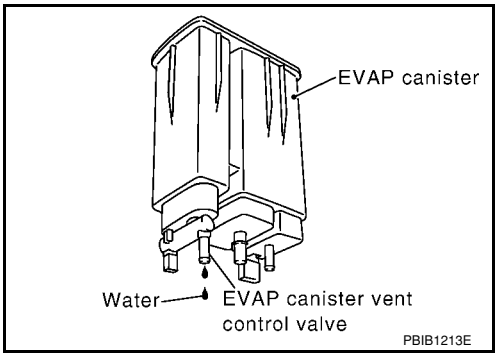

11. CHECK EVAP CANISTER

Weigh the EVAP canister with the EVAP canister vent control valve and EVAP control system pressure sensor attached.

The weight should be less than 1.9 kg (4.2 lb).

OK or NG

OK >> GO TO 13.
NG >> GO TO 12.

12. DETECT MALFUNCTIONING PART

Check the following.
- EVAP canister for damage
- EVAP hose between EVAP canister and vehicle frame for clogging or poor connection

>> Repair hose or replace EVAP canister.

13. CHECK INTERMITTENT INCIDENT

Refer to EC-136.

>> **INSPECTION END**

Component Inspection

INFOID:0000000001702834

EVAP CANISTER PURGE VOLUME CONTROL SOLENOID VALVE

With CONSULT-II

Check air passage continuity of EVAP canister purge volume control solenoid valve under the following conditions.

Condition (PURG VOL CONT/V value)	Air passage continuity between A and B
100%	Yes
0%	No

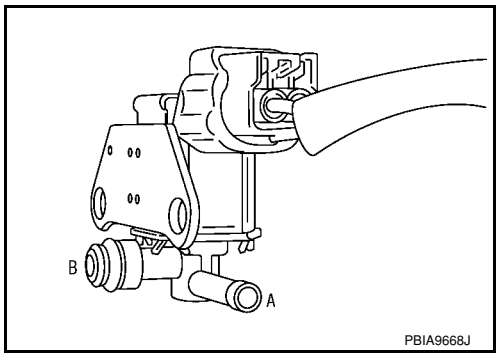

Without CONSULT-II

Check air passage continuity of EVAP canister purge volume control solenoid valve under the following conditions.

Condition	Air passage continuity between A and B
12V direct current supply between terminals 1 and 2	Yes
No supply	No

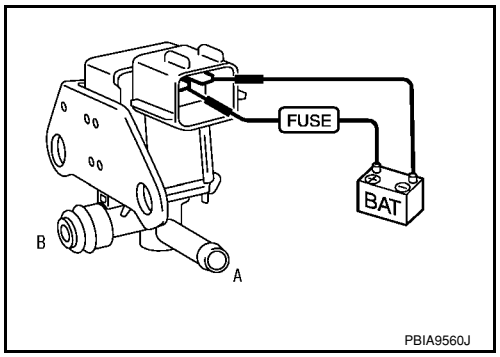

Removal and Installation

INFOID:0000000001702835

EVAP CANISTER PURGE VOLUME CONTROL SOLENOID VALVE

Refer to EM-18.

DTC P0444, P0445 EVAP CANISTER PURGE VOLUME CONTROL SOLENOID VALVE

Description

INFOID:0000000001702836

SYSTEM DESCRIPTION

Sensor	Input Signal to ECM	ECM function	Actuator
Crankshaft position sensor (POS) Camshaft position sensor (PHASE)	Engine speed*1	EVAP canister purge flow control	EVAP canister purge volume control solenoid valve
Mass air flow sensor	Amount of intake air		
Engine coolant temperature sensor	Engine coolant temperature		
Battery	Battery voltage*1		
Throttle position sensor	Throttle position		
Accelerator pedal position sensor	Accelerator pedal position		
Air fuel ratio (A/F) sensor 1	Density of oxygen in exhaust gas (Mixture ratio feedback signal)		
Fuel tank temperature sensor	Fuel temperature in fuel tank		
Wheel sensor	Vehicle speed*2		

*1: The ECM determines the start signal status by the signal of engine speed and battery voltage.

*2: This signal is sent to the ECM through CAN communication line.

This system controls flow rate of fuel vapor from the EVAP canister. The opening of the vapor by-pass passage in the EVAP canister purge volume control solenoid valve changes to control the flow rate. The EVAP canister purge volume control solenoid valve repeats ON/OFF operation according to the signal sent from the ECM. The opening of the valve varies for optimum engine control. The optimum value stored in the ECM is determined by considering various engine conditions. When the engine is operating, the flow rate of fuel vapor from the EVAP canister is regulated as the air flow changes.

COMPONENT DESCRIPTION

The EVAP canister purge volume control solenoid valve uses a ON/OFF duty to control the flow rate of fuel vapor from the EVAP canister. The EVAP canister purge volume control solenoid valve is moved by ON/OFF pulses from the ECM. The longer the ON pulse, the greater the amount of fuel vapor that will flow through the valve.

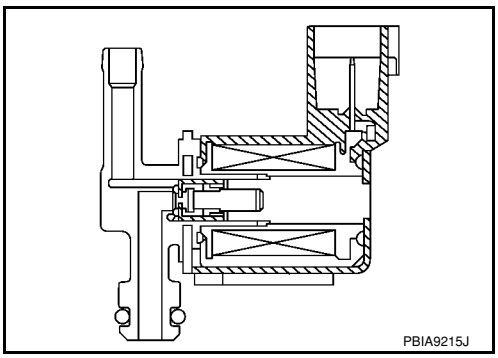

CONSULT-II Reference Value in Data Monitor Mode

INFOID:0000000001702837

Specification data are reference values.

MONITOR ITEM	CONDITION		SPECIFICATION
PURG VOL C/V	• Engine: After warming up • Shift lever: N (A/T, CVT), Neutral (M/T) • Air conditioner switch: OFF • No load	Idle (Accelerator pedal is not depressed even slightly, after engine starting)	0%
		2,000 rpm	0 - 50%

On Board Diagnosis Logic

INFOID:0000000001702838

DTC No.	Trouble diagnosis name	DTC detecting condition	Possible cause
P0444 0444	EVAP canister purge volume control solenoid valve circuit open	An excessively low voltage signal is sent to ECM through the valve	• Harness or connectors (EVAP canister purge volume control solenoid valve circuit is open or shorted.) • EVAP canister purge volume control solenoid valve
P0445 0445	EVAP canister purge volume control solenoid valve circuit shorted	An excessively high voltage signal is sent to ECM through the valve	• Harness or connectors (EVAP canister purge volume control solenoid valve circuit is shorted.) • EVAP canister purge volume control solenoid valve

DTC Confirmation Procedure

INFOID:0000000001702839

NOTE:
If DTC Confirmation Procedure has been previously conducted, always turn ignition switch OFF and wait at least 10 seconds before conducting the next test.
TESTING CONDITION:
Before performing the following procedure, confirm battery voltage is more than 11V at idle.

WITH CONSULT-II

1. Turn ignition switch ON.
2. Select “DATA MONITOR” mode with CONSULT-II.
3. Start engine and let it idle for at least 13 seconds.
4. If 1st trip DTC is detected, go to EC-335, "Diagnosis Procedure".

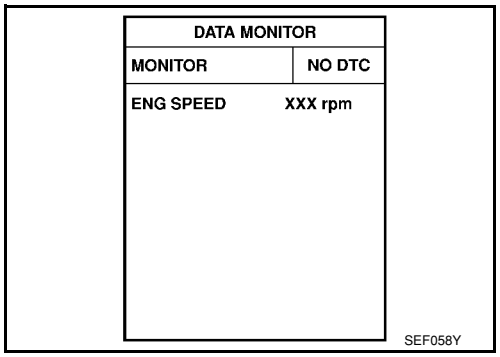

WITH GST

Follow the procedure “WITH CONSULT-II” above.

Wiring Diagram

INFOID:0000000001702840

EC-PGC/V-01

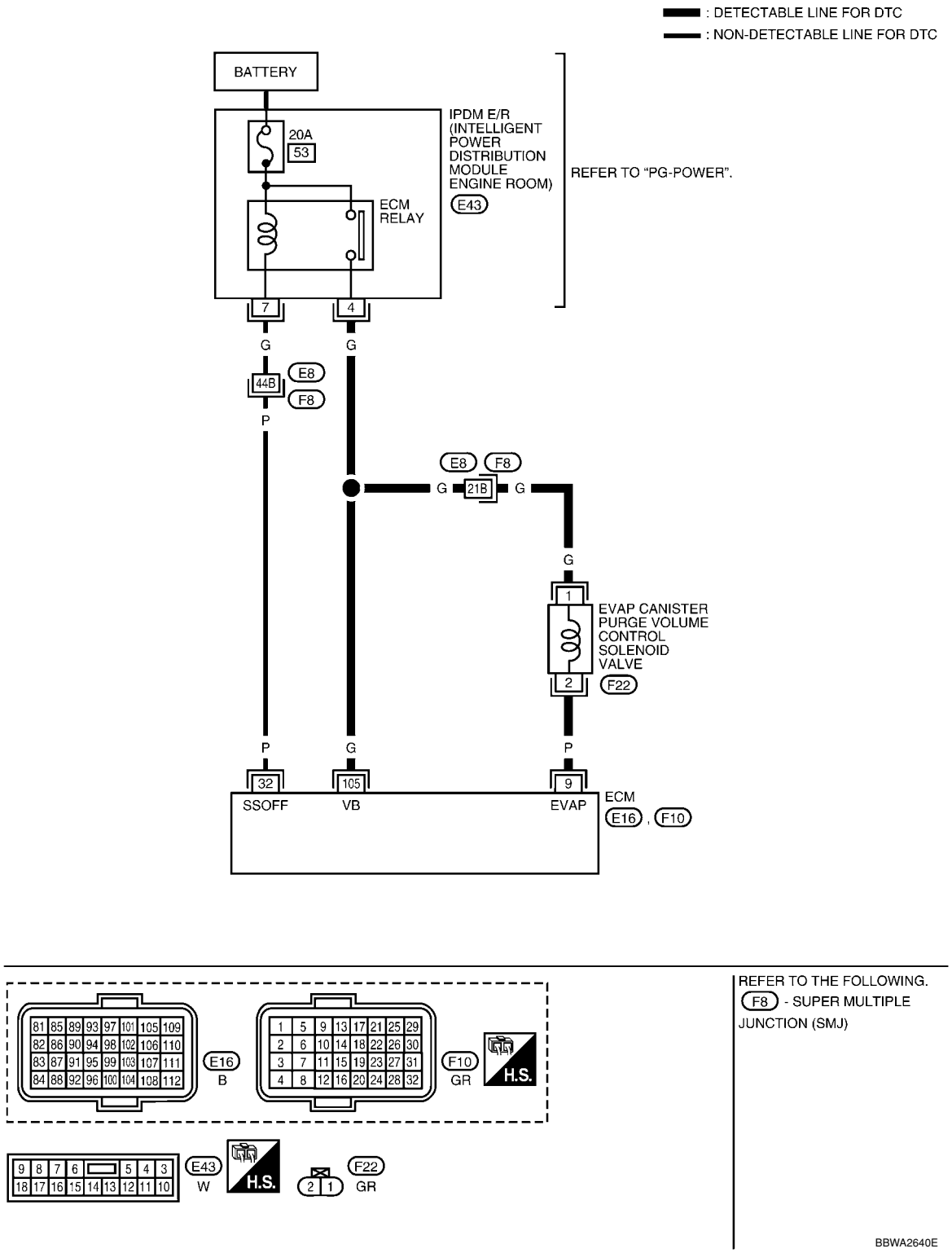

Specification data are reference values and are measured between each terminal and ground.
Pulse signal is measured by CONSULT-II.

CAUTION:

Do not use ECM ground terminals when measuring input/output voltage. Doing so may result in damage to the ECM's transistor. Use a ground other than ECM terminals, such as the ground.

TERMINAL NO.	WIRE COLOR	ITEM	CONDITION	DATA (DC Voltage)
9	P	EVAP canister purge volume control solenoid valve	**[Engine is running]** • Idle speed • Accelerator pedal: Not depressed even slightly, after engine starting.	BATTERY VOLTAGE (11 - 14V)★ 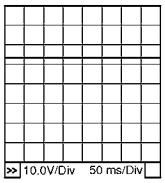 PBIB0050E
			[Engine is running] • Engine speed: About 2,000 rpm (More than 100 seconds after starting engine)	Approximately 10V★ PBIB0520E
32	P	ECM relay (Self shut-off)	**[Engine is running]** **[Ignition switch: OFF]** • For a few seconds after turning ignition switch OFF	0 - 1.0V
			[Ignition switch: OFF] • More than a few seconds after turning ignition switch OFF	BATTERY VOLTAGE (11 - 14V)
105	G	Power supply for ECM	**[Ignition switch: ON]**	BATTERY VOLTAGE (11 - 14V)

★: Average voltage for pulse signal (Actual pulse signal can be confirmed by oscilloscope.)

Diagnosis Procedure

INFOID:0000000001702841

1. CHECK EVAP CANISTER PURGE VOLUME CONTROL SOLENOID VALVE POWER SUPPLY CIRCUIT

1. Turn ignition switch OFF.
2. Disconnect EVAP canister purge volume control solenoid valve (1) harness connector.
- EVAP canister port (2)
3. Turn ignition switch ON.

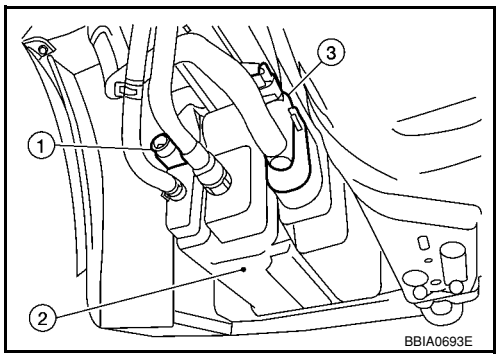

4. Check voltage between EVAP canister purge volume control solenoid valve terminal 1 and ground with CONSULT-II or tester.

Voltage: Battery voltage

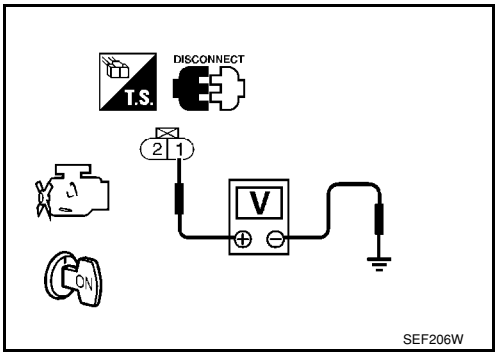

OK or NG

OK >> GO TO 3.
NG >> GO TO 2.

2. DETECT MALFUNCTIONING PART

Check the following.
- Harness connectors E8, F8
- Harness for open or short between EVAP canister purge volume control solenoid valve and IPDM E/R

>> Repair open circuit or short to ground or short to power in harness or connectors.

3. CHECK EVAP CANISTER PURGE VOLUME CONTROL SOLENOID VALVE OUTPUT SIGNAL CIRCUIT FOR OPEN AND SHORT

1. Turn ignition switch OFF.
2. Disconnect ECM harness connector.
3. Check harness continuity between ECM terminal 9 and EVAP canister purge volume control solenoid valve terminal 2. Refer to Wiring Diagram.

Continuity should exist.

4. Also check harness for short to ground and short to power.

OK or NG

OK (With CONSULT-II)>>GO TO 4.
OK (Without CONSULT-II)>>GO TO 5.
NG >> Repair open circuit or short to ground or short to power in harness or connectors.

4. CHECK EVAP CANISTER PURGE VOLUME CONTROL SOLENOID VALVE OPERATION

With CONSULT-II

1. Reconnect all harness connectors disconnected.
2. Start engine.
3. Perform “PURG VOL CONT/V” in “ACTIVE TEST” mode with CONSULT-II. Check that engine speed varies according to the valve opening.

ACTIVE TEST	
PURG VOL CONT/V	XXX %
MONITOR	
ENG SPEED	XXX rpm
A/F ALPHA-B1	XXX %

PBIB1786E

OK or NG

OK >> GO TO 6.
NG >> GO TO 5.

5. CHECK EVAP CANISTER PURGE VOLUME CONTROL SOLENOID VALVE

Refer to EC-337, "Component Inspection".

OK or NG

OK >> GO TO 6.
NG >> Replace EVAP canister purge volume control solenoid valve.

6. CHECK INTERMITTENT INCIDENT

Refer to EC-136.

>> **INSPECTION END**

Component Inspection

INFOID:0000000001702842

EVAP CANISTER PURGE VOLUME CONTROL SOLENOID VALVE

With CONSULT-II

Check air passage continuity of EVAP canister purge volume control solenoid valve under the following conditions.

Condition (PURG VOL CONT/V value)	Air passage continuity between A and B
100%	Yes
0%	No

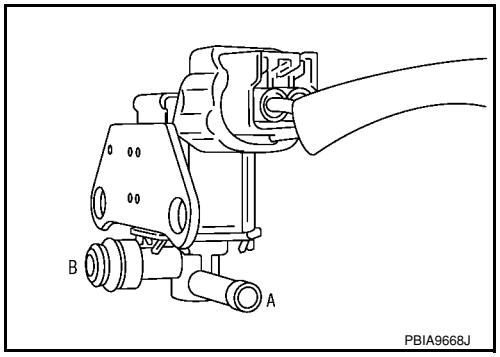

Without CONSULT-II

Check air passage continuity of EVAP canister purge volume control solenoid valve under the following conditions.

Condition	Air passage continuity between A and B
12V direct current supply between terminals 1 and 2	Yes
No supply	No

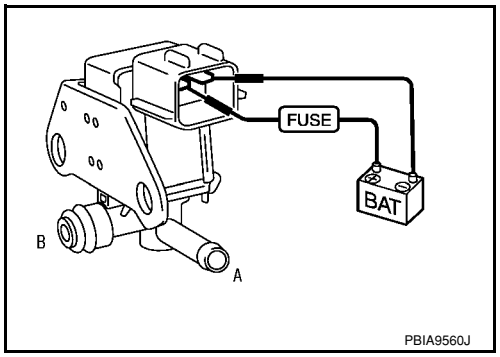

Removal and Installation

INFOID:0000000001702843

EVAP CANISTER PURGE VOLUME CONTROL SOLENOID VALVE

Refer to EM-18.

DTC P0447 EVAP CANISTER VENT CONTROL VALVE

Component Description

INFOID:0000000001702844

The EVAP canister vent control valve (3) is located on the EVAP canister (2) and is used to seal the canister vent.
This solenoid valve responds to signals from the ECM. When the ECM sends an ON signal, the coil in the solenoid valve is energized. A plunger will then move to seal the canister vent. The ability to seal the vent is necessary for the on board diagnosis of other evaporative emission control system components.
This solenoid valve is used only for diagnosis, and usually remains opened.
When the vent is closed, under normal purge conditions, the evaporative emission control system is depressurized and allows EVAP control system diagnoses.
• EVAP control system pressure sensor (1)

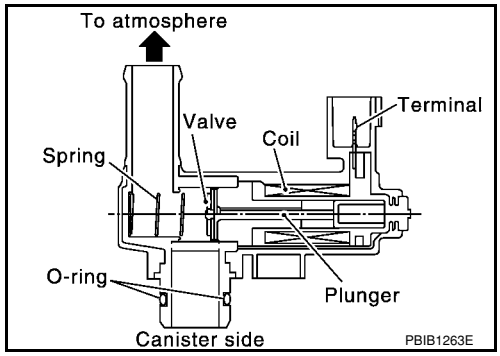

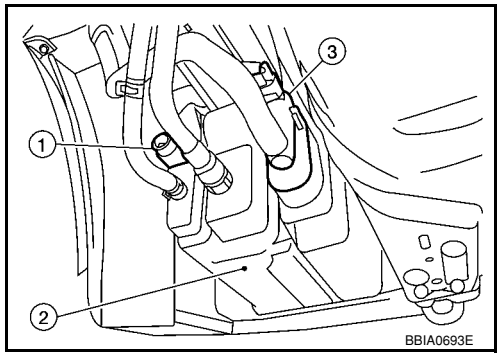

CONSULT-II Reference Value in Data Monitor Mode

INFOID:0000000001702845

Specification data are reference values.

MONITOR ITEM	CONDITION	SPECIFICATION
VENT CONT/V	• Ignition switch: ON	OFF

On Board Diagnosis Logic

INFOID:0000000001702846

DTC No.	Trouble diagnosis name	DTC detecting condition	Possible cause
P0447 0447	EVAP canister vent control valve circuit open	An improper voltage signal is sent to ECM through EVAP canister vent control valve.	• Harness or connectors (EVAP canister vent control valve circuit is open or shorted.) • EVAP canister vent control valve

DTC Confirmation Procedure

INFOID:0000000001702847

NOTE:
If DTC Confirmation Procedure has been previously conducted, always turn ignition switch OFF and wait at least 10 seconds before conducting the next test.
TESTING CONDITION:
Before performing the following procedure, confirm battery voltage is more than 11V at idle.

WITH CONSULT-II
1. Turn ignition switch ON.

2. Select “DATA MONITOR” mode with CONSULT-II.
3. Start engine and wait at least 8 seconds.
4. If 1st trip DTC is detected, go to EC-341, "Diagnosis Procedure".

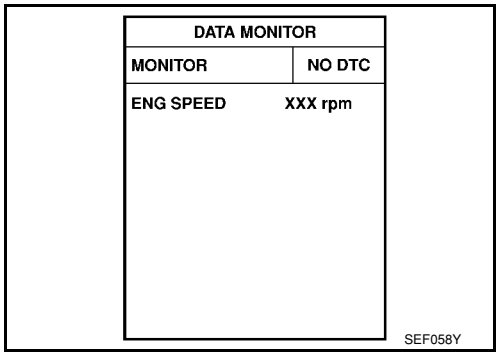

WITH GST

Follow the procedure “WITH CONSULT-II” above.

Wiring Diagram

INFOID:0000000001702848

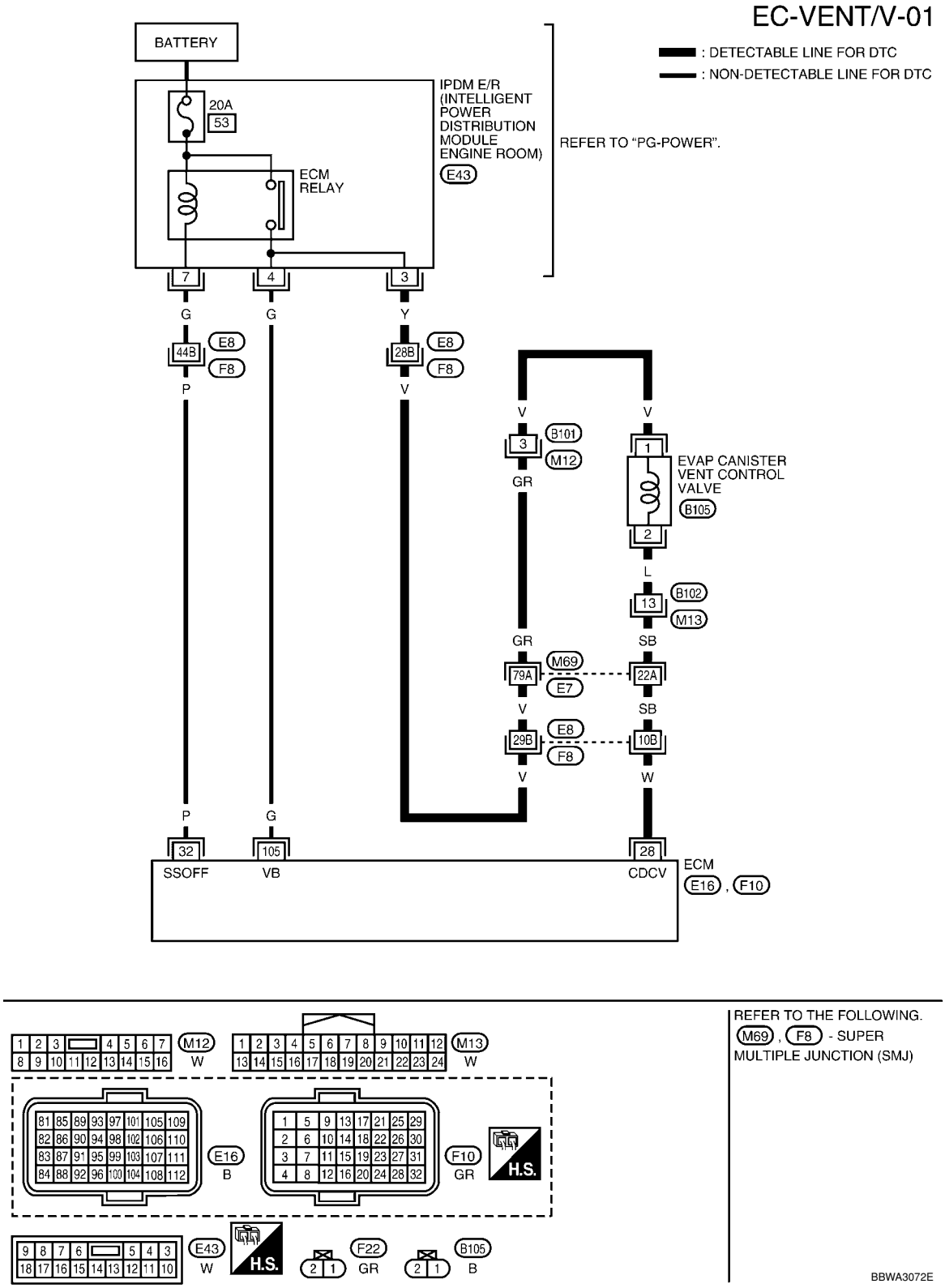

Specification data are reference values and are measured between each terminal and ground.

CAUTION:

Do not use ECM ground terminals when measuring input/output voltage. Doing so may result in damage to the ECM's transistor. Use a ground other than ECM terminals, such as the ground.

TERMINAL NO.	WIRE COLOR	ITEM	CONDITION	DATA (DC Voltage)
28	W	EVAP canister vent control valve	**[Ignition switch: ON]**	BATTERY VOLTAGE (11 - 14V)
32	P	ECM relay (Self shut-off)	**[Engine is running]** **[Ignition switch: OFF]** • For a few seconds after turning ignition switch OFF	0 - 1.0V
			[Ignition switch: OFF] • More than a few seconds after turning ignition switch OFF	BATTERY VOLTAGE (11 - 14V)
105	G	Power supply for ECM	**[Ignition switch: ON]**	BATTERY VOLTAGE (11 - 14V)

Diagnosis Procedure

INFOID:0000000001702849

1. INSPECTION START

1. Do you have CONSULT-II?

Yes or No

Yes >> GO TO 2.
No >> GO TO 3.

2. CHECK EVAP CANISTER VENT CONTROL VALVE CIRCUIT

With CONSULT-II

1. Turn ignition switch OFF and then turn ON.
2. Select “VENT CONTROL/V” in “ACTIVE TEST” mode with CONSULT-II.
3. Touch “ON/OFF” on CONSULT-II screen.
4. Check for operating sound of the valve.

Clicking noise should be heard.

ACTIVE TEST	
VENT CONTROL/V	OFF
MONITOR	
ENG SPEED	XXX rpm
A/F ALPHA-B1	XXX %

PBIB1787E

OK or NG

OK >> GO TO 8.
NG >> GO TO 3.

3. CHECK EVAP CANISTER VENT CONTROL VALVE POWER SUPPLY CIRCUIT

1. Turn ignition switch OFF.
2. Disconnect EVAP canister vent control valve (3) harness connector.
- EVAP control system pressure sensor (1)
- EVAP canister (2)
3. Turn ignition switch ON.

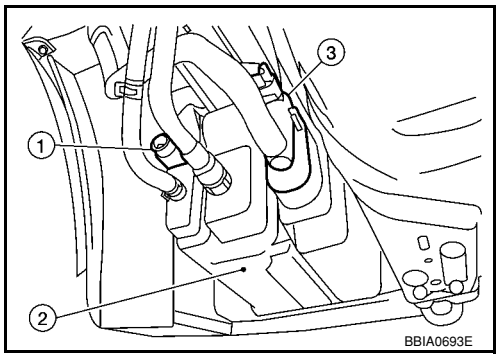

BBIA0693E

4. Check voltage between EVAP canister vent control valve terminal 1 and ground with CONSULT-II or tester.

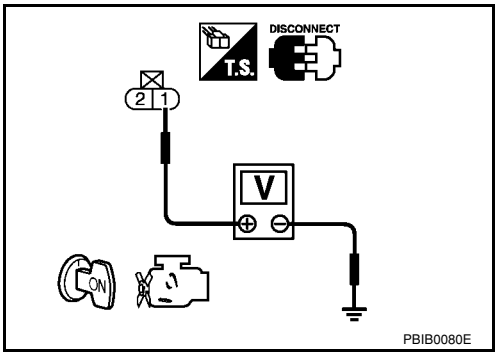

Voltage: Battery voltage

OK or NG

OK >> GO TO 5.
NG >> GO TO 4.

4. DETECT MALFUNCTIONING PART

Check the following.
- Harness connectors E8, F8
- Harness connectors E7, B69
- Harness connectors M12, B101
- Harness for open or short between EVAP canister vent control valve and IPDM E/R

>> Repair open circuit or short to ground or short to power in harness or connectors.

5. CHECK EVAP CANISTER VENT CONTROL VALVE OUTPUT SIGNAL CIRCUIT FOR OPEN AND SHORT

1. Turn ignition switch OFF.
2. Disconnect ECM harness connector.
3. Check harness continuity between ECM terminal 28 and EVAP canister vent control valve terminal 2. Refer to Wiring Diagram.

Continuity should exist.

4. Also check harness for short to ground and short to power.

OK or NG

OK >> GO TO 7.
NG >> GO TO 6.

6. DETECT MALFUNCTIONING PART

Check the following.
- Harness connectors E8, F8
- Harness connectors E7, B69
- Harness connectors M13, B102
- Harness for open or short between EVAP canister vent control valve and ECM

>> Repair open circuit or short to ground or short to power in harness or connectors.

7. CHECK RUBBER TUBE FOR CLOGGING

1. Disconnect rubber tube connected to EVAP canister vent control valve.
2. Check the rubber tube for clogging.

OK or NG

OK >> GO TO 8.
NG >> Clean the rubber tube using an air blower.

8. CHECK EVAP CANISTER VENT CONTROL VALVE

Refer to EC-343, "Component Inspection".

OK or NG

OK >> GO TO 9.
NG >> Replace EVAP canister vent control valve.

9. CHECK INTERMITTENT INCIDENT

Refer to EC-136.

>> **INSPECTION END**

Component Inspection

INFOID:0000000001702850

EVAP CANISTER VENT CONTROL VALVE

With CONSULT-II

1. Remove EVAP canister vent control valve from EVAP canister.
2. Check portion **B** of EVAP canister vent control valve for being rusted.
   If NG, replace EVAP canister vent control valve.
   If OK, go to next step.
3. Reconnect harness connectors disconnected.
4. Turn ignition switch ON.

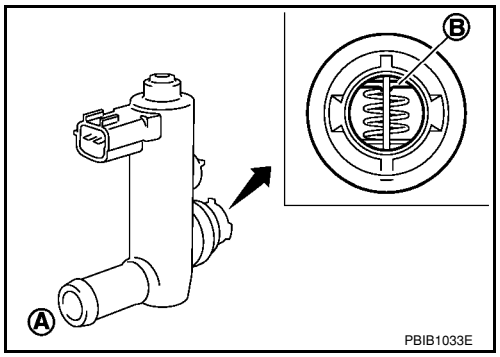

5. Perform “VENT CONTROL/V” in “ACTIVE TEST” mode.
6. Check air passage continuity and operation delay time.
   Make sure new O-ring is installed properly.

Condition VENT CONTROL/V	Air passage continuity between A and B
ON	No
OFF	Yes

Operation takes less than 1 second.
If NG, replace EVAP canister vent control valve.
If OK, go to next step.

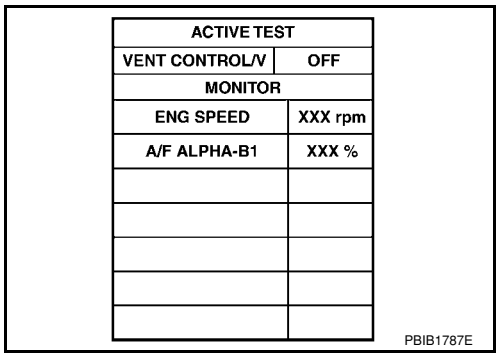

7. Clean the air passage (Portion **A**to **B**) of EVAP canister vent control valve using an air blower.
8. Perform step 6 again.

Without CONSULT-II

1. Remove EVAP canister vent control valve from EVAP canister.
2. Check portion **B**of EVAP canister vent control valve for being rusted.

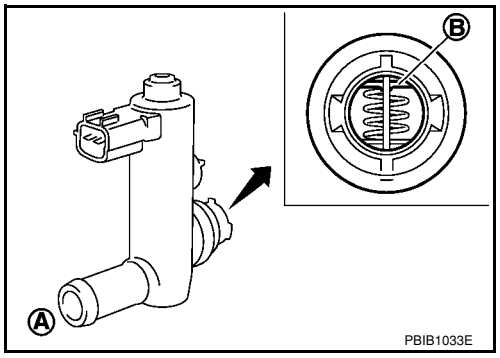

3. Check air passage continuity and operation delay time under the following conditions.
   Make sure new O-ring is installed properly.

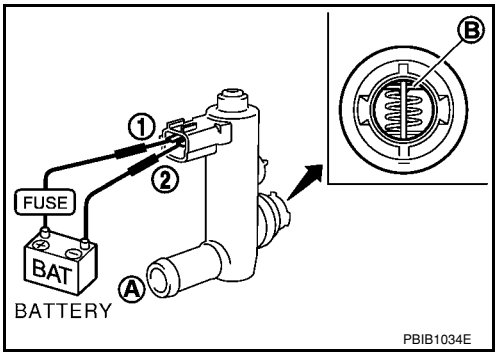

Condition	Air passage continuity between A and B
12V direct current supply between terminals 1 and 2	No
OFF	Yes

   Operation takes less than 1 second.
   If NG, replace EVAP canister vent control valve.
   If OK, go to next step.
4. Clean the air passage (Portion **A** to **B**) of EVAP canister vent control valve using an air blower.
5. Perform step 3 again.

DTC P0448 EVAP CANISTER VENT CONTROL VALVE

Component Description

INFOID:0000000001702851

The EVAP canister vent control valve (3) is located on the EVAP canister (2) and is used to seal the canister vent.
This solenoid valve responds to signals from the ECM. When the ECM sends an ON signal, the coil in the solenoid valve is energized. A plunger will then move to seal the canister vent. The ability to seal the vent is necessary for the on board diagnosis of other evaporative emission control system components.
This solenoid valve is used only for diagnosis, and usually remains opened.
When the vent is closed, under normal purge conditions, the evaporative emission control system is depressurized and allows EVAP control system diagnoses.
- EVAP control system pressure sensor (1)

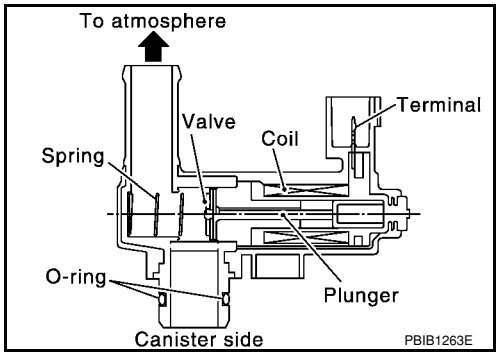

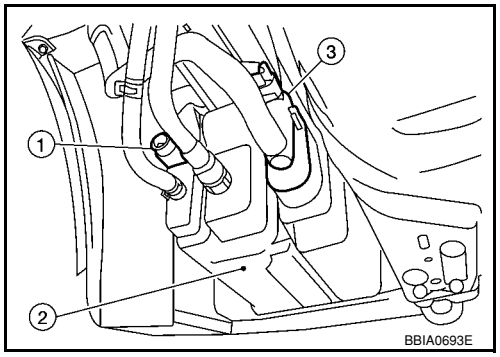

CONSULT-II Reference Value in Data Monitor Mode

INFOID:0000000001702852

Specification data are reference values.

MONITOR ITEM	CONDITION	SPECIFICATION
VENT CONT/V	• Ignition switch: ON	OFF

On Board Diagnosis Logic

INFOID:0000000001702853

DTC No.	Trouble diagnosis name	DTC detecting condition	Possible cause
P0448 0448	EVAP canister vent control valve close	EVAP canister vent control valve remains closed under specified driving conditions.	• EVAP canister vent control valve • EVAP control system pressure sensor and the circuit • Blocked rubber tube to EVAP canister vent control valve • EVAP canister is saturated with water

DTC Confirmation Procedure

INFOID:0000000001702854

CAUTION:
Always drive vehicle at a safe speed.
NOTE:
If DTC Confirmation Procedure has been previously conducted, always turn ignition switch OFF and wait at least 10 seconds before conducting the next test.

WITH CONSULT-II

1. Turn ignition switch ON and wait at least 5 seconds.
2. Turn ignition switch OFF and wait at least 10 seconds.

3. Turn ignition switch ON and select “DATA MONITOR” mode with CONSULT-II.
4. Start engine and let it idle for at least 1 minute.
5. Repeat next procedures three times.

a. Increase the engine speed up to 3,000 to 3,500 rpm and keep it for 2 minutes and 50 seconds to 3 minutes.
Never exceed 3 minutes.

b. Fully released accelerator pedal and keep engine idle for about 5 seconds.

6. If 1st trip DTC is detected, go to EC-348, "Diagnosis Procedure".
If 1st trip DTC is not detected, go to the next step.

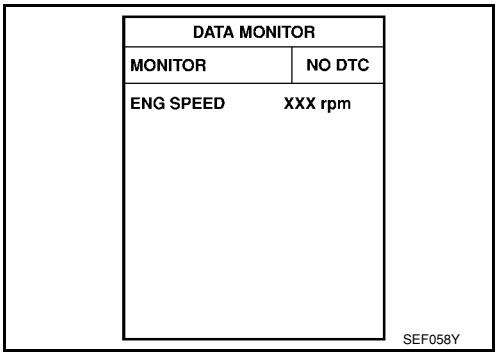

7. Repeat next procedure 20 times.

a. Quickly increase the engine speed up to 4,000 to 4,500 rpm or more and keep it for 25 to 30 seconds.

b. Fully released accelerator pedal and keep engine idle for at least 35 seconds.

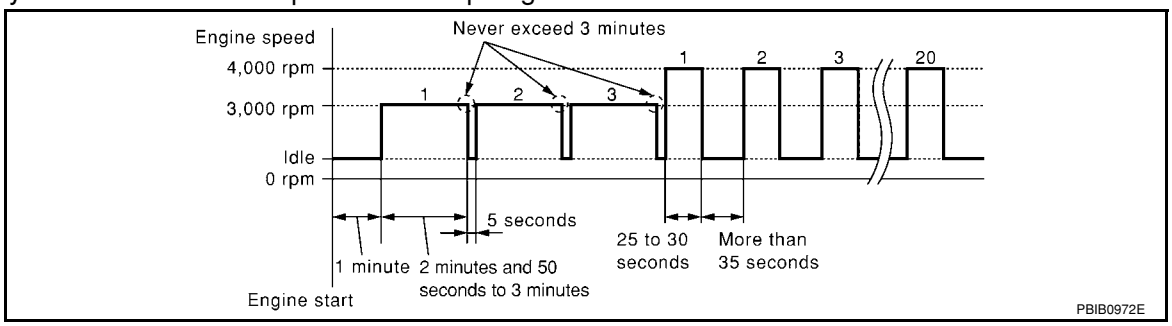

8. If 1st trip DTC is detected, go to EC-348, "Diagnosis Procedure".

WITH GST

Follow the procedure “WITH CONSULT-II” above.

Wiring Diagram

INFOID:0000000001702855

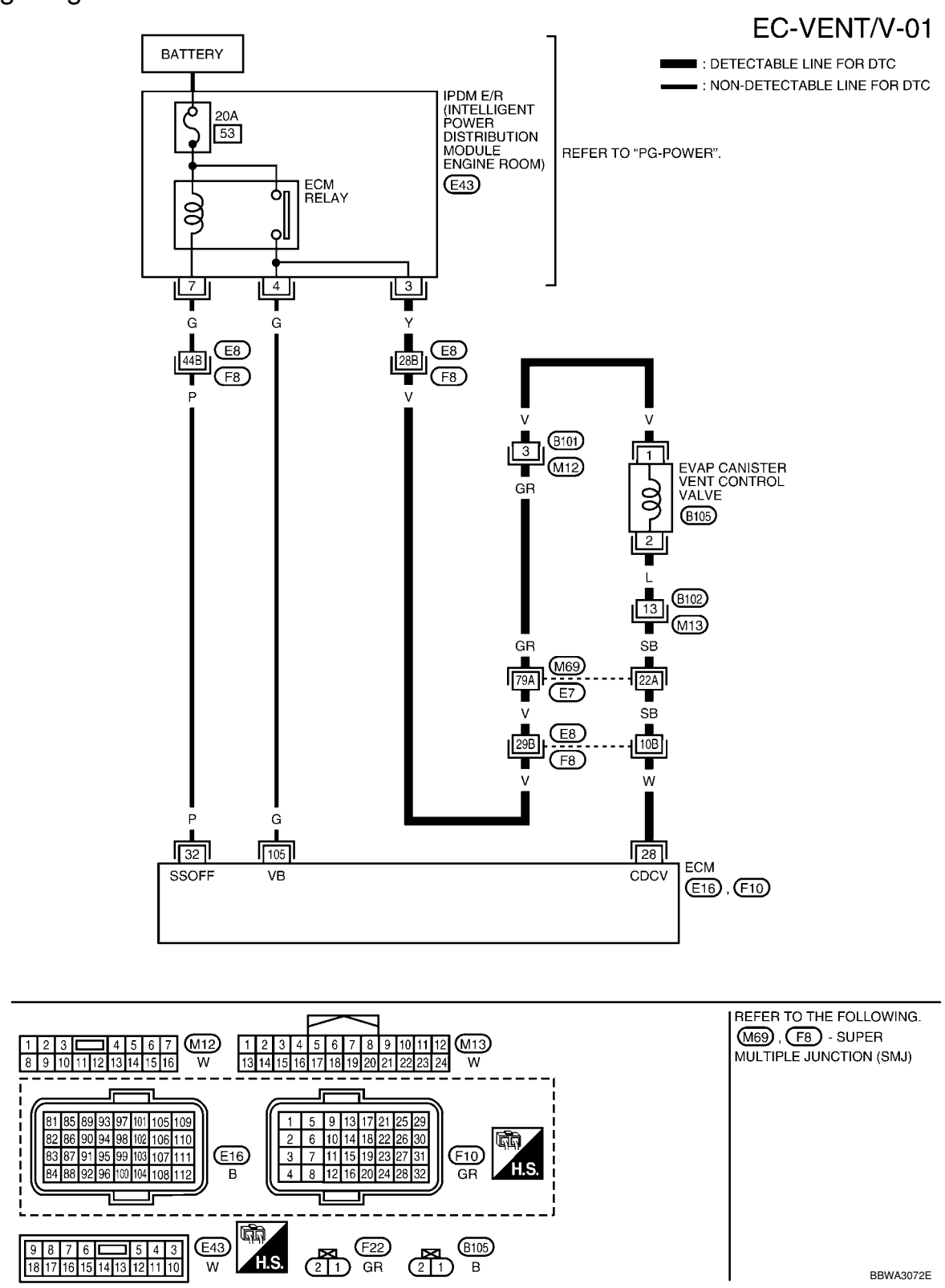

Specification data are reference values and are measured between each terminal and ground.

CAUTION:

Do not use ECM ground terminals when measuring input/output voltage. Doing so may result in damage to the ECM's transistor. Use a ground other than ECM terminals, such as the ground.

TERMINAL NO.	WIRE COLOR	ITEM	CONDITION	DATA (DC Voltage)
28	W	EVAP canister vent control valve	**[Ignition switch: ON]**	BATTERY VOLTAGE (11 - 14V)
32	P	ECM relay (Self shut-off)	**[Engine is running]** **[Ignition switch: OFF]** • For a few seconds after turning ignition switch OFF	0 - 1.0V
			[Ignition switch: OFF] • More than a few seconds after turning ignition switch OFF	BATTERY VOLTAGE (11 - 14V)
105	G	Power supply for ECM	**[Ignition switch: ON]**	BATTERY VOLTAGE (11 - 14V)

Diagnosis Procedure

INFOID:0000000001702856

1. CHECK RUBBER TUBE

1. Turn ignition switch OFF.
2. Disconnect rubber tube connected to EVAP canister vent control valve (3).
3. Check the rubber tube for clogging.

- EVAP control system pressure sensor (1)
- EVAP canister (2)

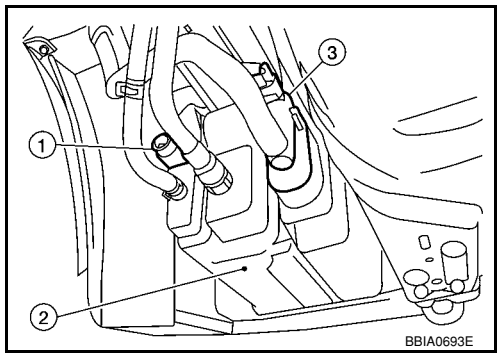

OK or NG

OK >> GO TO 2.
NG >> Clean rubber tube using an air blower.

2. CHECK EVAP CANISTER VENT CONTROL VALVE

Refer to EC-349, "Component Inspection".

OK or NG

OK >> GO TO 3.
NG >> Replace EVAP canister vent control valve.

3. CHECK IF EVAP CANISTER SATURATED WITH WATER

1. Remove EVAP canister with EVAP canister vent control valve attached.
2. Does water drain from the EVAP canister.

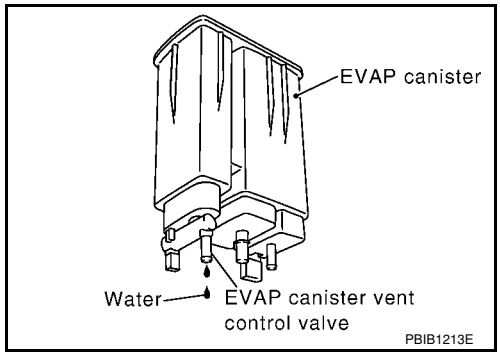

Yes or No

Yes >> GO TO 4.
No >> GO TO 6.

4. CHECK EVAP CANISTER

Weigh the EVAP canister with the EVAP canister vent control valve and EVAP control system pressure sensor attached.

The weight should be less than 1.9 kg (4.2 lb).

OK or NG

OK >> GO TO 6.
NG >> GO TO 5.

5. DETECT MALFUNCTIONING PART

Check the following.
- EVAP canister for damage
- EVAP hose between EVAP canister and vehicle frame for clogging or poor connection

>> Repair hose or replace EVAP canister.

6. CHECK EVAP CONTROL SYSTEM PRESSURE SENSOR CONNECTOR

1. Disconnect EVAP control system pressure sensor (1) harness connector.
- EVAP canister (2)
- EVAP canister vent control valve (3)
2. Check connectors for water.

Water should not exist.

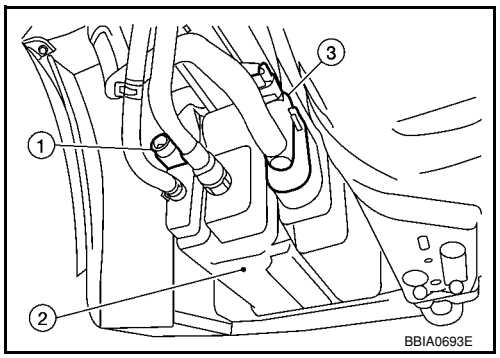

OK or NG

OK >> GO TO 7.
NG >> Replace EVAP control system pressure sensor.

7. CHECK EVAP CONTROL SYSTEM PRESSURE SENSOR

Refer to EC-369, "Component Inspection".

OK or NG

OK >> GO TO 8.
NG >> Replace EVAP control system pressure sensor.

8. CHECK INTERMITTENT INCIDENT

Refer to EC-136.

>> **INSPECTION END**

Component Inspection

INFOID:0000000001702857

EVAP CANISTER VENT CONTROL VALVE

With CONSULT-II

1. Remove EVAP canister vent control valve from EVAP canister.
2. Check portion **B** of EVAP canister vent control valve for being rusted.
   If NG, replace EVAP canister vent control valve.
   If OK, go to next step.
3. Reconnect harness connectors disconnected.
4. Turn ignition switch ON.

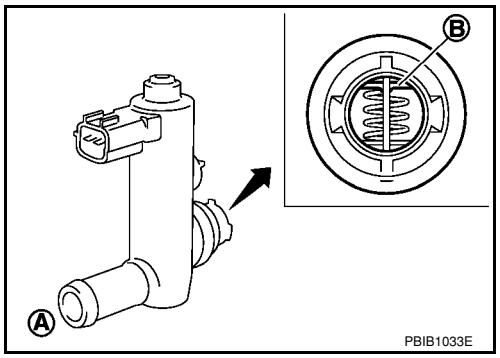

5. Perform “VENT CONTROL/V” in “ACTIVE TEST” mode.
6. Check air passage continuity and operation delay time.

ACTIVE TEST	
VENT CONTROL/V	OFF
MONITOR	
ENG SPEED	XXX rpm
A/F ALPHA-B1	XXX %

PBIB1787E

Condition VENT CONTROL/V	Air passage continuity between A and B
ON	No
OFF	Yes

Operation takes less than 1 second.
Make sure new O-ring is installed properly.
If NG, replace EVAP canister vent control valve.
If OK, go to next step.

7. Clean the air passage (Portion **A**to **B**) of EVAP canister vent control valve using an air blower.
8. Perform step 5 again.

Without CONSULT-II

1. Remove EVAP canister vent control valve from EVAP canister.
2. Check portion **B** of EVAP canister vent control valve for being rusted.

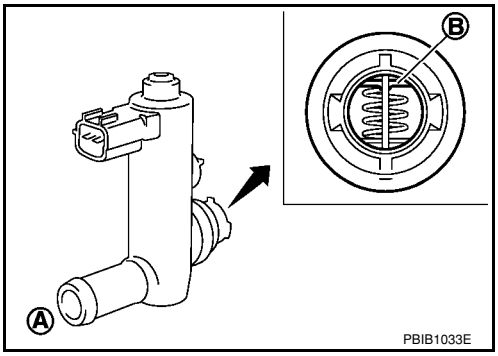

PBIB1033E

3. Check air passage continuity and operation delay time under the following conditions.

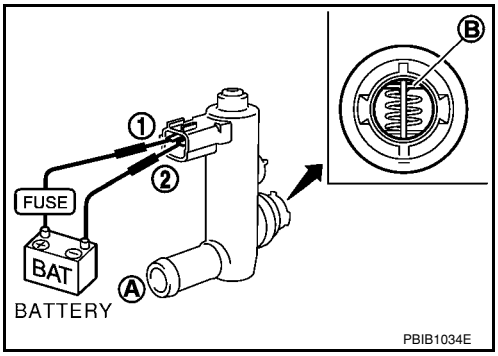

PBIB1034E

Condition	Air passage continuity between A and B
12V direct current supply between terminals 1 and 2	No
OFF	Yes

Operation takes less than 1 second.
Make sure new O-ring is installed properly.
If NG, replace EVAP canister vent control valve.
If OK, go to next step.

4. Clean the air passage (Portion **A**to **B**) of EVAP canister vent control valve using an air blower.
5. Perform step 3 again.

DTC P0451 EVAP CONTROL SYSTEM PRESSURE SENSOR

Component Description

INFOID:0000000001702858

The EVAP control system pressure sensor (1) detects pressure in the purge line. The sensor output voltage to the ECM increases as pressure increases.
- EVAP canister (2)
- EVAP canister vent control valve (3)

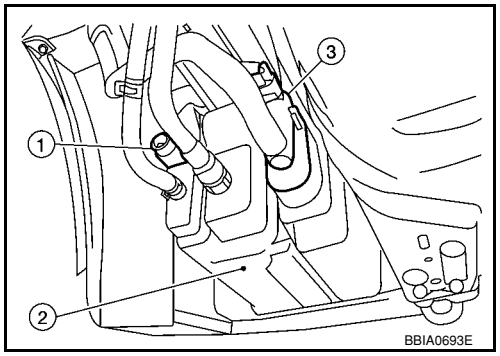

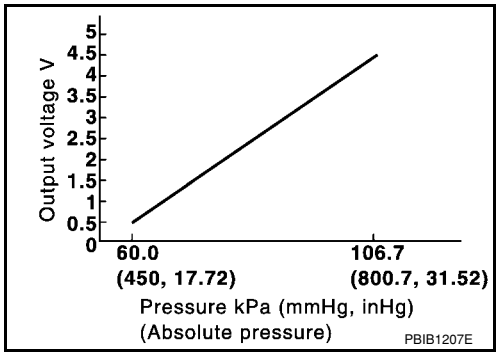

CONSULT-II Reference Value in Data Monitor Mode

INFOID:0000000001702859

Specification data are reference values.

MONITOR ITEM	CONDITION	SPECIFICATION
EVAP SYS PRES	• Ignition switch: ON	Approx. 1.8 - 4.8V

On Board Diagnosis Logic

INFOID:0000000001702860

DTC No.	Trouble diagnosis name	DTC detecting condition	Possible cause
P0451 0451	EVAP control system pressure sensor performance	ECM detects a sloshing signal from the EVAP control system pressure sensor	• Harness or connectors [Crankshaft position sensor (POS) circuit is shorted.] (Accelerator pedal position sensor circuit is shorted.) (Refrigerant pressure sensor circuit is shorted.) • EVAP control system pressure sensor • Crankshaft position sensor (POS) • Accelerator pedal position sensor • Refrigerant pressure sensor

DTC Confirmation Procedure

INFOID:0000000001702861

NOTE:
If DTC Confirmation Procedure has been previously conducted, always turn ignition switch OFF and wait at least 10 seconds before conducting the next test.

WITH CONSULT-II

1. Turn ignition switch OFF and wait at least 10 seconds.

2. Turn ignition switch ON and select “DATA MONITOR” mode with CONSULT-II.
3. Start engine and wait at least 40 seconds.
   NOTE:
   Do not depress accelerator pedal even slightly.
   If 1st trip DTC is detected, go to EC-352, "Diagnosis Procedure".

DATA MONITOR	
MONITOR	NO DTC
ENG SPEED	XXX rpm
COOLAN TEMP/S	XXX °C
FUEL T/TMP SE	XXX °C

SEF194Y

WITH GST

Follow the procedure “WITH CONSULT-II” above.

Diagnosis Procedure

INFOID:0000000001702862

1. CHECK GROUND CONNECTIONS

1. Turn ignition switch OFF.
2. Loosen and retighten ground screws on the body.
   Refer to EC-142, "Ground Inspection".

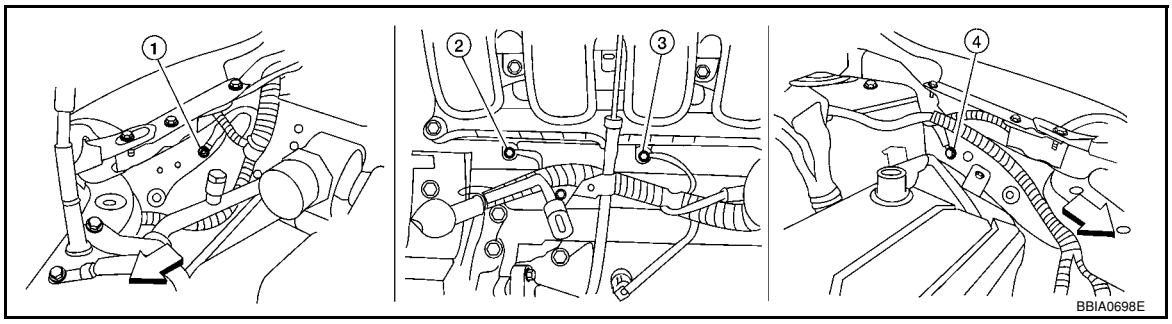

⇦: Vehicle front

1. Body ground E24
2. Engine ground F9
3. engine ground F16
4. Body ground E15

OK or NG

OK >> GO TO 2.
NG >> Repair or replace ground connections.

2. CHECK EVPA CONTROL SYSTEM PRESSURE SENSOR CONNECTOR FOR WATER

1. Disconnect EVAP control system pressure sensor (1) harness connector.
- EVAP canister (2)
- EVAP canister vent control valve (3)
2. Check sensor harness connector for water.

Water should not exist.

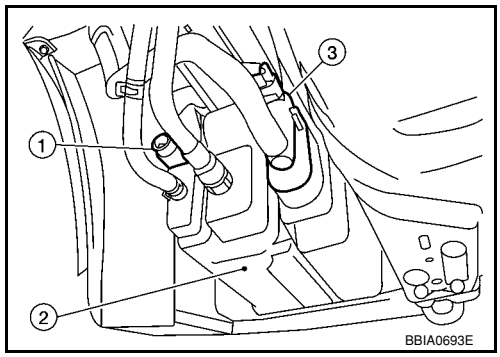

OK or NG

OK >> GO TO 3.
NG >> Repair or replace harness connector.

3. CHECK COMPONENTS POWER SUPPLY

Check harness for short to power and short to ground, between the following terminals.

ECM terminal	Sensor terminal	Reference Wiring Diagram
74	Refrigerant pressure sensor terminal 3	EC-542, "Wiring Diagram"
75	Crankshaft position sensor (POS) terminal 1	EC-297, "Wiring Diagram"
76	EVAP control system pressure sensor terminal 3	EC-357, "Wiring Diagram"
102	APP sensor terminal 5	EC-482, "Wiring Diagram"

OK or NG

OK >> GO TO 4.
NG >> Repair short to ground or short to power in harness or connectors.

4. CHECK COMPONENTS

Check the following.
- Refrigerant pressure sensor (Refer to MTC-22.)
- Crankshaft position sensor (POS) (Refer to EC-301, "Component Inspection".)

OK or NG

OK >> GO TO 5.
NG >> Replace malfunctioning components.

5. CHECK APP SENSOR

Refer to EC-485, "Component Inspection".

OK or NG

OK >> GO TO 7.
NG >> GO TO 6.

6. REPLACE ACCELERATOR PEDAL ASSEMBLY

1. Replace accelerator pedal assembly.
2. Perform EC-76, "Accelerator Pedal Released Position Learning".
3. Perform EC-76, "Throttle Valve Closed Position Learning".
4. Perform EC-76, "Idle Air Volume Learning".

>> **INSPECTION END**

7. CHECK EVAP CONTROL SYSTEM PRESSURE SENSOR

Refer to EC-353, "Component Inspection".

OK or NG

OK >> GO TO 8.
NG >> Replace EVAP control system pressure sensor.

8. CHECK INTERMITTENT INCIDENT

Refer to EC-136.
For wiring diagram, refer to EC-357, "Wiring Diagram".

>> **INSPECTION END**

Component Inspection

INFOID:0000000001702863

EVAP CONTROL SYSTEM PRESSURE SENSOR

1. Remove EVAP control system pressure sensor with its harness connector connected from EVAP canister. **Always replace O-ring with a new one.**
2. Install a vacuum pump to EVAP control system pressure sensor.

3. Turn ignition switch ON and check output voltage between ECM terminal 42 (EVAP control system pressure sensor signal) and ground under the following conditions.

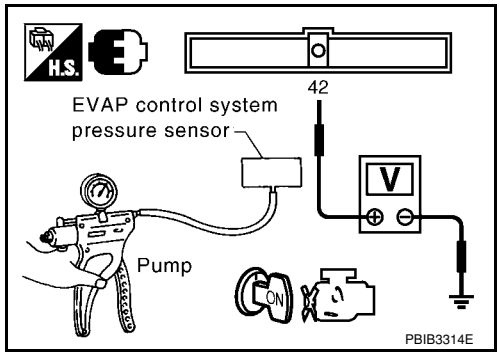

Applied vacuum kPa (mmHg, inHg)	Voltage V
Not applied	1.8 - 4.8
-26.7 (-200, -7.87)	2.1 to 2.5V lower than above value

CAUTION:
- **Always calibrate the vacuum pump gauge when using it.**
- **Do not apply below -93.3 kPa (-700 mmHg, -27.56 inHg) or pressure over 101.3 kPa (760 mmHg, 29.92 inHg).**

4. If NG, replace EVAP control system pressure sensor.

DTC P0452 EVAP CONTROL SYSTEM PRESSURE SENSOR

Component Description

INFOID:0000000001702864

The EVAP control system pressure sensor (1) detects pressure in the purge line. The sensor output voltage to the ECM increases as pressure increases.
- EVAP canister (2)
- EVAP canister vent control valve (3)

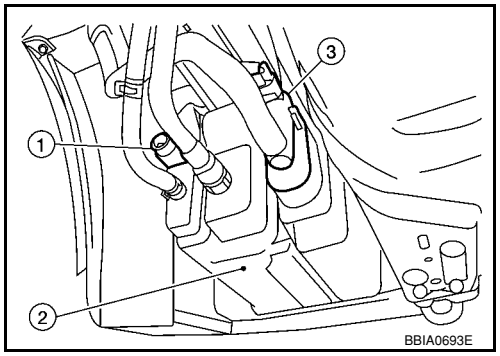

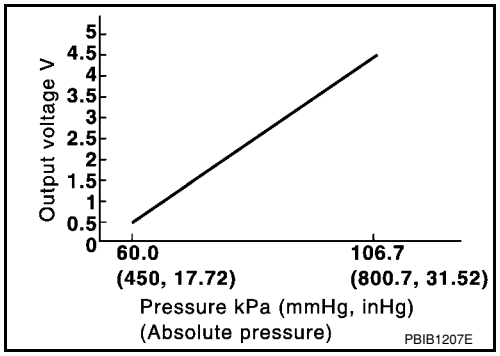

CONSULT-II Reference Value in Data Monitor Mode

INFOID:0000000001702865

Specification data are reference values.

MONITOR ITEM	CONDITION	SPECIFICATION
EVAP SYS PRES	• Ignition switch: ON	Approx. 1.8 - 4.8V

On Board Diagnosis Logic

INFOID:0000000001702866

DTC No.	Trouble diagnosis name	DTC detecting condition	Possible cause
P0452 0452	EVAP control system pressure sensor low input	An excessively low voltage from the sensor is sent to ECM.	• Harness or connectors (EVAP control system pressure sensor circuit is open or shorted.) [Crankshaft position sensor (POS) circuit is shorted.) (Accelerator pedal position sensor circuit is shorted.) (Refrigerant pressure sensor circuit is shorted.) • EVAP control system pressure sensor • Crankshaft position sensor (POS) • Accelerator pedal position sensor • Refrigerant pressure sensor

DTC Confirmation Procedure

INFOID:0000000001702867

NOTE:
If DTC Confirmation Procedure has been previously conducted, always turn ignition switch OFF and wait at least 10 seconds before conducting the next test.
TESTING CONDITION:
Always perform test at a temperature of 5°C (41°F) or more.

WITH CONSULT-II

1. Start engine and warm it up to normal operating temperature.
2. Turn ignition switch OFF and wait at least 10 seconds.
3. Turn ignition switch ON.
4. Select “DATA MONITOR” mode with CONSULT-II.
5. Make sure that “FUEL T/TMP SE” is more than 0°C (32°F).
6. Start engine and wait at least 20 seconds.
   If 1st trip DTC is detected, go to EC-358, "Diagnosis Procedure".

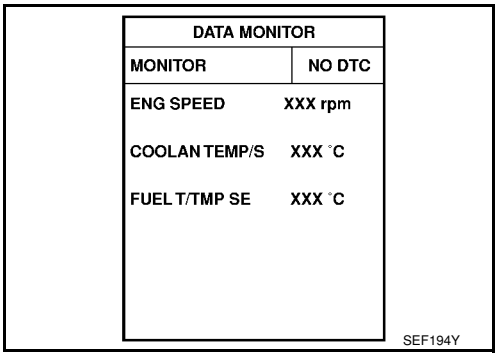

WITH GST

1. Start engine and warm it up to normal operating temperature.
2. Check that voltage between ECM terminal 43 (Fuel tank temperature sensor signal) and ground is less than 4.2V.
3. Turn ignition switch OFF and wait at least 10 seconds.
4. Start engine and wait at least 20 seconds.
5. Select Service $07 with GST.
   If 1st trip DTC is detected, go to EC-358, "Diagnosis Procedure".

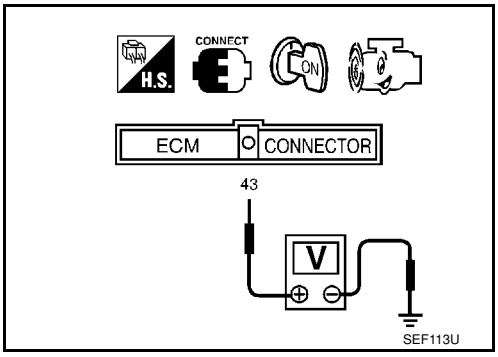

Wiring Diagram

INFOID:0000000001702868

EC-PRE/SE-01

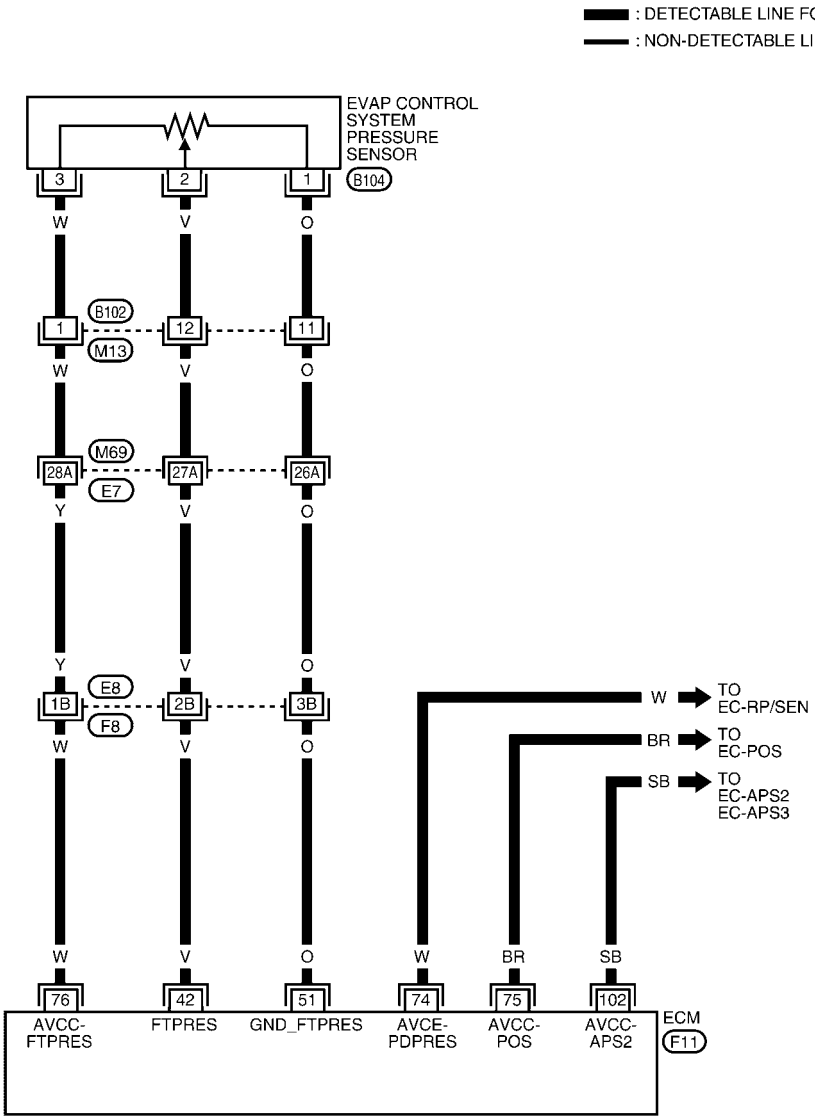

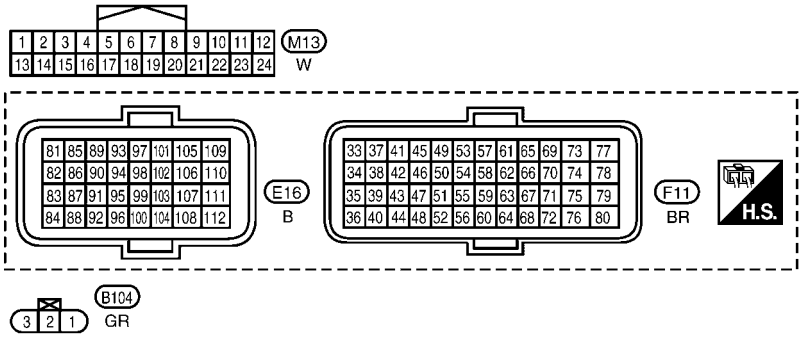

REFER TO THE FOLLOWING.
M69, F8 - SUPER MULTIPLE JUNCTION (SMJ)

BBWA3073E

Specification data are reference values and are measured between each terminal and ground.

CAUTION:

Do not use ECM ground terminals when measuring input/output voltage. Doing so may result in damage to the ECM's transistor. Use a ground other than ECM terminals, such as the ground.

TERMINAL NO.	WIRE COLOR	ITEM	CONDITION	DATA (DC Voltage)
42	V	EVAP control system pressure sensor	**[Ignition switch: ON]**	Approximately 1.8 - 4.8V
51	O	Sensor ground (EVAP control system pressure sensor)	**[Engine is running]** • **Warm-up condition** • Idle speed	Approximately 0V
74	W	Sensor power supply (Refrigerant pressure sensor)	**[Ignition switch: ON]**	Approximately 5V
75	BR	Sensor power supply [Crankshaft position sensor (POS)]	**[Ignition switch: ON]**	Approximately 5V
76	W	EVAP control system pressure sensor power supply	**[Ignition switch: ON]**	Approximately 5V
102	SB	Sensor power supply (Accelerator pedal position sensor 2)	**[Ignition switch: ON]**	Approximately 5V

Diagnosis Procedure

INFOID:0000000001702869

1. CHECK GROUND CONNECTIONS

1. Turn ignition switch OFF.
2. Loosen and retighten ground screws on the body.
   Refer to EC-142, "Ground Inspection".

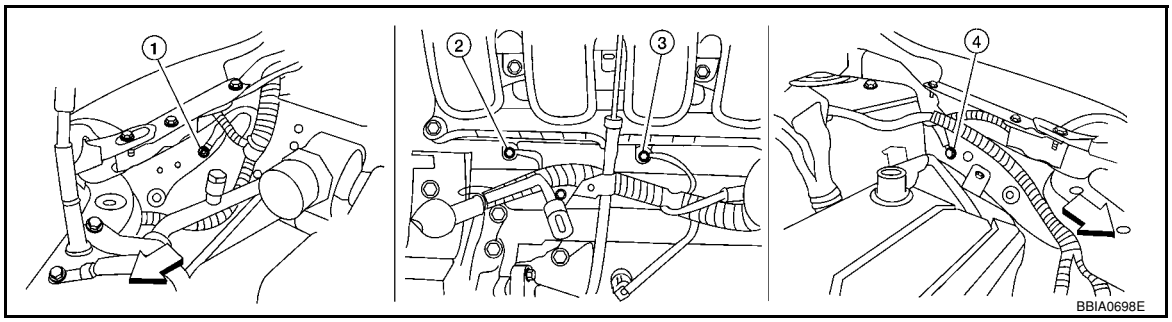

⇦: Vehicle front

1. Body ground E24
2. Engine ground F9
3. Engine ground F16
4. Body ground E15

OK or NG

OK >> GO TO 2.
NG >> Repair or replace ground connections.

2. CHECK CONNECTOR

1. Disconnect EVAP control system pressure sensor (1) harness connector.
- EVAP canister (2)
- EVAP canister vent control valve (3)
2. Check sensor harness connector for water.

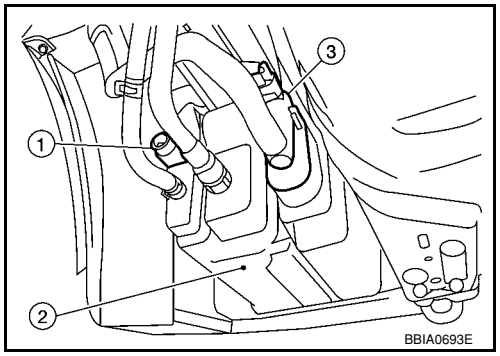

Water should not exist.

OK or NG

OK >> GO TO 3.
NG >> Repair or replace harness connector.

3. CHECK EVAP CONTROL SYSTEM PRESSURE SENSOR POWER SUPPLY CIRCUIT-I

1. Turn ignition switch ON.
2. Check voltage between EVAP control system pressure sensor terminal 3 and ground with CONSULT-II or tester.

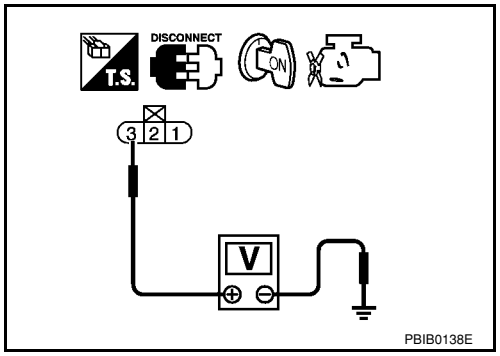

Voltage: Approximately 5V

OK or NG

OK >> GO TO 5.
NG >> GO TO 4.

4. DETECT MALFUNCTIONING PART

Check the following.
- Harness connectors E8, F8
- Harness connectors M69, E7
- Harness connectors B102, M13
- Harness for open or short between EVAP control system pressure sensor and ECM

>> Repair open circuit or short to ground or short to power in harness or connectors.

5. CHECK EVAP CONTROL SYSTEM PRESSURE SENSOR POWER SUPPLY CIRCUIT-II

1. Turn ignition switch OFF.
2. Disconnect ECM harness connector.
3. Check harness continuity between EVAP control system pressure sensor terminal 3 and ECM terminal 76.

Continuity should exist.

OK or NG

OK >> GO TO 7.
NG >> GO TO 6.

6. DETECT MALFUNCTIONING PART

Check the following.
- Harness connectors E8, F8
- Harness connectors M69, E7
- Harness connectors B102, M13
- Harness for open or short between EVAP control system pressure sensor and ECM

>> Repair open circuit or short to ground or short to power in harness or connectors.

7. CHECK COMPONENTS POWER SUPPLY

Check harness for short to power and short to ground, between the following terminals.

ECM terminal	Sensor terminal	Reference Wiring Diagram
74	Refrigerant pressure sensor terminal 3	EC-542, "Wiring Diagram"
75	Crankshaft position sensor (POS) terminal 1	EC-297, "Wiring Diagram"
76	EVAP control system pressure sensor terminal 3	EC-357, "Wiring Diagram"
102	APP sensor terminal 5	EC-482, "Wiring Diagram"

OK or NG

OK >> GO TO 8.
NG >> Repair short to ground or short to power in harness or connectors.

8. CHECK COMPONENTS

Check the following.
- Refrigerant pressure sensor (Refer to MTC-22.)
- Crankshaft position sensor (POS) (Refer to EC-301, "Component Inspection".)

OK or NG

OK >> GO TO 9.
NG >> Replace malfunctioning components.

9. CHECK APP SENSOR

Refer to EC-485, "Component Inspection".

OK or NG

OK >> GO TO 11.
NG >> GO TO 10.

10. REPLACE ACCELERATOR PEDAL ASSEMBLY

1. Replace accelerator pedal assembly.
2. Perform EC-76, "Accelerator Pedal Released Position Learning".
3. Perform EC-76, "Throttle Valve Closed Position Learning".
4. Perform EC-76, "Idle Air Volume Learning".

>> **INSPECTION END**

11. CHECK EVAP CONTROL SYSTEM PRESSURE SENSOR GROUND CIRCUIT FOR OPEN AND SHORT

1. Turn ignition switch OFF.
2. Disconnect ECM harness connector.
3. Check harness continuity between EVAP control system pressure sensor terminal 1 and ECM terminal 51. Refer to Wiring Diagram.

Continuity should exist.

4. Also check harness for short to ground and short to power.

OK or NG

OK >> GO TO 13.
NG >> GO TO 12.

12. DETECT MALFUNCTIONING PART

Check the following.
- Harness connectors E8, F8
- Harness connectors M69, E7
- Harness connectors B102, M13
- Harness for open or short between EVAP control system pressure sensor and ECM

>> Repair open circuit or short to ground or short to power in harness or connectors.

13. CHECK EVAP CONTROL SYSTEM PRESSURE SENSOR INPUT SIGNAL CIRCUIT FOR OPEN AND SHORT

1. Check harness continuity between ECM terminal 42 and EVAP control system pressure sensor terminal 2. Refer to Wiring Diagram.

   Continuity should exist.

2. Also check harness for short to ground and short to power.

OK or NG

OK >> GO TO 15.
NG >> GO TO 14.

14. DETECT MALFUNCTIONING PART

Check the following.
- Harness connectors E8, F8
- Harness connectors M69, E7
- Harness connectors B102, M13
- Harness for open or short between ECM and EVAP control system pressure sensor

>> Repair open circuit or short to ground or short to power in harness or connectors.

15. CHECK EVAP CONTROL SYSTEM PRESSURE SENSOR

Refer to EC-361, "Component Inspection".

OK or NG

OK >> GO TO 16.
NG >> Replace EVAP control system pressure sensor.

16. CHECK INTERMITTENT INCIDENT

Refer to EC-136.

>> **INSPECTION END**

Component Inspection

INFOID:0000000001702870

EVAP CONTROL SYSTEM PRESSURE SENSOR

1. Remove EVAP control system pressure sensor with its harness connector connected from EVAP canister. **Always replace O-ring with a new one.**
2. Install a vacuum pump to EVAP control system pressure sensor.
3. Turn ignition switch ON and check output voltage between ECM terminal 42 (EVAP control system pressure sensor signal) and ground under the following conditions.

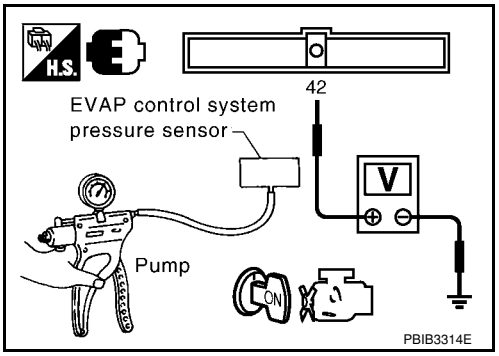

Applied vacuum kPa (mmHg, inHg)	Voltage V
Not applied	1.8 - 4.8
-26.7 (-200, -7.87)	2.1 to 2.5V lower than above value

CAUTION:
- **Always calibrate the vacuum pump gauge when using it.**
- **Do not apply below -93.3 kPa (-700 mmHg, -27.56 inHg) or pressure over 101.3 kPa (760 mmHg, 29.92 inHg).**

4. If NG, replace EVAP control system pressure sensor.

DTC P0453 EVAP CONTROL SYSTEM PRESSURE SENSOR

Component Description

INFOID:0000000001702871

The EVAP control system pressure sensor (1) detects pressure in the purge line. The sensor output voltage to the ECM increases as pressure increases.
- EVAP canister (2)
- EVAP canister vent control valve (3)

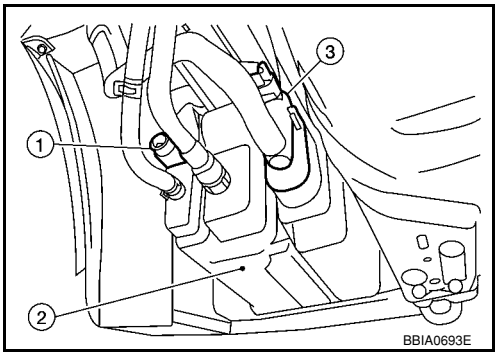

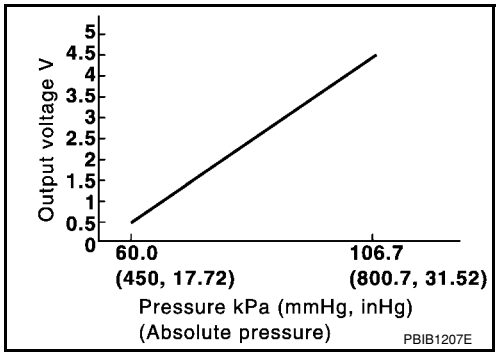

CONSULT-II Reference Value in Data Monitor Mode

INFOID:0000000001702872

Specification data are reference values.

MONITOR ITEM	CONDITION	SPECIFICATION
EVAP SYS PRES	• Ignition switch: ON	Approx. 1.8 - 4.8V

On Board Diagnosis Logic

INFOID:0000000001702873

DTC No.	Trouble diagnosis name	DTC detecting condition	Possible cause
P0453 0453	EVAP control system pressure sensor high input	An excessively high voltage from the sensor is sent to ECM.	• Harness or connectors (EVAP control system pressure sensor circuit is open or shorted.) [Crankshaft position sensor (POS) circuit is shorted.) (Accelerator pedal position sensor circuit is shorted.) (Refrigerant pressure sensor circuit is shorted.) • EVAP control system pressure sensor • Crankshaft position sensor (POS) • Accelerator pedal position sensor • Refrigerant pressure sensor • EVAP canister vent control valve • EVAP canister • Rubber hose to EVAP canister vent control valve

DTC Confirmation Procedure

INFOID:0000000001702874

NOTE:

If DTC Confirmation Procedure has been previously conducted, always turn ignition switch OFF and wait at least 10 seconds before conducting the next test.

TESTING CONDITION:

Always perform test at a temperature of 5°C (41°F) or more.

WITH CONSULT-II

1. Start engine and warm it up to normal operating temperature.
2. Turn ignition switch OFF and wait at least 10 seconds.
3. Turn ignition switch ON.
4. Select “DATA MONITOR” mode with CONSULT-II.
5. Make sure that “FUEL T/TMP SE” is more than 0°C (32°F).
6. Wait at least 10 seconds.
   If 1st trip DTC is detected, go to EC-365, "Diagnosis Procedure".

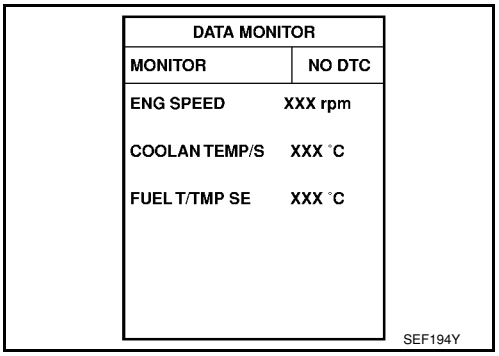

WITH GST

1. Start engine and warm it up to normal operating temperature.
2. Check that voltage between ECM terminal 43 (Fuel tank temperature sensor signal) and ground is less than 4.2V.
3. Turn ignition switch OFF and wait at least 10 seconds.
4. Wait at least 10 seconds.
5. Select Service $07 with GST.
   If 1st trip DTC is detected, go to EC-365, "Diagnosis Procedure".

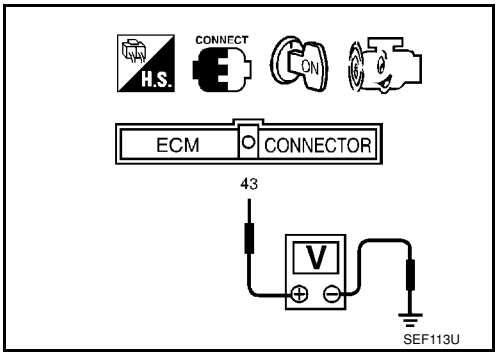

Wiring Diagram

INFOID:0000000001702875

EC-PRE/SE-01

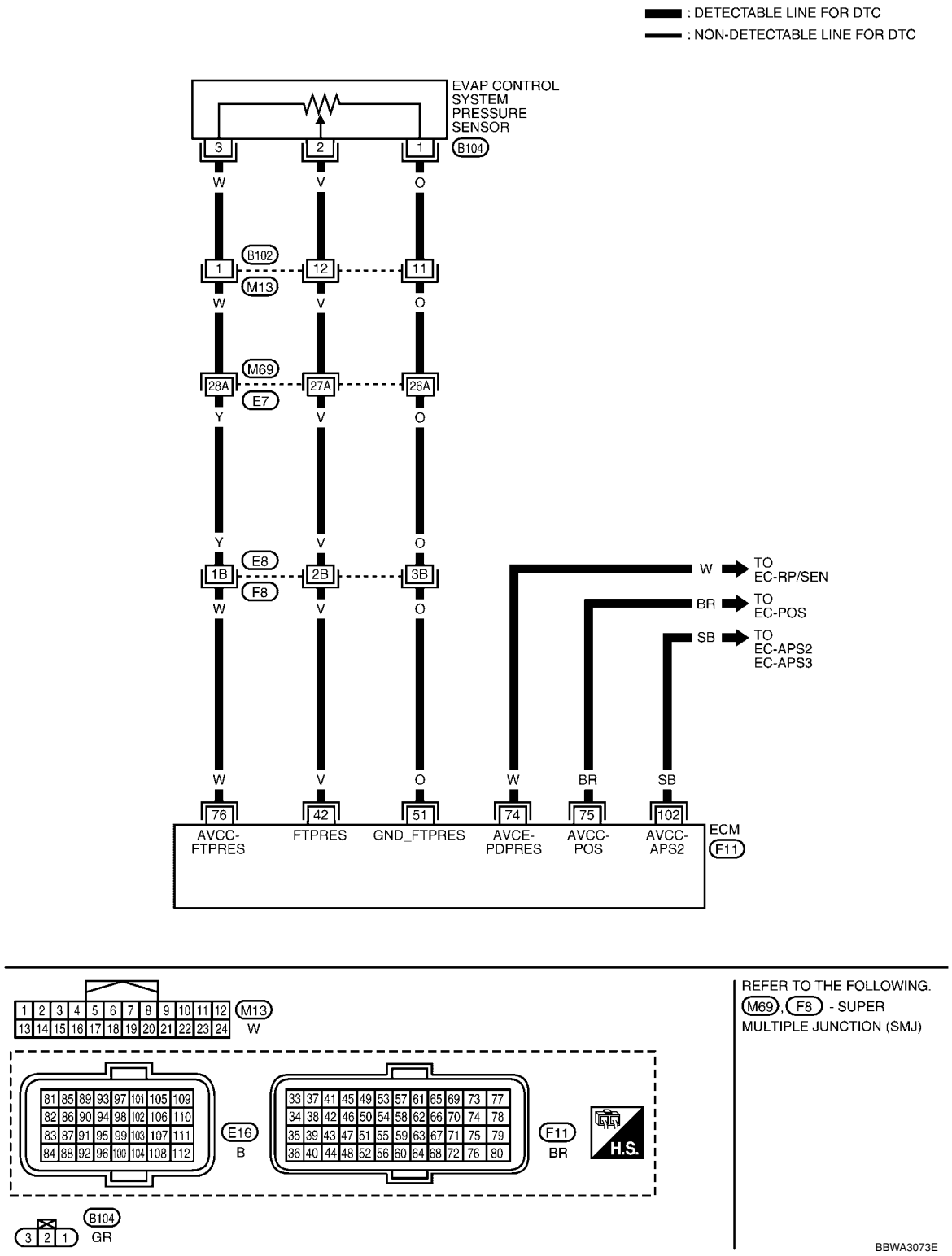

Specification data are reference values and are measured between each terminal and ground.

CAUTION:

Do not use ECM ground terminals when measuring input/output voltage. Doing so may result in damage to the ECM's transistor. Use a ground other than ECM terminals, such as the ground.

TERMINAL NO.	WIRE COLOR	ITEM	CONDITION	DATA (DC Voltage)
42	V	EVAP control system pressure sensor	**[Ignition switch: ON]**	Approximately 1.8 - 4.8V
51	O	Sensor ground (EVAP control system pressure sensor)	**[Engine is running]** • **Warm-up condition** • Idle speed	Approximately 0V
74	W	Sensor power supply (Refrigerant pressure sensor)	**[Ignition switch: ON]**	Approximately 5V
75	BR	Sensor power supply [Crankshaft position sensor (POS)]	**[Ignition switch: ON]**	Approximately 5V
76	W	EVAP control system pressure sensor power supply	**[Ignition switch: ON]**	Approximately 5V
102	SB	Sensor power supply (Accelerator pedal position sensor 2)	**[Ignition switch: ON]**	Approximately 5V

Diagnosis Procedure

INFOID:0000000001702876

1. CHECK GROUND CONNECTIONS

1. Turn ignition switch OFF.
2. Loosen and retighten ground screws on the body.
   Refer to EC-142, "Ground Inspection".

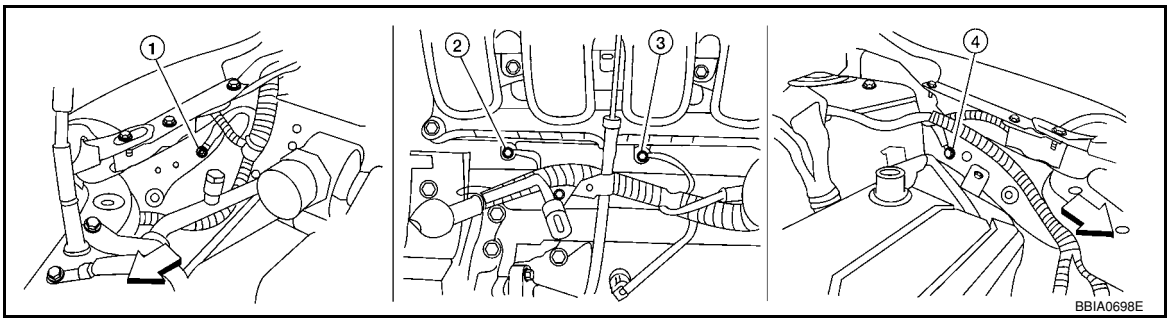

⇦: Vehicle front

1. Engine ground E24
2. Engine ground F9
3. Engine ground F16
4. Body ground E15

OK or NG

OK >> GO TO 2.
NG >> Repair or replace ground connections.

2. CHECK CONNECTOR

1. Disconnect EVAP control system pressure sensor (1) harness connector.
- EVAP canister (2)
- EVAP canister vent control valve (3)
2. Check sensor harness connector for water.

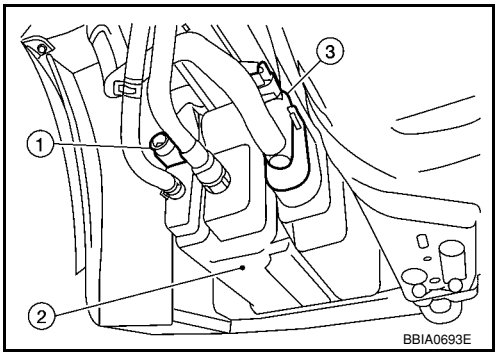

Water should not exist.

OK or NG

OK >> GO TO 3.
NG >> Repair or replace harness connector.

3. CHECK EVAP CONTROL SYSTEM PRESSURE SENSOR POWER SUPPLY CIRCUIT-I

1. Turn ignition switch ON.
2. Check voltage between EVAP control system pressure sensor terminal 3 and ground with CONSULT-II or tester.

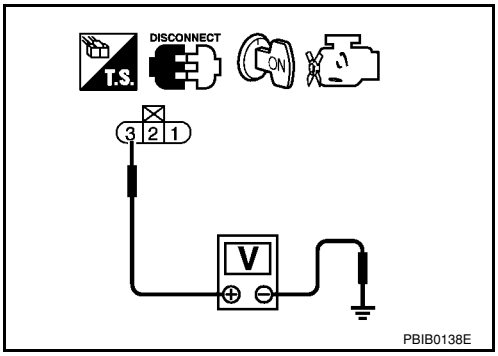

Voltage: Approximately 5V

OK or NG

OK >> GO TO 5.
NG >> GO TO 4.

4. DETECT MALFUNCTIONING PART

Check the following.
- Harness connectors E8, F8
- Harness connectors M69, E7
- Harness connectors B102, M13
- Harness for open or short between EVAP control system pressure sensor and ECM

>> Repair open circuit or short to ground or short to power in harness or connectors.

5. CHECK EVAP CONTROL SYSTEM PRESSURE SENSOR POWER SUPPLY CIRCUIT-II

1. Turn ignition switch OFF.
2. Disconnect ECM harness connector.
3. Check harness continuity between EVAP control system pressure sensor terminal 3 and ECM terminal 76.

Continuity should exist.

OK or NG

OK >> GO TO 7.
NG >> GO TO 6.

6. DETECT MALFUNCTIONING PART

Check the following.
- Harness connectors E8, F8
- Harness connectors M69, E7
- Harness connectors B102, M13
- Harness for open or short between EVAP control system pressure sensor and ECM

>> Repair open circuit or short to ground or short to power in harness or connectors.

7. CHECK COMPONENTS POWER SUPPLY

Check harness for short to power and short to ground, between the following terminals.

ECM terminal	Sensor terminal	Reference Wiring Diagram
74	Refrigerant pressure sensor terminal 3	EC-542, "Wiring Diagram"
75	Crankshaft position sensor (POS) terminal 1	EC-297, "Wiring Diagram"
76	EVAP control system pressure sensor terminal 3	EC-357, "Wiring Diagram"
102	APP sensor terminal 5	EC-482, "Wiring Diagram"

OK or NG

OK >> GO TO 8.
NG >> Repair short to ground or short to power in harness or connectors.

8. CHECK COMPONENTS

Check the following.
- Refrigerant pressure sensor (Refer to MTC-22.)
- Crankshaft position sensor (POS) (Refer to EC-301, "Component Inspection".)

OK or NG

OK >> GO TO 9.
NG >> Replace malfunctioning components.

9. CHECK APP SENSOR

Refer to EC-485, "Component Inspection".

OK or NG

OK >> GO TO 11.
NG >> GO TO 10.

10. REPLACE ACCELERATOR PEDAL ASSEMBLY

1. Replace accelerator pedal assembly.
2. Perform EC-76, "Accelerator Pedal Released Position Learning".
3. Perform EC-76, "Throttle Valve Closed Position Learning".
4. Perform EC-76, "Idle Air Volume Learning".

>> **INSPECTION END**

11. CHECK EVAP CONTROL SYSTEM PRESSURE SENSOR GROUND CIRCUIT FOR OPEN AND SHORT

1. Turn ignition switch OFF.
2. Disconnect ECM harness connector.
3. Check harness continuity between EVAP control system pressure sensor terminal 1 and ECM terminal 51. Refer to Wiring Diagram.

Continuity should exist.

4. Also check harness for short to ground and short to power.

OK or NG

OK >> GO TO 13.
NG >> GO TO 12.

12. DETECT MALFUNCTIONING PART

Check the following.
- Harness connectors E85, F8
- Harness connectors M69, E7
- Harness connectors B102, M13
- Harness for open or short between EVAP control system pressure sensor and ECM

>> Repair open circuit or short to ground or short to power in harness or connectors.

13. CHECK EVAP CONTROL SYSTEM PRESSURE SENSOR INPUT SIGNAL CIRCUIT FOR OPEN AND SHORT

1. Check harness continuity between ECM terminal 42 and EVAP control system pressure sensor terminal 2. Refer to Wiring Diagram.

Continuity should exist.

2. Also check harness for short to ground and short to power.

OK or NG

OK >> GO TO 15.
NG >> GO TO 14.

14. DETECT MALFUNCTIONING PART

Check the following.
- Harness connectors E8, F8
- Harness connectors M69, E7
- Harness connectors B102, M13
- Harness for open or short between ECM and EVAP control system pressure sensor

>> Repair open circuit or short to ground or short to power in harness or connectors.

15. CHECK RUBBER TUBE

1. Disconnect rubber tube connected to EVAP canister vent control valve.
2. Check the rubber tube for clogging, vent and kinked.

OK or NG

OK >> GO TO 16.
NG >> Clean the rubber tube using an air blower, repair or replace rubber tube.

16. CHECK EVAP CANISTER VENT CONTROL VALVE

Refer to EC-343, "Component Inspection".

OK or NG

OK >> GO TO 17.
NG >> Replace EVAP canister vent control valve.

17. CHECK EVAP CONTROL SYSTEM PRESSURE SENSOR

Refer to EC-369, "Component Inspection".

OK or NG

OK >> GO TO 18.
NG >> Replace EVAP control system pressure sensor.

18. CHECK IF EVAP CANISTER SATURATED WITH WATER

1. Remove EVAP canister with EVAP canister vent control valve and EVAP control system pressure sensor attached.
2. Does water drain from the EVAP canister?

Yes or No

Yes >> GO TO 19.
No >> GO TO 21.

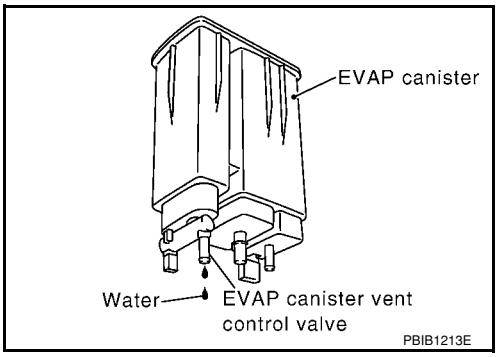

19. CHECK EVAP CANISTER

Weigh the EVAP canister with the EVAP canister vent control valve and EVAP control system pressure sensorattached.

The weight should be less than 1.9 kg (4.2 lb).

OK or NG

OK >> GO TO 21.
NG >> GO TO 20.

20. DETECT MALFUNCTIONING PART

Check the following.
- EVAP canister for damage
- EVAP hose connected to EVAP canister for clogging or poor connection

>> Repair hose or replace EVAP canister.

21. CHECK INTERMITTENT INCIDENT

Refer to EC-136.

>> **INSPECTION END**

Component Inspection

INFOID:0000000001702877

EVAP CONTROL PRESSURE SENSOR

1. Remove EVAP control system pressure sensor with its harness connector connected from EVAP canister. **Always replace O-ring with a new one.**
2. Install a vacuum pump to EVAP control system pressure sensor.
3. Turn ignition switch ON and check output voltage between ECM terminal 42 (EVAP control system pressure sensor signal) and ground under the following conditions.

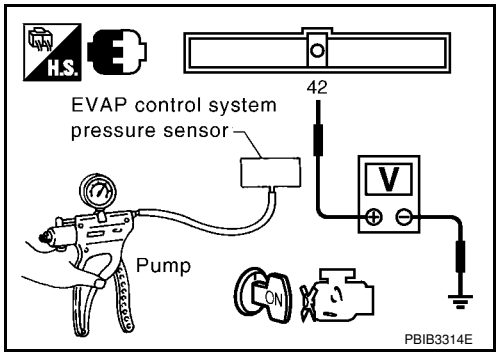

Applied vacuum kPa (mmHg, inHg)	Voltage V
Not applied	1.8 - 4.8
-26.7 (-200, -7.87)	2.1 to 2.5V lower than above value

CAUTION:
- **Always calibrate the vacuum pump gauge when using it.**
- **Do not apply below -93.3 kPa (-700 mmHg, -27.56 inHg) or pressure over 101.3 kPa (760 mmHg, 29.92 inHg).**

4. If NG, replace EVAP control system pressure sensor.

DTC P0455 EVAP CONTROL SYSTEM

On Board Diagnosis Logic

INFOID:0000000001702878

This diagnosis detects a very large leak (fuel filler cap fell off etc.) in EVAP system between the fuel tank and EVAP canister purge volume control solenoid valve.

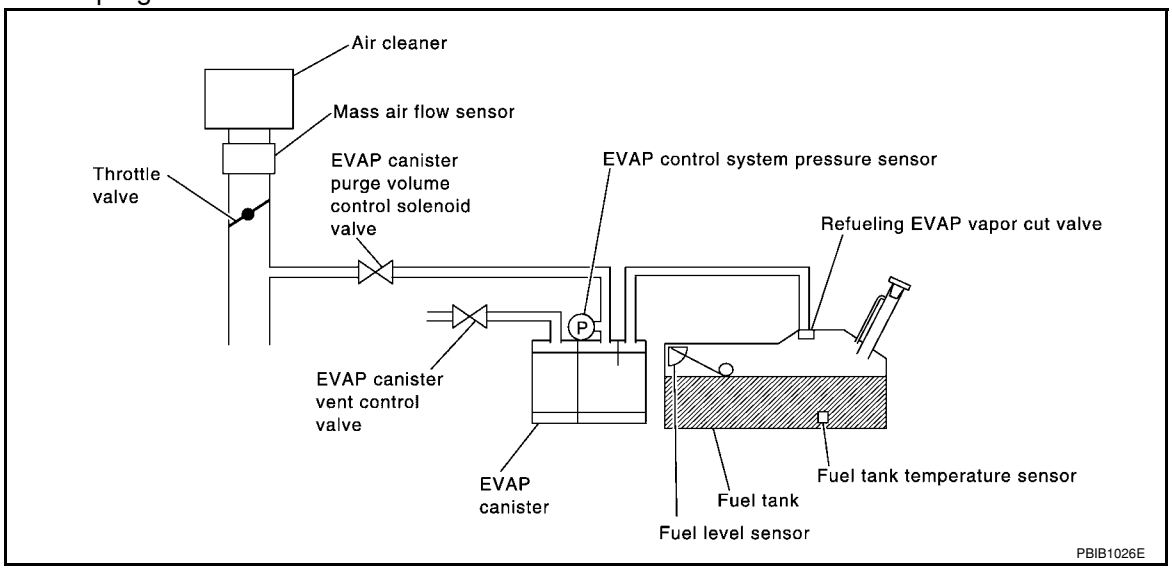

DTC No.	Trouble diagnosis name	DTC detecting condition	Possible cause
P0455 0455	EVAP control system gross leak detected	• EVAP control system has a very large leak such as fuel filler cap fell off. • EVAP control system does not operate properly.	• Fuel filler cap remains open or fails to close. • Incorrect fuel tank vacuum relief valve • Incorrect fuel filler cap used • Foreign matter caught in fuel filler cap. • Leak is in line between intake manifold and EVAP canister purge volume control solenoid valve. • Foreign matter caught in EVAP canister vent control valve. • EVAP canister or fuel tank leaks • EVAP purge line (pipe and rubber tube) leaks • EVAP purge line rubber tube bent. • Loose or disconnected rubber tube • EVAP canister vent control valve and the circuit • EVAP canister purge volume control solenoid valve and the circuit • Fuel tank temperature sensor • O-ring of EVAP canister vent control valve is missing or damaged. • EVAP control system pressure sensor • Refueling EVAP vapor cut valve • ORVR system leaks

CAUTION:
- **Use only a genuine NISSAN fuel filler cap as a replacement. If an incorrect fuel filler cap is used, the MIL may come on.**
- **If the fuel filler cap is not tightened properly, the MIL may come on.**
- **Use only a genuine NISSAN rubber tube as a replacement.**

DTC Confirmation Procedure

INFOID:0000000001702879

CAUTION:
Never remove fuel filler cap during the DTC Confirmation Procedure.
NOTE:

- **Make sure that EVAP hose are connected to EVAP canister purge volume control solenoid valve properly.**
- If DTC Confirmation Procedure has been previously conducted, always turn ignition switch OFF and wait at least 10 seconds before conducting the next test.

TESTING CONDITION:

- **Perform "DTC WORK SUPPORT" when the fuel level is between 1/4 and 3/4 full, and vehicle is placed on flat level surface.**
- **Open engine hood before conducting the following procedure.**

WITH CONSULT-II

1. Tighten fuel filler cap securely until reteaching sound is heard.
2. Turn ignition switch ON.
3. Turn ignition switch OFF and wait at least 10 seconds.
4. Turn ignition switch ON and select "DATA MONITOR" mode with CONSULT-II.
5. Make sure that the following conditions are met.
   COOLAN TEMP/S: 0 - 70°C (32 - 158°F)
   INT/A TEMP SE: 0 - 60°C (32 - 140°F)
6. Select "EVAP SML LEAK P0442/P1442" of "EVAPORATIVE SYSTEM" in "DTC WORK SUPPORT" mode with CONSULT-II. Follow the instruction displayed.

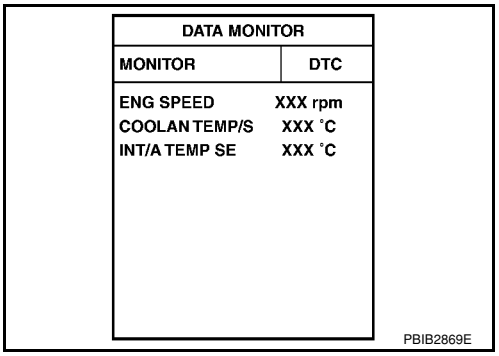

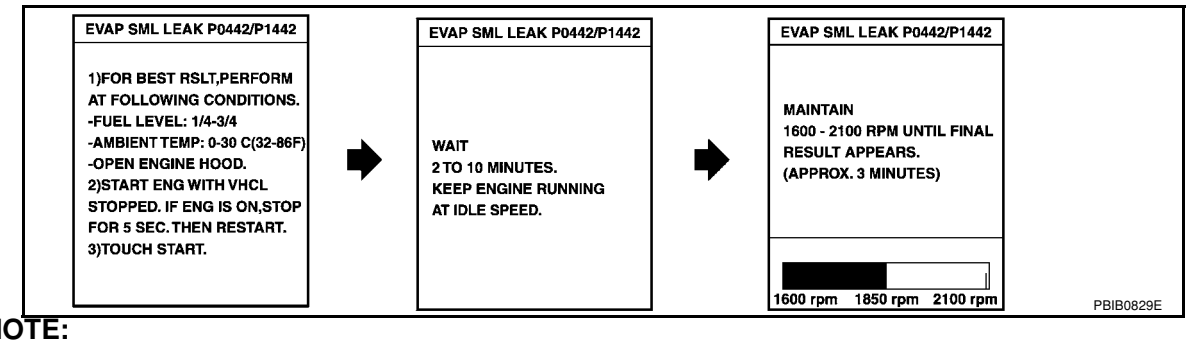

NOTE:
If the engine speed cannot be maintained within the range displayed on the CONSULT-II screen, go to EC-69, "Basic Inspection".

7. Make sure that "OK" is displayed.
   If "NG" is displayed, select "SELF-DIAG RESULTS" mode with CONSULT-II and make sure that "EVAP GROSS LEAK [P0455]" is displayed. If it is displayed, refer to EC-372, "Diagnosis Procedure".
   If P0442 is displayed, perform Diagnostic Procedure for DTC P0442, EC-320, "Diagnosis Procedure".

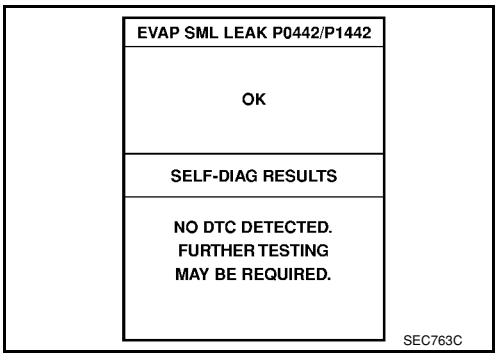

WITH GST

NOTE:
Be sure to read the explanation of Driving Pattern on EC-47, "Emission-related Diagnostic Information" before driving vehicle.

1. Start engine.
2. Drive vehicle according to Driving Pattern, EC-47, "Emission-related Diagnostic Information".
3. Stop vehicle.
4. Turn ignition switch OFF, wait at least 10 seconds and then turn ignition switch ON.

5. Select Service $07 with GST.

- If P0441 is displayed on the screen, go to EC-315, "Diagnosis Procedure" for DTC P0441.
- If P0442 is displayed on the screen, go to EC-320, "Diagnosis Procedure" for DTC P0442.
- If P0455 is displayed on the screen, go to EC-372, "Diagnosis Procedure".

Diagnosis Procedure

INFOID:0000000001702880

1. CHECK FUEL FILLER CAP DESIGN

1. Turn ignition switch OFF.
2. Check for genuine NISSAN fuel filler cap design.

OK or NG

OK >> GO TO 2.
NG >> Replace with genuine NISSAN fuel filler cap.

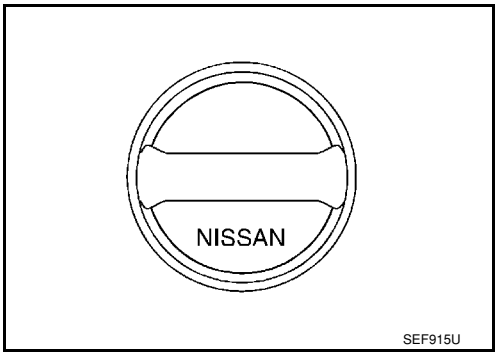

2. CHECK FUEL FILLER CAP INSTALLATION

Check that the cap is tightened properly by rotating the cap clockwise.

OK or NG

OK >> GO TO 3.
NG >> 1. Open fuel filler cap, then clean cap and fuel filler neck threads using air blower.
2. Retighten until reteaching sound is heard.

3. CHECK FUEL FILLER CAP FUNCTION

Check for air releasing sound while opening the fuel filler cap.

OK or NG

OK >> GO TO 5.
NG >> GO TO 4.

4. CHECK FUEL TANK VACUUM RELIEF VALVE

Refer to EC-33, "Component Inspection".

OK or NG

OK >> GO TO 5.
NG >> Replace fuel filler cap with a genuine one.

5. CHECK EVAP PURGE LINE

Check EVAP purge line (pipe, rubber tube, fuel tank and EVAP canister) for cracks, improper connection or disconnection.
Refer to EC-31.

OK or NG

OK >> GO TO 6.
NG >> Repair or reconnect the hose.

6. CLEAN EVAP PURGE LINE

Clean EVAP purge line (pipe and rubber tube) using air blower.

>> GO TO 7.

7. CHECK EVAP CANISTER VENT CONTROL VALVE

Check the following.

- EVAP canister vent control is installed properly.
  Refer to EC-35, "Removal and Installation".
- EVAP canister vent control valve.

Refer to EC-343, "Component Inspection".

OK or NG

OK >> GO TO 8.
NG >> Repair or replace EVAP canister vent control valve and O-ring.

8. INSTALL THE PRESSURE PUMP

To locate the EVAP leak, install EVAP service port adapter and pressure pump to EVAP service port securely.
For the location of EVAP service port (2), refer to EC-31, "Description".

- EVAP canister purge volume control solenoid valve (1)
- ⇦: Vehicle front

NOTE:
Improper installation of the EVAP service port adapter to the EVAP service port may cause leaking.

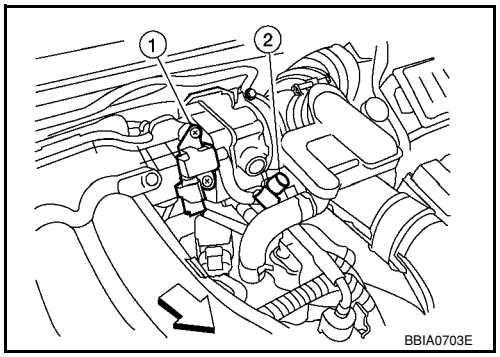

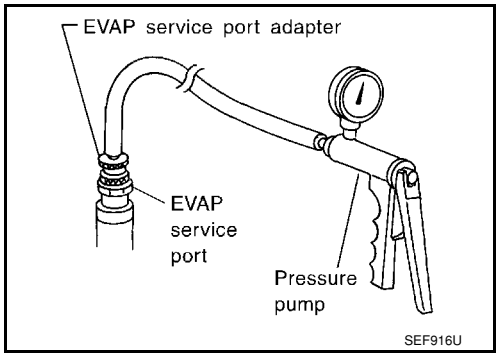

With CONSULT-II>>GO TO 9.
Without CONSULT-II>>GO TO 10.

9. CHECK FOR EVAP LEAK

With CONSULT-II

1. Turn ignition switch ON.
2. Select “EVAP SYSTEM CLOSE” of “WORK SUPPORT” mode with CONSULT-II.
3. Touch “START” and apply pressure into the EVAP line until the pressure indicator reaches the middle of the bar graph.
   CAUTION:
   - **Never use compressed air or a high pressure pump.**
   - **Do not exceed 4.12 kPa (0.042 kg/cm^2, 0.6 psi) of pressure in the system.**

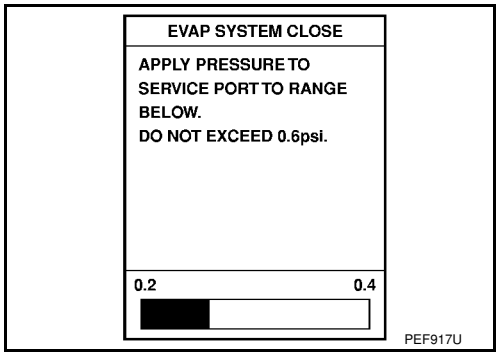

4. Using EVAP leak detector, locate the EVAP leak. For the leak detector, refer to the instruction manual for more details.
   Refer to EC-31, "Description".

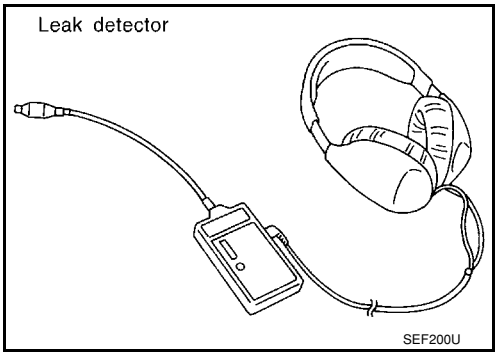

OK or NG

OK >> GO TO 11.
NG >> Repair or replace.

10. CHECK FOR EVAP LEAK

Without CONSULT-II

1. Turn ignition switch OFF.
2. Apply 12 volts DC to EVAP canister vent control valve (3). The valve will close. (Continue to apply 12 volts until the end of test.)
- EVAP control system pressure sensor (1)
- EVAP canister (2)

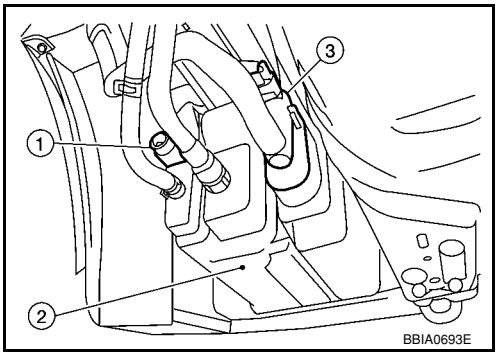

3. Pressurize the EVAP line using pressure pump with 1.3 to 2.7 kPa (10 to 20 mmHg, 0.39 to 0.79 inHg), then remove pump and EVAP service port adapter.
   CAUTION:
   - **Never use compressed air or a high pressure pump.**
   - **Do not exceed 4.12 kPa (0.042 kg/cm^2, 0.6 psi) of pressure in the system.**

4. Using EVAP leak detector, locate the EVAP leak. For the leak detector, refer to the instruction manual for more details.
   Refer to EC-31, "Description".

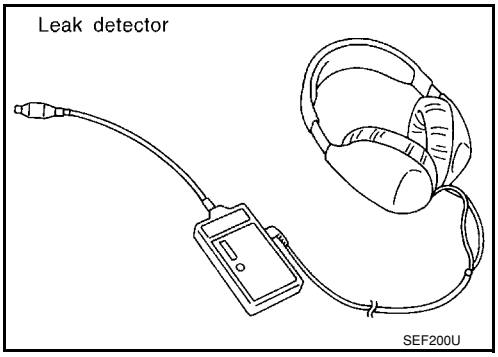

OK or NG

OK >> GO TO 12.
NG >> Repair or replace.

11. CHECK EVAP CANISTER PURGE VOLUME CONTROL SOLENOID VALVE OPERATION

With CONSULT-II

1. Disconnect vacuum hose to EVAP canister purge volume control solenoid valve at EVAP service port.
2. Start engine.

3. Perform “PURG VOL CONT/V” in “ACTIVE TEST” mode.
4. Touch “Qu” on CONSULT-II screen to increase “PURG VOL CONT/V” opening to 100%.
5. Check vacuum hose for vacuum.

Vacuum should exist.

ACTIVE TEST	
PURG VOL CONT/V	XXX %
MONITOR	
ENG SPEED	XXX rpm
A/F ALPHA-B1	XXX %

PBIB1786E

OK or NG

OK >> GO TO 14.
NG >> GO TO 13.

12. CHECK EVAP CANISTER PURGE VOLUME CONTROL SOLENOID VALVE OPERATION

Without CONSULT-II

1. Start engine and warm it up to normal operating temperature.
2. Stop engine.
3. Disconnect vacuum hose to EVAP canister purge volume control solenoid valve at EVAP service port.
4. Start engine and let it idle for at least 80 seconds.
5. Check vacuum hose for vacuum when revving engine up to 2,000 rpm.

Vacuum should exist.

OK or NG

OK >> GO TO 15.
NG >> GO TO 13.

13. CHECK VACUUM HOSE

Check vacuum hoses for clogging or disconnection. Refer to EC-99, "Vacuum Hose Drawing".

OK or NG

OK (With CONSULT-II)>>GO TO 14.
OK (Without CONSULT-II)>>GO TO 15.
NG >> Repair or reconnect the hose.

14. CHECK EVAP CANISTER PURGE VOLUME CONTROL SOLENOID VALVE

With CONSULT-II

1. Start engine.
2. Perform “PURG VOL CONT/V” in “ACTIVE TEST” mode with CONSULT-II. Check that engine speed varies according to the valve opening.

ACTIVE TEST	
PURG VOL CONT/V	XXX %
MONITOR	
ENG SPEED	XXX rpm
A/F ALPHA-B1	XXX %

PBIB1786E

OK or NG

OK >> GO TO 16.
NG >> GO TO 15.

15. CHECK EVAP CANISTER PURGE VOLUME CONTROL SOLENOID VALVE

Refer to EC-337, "Component Inspection".

OK or NG

OK >> GO TO 16.
NG >> Replace EVAP canister purge volume control solenoid valve.

16. CHECK FUEL TANK TEMPERATURE SENSOR

Refer to EC-273, "Component Inspection".

OK or NG

OK >> GO TO 17.

NG >> Replace fuel level sensor unit.

17. CHECK EVAP CONTROL SYSTEM PRESSURE SENSOR

Refer to EC-361, "Component Inspection".

OK or NG

OK >> GO TO 18.
NG >> Replace EVAP control system pressure sensor.

18. CHECK EVAP/ORVR LINE

Check refueling EVAP/ORVR line between EVAP canister and fuel tank for clogging, kink, looseness and improper connection. For location, refer to EC-38.

OK or NG

OK >> GO TO 19.
>> Repair or replace hoses and tubes.

19. CHECK RECIRCULATION LINE

Check recirculation line between filler neck tube and fuel tank for clogging, kink, cracks, looseness and improper connection.

OK or NG

OK >> GO TO 20.
>> Repair or replace hoses, tubes or filler neck tube.

20. CHECK REFUELING EVAP VAPOR CUT VALVE

Refer to EC-40, "Component Inspection".

OK or NG

OK >> GO TO 21.
>> Replace refueling EVAP vapor cut valve with fuel tank.

21. CHECK INTERMITTENT INCIDENT

Refer to EC-136.

>> **INSPECTION END**

DTC P0456 EVAP CONTROL SYSTEM

On Board Diagnosis Logic

INFOID:0000000001702881

This diagnosis detects very small leaks in the EVAP line between fuel tank and EVAP canister purge volume control solenoid valve, using the intake manifold vacuum in the same way as conventional EVAP small leak diagnosis.
If ECM judges a leak which corresponds to a very small leak, the very small leak P0456 will be detected.
If ECM judges a leak equivalent to a small leak, EVAP small leak P0442 will be detected.
If ECM judges there are no leaks, the diagnosis will be OK.

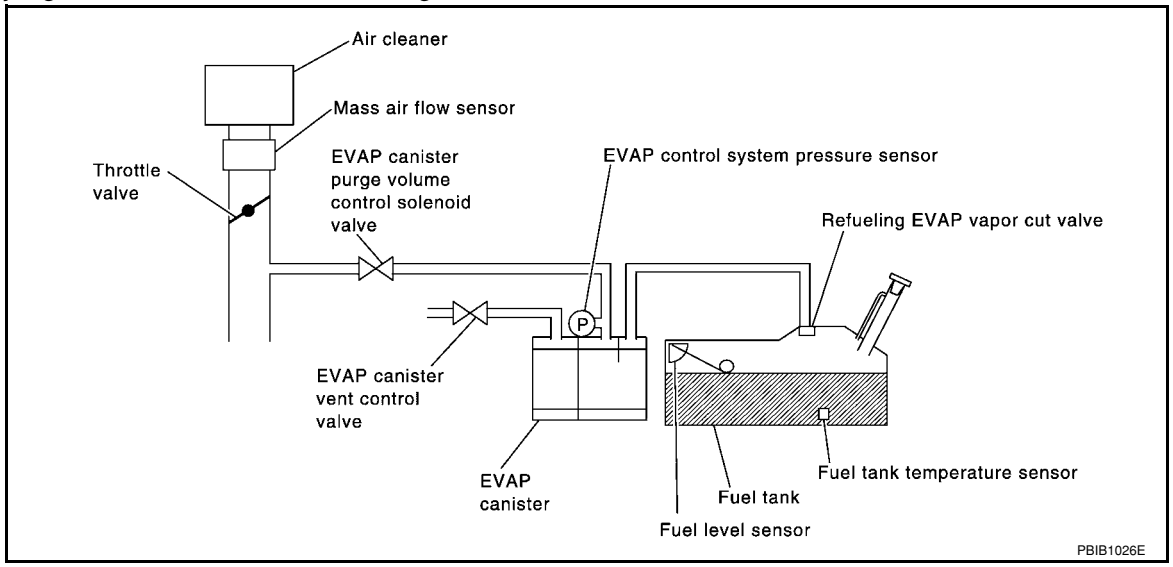

DTC No.	Trouble diagnosis name	DTC detecting condition	Possible cause
P0456 0456	Evaporative emission control system very small leak (negative pressure check)	• EVAP system has a very small leak. • EVAP system does not operate properly.	• Incorrect fuel tank vacuum relief valve • Incorrect fuel filler cap used • Fuel filler cap remains open or fails to close. • Foreign matter caught in fuel filler cap. • Leak is in line between intake manifold and EVAP canister purge volume control solenoid valve. • Foreign matter caught in EVAP canister vent control valve. • EVAP canister or fuel tank leaks • EVAP purge line (pipe and rubber tube) leaks • EVAP purge line rubber tube bent • Loose or disconnected rubber tube • EVAP canister vent control valve and the circuit • EVAP canister purge volume control solenoid valve and the circuit • Fuel tank temperature sensor • O-ring of EVAP canister vent control valve is missing or damaged • EVAP canister is saturated with water • EVAP control system pressure sensor • Refueling EVAP vapor cut valve • ORVR system leaks • Fuel level sensor and the circuit • Foreign matter caught in EVAP canister purge volume control solenoid valve

CAUTION:
- **Use only a genuine NISSAN fuel filler cap as a replacement. If an incorrect fuel filler cap is used, the MIL may come on.**
- **If the fuel filler cap is not tightened properly, the MIL may come on.**
- **Use only a genuine NISSAN rubber tube as a replacement.**

DTC Confirmation Procedure

INFOID:0000000001702882

NOTE:
- **If DTC P0456 is displayed with P0442, first perform trouble diagnosis for DTC P0456.**
- **After repair, make sure that the hoses and clips are installed properly.**
- If DTC Confirmation Procedure has been previously conducted, always turn ignition switch OFF and wait at least 10 seconds before conducting the next test.

TESTING CONDITION:
- **Open engine hood before conducting following procedure.**
- **If any of following conditions are met just before the DTC confirmation procedure, leave the vehicle for more than 1 hour.**
- **Fuel filler cap is removed.**
- **Refilled or drained the fuel.**
- **EVAP component parts is/are removed.**
- **Before performing the following procedure, confirm that battery voltage is more than 11V at idle.**

WITH CONSULT-II

1. Turn ignition switch ON and select “DATA MONITOR” mode with CONSULT-II.
2. Make sure the following conditions are met.
   FUEL LEVEL SE: 0.25 - 1.4V
   COOLAN TEMP/S: 0 - 32°C (32 - 90°F)
   FUEL T/TMP SE: 0 - 35°C (32 - 95°F)
   INT/A TEMP SE: More than 0°C (32°F)
   If NG, turn ignition switch OFF and leave the vehicle in a cool place (soak the vehicle) or refilling/draining fuel until the output voltage condition of the “FUEL LEVEL SE” meets within the range above and leave the vehicle for more than 1 hour. Then start from step 1).

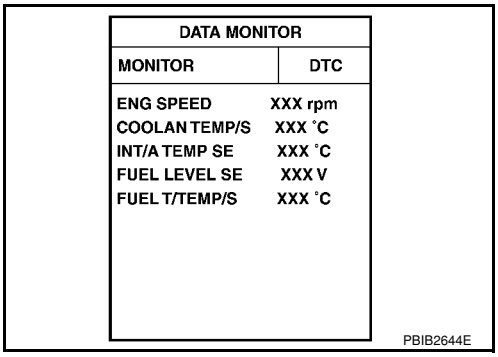

3. Turn ignition switch OFF and wait at least 10 seconds.
4. Turn ignition switch ON.
5. Select “EVAP V/S LEAK P0456” of “EVAPORATIVE SYSTEM” in “DTC WORK SUPPORT” mode with CONSULT-II.
   Follow the instruction displayed.

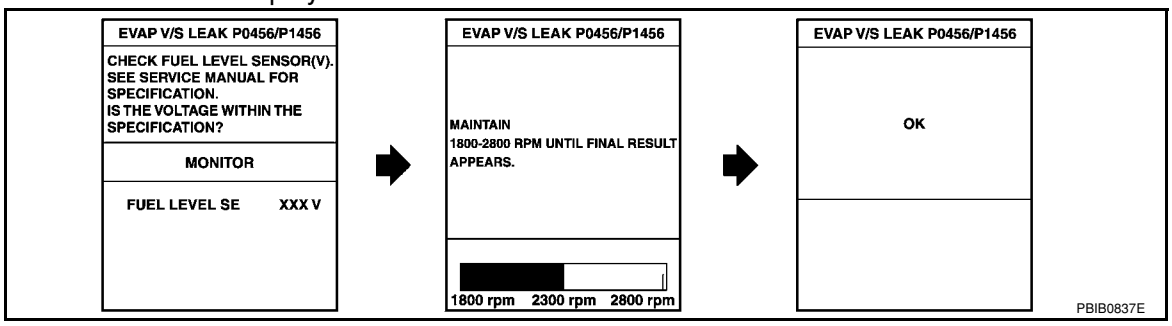

6. Make sure that “OK” is displayed.
   If “NG” is displayed, refer to EC-379, "Diagnosis Procedure".
   NOTE:
   - **If the engine speed cannot be maintained within the range displayed on CONSULT-II screen, go to EC-69, "Basic Inspection".**
   - **Make sure that EVAP hoses are connected to EVAP canister purge volume control solenoid valve properly.**

Overall Function Check

INFOID:0000000001702883

WITH GST

Use this procedure to check the overall function of the EVAP very small leak function. During this check, a 1st trip DTC might not be confirmed.

CAUTION:
- **Never use compressed air, doing so may damage the EVAP system.**
- **Do not start engine.**

- **Do not exceeded 4.12 kPa (0.042 kg/cm^2, 0.6 psi).**

1. Attach the EVAP service port adapter securely to the EVAP service port (2).

- EVAP canister purge volume control solenoid valve (1)
- ⇦: Vehicle front

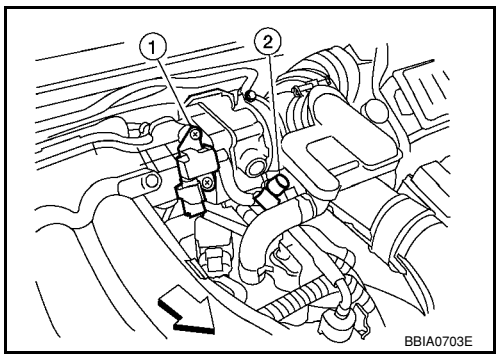

2. Set the pressure pump and a hose.
3. Also set the pressure pump with pressure gauge to the EVAP service port adapter.
4. Turn ignition switch ON.
5. Connect GST and select Service $08.
6. Using Service $08 control the EVAP canister vent control valve (close).
7. Apply pressure and make sure the following conditions are satisfied.
   Pressure to be applied: 2.7 kPa (20 mmHg, 0.79 inHg)
   Time to be waited after the pressure drawn in to the EVAP system and the pressure to be dropped: 60 seconds and the pressure should not be dropped more than 0.4 kPa (3 mmHg, 0.12 inHg).
   If NG, go to EC-379, "Diagnosis Procedure".
   If OK, go to next step.
8. Disconnect GST.
9. Start engine and warm it up to normal operating temperature.
10. Turn ignition switch OFF and wait at least 10 seconds.
11. Restart engine and let it idle for 90 seconds.
12. Keep engine speed at 2,000 rpm for 30 seconds.
13. Turn ignition switch OFF.
    NOTE:
    For more information, refer to GST Instruction Manual.

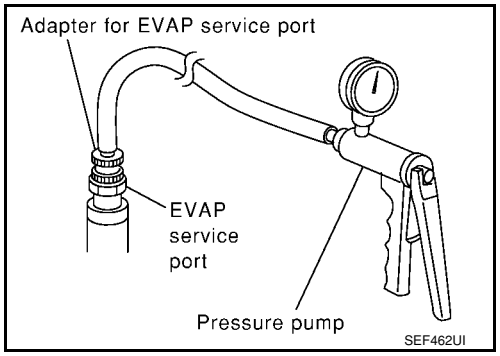

Diagnosis Procedure

INFOID:0000000001702884

1. CHECK FUEL FILLER CAP DESIGN

1. Turn ignition switch OFF.
2. Check for genuine NISSAN fuel filler cap design.

OK or NG

OK >> GO TO 2.
NG >> Replace with genuine NISSAN fuel filler cap.

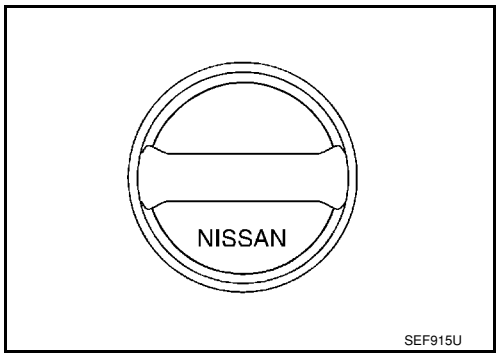

2. CHECK FUEL FILLER CAP INSTALLATION

Check that the cap is tightened properly by rotating the cap clockwise.

OK or NG

OK >> GO TO 3.
NG >> 1. Open fuel filler cap, then clean cap and fuel filler neck threads using air blower.
2. Retighten until reteaching sound is heard.

3. CHECK FUEL FILLER CAP FUNCTION

Check for air releasing sound while opening the fuel filler cap.

OK or NG

OK >> GO TO 5.
NG >> GO TO 4.

4. CHECK FUEL TANK VACUUM RELIEF VALVE

Refer to EC-33, "Component Inspection".

OK or NG

OK >> GO TO 5.
NG >> Replace fuel filler cap with a genuine one.

5. INSTALL THE PRESSURE PUMP

To locate the EVAP leak, install EVAP service port adapter and pressure pump to EVAP service port securely. For the location of EVAP service port (2), refer to EC-31, "Description".

- EVAP canister purge volume control solenoid valve (1)
- ⇦: Vehicle front

NOTE:
Improper installation of the EVAP service port adapter to the EVAP service port may cause leaking.

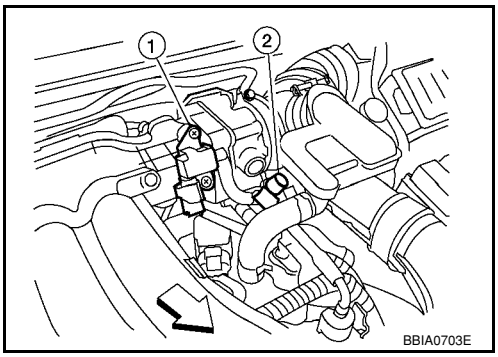

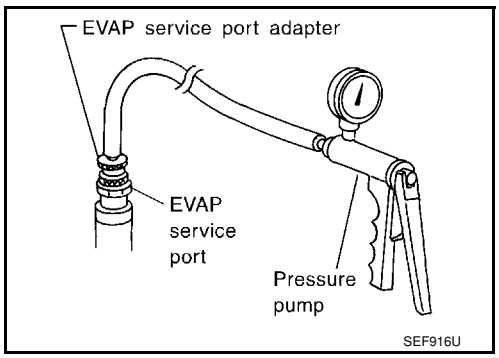

With CONSULT-II>>GO TO 6.
Without CONSULT-II>>GO TO 7.

6. CHECK FOR EVAP LEAK

With CONSULT-II

1. Turn ignition switch ON.
2. Select “EVAP SYSTEM CLOSE” of “WORK SUPPORT” mode with CONSULT-II.
3. Touch “START” and apply pressure into the EVAP line until the pressure indicator reaches the middle of the bar graph.
   CAUTION:
   - **Never use compressed air or a high pressure pump.**
   - **Do not exceed 4.12 kPa (0.042 kg/cm^2, 0.6 psi) of pressure in the system.**

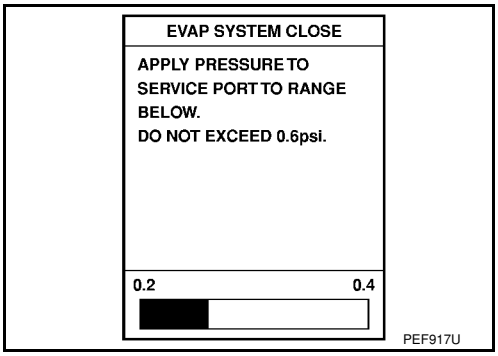

4. Using EVAP leak detector, locate the EVAP leak. For the leak detector, refer to the instruction manual for more details.
   Refer to EC-31, "Description".

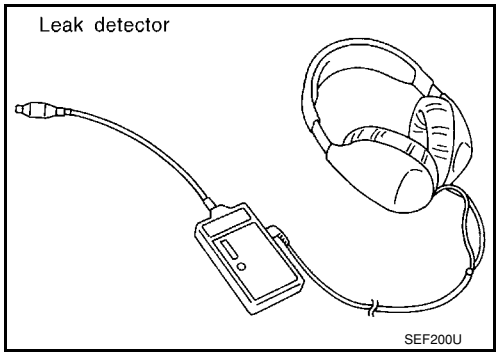

OK or NG

OK >> GO TO 8.
NG >> Repair or replace.

7. CHECK FOR EVAP LEAK

Without CONSULT-II

1. Turn ignition switch OFF.
2. Apply 12 volts DC to EVAP canister vent control valve (3). The valve will close. (Continue to apply 12 volts until the end of test.)
- EVAP control system pressure sensor (1)
- EVAP canister (2)

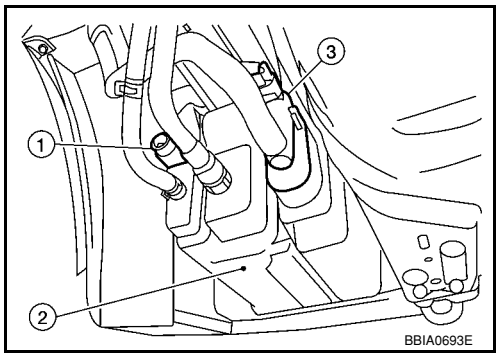

3. Pressurize the EVAP line using pressure pump with 1.3 to 2.7 kPa (10 to 20 mmHg, 0.39 to 0.79 inHg), then remove pump and EVAP service port adapter.
   CAUTION:
   - **Never use compressed air or a high pressure pump.**
   - **Do not exceed 4.12 kPa (0.042 kg/cm^2, 0.6 psi) of pressure in the system.**

4. Using EVAP leak detector, locate the EVAP leak. For the leak detector, refer to the instruction manual for more details.
   Refer to EC-31, "Description".

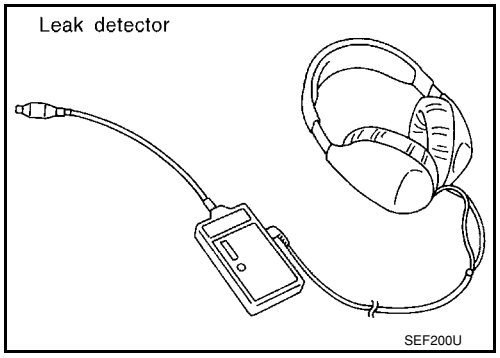

OK or NG

OK >> GO TO 8.
NG >> Repair or replace.

8. CHECK EVAP CANISTER VENT CONTROL VALVE

Check the following.
- EVAP canister vent control valve is installed properly.
  Refer to EC-35, "Removal and Installation".
- EVAP canister vent control valve.
  Refer to EC-343, "Component Inspection".

OK or NG

OK >> GO TO 9.
NG >> Repair or replace EVAP canister vent control valve and O-ring.

9. CHECK IF EVAP CANISTER SATURATED WITH WATER

1. Remove EVAP canister with EVAP canister vent control valve and EVAP control system pressure sensor attached.

2. Does water drain from the EVAP canister?

Yes or No

Yes >> GO TO 10.
No (With CONSULT-II)>>GO TO 12.
No (Without CONSULT-II)>>GO TO 13.

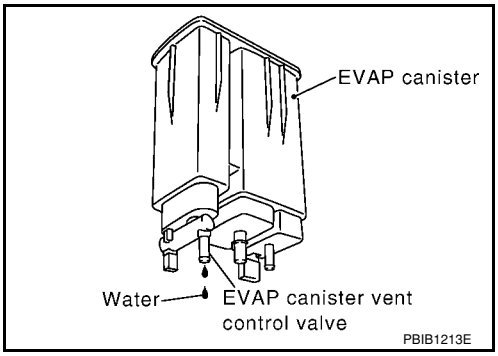

10. CHECK EVAP CANISTER

Weigh the EVAP canister with the EVAP canister vent control valve and EVAP control system pressure sensor attached.

The weight should be less than 1.9 kg (4.2 lb).

OK or NG

OK (With CONSULT-II)>>GO TO 12.
OK (Without CONSULT-II)>>GO TO 13.
NG >> GO TO 11.

11. DETECT MALFUNCTIONING PART

Check the following.
- EVAP canister for damage
- EVAP hose between EVAP canister and vehicle frame for clogging or poor connection

>> Repair hose or replace EVAP canister.

12. CHECK EVAP CANISTER PURGE VOLUME CONTROL SOLENOID VALVE OPERATION

With CONSULT-II

1. Disconnect vacuum hose to EVAP canister purge volume control solenoid valve at EVAP service port.
2. Start engine.
3. Perform “PURG VOL CONT/V” in “ACTIVE TEST” mode.
4. Touch “Qu” on CONSULT-II screen to increase “PURG VOL CONT/V” opening to 100%.
5. Check vacuum hose for vacuum.

Vacuum should exist.

OK or NG

OK >> GO TO 15.
NG >> GO TO 14.

ACTIVE TEST	
PURG VOL CONT/V	XXX %
MONITOR	
ENG SPEED	XXX rpm
A/F ALPHA-B1	XXX %

PBIB1786E

13. CHECK EVAP CANISTER PURGE VOLUME CONTROL SOLENOID VALVE OPERATION

Without CONSULT-II

1. Start engine and warm it up to normal operating temperature.
2. Stop engine.
3. Disconnect vacuum hose to EVAP canister purge volume control solenoid valve at EVAP service port.
4. Start engine and let it idle for at least 80 seconds.
5. Check vacuum hose for vacuum when revving engine up to 2,000 rpm.

Vacuum should exist.

OK or NG

OK >> GO TO 16.
NG >> GO TO 14.

14. CHECK VACUUM HOSE

Check vacuum hoses for clogging or disconnection. Refer to EC-99, "Vacuum Hose Drawing".

OK or NG

OK >> GO TO 15.
NG >> Repair or reconnect the hose.

15. CHECK EVAP CANISTER PURGE VOLUME CONTROL SOLENOID VALVE

Refer to EC-337, "Component Inspection".

OK or NG

OK >> GO TO 16.
NG >> Replace EVAP canister purge volume control solenoid valve.

16. CHECK FUEL TANK TEMPERATURE SENSOR

Refer to EC-273, "Component Inspection".

OK or NG

OK >> GO TO 17.
NG >> Replace fuel level sensor unit.

17. CHECK EVAP CONTROL SYSTEM PRESSURE SENSOR

Refer to EC-361, "Component Inspection".

OK or NG

OK >> GO TO 18.
NG >> Replace EVAP control system pressure sensor.

18. CHECK EVAP PURGE LINE

Check EVAP purge line (pipe, rubber tube, fuel tank and EVAP canister) for cracks or improper connection. Refer to EC-31, "Description".

OK or NG

OK >> GO TO 19.
NG >> Repair or reconnect the hose.

19. CLEAN EVAP PURGE LINE

Clean EVAP purge line (pipe and rubber tube) using air blower.

>> GO TO 20.

20. CHECK EVAP/ORVR LINE

Check EVAP/ORVR line between EVAP canister and fuel tank for clogging, kink, looseness and improper connection. For location, refer to EC-38.

OK or NG

OK >> GO TO 21.
NG >> Repair or replace hoses and tubes.

21. CHECK RECIRCULATION LINE

Check recirculation line between filler neck tube and fuel tank for clogging, kink, cracks, looseness and improper connection.

OK or NG

OK >> GO TO 22.
NG >> Repair or replace hose, tube or filler neck tube.

22. CHECK REFUELING EVAP VAPOR CUT VALVE

Refer to EC-40, "Component Inspection".

OK or NG

OK >> GO TO 23.
NG >> Replace refueling EVAP vapor cut valve with fuel tank.

23. CHECK FUEL LEVEL SENSOR

Refer to FL-5.

OK or NG

OK >> GO TO 24.
NG >> Replace fuel level sensor unit.

24. CHECK INTERMITTENT INCIDENT

Refer to EC-136.

>> **INSPECTION END**

DTC P0460 FUEL LEVEL SENSOR

Component Description

INFOID:0000000001702885

The fuel level sensor (3) is mounted in the fuel level sensor unit. The sensor detects a fuel level in the fuel tank and transmits a signal to the combination meter. The combination meter sends the fuel level sensor signal to the ECM through CAN communication line.
It consists of two parts, one is mechanical float and the other is variable resistor. Fuel level sensor output voltage changes depending on the movement of the fuel mechanical float.

- Fuel level sensor unit and fuel pump (1)
- Fuel pressure regulator (2)
- Fuel tank temperature sensor (4)

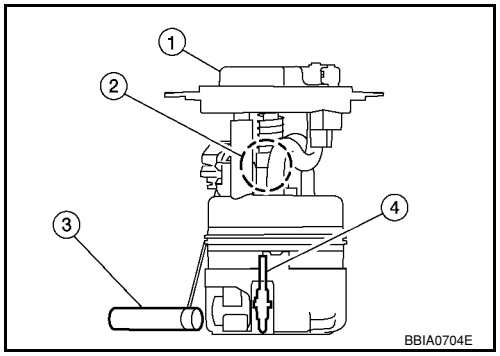

On Board Diagnosis Logic

INFOID:0000000001702886

NOTE:

- **If DTC P0460 is displayed with DTC U1000, U1001, first perform the trouble diagnosis for DTC U1000, U1001. Refer to EC-143.**
- **If DTC P0460 is displayed with DTC U1010, first perform the trouble diagnosis for DTC U1010. Refer to EC-145.**
- When the vehicle is parked, naturally the fuel level in the fuel tank is stable. It means that output signal of the fuel level sensor does not change. If ECM senses sloshing signal from the sensor, fuel level sensor malfunction is detected.

DTC No.	Trouble diagnosis name	DTC detecting condition	Possible cause
P0460 0460	Fuel level sensor circuit noise	Even though the vehicle is parked, a signal being varied is sent from the fuel level sensor to ECM.	• Harness or connectors (CAN communication line is open or shorted) • Harness or connectors (Fuel level sensor circuit is open or shorted) • Combination meter • Fuel level sensor

DTC Confirmation Procedure

INFOID:0000000001702887

NOTE:
If DTC Confirmation Procedure has been previously conducted, always turn ignition switch OFF and wait at least 10 seconds before conducting the next test.

WITH CONSULT-II

1. Turn ignition switch ON.
2. Select “DATA MONITOR” mode with CONSULT-II.
3. Start engine and wait maximum of 2 consecutive minutes.
4. If 1st trip DTC is detected, go to EC-386, "Diagnosis Procedure".

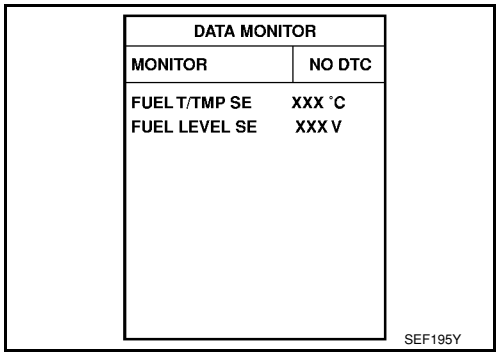

WITH GST

Follow the procedure “WITH CONSULT-II” above.

Diagnosis Procedure

INFOID:0000000001702888

1. CHECK FUEL GAUGE OPERATION

Refer to DI-11, "Self-Diagnosis Mode of Combination Meter".

OK or NG

OK >> GO TO 2.
NG >> Follow the instruction of DI-11, "Self-Diagnosis Mode of Combination Meter".

2. CHECK FUEL LEVEL SENSOR AND CIRCUIT

Refer to DI-17, "Fuel Level Sensor Signal Inspection".

OK or NG

OK >> GO TO 3.
NG >> Repair or replace malfunctioning parts.

3. CHECK INTERMITTENT INCIDENT

Refer to EC-136.

>> **INSPECTION END**

Removal and Installation

INFOID:0000000001702889

FUEL LEVEL SENSOR

Refer to FL-5.

DTC P0461 FUEL LEVEL SENSOR

Component Description

INFOID:0000000001702890

The fuel level sensor (3) is mounted in the fuel level sensor unit. The sensor detects a fuel level in the fuel tank and transmits a signal to the combination meter. The combination meter sends the fuel level sensor signal to the ECM through CAN communication line.
It consists of two parts, one is mechanical float and the other is variable resistor. Fuel level sensor output voltage changes depending on the movement of the fuel mechanical float.

- Fuel level sensor unit and fuel pump (1)
- Fuel pressure regulator (2)
- Fuel tank temperature sensor (4)

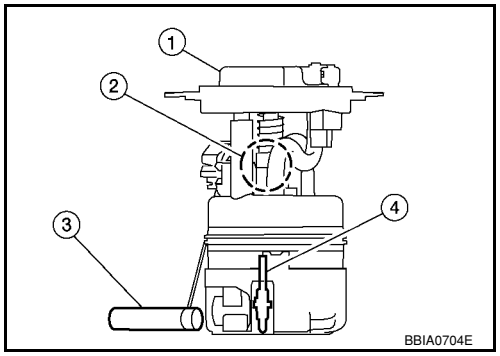

On Board Diagnosis Logic

INFOID:0000000001702891

NOTE:

- **If DTC P0461 is displayed with DTC U1000, U1001, first perform the trouble diagnosis for DTC U1000, U1001. Refer to EC-143.**
- **If DTC P0461 is displayed with DTC U1010, first perform the trouble diagnosis for DTC U1010. Refer to EC-145.**
- This diagnosis detects the fuel gauge malfunction of the gauge not moving even after a long distance has been driven.Driving long distances naturally affect fuel gauge level.

DTC No.	Trouble diagnosis name	DTC detecting condition	Possible cause
P0461 0461	Fuel level sensor circuit range/performance	The output signal of the fuel level sensor does not change within the specified range even though the vehicle has been driven a long distance.	• Harness or connectors (CAN communication line is open or shorted) • Harness or connectors (Fuel level sensor circuit is open or shorted) • Combination meter • Fuel level sensor

Overall Function Check

INFOID:0000000001702892

Use this procedure to check the overall function of the fuel level sensor function. During this check, a 1st trip DTC might not be confirmed.

WARNING:
When performing following procedure, be sure to observe the handling of the fuel.
Refer to FL-9.
TESTING CONDITION:
Before starting overall function check, preparation of draining fuel and refilling fuel is required.

WITH CONSULT-II

NOTE:
Start from step 10, if it is possible to confirm that the fuel cannot be drained by 30 ℓ (7-7/8 US gal, 6-5/8 Imp gal) in advance.

1. Prepare a fuel container and a spare hose.
2. Release fuel pressure from fuel line, refer to EC-78, "Fuel Pressure Check".
3. Remove the fuel feed hose on the fuel level sensor unit.
4. Connect a spare fuel hose where the fuel feed hose was removed.

5. Turn ignition switch OFF and wait at least 10 seconds then turn ON.
6. Select “FUEL LEVEL SE” in “DATA MONITOR” mode with CONSULT-II.
7. Check “FUEL LEVEL SE” output voltage and note it.
8. Select “FUEL PUMP RELAY” in “ACTIVE TEST” mode with CONSULT-II.
9. Touch “ON” and drain fuel approximately 30 ℓ (7-7/8 US gal, 6-5/8 Imp gal) and stop it.
10. Check “FUEL LEVEL SE” output voltage and note it.
11. Fill fuel into the fuel tank for 30 ℓ (7-7/8 US gal, 6-5/8 Imp gal).
12. Check “FUEL LEVEL SE” output voltage and note it.
13. Confirm whether the voltage changes more than 0.03V during step 7 to 10 and 10 to 12.
    If NG, go to EC-388, "Diagnosis Procedure".

DATA MONITOR	
MONITOR	NO DTC
FUEL T/TMP SE	XXX °C
FUEL LEVEL SE	XXX V

SEF195Y

WITH GST

NOTE:

Start from step 8, if it is possible to confirm that the fuel cannot be drained by 30 ℓ (7-7/8 US gal, 6-5/8 Imp gal) in advance.

1. Prepare a fuel container and a spare hose.
2. Release fuel pressure from fuel line, refer to EC-78, "Fuel Pressure Check".
3. Remove the fuel feed hose on the fuel level sensor unit.
4. Connect a spare fuel hose where the fuel feed hose was removed.
5. Turn ignition switch ON.
6. Drain fuel by 30 ℓ (7-7/8 US gal, 6-5/8 Imp gal) from the fuel tank using proper equipment.
7. Confirm that the fuel gauge indication varies.
8. Fill fuel into the fuel tank for 30 ℓ (7-7/8 US gal, 6-5/8 Imp gal).
9. Confirm that the fuel gauge indication varies.
10. If NG, go to EC-388, "Diagnosis Procedure".

Diagnosis Procedure

INFOID:0000000001702893

1. CHECK FUEL GAUGE OPERATION

Refer to DI-11, "Self-Diagnosis Mode of Combination Meter".

OK or NG

OK >> GO TO 2.
NG >> Follow the instruction of DI-11, "Self-Diagnosis Mode of Combination Meter".

2. CHECK FUEL LEVEL SENSOR AND CIRCUIT

Refer to DI-17, "Fuel Level Sensor Signal Inspection".

OK or NG

OK >> GO TO 3.
NG >> Repair or replace malfunctioning parts.

3. CHECK INTERMITTENT INCIDENT

Refer to EC-136.

>> **INSPECTION END**

Removal and Installation

INFOID:0000000001702894

FUEL LEVEL SENSOR

Refer to FL-5.

DTC P0462, P0463 FUEL LEVEL SENSOR

Component Description

INFOID:0000000001702895

The fuel level sensor (3) is mounted in the fuel level sensor unit. The sensor detects a fuel level in the fuel tank and transmits a signal to the combination meter. The combination meter. sends the fuel level sensor signal to the ECM through CAN communication line.
It consists of two parts, one is mechanical float and the other is variable resistor. Fuel level sensor output voltage changes depending on the movement of the fuel mechanical float.

- Fuel level sensor unit and fuel pump (1)
- Fuel pressure regulator (2)
- Fuel tank temperature sensor (4)

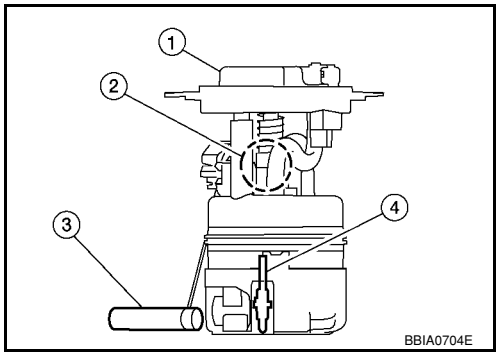

On Board Diagnosis Logic

INFOID:0000000001702896

NOTE:

- **If DTC P0462 or P0463 is displayed with DTC U1000, U1001, first perform the trouble diagnosis for DTC U1000, U1001. Refer to EC-143.**
- **If DTC P0462 or P0463 is displayed with DTC U1010, first perform the trouble diagnosis for DTC U1010. Refer to EC-145.**
- ECM receives two signals from the fuel level sensor circuit.One is fuel level sensor power supply circuit, and the other is fuel level sensor ground circuit.This diagnosis indicates the former, to detect open or short circuit malfunction.

DTC No.	Trouble diagnosis name	DTC detecting condition	Possible cause
P0462 0462	Fuel level sensor circuit low input	An excessively low voltage from the sensor is sent to ECM.	• Harness or connectors (CAN communication line is open or shorted) • Harness or connectors (Fuel level sensor circuit is open or shorted) • Combination meter • Fuel level sensor
P0463 0463	Fuel level sensor circuit high input	An excessively high voltage from the sensor is sent to ECM.	

DTC Confirmation Procedure

INFOID:0000000001702897

NOTE:
If DTC Confirmation Procedure has been previously conducted, always turn ignition switch OFF and wait at least 10 seconds before conducting the next test.
TESTING CONDITION:
Before performing the following procedure, confirm that battery voltage is more than 11V at ignition switch ON.

WITH CONSULT-II

1. Turn ignition switch ON.
2. Select “DATA MONITOR” mode with CONSULT-II.
3. Wait at least 5 seconds.
4. If 1st trip DTC is detected, go to EC-390, "Diagnosis Procedure".

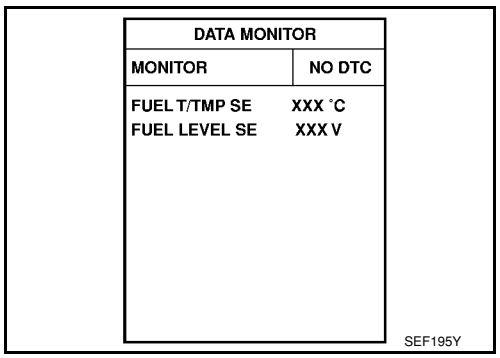

WITH GST

Follow the procedure “WITH CONSULT-II” above.

Diagnosis Procedure

INFOID:0000000001702898

1. CHECK FUEL GAUGE OPERATION

Refer to DI-11, "Self-Diagnosis Mode of Combination Meter".

OK or NG

OK >> GO TO 2.
NG >> Follow the instruction of DI-11, "Self-Diagnosis Mode of Combination Meter".

2. CHECK FUEL LEVEL SENSOR AND CIRCUIT

Refer to DI-17, "Fuel Level Sensor Signal Inspection".

OK or NG

OK >> GO TO 3.
NG >> Repair or replace malfunctioning parts.

3. CHECK INTERMITTENT INCIDENT

Refer to EC-136.

>> **INSPECTION END**

Removal and Installation

INFOID:0000000001702899

FUEL LEVEL SENSOR

Refer to FL-5.

DTC P0500 VSS

Description

INFOID:0000000001702900

NOTE:
- **If DTC P0500 is displayed with DTC U1000 or U1001, first perform the trouble diagnosis for DTC U1000, U1001. Refer to EC-143.**
- **If DTC P0500 is displayed with DTC U1010, first perform the trouble diagnosis for DTC U1010. Refer to EC-145.**

The vehicle speed signal is sent to the combination meter from “ABS actuator and electric unit (control unit)” through CAN communication line. The combination meter then sends a signal to the ECM through CAN communication line.

On Board Diagnosis Logic

INFOID:0000000001702901

DTC No.	Trouble diagnosis name	DTC detecting condition	Possible cause
P0500 0500	Vehicle speed sensor	The almost 0 km/h (0 MPH) signal from vehicle speed sensor is sent to ECM even when vehicle is being driven.	• Harness or connectors (CAN communication line is open or shorted.) • Harness or connectors (Vehicle speed signal circuit is open or shorted) • ABS actuator and electric unit (control unit) • Wheel sensor • Combination meter

FAIL-SAFE MODE

When the malfunction is detected, ECM enters fail-safe mode.

Detected item	Engine operating condition in fail-safe mode
Vehicle speed sensor	When the fail-safe system for vehicle speed sensor is activated, the cooling fan operates (High) while engine is running.

DTC Confirmation Procedure

INFOID:0000000001702902

CAUTION:
Always drive vehicle at a safe speed.
NOTE:
If DTC Confirmation Procedure has been previously conducted, always turn ignition switch OFF and wait at least 10 seconds before conducting the next test.
TESTING CONDITION:
Steps 1 and 2 may be conducted with the drive wheels lifted in the shop or by driving the vehicle. If a road test is expected to be easier, it is unnecessary to lift the vehicle.

WITH CONSULT-II

1. Start engine.
2. Read “VHCL SPEED SE” in “DATA MONITOR” mode with CONSULT-II. The vehicle speed on CONSULT-II should exceed 10 km/h (6 MPH) when rotating wheels with suitable gear position.
   If NG, go to EC-392, "Diagnosis Procedure".
   If OK, go to following step.
3. Select “DATA MONITOR” mode with CONSULT-II.

DATA MONITOR	
MONITOR	NO DTC
ENG SPEED	XXX rpm
COOLAN TEMP/S	XXX °C
B/FUEL SCHDL	XXX msec
PW/ST SIGNAL	OFF
VHCL SPEED SE	XXX km/h

SEF196Y

4. Warm engine up to normal operating temperature.
5. Maintain the following conditions for at least 60 consecutive seconds.

ENG SPEED	More than 1,600 rpm
COOLAN TEMP/S	More than 70°C (158°F)
B/FUEL SCHDL	6.0 - 31.8 msec
Shift lever	Suitable position
PW/ST SIGNAL	OFF

6. If 1st trip DTC is detected, go to EC-392, "Diagnosis Procedure".

Overall Function Check

INFOID:0000000001702903

Use this procedure to check the overall function of the vehicle speed signal circuit. During this check, a 1st trip DTC might not be confirmed.

WITH GST

1. Lift up drive wheels.
2. Start engine.
3. Read vehicle speed signal in Service $01 with GST.
   The vehicle speed signal on GST should be able to exceed 10 km/h (6 MPH) when rotating wheels with suitable gear position.
4. If NG, go to EC-392, "Diagnosis Procedure".

Diagnosis Procedure

INFOID:0000000001702904

1. CHECK DTC WITH “ABS ACTUATOR AND ELECTRIC UNIT (CONTROL UNIT)”

Refer to BRC-8.

OK or NG

OK >> GO TO 2.
NG >> Repair or replace.

2. CHECK COMBINATION METER

Refer to DI-4.

>> **INSPECTION END**

DTC P0506 ISC SYSTEM

Description

INFOID:0000000001702905

NOTE:
If DTC P0506 is displayed with other DTC, first perform the trouble diagnosis for the other DTC.
The ECM controls the engine idle speed to a specified level through the fine adjustment of the air, which is let into the intake manifold, by operating the electric throttle control actuator. The operating of the throttle valve is varied to allow for optimum control of the engine idling speed. The ECM calculates the actual engine speed from signals of crankshaft position sensor (POS) and camshaft position sensor (PHASE).
The ECM controls the electric throttle control actuator so that the engine speed coincides with the target value memorized in the ECM. The target engine speed is the lowest speed at which the engine can operate steadily. The optimum value stored in the ECM is determined by taking into consideration various engine conditions, such as during warming up, deceleration, and engine load (air conditioner, power steering and cooling fan operation, etc.).

On Board Diagnosis Logic

INFOID:0000000001702906

DTC No.	Trouble diagnosis name	DTC detecting condition	Possible cause
P0506 0506	Idle speed control system RPM lower than expected	The idle speed is less than the target idle speed by 100 rpm or more.	• Electric throttle control actuator • Intake air leak

DTC Confirmation Procedure

INFOID:0000000001702907

NOTE:
- If DTC Confirmation Procedure has been previously conducted, always turn ignition switch OFF and wait at least 10 seconds before conducting the next test.
- **If the target idle speed is out of the specified value, perform EC-76, "Idle Air Volume Learning", before conducting DTC Confirmation Procedure. For the target idle speed, refer to the EC-548.**

TESTING CONDITION:
- **Before performing the following procedure, confirm that battery voltage is more than 11V at idle.**
- **Always perform the test at a temperature above –10°C (14°F).**

WITH CONSULT-II

1. Open engine hood.
2. Start engine and warm it up to normal operating temperature.
3. Turn ignition switch OFF and wait at least 10 seconds.
4. Turn ignition switch ON again and select “DATA MONITOR” mode with CONSULT-II.
5. Start engine and run it for at least 1 minute at idle speed.
6. If 1st trip DTC is detected, go to EC-393, "Diagnosis Procedure".

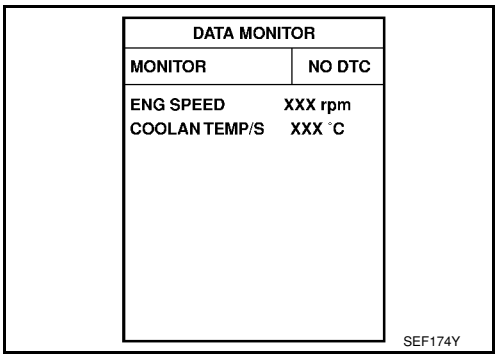

WITH GST

Follow the procedure “WITH CONSULT-II” above.

Diagnosis Procedure

INFOID:0000000001702908

1. CHECK INTAKE AIR LEAK

1. Start engine and let it idle.
2. Listen for an intake air leak after the mass air flow sensor.

OK or NG

OK >> GO TO 2.
NG >> Discover air leak location and repair.

2. REPLACE ECM

1. Stop engine.
2. Replace ECM.
3. Perform initialization of NVIS (NATS) system and registration of all NVIS (NATS) ignition key IDs.
   Refer to BL-211, "ECM Re-communicating Function".
4. Perform EC-75, "VIN Registration".
5. Perform EC-76, "Accelerator Pedal Released Position Learning".
6. Perform EC-76, "Throttle Valve Closed Position Learning".
7. Perform EC-76, "Idle Air Volume Learning".

>> **INSPECTION END**

DTC P0507 ISC SYSTEM

Description

INFOID:0000000001702909

NOTE:
If DTC P0507 is displayed with other DTC, first perform the trouble diagnosis for the other DTC.
The ECM controls the engine idle speed to a specified level through the fine adjustment of the air, which is let into the intake manifold, by operating the electric throttle control actuator. The operating of the throttle valve is varied to allow for optimum control of the engine idling speed. The ECM calculates the actual engine speed from signals of camshaft position sensor (POS) and camshaft position sensor (PHASE).
The ECM controls the electric throttle control actuator so that the engine speed coincides with the target value memorized in the ECM. The target engine speed is the lowest speed at which the engine can operate steadily. The optimum value stored in the ECM is determined by taking into consideration various engine conditions, such as during warming up, deceleration, and engine load (air conditioner, power steering and cooling fan operation, etc.).

On Board Diagnosis Logic

INFOID:0000000001702910

DTC No.	Trouble diagnosis name	DTC detecting condition	Possible cause
P0507 0507	Idle speed control system RPM higher than expected	The idle speed is more than the target idle speed by 200 rpm or more.	• Electric throttle control actuator • Intake air leak • PCV system

DTC Confirmation Procedure

INFOID:0000000001702911

NOTE:
- If DTC Confirmation Procedure has been previously conducted, always turn ignition switch OFF and wait at least 10 seconds before conducting the next test.
- **If the target idle speed is out of the specified value, perform EC-76, "Idle Air Volume Learning", before conducting DTC Confirmation Procedure. For the target idle speed, refer to the EC-548.**

TESTING CONDITION:
- **Before performing the following procedure, confirm that battery voltage is more than 11V at idle.**
- **Always perform the test at a temperature above –10°C (14°F).**

WITH CONSULT-II

1. Open engine hood.
2. Start engine and warm it up to normal operating temperature.
3. Turn ignition switch OFF and wait at least 10 seconds.
4. Turn ignition switch ON again and select “DATA MONITOR” mode with CONSULT-II.
5. Start engine and run it for at least 1 minute at idle speed.
6. If 1st trip DTC is detected, go to EC-395, "Diagnosis Procedure".

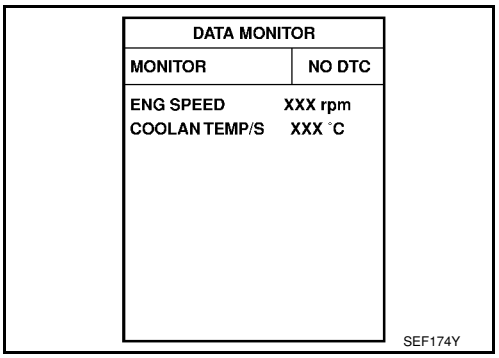

WITH GST

Follow the procedure “WITH CONSULT-II” above.

Diagnosis Procedure

INFOID:0000000001702912

1. CHECK PCV HOSE CONNECTION

Confirm that PCV hose is connected correctly.

OK or NG

OK >> GO TO 2.
NG >> Repair or replace.

2. CHECK INTAKE AIR LEAK

1. Start engine and let it idle.
2. Listen for an intake air leak after the mass air flow sensor.

OK or NG

OK >> GO TO 3.
NG >> Discover air leak location and repair.

3. REPLACE ECM

1. Stop engine.
2. Replace ECM.
3. Perform initialization of NVIS (NATS) system and registration of all NVIS (NATS) ignition key IDs.
   Refer to BL-211, "ECM Re-communicating Function".
4. Perform EC-75, "VIN Registration".
5. Perform EC-76, "Accelerator Pedal Released Position Learning".
6. Perform EC-76, "Throttle Valve Closed Position Learning".
7. Perform EC-76, "Idle Air Volume Learning".

>> **INSPECTION END**

DTC P0605 ECM

Component Description

INFOID:0000000001702913

The ECM consists of a microcomputer and connectors for signal input and output and for power supply. The ECM controls the engine.

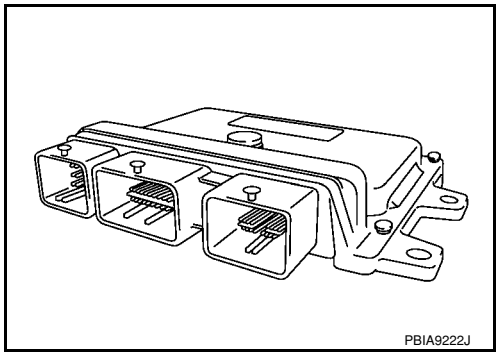

On Board Diagnosis Logic

INFOID:0000000001702914

This self-diagnosis has one or two trip detection logic.

DTC No.	Trouble diagnosis name	DTC detecting condition		Possible cause
P0605 0605	Engine control module	A)	ECM calculation function is malfunctioning.	• ECM
		B)	ECM EEP-ROM system is malfunctioning.	
		C)	ECM self shut-off function is malfunctioning.	

FAIL-SAFE MODE

ECM enters fail-safe mode when malfunction A is detected.

Detected items	Engine operation condition in fail-safe mode
Malfunction A	• ECM stops the electric throttle control actuator control, throttle valve is maintained at a fixed opening (approx. 5 degrees) by the return spring. • ECM deactivates ASCD operation.

DTC Confirmation Procedure

INFOID:0000000001702915

Perform PROCEDURE FOR MALFUNCTION A first. If the 1st trip DTC cannot be confirmed, perform PROCEDURE FOR MALFUNCTION B. If there is no malfunction on PROCEDURE FOR MALFUNCTION B, perform PROCEDURE FOR MALFUNCTION C.

NOTE:

If DTC Confirmation Procedure has been previously conducted, always turn ignition switch OFF and wait at least 10 seconds before conducting the next test.

PROCEDURE FOR MALFUNCTION A

With CONSULT-II

1. Turn ignition switch ON.
2. Select “DATA MONITOR” mode with CONSULT-II.
3. If 1st trip DTC is detected, go to EC-398, "Diagnosis Procedure".

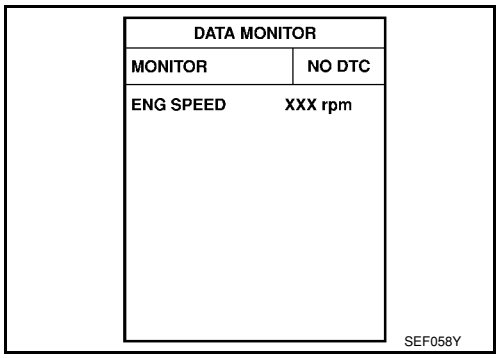

With GST

Follow the procedure “With CONSULT-II” above.

PROCEDURE FOR MALFUNCTION B

With CONSULT-II

1. Turn ignition switch ON and wait at least 1 second.
2. Select “DATA MONITOR” mode with CONSULT-II.
3. Turn ignition switch OFF, wait at least 10 seconds and then turn ON.
4. If 1st trip DTC is detected, go to EC-398, "Diagnosis Procedure".

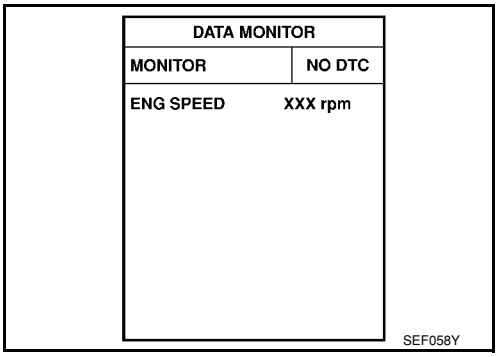

With GST

Follow the procedure “With CONSULT-II” above.

PROCEDURE FOR MALFUNCTION C

With CONSULT-II

1. Turn ignition switch ON and wait at least 1 second.
2. Select “DATA MONITOR” mode with CONSULT-II.
3. Turn ignition switch OFF, wait at least 10 seconds and then turn ON.
4. Repeat step 3 for 32 times.
5. If 1st trip DTC is detected, go to EC-398, "Diagnosis Procedure".

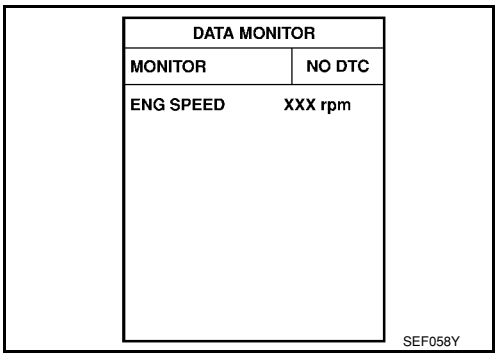

With GST

Follow the procedure “With CONSULT-II” above.

Diagnosis Procedure

INFOID:0000000001702916

1. INSPECTION START

With CONSULT-II

1. Turn ignition switch ON.
2. Select “SELF DIAG RESULTS” mode with CONSULT-II.
3. Touch “ERASE”.
4. **Perform DTC Confirmation Procedure.**
   See EC-397, "DTC Confirmation Procedure".
5. Is the 1st trip DTC P0605 displayed again?

With GST

1. Turn ignition switch ON.
2. Select Service $04 with GST.
3. **Perform DTC Confirmation Procedure.**
   See EC-397, "DTC Confirmation Procedure".
4. Is the 1st trip DTC P0605 displayed again?

Yes or No

Yes >> GO TO 2.
No >> **INSPECTION END**

2. REPLACE ECM

1. Replace ECM.
2. Perform initialization of NVIS(NATS) system and registration of all NVIS(NATS) ignition key IDs.
   Refer to BL-211, "ECM Re-communicating Function".
3. Perform EC-75, "VIN Registration".
4. Perform EC-76, "Accelerator Pedal Released Position Learning".
5. Perform EC-76, "Throttle Valve Closed Position Learning".
6. Perform EC-76, "Idle Air Volume Learning".

>> **INSPECTION END**

DTC P0643 SENSOR POWER SUPPLY

On Board Diagnosis Logic

INFOID:0000000001702917

This self-diagnosis has the one trip detection logic.

DTC No.	Trouble diagnosis name	DTC detecting condition	Possible cause
P0643 0643	Sensor power supply circuit short	ECM detects a voltage of power source for sensor is excessively low or high.	• Harness or connectors (APP sensor 1 circuit is shorted.) (Throttle position sensor circuit is shorted.) [Camshaft position sensor (PHASE) circuit is shorted.] • Accelerator pedal position sensor • Throttle position sensor • Camshaft position sensor (PHASE)

FAIL-SAFE MODE

When the malfunction is detected, ECM enters fail-safe mode and the MIL lights up.

Engine operation condition in fail-safe mode
ECM stops the electric throttle control actuator control, throttle valve is maintained at a fixed opening (approx. 5 degrees) by the return spring.

DTC Confirmation Procedure

INFOID:0000000001702918

NOTE:
If DTC Confirmation Procedure has been previously conducted, always turn ignition switch OFF and wait at least 10 seconds before conducting the next test.
TESTING CONDITION:
Before performing the following procedure, confirm that battery voltage is more than 8V at idle.

WITH CONSULT-II

1. Turn ignition switch ON.
2. Select “DATA MONITOR” mode with CONSULT-II.
3. Start engine and let it idle for 1 second.
4. If DTC is detected, go to EC-402, "Diagnosis Procedure".

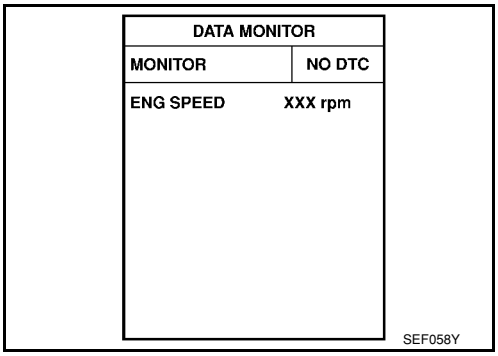

WITH GST

Follow the procedure “WITH CONSULT-II” above.

Wiring Diagram

INFOID:0000000001702919

EC-SEN/PW-01

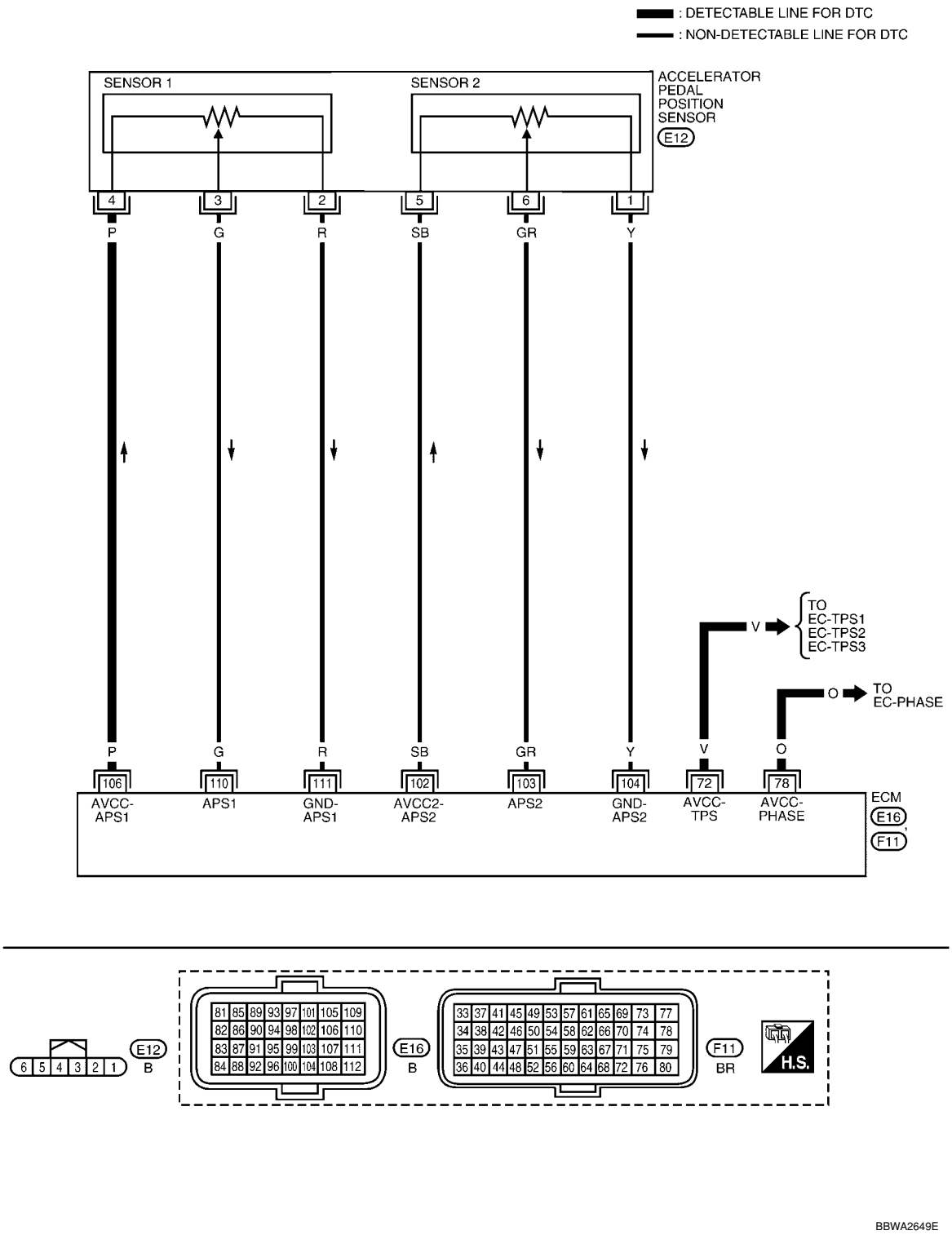

Specification data are reference values and are measured between each terminal and ground.

CAUTION:

Do not use ECM ground terminals when measuring input/output voltage. Doing so may result in damage to the ECM's transistor. Use a ground other than ECM terminals, such as the ground.

TERMINAL NO.	WIRE COLOR	ITEM	CONDITION	DATA (DC Voltage)
72	V	Sensor power supply (Throttle position sensor)	**[Ignition switch: ON]**	Approximately 5V
78	O	Sensor power supply [Camshaft position sensor (PHASE)]	**[Ignition switch: ON]**	Approximately 5V
102	SB	Sensor power supply (APP sensor 2)	**[Ignition switch: ON]**	Approximately 5V
103	GR	Accelerator pedal position sensor 2	**[Ignition switch: ON]** • Engine stopped • Accelerator pedal: Fully released	0.3 - 0.6V
			[Ignition switch: ON] • Engine stopped • Accelerator pedal: Fully depressed	1.95 - 2.4V
104	Y	Sensor ground (APP sensor 2)	**[Engine is running]** • **Warm-up condition** • Idle speed	Approximately 0V
106	P	Sensor power supply (APP sensor 1)	**[Ignition switch: ON]**	Approximately 5V
110	G	Accelerator pedal position sensor 1	**[Ignition switch: ON]** • Engine stopped • Accelerator pedal: Fully released	0.6 - 0.9V
			[Ignition switch: ON] • Engine stopped • Accelerator pedal: Fully depressed	3.9 - 4.7V
111	R	Sensor ground (APP sensor 1)	**[Engine is running]** • **Warm-up condition** • Idle speed	Approximately 0V

Diagnosis Procedure

INFOID:0000000001702920

1. CHECK GROUND CONNECTIONS

1. Turn ignition switch OFF.
2. Loosen and retighten ground screws on the body.
   Refer to EC-142, "Ground Inspection".

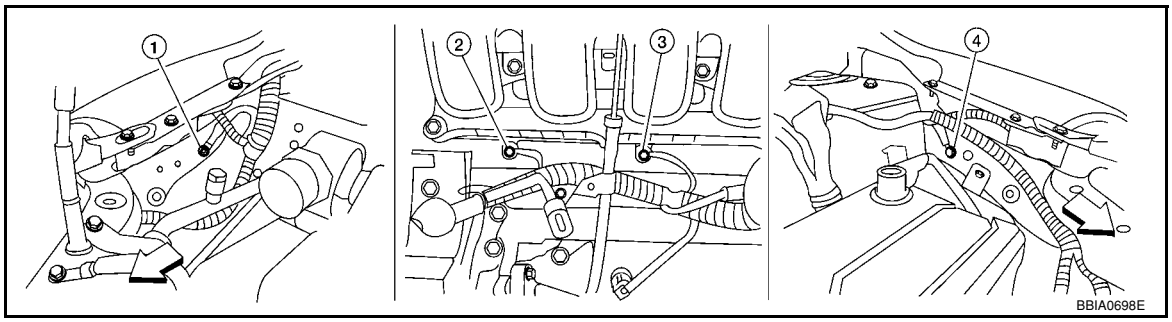

⇦: Vehicle front

1. Body ground E24
2. Engine ground F9
3. Engine ground F16
4. Body ground E15

OK or NG

OK >> GO TO 2.
NG >> Repair or replace ground connections.

2. CHECK ACCELERATOR PEDAL POSITION SENSOR 1 POWER SUPPLY CIRCUIT

1. Disconnect accelerator pedal position (APP) sensor (1) harness connector.
2. Turn ignition switch ON.

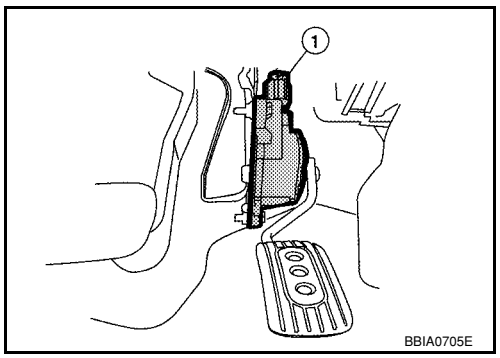

3. Check voltage between APP sensor terminal 4 and ground with CONSULT-II or tester.

Voltage: Approximately 5V

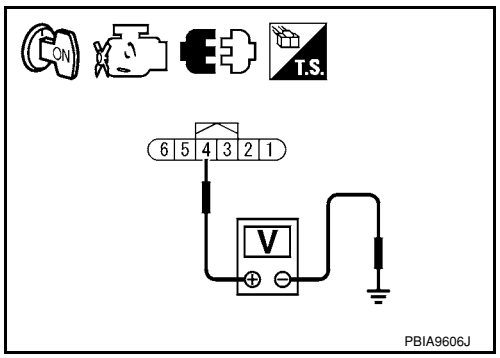

OK or NG

OK >> GO TO 8.
NG >> GO TO 3.

3. CHECK ACCELERATOR PEDAL POSITION SENSOR 1 POWER SUPPLY CIRCUIT-II

1. Turn ignition switch OFF.
2. Disconnect ECM harness connector.
3. Check harness continuity between APP sensor terminal 4 and ECM terminal 106. Refer to Wiring Diagram.

Continuity should exist.

OK or NG

OK >> GO TO 4.
NG >> Repair open circuit or short to ground or short to power in harness or connectors.

4. CHECK SENSOR POWER SUPPLY CIRCUITS

Check harness for short to power and short to ground, between the following terminals.

ECM terminal	Sensor terminal	Reference Wiring Diagram
72	Throttle position sensor terminal 1	EC-489, "Wiring Diagram"
78	Camshaft position sensor (PHASE) terminal 1	EC-304, "Wiring Diagram"
106	APP sensor terminal 4	EC-401, "Wiring Diagram"

OK or NG

OK >> GO TO 5.
NG >> Repair short to ground or short to power in harness or connectors.

5. CHECK CAMSHAFT POSITION SENSOR (PHASE)

Refer to EC-307, "Component Inspection".

OK or NG

OK >> GO TO 6.
NG >> Replace camshaft position sensor (PHASE).

6. CHECK THROTTLE POSITION SENSOR

Refer to EC-492, "Component Inspection".

OK or NG

OK >> GO TO 8.
NG >> GO TO 7.

7. REPLACE ELECTRIC THROTTLE CONTROL ACTUATOR

1. Replace the electric throttle control actuator.
2. Perform EC-76, "Throttle Valve Closed Position Learning".
3. Perform EC-76, "Idle Air Volume Learning".

>> **INSPECTION END**

8. CHECK APP SENSOR

Refer to EC-499, "Component Inspection".

OK or NG

OK >> GO TO 9.
NG >> GO TO 8.

9. REPLACE ACCELERATOR PEDAL ASSEMBLY

1. Replace accelerator pedal assembly.
2. Perform EC-76, "Accelerator Pedal Released Position Learning".
3. Perform EC-76, "Throttle Valve Closed Position Learning".
4. Perform EC-76, "Idle Air Volume Learning".

>> **INSPECTION END**

10. CHECK INTERMITTENT INCIDENT

Refer to EC-136.

>> **INSPECTION END**

DTC P0850 PNP SWITCH

Component Description

INFOID:0000000001702921

When the shift lever position is P or N (A/T, CVT), Neutral (M/T), park/neutral position (PNP) switch is ON. ECM detects the position because the continuity of the line (the ON signal) exists.

CONSULT-II Reference Value in Data Monitor Mode

INFOID:0000000001702922

Specification data are reference values.

MONITOR ITEM	CONDITION		SPECIFICATION
P/N POSI SW	• Ignition switch: ON	Shift lever: P or N (A/T, CVT), Neutral (M/T)	ON
		Shift lever: Except above	OFF

On Board Diagnosis Logic

INFOID:0000000001702923

DTC No.	Trouble diagnosis name	DTC detecting condition	Possible cause
P0850 0850	Park/neutral position switch	The signal of the park/neutral position (PNP) switch is not changed in the process of engine starting and driving.	• Harness or connectors [Park/neutral position (PNP) switch circuit is open or shorted.] • Park/neutral position (PNP) switch • TCM (CVT models)

DTC Confirmation Procedure

INFOID:0000000001702924

CAUTION:
Always drive vehicle at a safe speed.
NOTE:
If DTC Confirmation Procedure has been previously conducted, always turn ignition switch OFF and wait at least 10 seconds before conducting the next test.

WITH CONSULT-II

1. Turn ignition switch ON.
2. Select “P/N POSI SW” in “DATA MONITOR” mode with CONSULT-II. Then check the “P/N POSI SW” signal under the following conditions.

Position (Shift lever)	Known-good signal
N or P position (A/T, CVT) Neutral position (M/T)	ON
Except above	OFF

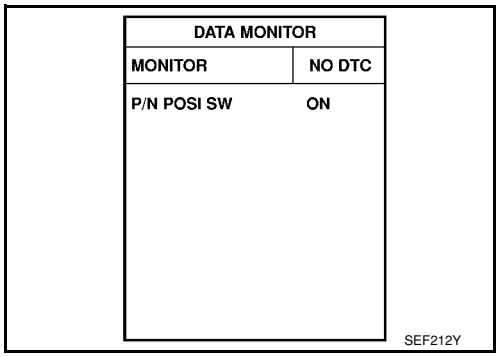

If NG, go to EC-408, "Diagnosis Procedure".
If OK, go to following step.

3. Select “DATA MONITOR” mode with CONSULT-II.
4. Start engine and warm it up to normal operating temperature.

5. Maintain the following conditions for at least 60 consecutive seconds.

ENG SPEED	More than 1,100 rpm
COOLAN TEMP/S	More than 70°C (158°F)
B/FUEL SCHDL	3.5 - 31.8 msec
VHCL SPEED SE	More than 64km/h (29 MPH)
Shift lever	Suitable position

6. If 1st trip DTC is detected, go to EC-408, "Diagnosis Procedure".

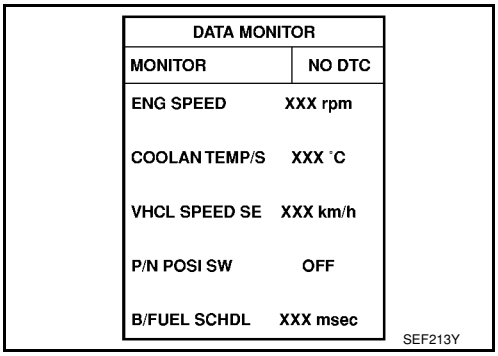

Overall Function Check

INFOID:0000000001702925

Use this procedure to check the overall function of the park/neutral position (PNP) switch circuit. During this check, a 1st trip DTC might not be confirmed.

WITH GST

1. Turn ignition switch ON.
2. Check voltage between ECM terminal 69 (PNP switch signal) and ground under the following conditions.

Condition (Shift lever)	Voltage V (Known-good data)
P or N position (A/T, CVT) Neutral position (M/T)	Approx. 0
Except above	BATTERY VOLTAGE (11 - 14V)

3. If NG, go to EC-408, "Diagnosis Procedure".

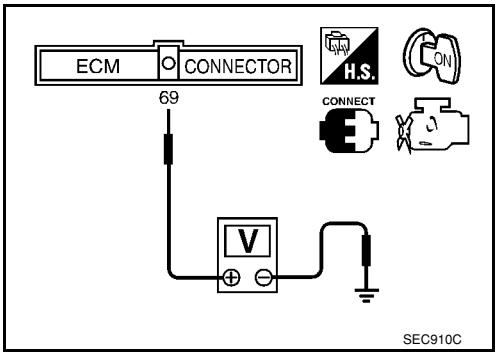

Wiring Diagram

INFOID:0000000001702926

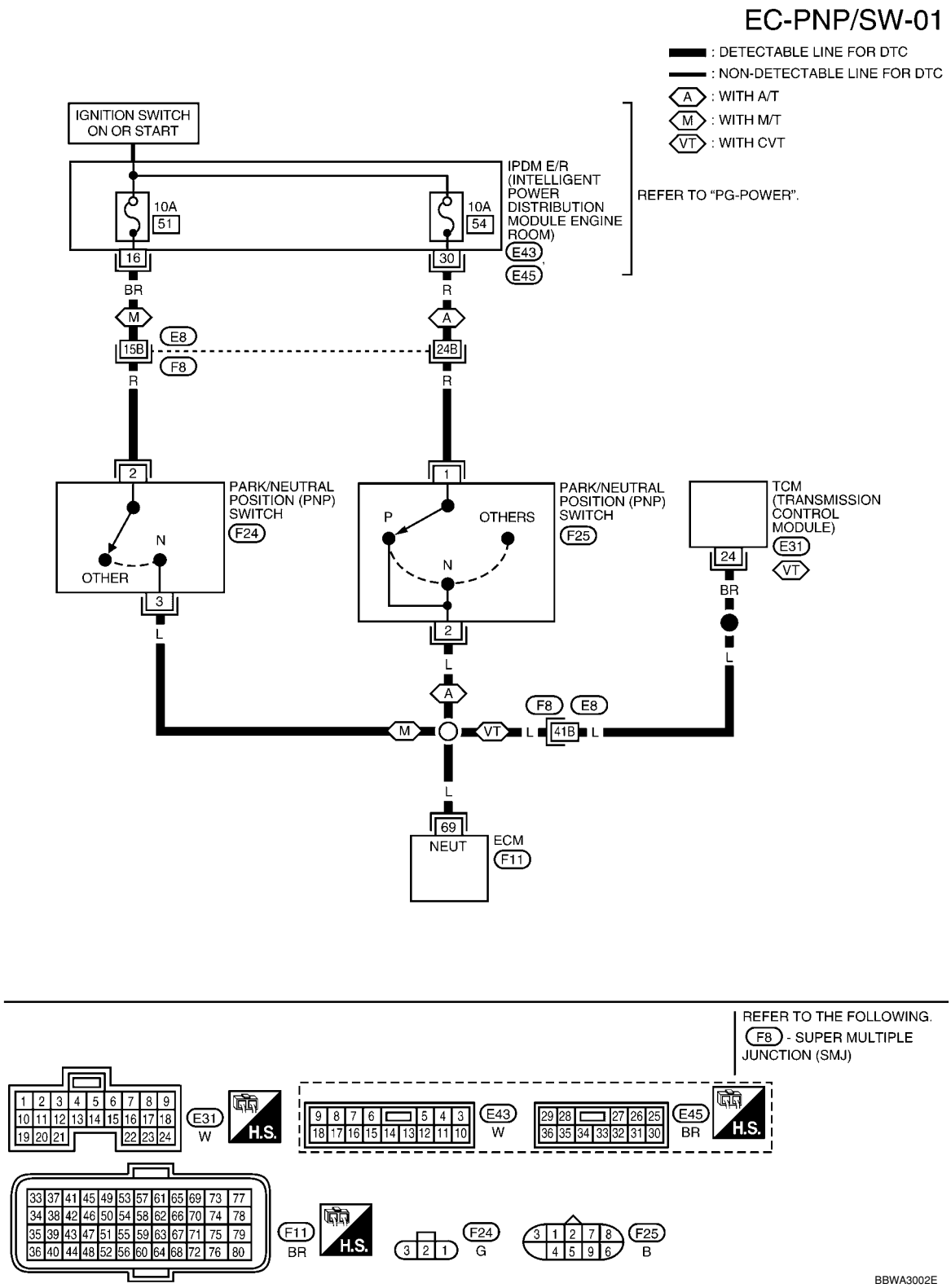

Specification data are reference values and are measured between each terminal and ground.

CAUTION:

Do not use ECM ground terminals when measuring input/output voltage. Doing so may result in damage to the ECM's transistor. Use a ground other than ECM terminals, such as the ground.

TERMINAL NO.	WIRE COLOR	ITEM	CONDITION	DATA (DC Voltage)
69	L	Park/neutral position (PNP) switch	**[Ignition switch: ON]** • Shift lever: P or N (A/T, CVT), Neutral (M/T)	BATTERY VOLTAGE (11 - 14V)
			[Ignition switch: ON] • Except above	Approximately 0V

Diagnosis Procedure

INFOID:0000000001702927

A/T MODELS

1.CHECK PNP SWITCH POWER SUPPLY CIRCUIT

1. Turn ignition switch OFF.
2. Disconnect PNP switch harness connector.
3. Turn ignition switch ON.
4. Check voltage between PNP switch terminal 1 and ground with CONSULT-II or tester.

Voltage: Battery voltage

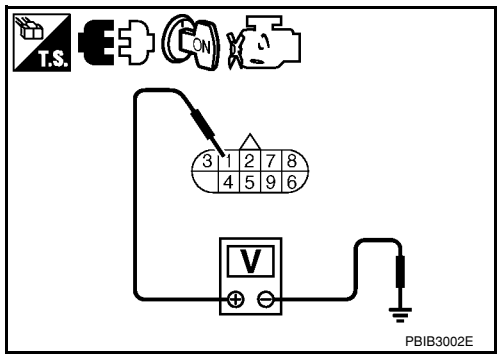

OK or NG

OK >> GO TO 3.
NG >> GO TO 2.

2.DETECT MALFUNCTIONING PART

Check the following.
- Harness connectors E8, F8
- Harness for open or short between PNP switch and fuse

>> Repair open circuit or short to ground or short to power in harness or connectors.

3.CHECK PNP SWITCH INPUT SIGNAL CIRCUIT FOR OPEN AND SHORT

1. Turn ignition switch OFF.
2. Disconnect ECM harness connector.
3. Check harness continuity between PNP switch terminal 2 and ECM terminal 69. Refer to Wiring Diagram.

Continuity should exist.

4. Also check harness for short to ground and short to power.

OK or NG

OK >> GO TO 4.
NG >> Repair open circuit or short to ground or short to power in harness or connectors.

4.CHECK PNP SWITCH

Refer to AT-90, "Component Inspection".

OK or NG

OK >> GO TO 5.
NG >> Replace PNP switch.

5.CHECK INTERMITTENT INCIDENT

Refer to EC-136.

>> **INSPECTION END**

M/T MODELS

1. CHECK PNP SWITCH POWER SUPPLY CIRCUIT

1. Turn ignition switch OFF.
2. Disconnect PNP switch harness connector.
3. Turn ignition switch ON.
4. Check voltage between PNP switch terminal 2 and ground with CONSULT-II or tester.

Voltage: Battery voltage

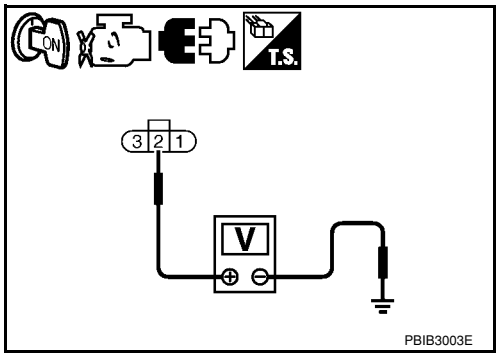

OK or NG

OK >> GO TO 3.
NG >> GO TO 2.

2. DETECT MALFUNCTIONING PART

Check the following.
- Harness connectors E8, F8
- Harness for open or short between PNP switch and fuse

>> Repair open circuit or short to ground or short to power in harness or connectors.

3. CHECK PNP SWITCH INPUT SIGNAL CIRCUIT FOR OPEN AND SHORT

1. Turn ignition switch OFF.
2. Disconnect ECM harness connector.
3. Check harness continuity between PNP switch terminal 3 and ECM terminal 69. Refer to Wiring Diagram.

Continuity should exist.

4. Also check harness for short to ground and short to power.

OK or NG

OK >> GO TO 4.
NG >> Repair open circuit or short to ground or short to power in harness or connectors.

4. CHECK PNP SWITCH

Refer to MT-12.

OK or NG

OK >> GO TO 5.
NG >> Replace PNP switch.

5. CHECK INTERMITTENT INCIDENT

Refer to EC-136.

>> **INSPECTION END**

CVT MODELS

1. CHECK DTC WITH TCM

Refer to AT-36, "OBD-II Diagnostic Trouble Code (DTC)".

OK or NG

OK >> GO TO 2.
NG >> Repair or replace.

2. CHECK STARTING SYSTEM

Turn ignition switch OFF, then turn it to START.
Does starter motor operate?

Yes or No

Yes >> GO TO 3.
No >> Refer to SC-8.

3. CHECK PNP SWITCH INPUT SIGNAL CIRCUIT FOR OPEN AND SHORT-I

1. Turn ignition switch OFF.
2. Disconnect ECM and TCM harness connectors.
3. Check harness continuity between TCM terminal 24 and ECM terminal 69.
   Refer to Wiring Diagram.

   Continuity should exist.

4. Also check harness for short to ground and short to power.

OK or NG

OK >> GO TO 5.
NG >> GO TO 4.

4. DETECT MALFUNCTIONING PART

Check the following.
- Harness connectors F8, E8
- Harness for open or short between TCM and ECM.

>> Repair open circuit or short to ground or short to power in harness or connectors.

5. CHECK INTERMITTENT INCIDENT

Refer to EC-136.

>> **INSPECTION END**

DTC P1148 CLOSED LOOP CONTROL

On Board Diagnosis Logic

INFOID:0000000001702928

This self-diagnosis has the one trip detection logic.

DTC No.	Trouble diagnosis name	DTC detecting condition	Possible cause
P1148 1148	Closed loop control function	The closed loop control function does not operate even when vehicle is driving in the specified condition.	• Harness or connectors [Air fuel ratio (A/F) sensor 1 circuit is open or shorted.] • Air fuel ratio (A/F) sensor 1 • Air fuel ratio (A/F) sensor 1 heater

NOTE:
DTC P1148 is displayed with another DTC for air fuel ratio (A/F) sensor 1.
Perform the trouble diagnosis for the corresponding DTC.

DTC P1217 ENGINE OVER TEMPERATURE

System Description

INFOID:0000000001702929

SYSTEM DESCRIPTION

NOTE:

- **If DTC P1217 is displayed with DTC U1000 or U1001, first perform the trouble diagnosis for DTC U1000, U1001. Refer to EC-143.**
- **If DTC P1217 is displayed with DTC U1010, first perform the trouble diagnosis for DTC U1010. Refer to EC-145.**

Cooling Fan Control

Sensor	Input Signal to ECM	ECM function	Actuator
Crankshaft position sensor (POS) Camshaft position sensor (PHASE)	Engine speed*1	Cooling fan control	IPDM E/R (Cooling fan relays)
Battery	Battery voltage*1		
Wheel sensor	Vehicle speed*2		
Engine coolant temperature sensor	Engine coolant temperature		
Air conditioner switch	Air conditioner ON signal*2		
Refrigerant pressure sensor	Refrigerant pressure		

*1: The ECM determines the start signal status by the signals of engine speed and battery voltage.

*2: This signal is sent to ECM through CAN communication line.

The ECM controls the cooling fan corresponding to the vehicle speed, engine coolant temperature, refrigerant pressure, and air conditioner ON signal. The control system has 3-step control [HIGH/LOW/OFF].

Cooling Fan Operation

Models with A/C

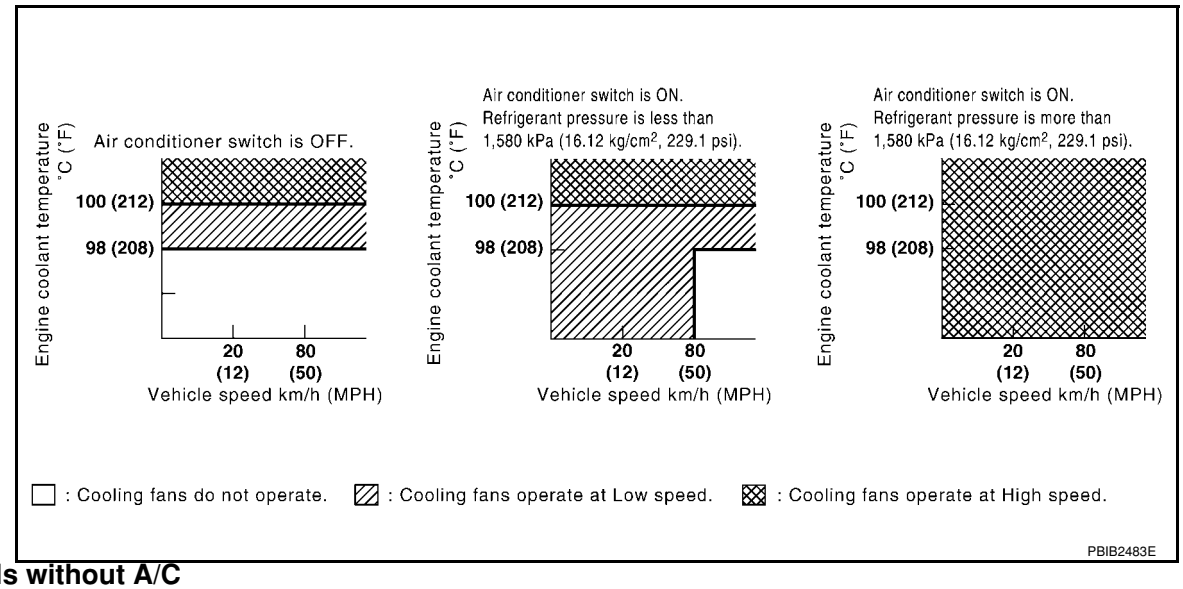

Models without A/C

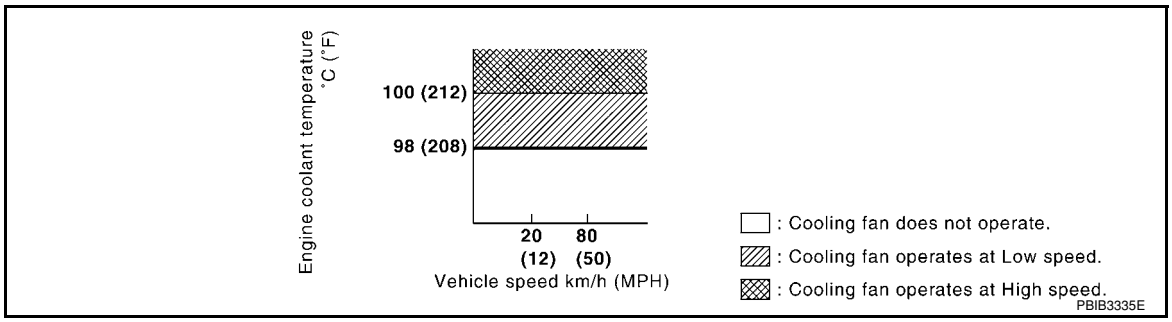

Cooling Fan Relay Operation

The ECM controls cooling fan relays in the IPDM E/R through CAN communication line.

Cooling fan speed	Cooling fan relay		
	1	2	3
Stop (OFF)	OFF	OFF	OFF
Low (LOW)	ON	OFF	OFF
High (HI)	OFF	ON	ON

CONSULT-II Reference Value in Data Monitor Mode

INFOID:0000000001702930

Specification data are reference values.

MONITOR ITEM	CONDITION		SPECIFICATION
AIR COND SIG	• Engine: After warming up, idle the engine	Air conditioner switch: OFF	OFF
		Air conditioner switch: ON (Compressor operates.)	ON
COOLING FAN	• Engine: After warming up, idle the engine • Air conditioner switch: OFF	Engine coolant temperature: 97°C (207°F) or less	OFF
		Engine coolant temperature: Between 98°C (208°F) and 99°C (210°F) or more	LOW
		Engine coolant temperature: 100°C (212°F) or more	HIGH

On Board Diagnosis Logic

INFOID:0000000001702931

If the cooling fan or another component in the cooling system malfunctions, engine coolant temperature will rise. When the engine coolant temperature reaches an abnormally high temperature condition, a malfunction is indicated.

This self-diagnosis has the one trip detection logic.

DTC No.	Trouble diagnosis name	DTC detecting condition	Possible cause
P1217 1217	Engine over temperature (Overheat)	• Cooling fan does not operate properly (Overheat). • Cooling fan system does not operate properly (Overheat). • Engine coolant was not added to the system using the proper filling method. • Engine coolant is not within the specified range.	• Harness or connectors (Cooling fan circuit is open or shorted.) • Cooling fan • IPDM E/R (Cooling fan relays) • Radiator hose • Radiator • Reservoir tank • Radiator cap • Water pump • Thermostat • Water control valve For more information, refer to EC-424, "Main 13 Causes of Overheating".

CAUTION:

When a malfunction is indicated, be sure to replace the coolant. Refer to CO-8, "Changing Engine Coolant". Also, replace the engine oil. Refer to LU-7, "Changing Engine Oil".

1. **Fill radiator with coolant up to specified level with a filling speed of 2 liters per minute. Be sure to use coolant with the proper mixture ratio. Refer to MA-11, "Anti-freeze Coolant Mixture Ratio".**
2. **After refilling coolant, run engine to ensure that no water-flow noise is emitted.**

Overall Function Check

INFOID:0000000001702932

Use this procedure to check the overall function of the cooling fan. During this check, a DTC might not be confirmed.

WARNING:

Never remove the radiator cap when the engine is hot. Serious burns could be caused by high pressure fluid escaping from the reservoir tank or the radiator.
Wrap a thick cloth around cap. Carefully remove the cap by turning it a quarter turn to allow built-up pressure to escape. Then turn the cap all the way off.

WITH CONSULT-II

1. Check the coolant level in the reservoir tank and radiator.
   Allow engine to cool before checking coolant level.
   If the coolant level in the reservoir tank and/or radiator is below the proper range, skip the following steps and go to EC-417, "Diagnosis Procedure" or EC-417, "Diagnosis Procedure".
2. Confirm whether customer filled the coolant or not. If customer filled the coolant, skip the following steps and go to EC-417, "Diagnosis Procedure" or EC-417, "Diagnosis Procedure".
3. Turn ignition switch ON.

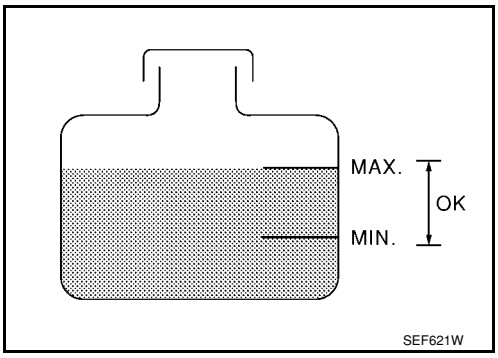

4. Perform “COOLING FAN” in “ACTIVE TEST” mode with CONSULT-II.
5. If the results are NG, go to EC-417, "Diagnosis Procedure" or EC-417, "Diagnosis Procedure".

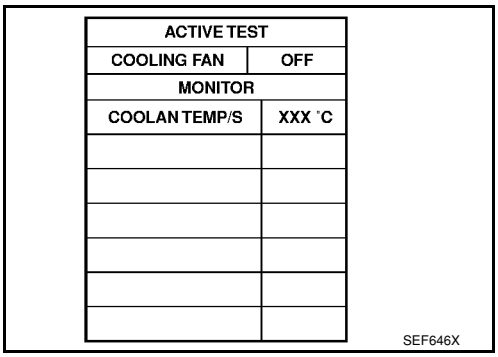

ACTIVE TEST	
COOLING FAN	OFF
MONITOR	
COOLAN TEMP/S	XXX °C

SEF646X

WITH GST

Models with A/C

1. Check the coolant level in the reservoir tank and radiator.
   Allow engine to cool before checking coolant level.
   If the coolant level in the reservoir tank and/or radiator is below the proper range, skip the following steps and go to EC-417, "Diagnosis Procedure".
2. Confirm whether customer filled the coolant or not. If customer filled the coolant, skip the following steps and go to EC-417, "Diagnosis Procedure".
3. Start engine.
   CAUTION:
   Be careful not to overheat engine.
4. Set temperature control switch to full cold position.
5. Turn air conditioner switch ON.
6. Turn blower fan switch ON.
7. Run engine at idle for a few minutes with air conditioner operating.
   CAUTION:
   Be careful not to overheat engine.

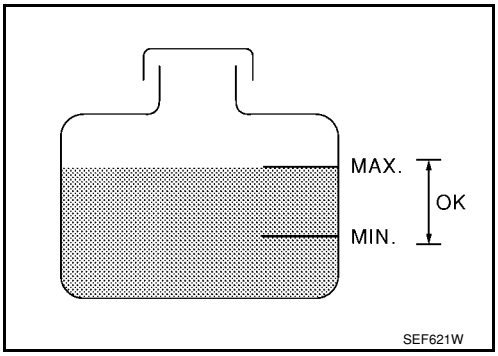

8. Make sure that cooling fans operates at low speed.
   If NG, go to EC-417, "Diagnosis Procedure".
   If OK, go to the following step.
9. Turn ignition switch OFF.
10. Turn air conditioner switch and blower fan switch OFF.
11. Disconnect engine coolant temperature sensor harness connector.
12. Connect 150Ω resistor to engine coolant temperature sensor harness connector.

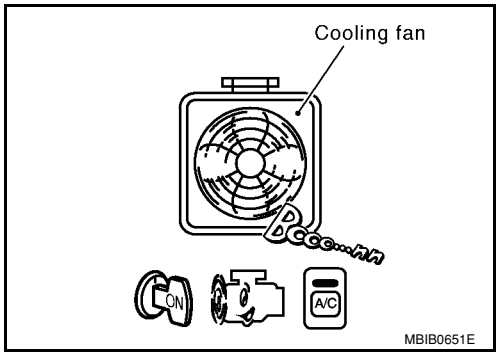

13. Restart engine and make sure that cooling fan operates at higher speed than low speed.
    CAUTION:
    Be careful not to overheat engine.
14. If NG, go to EC-417, "Diagnosis Procedure".

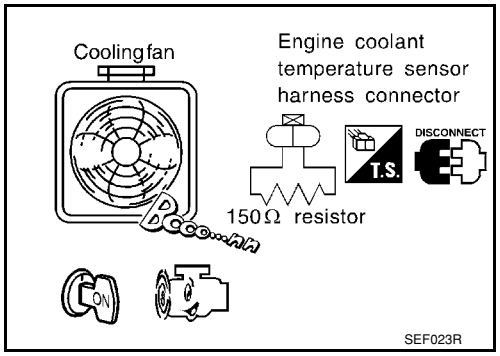

Models without A/C

1. Check the coolant level in the reservoir tank and radiator.
   Allow engine to cool before checking coolant level.
   If the coolant level in the reservoir tank and/or radiator is below the proper range, skip the following steps and go to EC-417, "Diagnosis Procedure".
2. Confirm whether customer filled the coolant or not. If customer filled the coolant, skip the following steps and go to EC-417, "Diagnosis Procedure".
3. Perform IPDM E/R auto active test and check cooling fan motor operation, refer to PG-19, "Auto Active Test".
4. Make sure that cooling fan operate at low speed.
   If NG, go to EC-417, "Diagnosis Procedure".
5. Turn ignition switch OFF.
6. Disconnect engine coolant temperature sensor harness connector.
7. Connect 150Ω resistor to engine coolant temperature sensor harness connector.
8. Start engine and make that cooling fan operates. Be careful not to overheat engine.
9. If NG, go to EC-417, "Diagnosis Procedure".

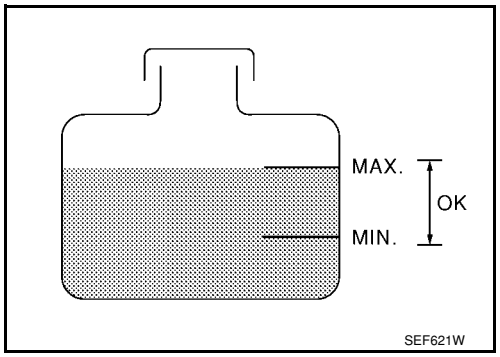

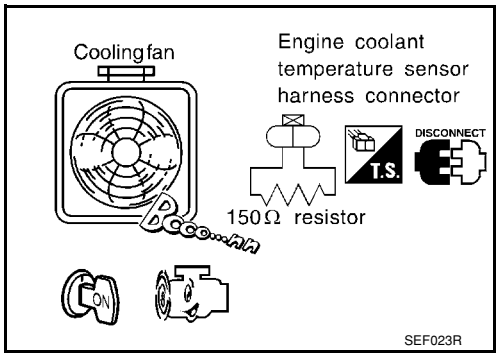

Wiring Diagram

INFOID:0000000001702933

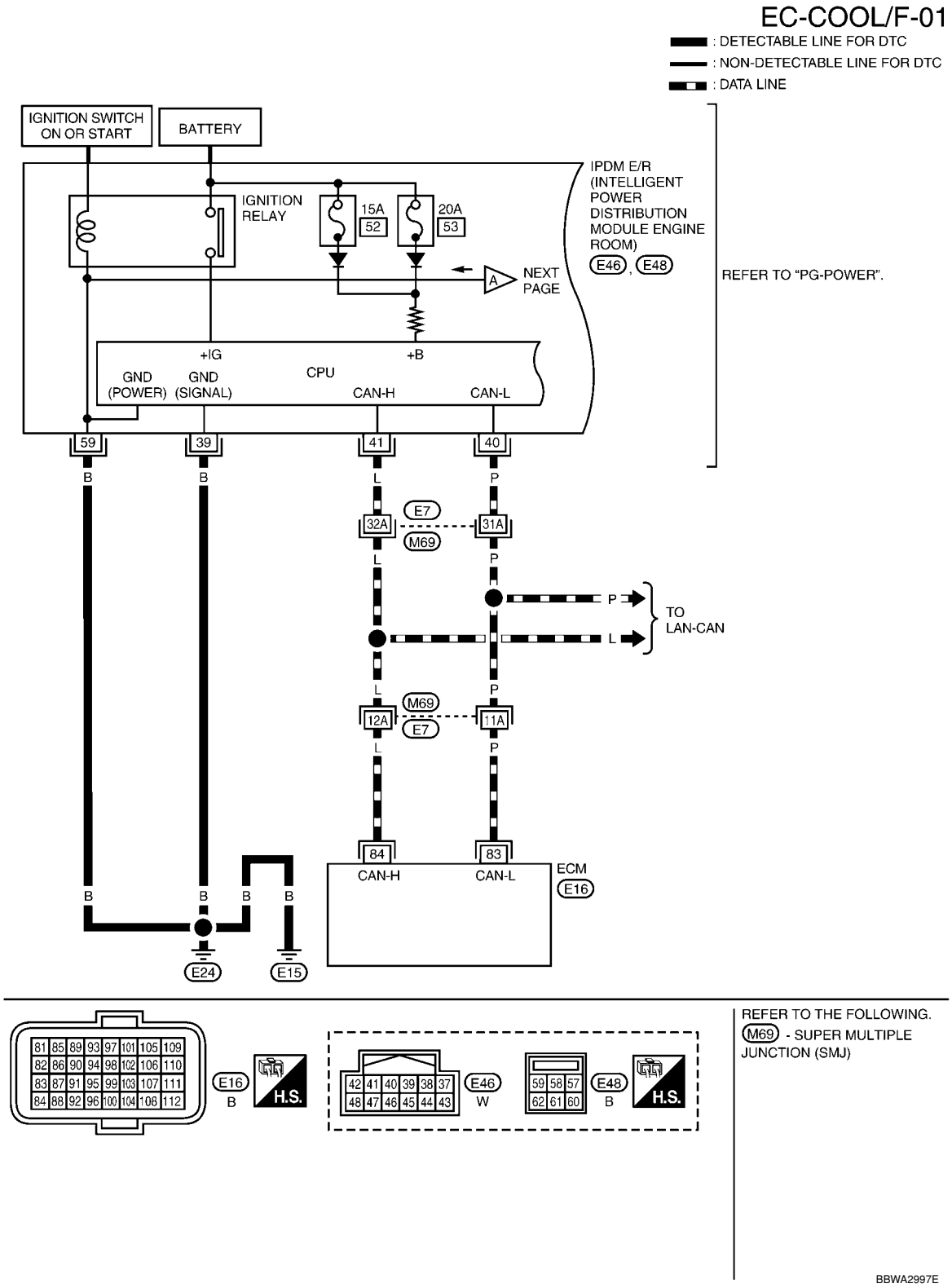

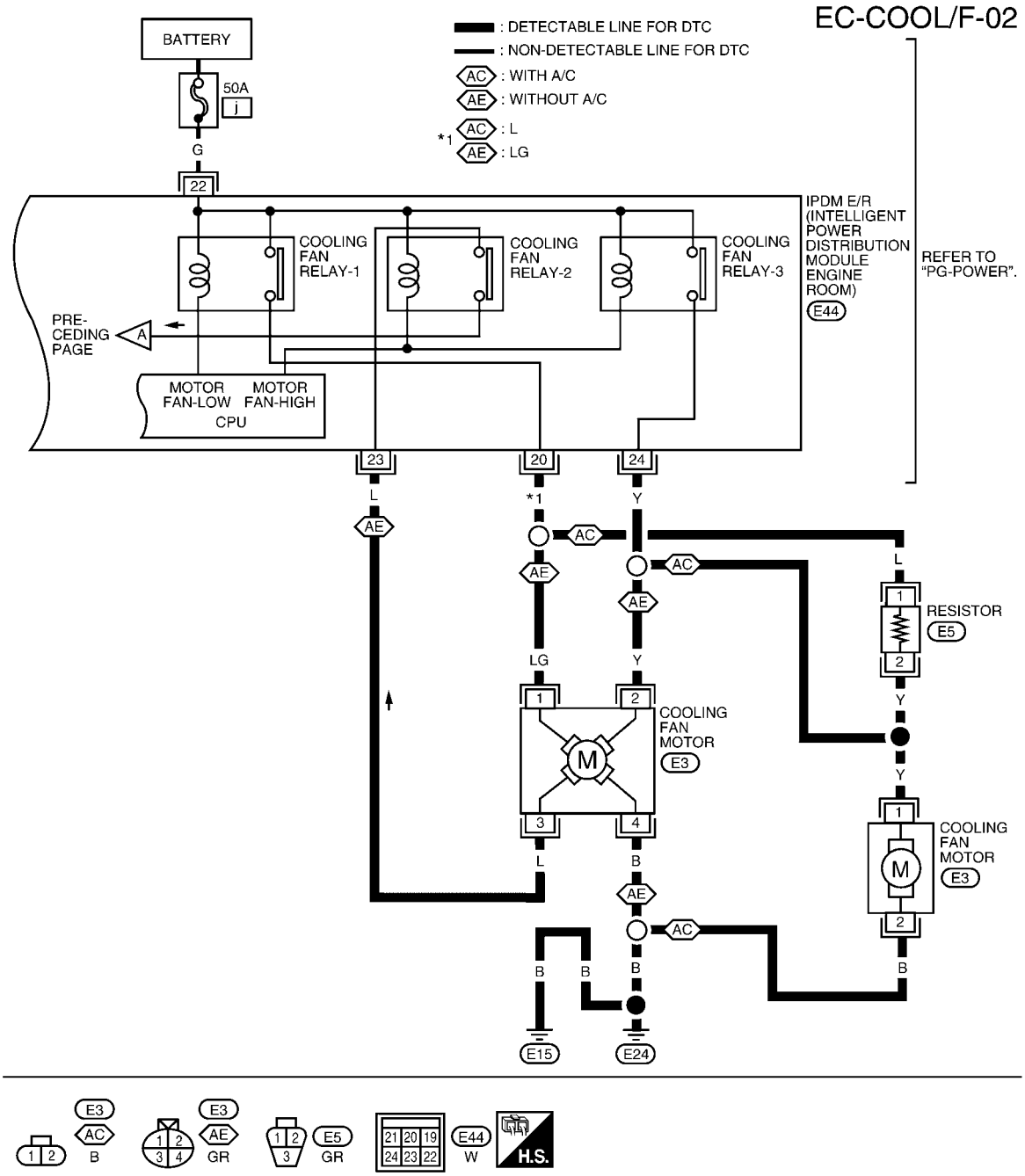

BBWA3001E

Diagnosis Procedure

INFOID:0000000001702934

PROCEDURE FOR MODELS WITH A/C

1. INSPECTION START

Do you have CONSULT-II?

Yes or No

Yes >> GO TO 2.

No >> GO TO 4.

2. CHECK COOLING FAN LOW SPEED OPERATION

With CONSULT-II

1. Turn ignition switch ON.
2. Perform “COOLING FAN” in “ACTIVE TEST” mode with CONSULT-II and touch “LOW” on the CONSULT-II screen.
3. Make sure that cooling fan operate at low speed.

OK or NG

OK >> GO TO 3.
NG >> Check cooling fan control circuit. (Go to "PROCEDURE A".)

ACTIVE TEST	
COOLING FAN	LOW
MONITOR	
COOLAN TEMP/S	XXX ˚C

SEF784Z

3. CHECK COOLING FAN HIGH SPEED OPERATION

With CONSULT-II

1. Touch “HIGH” on the CONSULT-II screen.
2. Make sure that cooling fan operate at higher speed than low speed.

OK or NG

OK >> GO TO 6.
NG >> Check cooling fan control circuit. (Go to "PROCEDURE A".)

ACTIVE TEST	
COOLING FAN	HIGH
MONITOR	
COOLAN TEMP/S	XXX ˚C

SEF785Z

4. CHECK COOLING FAN LOW SPEED OPERATION

Without CONSULT-II

1. Start engine and let it idle.
2. Turn air conditioner switch ON.
3. Turn blower fan switch ON.
4. Make sure that cooling fan operate at low speed.

OK or NG

OK >> GO TO 5.
NG >> Check cooling fan low speed control circuit. (Go to "PROCEDURE A".)

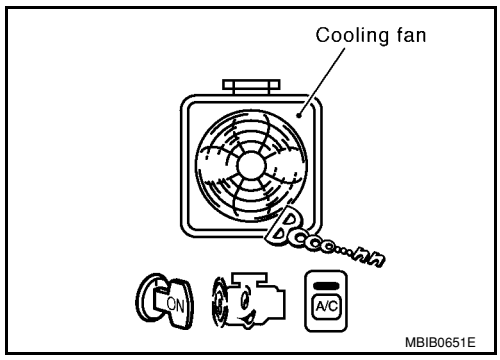

MBIB0651E

5. CHECK COOLING FAN HIGH SPEED OPERATION

Without CONSULT-II

1. Turn ignition switch OFF.
2. Turn air conditioner switch and blower fan switch OFF.
3. Disconnect engine coolant temperature sensor harness connector.
4. Connect 150Ω resistor to engine coolant temperature sensor harness connector.

5. Restart engine and make sure that cooling fan operate at higher speed than low speed.

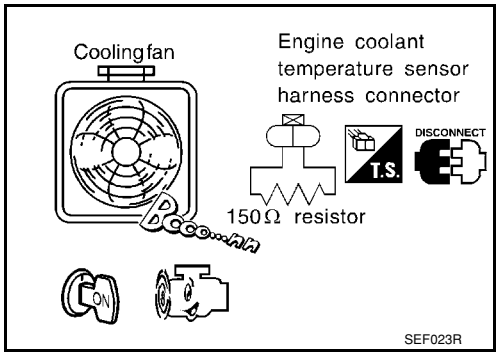

OK or NG

OK >> GO TO 6.
NG >> Check cooling fan high speed control circuit. (Go to "PROCEDURE A".)

6. CHECK COOLING SYSTEM FOR LEAK

Refer to CO-8.

OK or NG

OK >> GO TO 8.
NG >> GO TO 7.

7. DETECT MALFUNCTIONING PART

Check the following for leak.
- Hose
- Radiator
- Water pump (Refer to CO-16.)

>> Repair or replace.

8. CHECK RADIATOR CAP

Refer to CO-11.

OK or NG

OK >> GO TO 9.
NG >> Replace radiator cap.

9. CHECK COMPONENT PARTS

Check the following;.
- Thermostat. (Refer to CO-16.)
- Water control valve. (Refer to CO-19.)
- Engine coolant temperature sensor. (Refer to EC-191, "Component Inspection".)

OK or NG

OK >> GO TO 10.
NG >> Replace malfunctioning component.

10. CHECK MAIN 13 CAUSES

If the cause cannot be isolated, go to EC-424, "Main 13 Causes of Overheating".

>> **INSPECTION END**

PROCEDURE A

1. CHECK POWER SUPPLY CIRCUIT

1. Turn ignition switch OFF.
2. Disconnect IPDM E/R harness connector E44.

3. Check voltage between IPDM E/R terminal 22 and ground with CONSULT-II or tester.

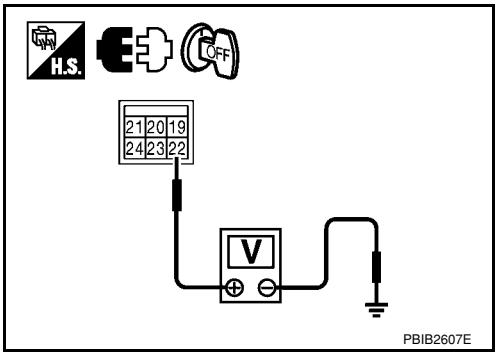

Voltage: Battery voltage

OK or NG

OK >> GO TO 3.
NG >> GO TO 2.

2. DETECT MALFUNCTIONING PART

Check the following.
- 50A fusible link
- Harness for open or short between IPDM E/R and battery

>> Repair open circuit or short to ground or short to power in harness or connectors.

3. CHECK COOLING FAN MOTOR CIRCUIT

1. Disconnect cooling fan motor harness connector (1).
- ⇦: Vehicle front
- Resistor (2)
2. Disconnect IPDM E/R harness connectors E46 and E48.
3. Check harness continuity between the following;
   cooling fan motor terminal 1 and IPDM E/R terminal 24,
   cooling fan motor terminal 2 and ground.
   Refer to wiring diagram.

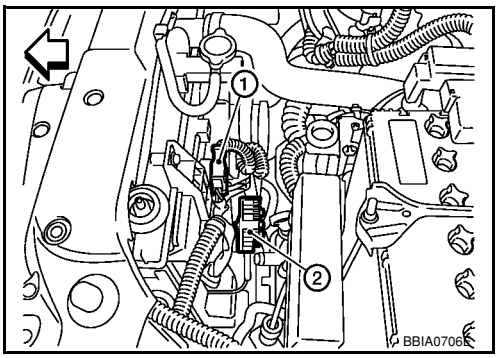

Continuity should exist.

4. Also check harness for short to ground and short to power.
5. Check harness continuity between IPDM E/R terminal 20 and cooling fan motor terminal 1.
   Refer to wiring diagram.

Continuity should exist.

6. Also check harness for short to ground and short to power.
7. Check harness continuity between IPDM E/R terminals 39, 59 and ground.
   Refer to Wiring Diagram.

Continuity should exist.

8. Also check harness for short to ground and short to power.

OK or NG

OK >> GO TO 5.
NG >> GO TO 4.

4. DETECT MALFUNCTIONING PART

Check the following.
- Harness for open or short between cooling fan motor and IPDM E/R
- Harness for open or short between cooling fan motor and ground
- Resistor E5

>> Repair open circuit or short to ground or short to power in harness or connectors.

5. CHECK COOLING FAN MOTOR

Refer to EC-424, "Component Inspection".

OK or NG

OK >> GO TO 6.
NG >> Replace cooling fan motor.

6. CHECK INTERMITTENT INCIDENT

Perform EC-136.

OK or NG

OK >> Replace IPDM E/R. Refer to PG-26, "Removal and Installation of IPDM E/R".
NG >> Repair or replace harness or connector.

PROCEDURE FOR MODELS WITHOUT A/C

1. INSPECTION START

Do you have CONSULT-II?

Yes or No

Yes >> GO TO 2.
No >> GO TO 4.

2. CHECK COOLING FAN LOW SPEED OPERATION

With CONSULT-II

1. Turn ignition switch ON.
2. Perform “COOLING FAN” in “ACTIVE TEST” mode with CONSULT-II and touch “LOW” on the CONSULT-II screen.
3. Make sure that cooling fan operate at low speed.

OK or NG

OK >> GO TO3.
NG >> Check cooling fan control circuit. (Go to "PROCEDURE B".)

ACTIVE TEST	
COOLING FAN	LOW
MONITOR	
COOLAN TEMP/S	XXX °C

SEF784Z

3. CHECK COOLING FAN HIGH SPEED OPERATION

With CONSULT-II

1. Touch “HIGH” on the CONSULT-II screen.
2. Make sure that cooling fan operates at higher speed than low speed.

OK or NG

OK >> GO TO 6.
NG >> Check cooling fan control circuit. (Go to "PROCEDURE A".)

ACTIVE TEST	
COOLING FAN	HIGH
MONITOR	
COOLAN TEMP/S	XXX °C

SEF785Z

4. CHECK COOLING FAN LOW SPEED OPERATION

Without CONSULT-II

1. Perform IPDM E/R auto active test and check cooling fan motor operation.
   Refer to PG-19, "Auto Active Test".
2. Make sure that cooling fan operate at low speed.

OK or NG

OK >> GO TO 5.
NG >> Check cooling fan speed control circuit. (Go to "PROCEDURE B".)

5. CHECK COOLING FAN HIGH SPEED OPERATION

Without CONSULT-II

1. Turn ignition switch OFF.

2. Disconnect engine coolant temperature sensor harness connector.
3. Connect 150Ω resistor to engine coolant temperature sensor harness connector.
4. Restart engine and make sure that cooling fan operates at higher speed than low speed.

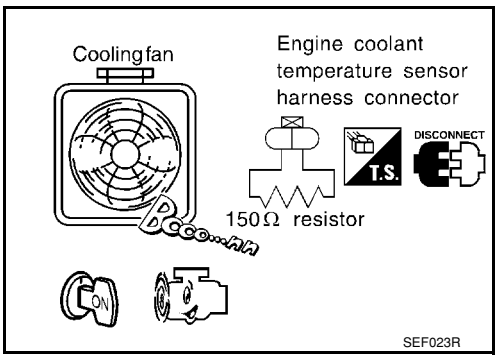

OK or NG

OK >> GO TO 6.
NG >> Check cooling fan high speed control circuit. (Go to "PROCEDURE A")

6. CHECK COOLING SYSTEM FOR LEAK

Refer to CO-8.

OK or NG

OK >> GO TO 8.
NG >> GO TO 7.

7. DETECT MALFUNCTIONING PART

Check the following for leak.
- Hose
- Radiator
- Water pump (Refer to CO-16.)

>> Repair or replace.

8. CHECK RADIATOR CAP

Refer to CO-11.

OK or NG

OK >> GO TO 9.
NG >> Replace radiator cap.

9. CHECK THERMOSTAT

Refer to CO-17.

OK or NG

OK >> GO TO 10.
NG >> Replace thermostat.

10. CHECK ENGINE COOLANT TEMPERATURE SENSOR

Refer to EC-191, "Component Inspection".

OK or NG

OK >> GO TO 11.
NG >> Replace engine coolant temperature sensor.

11. CHECK MAIN 13 CAUSES

If the cause cannot be isolated, go to EC-424, "Main 13 Causes of Overheating".

>> **INSPECTION END**

PROCEDURE B

1. CHECK POWER SUPPLY CIRCUIT

1. Turn ignition switch OFF.
2. Disconnect IPDM E/R harness connector E44.

3. Check voltage between IPDM E/R terminal 22 and ground with CONSULT-II or tester.

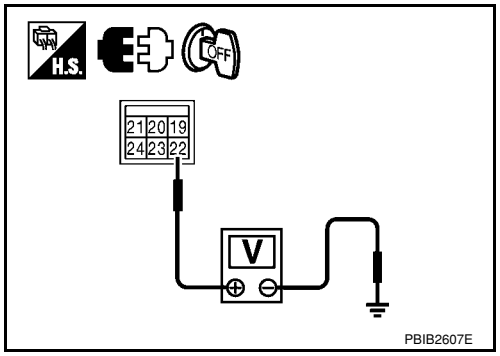

Voltage: Battery voltage

OK or NG

OK >> GO TO 3.
NG >> GO TO 2.

2. DETECT MALFUNCTIONING PART

Check the following.
- 50A fusible link
- Harness for open or short between IPDM E/R and battery

>> Repair open circuit or short to ground or short to power in harness or connectors.

3. CHECK COOLING FAN MOTOR CIRCUIT

1. Disconnect cooling fan motor harness connector (1).
- ⇦: Vehicle front
- Resistor (2)
2. Disconnect IPDM E/R harness connectors E46 and E48.
3. Check harness continuity between the following;
cooling fan motor terminal 1 and IPDM E/R terminal 20,
cooling fan motor terminal 4 and ground.
Refer to Wiring Diagram.

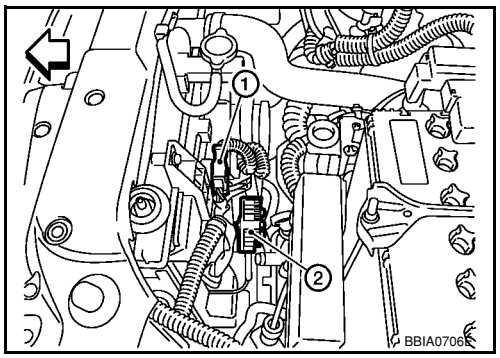

Continuity should exist.

4. Also check harness for short to ground and short to power.
5. Check harness continuity between the following;
cooling fan motor terminal 2 and IPDM E/R terminal 24,
cooling fan motor terminal 3 and IPDM E/R terminal 23.
Refer to Wiring Diagram.

Continuity should exist.

6. Also check harness for short to ground and short to power.
7. Check harness continuity between IPDM E/R terminals 39, 59 and ground.
Refer to Wiring Diagram.

Continuity should exist.

8. Also check harness for short to ground and short to power.

OK or NG

OK >> GO TO 5.
NG >> GO TO 4.

4. DETECT MALFUNCTIONING PART

Check the following.
- Harness for open or short between cooling fan motor and IPDM E/R
- Harness for open or short between cooling fan motor and ground

>> Repair open circuit or short to ground or short to power in harness or connectors.

5. CHECK COOLING FAN MOTOR

Refer to EC-424, "Component Inspection".

OK or NG

OK >> GO TO 6.
NG >> Replace cooling fan motor.

6. CHECK INTERMITTENT INCIDENT

Perform EC-136.

OK or NG

OK >> Replace IPDM E/R. Refer to PG-26, "Removal and Installation of IPDM E/R".
NG >> Repair or replace harness or connector.

Main 13 Causes of Overheating

INFOID:0000000001702935

Engine	Step	Inspection item	Equipment	Standard	Reference page
OFF	1	• Blocked radiator • Blocked condenser • Blocked radiator grille • Blocked bumper	• Visual	No blocking	—
	2	• Coolant mixture	• Coolant tester	50 - 50% coolant mixture	See MA-11, "Anti-freeze Coolant Mixture Ratio".
	3	• Coolant level	• Visual	Coolant up to MAX level in reservoir tank and radiator filler neck	See CO-8, "Inspection".
	4	• Radiator cap	• Pressure tester	59 - 98 kPa (0.6 - 1.0 kg/cm^2, 9 - 14 psi) (Limit)	See CO-13, "Checking Radiator Cap".
ON*2	5	• Coolant leaks	• Visual	No leaks	See CO-8, "Inspection".
ON*2	6	• Thermostat	• Touch the upper and lower radiator hoses	Both hoses should be hot	See CO-17, and CO-11
ON*1	7	• Cooling fan	• CONSULT-II	Operating	See trouble diagnosis for DTC P1217 (EC-417, "Diagnosis Procedure").
OFF	8	• Combustion gas leak	• Color checker chemical tester 4 Gas analyzer	Negative	—
ON*3	9	• Coolant temperature gauge	• Visual	Gauge less than 3/4 when driving	—
		• Coolant overflow to reservoir tank	• Visual	No overflow during driving and idling	See CO-8, "Changing Engine Coolant".
OFF*4	10	• Coolant return from reservoir tank to radiator	• Visual	Should be initial level in reservoir tank	See CO-8, "Inspection".
OFF	11	• Water control valve	• Remove and inspect the valve	Within the specified value	See CO-19, "Removal and Installation"
OFF	12	• Cylinder head	• Straight gauge feeler gauge	0.1 mm (0.004 in) Maximum distortion (warping)	See EM-62.
	13	• Cylinder block and pistons	• Visual	No scuffing on cylinder walls or piston	See EM-76.

*1: Turn the ignition switch ON.
*2: Engine running at 3,000 rpm for 10 minutes.
*3: Drive at 90 km/h (55 MPH) for 30 minutes and then let idle for 10 minutes.
*4: After 60 minutes of cool down time.
For more information, refer to CO-5.

Component Inspection

INFOID:0000000001702936

COOLING FAN MOTOR

Model with A/C

1. Disconnect cooling fan motor harness connectors.
2. Supply cooling fan motor terminals with battery voltage and check operation.

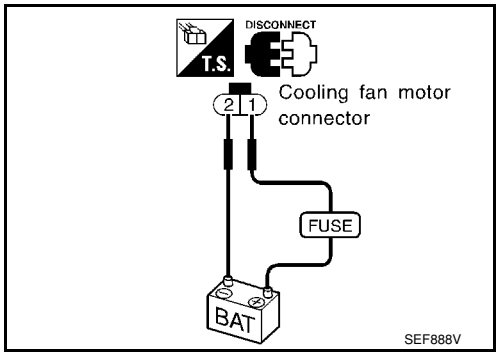

	Terminals	
	(+)	(-)
Cooling fan motor	1	2

Cooling fan motor should operate.
If NG, replace cooling fan motor.

Models without A/C

1. Disconnect cooling fan motor harness connectors.
2. Supply cooling fan motor terminals with battery voltage and check operation.

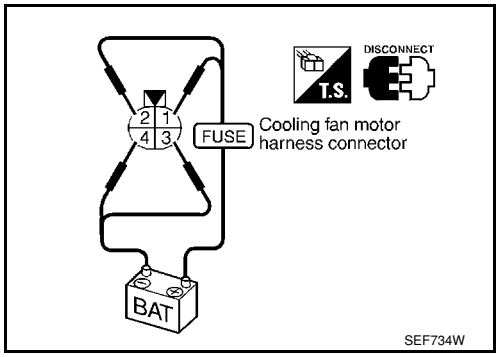

	Speed	terminals	
		(+)	(–)
Cooling fan motor	Low	1	4
		2	3
	High	1 and 2	3 and 4

Cooling fan motor should operate.
If NG, replace cooling fan motor.

DTC P1225 TP SENSOR

Component Description

INFOID:0000000001702937

Electric throttle control actuator consists of throttle control motor, throttle position sensor, etc. The throttle position sensor responds to the throttle valve movement.
The throttle position sensor has two sensors. These sensors are a kind of potentiometers which transform the throttle valve position into output voltage, and emit the voltage signal to the ECM. In addition, these sensors detect the opening and closing speed of the throttle valve and feed the voltage signals to the ECM. The ECM judges the current opening angle of the throttle valve from these signals and the ECM controls the throttle control motor to make the throttle valve opening angle properly in response to driving condition.

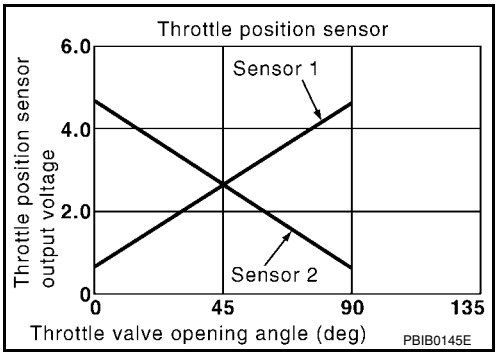

On Board Diagnosis Logic

INFOID:0000000001702938

The MIL will not light up for this diagnosis.

DTC No.	Trouble diagnosis name	DTC detecting condition	Possible cause
P1225 1225	Closed throttle position learning performance	Closed throttle position learning value is excessively low.	• Electric throttle control actuator (TP sensor 1 and 2)

DTC Confirmation Procedure

INFOID:0000000001702939

NOTE:
If DTC Confirmation Procedure has been previously conducted, always turn ignition switch OFF and wait at least 10 seconds before conducting the next test.
TESTING CONDITION:
Before performing the following procedure, confirm that battery voltage is more than 10V at idle.

WITH CONSULT-II

1. Turn ignition switch ON.
2. Select “DATA MONITOR” mode with CONSULT-II.
3. Turn ignition switch OFF and wait at least 10 seconds.
4. Turn ignition switch ON.
5. If 1st trip DTC is detected, go to EC-426, "Diagnosis Procedure".

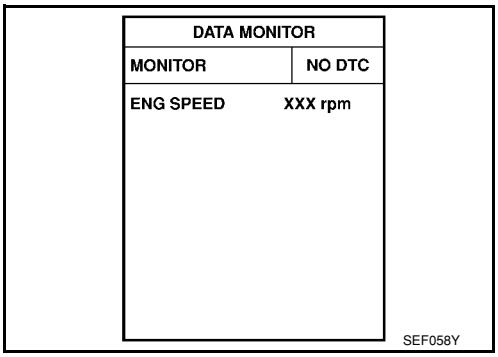

WITH GST

Follow the procedure “WITH CONSULT-II” above.

Diagnosis Procedure

INFOID:0000000001702940

1. CHECK ELECTRIC THROTTLE CONTROL ACTUATOR VISUALLY

1. Turn ignition switch OFF.
2. Remove the intake air duct.

3. Check if foreign matter is caught between the throttle valve (1) and the housing.

- ⇦: Vehicle front

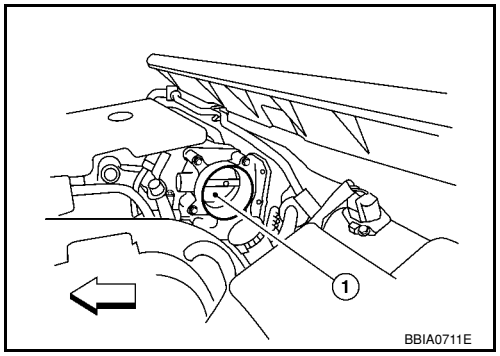

OK or NG

OK >> GO TO 2.
NG >> Remove the foreign matter and clean the electric throttle control actuator inside.

2. REPLACE ELECTRIC THROTTLE CONTROL ACTUATOR

1. Replace the electric throttle control actuator.
2. Perform EC-76, "Throttle Valve Closed Position Learning".
3. Perform EC-76, "Idle Air Volume Learning".

>> **INSPECTION END**

Removal and Installation

INFOID:0000000001702941

ELECTRIC THROTTLE CONTROL ACTUATOR

Refer to EM-18.

DTC P1226 TP SENSOR

Component Description

INFOID:0000000001702942

Electric throttle control actuator consists of throttle control motor, throttle position sensor, etc. The throttle position sensor responds to the throttle valve movement.
The throttle position sensor has two sensors. These sensors are a kind of potentiometers which transform the throttle valve position into output voltage, and emit the voltage signal to the ECM. In addition, these sensors detect the opening and closing speed of the throttle valve and feed the voltage signals to the ECM. The ECM judges the current opening angle of the throttle valve from these signals and the ECM controls the throttle control motor to make the throttle valve opening angle properly in response to driving condition.

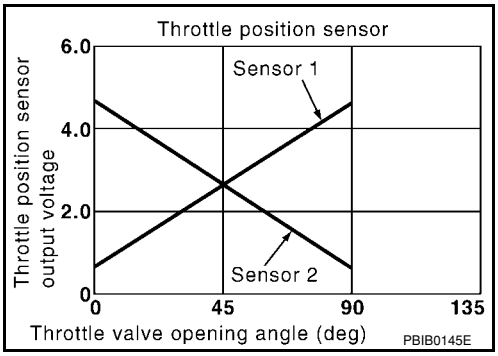

On Board Diagnosis Logic

INFOID:0000000001702943

The MIL will not light up for this diagnosis.

DTC No.	Trouble diagnosis name	DTC detecting condition	Possible cause
P1226 1226	Closed throttle position learning performance	Closed throttle position learning is not performed successfully, repeatedly.	• Electric throttle control actuator (TP sensor 1 and 2)

DTC Confirmation Procedure

INFOID:0000000001702944

NOTE:
If DTC Confirmation Procedure has been previously conducted, always turn ignition switch OFF and wait at least 10 seconds before conducting the next test.
TESTING CONDITION:
Before performing the following procedure, confirm that battery voltage is more than 10V at idle.

WITH CONSULT-II

1. Turn ignition switch ON.
2. Select “DATA MONITOR” mode with CONSULT-II.
3. Turn ignition switch OFF and wait at least 10 seconds.
4. Turn ignition switch ON.
5. Repeat steps 3 and 4 for 32 times.
6. If 1st trip DTC is detected, go to EC-428, "Diagnosis Procedure".

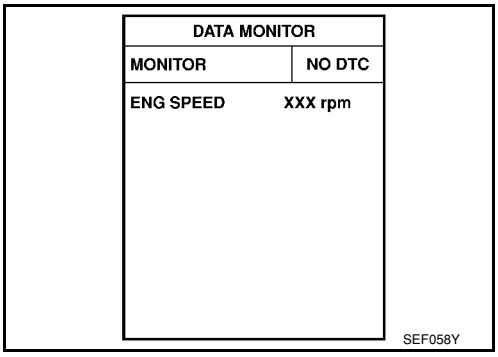

WITH GST

Follow the procedure “WITH CONSULT-II” above.

Diagnosis Procedure

INFOID:0000000001702945

1. CHECK ELECTRIC THROTTLE CONTROL ACTUATOR VISUALLY

1. Turn ignition switch OFF.
2. Remove the intake air duct.

3. Check if foreign matter is caught between the throttle valve (1) and the housing.

- ⇦: Vehicle front

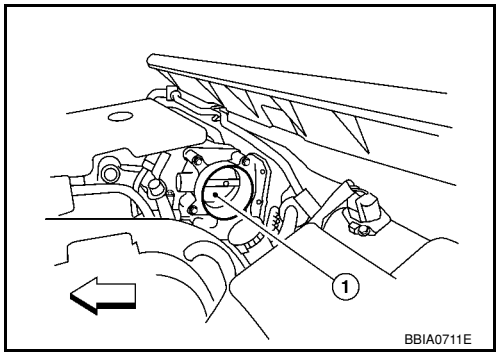

OK or NG

OK >> GO TO 2.
NG >> Remove the foreign matter and clean the electric throttle control actuator inside.

2. REPLACE ELECTRIC THROTTLE CONTROL ACTUATOR

1. Replace the electric throttle control actuator.
2. Perform EC-76, "Throttle Valve Closed Position Learning".
3. Perform EC-76, "Idle Air Volume Learning".

>> **INSPECTION END**

Removal and Installation

INFOID:0000000001702946

ELECTRIC THROTTLE CONTROL ACTUATOR

Refer to EM-18.

DTC P1421 COLD START CONTROL

Description

INFOID:0000000001702947

ECM controls ignition timing and engine idle speed when engine is started with prewarming up condition. This control promotes the activation of three way catalyst by heating the catalyst and reduces emissions.

On Board Diagnosis Logic

INFOID:0000000001702948

DTC No.	Trouble diagnosis name	DTC detecting condition	Possible cause
P1421 1421	Cold start emission reduction strategy monitoring	ECM does not control ignition timing and engine idle speed properly when engine is started with prewarming up condition.	• Lack of intake air volume • Fuel injection system • ECM

DTC Confirmation Procedure

INFOID:0000000001702949

NOTE:
- If DTC Confirmation Procedure has been previously conducted, always turn ignition switch OFF and wait at least 10 seconds before conducting the next test.
- **If DTC P1421 is displayed with other DTC, first perform the trouble diagnosis for other DTC.**

TESTING CONDITION:
Before performing the following procedure, confirm that battery voltage is more than 11V at idle.

WITH CONSULT-II

1. Turn ignition switch OFF and wait at least 10 seconds.
2. Turn ignition switch ON.
3. Select “DATA MONITOR” mode with CONSULT-II.
4. Check that the “COOLAN TEMP/S” indication is between 4°C (39°F) and 36°C (97°F).
   If “COOLAN TEMP/S” indication is within the specified value, go to the following step.
   If “COOLAN TEMP/S” indication is out of the specified value, cool engine down or warm engine up and go to step 1.
5. Start engine and let it idle for 5 minutes.
6. If 1st trip DTC is detected, go to EC-430, "Diagnosis Procedure".

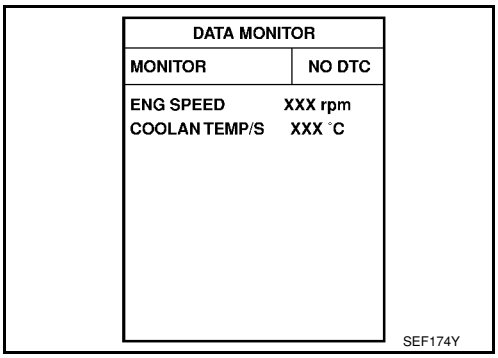

WITH GST

Follow the procedure “WITH CONSULT-II” above.

Diagnosis Procedure

INFOID:0000000001702950

1. PERFORM IDLE AIR VOLUME LEARNING

Perform EC-76, "Idle Air Volume Learning".
Is Idle Air Volume Learning carried out successfully?

Yes or No

Yes >> GO TO 2.
No >> Follow the instruction of Idle Air Volume Learning.

2. CHECK INTAKE SYSTEM

Check for the cause of intake air volume lacking. Refer to the following.
- Crushed intake air passage
- Intake air passage clogging

OK or NG

OK >> GO TO 3.
NG >> Repair or replace malfunctioning part

3. CHECK FUEL INJECTION SYSTEM FUNCTION

Perform EC-257, "DTC Confirmation Procedure" for DTC P0171.

OK or NG

OK >> GO TO 4.
NG >> Go to EC-260, "Diagnosis Procedure" for DTC P0171.

4. PERFORM DTC CONFIRMATION PROCEDURE

With CONSULT-II

1. Turn ignition switch ON.
2. Select “SELF DIAG RESULTS” mode with CONSULT-II.
3. Touch “ERASE”.
4. **Perform DTC Confirmation Procedure.**
   See EC-430, "DTC Confirmation Procedure".
5. Is the 1st trip DTC P1421 displayed again?

With GST

1. Turn ignition switch ON.
2. Select Service $04 with GST.
3. **Perform DTC Confirmation Procedure.**
   See EC-430, "DTC Confirmation Procedure".
4. Is the 1st trip DTC P1421 displayed again?

Yes or No

Yes >> GO TO 5.
No >> **INSPECTION END**

5. REPLACE ECM

1. Replace ECM.
2. Perform initialization of NVIS (NATS) system and registration of all NVIS (NATS) ignition key IDs.
   Refer to BL-211, "ECM Re-communicating Function".
3. Perform EC-75, "VIN Registration".
4. Perform EC-76, "Accelerator Pedal Released Position Learning".
5. Perform EC-76, "Throttle Valve Closed Position Learning".
6. Perform EC-76, "Idle Air Volume Learning".

>> **INSPECTION END**

DTC P1564 ASCD STEERING SWITCH

Component Description

INFOID:0000000001702951

ASCD steering switch has variant values of electrical resistance for each button. ECM reads voltage variation of switch, and determines which button is operated.

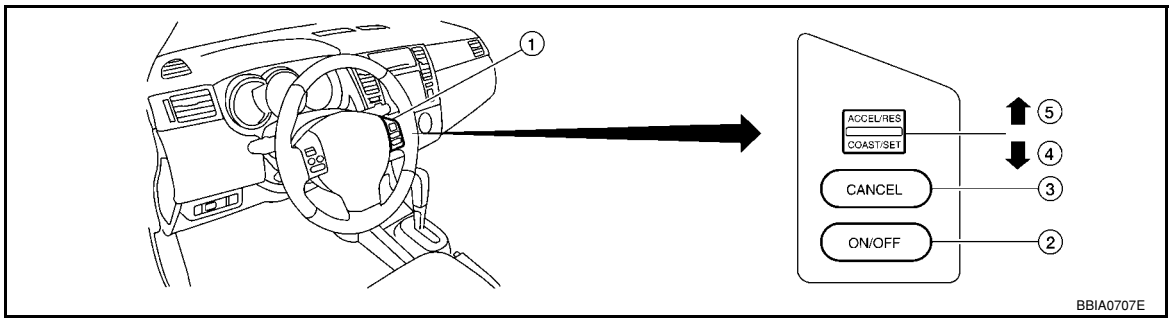

1. ASCD steering switch
2. MAIN switch
3. CANCEL switch
4. RESUME/ACCELERATE switch
5. SET/COAST switch

Refer to EC-28 for the ASCD function.

CONSULT-II Reference Value in Data Monitor Mode

INFOID:0000000001702952

Specification data are reference values.

MONITOR ITEM	CONDITION		SPECIFICATION
MAIN SW	• Ignition switch: ON	MAIN switch: Pressed	ON
		MAIN switch: Released	OFF
CANCEL SW	• Ignition switch: ON	CANCEL switch: Pressed	ON
		CANCEL switch: Released	OFF
RESUME/ACC SW	• Ignition switch: ON	RESUME/ACCELERATE switch: Pressed	ON
		RESUME/ACCELERATE switch: Released	OFF
SET SW	• Ignition switch: ON	SET/COAST switch: Pressed	ON
		SET/COAST switch: Released	OFF

On Board Diagnosis Logic

INFOID:0000000001702953

This self-diagnosis has the one trip detection logic.
The MIL will not light up for this diagnosis.
NOTE:
If DTC P1564 is displayed with DTC P0605, first perform the trouble diagnosis for DTC P0605.
Refer to EC-397.

DTC No.	Trouble Diagnosis Name	DTC Detecting Condition	Possible Cause
P1564 1564	ASCD steering switch	• An excessively high voltage signal from the ASCD steering switch is sent to ECM. • ECM detects that input signal from the ASCD steering switch is out of the specified range. • ECM detects that the ASCD steering switch is stuck ON.	• Harness or connectors (ASCD switch circuit is open or shorted.) • ASCD steering switch • ECM

DTC Confirmation Procedure

INFOID:0000000001702954

NOTE:
If DTC Confirmation Procedure has been previously conducted, always turn ignition switch OFF and wait at least 10 seconds before conducting the next test.

WITH CONSULT-II

1. Turn ignition switch ON.
2. Select “DATA MONITOR” mode with CONSULT-II.
3. Wait at least 10 seconds.
4. Press MAIN switch for at least 10 seconds, then release it and wait at least 10 seconds.
5. Press CANCEL switch for at least 10 seconds, then release it and wait at least 10 seconds.
6. Press RESUME/ACCELERATE switch for at least 10 seconds, then release it and wait at least 10 seconds.
7. Press SET/COAST switch for at least 10 seconds, then release it and wait at least 10 seconds.
8. If DTC is detected, go to EC-435, "Diagnosis Procedure".

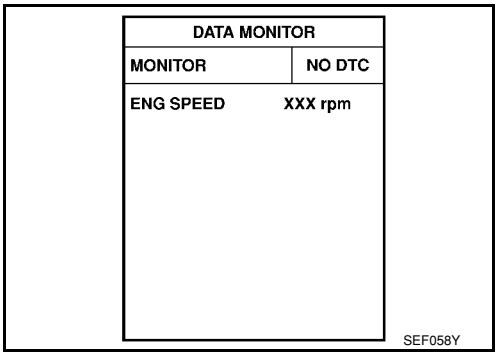

WITH GST

Follow the procedure “WITH CONSULT-II” above.

Wiring Diagram

INFOID:0000000001702955

EC-ASC/SW-01

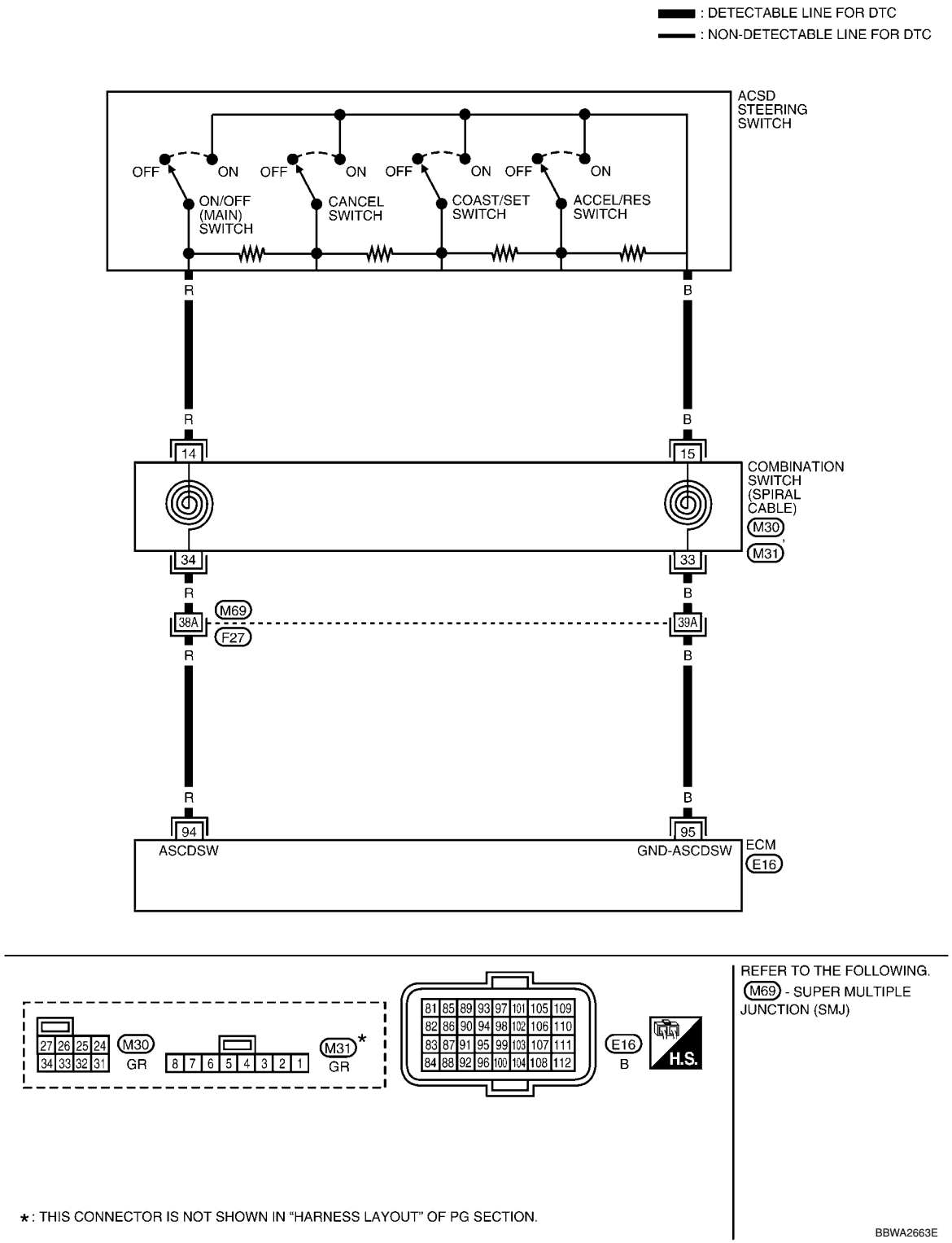

Specification data are reference values and are measured between each terminal and ground.

CAUTION:

Do not use ECM ground terminals when measuring input/output voltage. Doing so may result in damage to the ECM's transistor. Use a ground other than ECM terminals, such as the ground.

TERMINAL NO.	WIRE COLOR	ITEM	CONDITION	DATA (DC Voltage)
94	R	ASCD steering switch	**[Ignition switch: ON]** • ASCD steering switch: OFF	Approximately 4V
			[Ignition switch: ON] • MAIN switch: Pressed	Approximately 0V
			[Ignition switch: ON] • CANCEL switch: Pressed	Approximately 1V
			[Ignition switch: ON] • RESUME/ACCELERATE switch: Pressed	Approximately 3V
			[Ignition switch: ON] • SET/COAST switch: Pressed	Approximately 2V
95	B	Sensor ground	**[Engine is running]** • **Warm-up condition** • Idle speed	Approximately 0V

Diagnosis Procedure

INFOID:0000000001702956

1. CHECK GROUND CONNECTIONS

1. Turn ignition switch OFF.
2. Loosen and retighten ground screw on the body.
   Refer to EC-142, "Ground Inspection".

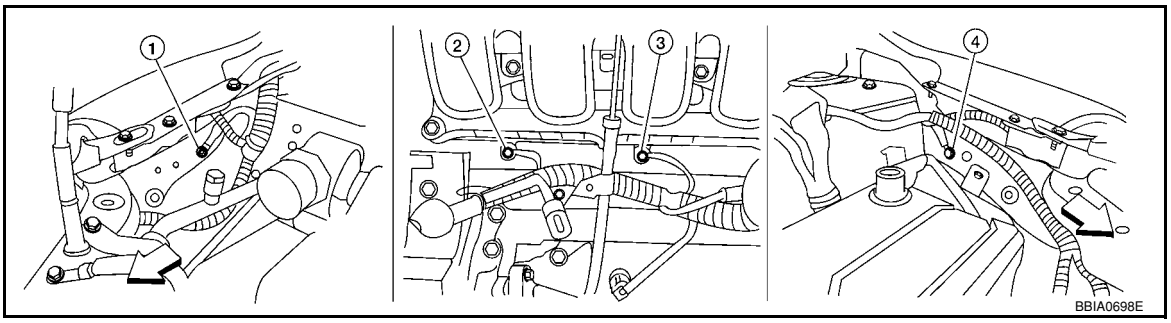

⇦: Vehicle front

1. Body ground E24
2. Engine ground F9
3. Engine ground F16
4. Body ground E15

OK or NG

OK >> GO TO 2.
NG >> Repair or replace ground connections.

2. CHECK ASCD STEERING SWITCH CIRCUIT

With CONSULT-II

1. Turn ignition switch ON.
2. Select “MAIN SW”, “RESUME/ACC SW”, “SET SW and “CANCEL SW” in “DATA MONITOR” mode with CONSULT-II.
3. Check each item indication under the following conditions.

Switch	Monitor item	Condition	Indication
MAIN switch	MAIN SW	Pressed	ON
		Released	OFF
CANCEL switch	CANCEL SW	Pressed	ON
		Released	OFF

DATA MONITOR	
MONITOR	NO DTC
MAIN SW	OFF
CANCEL SW	OFF
RESUME/ACC SW	OFF
SET SW	OFF

SEC006D

Switch	Monitor item	Condition	Indication
RESUME/ACCELERATE switch	RESUME/ACC SW	Pressed	ON
		Released	OFF
SET/COAST switch	SET SW	Pressed	ON
		Released	OFF

Without CONSULT-II

1. Turn ignition switch ON.
2. Check voltage between ECM terminal 94 and ground with pressing each button.

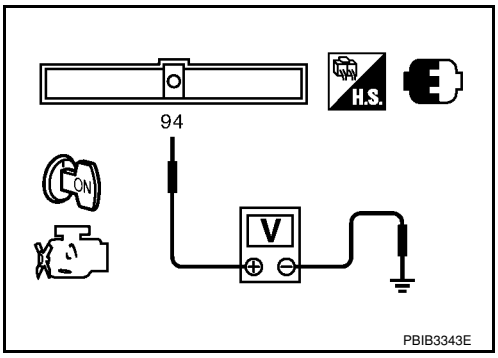

Switch	Condition	Voltage [V]
MAIN switch	Pressed	Approx. 0
	Released	Approx. 4.0
CANCEL switch	Pressed	Approx. 1.0
	Released	Approx. 4.0
RESUME/ACCELERATE switch	Pressed	Approx. 3.0
	Released	Approx. 4.0
SET/COAST switch	Pressed	Approx. 2.0
	Released	Approx. 4.0

OK or NG

OK >> GO TO 8.
NG >> GO TO 3.

3. CHECK ASCD STEERING SWITCH GROUND CIRCUIT FOR OPEN AND SHORT

1. Turn ignition switch OFF.
2. Disconnect combination switch harness connector M102.
3. Disconnect ECM harness connector.
4. Check harness continuity between combination switch terminal 15 and ECM terminal 95. Refer to Wiring Diagram.

Continuity should exist.

5. Also check harness for short to ground or short to power.

OK or NG

OK >> GO TO 5.
NG >> GO TO 4.

4. DETECT MALFUNCTIONING PART

Check the following.
- Harness connectors M69, E7
- Combination switch (spiral cable)
- Harness for open and short between ECM and combination switch

>> Repair open circuit or short to ground or short to power in harness or connectors.

5. CHECK ASCD STEERING SWITCH INPUT SIGNAL CIRCUIT FOR OPEN AND SHORT

1. Check harness continuity between ECM terminal 94 and combination switch terminal 14. Refer to Wiring Diagram.

Continuity should exist.

2. Also check harness for short to ground and short to power.

OK or NG

OK >> GO TO 7.
NG >> GO TO 6.

6. DETECT MALFUNCTIONING PART

Check the following.
- Harness connectors M69, E7
- Combination switch (spiral cable)
- Harness for open and short between ECM and combination switch

>> Repair open circuit or short to ground or short to power in harness or connectors.

7. CHECK ASCD STEERING SWITCH

Refer to EC-437, "Component Inspection".

OK or NG

OK >> GO TO 7.
NG >> Replace ASCD steering switch.

8. CHECK INTERMITTENT INCIDENT

Refer to EC-136.

>> **INSPECTION END**

Component Inspection

INFOID:0000000001702957

ASCD STEERING SWITCH

1. Disconnect combination switch (spiral cable) harness connector M102.
2. Check continuity between combination switch (spiral cable) terminals 14 and 15 with pushing each switch.

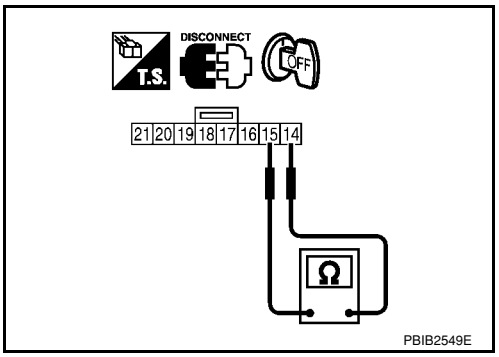

Switch	Condition	Resistance [Ω]
MAIN switch	Pressed	Approx. 0
	Released	Approx. 4,000
CANCEL switch	Pressed	Approx. 250
	Released	Approx. 4,000
RESUME/ACCELERATE switch	Pressed	Approx. 1,480
	Released	Approx. 4,000
SET/COAST switch	Pressed	Approx. 660
	Released	Approx. 4,000

If NG, replace ASCD steering switch.

DTC P1572 ASCD BRAKE SWITCH

Component Description

INFOID:0000000001702958

When the brake pedal is depressed, ASCD brake switch (2) is turned OFF and stop lamp switch (1) is turned ON. ECM detects the state of the brake pedal by this input of two kinds (ON/OFF signal). Refer to EC-28 for the ASCD function.

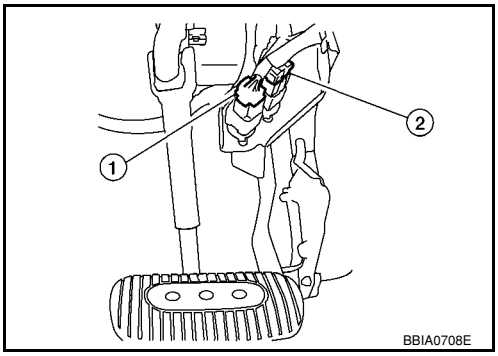

CONSULT-II Reference Value in Data Monitor Mode

INFOID:0000000001702959

Specification data are reference values.

MONITOR ITEM	CONDITION		SPECIFICATION
BRAKE SW1 (ASCD brake switch)	• Ignition switch: ON	• Brake pedal: Fully released (A/T, CVT) • Brake pedal and clutch pedal: Fully released (M/T)	ON
		• Brake pedal: Slightly depressed (A/T, CVT) • Brake pedal and/or clutch pedal: Slightly depressed (M/T)	OFF
BRAKE SW2 (Stop lamp switch)	• Ignition switch: ON	Brake pedal: Fully released	OFF
		Brake pedal: Slightly depressed	ON

On Board Diagnosis Logic

INFOID:0000000001702960

This self-diagnosis has the one trip detection logic.
The MIL will not light up for this diagnosis.
NOTE:
- **If DTC P1572 is displayed with DTC P0605, first perform the trouble diagnosis for DTC P0605. Refer to EC-397.**
- **This self-diagnosis has the one trip detection logic. When malfunction A is detected, DTC is not stored in ECM memory. And in that case, 1st trip DTC and 1st trip freeze frame data are displayed. 1st trip DTC is erased when ignition switch OFF. And even when malfunction A is detected in two consecutive trips, DTC is not stored in ECM memory.**

DTC No.	Trouble Diagnosis Name	DTC Detecting Condition		Possible Cause
P1572 1572	ASCD brake switch	A)	When the vehicle speed is above 30km/h (19 MPH), ON signals from the stop lamp switch and the ASCD brake switch are sent to ECM at the same time.	• Harness or connectors (Stop lamp switch circuit is shorted.) • Harness or connectors (ASCD brake switch circuit is shorted.) • Harness or connectors (ASCD clutch switch circuit is shorted.) (M/T) • Stop lamp switch • ASCD brake switch • ASCD clutch switch (M/T) • Incorrect stop lamp switch installation • Incorrect ASCD brake switch installation • Incorrect ASCD clutch switch installation (M/T) • ECM
		B)	ASCD brake switch signal is not sent to ECM for extremely long time while the vehicle is driving	

DTC Confirmation Procedure

INFOID:0000000001702961

CAUTION:
Always drive vehicle at a safe speed.
NOTE:
- If DTC Confirmation Procedure has been previously conducted, always turn ignition switch OFF and wait at least 10 seconds before conducting the next test.
- Procedure for malfunction B is not described here. It takes extremely long time to complete procedure for malfunction B. By performing procedure for malfunction A, the incident that causes malfunction B can be detected.

TESTING CONDITION:
Steps 4 and 5 may be conducted with the drive wheels lifted in the shop or by driving the vehicle. If a road test is expected to be easier, it is unnecessary to lift the vehicle.

WITH CONSULT-II

1. Start engine.
2. Select “DATA MONITOR” mode with CONSULT-II.
3. Press MAIN switch and make sure that CRUISE indicator lights up.
4. Drive the vehicle for at least 5 consecutive seconds under the following condition.

VHCL SPEED SE	More than 30 km/h (19 MPH)
Shift lever	Suitable position

If 1st trip DTC is detected, go to EC-441, "Diagnosis Procedure".
If 1st trip DTC is not detected, go to the following step.

5. Drive the vehicle for at least 5 consecutive seconds under the following condition.

VHCL SPEED SE	More than 30 km/h (19 MPH)
Shift lever	Suitable position
Driving location	Depress the brake pedal for more than 5 seconds so as not to come off from the above-mentioned vehicle speed.

6. If 1st trip DTC is detected, go to EC-441, "Diagnosis Procedure".

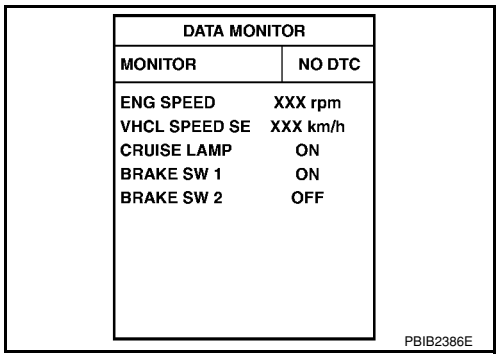

WITH GST

Follow the procedure “WITH CONSULT-II” above.

Wiring Diagram

INFOID:0000000001702962

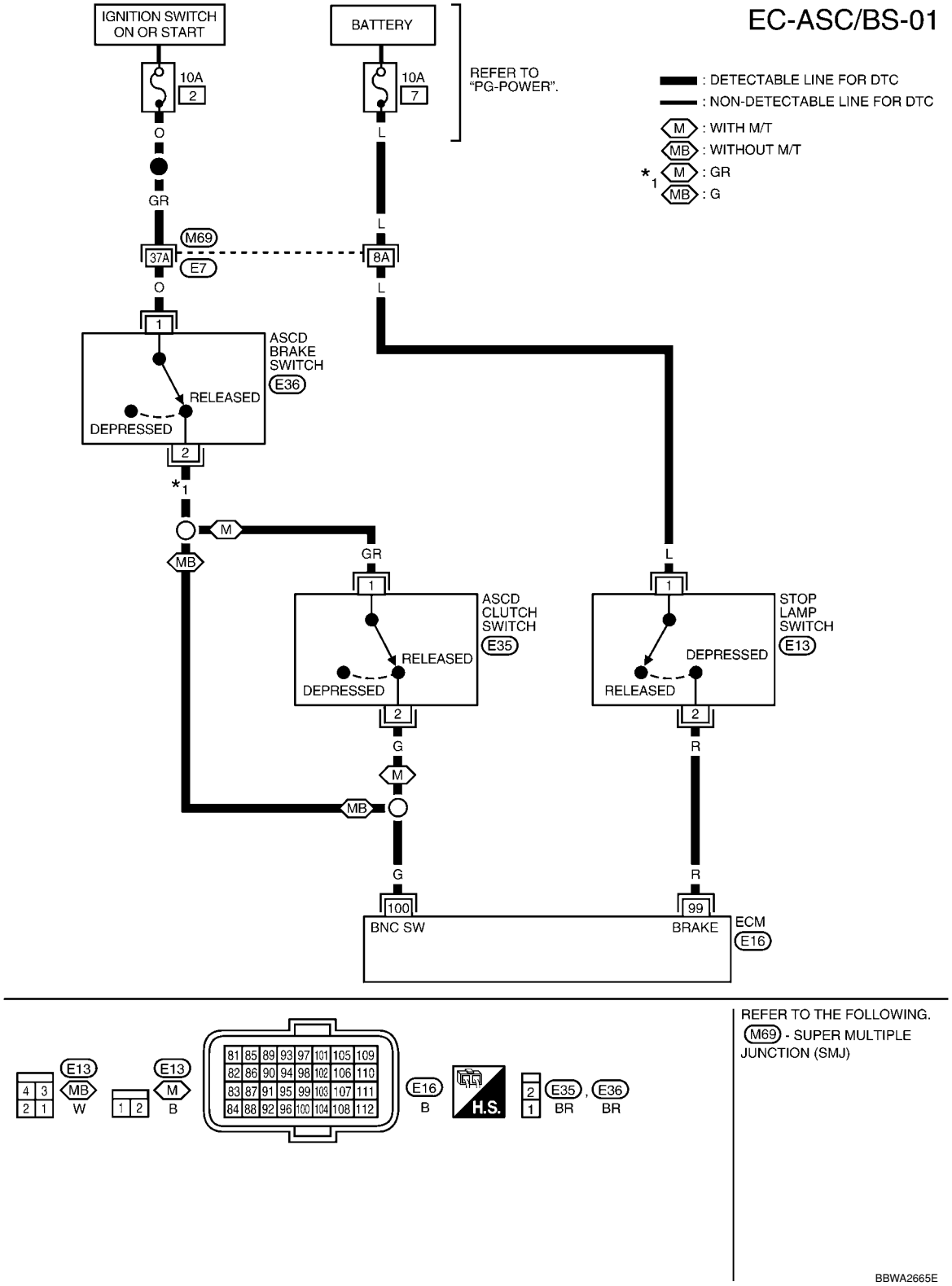

Specification data are reference values and are measured between each terminal and ground.

CAUTION:

Do not use ECM ground terminals when measuring input/output voltage. Doing so may result in damage to the ECM's transistor. Use a ground other than ECM terminals, such as the ground.

TERMINAL NO.	WIRE COLOR	ITEM	CONDITION	DATA (DC Voltage)
99	R	Stop lamp switch	**[Ignition switch: ON]** • Brake pedal: Fully released	Approximately 0V
			[Ignition switch: ON] • Brake pedal: Slightly depressed	BATTERY VOLTAGE (11 - 14V)
100	G	ASCD brake switch	• Brake pedal: Slightly depressed (A/T, CVT) • Brake pedal and clutch pedal: Fully released (M/T)	Approximately 0V
			• Brake pedal: Slightly depressed (A/T, CVT) • Brake pedal and/or clutch pedal: Slightly depressed (M/T)	BATTERY VOLTAGE (11 - 14V)

Diagnosis Procedure

INFOID:0000000001702963

1. CHECK OVERALL FUNCTION-I

With CONSULT-II

1. Turn ignition switch ON.
2. Select “BRAKE SW1” in “DATA MONITOR” mode with CONSULT-II.
3. Check “BRAKE SW1” indication under the following conditions.

M/T models

CONDITION	INDICATION
Clutch pedal and/or brake pedal: Slightly depressed	OFF
Clutch pedal and brake pedal: Fully released	ON

A/T and CVT models

CONDITION	INDICATION
Brake pedal: Slightly depressed	OFF
Brake pedal: Fully released	ON

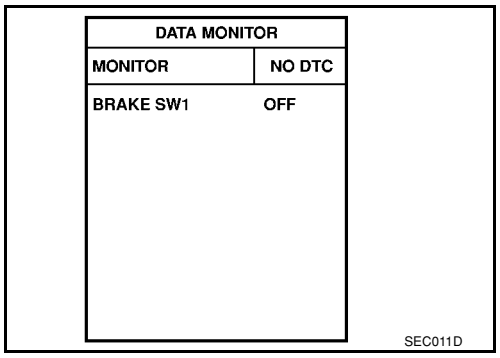

Without CONSULT-II

1. Turn ignition switch ON.
2. Check voltage between ECM terminal 100 and ground under the following conditions.

M/T models

CONDITION	VOLTAGE
Clutch pedal and/or brake pedal: Slightly depressed	Approximately 0V
Clutch pedal and brake pedal: Fully released	Battery voltage

A/T and CVT models

CONDITION	VOLTAGE
Brake pedal: Slightly depressed	Approximately 0V
Brake pedal: Fully released	Battery voltage

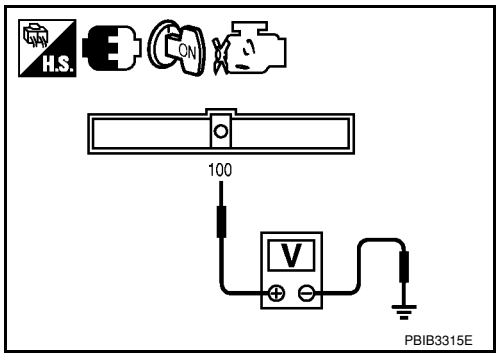

OK or NG

OK >> GO TO 2.
NG (M/T models) >>GO TO 3.
NG (A/T and CVT models) >>GO TO 4.

2. CHECK OVERALL FUNCTION-II

With CONSULT-II

Check “BRAKE SW2” indication in “DATA MONITOR” mode.

CONDITION	INDICATION
Brake pedal: Fully released	OFF
Brake pedal: Slightly depressed	ON

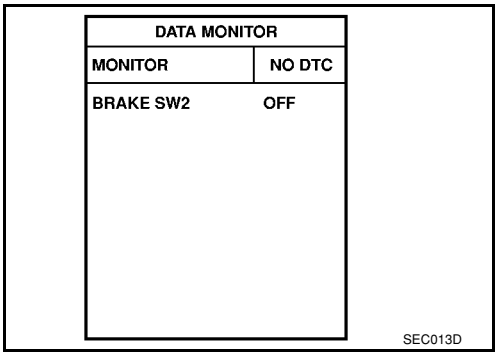

Without CONSULT-II

Check voltage between ECM terminal 99 and ground under the following conditions.

CONDITION	VOLTAGE
Brake pedal: Fully released	Approximately 0V
Brake pedal: Slightly depressed	Battery voltage

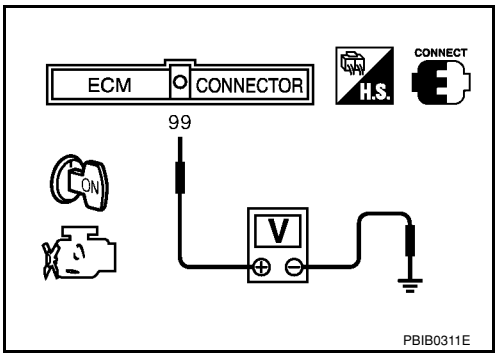

OK or NG

OK >> GO TO 15.
NG >> GO TO 11.

3. CHECK ASCD CLUTCH SWITCH POWER SUPPLY CIRCUIT

1. Turn ignition switch OFF.
2. Disconnect ASCD clutch switch (1) harness connector.
- Clutch pedal (2)
3. Turn ignition switch ON.

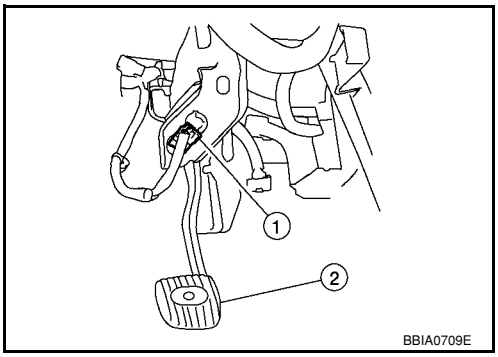

4. Check voltage between ASCD clutch switch terminal 1 and ground with CONSULT-II or tester.

Voltage: Battery voltage

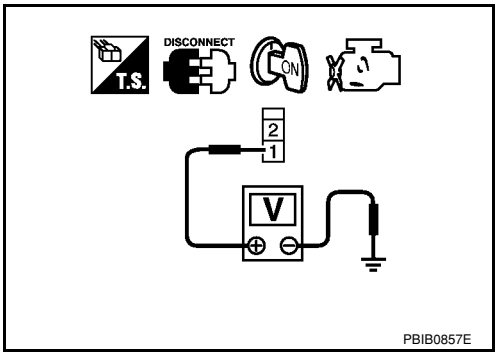

OK or NG

OK >> GO TO 9.
NG >> GO TO 4.

4. CHECK ASCD BRAKE SWITCH POWER SUPPLY

1. Turn ignition switch OFF.

2. Disconnect ASCD brake switch (2) harness connector.
- Stop lamp switch (1)
3. Turn ignition switch ON.

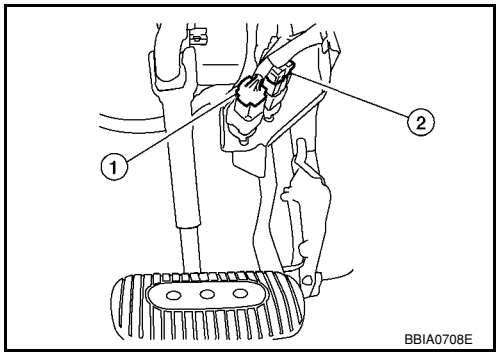

4. Check voltage between ASCD brake switch terminal 1 and ground under the following conditions with CONSULT-II or tester.

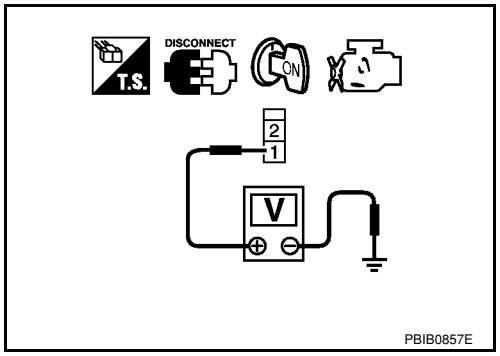

CONDITION	VOLTAGE
Clutch pedal: Fully released	Battery voltage
Clutch pedal: Slightly depressed	Approx. 0V

OK or NG

OK (M/T models) >>GO TO 6.
OK (A/T and CVT models) >>GO TO 7.
NG >> GO TO 5.

5. DETECT MALFUNCTIONING PART

Check the following.
- Harness connectors M69, E7
- 10A fuse
- Harness for open or short between ASCD brake switch and fuse

>> Repair open circuit or short to ground or short to power in harness or connectors.

6. CHECK ASCD CLUTCH SWITCH INPUT SIGNAL CIRCUIT FOR OPEN AND SHORT

1. Turn ignition switch OFF.
2. Check harness continuity between ASCD brake switch terminal 2 and ASCD clutch switch terminal 1. Refer to Wiring Diagram.

Continuity should exist.

3. Also check harness for short to ground and short to power.

OK or NG

OK >> GO TO 8.
NG >> Repair open circuit or short to ground or short to power in harness or connectors.

7. CHECK ASCD BRAKE SWITCH INPUT SIGNAL CIRCUIT FOR OPEN AND SHORT

1. Turn ignition switch OFF.
2. Disconnect ECM harness connector.
3. Check harness continuity between ECM terminal 100 and ASCD brake switch terminal 2. Refer to Wiring Diagram.

Continuity should exist.

4. Also check harness for short to ground and short to power.

OK or NG

OK >> GO TO 8.
NG >> Repair open circuit or short to ground or short to power in harness or connectors.

8. CHECK ASCD BRAKE SWITCH

Refer to EC-445, "Component Inspection".

OK or NG

OK >> GO TO 15.
NG >> Replace ASCD brake switch.

9. CHECK ASCD CLUTCH SWITCH INPUT SIGNAL CIRCUIT FOR OPEN AND SHORT

1. Turn ignition switch OFF.
2. Disconnect ECM harness connector.
3. Check harness continuity between ECM terminal 100 and ASCD clutch switch terminal 2. Refer to Wiring Diagram.

Continuity should exist.

4. Also check harness for short to ground and short to power.

OK or NG

OK >> GO TO 10.
NG >> Repair open circuit or short to ground or short to power in harness or connectors.

10. CHECK ASCD CLUTCH SWITCH

Refer to EC-445, "Component Inspection"

OK or NG

OK >> GO TO 15.
NG >> Replace ASCD clutch switch.

11. CHECK STOP LAMP SWITCH POWER SUPPLY CIRCUIT

1. Turn ignition switch OFF.
2. Disconnect stop lamp switch (1) harness connector.
- ASCD brake switch (2)

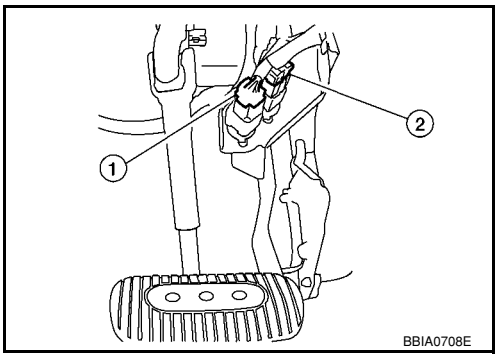

3. Check voltage between stop lamp switch terminal 1 and ground with CONSULT -II or tester.

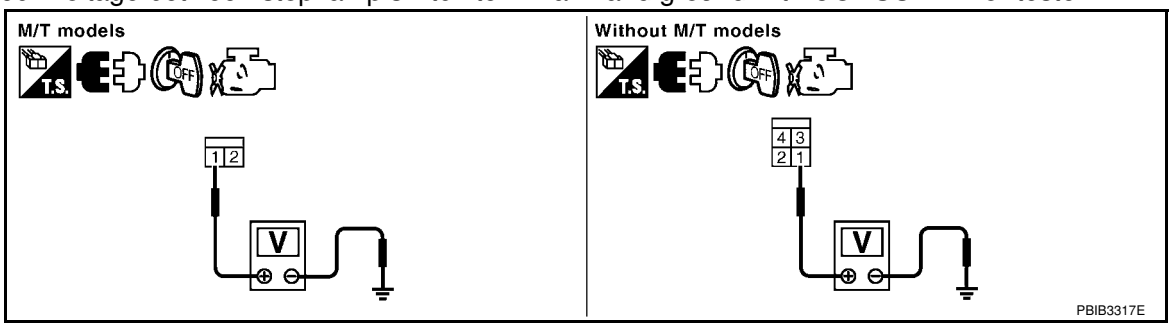

Voltage: Battery voltage

OK or NG

OK >> GO TO 13.
NG >> GO TO 12.

12. DETECT MALFUNCTIONING PART

Check the following.
- Harness connectors M69, E7

- Harness for open or short between stop lamp switch and battery

>> Repair open circuit or short to ground or short to power in harness or connectors.

13. CHECK STOP LAMP SWITCH INPUT SIGNAL CIRCUIT FOR OPEN AND SHORT

1. Disconnect ECM harness connector.
2. Check harness continuity between ECM terminal 99 and stop lamp switch terminal 2. Refer to Wiring Diagram.

Continuity should exist.

3. Also check harness for short to ground and short to power.

OK or NG

OK >> GO TO 14.
NG >> Repair open circuit or short to ground or short to power in harness or connectors.

14. CHECK STOP LAMP SWITCH

Refer to EC-445, "Component Inspection"

OK or NG

OK >> GO TO 15.
NG >> Replace stop lamp switch.

15. CHECK INTERMITTENT INCIDENT

Refer to EC-136.

>> **INSPECTION END**

Component Inspection

INFOID:0000000001702964

ASCD BRAKE SWITCH

1. Turn ignition switch OFF.
2. Disconnect ASCD brake switch harness connector.
3. Check continuity between ASCD brake switch terminals 1 and 2 under the following conditions.

Condition	Continuity
Brake pedal: Fully released.	Should exist.
Brake pedal: Slightly depressed.	Should not exist.

If NG, adjust ASCD brake switch installation, refer to BR-5, and perform step 3 again.

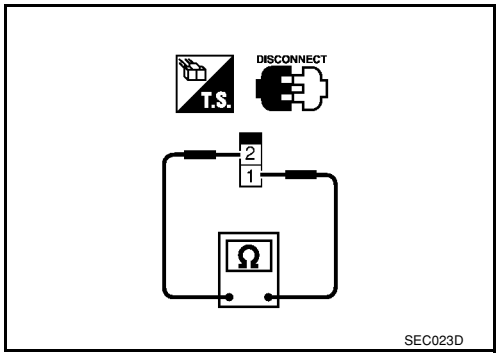

ASCD CLUTCH SWITCH

1. Turn ignition switch OFF.
2. Disconnect ASCD clutch switch harness connector.

3. Check continuity between ASCD clutch switch terminals 1 and 2 under the following conditions.

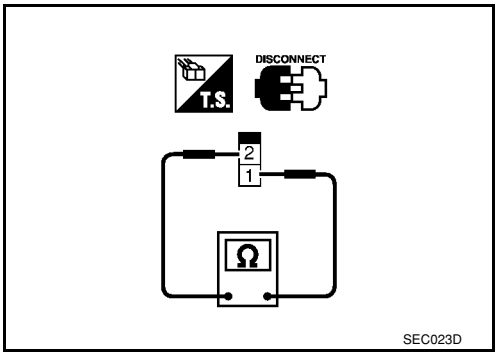

Condition	Continuity
Clutch pedal: Fully released.	Should exist.
Clutch pedal: Slightly depressed.	Should not exist.

If NG, adjust ASCD clutch switch installation, refer to CL-5, and perform step 3 again.

STOP LAMP SWITCH

1. Turn ignition switch OFF.
2. Disconnect stop lamp switch harness connector.
3. Check continuity between stop lamp switch terminals 1 and 2 under the following conditions.

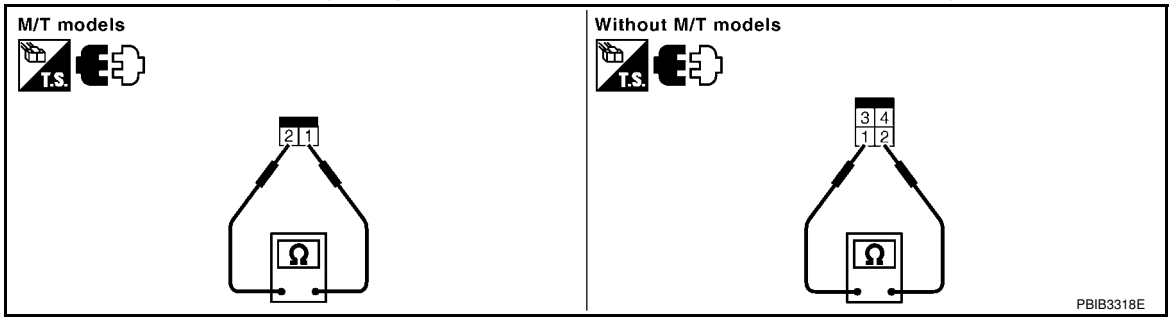

Condition	Continuity
Brake pedal: Fully released.	Should not exist.
Brake pedal: Slightly depressed.	Should exist.

If NG, adjust stop lamp switch installation, refer to BR-5, and perform step 3 again.

DTC P1574 ASCD VEHICLE SPEED SENSOR

Component Description

INFOID:0000000001702965

The ECM receives two vehicle speed sensor signals via CAN communication line. One is sent from combination meter, and the other is from TCM (Transmission control module). The ECM uses these signals for ASCD control. Refer to EC-28 for ASCD functions.

On Board Diagnosis Logic

INFOID:0000000001702966

This self-diagnosis has the one trip detection logic.
The MIL will not light up for this diagnosis.
NOTE:
- **If DTC P1574 is displayed with DTC U1000, U1001, first perform the trouble diagnosis for DTC U1000, U1001. Refer to EC-143.**
- **If DTC P1574 is displayed with DTC U1010, first perform the trouble diagnosis for DTC U1010. Refer to EC-145.**
- **If DTC P1574 is displayed with DTC P0500, first perform the trouble diagnosis for DTC P0500. Refer to EC-391.**
- **If DTC P1574 is displayed with DTC P0605, first perform the trouble diagnosis for DTC P0605. Refer to EC-397.**

DTC No.	Trouble Diagnosis Name	DTC Detecting Condition	Possible Cause
P1574 1574	ASCD vehicle speed sensor	ECM detects a difference between two vehicle speed signals is out of the specified range.	• Harness or connectors (CAN communication line is open or shorted.) • Harness or connectors (Combination meter circuit is open or shorted.) • TCM (A/T and CVT models) • Combination meter • Wheel sensor • ECM

DTC Confirmation Procedure

INFOID:0000000001702967

CAUTION:
Always drive vehicle at a safe speed.
NOTE:
If DTC Confirmation Procedure has been previously conducted, always turn ignition switch OFF and wait at least 10 seconds before conducting the next test.
TESTING CONDITION:
Step 3 may be conducted with the drive wheels lifted in the shop or by driving the vehicle. If a road test is expected to be easier, it is unnecessary to lift the vehicle.

WITH CONSULT-II

1. Start engine.
2. Select “DATA MONITOR” mode with CONSULT-II.
3. Drive the vehicle at more than 40 km/h (25MPH).
4. If DTC is detected, go to EC-448, "Diagnosis Procedure".

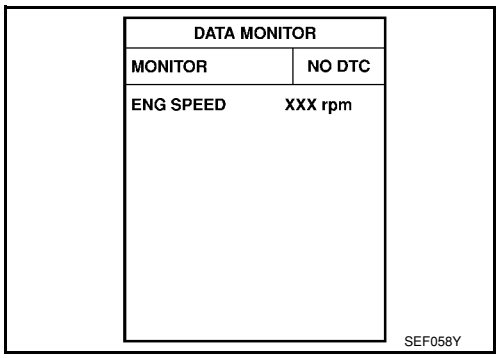

WITH GST

Follow the procedure “WITH CONSULT-II” above.

Diagnosis Procedure

INFOID:0000000001702968

1. CHECK DTC WITH TCM

Check DTC with TCM. Refer to AT-36 (A/T) or CVT-26 (CVT).

OK or NG

OK >> GO TO 2.
NG >> Perform trouble shooting relevant to DTC indicated.

2. CHECK DTC WITH “ABS ACTUATOR AND ELECTRIC UNIT”

Refer to BRC-8.

OK or NG

OK >> GO TO 3.
NG >> Repair or replace.

3. CHECK COMBINATION METER

Check combination meter function.
Refer to DI-4.

>> **INSPECTION END**

DTC P1715 INPUT SPEED SENSOR (TURBINE REVOLUTION SENSOR)

Description

INFOID:0000000001702969

ECM receives turbine revolution sensor signal from TCM through CAN communication line. ECM uses this signal for engine control.

CONSULT-II Reference Value in Data Monitor Mode

INFOID:0000000001702970

Specification data are reference values.

MONITOR ITEM	CONDITION	SPECIFICATION
I/P PULLY SPD	• Vehicle speed: More than 20 km/h (12MPH)	Almost the same speed as the tachometer indication

On Board Diagnosis Logic

INFOID:0000000001702971

NOTE:
- **If DTC P1715 is displayed with DTC U1000, U1001 first perform the trouble diagnosis for DTC U1000, U1001. Refer to EC-143.**
- **If DTC P1715 is displayed with DTC U1010, first perform the trouble diagnosis for DTC U1010. Refer to EC-145.**
- **If DTC P1715 is displayed with DTC P0335, first perform the trouble diagnosis for DTC P0335. Refer to EC-295.**
- **If DTC P1715 is displayed with DTC P0340 first perform the trouble diagnosis for DTC P0340. Refer to EC-302.**
- **If DTC P1715 is displayed with DTC P0605, first perform the trouble diagnosis for DTC P0605. Refer to EC-397.**

The MIL will not lights up for this diagnosis.

DTC No.	Trouble diagnosis name	DTC detecting condition	Possible cause
P1715 1715	Input speed sensor (Turbine revolution sensor) (TCM output)	Turbine revolution sensor signal is different from the theoretical value calculated by ECM from revolution sensor signal and engine rpm signal.	• Harness or connectors (CAN communication line is open or shorted) • Harness or connectors (Turbine revolution sensor circuit is open or shorted) • TCM

Diagnosis Procedure

INFOID:0000000001702972

1. CHECK DTC WITH TCM

Check DTC with TCM. Refer to AT-36.

OK or NG

OK >> GO TO 2.
NG >> Perform trouble shooting relevant to DTC indicated.

2. REPLACE TCM

Replace TCM. Refer to AT-39.

>> **INSPECTION END**

DTC P1715 INPUT SPEED SENSOR (PRIMARY SPEED SENSOR)

Description

INFOID:0000000001702973

ECM receives primary speed sensor signal from TCM through CAN communication line.

CONSULT-II Reference Value in Data Monitor Mode

INFOID:0000000001702974

Specification data are reference values.

MONITOR ITEM	CONDITION	SPECIFICATION
I/P PULLY SPD	• Vehicle speed: More than 20 km/h (12MPH)	Almost the same speed as the tachometer indication

On Board Diagnosis Logic

INFOID:0000000001702975

NOTE:
- **If DTC P1715 is displayed with DTC U1000 or U1001 first perform the trouble diagnosis for DTC U1000, U1001. Refer to EC-143.**
- **If DTC P1715 is displayed with DTC U1010, first perform the trouble diagnosis for DTC U1010. Refer to EC-145.**
- **If DTC P1715 is displayed with DTC P0335, first perform the trouble diagnosis for DTC P0335. Refer to EC-295.**
- **If DTC P1715 is displayed with DTC P0340 first perform the trouble diagnosis for DTC P0340. Refer to EC-302.**
- **If DTC P1715 is displayed with DTC P0605, first perform the trouble diagnosis for DTC P0605. Refer to EC-397.**

The MIL will not light up for this diagnosis.

DTC No.	Trouble diagnosis name	DTC detecting condition	Possible cause
P1715 1715	Input speed sensor (Primary speed sensor) (TCM output)	Primary speed sensor signal is different from the theoretical value calculated by ECM from secondary speed sensor signal and engine rpm signal.	• Harness or connectors (CAN communication line is open or shorted) • Harness or connectors (Primary speed sensor circuit is open or shorted) • TCM

DTC Confirmation Procedure

INFOID:0000000001702976

CAUTION:
Always drive vehicle at a safe speed.
NOTE:
If DTC Confirmation Procedure has been previously conducted, always turn ignition switch OFF and wait at least 10 seconds before conducting the next test.

WITH CONSULT-II

1. Turn ignition switch ON.
2. Select “DATA MONITOR” mode with CONSULT-II.
3. Start engine.
4. Drive vehicle at a speed of more than 50 km/h (31 MPH) for at least 5 seconds.
5. If 1st trip DTC is detected, go to EC-451, "Diagnosis Procedure".

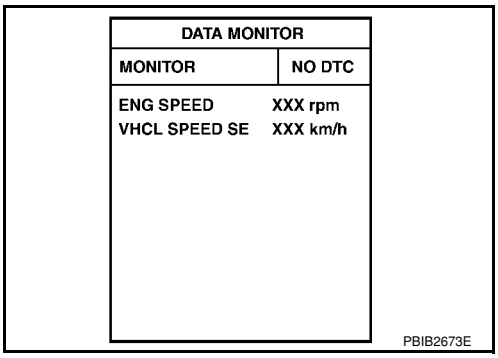

WITH GST

Follow the procedure “WITH CONSULT-II” above.

Diagnosis Procedure

INFOID:0000000001702977

1. CHECK DTC WITH TCM

Check DTC with TCM. Refer to AT-36.

OK or NG

OK >> GO TO 2.
NG >> Perform trouble shooting relevant to DTC indicated.

2. REPLACE TCM

Replace TCM. Refer to AT-202, "Removal and Installation".

>> **INSPECTION END**

DTC P1805 BRAKE SWITCH

Description

INFOID:0000000001702978

Brake switch signal is applied to the ECM through the stop lamp switch when the brake pedal is depressed. This signal is used mainly to decrease the engine speed when the vehicle is driving.

CONSULT-II Reference Value in Data Monitor Mode

INFOID:0000000001702979

Specification data are reference values.

MONITOR ITEM	CONDITION		SPECIFICATION
BRAKE SW	• Ignition switch: ON	Brake pedal: Fully released	OFF
		Brake pedal: Slightly depressed	ON

On Board Diagnosis Logic

INFOID:0000000001702980

The MIL will not light up for this self-diagnosis.

DTC No.	Trouble diagnosis name	DTC detecting condition	Possible cause
P1805 1805	Brake switch	A brake switch signal is not sent to ECM for extremely long time while the vehicle is driving.	• Harness or connectors (Stop lamp switch circuit is open or shorted.) • Stop lamp switch

FAIL-SAFE MODE

When the malfunction is detected, the ECM enters in fail-safe mode.

Engine operation condition in fail-fail safe mode	
ECM controls the electric throttle control actuator by regulating the throttle opening to a small range. Therefore, acceleration will be poor.	
Vehicle condition	Driving condition
Engine: Idling	Normal
Accelerating	Poor acceleration

DTC Confirmation Procedure

INFOID:0000000001702981

WITH CONSULT-II

1. Turn ignition switch ON.
2. Fully depress the brake pedal for at least 5 seconds.
3. Erase the DTC with CONSULT-II.
4. Select “DATA MONITOR” mode with CONSULT-II.
5. If 1st trip DTC is detected, go to EC-454, "Diagnosis Procedure".

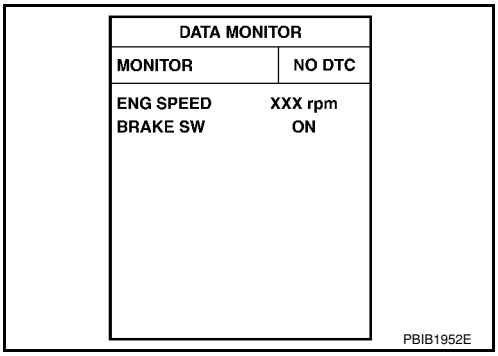

WITH GST

Follow the procedure “WITH CONSULT-II” above.

Wiring Diagram

INFOID:0000000001702982

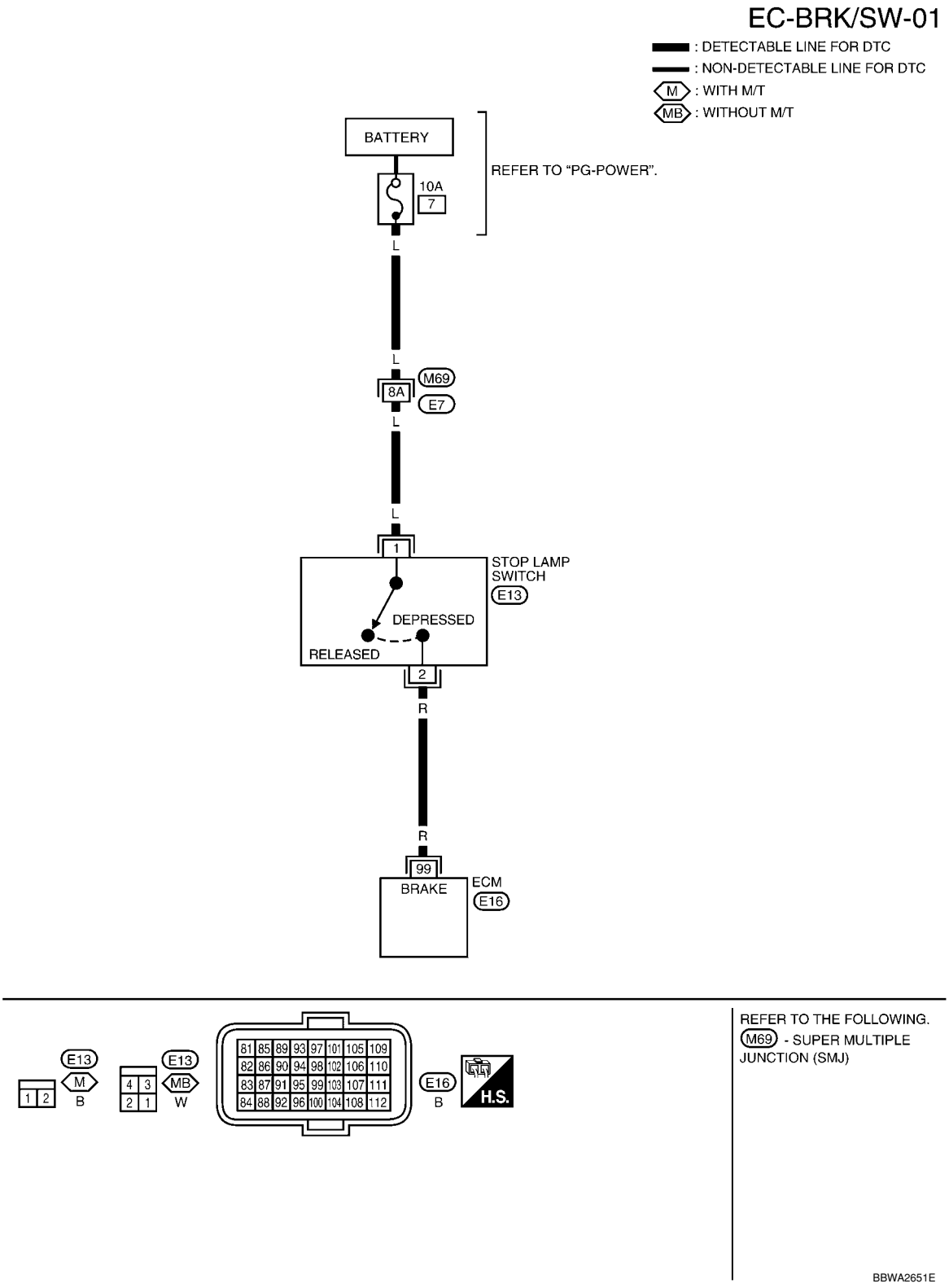

Specification data are reference values and are measured between each terminal and ground.

CAUTION:

Do not use ECM ground terminals when measuring input/output voltage. Doing so may result in damage to the ECM's transistor. Use a ground other than ECM terminals, such as the ground.

TERMINAL NO.	WIRE COLOR	ITEM	CONDITION	DATA (DC Voltage)
99	R	Stop lamp switch	**[Ignition switch: OFF]** • Brake pedal: Fully released	Approximately 0V
			[Ignition switch: OFF] • Brake pedal: Slightly depressed	BATTERY VOLTAGE (11 - 14V)

Diagnosis Procedure

INFOID:0000000001702983

1.CHECK STOP LAMP SWITCH CIRCUIT

1. Turn ignition switch OFF.
2. Check the stop lamp when depressing and releasing the brake pedal.

Brake pedal	Stop lamp
Fully released	Not illuminated
Slightly depressed	Illuminated

OK or NG

OK >> GO TO 4.
NG >> GO TO 2.

2.CHECK STOP LAMP SWITCH POWER SUPPLY CIRCUIT

1. Disconnect stop lamp switch (1) harness connector.
- Brake pedal (2)

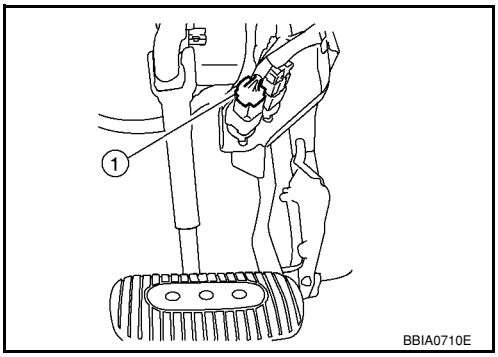

2. Check voltage between stop lamp switch terminal 1 and ground with CONSULT-II or tester.

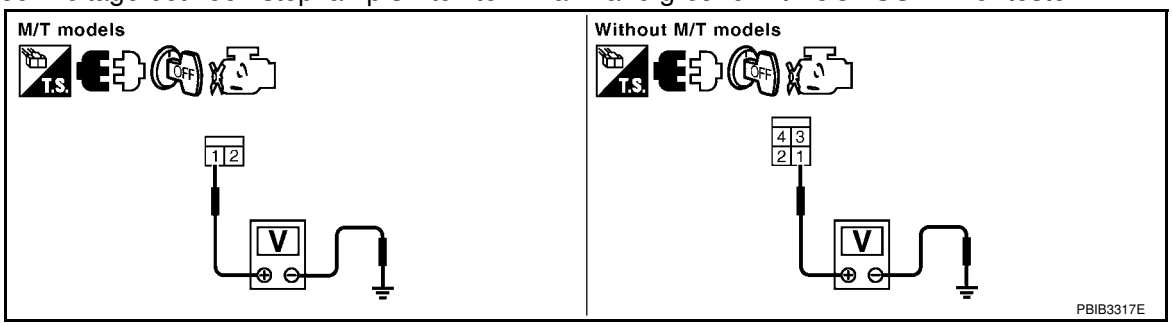

Voltage: Battery voltage

OK or NG

OK >> GO TO 4.
NG >> GO TO 3.

3.DETECT MALFUNCTIONING PART

Check the following.
- Harness connectors M69, E7
- 10A fuse
- Harness for open and short between stop lamp switch and battery

>> Repair open circuit or short to ground or short to power in harness or connectors.

4. CHECK STOP LAMP SWITCH INPUT SIGNAL CIRCUIT FOR OPEN AND SHORT

1. Disconnect stop lamp switch (1) harness connector.
2. Disconnect ECM harness connector.
3. Check harness continuity between stop lamp switch terminal 2 and ECM terminal 99. Refer to Wiring Diagram.

Continuity should exist.

4. Also check harness for short to ground and short to power.

OK or NG

OK >> GO TO 5.
NG >> Repair open circuit or short to ground or short to power in harness connectors.

5. CHECK STOP LAMP SWITCH

Refer to EC-455, "Component Inspection".

OK or NG

OK >> GO TO 6.
NG >> Replace stop lamp switch.

6. CHECK INTERMITTENT INCIDENT

Refer to EC-136.

>> **INSPECTION END**

Component Inspection

INFOID:0000000001702984

STOP LAMP SWITCH

1. Turn ignition switch OFF.
2. Disconnect stop lamp switch harness connector.
3. Check continuity between stop lamp switch terminals 1 and 2 under the following conditions.

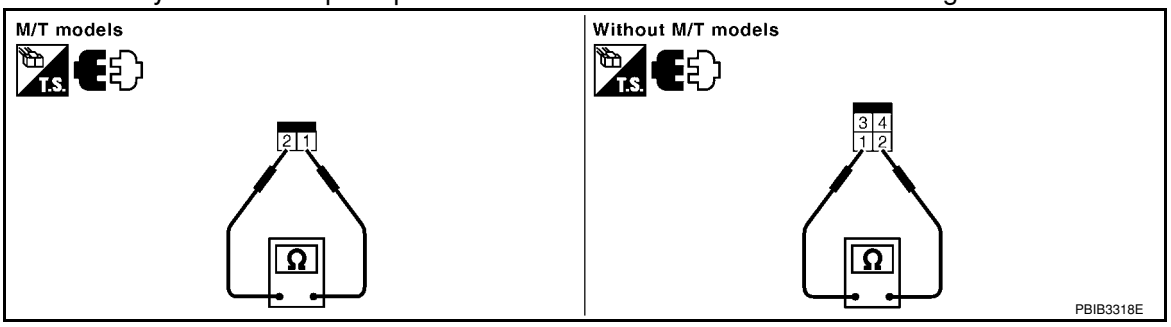

Condition	Continuity
Brake pedal: Fully released.	Should not exist.
Brake pedal: Slightly depressed.	Should exist.

If NG, adjust stop lamp switch installation, refer to BR-5, and perform step 3 again.

DTC P2100, P2103 THROTTLE CONTROL MOTOR RELAY

Component Description

INFOID:0000000001702985

Power supply for the throttle control motor is provided to the ECM via throttle control motor relay. The throttle control motor relay is ON/OFF controlled by the ECM. When the ignition switch is turned ON, the ECM sends an ON signal to throttle control motor relay and battery voltage is provided to the ECM. When the ignition switch is turned OFF, the ECM sends an OFF signal to throttle control motor relay and battery voltage is not provided to the ECM.

CONSULT-II Reference Value in Data Monitor Mode

INFOID:0000000001702986

Specification data are reference values.

MONITOR ITEM	CONDITION	SPECIFICATION
THRTL RELAY	• Ignition switch: ON	ON

On Board Diagnosis Logic

INFOID:0000000001702987

These self-diagnoses have one trip detection logic.

DTC No.	Trouble diagnosis name	DTC detecting condition	Possible cause
P2100 2100	Throttle control motor relay circuit open	ECM detects a voltage of power source for throttle control motor is excessively low.	• Harness or connectors (Throttle control motor relay circuit is open) • Throttle control motor relay
P2103 2103	Throttle control motor relay circuit short	ECM detects the throttle control motor relay is stuck ON.	• Harness or connectors (Throttle control motor relay circuit is shorted) • Throttle control motor relay

FAIL-SAFE MODE

When the malfunction is detected, ECM enters fail-safe mode and the MIL lights up.

Engine operating condition in fail-safe mode
ECM stops the electric throttle control actuator control, throttle valve is maintained at a fixed opening (approx. 5 degrees) by the return spring.

DTC Confirmation Procedure

INFOID:0000000001702988

NOTE:
If DTC Confirmation Procedure has been previously conducted, always turn ignition switch OFF and wait at least 10 seconds before conducting the next test.

PROCEDURE FOR DTC P2100

With CONSULT-II

1. Turn ignition switch ON and wait at least 2 seconds.
2. Select “DATA MONITOR” mode with CONSULT-II.
3. Start engine and let it idle for 5 seconds.
4. If DTC is detected, go to EC-459, "Diagnosis Procedure".

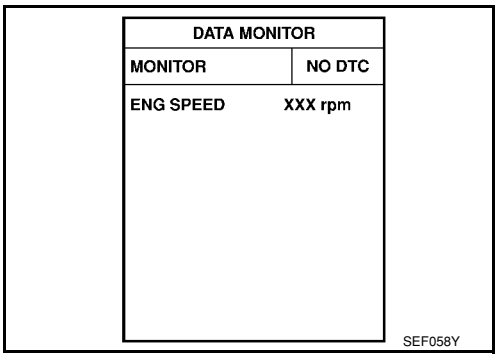

With GST
Follow the procedure “With CONSULT-II” above.

PROCEDURE FOR DTC P2103

TESTING CONDITION:
Before performing the following procedure, confirm that battery voltage is more than 10V at idle.

With CONSULT-II

1. Turn ignition switch ON and wait at least 1 second.
2. Select “DATA MONITOR” mode with CONSULT-II.
3. If DTC is detected, go to EC-459, "Diagnosis Procedure".

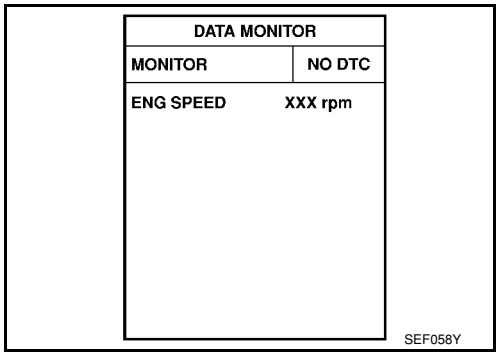

With GST
Follow the procedure “With CONSULT-II” above.

Wiring Diagram

INFOID:0000000001702989

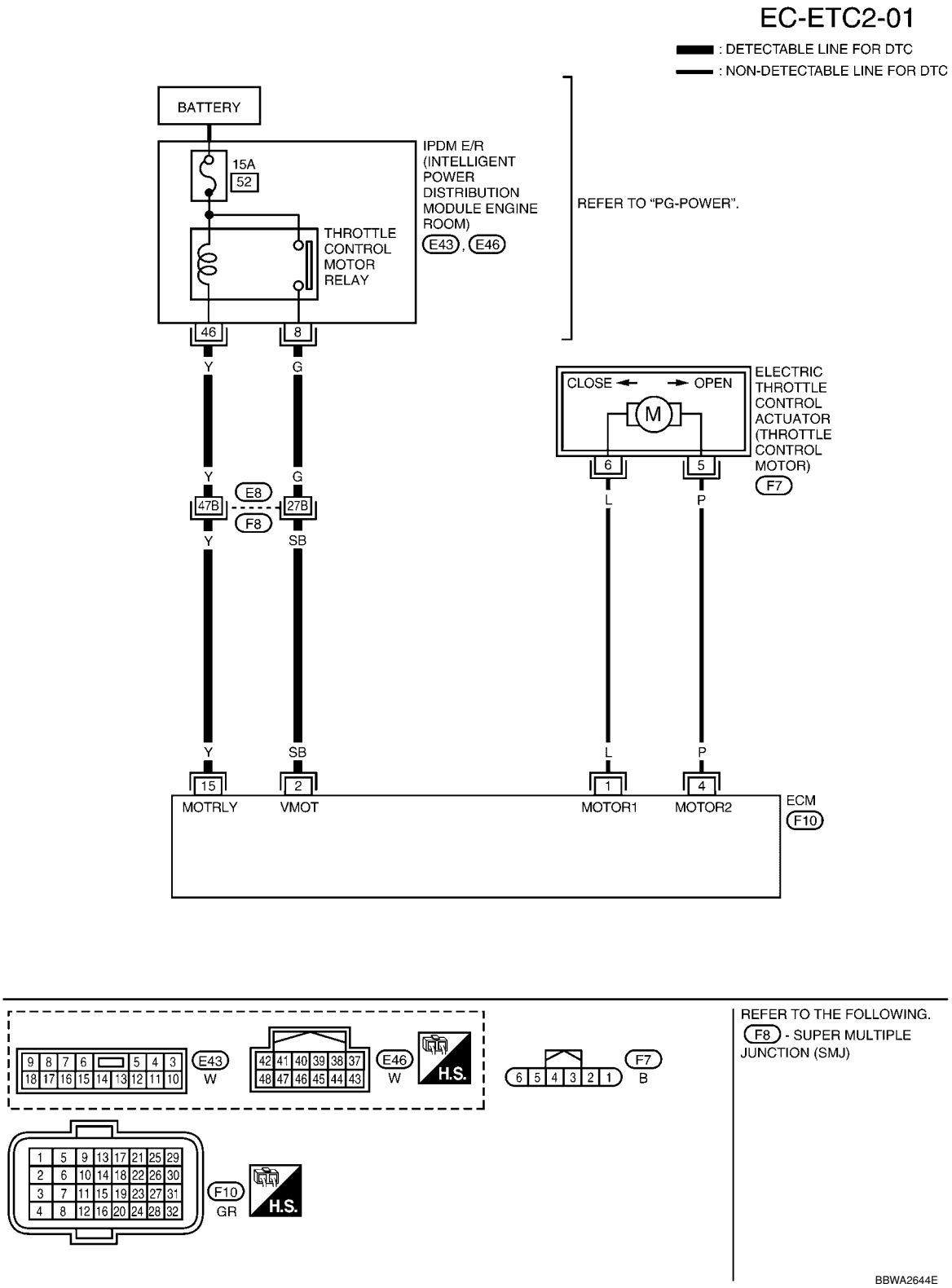

Specification data are reference values and are measured between each terminal and ground.
Pulse signal is measured by CONSULT-II.

CAUTION:

Do not use ECM ground terminals when measuring input/output voltage. Doing so may result in damage to the ECM's transistor. Use a ground other than ECM terminals, such as the ground.

TERMINAL NO.	WIRE COLOR	ITEM	CONDITION	DATA (DC Voltage)
1	L	Throttle control motor (Open)	**[Ignition switch: ON]** • Engine stopped • Shift lever: D (A/T, CVT), 1st (M/T) • Accelerator pedal: Fully depressed	Approximately 3.2V★ 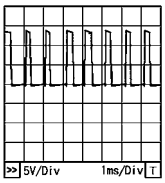 PBIA8150J
2	SB	Throttle control motor power supply	**[Ignition switch: ON]**	BATTERY VOLTAGE (11 - 14V)
4	P	Throttle control motor (Close)	**[Ignition switch: ON]** • Engine stopped • Shift lever: D (A/T, CVT), 1st (M/T) • Accelerator pedal: Fully released	Approximately 1.8V★ 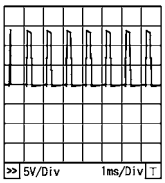 PBIA8149J
15	Y	Throttle control motor relay	**[Ignition switch: OFF]**	BATTERY VOLTAGE (11 - 14V)
			[Ignition switch: ON]	0 - 1.0V

★: Average voltage for pulse signal (Actual pulse signal can be confirmed by oscilloscope.)

Diagnosis Procedure

INFOID:0000000001702990

1. CHECK THROTTLE CONTROL MOTOR RELAY POWER SUPPLY CIRCUIT-I

1. Turn ignition switch OFF.
2. Check voltage between ECM terminal 15 and ground with CONSULT-II or tester.

Voltage: Battery voltage

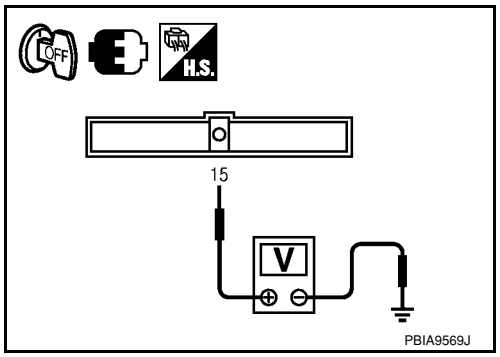

PBIA9569J

OK or NG

OK >> GO TO 5.
NG >> GO TO 2.

2. CHECK THROTTLE CONTROL MOTOR RELAY POWER SUPPLY CIRCUIT-II

1. Disconnect ECM harness connector.
2. Disconnect IPDM E/R harness connector E46.
3. Check continuity between ECM terminal 15 and IPDM E/R terminal 46. Refer to Wiring Diagram.

Continuity should exist.

4. Also check harness for short to ground and short to power.

OK or NG

OK >> GO TO 4.
NG >> GO TO 3.

3. DETECT MALFUNCTIONING PART

Check the following.
- Harness connectors E8, F8
- Harness for open or short between ECM and IPDM E/R

>> Repair open circuit or short to ground or short to power in harness or connectors.

4. CHECK FUSE

1. Disconnect 15A fuse.
2. Check 15A fuse for blown.

OK or NG

OK >> GO TO 8.
NG >> Replace 15A fuse.

5. CHECK THROTTLE CONTROL MOTOR RELAY INPUT SIGNAL CIRCUIT-I

Check voltage between ECM terminal 2 and ground under the following conditions with CONSULT-II or tester.

Ignition switch	Voltage
OFF	Approximately 0V
ON	Battery voltage (11 - 14V)

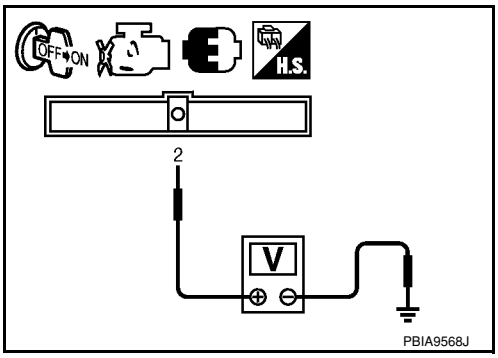

OK or NG

OK >> GO TO 8.
NG >> GO TO 6.

6. CHECK THROTTLE CONTROL MOTOR RELAY INPUT SIGNAL CIRCUIT-II

1. Turn ignition switch OFF.
2. Disconnect ECM harness connector.
3. Disconnect IPDM E/R harness connector E43.
4. Check continuity between ECM terminal 2 and IPDM E/R terminal 8.
   Refer to Wiring Diagram.

Continuity should exist.

5. Also check harness for short to ground and short to power.

OK or NG

OK >> GO TO 8.
NG >> GO TO 7.

7. DETECT MALFUNCTIONING PART

Check the following.
- Harness connectors E8, F8
- Harness for open or short between ECM and IPDM E/R

>> Repair open circuit or short to ground or short to power in harness or connectors.

8. CHECK INTERMITTENT INCIDENT

Refer to EC-136.

OK or NG

OK >> Replace IPDM E/R. Refer to PG-26, "Removal and Installation of IPDM E/R".
NG >> Repair or replace harness or connectors.

DTC P2101 ELECTRIC THROTTLE CONTROL FUNCTION

Description

INFOID:0000000001702991

NOTE:
If DTC P2101 is displayed with DTC P2100 or P2119, first perform the trouble diagnosis for DTC P2100 or P2119. Refer to EC-456or EC-472.
Electric throttle control actuator consists of throttle control motor, throttle position sensor, etc.
The throttle control motor is operated by the ECM and it opens and closes the throttle valve.
The current opening angle of the throttle valve is detected by the throttle position sensor and it provides feedback to the ECM to control the throttle control motor to make the throttle valve opening angle properly in response to driving condition.

On Board Diagnosis Logic

INFOID:0000000001702992

This self-diagnosis has the one trip detection logic.

DTC No.	Trouble diagnosis name	DTC detecting condition	Possible cause
P2101 2101	Electric throttle control performance	Electric throttle control function does not operate properly.	• Harness or connectors (Throttle control motor circuit is open or shorted) • Electric throttle control actuator

FAIL-SAFE MODE

When the malfunction is detected, the ECM enters fail-safe mode and the MIL lights up.

Engine operating condition in fail-safe mode
ECM stops the electric throttle control actuator control, throttle valve is maintained at a fixed opening (approx. 5 degrees) by the return spring.

DTC Confirmation Procedure

INFOID:0000000001702993

NOTE:
If DTC Confirmation Procedure has been previously conducted, always turn ignition switch OFF and wait at least 10 seconds before conducting the next test.
TESTING CONDITION:
Before performing the following procedure, confirm that battery voltage is more than 11V when engine is running.

WITH CONSULT-II

1. Turn ignition switch ON and wait at least 2 seconds.
2. Select “DATA MONITOR” mode with CONSULT-II.
3. Start engine and let it idle for 5 seconds.
4. If DTC is detected, go to EC-463, "Diagnosis Procedure".

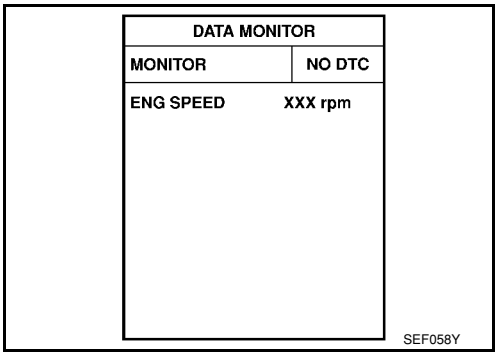

WITH GST

Follow the procedure “WITH CONSULT-II” above.

Wiring Diagram

INFOID:0000000001702994

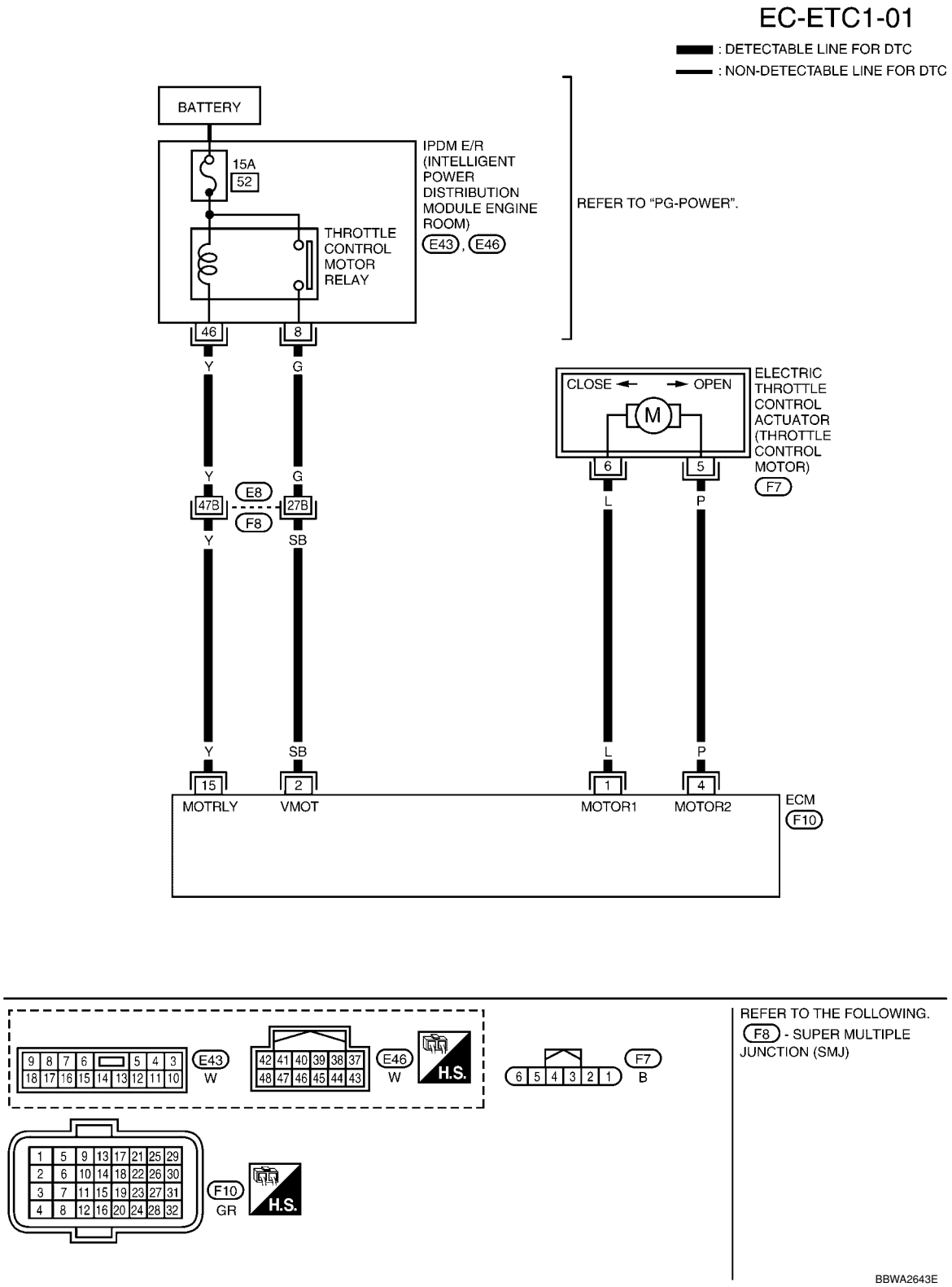

Specification data are reference values and are measured between each terminal and ground.
Pulse signal is measured by CONSULT-II.

CAUTION:

Do not use ECM ground terminals when measuring input/output voltage. Doing so may result in damage to the ECM's transistor. Use a ground other than ECM terminals, such as the ground.

TERMINAL NO.	WIRE COLOR	ITEM	CONDITION	DATA (DC Voltage)
1	L	Throttle control motor (Open)	**[Ignition switch: ON]** • Engine stopped • Shift lever: D (A/T, CVT), 1st (M/T) • Accelerator pedal: Fully depressed	Approximately 3.2V★ 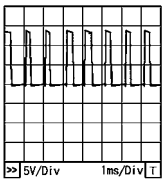 PBIA8150J
2	SB	Throttle control motor power supply	**[Ignition switch: ON]**	BATTERY VOLTAGE (11 - 14V)
4	P	Throttle control motor (Close)	**[Ignition switch: ON]** • Engine stopped • Shift lever: D (A/T, CVT), 1st (M/T) • Accelerator pedal: Fully released	Approximately 1.8V★ 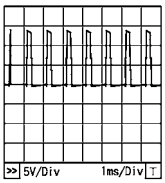 PBIA8149J
15	Y	Throttle control motor relay	**[Ignition switch: OFF]**	BATTERY VOLTAGE (11 - 14V)
			[Ignition switch: ON]	0 - 1.0V

★: Average voltage for pulse signal (Actual pulse signal can be confirmed by oscilloscope.)

Diagnosis Procedure

INFOID:0000000001702995

1. CHECK GROUND CONNECTIONS

1. Turn ignition switch OFF.
2. Loosen and retighten ground screw on the body.
   Refer to EC-142, "Ground Inspection".

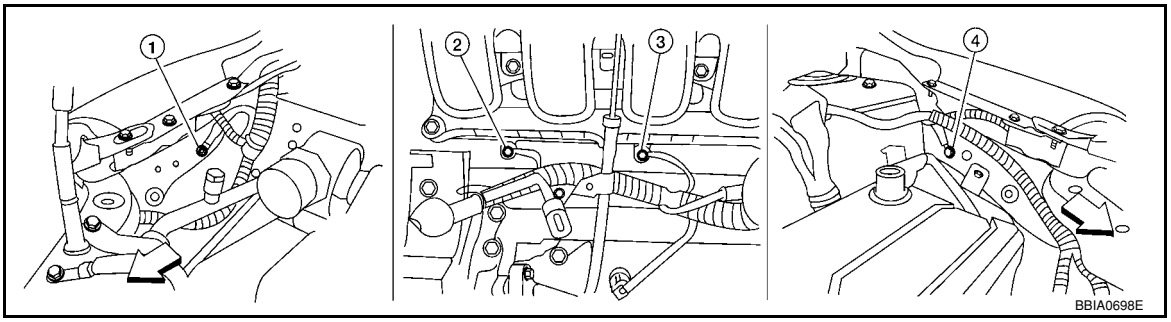

⇦: Vehicle front

1. Body ground E24
2. Engine ground F9
3. Engine ground F16
4. Body ground E15

OK or NG

OK >> GO TO 2.
NG >> Repair or replace ground connections.

2. CHECK THROTTLE CONTROL MOTOR RELAY INPUT SIGNAL CIRCUIT-I

Check voltage between ECM terminal 2 and ground under the following conditions with CONSULT-II or tester.

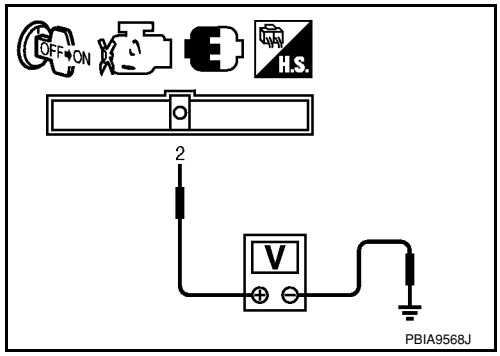

Ignition switch	Voltage
OFF	Approximately 0V
ON	Battery voltage (11 - 14V)

OK or NG

OK >> GO TO 10.
NG >> GO TO 3.

3. CHECK THROTTLE CONTROL MOTOR RELAY INPUT SIGNAL CIRCUIT-II

1. Turn ignition switch OFF.
2. Disconnect ECM harness connector.
3. Disconnect IPDM E/R harness connector E43.
4. Check continuity between ECM terminal 2 and IPDM E/R terminal 8.
   Refer to Wiring Diagram.

Continuity should exist.

5. Also check harness for short to ground and short to power.

OK or NG

OK >> GO TO 5.
NG >> GO TO 4.

4. DETECT MALFUNCTIONING PART

Check the following.
- Harness connectors E8, F8
- Harness for open or short between ECM and IPDM E/R

>> Repair open circuit or short to ground or short to power in harness or connectors.

5. CHECK THROTTLE CONTROL MOTOR RELAY POWER SUPPLY CIRCUIT-I

1. Reconnect all harness connectors disconnected.
2. Check voltage between ECM terminal 15 and ground with CONSULT-II or tester.

Voltage: Battery voltage

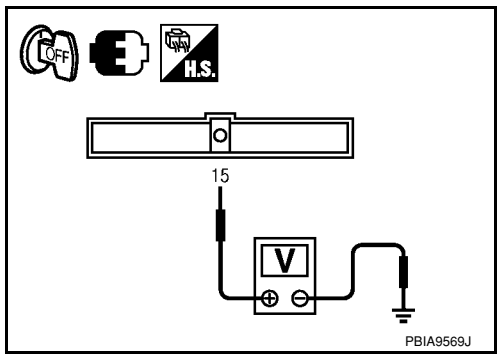

OK or NG

OK >> GO TO 9.
NG >> GO TO 6.

6. CHECK THROTTLE CONTROL MOTOR RELAY POWER SUPPLY CIRCUIT-II

1. Disconnect ECM harness connector.
2. Disconnect IPDM E/R harness connector E46.
3. Check harness continuity between ECM terminal 15 and IPDM E/R terminal 46.
   Refer to Wiring Diagram.

Continuity should exist.

4. Also check harness for short to ground and short to power.

OK or NG

OK >> GO TO 8.
NG >> GO TO 7.

7. DETECT MALFUNCTIONING PART

Check the following.
- Harness connectors E8, F8
- Harness for open or short between ECM and IPDM E/R

>> Repair open circuit or short to ground or short to power in harness or connectors.

8. CHECK FUSE

1. Disconnect 15A fuse.
2. Check 15A fuse for blown.

OK or NG

OK >> GO TO 9.
NG >> Replace 15A fuse.

9. CHECK INTERMITTENT INCIDENT

Refer to EC-136.

OK or NG

OK >> Replace IPDM E/R. Refer to PG-26, "Removal and Installation of IPDM E/R".
NG >> Repair or replace harness or connectors.

10. CHECK THROTTLE CONTROL MOTOR OUTPUT SIGNAL CIRCUIT FOR OPEN OR SHORT

1. Turn ignition switch OFF.
2. Disconnect electric throttle control actuator (1) harness connector.
- ⇦: Vehicle front
3. Disconnect ECM harness connector.
4. Check harness continuity between the following terminals. Refer to Wiring Diagram.

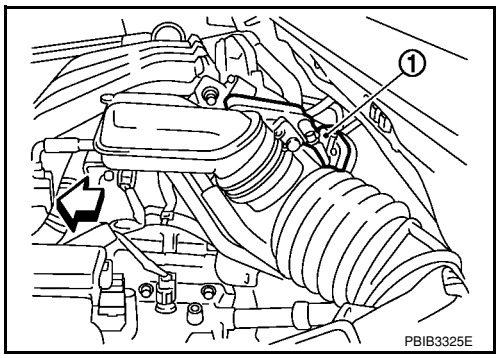

Electric throttle control actuator terminal	ECM terminal	Continuity
5	1	Should not exist.
	4	Should exist.
6	1	Should exist.
	4	Should not exist.

5. Also check harness for short to ground and short to power.

OK or NG

OK >> GO TO 11.
NG >> Repair or replace.

11. CHECK ELECTRIC THROTTLE CONTROL ACTUATOR VISUALLY

1. Remove the intake air duct.
2. Check if foreign matter is caught between the throttle valve (1) and the housing.
- ⇦: Vehicle front

OK or NG

OK >> GO TO 12.
NG >> Remove the foreign matter and clean the electric throttle control actuator inside.

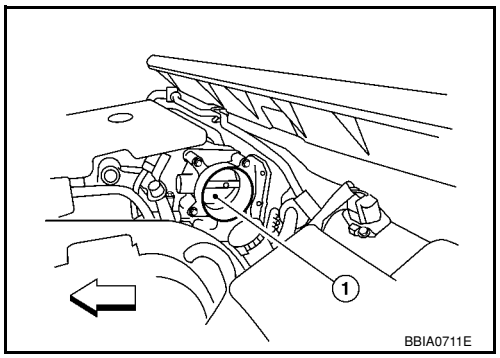

12. CHECK THROTTLE CONTROL MOTOR

Refer to EC-466, "Component Inspection".

OK or NG

OK >> GO TO 13.
NG >> GO TO 14.

13. CHECK INTERMITTENT INCIDENT

Refer to EC-136.

OK or NG

OK >> GO TO 14.
NG >> Repair or replace harness or connectors.

14. REPLACE ELECTRIC THROTTLE CONTROL ACTUATOR

1. Replace the electric throttle control actuator.
2. Perform EC-76, "Throttle Valve Closed Position Learning".
3. Perform EC-76, "Idle Air Volume Learning".

>> **INSPECTION END**

Component Inspection

INFOID:0000000001702996

THROTTLE CONTROL MOTOR

1. Disconnect electric throttle control actuator harness connector.
2. Check resistance between terminals 5 and 6.

Resistance: Approximately 1 - 15 Ω [at 25 °C (77°F)]

3. If NG, replace electric throttle control actuator and go to next step.
4. Perform EC-76, "Throttle Valve Closed Position Learning".
5. Perform EC-76, "Idle Air Volume Learning".

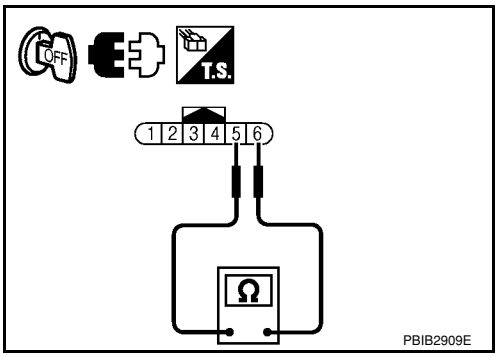

Removal and Installation

INFOID:0000000001702997

ELECTRIC THROTTLE CONTROL ACTUATOR

Refer to EM-18.

DTC P2118 THROTTLE CONTROL MOTOR

Component Description

INFOID:0000000001702998

The throttle control motor is operated by the ECM and it opens and closes the throttle valve.
The current opening angle of the throttle valve is detected by the throttle position sensor and it provides feedback to the ECM to control the throttle control motor to make the throttle valve opening angle properly in response to driving condition.

On Board Diagnosis Logic

INFOID:0000000001702999

This self-diagnosis has the one trip detection logic.

DTC No.	Trouble diagnosis name	DTC detecting condition	Possible cause
P2118 2118	Throttle control motor circuit short	ECM detects short in both circuits between ECM and throttle control motor.	• Harness or connectors (Throttle control motor circuit is shorted.) • Electric throttle control actuator (Throttle control motor)

FAIL-SAFE MODE
When the malfunction is detected, ECM enters fail-safe mode and the MIL lights up.

Engine operating condition in fail-safe mode
ECM stops the electric throttle control actuator control, throttle valve is maintained at a fixed opening (approx. 5 degrees) by the return spring.

DTC Confirmation Procedure

INFOID:0000000001703000

NOTE:
If DTC Confirmation Procedure has been previously conducted, always turn ignition switch OFF and wait at least 10 seconds before conducting the next test.

WITH CONSULT-II

1. Turn ignition switch ON and wait at least 2 seconds.
2. Select “DATA MONITOR” mode with CONSULT-II.
3. Start engine and let it idle for 5 seconds.
4. If DTC is detected, go to EC-469, "Diagnosis Procedure".

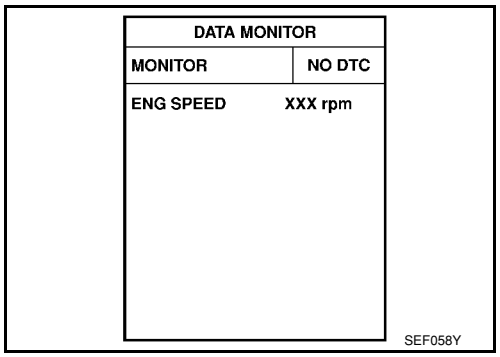

WITH GST

Follow the procedure “WITH CONSULT-II” above.

Wiring Diagram

INFOID:0000000001703001

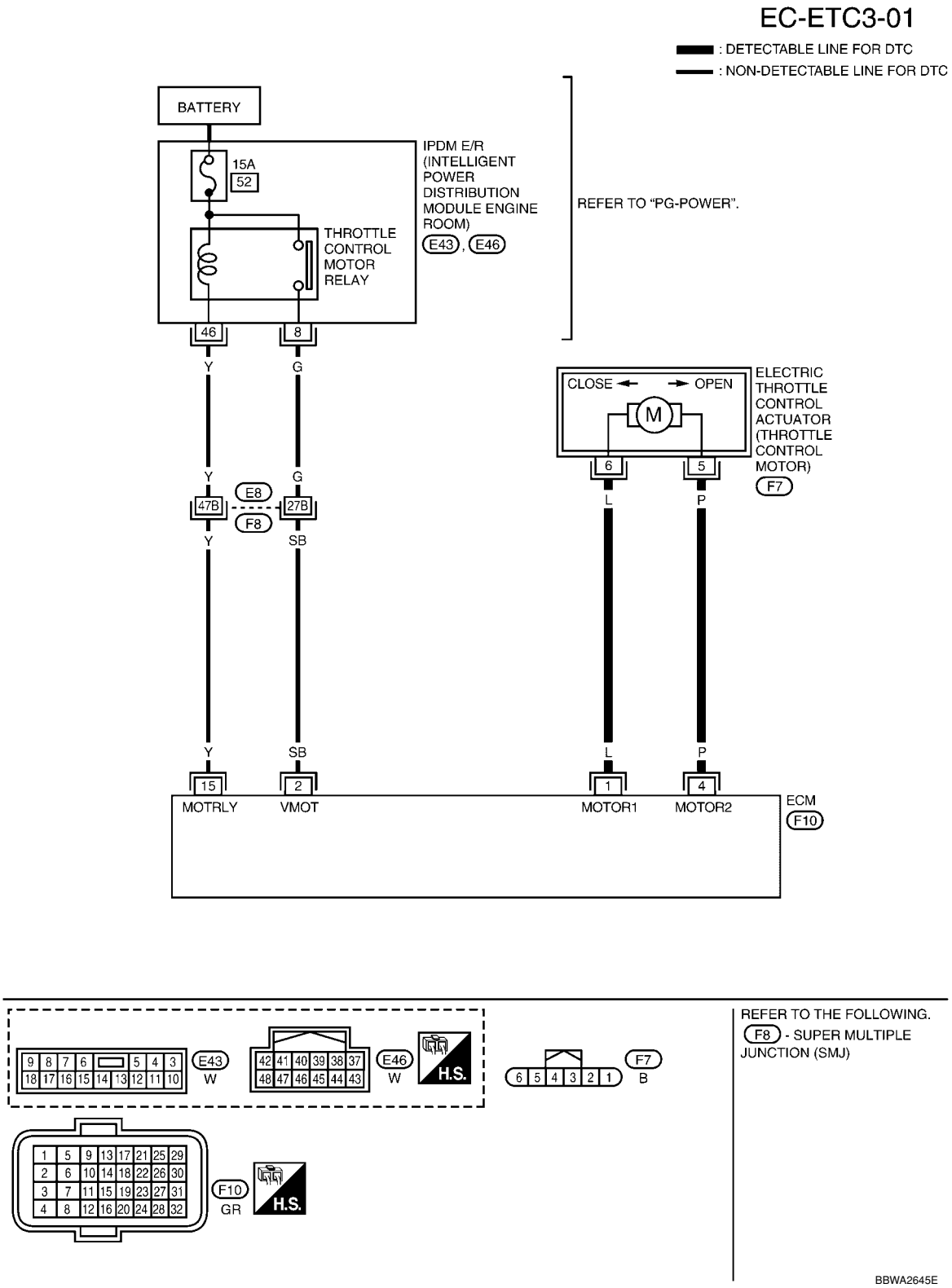

Specification data are reference values and are measured between each terminal and ground.
Pulse signal is measured by CONSULT-II.

CAUTION:

Do not use ECM ground terminals when measuring input/output voltage. Doing so may result in damage to the ECM's transistor. Use a ground other than ECM terminals, such as the ground.

TERMINAL NO.	WIRE COLOR	ITEM	CONDITION	DATA (DC Voltage)
1	L	Throttle control motor (Open)	**[Ignition switch: ON]** • Engine stopped • Shift lever: D (A/T, CVT), 1st (M/T) • Accelerator pedal: Fully depressed	Approximately 3.2V★ 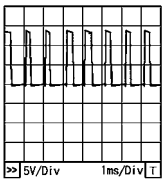 PBIA8150J
2	SB	Throttle control motor power supply	**[Ignition switch: ON]**	BATTERY VOLTAGE (11 - 14V)
4	P	Throttle control motor (Close)	**[Ignition switch: ON]** • Engine stopped • Shift lever: D (A/T, CVT), 1st (M/T) • Accelerator pedal: Fully released	Approximately 1.8V★ 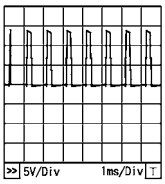 PBIA8149J
15	Y	Throttle control motor relay	**[Ignition switch: OFF]**	BATTERY VOLTAGE (11 - 14V)
			[Ignition switch: ON]	0 - 1.0V

★: Average voltage for pulse signal (Actual pulse signal can be confirmed by oscilloscope.)

Diagnosis Procedure

INFOID:0000000001703002

1. CHECK GROUND CONNECTIONS

1. Turn ignition switch OFF.
2. Loosen and retighten engine screw on the body.
   Refer to EC-142, "Ground Inspection".

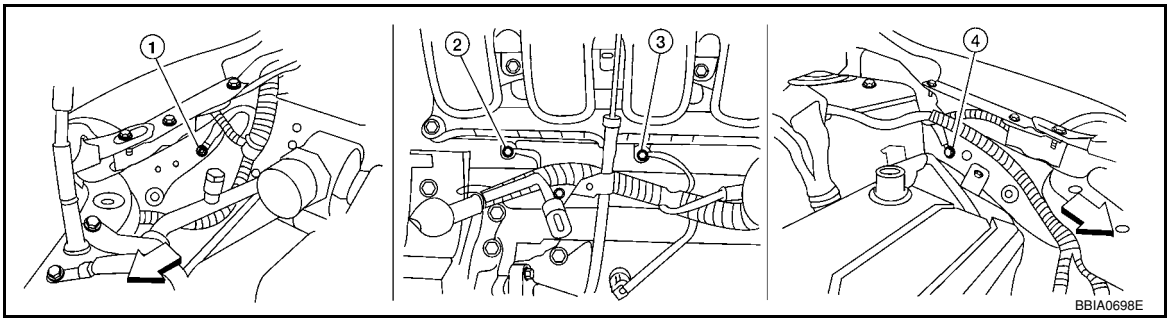

⇦: Vehicle front

1. Body ground E24
2. Engine ground F9
3. Engine ground F16
4. Body ground E15

OK or NG

OK >> GO TO 2.
NG >> Repair or replace ground connections.

2. CHECK THROTTLE CONTROL MOTOR OUTPUT SIGNAL CIRCUIT FOR OPEN OR SHORT

1. Disconnect electric throttle control actuator (1) harness connector.
- ⇦: Vehicle front
2. Disconnect ECM harness connector.
3. Check harness continuity between the following terminals. Refer to Wiring Diagram.

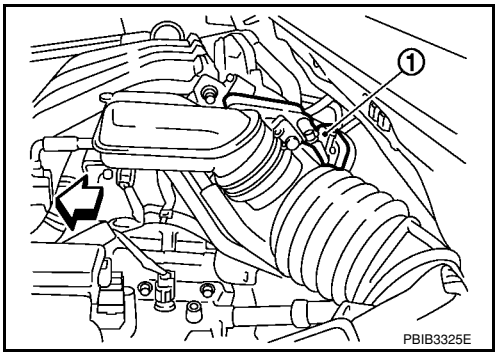

Electric throttle control actuator terminal	ECM terminal	Continuity
5	1	Should not exist.
	4	Should exist.
6	1	Should exist.
	4	Should not exist.

4. Also check harness for short to ground and short to power.

OK or NG

OK >> GO TO 3.
NG >> Repair open circuit or short to ground or short to power in harness or connectors.

3. CHECK THROTTLE CONTROL MOTOR

Refer to EC-470, "Component Inspection".

OK or NG

OK >> GO TO 4.
NG >> GO TO 5.

4. CHECK INTERMITTENT INCIDENT

Refer to EC-136.

OK or NG

OK >> GO TO 5.
NG >> Repair or replace harness or connectors.

5. REPLACE ELECTRIC THROTTLE CONTROL ACTUATOR

1. Replace the electric throttle control actuator.
2. Perform EC-76, "Throttle Valve Closed Position Learning".
3. Perform EC-76, "Idle Air Volume Learning".

>> **INSPECTION END**

Component Inspection

INFOID:0000000001703003

THROTTLE CONTROL MOTOR

1. Disconnect electric throttle control actuator harness connector.
2. Check resistance between terminals 5 and 6.

Resistance: Approximately 1 - 15 Ω [at 25 °C (77°F)]

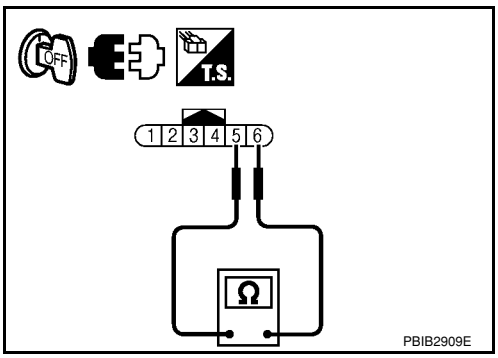

3. If NG, replace electric throttle control actuator and go to next step.
4. Perform EC-76, "Throttle Valve Closed Position Learning".
5. Perform EC-76, "Idle Air Volume Learning".

Removal and Installation

INFOID:0000000001703004

ELECTRIC THROTTLE CONTROL ACTUATOR

Refer to EM-18.

DTC P2119 ELECTRIC THROTTLE CONTROL ACTUATOR

Component Description

INFOID:0000000001703005

Electric throttle control actuator consists of throttle control motor, throttle position sensor, etc.
The throttle control motor is operated by the ECM and it opens and closes the throttle valve.
The throttle position sensor detects the throttle valve position, and the opening and closing speed of the throttle valve and feeds the voltage signals to the ECM. The ECM judges the current opening angle of the throttle valve from these signals and the ECM controls the throttle control motor to make the throttle valve opening angle properly in response to driving condition.

On Board Diagnosis Logic

INFOID:0000000001703006

This self-diagnosis has the one trip detection logic.

DTC No.	Trouble diagnosis name	DTC detecting condition		Possible cause
P2119 2119	Electric throttle control actuator	A)	Electric throttle control actuator does not function properly due to the return spring malfunction.	• Electric throttle control actuator
		B)	Throttle valve opening angle in fail-safe mode is not in specified range.	
		C)	ECM detects the throttle valve is stuck open.	

FAIL-SAFE MODE

When the malfunction is detected, ECM enters fail-safe mode and the MIL lights up.

Detected items	Engine operating condition in fail-safe mode
Malfunction A	ECM controls the electric throttle actuator by regulating the throttle opening around the idle position. The engine speed will not rise more than 2,000 rpm.
Malfunction B	ECM controls the electric throttle control actuator by regulating the throttle opening to 20 degrees or less.
Malfunction C	While the vehicle is driving, it slows down gradually by fuel cut. After the vehicle stops, the engine stalls. The engine can restart in N or P position (A/T, CVT), neutral (M/T), and engine speed will not exceed 1,000 rpm or more.

DTC Confirmation Procedure

INFOID:0000000001703007

NOTE:
- **Perform PROCEDURE FOR MALFUNCTION A AND B first. If the DTC cannot be confirmed, perform PROCEDURE FOR MALFUNCTION C.**
- If DTC Confirmation Procedure has been previously conducted, always turn ignition switch OFF and wait at least 10 seconds before conducting the next test.

PROCEDURE FOR MALFUNCTION A AND B

With CONSULT-II

1. Turn ignition switch ON and wait at least 1 second.
2. Select “DATA MONITOR” mode with CONSULT-II.
3. Set shift lever to D position (A/T, CVT) or 1st position (M/T), and wait at least 3 seconds.
4. Set shift lever to P position (A/T, CVT) or Neutral position (M/T).
5. Turn ignition switch OFF and wait at least 10 seconds.
6. Turn ignition switch ON and wait at least 1 second.
7. Set shift lever to D position (A/T, CVT) or 1st position (M/T), and wait at least 3 seconds.
8. Set shift lever to P position (A/T, CVT) or Neutral position (M/T).
9. Turn ignition switch OFF, wait at least 10 seconds, and then turn ON.

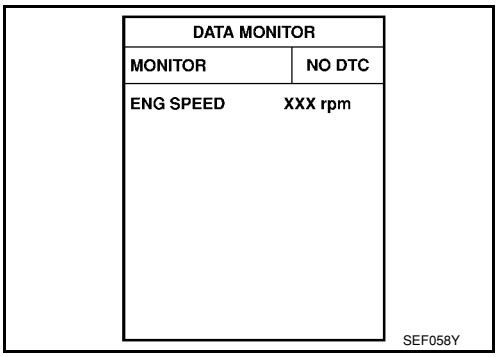

10. If DTC is detected, go to EC-473, "Diagnosis Procedure".

With GST
Follow the procedure “With CONSULT-II” above.

PROCEDURE FOR MALFUNCTION C

With CONSULT-II

1. Turn ignition switch ON and wait at least 1 second.
2. Select “DATA MONITOR” mode with CONSULT-II.
3. Set shift lever to D position (A/T, CVT) or 1st position (M/T) and wait at least 3 seconds.
4. Set shift lever to N, P position (A/T, CVT) or Neutral (M/T) position.
5. Start engine and let it idle for 3 seconds.
6. If DTC is detected, go to EC-473, "Diagnosis Procedure".

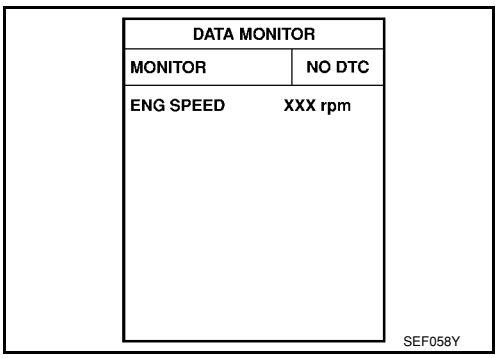

With GST
Follow the procedure “With CONSULT-II” above.

Diagnosis Procedure

INFOID:0000000001703008

1. CHECK ELECTRIC THROTTLE CONTROL ACTUATOR VISUALLY

1. Turn ignition switch OFF.
2. Remove the intake air duct.
3. Check if a foreign matter is caught between the throttle valve (1) and the housing.

- ⇦: Vehicle front

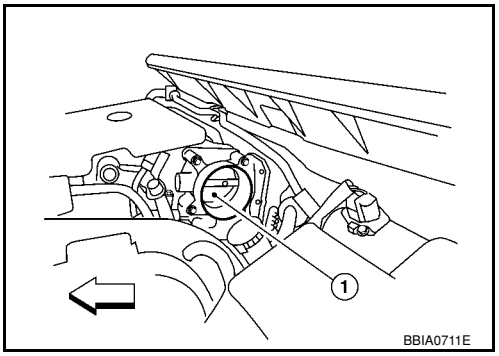

OK or NG

OK >> GO TO 2.
NG >> Remove the foreign matter and clean the electric throttle control actuator inside.

2. REPLACE ELECTRIC THROTTLE CONTROL ACTUATOR

1. Replace the electric throttle control actuator.
2. Perform EC-76, "Throttle Valve Closed Position Learning".
3. Perform EC-76, "Idle Air Volume Learning".

>> **INSPECTION END**

DTC P2122, P2123 APP SENSOR

Component Description

INFOID:0000000001703009

The accelerator pedal position sensor is installed on the upper end of the accelerator pedal assembly. The sensor detects the accelerator position and sends a signal to the ECM.
Accelerator pedal position sensor has two sensors. These sensors are a kind of potentiometers which transform the accelerator pedal position into output voltage, and emit the voltage signal to the ECM. In addition, these sensors detect the opening and closing speed of the accelerator pedal and feed the voltage signals to the ECM. The ECM judges the current opening angle of the accelerator pedal from these signals and controls the throttle control motor based on these signals.

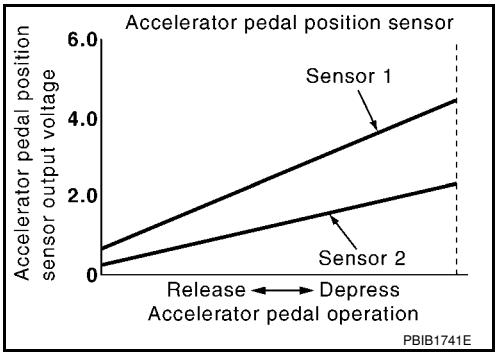

Idle position of the accelerator pedal is determined by the ECM receiving the signal from the accelerator pedal position sensor. The ECM uses this signal for the engine operation such as fuel cut.

CONSULT-II Reference Value in Data Monitor Mode

INFOID:0000000001703010

Specification data are reference values.

MONITOR ITEM	CONDITION		SPECIFICATION
ACCEL SEN 1	• Ignition switch: ON (Engine stopped)	Accelerator pedal: Fully released	0.6 - 0.9V
		Accelerator pedal: Fully depressed	4.0 - 4.8V
ACCEL SEN 2*	• Ignition switch: ON (Engine stopped)	Accelerator pedal: Fully released	0.6 - 0.9V
		Accelerator pedal: Fully depressed	3.9 - 4.8V
CLSD THL POS	• Ignition switch: ON (Engine stopped)	Accelerator pedal: Fully released	ON
		Accelerator pedal: Slightly depressed	OFF

*: Accelerator pedal position sensor 2 signal is converted by ECM internally. Thus, it differs from ECM terminal voltage.

On Board Diagnosis Logic

INFOID:0000000001703011

These self-diagnoses have the one trip detection logic.
NOTE:
If DTC P2122 or P2123 is displayed with DTC P0643, first perform the trouble diagnosis for DTC P0643. Refer to EC-400.

DTC No.	Trouble diagnosis name	DTC detecting condition	Possible cause
P2122 2122	Accelerator pedal position sensor 1 circuit low input	An excessively low voltage from the APP sensor 1 is sent to ECM.	• Harness or connectors (APP sensor 1 circuit is open or shorted.) • Accelerator pedal position sensor (APP sensor 1)
P2123 2123	Accelerator pedal position sensor 1 circuit high input	An excessively high voltage from the APP sensor 1 is sent to ECM.	

FAIL-SAFE MODE

When the malfunction is detected, ECM enters fail-safe mode and the MIL lights up.

Engine operating condition in fail-safe mode
The ECM controls the electric throttle control actuator in regulating the throttle opening in order for the idle position to be within +10 degrees. The ECM regulates the opening speed of the throttle valve to be slower than the normal condition. So, the acceleration will be poor.

DTC Confirmation Procedure

INFOID:0000000001703012

NOTE:

If DTC Confirmation Procedure has been previously conducted, always turn ignition switch OFF and wait at least 10 seconds before conducting the next test.

TESTING CONDITION:

Before performing the following procedure, confirm that battery voltage is more than 8V at idle.

WITH CONSULT-II

1. Turn ignition switch ON.
2. Select “DATA MONITOR” mode with CONSULT-II.
3. Start engine and let it idle for 1 second.
4. If DTC is detected, go to EC-477, "Diagnosis Procedure".

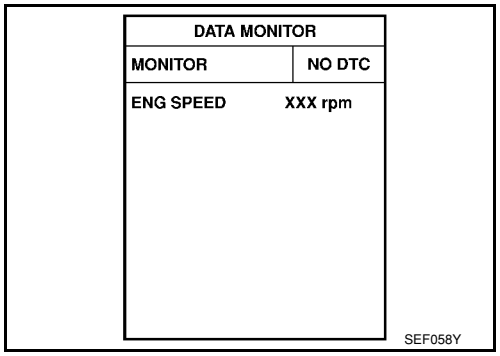

WITH GST

Follow the procedure “WITH CONSULT-II” above.

Wiring Diagram

INFOID:0000000001703013

EC-APPS1-01

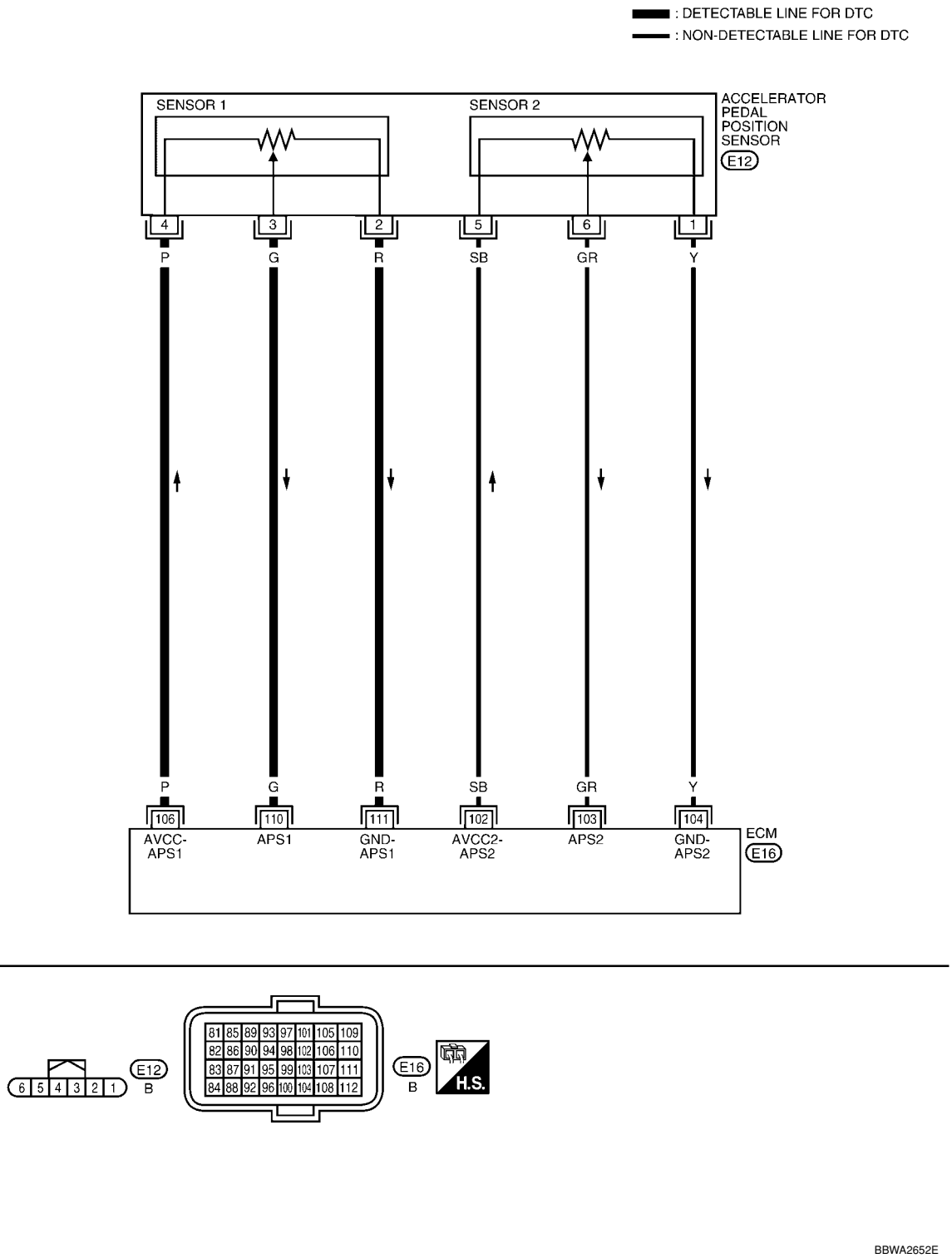

Specification data are reference values and are measured between each terminal and ground.

CAUTION:

Do not use ECM ground terminals when measuring input/output voltage. Doing so may result in damage to the ECM's transistor. Use a ground other than ECM terminals, such as the ground.

TERMINAL NO.	WIRE COLOR	ITEM	CONDITION	DATA (DC Voltage)
102	SB	Sensor power supply (APP sensor 2)	**[Ignition switch: ON]**	Approximately 5V
103	GR	Accelerator pedal position sensor 2	**[Ignition switch: ON]** • Engine stopped • Accelerator pedal: Fully released	0.3 - 0.6V
			[Ignition switch: ON] • Engine stopped • Accelerator pedal: Fully depressed	1.95 - 2.4V
104	Y	Sensor ground (APP sensor 2)	**[Engine is running]** • **Warm-up condition** • Idle speed	Approximately 0V
106	P	Sensor power supply (APP sensor 1)	**[Ignition switch: ON]**	Approximately 5V
110	G	Accelerator pedal position sensor 1	**[Ignition switch: ON]** • Engine stopped • Accelerator pedal: Fully released	0.6 - 0.9V
			[Ignition switch: ON] • Engine stopped • Accelerator pedal: Fully depressed	3.9 - 4.7V
111	R	Sensor ground (APP sensor 1)	**[Engine is running]** • **Warm-up condition** • Idle speed	Approximately 0V

Diagnosis Procedure

INFOID:0000000001703014

1. CHECK GROUND CONNECTIONS

1. Turn ignition switch OFF.
2. Loosen and retighten ground screw on the body.
   Refer to EC-142, "Ground Inspection".

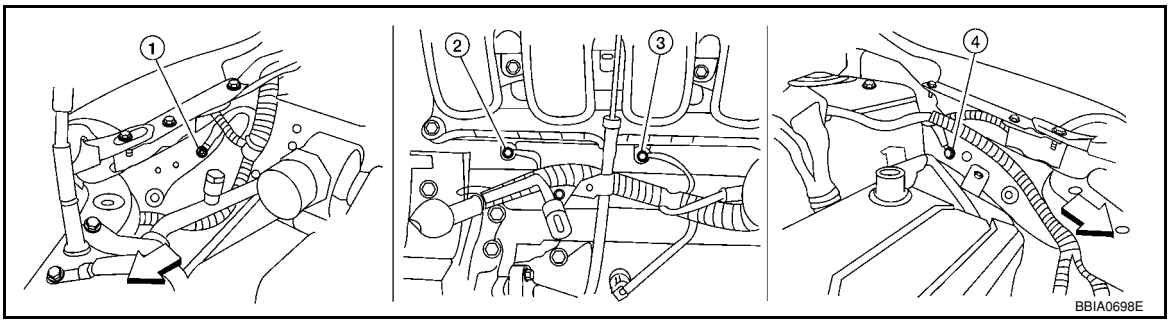

⇦: Vehicle front

1. Body ground E24
2. Engine ground F9
3. Engine ground F16
4. Body ground E15

OK or NG

OK >> GO TO 2.
NG >> Repair or replace ground connections.

2. CHECK APP SENSOR 1 POWER SUPPLY CIRCUIT

1. Disconnect accelerator pedal position (APP) sensor (1) harness connector.
2. Turn ignition switch ON.

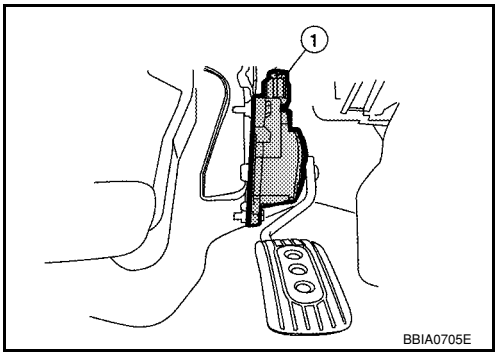

3. Check voltage between APP sensor terminal 4 and ground with CONSULT-II or tester.

Voltage: Approximately 5V

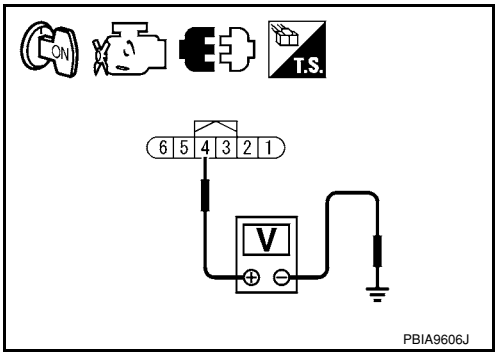

OK or NG

OK >> GO TO 3.
NG >> Repair open circuit or short to ground or short to power in harness or connectors.

3. CHECK APP SENSOR 1 GROUND CIRCUIT FOR OPEN AND SHORT

1. Turn ignition switch OFF.
2. Disconnect ECM harness connector.
3. Check harness continuity between ECM terminal 111 and APP sensor terminal 2. Refer to Wiring Diagram.

Continuity should exist.

4. Also check harness for short to ground and short to power.

OK or NG

OK >> GO TO 4.
NG >> Repair open circuit or short to ground or short to power in harness or connectors.

4. CHECK APP SENSOR 1 INPUT SIGNAL CIRCUIT FOR OPEN AND SHORT

1. Check harness continuity between ECM terminal 110 and APP sensor terminal 3. Refer to Wiring Diagram.

Continuity should exist.

2. Also check harness for short to ground and short to power.

OK or NG

OK >> GO TO 5.
NG >> Repair open circuit or short to ground or short to power in harness or connectors.

5. CHECK APP SENSOR

Refer to EC-479, "Component Inspection".

OK or NG

OK >> GO TO 7.
NG >> GO TO 6.

6. REPLACE ACCELERATOR PEDAL ASSEMBLY

1. Replace accelerator pedal assembly.
2. Perform EC-76, "Accelerator Pedal Released Position Learning".
3. Perform EC-76, "Throttle Valve Closed Position Learning".
4. Perform EC-76, "Idle Air Volume Learning".

>> **INSPECTION END**

7. CHECK INTERMITTENT INCIDENT

Refer to EC-136.

>> **INSPECTION END**

Component Inspection

INFOID:0000000001703015

ACCELERATOR PEDAL POSITION SENSOR

1. Reconnect all harness connectors disconnected.
2. Turn ignition switch ON.
3. Check voltage between ECM terminals 110 (APP sensor 1 signal), 103 (APP sensor 2 signal) and ground under the following conditions.

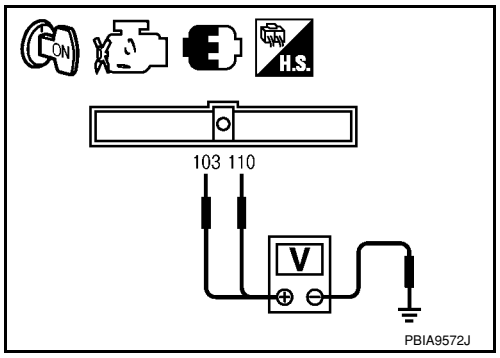

Terminal	Accelerator pedal	Voltage
110 (Accelerator pedal position sensor 1)	Fully released	0.6 - 0.9V
	Fully depressed	3.9 - 4.7V
103 (Accelerator pedal position sensor 2)	Fully released	0.3 - 0.6V
	Fully depressed	1.95 - 2.4V

4. If NG, replace accelerator pedal assembly and go to next step.
5. Perform EC-76, "Accelerator Pedal Released Position Learning".
6. Perform EC-76, "Throttle Valve Closed Position Learning".
7. Perform EC-76, "Idle Air Volume Learning".

Removal and Installation

INFOID:0000000001703016

ACCELERATOR PEDAL

Refer to ACC-3.

DTC P2127, P2128 APP SENSOR

Component Description

INFOID:0000000001703017

The accelerator pedal position sensor is installed on the upper end of the accelerator pedal assembly. The sensor detects the accelerator position and sends a signal to the ECM.
Accelerator pedal position sensor has two sensors. These sensors are a kind of potentiometers which transform the accelerator pedal position into output voltage, and emit the voltage signal to the ECM. In addition, these sensors detect the opening and closing speed of the accelerator pedal and feed the voltage signals to the ECM. The ECM judges the current opening angle of the accelerator pedal from these signals and controls the throttle control motor based on these signals.

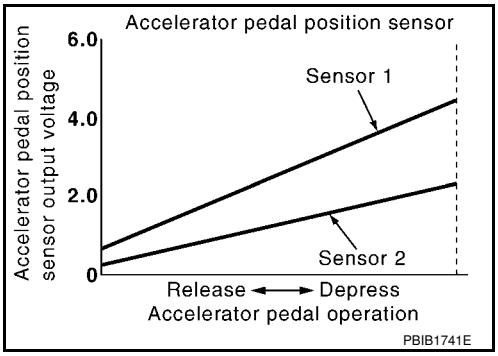

Idle position of the accelerator pedal is determined by the ECM receiving the signal from the accelerator pedal position sensor. The ECM uses this signal for the engine operation such as fuel cut.

CONSULT-II Reference Value in Data Monitor Mode

INFOID:0000000001703018

Specification data are reference values.

MONITOR ITEM	CONDITION		SPECIFICATION
ACCEL SEN 1	• Ignition switch: ON (Engine stopped)	Accelerator pedal: Fully released	0.6 - 0.9V
		Accelerator pedal: Fully depressed	4.0 - 4.8V
ACCEL SEN 2*	• Ignition switch: ON (Engine stopped)	Accelerator pedal: Fully released	0.6 - 0.9V
		Accelerator pedal: Fully depressed	3.9 - 4.8V
CLSD THL POS	• Ignition switch: ON (Engine stopped)	Accelerator pedal: Fully released	ON
		Accelerator pedal: Slightly depressed	OFF

*: Accelerator pedal position sensor 2 signal is converted by ECM internally. Thus, it differs from ECM terminal voltage.

On Board Diagnosis Logic

INFOID:0000000001703019

These self-diagnoses have the one trip detection logic.

DTC No.	Trouble diagnosis name	DTC detecting condition	Possible cause
P2127 2127	Accelerator pedal position sensor 2 circuit low input	An excessively low voltage from the APP sensor 2 is sent to ECM.	• Harness or connectors (APP sensor 2 circuit is open or shorted.) [Crankshaft position sensor (POS) circuit is shorted.] (EVAP control system pressure sensor circuit is shorted.) (Refrigerant pressure sensor circuit is shorted.) • EVAP control system pressure sensor • Accelerator pedal position sensor (APP sensor 2) • Crankshaft position sensor (POS) • Refrigerant pressure sensor
P2128 2128	Accelerator pedal position sensor 2 circuit high input	An excessively high voltage from the APP sensor 2 is sent to ECM.	

FAIL-SAFE MODE

When the malfunction is detected, ECM enters fail-safe mode and the MIL lights up.

Engine operating condition in fail-safe mode
The ECM controls the electric throttle control actuator in regulating the throttle opening in order for the idle position to be within +10 degrees. The ECM regulates the opening speed of the throttle valve to be slower than the normal condition. So, the acceleration will be poor.

DTC Confirmation Procedure

INFOID:0000000001703020

NOTE:
If DTC Confirmation Procedure has been previously conducted, always turn ignition switch OFF and wait at least 10 seconds before conducting the next test.
TESTING CONDITION:
Before performing the following procedure, confirm that battery voltage is more than 8V at idle.

WITH CONSULT-II

1. Turn ignition switch ON.
2. Select “DATA MONITOR” mode with CONSULT-II.
3. Start engine and let it idle for 1 second.
4. If DTC is detected, go to EC-483, "Diagnosis Procedure".

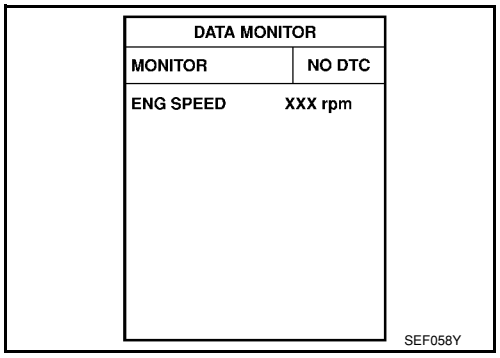

WITH GST

Follow the procedure “WITH CONSULT-II” above.

Wiring Diagram

INFOID:0000000001703021

EC-APPS2-01

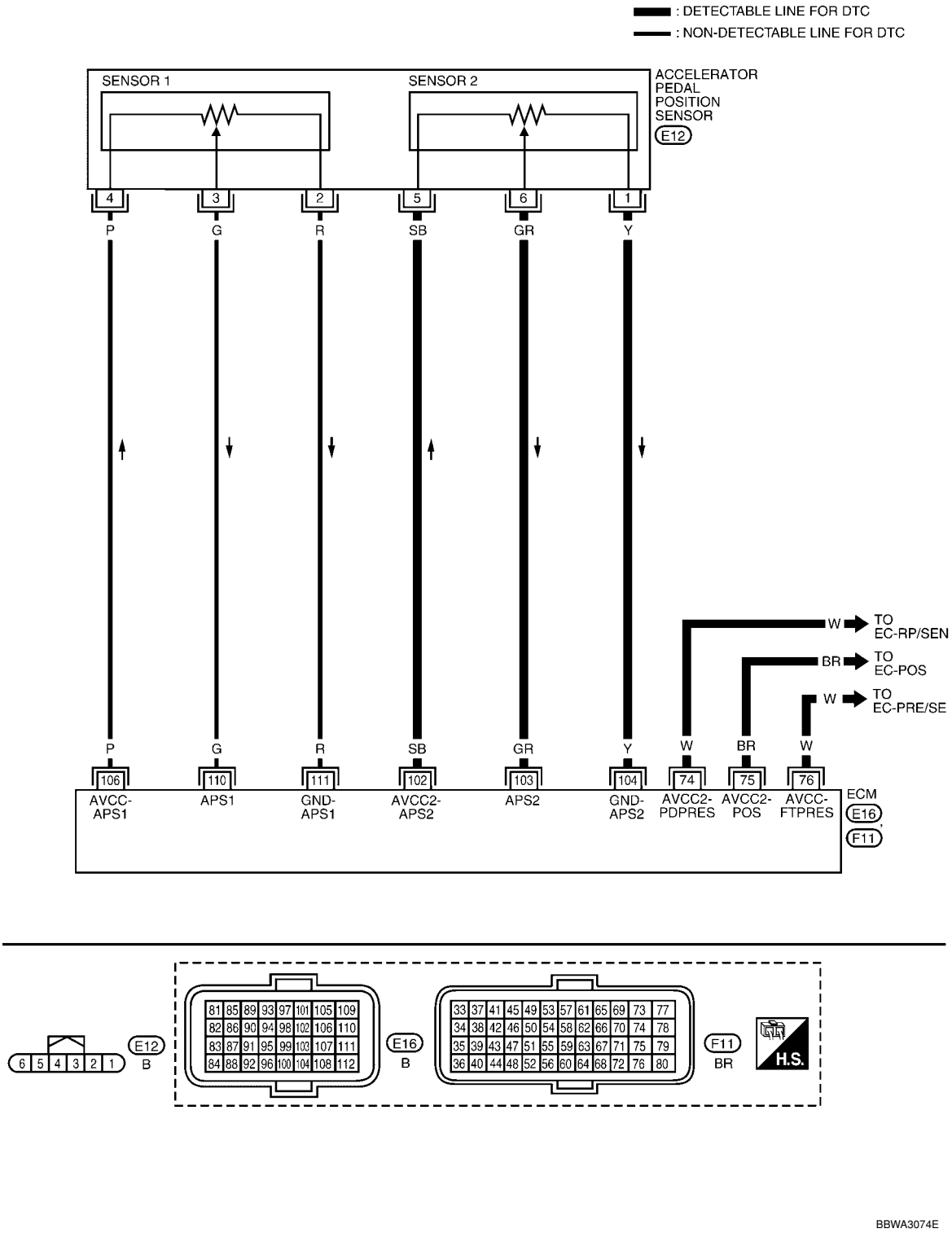

Specification data are reference values and are measured between each terminal and ground.

CAUTION:

Do not use ECM ground terminals when measuring input/output voltage. Doing so may result in damage to the ECM's transistor. Use a ground other than ECM terminals, such as the ground.

TERMINAL NO.	WIRE COLOR	ITEM	CONDITION	DATA (DC Voltage)
74	W	Sensor power supply (Refrigerant pressure sensor)	**[Ignition switch: ON]**	Approximately 5V
75	BR	Sensor power supply [Crankshaft position sensor (POS)]	**[Ignition switch: ON]**	Approximately 5V
76	W	EVAP control system pressure sensor power supply	**[Ignition switch: ON]**	Approximately 5V
102	SB	Sensor power supply (APP sensor 2)	**[Ignition switch: ON]**	Approximately 5V
103	GR	Accelerator pedal position sensor 2	**[Ignition switch: ON]** • Engine stopped • Accelerator pedal: Fully released	0.3 - 0.6V
			[Ignition switch: ON] • Engine stopped • Accelerator pedal: Fully depressed	1.95 - 2.4V
104	Y	Sensor ground (APP sensor 2)	**[Engine is running]** • **Warm-up condition** • Idle speed	Approximately 0V
106	P	Sensor power supply (APP sensor 1)	**[Ignition switch: ON]**	Approximately 5V
110	G	Accelerator pedal position sensor 1	**[Ignition switch: ON]** • Engine stopped • Accelerator pedal: Fully released	0.6 - 0.9V
			[Ignition switch: ON] • Engine stopped • Accelerator pedal: Fully depressed	3.9 - 4.7V
111	R	Sensor ground (APP sensor 1)	**[Engine is running]** • **Warm-up condition** • Idle speed	Approximately 0V

Diagnosis Procedure

INFOID:0000000001703022

1. CHECK GROUND CONNECTIONS

1. Turn ignition switch OFF.
2. Loosen and retighten ground screws on the body.
   Refer to EC-142, "Ground Inspection".

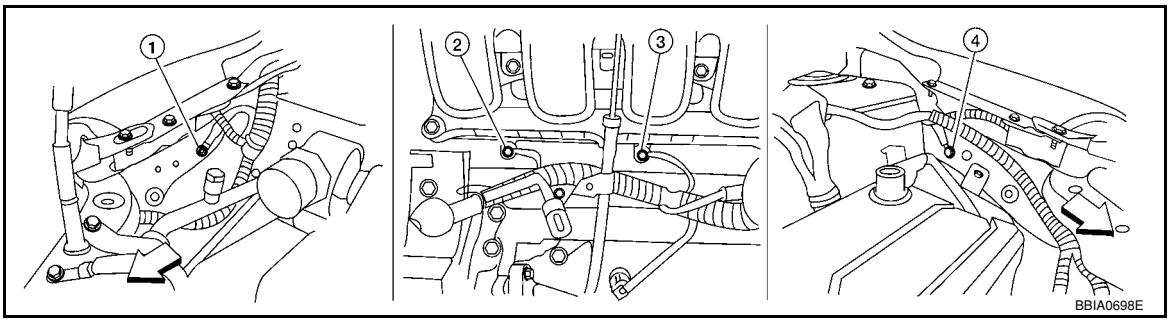

⇦: Vehicle front

1. Body ground E24
2. Engine ground F9
3. Engine ground F16
4. Body ground E15

OK or NG

OK >> GO TO 2.
NG >> Repair or replace ground connections.

2. CHECK APP SENSOR 2 POWER SUPPLY CIRCUIT-I

1. Disconnect accelerator pedal position (APP) sensor (1) harness connector.
2. Turn ignition switch ON.

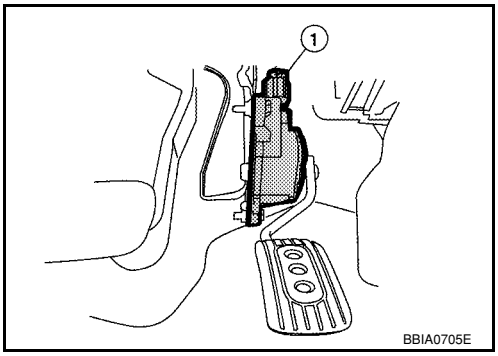

3. Check voltage between APP sensor terminal 5 and ground with CONSULT-II or tester.

Voltage: Approximately 5V

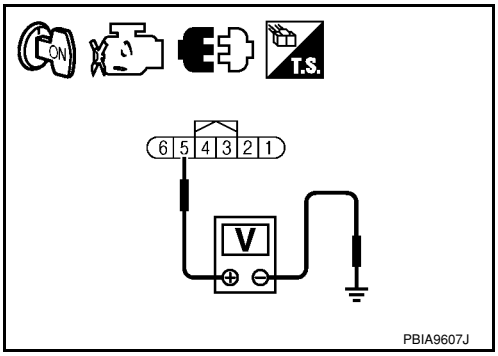

OK or NG

OK >> GO TO 6.
NG >> GO TO 3.

3. CHECK APP SENSOR 2 POWER SUPPLY CIRCUIT-II

1. Turn ignition switch OFF.
2. Disconnect ECM harness connector.
3. Check harness continuity between APP sensor terminal 5 and ECM terminal 102. Refer to Wiring Diagram.

Continuity should exist.

OK or NG

OK >> GO TO 4.
NG >> Repair open circuit or short to ground or short to power in harness or connectors.

4. CHECOMPONENTS POWER SUPPLY CIRCUIT

Check harness for short to power and short to ground, between the following terminals.

ECM terminal	Sensor terminal	Reference Wiring Diagram
74	Refrigerant pressure sensor terminal 3	EC-542, "Wiring Diagram"
75	Crankshaft position sensor (POS) terminal 1	EC-297, "Wiring Diagram"
76	EVAP control system pressure sensor terminal 3	EC-357, "Wiring Diagram"
102	APP sensor terminal 5	EC-482, "Wiring Diagram"

OK or NG

OK >> GO TO 5.
NG >> Repair short to ground or short to power in harness or connectors.

5. CHECK COMPONENTS

Check the following.
- Crankshaft position sensor (POS) (Refer to EC-301, "Component Inspection".)
- EVAP control system pressure sensor (Refer to EC-353, "Component Inspection".)

- Refrigerant pressure sensor (Refer to MTC-22.)

OK or NG

OK >> GO TO 10.
NG >> Replace malfunctioning component.

6. CHECK APP SENSOR 2 GROUND CIRCUIT FOR OPEN AND SHORT

1. Turn ignition switch OFF.
2. Disconnect ECM harness connector.
3. Check harness continuity between ECM terminal 104 and APP sensor terminal 1.
   Refer to Wiring Diagram.

   Continuity should exist.

4. Also check harness for short to ground and short to power.

OK or NG

OK >> GO TO 7.
NG >> Repair open circuit or short to ground or short to power in harness or connectors.

7. CHECK APP SENSOR 2 INPUT SIGNAL CIRCUIT FOR OPEN AND SHORT

1. Check harness continuity between ECM terminal 103 and APP sensor terminal 6.
   Refer to Wiring Diagram.

   Continuity should exist.

2. Also check harness for short to ground and short to power.

OK or NG

OK >> GO TO 8.
NG >> Repair open circuit or short to ground or short to power in harness or connectors.

8. CHECK APP SENSOR

Refer to EC-485, "Component Inspection".

OK or NG

OK >> GO TO 10.
NG >> GO TO 9.

9. REPLACE ACCELERATOR PEDAL ASSEMBLY

1. Replace accelerator pedal assembly.
2. Perform EC-76, "Accelerator Pedal Released Position Learning".
3. Perform EC-76, "Throttle Valve Closed Position Learning".
4. Perform EC-76, "Idle Air Volume Learning".

>> **INSPECTION END**

10. CHECK INTERMITTENT INCIDENT

Refer to EC-136.

>> **INSPECTION END**

Component Inspection

INFOID:0000000001703023

ACCELERATOR PEDAL POSITION SENSOR

1. Reconnect all harness connectors disconnected.
2. Turn ignition switch ON.

3. Check voltage between ECM terminals 110 (APP sensor 1 signal), 103 (APP sensor 2 signal) and ground under the following conditions.

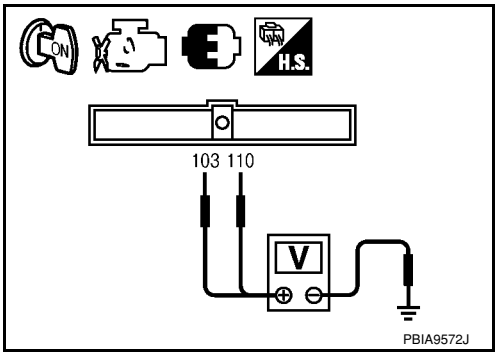

Terminal	Accelerator pedal	Voltage
110 (Accelerator pedal position sensor 1)	Fully released	0.6 - 0.9V
	Fully depressed	3.9 - 4.7V
103 (Accelerator pedal position sensor 2)	Fully released	0.3 - 0.6V
	Fully depressed	1.95 - 2.4V

4. If NG, replace accelerator pedal assembly and go to next step.
5. Perform EC-76, "Accelerator Pedal Released Position Learning".
6. Perform EC-76, "Throttle Valve Closed Position Learning".
7. Perform EC-76, "Idle Air Volume Learning".

Removal and Installation

INFOID:0000000001703024

ACCELERATOR PEDAL

Refer to ACC-3.

DTC P2135 TP SENSOR

Component Description

INFOID:0000000001703025

Electric throttle control actuator consists of throttle control motor, throttle position sensor, etc. The throttle position sensor responds to the throttle valve movement.
The throttle position sensor has two sensors. These sensors are a kind of potentiometers which transform the throttle valve position into output voltage, and emit the voltage signal to the ECM. In addition, these sensors detect the opening and closing speed of the throttle valve and feed the voltage signals to the ECM. The ECM judges the current opening angle of the throttle valve from these signals and the ECM controls the throttle control motor to make the throttle valve opening angle properly in response to driving condition.

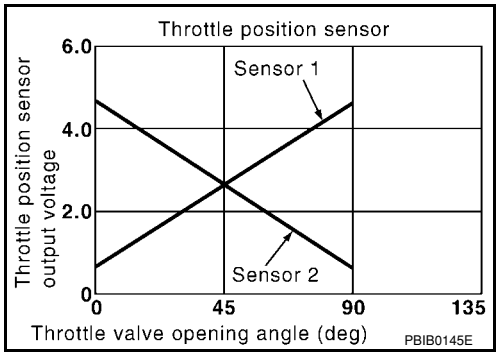

CONSULT-II Reference Value in Data Monitor Mode

INFOID:0000000001703026

Specification data are reference values.

MONITOR ITEM	CONDITION		SPECIFICATION
THRTL SEN 1 THRTL SEN 2*	• Ignition switch: ON (Engine stopped)	Accelerator pedal: Fully released	More than 0.36V
	• Shift lever: D (A/T, CVT), 1st (M/T)	Accelerator pedal: Fully depressed	Less than 4.75V

*: Throttle position sensor 2 signal is converted by ECM internally. Thus, it differs from ECM terminal voltage signal.

On Board Diagnosis Logic

INFOID:0000000001703027

This self-diagnosis has the one trip detection logic.
NOTE:
If DTC P2135 is displayed with DTC P0643, first perform the trouble diagnosis for DTC P0643.
Refer to EC-400.

DTC No.	Trouble diagnosis name	DTC detecting condition	Possible cause
P2135 2135	Throttle position sensor circuit range/performance	Rationally incorrect voltage is sent to ECM compared with the signals from TP sensor 1 and TP sensor 2.	• Harness or connector (TP sensor 1 and 2 circuit is open or short-ed.) • Electric throttle control actuator (TP sensor 1 and 2)

FAIL-SAFE MODE

When the malfunction is detected, the ECM enters fail-safe mode and the MIL lights up.

Engine operation condition in fail-safe mode
The ECM controls the electric throttle control actuator in regulating the throttle opening in order for the idle position to be within +10 degrees. The ECM regulates the opening speed of the throttle valve to be slower than the normal condition. So, the acceleration will be poor.

DTC Confirmation Procedure

INFOID:0000000001703028

NOTE:
If DTC Confirmation Procedure has been previously conducted, always turn ignition switch OFF and wait at least 10 seconds before conducting the next test.
TESTING CONDITION:
Before performing the following procedure, confirm that battery voltage is more than 8V at idle.

WITH CONSULT-II

1. Turn ignition switch ON.

2. Select “DATA MONITOR” mode with CONSULT-II.
3. Start engine and let it idle for 1 second.
4. If DTC is detected, go to EC-490, "Diagnosis Procedure".

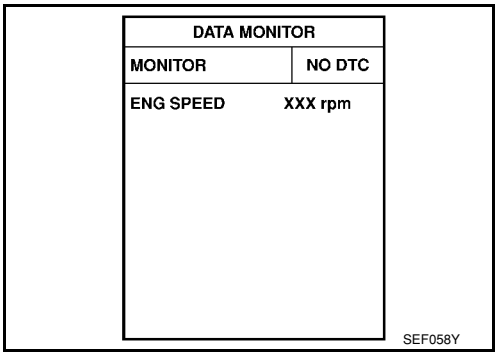

WITH GST

Follow the procedure “WITH CONSULT-II” above.

Wiring Diagram

INFOID:0000000001703029

EC-TPS3-01

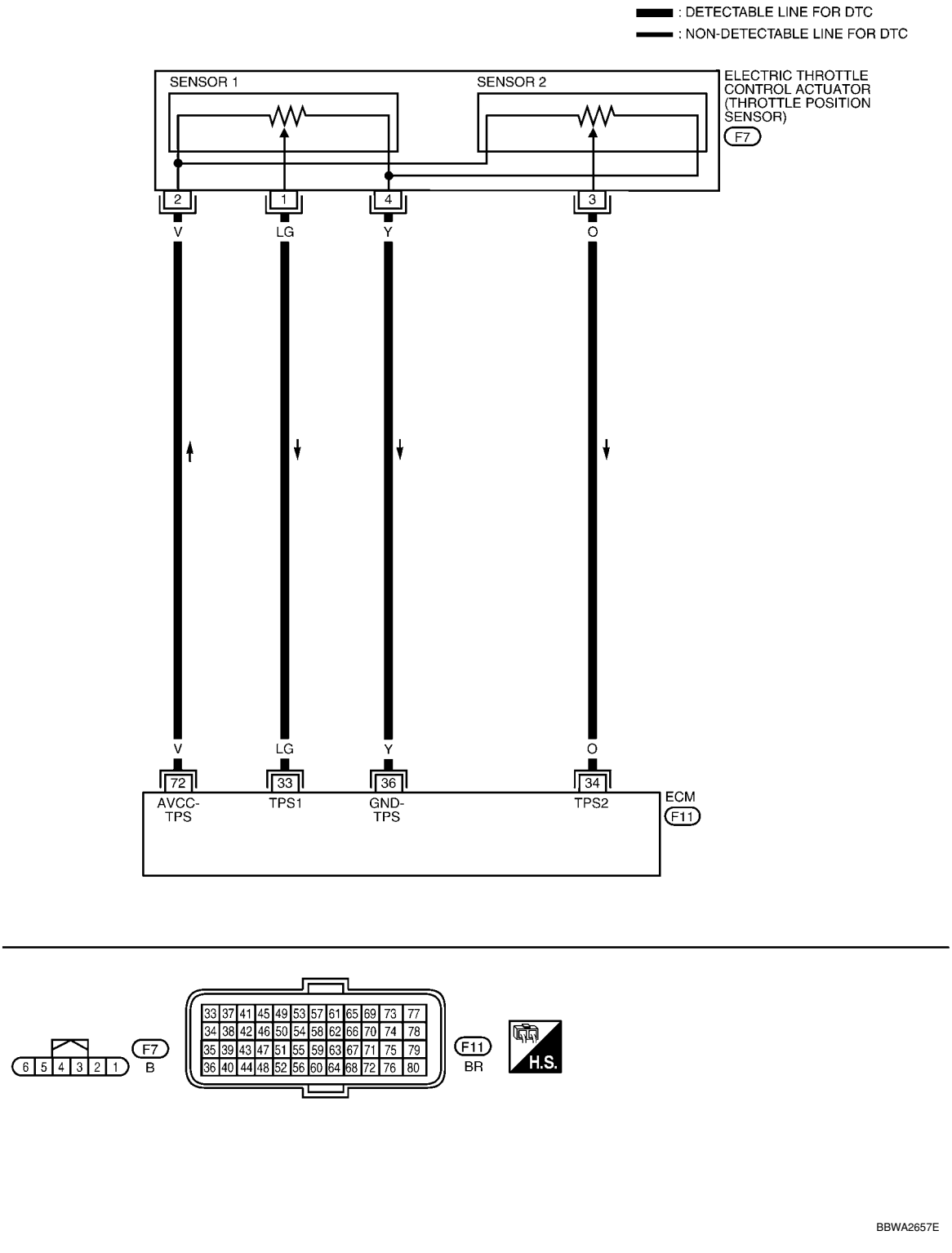

Specification data are reference values and are measured between each terminal and ground.

CAUTION:

Do not use ECM ground terminals when measuring input/output voltage. Doing so may result in damage to the ECM's transistor. Use a ground other than ECM terminals, such as the ground.

TERMINAL NO.	WIRE COLOR	ITEM	CONDITION	DATA (DC Voltage)
33	LG	Throttle position sensor 1	**[Ignition switch: ON]** • Engine stopped • Shift lever: D (A/T, CVT), 1st (M/T) • Accelerator pedal: Fully released	More than 0.36V
			[Ignition switch: ON] • Engine stopped • Shift lever: D (A/T, CVT), 1st (M/T) • Accelerator pedal: Fully depressed	Less than 4.75V
34	O	Throttle position sensor 2	**[Ignition switch: ON]** • Engine stopped • Shift lever: D (A/T, CVT), 1st (M/T) • Accelerator pedal: Fully released	Less than 4.75V
			[Ignition switch: ON] • Engine stopped • Shift lever: D (A/T, CVT), 1st (M/T) • Accelerator pedal: Fully depressed	More than 0.36V
36	Y	Sensor ground (Throttle position sensor)	**[Engine is running]** • **Warm-up condition** • Idle speed	Approximately 0V
72	V	Sensor power supply (Throttle position sensor)	**[Ignition switch: ON]**	Approximately 5V

Diagnosis Procedure

INFOID:0000000001703030

1. CHECK GROUND CONNECTIONS

1. Turn ignition switch OFF.
2. Loosen and retighten ground screw on the body.
   Refer to EC-142, "Ground Inspection".

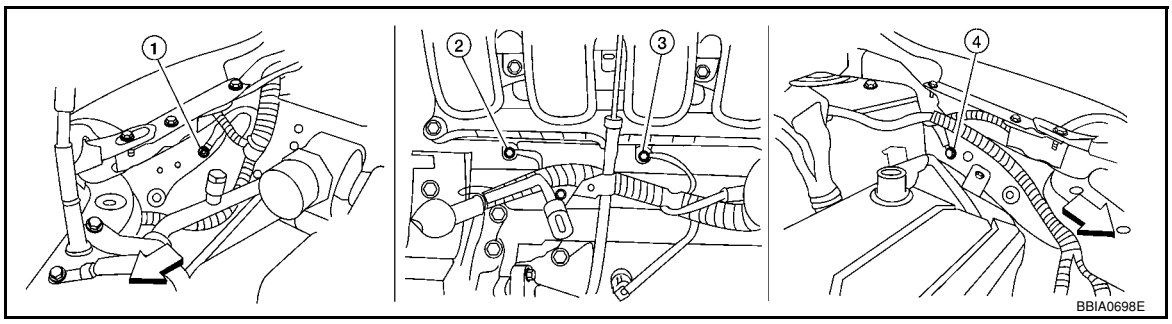

⇦: Vehicle front

1. Body ground E24
2. Engine ground F9
3. Engine ground F16
4. Body ground E15

OK or NG

OK >> GO TO 2.
NG >> Repair or replace ground connections.

2. CHECK THROTTLE POSITION SENSOR POWER SUPPLY CIRCUIT

1. Disconnect electric throttle control actuator (1) harness connector.
- ⇦: Vehicle front
2. Turn ignition switch ON.

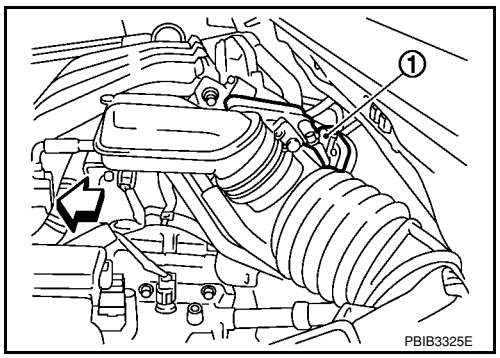

3. Check voltage between electric throttle control actuator terminal 2 and ground with CONSULT-II or tester.

Voltage: Approximately 5V

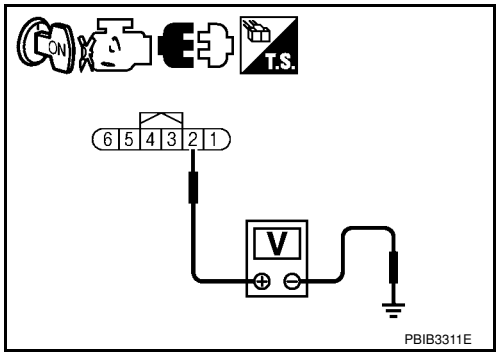

OK or NG

OK >> GO TO 3.
NG >> Repair open circuit or short to ground or short to power in harness or connectors.

3. CHECK THROTTLE POSITION SENSOR GROUND CIRCUIT FOR OPEN AND SHORT

1. Turn ignition switch OFF.
2. Disconnect ECM harness connector.
3. Check harness continuity between electric throttle control actuator terminal 4 and ECM terminal 36. Refer to Wiring Diagram.

Continuity should exist.

4. Also check harness for short to ground and short to power.

OK or NG

OK >> GO TO 4.
NG >> Repair open circuit or short to ground or short to power in harness or connectors.

4. CHECK THROTTLE POSITION SENSOR INPUT SIGNAL CIRCUIT FOR OPEN AND SHORT

1. Check harness continuity between the following;
electric throttle control actuator terminal 1 and ECM terminal 33,
electric throttle control actuator terminal 3 and ECM terminal 34.
Refer to Wiring Diagram.

Continuity should exist.

2. Also check harness for short to ground and short to power.

OK or NG

OK >> GO TO 5.
NG >> Repair open circuit or short to ground or short to power in harness or connectors.

5. CHECK THROTTLE POSITION SENSOR

Refer to EC-492, "Component Inspection".

OK or NG

OK >> GO TO 7.
NG >> GO TO 6.

6. REPLACE ELECTRIC THROTTLE CONTROL ACTUATOR

1. Replace the electric throttle control actuator.
2. Perform EC-76, "Throttle Valve Closed Position Learning".

3. Perform EC-76, "Idle Air Volume Learning".

>> **INSPECTION END**

7. CHECK INTERMITTENT INCIDENT

Refer to EC-136.

>> **INSPECTION END**

Component Inspection

INFOID:0000000001703031

THROTTLE POSITION SENSOR

1. Reconnect all harness connectors disconnected.
2. Perform EC-76, "Throttle Valve Closed Position Learning".
3. Turn ignition switch ON.
4. Set shift lever to D position (A/T, CVT) or 1st position (M/T).
5. Check voltage between ECM terminals 33 (TP sensor 1 signal), 34 (TP sensor 2 signal) and ground under the following conditions.

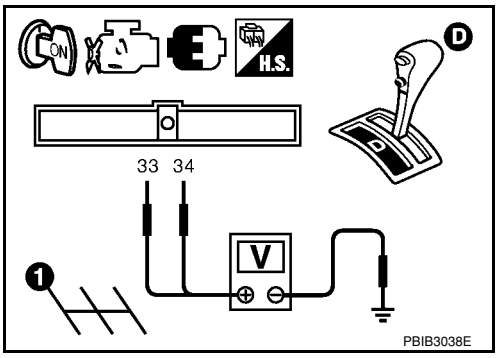

Terminal	Accelerator pedal	Voltage
33 (Throttle position sensor 1)	Fully released	More than 0.36V
	Fully depressed	Less than 4.75V
34 (Throttle position sensor 2)	Fully released	Less than 4.75V
	Fully depressed	More than 0.36V

6. If NG, replace electric throttle control actuator and go to the next step.
7. Perform EC-76, "Throttle Valve Closed Position Learning".
8. Perform EC-76, "Idle Air Volume Learning".

Removal and Installation

INFOID:0000000001703032

ELECTRIC THROTTLE CONTROL ACTUATOR

Refer to EM-18.

DTC P2138 APP SENSOR

Component Description

INFOID:0000000001703033

The accelerator pedal position sensor is installed on the upper end of the accelerator pedal assembly. The sensor detects the accelerator position and sends a signal to the ECM.
Accelerator pedal position sensor has two sensors. These sensors are a kind of potentiometers which transform the accelerator pedal position into output voltage, and emit the voltage signal to the ECM. In addition, these sensors detect the opening and closing speed of the accelerator pedal and feed the voltage signals to the ECM. The ECM judges the current opening angle of the accelerator pedal from these signals and controls the throttle control motor based on these signals.

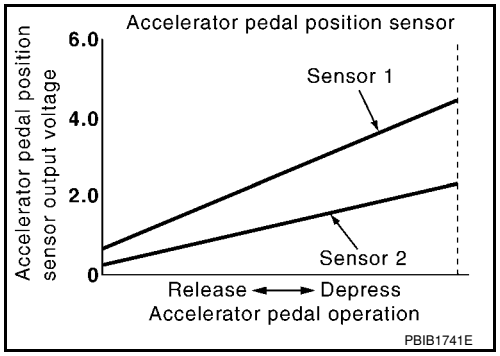

Idle position of the accelerator pedal is determined by the ECM receiving the signal from the accelerator pedal position sensor. The ECM uses this signal for the engine operation such as fuel cut.

CONSULT-II Reference Value in Data Monitor Mode

INFOID:0000000001703034

Specification data are reference values.

MONITOR ITEM	CONDITION		SPECIFICATION
ACCEL SEN 1	• Ignition switch: ON (Engine stopped)	Accelerator pedal: Fully released	0.6 - 0.9V
		Accelerator pedal: Fully depressed	4.0 - 4.8V
ACCEL SEN 2*	• Ignition switch: ON (Engine stopped)	Accelerator pedal: Fully released	0.6 - 0.9V
		Accelerator pedal: Fully depressed	3.9 - 4.8V
CLSD THL POS	• Ignition switch: ON (Engine stopped)	Accelerator pedal: Fully released	ON
		Accelerator pedal: Slightly depressed	OFF

*: Accelerator pedal position sensor 2 signal is converted by ECM internally. Thus, it differs from ECM terminal voltage.

On Board Diagnosis Logic

INFOID:0000000001703035

This self-diagnosis has the one trip detection logic.
NOTE:
If DTC P2138 is displayed with DTC P0643, first perform the trouble diagnosis for DTC P0643. Refer to EC-400.

DTC No.	Trouble diagnosis name	DTC detecting condition	Possible cause
P2138 2138	Accelerator pedal position sensor circuit range/performance	Rationally incorrect voltage is sent to ECM compared with the signals from APP sensor 1 and APP sensor 2.	• Harness or connector (APP sensor 1 and 2 circuit is open or shorted.) [Crankshaft position sensor (POS) circuit is shorted.] (EVAP control system pressure sensor circuit is shorted.) (Refrigerant pressure sensor circuit is shorted.) • Accelerator pedal position sensor (APP sensor 1 and 2) • Crankshaft position sensor (POS) • EVAP control system pressure sensor • Refrigerant pressure sensor

FAIL-SAFE MODE

When the malfunction is detected, ECM enters fail-safe mode and the MIL lights up.

Engine operating condition in fail-safe mode
The ECM controls the electric throttle control actuator in regulating the throttle opening in order for the idle position to be within +10 degrees. The ECM regulates the opening speed of the throttle valve to be slower than the normal condition. So, the acceleration will be poor.

DTC Confirmation Procedure

INFOID:0000000001703036

NOTE:
If DTC Confirmation Procedure has been previously conducted, always turn ignition switch OFF and wait at least 10 seconds before conducting the next test.
TESTING CONDITION:
Before performing the following procedure, confirm that battery voltage is more than 8V at idle.

WITH CONSULT-II

1. Turn ignition switch ON.
2. Select “DATA MONITOR” mode with CONSULT-II.
3. Start engine and let it idle for 1 second.
4. If DTC is detected, go to EC-496, "Diagnosis Procedure".

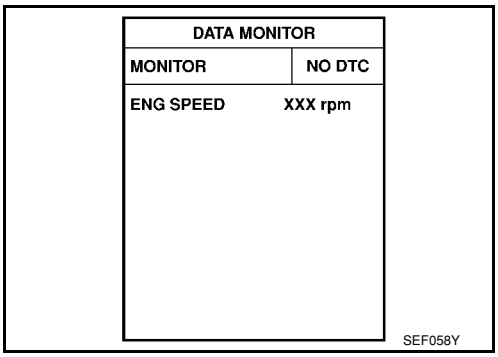

WITH GST

Follow the procedure “WITH CONSULT-II” above.

Wiring Diagram

INFOID:0000000001703037

EC-APPS3-01

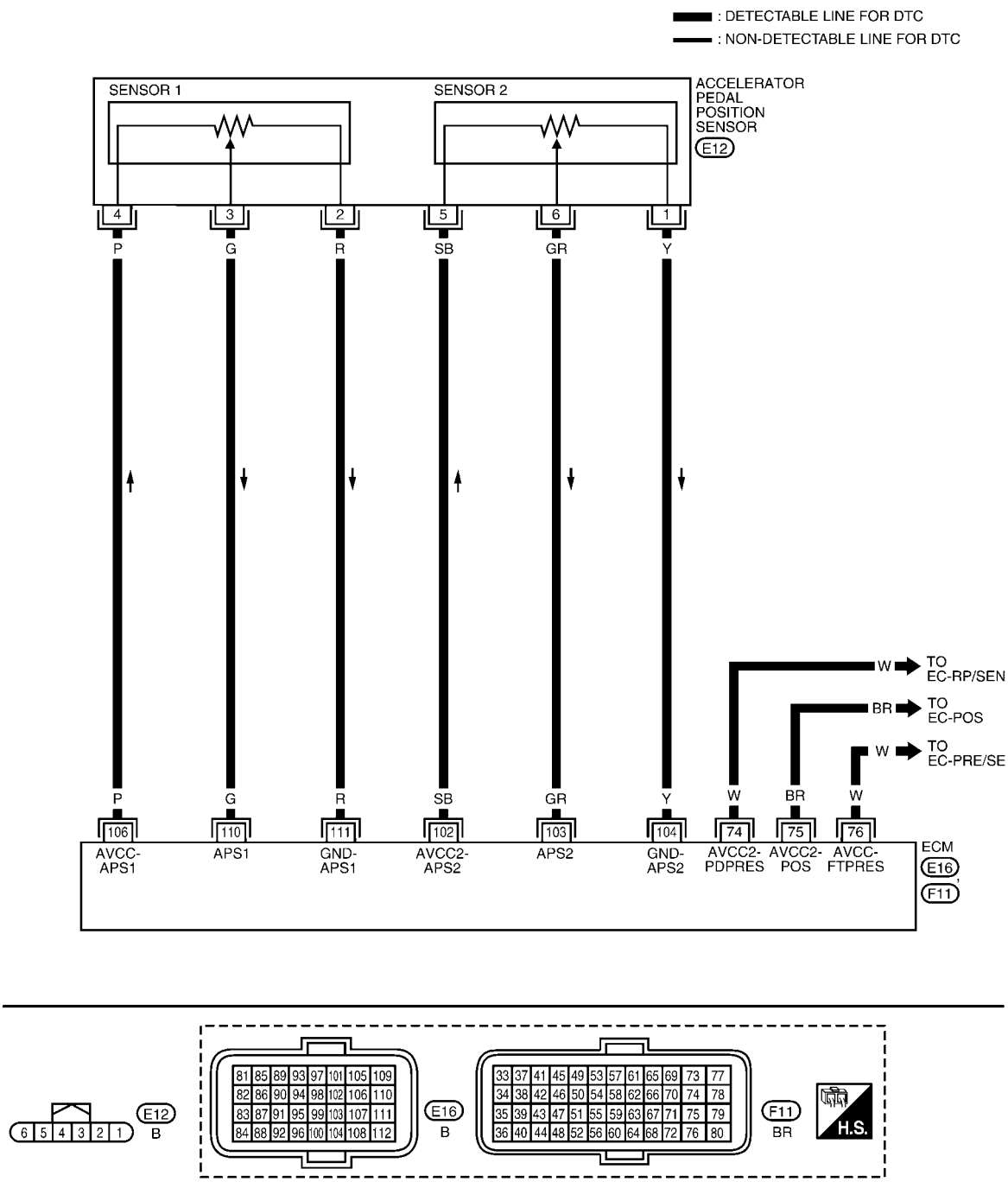

Specification data are reference values and are measured between each terminal and ground.

CAUTION:

Do not use ECM ground terminals when measuring input/output voltage. Doing so may result in damage to the ECM's transistor. Use a ground other than ECM terminals, such as the ground.

TERMINAL NO.	WIRE COLOR	ITEM	CONDITION	DATA (DC Voltage)
74	W	Sensor power supply (Refrigerant pressure sensor)	**[Ignition switch: ON]**	Approximately 5V
75	BR	Sensor power supply [Crankshaft position sensor (POS)]	**[Ignition switch: ON]**	Approximately 5V
76	W	EVAP control system pressure sensor power supply	**[Ignition switch: ON]**	Approximately 5V
102	SB	Sensor power supply (APP sensor 2)	**[Ignition switch: ON]**	Approximately 5V
103	GR	Accelerator pedal position sensor 2	**[Ignition switch: ON]** • Engine stopped • Accelerator pedal: Fully released	0.3 - 0.6V
			[Ignition switch: ON] • Engine stopped • Accelerator pedal: Fully depressed	1.95 - 2.4V
104	Y	Sensor ground (APP sensor 2)	**[Engine is running]** • **Warm-up condition** • Idle speed	Approximately 0V
106	P	Sensor power supply (APP sensor 1)	**[Ignition switch: ON]**	Approximately 5V
110	G	Accelerator pedal position sensor 1	**[Ignition switch: ON]** • Engine stopped • Accelerator pedal: Fully released	0.6 - 0.9V
			[Ignition switch: ON] • Engine stopped • Accelerator pedal: Fully depressed	3.9 - 4.7V
111	R	Sensor ground (APP sensor 1)	**[Engine is running]** • **Warm-up condition** • Idle speed	Approximately 0V

Diagnosis Procedure

INFOID:0000000001703038

1. CHECK GROUND CONNECTIONS

1. Turn ignition switch OFF.
2. Loosen and retighten ground screws on the body.
   Refer to EC-142, "Ground Inspection".

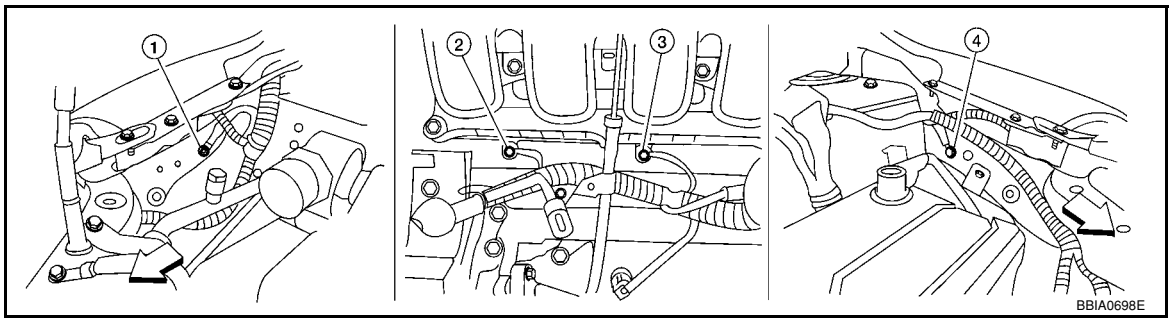

⇦: Vehicle front

1. Body ground E24
2. Engine ground F9
3. Engine ground F16
4. Body ground E15

OK or NG

OK >> GO TO 2.
NG >> Repair or replace ground connections.

2. CHECK APP SENSOR 1 POWER SUPPLY CIRCUIT

1. Disconnect accelerator pedal position (APP) sensor (1) harness connector.
2. Turn ignition switch ON.

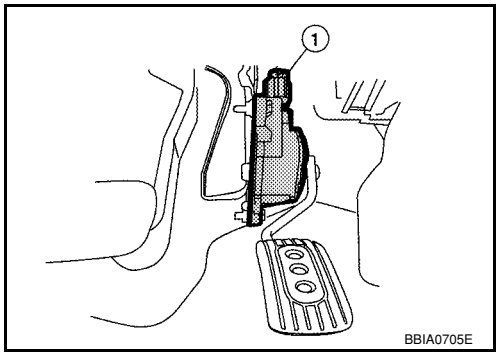

3. Check voltage between APP sensor terminal 4 and ground with CONSULT-II or tester.

Voltage: Approximately 5V

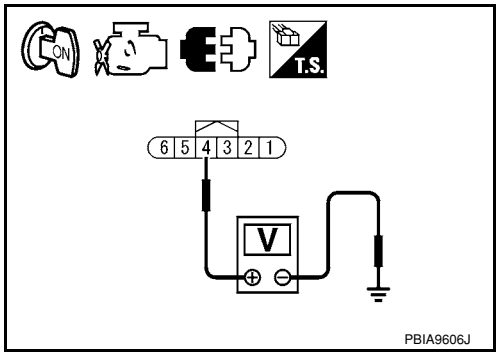

OK or NG

OK >> GO TO 3.
NG >> Repair open circuit or short to ground or short to power in harness or connectors.

3. CHECK APP SENSOR 2 POWER SUPPLY CIRCUIT-I

1. Turn ignition switch ON.
2. Check voltage between APP sensor terminal 5 and ground with CONSULT-II or tester.

Voltage: Approximately 5V

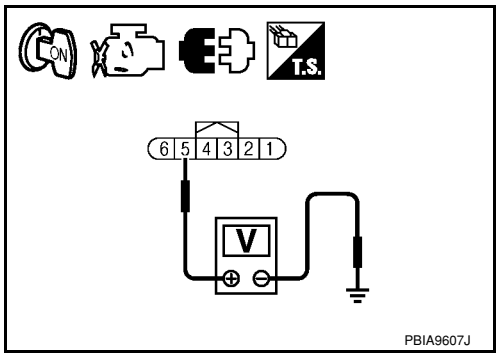

OK or NG

OK >> GO TO 7.
NG >> GO TO 4.

4. CHECK APP SENSOR 2 POWER SUPPLY CIRCUIT-II

1. Turn ignition switch OFF.
2. Disconnect ECM harness connector.
3. Check harness continuity between APP sensor terminal 5 and ECM terminal 102. Refer to Wiring Diagram.

Continuity should exist.

OK or NG

OK >> GO TO 5.
NG >> Repair open circuit or short to ground or short to power in harness or connectors.

5. CHECK APP SENSOR 2 POWER SUPPLY CIRCUIT-III

Check harness for short to power and short to ground, between the following terminals.

ECM terminal	Sensor terminal	Reference Wiring Diagram
74	Refrigerant pressure sensor terminal 3	EC-542, "Wiring Diagram"
75	Crankshaft position sensor (POS) terminal 1	EC-297, "Wiring Diagram"
76	EVAP control system pressure sensor terminal 3	EC-357, "Wiring Diagram"
102	APP sensor terminal 5	EC-495, "Wiring Diagram"

OK or NG

OK >> GO TO 6.
NG >> Repair short to ground or short to power in harness or connectors.

6. CHECK COMPONENTS

Check the following.
- Crankshaft position sensor (POS) (Refer to EC-301, "Component Inspection".)
- EVAP control system pressure sensor (Refer to EC-353, "Component Inspection".)
- Refrigerant pressure sensor (Refer to MTC-22.)

OK or NG

OK >> GO TO 11.
NG >> Replace malfunctioning component.

7. CHECK APP SENSOR GROUND CIRCUIT FOR OPEN AND SHORT

1. Turn ignition switch OFF.
2. Disconnect ECM harness connector.
3. Check harness continuity between the following;
   ECM terminal 111 and APP sensor terminal 2,
   ECM terminal 104 and APP sensor terminal 1.
   Refer to Wiring Diagram.

   Continuity should exist.

4. Also check harness for short to ground and short to power.

OK or NG

OK >> GO TO 8.
NG >> Repair open circuit or short to ground or short to power in harness or connectors.

8. CHECK APP SENSOR INPUT SIGNAL CIRCUIT FOR OPEN AND SHORT

1. Check harness continuity between the following;
   ECM terminal 110 and APP sensor terminal 3,
   ECM terminal 103 and APP sensor terminal 6.
   Refer to Wiring Diagram.

   Continuity should exist.

2. Also check harness for short to ground and short to power.

OK or NG

OK >> GO TO 9.
NG >> Repair open circuit or short to ground or short to power in harness or connectors.

9. CHECK APP SENSOR

Refer to EC-499, "Component Inspection".

OK or NG

OK >> GO TO 11.
NG >> GO TO 10.

10. REPLACE ACCELERATOR PEDAL ASSEMBLY

1. Replace accelerator pedal assembly.
2. Perform EC-76, "Accelerator Pedal Released Position Learning".
3. Perform EC-76, "Throttle Valve Closed Position Learning".
4. Perform EC-76, "Idle Air Volume Learning".

>> **INSPECTION END**

11. CHECK INTERMITTENT INCIDENT

Refer to EC-136.

>> **INSPECTION END**

Component Inspection

INFOID:0000000001703039

ACCELERATOR PEDAL POSITION SENSOR

1. Reconnect all harness connectors disconnected.
2. Turn ignition switch ON.
3. Check voltage between ECM terminals 110 (APP sensor 1 signal), 103 (APP sensor 2 signal) and ground under the following conditions.

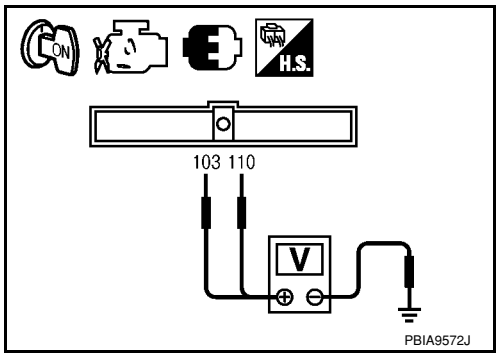

Terminal	Accelerator pedal	Voltage
110 (Accelerator pedal position sensor 1)	Fully released	0.6 - 0.9V
	Fully depressed	3.9 - 4.7V
103 (Accelerator pedal position sensor 2)	Fully released	0.3 - 0.6V
	Fully depressed	1.95 - 2.4V

4. If NG, replace accelerator pedal assembly and go to next step.
5. Perform EC-76, "Accelerator Pedal Released Position Learning".
6. Perform EC-76, "Throttle Valve Closed Position Learning".
7. Perform EC-76, "Idle Air Volume Learning".

Removal and Installation

INFOID:0000000001703040

ACCELERATOR PEDAL

Refer to ACC-3.

DTC P2A00 A/F SENSOR 1

Component Description

INFOID:0000000001703041

The air fuel ratio (A/F) sensor 1 is a planar one-cell limit current sensor. The sensor element of the A/F sensor 1 is composed an electrode layer, which transports ions. It has a heater in the element.
The sensor is capable of precise measurement λ = 1, but also in the lean and rich range. Together with its control electronics, the sensor outputs a clear, continuous signal throughout a wide λ range.
The exhaust gas components diffuse through the diffusion layer at the sensor cell. An electrode layer is applied voltage, and this current relative oxygen density in lean. Also this current relative hydrocarbon density in rich.
Therefore, the A/F sensor 1 is able to indicate air fuel ratio by this electrode layer of current. In addition, a heater is integrated in the sensor to ensure the required operating temperature of about 800°C (1,472°F).

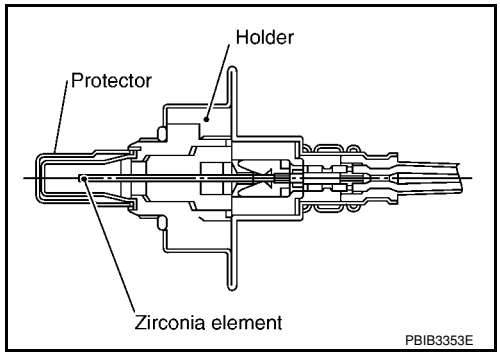

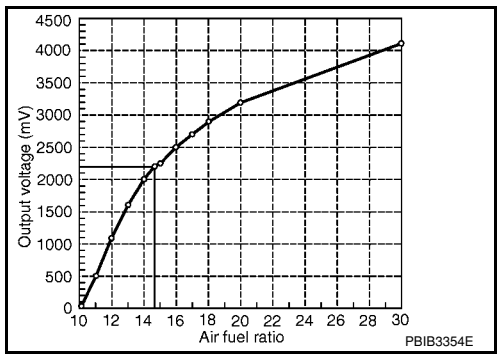

CONSULT-II Reference Value in Data Monitor Mode

INFOID:0000000001703042

Specification data are reference values.

MONITOR ITEM	CONDITION		SPECIFICATION
A/F SEN1 (B1)	• Engine: After warming up	Maintaining engine speed at 2,000 rpm	Fluctuates around 2.2V

On Board Diagnosis Logic

INFOID:0000000001703043

To judge the malfunction, the A/F signal computed by ECM from the A/F sensor 1 signal is monitored not to be shifted to LEAN side or RICH side.

DTC No.	Trouble diagnosis name	DTC detecting condition	Possible Cause
P2A00 2A00	Air fuel ratio (A/F) sensor 1 circuit range/performance	• The output voltage computed by ECM from the A/F sensor 1 signal is shifted to the lean side for a specified period. • The A/F signal computed by ECM from the A/F sensor 1 signal is shifted to the rich side for a specified period.	• Air fuel ratio (A/F) sensor 1 • Air fuel ratio (A/F) sensor 1 heater • Fuel pressure • Fuel injector • Intake air leaks

DTC Confirmation Procedure

INFOID:0000000001703044

NOTE:
If DTC Confirmation Procedure has been previously conducted, always turn ignition switch OFF and wait at least 10 seconds before conducting the next test.
TESTING CONDITION:
Before performing the following procedure, confirm that battery voltage is more than 11V at idle.

WITH CONSULT-II

1. Start engine and warm it up to normal operating temperature.
2. Turn ignition switch OFF and wait at least 10 seconds.

3. Turn ignition switch ON and select “SELF-LEARNING CONT” in “WORK SUPPORT” mode with CONSULT-II.
4. Clear the self-learning coefficient by touching “CLEAR”.
5. Turn ignition switch OFF and wait at least 10 seconds.
6. Start engine and keep the engine speed between 3,500 and 4,000 rpm for 1 minute under no load.
7. Let engine idle for 1 minute.
8. Keep engine speed between 2,500 and 3,000 rpm for 20 minutes.
9. If 1st trip DTC is detected, go to EC-503, "Diagnosis Procedure".

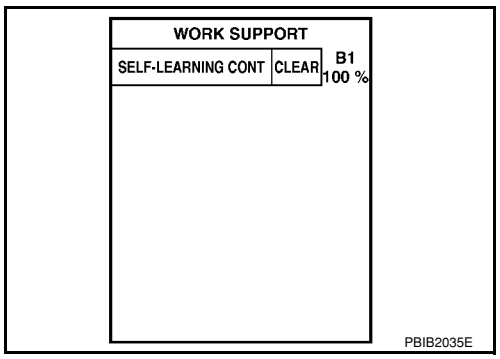

WITH GST

1. Start engine and warm it up to normal operating temperature.
2. Turn ignition switch OFF and wait at least 10 seconds.
3. Disconnect mass air flow sensor harness connector.
4. Start engine and let it idle for at least 5 seconds.
5. Stop engine and reconnect mass air flow sensor (1) harness connector.
6. Select Service $03 with GST and make sure that DTC P0102 is detected.
7. Select Service $04 with GST and erase the DTC P0102.
8. Start engine and keep the engine speed between 3,500 and 4,000 rpm for 1 minute under no load.
9. Let engine idle for 1 minute.
10. Keep engine speed between 2,500 and 3,000 rpm for 20 minutes.
11. Select Service $07 with GST.
    If 1st trip DTC is detected, go to EC-503, "Diagnosis Procedure".

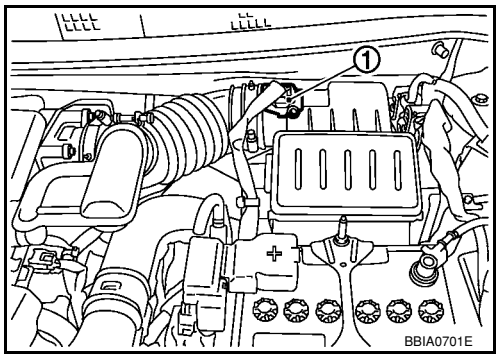

Wiring Diagram

INFOID:0000000001703045

EC-A/F-01

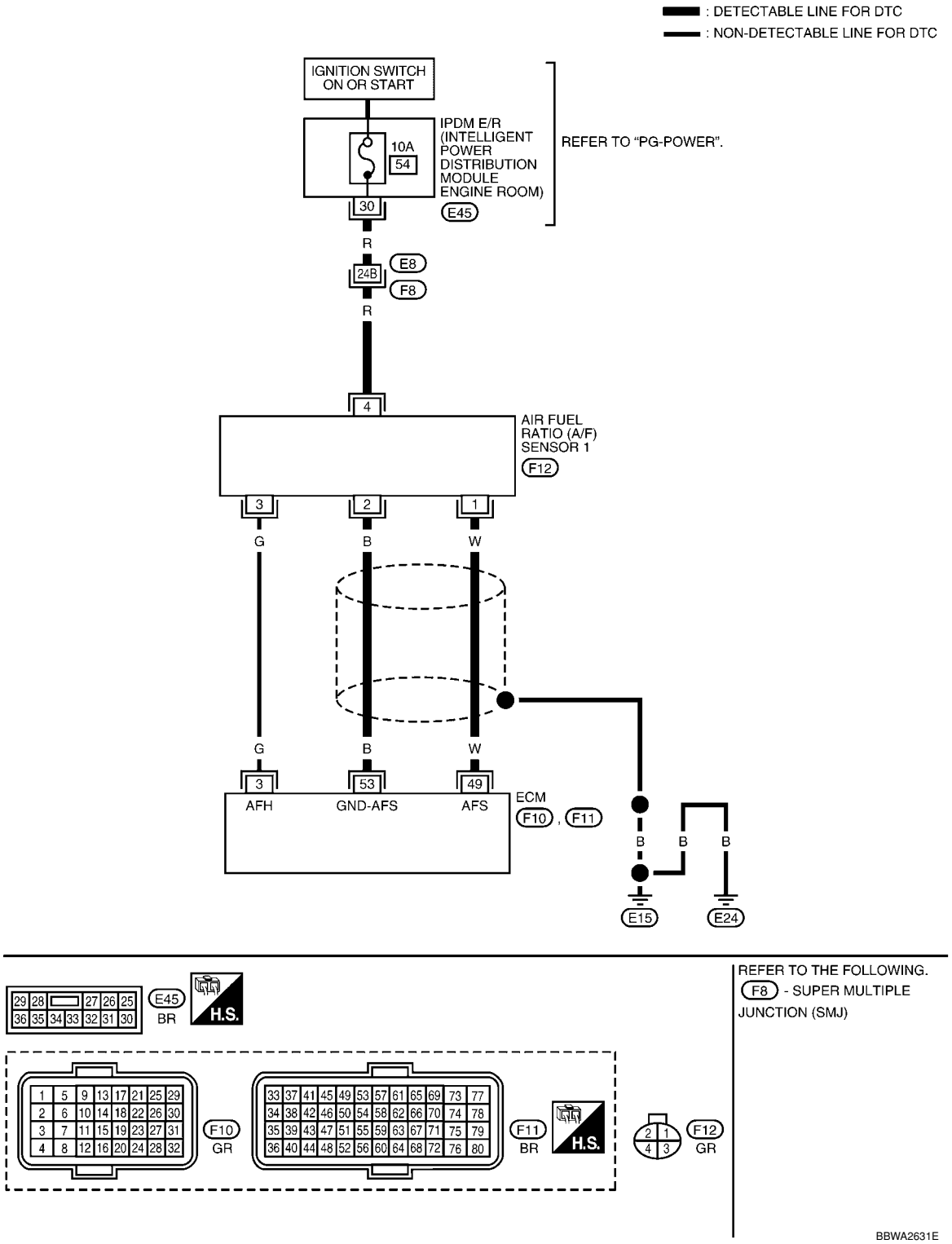

Specification data are reference values and are measured between each terminal and ground.
Pulse signal is measured by CONSULT-II.

CAUTION:

Do not use ECM ground terminals when measuring input/output voltage. Doing so may result in damage to the ECM's transistor. Use a ground other than ECM terminals, such as the ground.

TERMINAL NO.	WIRE COLOR	ITEM	CONDITION	DATA (DC Voltage)
3	G	A/F sensor 1 heater	**[Engine is running]** • **Warm-up condition** • Idle speed (More than 140 seconds after starting engine)	Approximately 2.9 - 8.8V★ 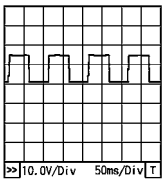 PBIA8148J
49	W	A/F sensor 1	**[Engine is running]** • **Warm-up condition** • Engine speed: 2,000 rpm	Approximately 1.8V Output voltage varies with air fuel ratio.
53	B	A/F sensor 1	**[Ignition switch: ON]**	Approximately 2.2V

★: Average voltage for pulse signal (Actual pulse signal can be confirmed by oscilloscope.)

Diagnosis Procedure

INFOID:0000000001703046

1. CHECK GROUND CONNECTIONS

1. Turn ignition switch OFF.
2. Loosen and retighten ground screws on the body.
   Refer to EC-142, "Ground Inspection".

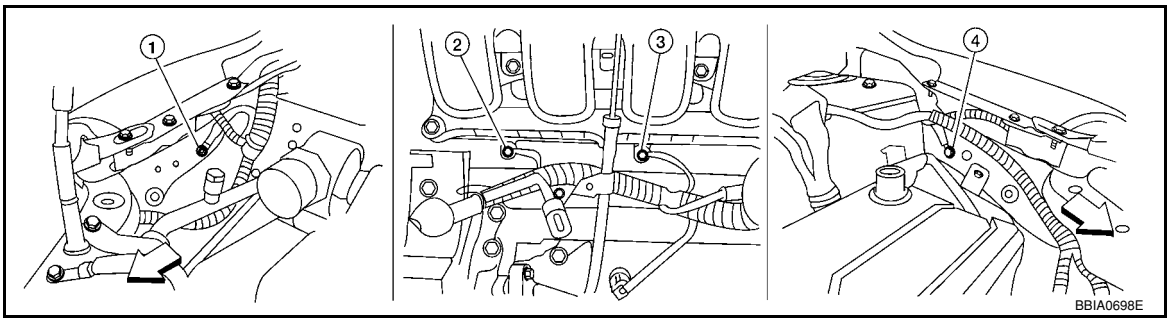

⇦: Vehicle front

1. Body ground E24
2. Engine ground F9
3. Engine ground F16
4. Body ground E15

OK or NG

OK >> GO TO 2.
NG >> Repair or replace ground connections.

2. RETIGHTEN AIR FUEL RATIO (A/F) SENSOR 1

Loosen and retighten the air fuel ratio (A/F) sensor 1 (2).
- Air fuel ratio (A/F) sensor harness connector (1)

Tightening torque: 50 N-m (5.1 kg-m, 37 ft-lb)

>> GO TO 3.

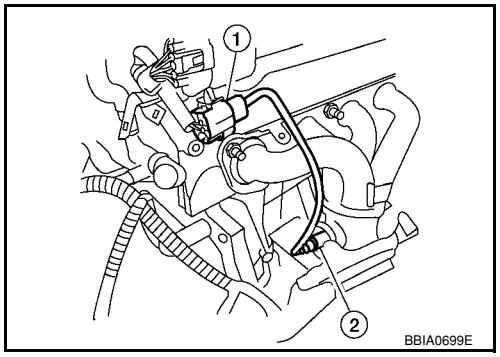

3. CHECK FOR INTAKE AIR LEAK

1. Start engine and run it at idle.
2. Listen for an intake air leak after the mass air flow sensor.

OK or NG

OK >> GO TO 4.
NG >> Repair or replace.

4. CLEAR THE SELF-LEARNING DATA

With CONSULT-II

1. Start engine and warm it up to normal operating temperature.
2. Select “SELF-LEARNING CONT” in “WORK SUPPORT” mode with CONSULT-II.
3. Clear the self-learning control coefficient by touching “CLEAR”.
4. Run engine for at least 10 minutes at idle speed.
   Is the 1st trip DTC P0171 and P0172 detected?
   Is it difficult to start engine?

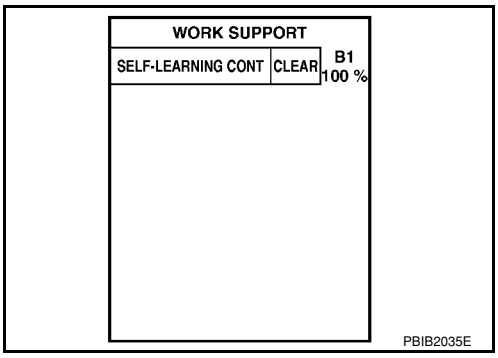

Without CONSULT-II

1. Start engine and warm it up to normal operating temperature.
2. Turn ignition switch OFF.
3. Disconnect mass air flow sensor (1) harness connector.
4. Restart engine and let it idle for at least 5 seconds.
5. Stop engine and reconnect mass air flow sensor harness connector.
6. Make sure DTC P0102 is displayed.
7. Erase the DTC memory. Refer to EC-47, "Emission-related Diagnostic Information".
8. Make sure DTC P0000 is displayed.
9. Run engine for at least 10 minutes at idle speed.
   Is the 1st trip DTC P0171 and P0172 detected?
   Is it difficult to start engine?

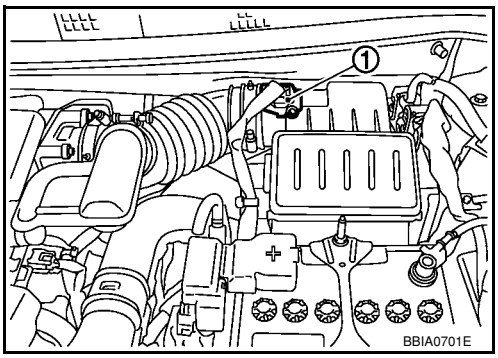

Yes or No

Yes >> Perform trouble diagnosis for DTC P0171 or P0172. Refer to EC-257 or EC-264.
No >> GO TO 5.

5. CHECK HARNESS CONNECTOR

1. Turn ignition switch OFF.
2. Disconnect A/F sensor 1 harness connector (1).
- Air fuel ratio (A/F) sensor (2)
3. Check harness connector for water.

Water should no exist.

OK or NG

OK >> GO TO 6.
NG >> Repair or replace harness connector.

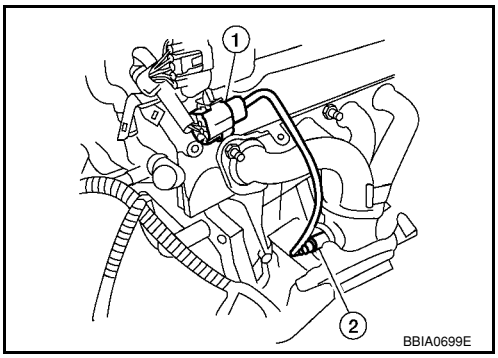

6. CHECK AIR FUEL RATIO (A/F) SENSOR 1 POWER SUPPLY CIRCUIT

1. Turn ignition switch ON.

2. Check voltage between A/F sensor 1 terminal 4 and ground with CONSULT-II or tester.

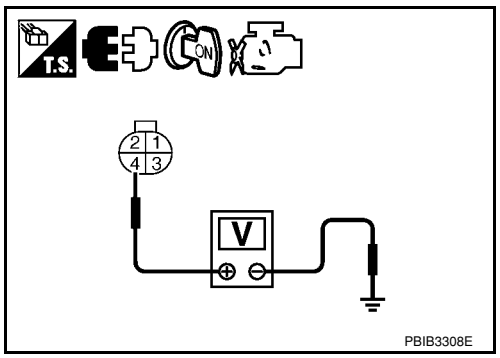

Voltage: Battery voltage

OK or NG

OK >> GO TO 8.
NG >> GO TO 7.

7. DETECT MALFUNCTIONING PART

Check the following.
- Harness connectors E8, F8
- Harness for open or short between A/F sensor 1 and fuse

>> Repair or replace harness or connectors.

8. CHECK A/F SENSOR 1 INPUT SIGNAL CIRCUIT FOR OPEN AND SHORT

1. Turn ignition switch OFF.
2. Disconnect ECM harness connector.
3. Check harness continuity between the following terminals. Refer to Wiring Diagram.

A/F sensor 1 terminal	ECM terminal
1	49
2	53

Continuity should exist.

4. Check harness continuity between ECM terminals 49, 53 or A/F sensor 1 terminals 1, 2 and ground. Refer to Wiring Diagram.

Continuity should not exist.

5. Also check harness for short to power.

OK or NG

OK >> GO TO 9.
NG >> Repair open circuit or short to ground or short to power in harness or connectors.

9. CHECK A/F SENSOR 1 HEATER

Refer to EC-154, "Component Inspection".

OK or NG

OK >> GO TO 10.
NG >> GO TO 11.

10. CHECK INTERMITTENT INCIDENT

Perform EC-136.

OK or NG

OK >> GO TO 11.
NG >> Repair or replace.

11. REPLACE AIR FUEL RATIO (A/F) SENSOR 1

Replace air fuel ratio (A/F) sensor 1.

CAUTION:
- **Discard any air fuel ratio (A/F) sensor which has been dropped from a height of more than 0.5 m (19.7 in) onto a hard surface such as a concrete floor; use a new one.**

- **Before installing new air fuel ratio (A/F) sensor, clean exhaust system threads using Heated Oxygen Sensor Thread Cleaner tool J-43897-18 or J-43897-12 and approved anti-seize lubricant.**

>> GO TO 12.

12. CONFIRM A/F ADJUSTMENT DATA

1. Turn ignition switch ON.
2. Select “A/F ADJ-B1” in “DATA MONITOR” mode with CONSULT-II.
3. Make sure that “0.000” is displayed on CONSULT-II screen.

OK or NG

OK >> **INSPECTION END**
NG >> GO TO 13.

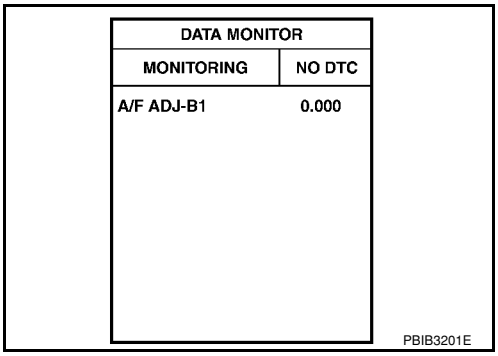

13. CLEAR THE SELF-LEARNGIN DATA

With CONSULT-II

1. Start engine and warm it up to normal operating temperature.
2. Select “SELF-LEARNING CONT” in “WORK SUPPORT” mode with CONSULT-II.
3. Clear the self-learning control coefficient by touching “CLEAR”.

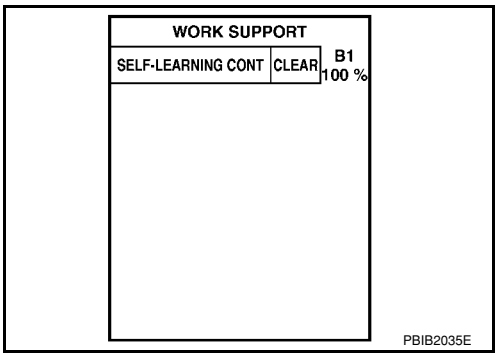

Without CONSULT-II

1. Start engine and warm it up to normal operating temperature.
2. Turn ignition switch OFF.
3. Disconnect mass air flow sensor harness (1) connector.
4. Restart engine and let it idle for at least 5 seconds.
5. Stop engine and reconnect mass air flow sensor harness connector.
6. Make sure DTC P0102 is displayed.
7. Erase the DTC memory. Refer to EC-47, "Emission-related Diagnostic Information".
8. Make sure DTC P0000 is displayed.

>> GO TO 14.

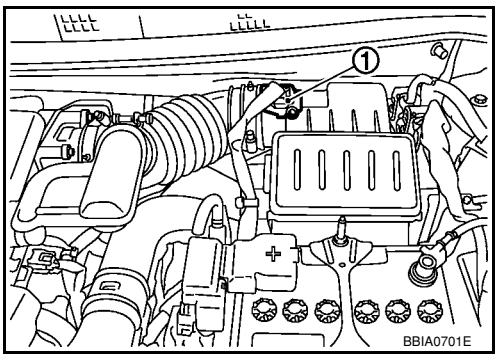

14. CONFIRM A/F ADJUSTMENT DATA

1. Turn ignition switch OFF and then ON.

2. Select “A/F ADJ-B1” in “DATA MONITOR” mode with CONSULT-II.
3. Make sure that “0.000” is displayed on CONSULT-II screen.

>> **INSPECTION END**

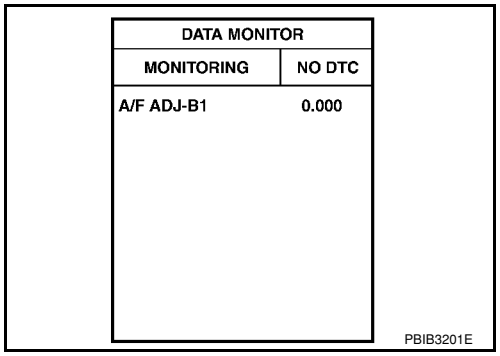

Removal and Installation

INFOID:0000000001703047

AIR FUEL RATIO SENSOR

Refer to EM-21.

ASCD BRAKE SWITCH

Component Description

INFOID:0000000001703048

When depress on the brake pedal, ASCD brake switch (2) is turned OFF and stop lamp switch (1) is turned ON. ECM detects the state of the brake pedal by this input of two kinds (ON/OFF signal)
Refer to EC-28 for the ASCD function.

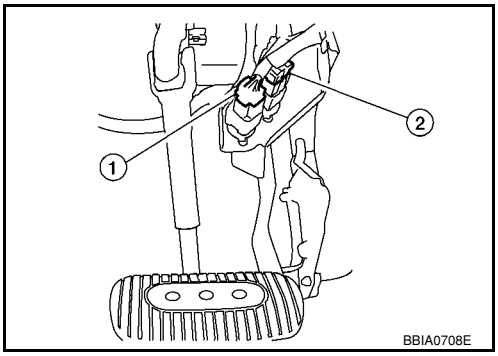

CONSULT-II Reference Value in Data Monitor Mode

INFOID:0000000001703049

Specification data are reference values.

MONITOR ITEM	CONDITION		SPECIFICATION
BRAKE SW1 (ASCD brake switch)	• Ignition switch: ON	• Brake pedal: Fully released (A/T, CVT) • Brake pedal and clutch pedal: Fully released (M/T)	ON
		• Brake pedal: Slightly depressed (A/T, CVT) • Brake pedal and/or clutch pedal: Slightly depressed (M/T)	OFF
BRAKE SW2 (Stop lamp switch)	• Ignition switch: ON	Brake pedal: Fully released	OFF
		Brake pedal: Slightly depressed	ON

Wiring Diagram

INFOID:0000000001703050

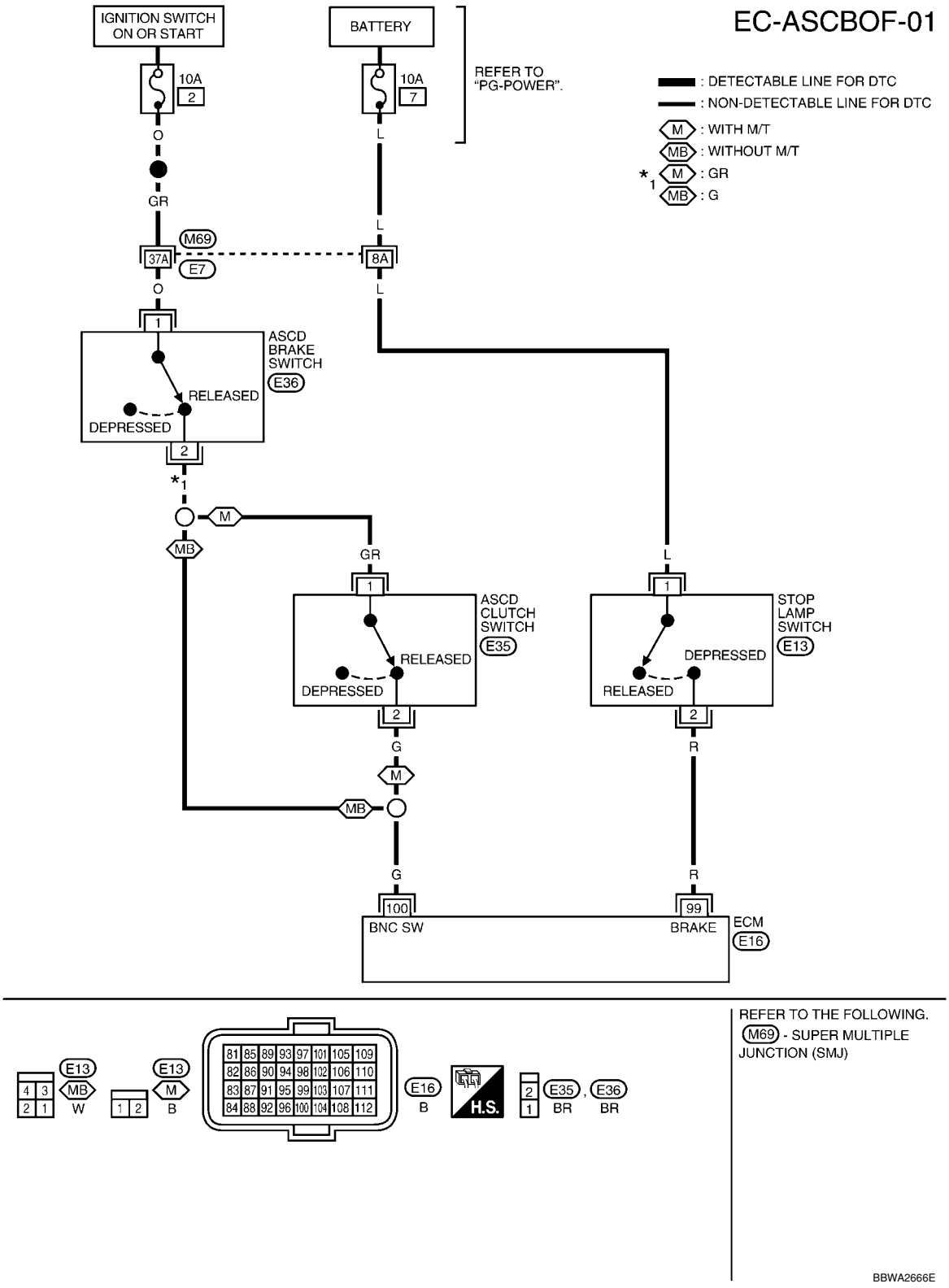

Specification data are reference values and are measured between each terminal and ground.

CAUTION:

Do not use ECM ground terminals when measuring input/output voltage. Doing so may result in damage to the ECM's transistor. Use a ground other than ECM terminals, such as the ground.

TERMINAL NO.	WIRE COLOR	ITEM	CONDITION	DATA (DC Voltage)
99	R	Stop lamp switch	**[Ignition switch: ON]** • Brake pedal: Fully released	Approximately 0V
			[Ignition switch: ON] • Brake pedal: Slightly depressed	BATTERY VOLTAGE (11 - 14V)
100	G	ASCD brake switch	**[Ignition switch: ON]** • Brake pedal: Slightly depressed (A/T, CVT) • Brake pedal and/or clutch pedal: Slightly depressed (M/T)	Approximately 0V
			[Ignition switch: ON] • Brake pedal: Fully released (A/T, CVT) • Brake pedal and clutch pedal: Fully released (M/T)	BATTERY VOLTAGE (11 - 14V)

Diagnosis Procedure

INFOID:0000000001703051

1.CHECK OVERALL FUNCTION-I

With CONSULT-II

1. Turn ignition switch ON.
2. Select “BRAKE SW1” in “DATA MONITOR” mode with CONSULT-II.
3. Check “BRAKE SW1” indication under the following conditions.

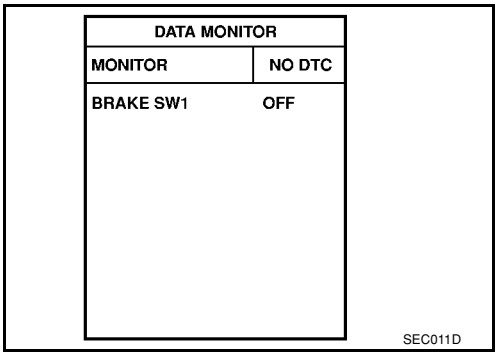

M/T models

CONDITION	INDICATION
Clutch pedal and/or brake pedal: Slightly depressed	OFF
Clutch pedal and brake pedal: Fully released	ON

A/T and CVT models

CONDITION	INDICATION
Brake pedal: Slightly depressed	OFF
Brake pedal: Fully released	ON

Without CONSULT-II

1. Turn ignition switch ON.
2. Check voltage between ECM terminal 100 and ground under the following conditions.

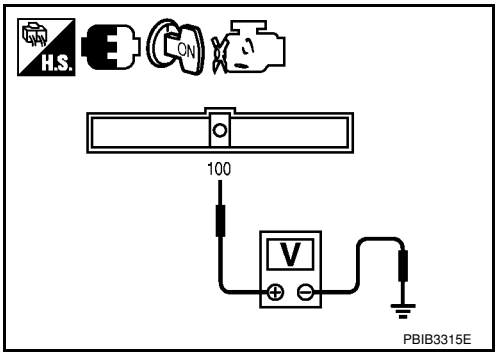

M/T models

CONDITION	VOLTAGE
Clutch pedal and/or brake pedal: Slightly depressed	Approximately 0V
Clutch pedal and brake pedal: Fully released	Battery voltage

A/T and CVT models

CONDITION	VOLTAGE
Brake pedal: Slightly depressed	Approximately 0V
Brake pedal: Fully released	Battery voltage

OK or NG

OK >> GO TO 2.
NG (M/T models) >>GO TO 3.
NG (A/T and CVT models) >>GO TO 4.

2.CHECK OVERALL FUNCTION-II

With CONSULT-II

Check “BRAKE SW2” indication in “DATA MONITOR” mode.

CONDITION	INDICATION
Brake pedal: Fully released	OFF
Brake pedal: Slightly depressed	ON

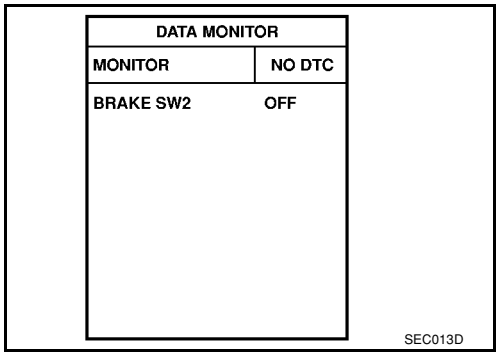

Without CONSULT-II

Check voltage between ECM terminal 99 and ground under the following conditions.

CONDITION	VOLTAGE
Brake pedal: Fully released	Approximately 0V
Brake pedal: Slightly depressed	Battery voltage

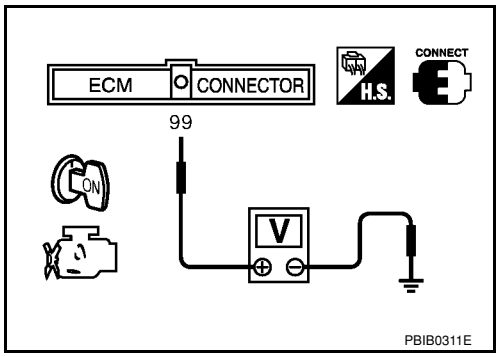

OK or NG

OK >> GO TO 15.
NG >> GO TO 11.

3. CHECK ASCD CLUTCH SWITCH POWER SUPPLY CIRCUIT

1. Turn ignition switch OFF.
2. Disconnect ASCD clutch switch (1) harness connector.
- Clutch pedal (2)
3. Turn ignition switch ON.

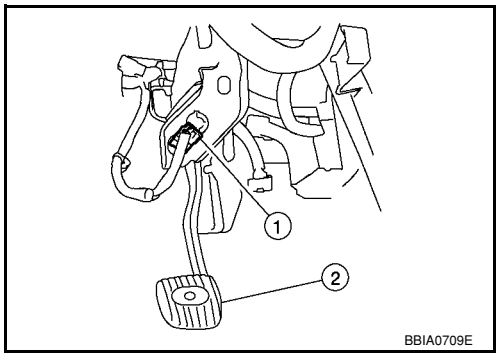

4. Check voltage between ASCD clutch switch terminal 1 and ground with CONSULT-II or tester.

Voltage: Battery voltage

OK or NG

OK >> GO TO 9.
NG >> GO TO 4.

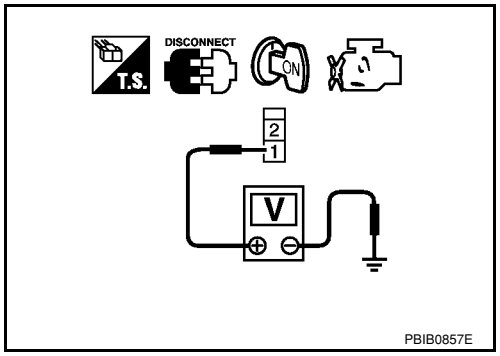

4. CHECK ASCD BRAKE SWITCH POWER SUPPLY

1. Turn ignition switch OFF.

2. Disconnect ASCD brake switch (2) harness connector.
- Stop lamp switch (1)
3. Turn ignition switch ON.

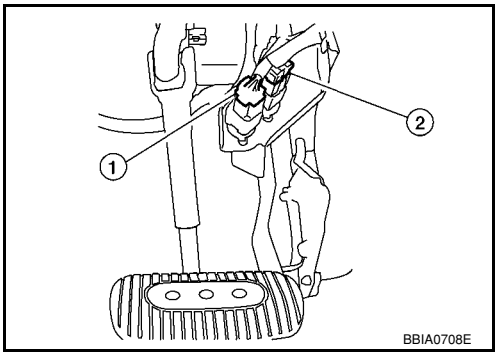

4. Check voltage between ASCD brake switch terminal 1 and ground under the following conditions with CONSULT-II or tester.

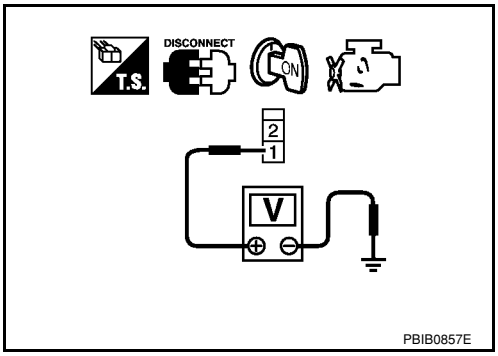

CONDITION	VOLTAGE
Clutch pedal: Fully released	Battery voltage
Clutch pedal: Slightly depressed	Approx. 0V

OK or NG

OK (M/T models) >>GO TO 6.
OK (A/T and CVT models) >>GO TO 7.
NG >> GO TO 5.

5. DETECT MALFUNCTIONING PART

Check the following.
- Harness connectors M69, E7
- 10A fuse
- Harness for open or short between ASCD brake switch and fuse

>> Repair open circuit or short to ground or short to power in harness or connectors.

6. CHECK ASCD CLUTCH SWITCH INPUT SIGNAL CIRCUIT FOR OPEN AND SHORT

1. Turn ignition switch OFF.
2. Check harness continuity between ASCD brake switch terminal 2 and ASCD clutch switch terminal 1. Refer to Wiring Diagram.

Continuity should exist.

3. Also check harness for short to ground and short to power.

OK or NG

OK >> GO TO 8.
NG >> Repair open circuit or short to ground or short to power in harness or connectors.

7. CHECK ASCD BRAKE SWITCH INPUT SIGNAL CIRCUIT FOR OPEN AND SHORT

1. Turn ignition switch OFF.
2. Disconnect ECM harness connector.
3. Check harness continuity between ECM terminal 100 and ASCD brake switch terminal 2. Refer to Wiring Diagram.

Continuity should exist.

4. Also check harness for short to ground and short to power.

OK or NG

OK >> GO TO 8.
NG >> Repair open circuit or short to ground or short to power in harness or connectors.

8. CHECK ASCD BRAKE SWITCH

Refer to EC-445, "Component Inspection".

OK or NG

OK >> GO TO 15.
NG >> Replace ASCD brake switch.

9. CHECK ASCD CLUTCH SWITCH INPUT SIGNAL CIRCUIT FOR OPEN AND SHORT

1. Turn ignition switch OFF.
2. Disconnect ECM harness connector.
3. Check harness continuity between ECM terminal 100 and ASCD clutch switch terminal 2. Refer to Wiring Diagram.

Continuity should exist.

4. Also check harness for short to ground and short to power.

OK or NG

OK >> GO TO 10.
NG >> Repair open circuit or short to ground or short to power in harness or connectors.

10. CHECK ASCD CLUTCH SWITCH

Refer to EC-445, "Component Inspection"

OK or NG

OK >> GO TO 15.
NG >> Replace ASCD clutch switch.

11. CHECK STOP LAMP SWITCH POWER SUPPLY CIRCUIT

1. Turn ignition switch OFF.
2. Disconnect stop lamp switch (1) harness connector.
- ASCD brake switch (2)

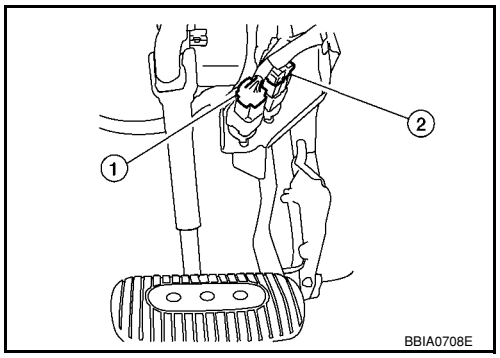

3. Check voltage between stop lamp switch terminal 1 and ground with CONSULT -II or tester.

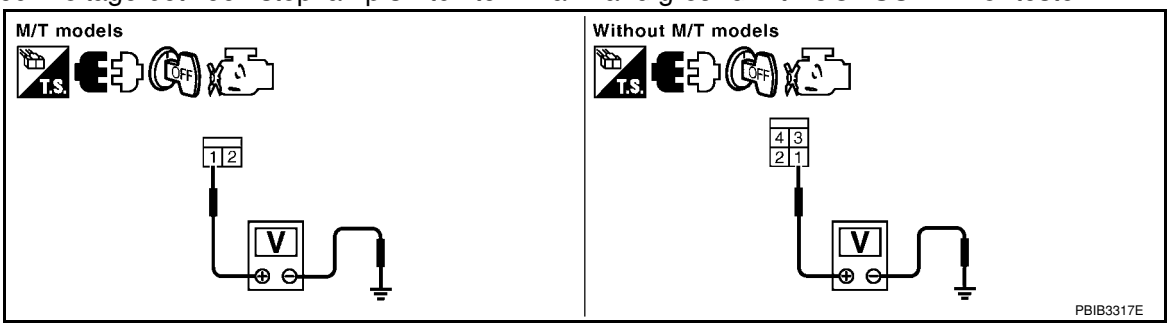

Voltage: Battery voltage

OK or NG

OK >> GO TO 13.
NG >> GO TO 12.

12. DETECT MALFUNCTIONING PART

Check the following.
- Harness connectors M69, E7

- Harness for open or short between stop lamp switch and battery

>> Repair open circuit or short to ground or short to power in harness or connectors.

13. CHECK STOP LAMP SWITCH INPUT SIGNAL CIRCUIT FOR OPEN AND SHORT

1. Disconnect ECM harness connector.
2. Check harness continuity between ECM terminal 99 and stop lamp switch terminal 2.
   Refer to Wiring Diagram.

Continuity should exist.

3. Also check harness for short to ground and short to power.

OK or NG

OK >> GO TO 14.
NG >> Repair open circuit or short to ground or short to power in harness or connectors.

14. CHECK STOP LAMP SWITCH

Refer to EC-445, "Component Inspection".

OK or NG

OK >> GO TO 15.
NG >> Replace stop lamp switch.

15. CHECK INTERMITTENT INCIDENT

Refer to EC-136.

>> **INSPECTION END**

Component Inspection

INFOID:0000000001703052

ASCD BRAKE SWITCH

1. Turn ignition switch OFF.
2. Disconnect ASCD brake switch harness connector.
3. Check continuity between ASCD brake switch terminals 1 and 2 under the following conditions.

Condition	Continuity
Brake pedal: Fully released.	Should exist.
Brake pedal: Slightly depressed.	Should not exist.

If NG, adjust ASCD brake switch installation, refer to BR-5, and perform step 3 again.

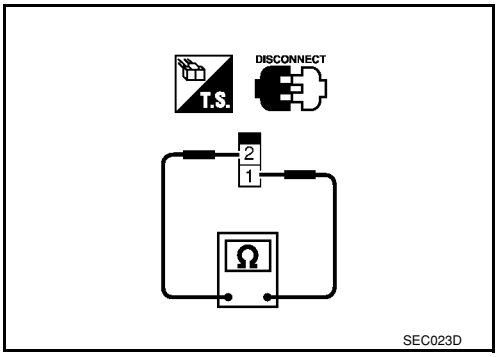

ASCD CLUTCH SWITCH

1. Turn ignition switch OFF.
2. Disconnect ASCD clutch switch harness connector.

3. Check continuity between ASCD clutch switch terminals 1 and 2 under the following conditions.

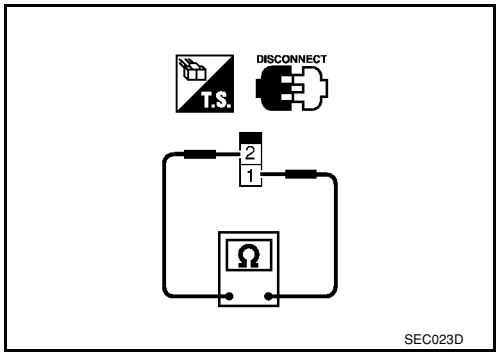

Condition	Continuity
Clutch pedal: Fully released.	Should exist.
Clutch pedal: Slightly depressed.	Should not exist.

If NG, adjust ASCD clutch switch installation, refer to CL-5, and perform step 3 again.

STOP LAMP SWITCH

1. Turn ignition switch OFF.
2. Disconnect stop lamp switch harness connector.
3. Check continuity between stop lamp switch terminals 1 and 2 under the following conditions.

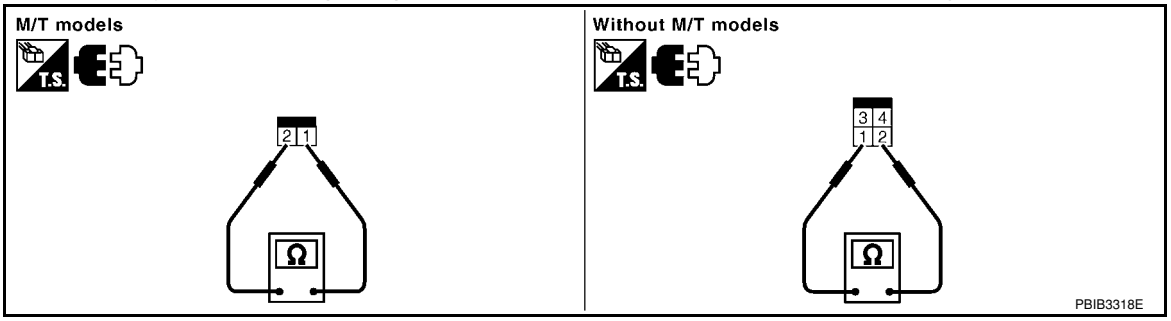

Condition	Continuity
Brake pedal: Fully released.	Should not exist.
Brake pedal: Slightly depressed.	Should exist.

If NG, adjust stop lamp switch installation, refer to BR-5, and perform step 3 again.

ASCD INDICATOR

Component Description

INFOID:0000000001703053

ASCD indicator lamp illuminates to indicate ASCD operation status. Lamp has two indicators, CRUISE and SET, and is integrated in combination meter.
CRUISE indicator illuminates when MAIN switch on ASCD steering switch is turned ON to indicate that ASCD system is ready for operation.
SET indicator illuminates when following conditions are met.
- CRUISE indicator is illuminated.
- SET/COAST switch on ASCD steering switch is turned ON while vehicle speed is within the range of ASCD setting.

SET indicator remains lit during ASCD control.
Refer to EC-28 for the ASCD function.

CONSULT-II Reference Value in Data Monitor Mode

INFOID:0000000001703054

Specification data are reference value.

MONITOR ITEM	CONDITION		SPECIFICATION
CRUISE LAMP	• Ignition switch: ON	MAIN switch: Pressed at 1st time → 2nd	ON → OFF
SET LAMP	• MAIN switch: ON • Vehicle: Between 40 km/h (25 MPH) and 144 km/h (89 MPH)	ASCD: Operating	ON
		ASCD: Not operating	OFF

Wiring Diagram

INFOID:0000000001703055

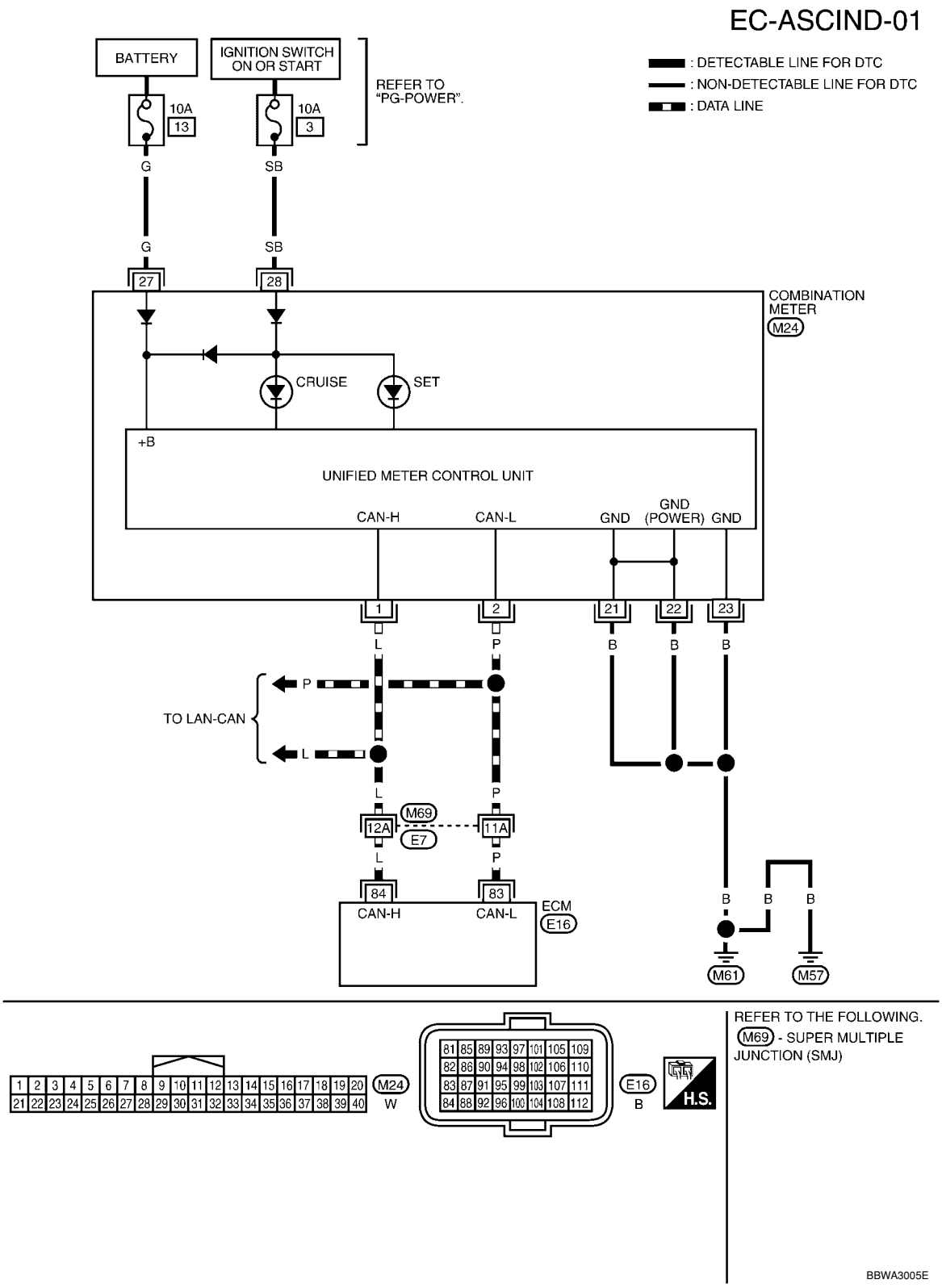

Diagnosis Procedure

INFOID:0000000001703056

1.CHECK OVERALL FUNCTION

Check ASCD indicator under the following conditions.

ASCD INDICATOR	CONDITION		SPECIFICATION
CRUISE LAMP	• Ignition switch: ON	MAIN switch: Pressed at 1st time → 2nd	ON → OFF
SET LAMP	• MAIN switch: ON • Vehicle: Between 40 km/h (25 MPH) and 144 km/h (89 MPH)	ASCD: Operating	ON
		ASCD: Not operating	OFF

OK or NG

OK >> **INSPECTION END**
NG >> GO TO 2.

2. CHECK DTC

Check that DTC U1000 or U1001 is not displayed.

Yes or No

Yes >> Perform trouble diagnoses for DTC U1000, U1001, refer to EC-143.
No >> GO TO 3.

3. CHECK COMBINATION METER OPERATION

Does combination meter operate normally?

Yes or No

Yes >> GO TO 4.
No >> Check combination meter circuit. Refer to DI-4.

4. CHECK INTERMITTENT INCIDENT

Refer to EC-136.

>> **INSPECTION END**

ELECTRICAL LOAD SIGNAL

CONSULT-II Reference Value in Data Monitor Mode

INFOID:0000000001703057

Specification data are reference values.

MONITOR ITEM	CONDITION		SPECIFICATION
LOAD SIGNAL	• Ignition switch: ON	Rear window defogger switch is ON and/or lighting switch is in 2nd position.	ON
		Rear window defogger switch is OFF and lighting switch is OFF.	OFF
HEATER FAN SW	• Ignition switch: ON	Heater fan: Operating.	ON
		Heater fan: Not operating.	OFF

Diagnosis Procedure

INFOID:0000000001703058

1. CHECK LOAD SIGNAL CIRCUIT OVERALL FUNCITION-I

1. Turn ignition switch ON.
2. Check “LOAD SIGNAL” in “DATA MONITOR” mode with CONSULT-II under the following conditions.

Condition	LOAD SIGNAL
Lighting switch: ON at 2nd position	ON
Lighting switch: OFF	OFF

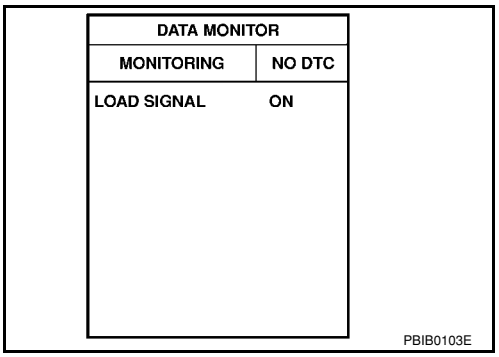

OK or NG

OK >> GO TO 2.
NG >> GO TO 4.

2. CHECK LOAD SIGNAL CIRCUIT OVERALL FUNCTION-II

Check “LOAD SIGNAL” in “DATA MONITOR” mode with CONSULT-II under the following conditions.

Condition	LOAD SIGNAL
Rear window defogger switch: ON	ON
Rear window defogger switch: OFF	OFF

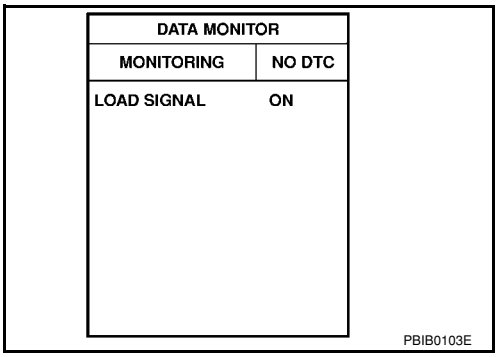

OK or NG

OK >> GO TO 3.
NG >> GO TO 5.

3. CHECK HEATER FAN SIGNAL CIRCUIT OVERALL FUNCTION

Check “HEATER FAN SW” in “DATA MONITOR” mode with CONSULT-II under the following conditions.

Condition	LOAD SIGNAL
Heater fan control switch: ON	ON
Heater fan control switch: OFF	OFF

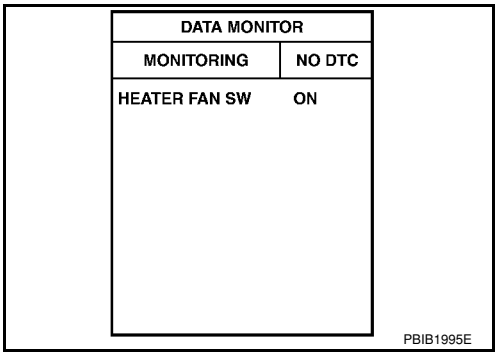

OK or NG

OK >> **INSPECTION END**.
NG >> GO TO 6.

4. CHECK HEADLAMP SYSTEM

Refer to LT-4 or LT-25.

>> **INSPECTION END**

5. CHECK REAR WINDOW DEFOGGER SYSTEM

Refer to GW-49.

>> **INSPECTION END**

6. CHECK HEATER FAN CONTROL SYSTEM

Refer to MTC-22.

>> **INSPECTION END**

FUEL INJECTOR

Component Description

INFOID:0000000001703059

The fuel injector is a small, precise solenoid valve. When the ECM supplies a ground to the fuel injector circuit, the coil in the fuel injector is energized. The energized coil pulls the ball valve back and allows fuel to flow through the fuel injector into the intake manifold. The amount of fuel injected depends upon the injection pulse duration. Pulse duration is the length of time the fuel injector remains open. The ECM controls the injection pulse duration based on engine fuel needs.

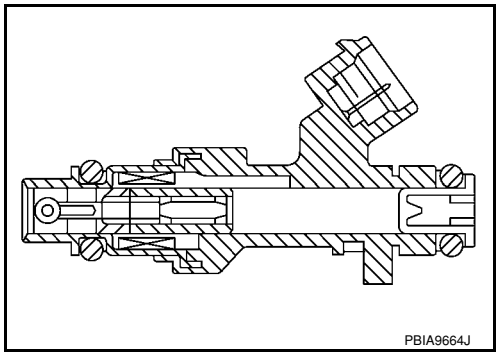

CONSULT-II Reference Value in Data Monitor Mode

INFOID:0000000001703060

Specification data are reference values.

MONITOR ITEM	CONDITION		SPECIFICATION
B/FUEL SCHDL	See EC-127.		
INJ PULSE-B1	• Engine: After warming up • Air conditioner switch: OFF • Shift lever: P or N (A/T, CVT), Neutral (M/T) • No load	Idle	2.0 - 3.0 msec
		2,000 rpm	1.9 - 2.9 msec

Wiring Diagram

INFOID:0000000001703061

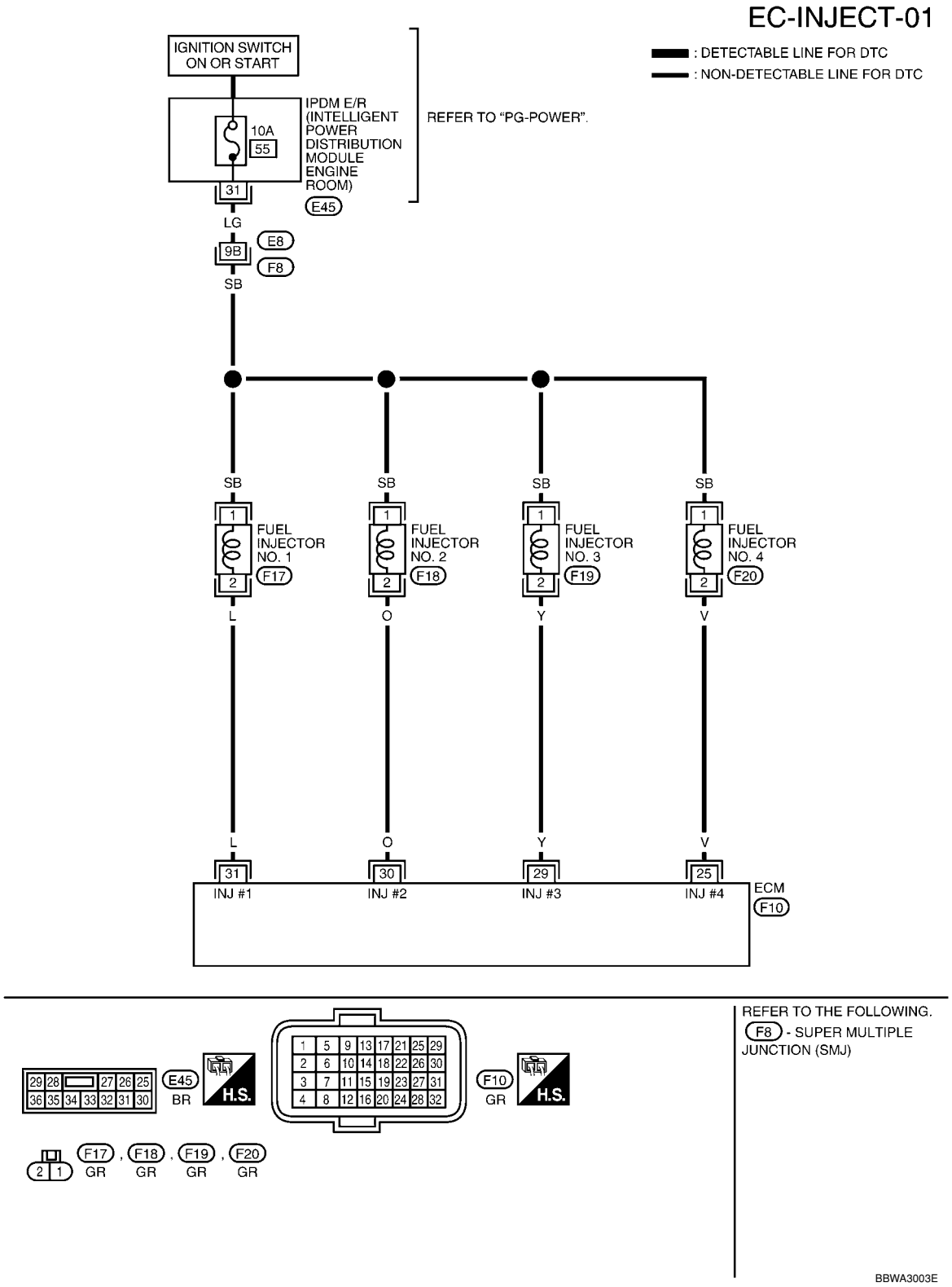

Specification data are reference values and are measured between each terminal and ground.
Pulse signal is measured by CONSULT-II.

CAUTION:

Do not use ECM ground terminals when measuring input/output voltage. Doing so may result in damage to the ECM's transistor. Use a ground other than ECM terminals, such as the ground.

TERMINAL NO.	WIRE COLOR	ITEM	CONDITION	DATA (DC Voltage)
25 29 30 31	V Y O L	Fuel injector No. 4 Fuel injector No. 3 Fuel injector No. 2 Fuel injector No. 1	**[Engine is running]** • **Warm-up condition** • Idle speed **NOTE:** The pulse cycle changes depending on rpm at idle	BATTERY VOLTAGE (11 - 14V)★ 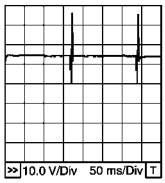 PBIB0529E
			[Engine is running] • **Warm-up condition** • Engine speed: 2,000 rpm	BATTERY VOLTAGE (11 - 14V)★ 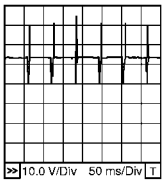 PBIA4943J

★: Average voltage for pulse signal (Actual pulse signal can be confirmed by oscilloscope.)

Diagnosis Procedure

INFOID:0000000001703062

1. INSPECTION START

Turn ignition switch to START.
Is any cylinder ignited?

Yes or No

Yes >> GO TO 2.
No >> GO TO 3.

2. CHECK OVERALL FUNCTION

With CONSULT-II

1. Start engine.
2. Perform “POWER BALANCE” in “ACTIVE TEST” mode with CONSULT-II.
3. Make sure that each circuit produces a momentary engine speed drop.

ACTIVE TEST	
POWER BALANCE	
MONITOR	
ENG SPEED	XXX rpm
MAS A/F SE-B1	XXX V

PBIB0133E

Without CONSULT-II

1. Start engine.

2. Listen to each fuel injector operating sound.

Clicking noise should be heard.

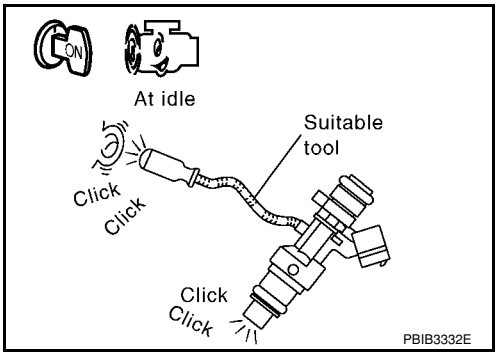

OK or NG

OK >> **INSPECTION END**
NG >> GO TO 3.

3. CHECK FUEL INJECTOR POWER SUPPLY CIRCUIT

1. Turn ignition switch OFF.
2. Disconnect fuel injector (1) harness connector.
3. Turn ignition switch ON.

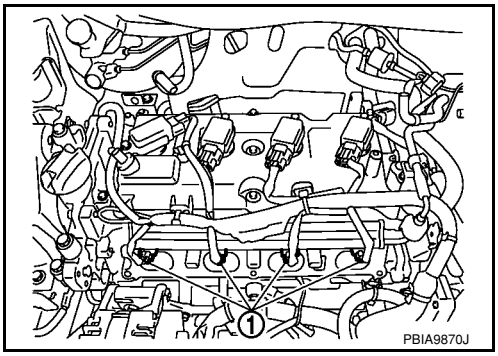

4. Check voltage between fuel injector terminal 1 and ground with CONSULT-II or tester.

Voltage: Battery voltage

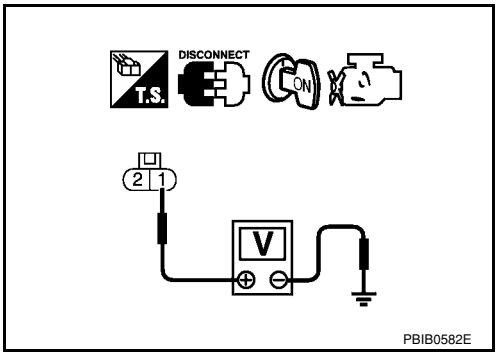

OK or NG

OK >> GO TO 5.
NG >> GO TO 4.

4. DETECT MALFUNCTIONING PART

Check the following.
- Harness connectors E8, F8
- IPDM E/R harness connector E45
- 10A fuse
- Harness for open or short between fuel injector and fuse

>> Repair open circuit or short to ground or short to power in harness or connectors.

5. CHECK FUEL INJECTOR OUTPUT SIGNAL CIRCUIT FOR OPEN AND SHORT

1. Turn ignition switch OFF.
2. Disconnect ECM harness connector.
3. Check harness continuity between fuel injector terminal 2 and ECM terminals 25, 29, 30, 31. Refer to Wiring Diagram.

Continuity should exist.

4. Also check harness for short to ground and short to power.

OK or NG

OK >> GO TO 6.
NG >> Repair open circuit or short to ground or short to power in harness or connectors.

6. CHECK FUEL INJECTOR

Refer to EC-525, "Component Inspection".

OK or NG

OK >> GO TO 7.
NG >> Replace fuel injector.

7. CHECK INTERMITTENT INCIDENT

Refer to EC-136.

>> **INSPECTION END**

Component Inspection

INFOID:0000000001703063

FUEL INJECTOR

1. Disconnect fuel injector harness connector.
2. Check resistance between terminals as shown in the figure.

Resistance: 11.1 - 14.5Ω [at 10 - 60°C (50 - 140°F)]

3. If NG, replace fuel injector.

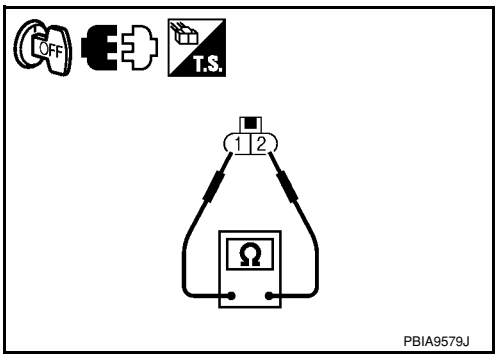

Removal and Installation

INFOID:0000000001703064

FUEL INJECTOR

Refer to EM-33.

FUEL PUMP

Description

INFOID:0000000001703065

SYSTEM DESCRIPTION

Sensor	Input Signal to ECM	ECM Function	Actuator
Crankshaft position sensor (POS) Camshaft position sensor (PHASE)	Engine speed*	Fuel pump control	Fuel pump relay
Battery	Battery voltage*		

*: ECM determines the start signal status by the signals of engine speed and battery voltage.

The ECM activates the fuel pump for several seconds after the ignition switch is turned ON to improve engine startability. If the ECM receives a engine speed signal from the crankshaft position sensor (POS) and camshaft position sensor (PHASE), it knows that the engine is rotating, and causes the pump to operate. If the engine speed signal is not received when the ignition switch is ON, the engine stalls. The ECM stops pump operation and prevents battery discharging, thereby improving safety. The ECM does not directly drive the fuel pump. It controls the ON/OFF fuel pump relay, which in turn controls the fuel pump.

Condition	Fuel pump operation
Ignition switch is turned to ON	Operates for 1 second
Engine running and cranking	Operates
Engine: Stopped	Stops in 1.5 seconds
Except as shown above	Stops

COMPONENT DESCRIPTION

A turbine type design fuel pump is used in the fuel tank.

- Fuel level sensor unit and fuel pump (1)
- Fuel pressure regulator (2)
- Fuel level sensor (3)
- Fuel tank temperature sensor (4)

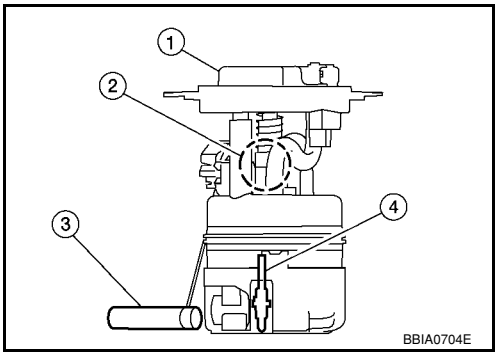

CONSULT-II Reference Value in Data Monitor Mode

INFOID:0000000001703066

Specification data are reference values.

MONITOR ITEM	CONDITION	SPECIFICATION
FUEL PUMP RLY	• For 1 second after turning ignition switch ON • Engine running or cranking	ON
	• Except above conditions	OFF

Wiring Diagram

INFOID:0000000001703067

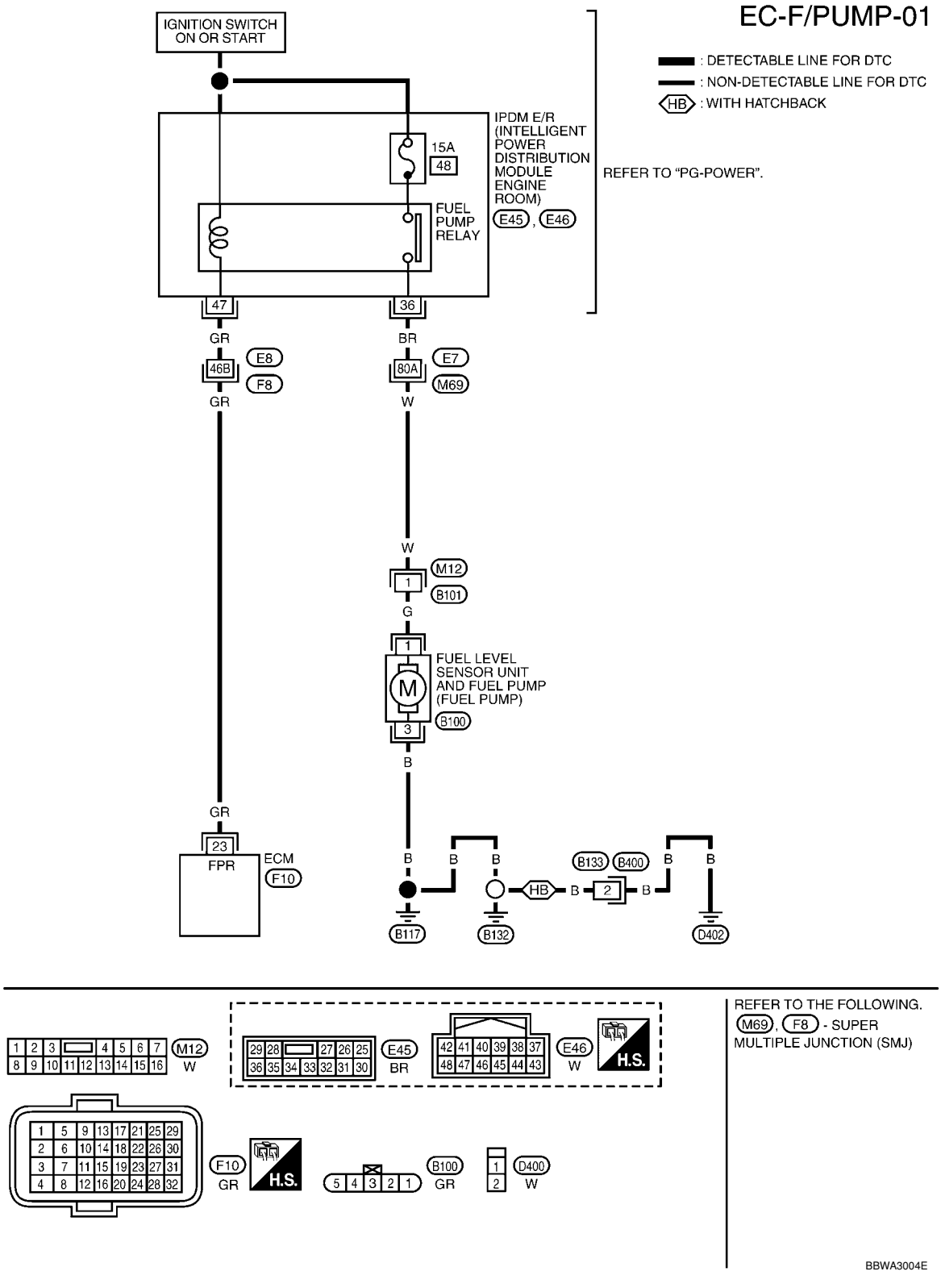

Specification data are reference values and are measured between each terminal and ground.

CAUTION:

Do not use ECM ground terminals when measuring input/output voltage. Doing so may result in damage to the ECM's transistor. Use a ground other than ECM terminals, such as the ground.

TERMINAL NO.	WIRE COLOR	ITEM	CONDITION	DATA (DC Voltage)
23	GR	Fuel pump relay	**[Ignition switch: ON]** • For 1 second after turning ignition switch ON **[Engine is running]**	0 - 1.0V
			[Ignition switch: ON] • More than 1 second after turning ignition switch ON	BATTERY VOLTAGE (11 - 14V)

Diagnosis Procedure

INFOID:0000000001703068

1. CHECK OVERALL FUNCTION

1. Turn ignition switch ON.
2. Pinch fuel feed hose (1) with two fingers.
- Illustration shows the view with intake air duct removed.

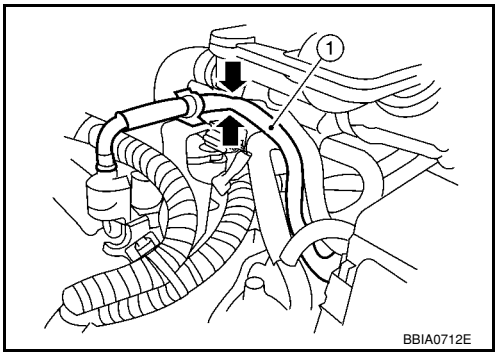

Fuel pressure pulsation should be felt on the fuel feed hose for 1 second after ignition switch is turned ON.

OK or NG

OK >> **INSPECTION END**
NG >> GO TO 2.

2. CHECK FUEL PUMP POWER SUPPLY CIRCUIT-I

1. Turn ignition switch OFF.
2. Disconnect ECM harness connector.
3. Turn ignition switch ON.
4. Check voltage between ECM terminal 23 and ground with CONSULT-II or tester.

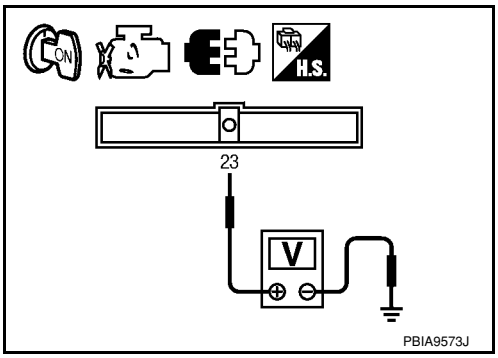

Voltage: Battery voltage

OK or NG

OK >> GO TO 5.
NG >> GO TO 3.

3. CHECK FUEL PUMP POWER SUPPLY CIRCUIT-II

1. Turn ignition switch OFF.
2. Disconnect IPDM E/R harness connector E46.
3. Turn ignition switch ON.
4. Check voltage between IPDM E/R terminal 47 and ground with CONSULT-II or tester.

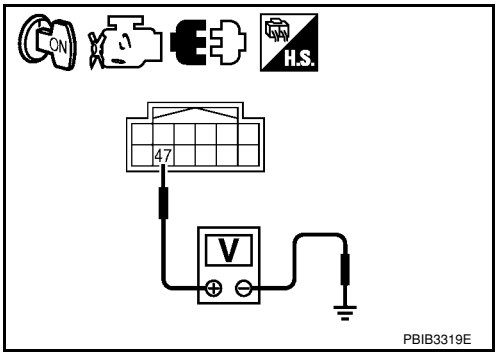

Voltage: Battery voltage

OK or NG

OK >> GO TO 4.
NG >> GO TO 11.

4. DETECT MALFUNCTIONING PART

Check the following.
- Harness connectors E8, F8
- Harness for open or short between IPDM E/R and ECM

>> Repair open circuit or short to ground or short to power in harness or connectors.

5. CHECK FUEL PUMP POWER SUPPLY CIRCUIT-III

1. Turn ignition switch OFF.
2. Reconnect all harness connectors disconnected.
3. Disconnect “fuel level sensor unit and fuel pump” harness connector (1).
- Illustration shows the view with inspection hole cover removed.
4. Turn ignition switch ON.

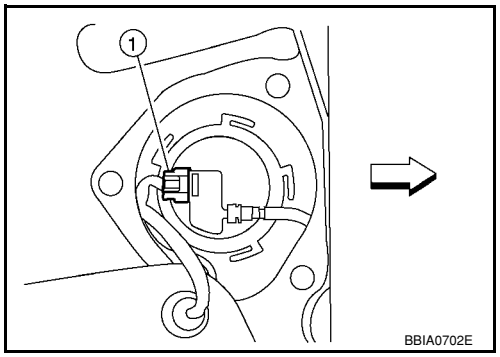

5. Check voltage between “fuel level sensor unit and fuel pump” terminal 1 and ground with CONSULT-II or tester.

Voltage: Battery voltage should exist for 1 second after ignition switch is turned ON.

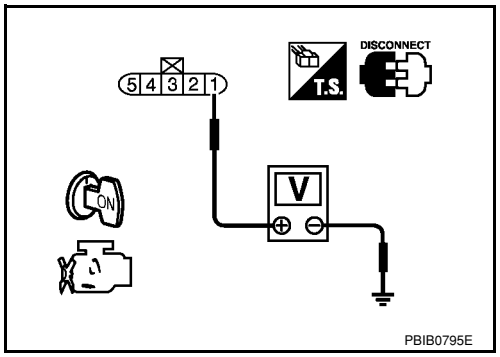

OK or NG

OK >> GO TO 9.
NG >> GO TO 6.

6. CHECK 15A FUSE

1. Turn ignition switch OFF.
2. Disconnect 15A fuse.
3. Check 15A fuse.

OK or NG

OK >> GO TO 7.
NG >> Replace fuse.

7. CHECK FUEL PUMP POWER SUPPLY CIRCUIT-IV

1. Disconnect IPDM E/R harness connector E45.
2. Check harness continuity between IPDM E/R terminal 36 and “fuel level sensor unit and fuel pump” terminal 1. Refer to Wiring Diagram.

Continuity should exist.

3. Also check harness for short to ground and short to power.

OK or NG

OK >> GO TO 13.
NG >> GO TO 8.

8. DETECT MALFUNCTIONING PART

Check the following.
- Harness connectors M69, E7
- Harness connectors M12, B101

- Harness for open or short between IPDM E/R and “fuel level sensor unit and fuel pump”

>> Repair open circuit or short to ground or short to power in harness or connectors.

9. CHECK FUEL PUMP GROUND CIRCUIT

1. Check harness continuity between “fuel level sensor unit and fuel pump” terminal 3 and ground. Refer to Wiring Diagram.

Continuity should exist.

2. Also check harness for short to power.

OK or NG

OK >> GO TO 10.
NG >> Repair or replace harness or connectors.

10. CHECK FUEL PUMP

Refer to EC-530, "Component Inspection".

OK or NG

OK >> GO TO 11.
NG >> Replace fuel pump.

11. CHECK INTERMITTENT INCIDENT

Refer to EC-136.

OK or NG

OK >> Replace IPDM E/R. Refer to PG-26, "Removal and Installation of IPDM E/R".
NG >> Repair or replace harness or connectors.

Component Inspection

INFOID:0000000001703069

FUEL PUMP

1. Disconnect “fuel level sensor unit and fuel pump” harness connector.
2. Check resistance between “fuel level sensor unit and fuel pump” terminals 1 and 3.

Resistance: Approximately 0.2 - 5.0Ω [at 25°C (77°F)]

3. If NG, replace “fuel level sensor unit and fuel pump”.

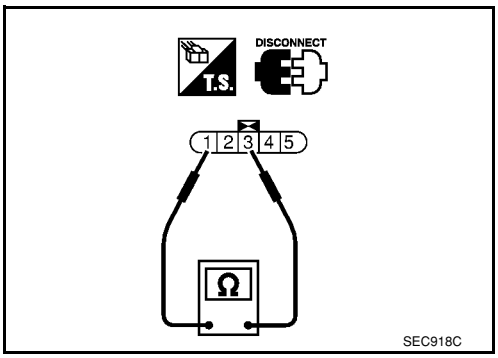

Removal and Installation

INFOID:0000000001703070

FUEL PUMP

Refer to FL-5.

IGNITION SIGNAL

Component Description

INFOID:0000000001703071

IGNITION COIL & POWER TRANSISTOR

The ignition signal from the ECM is sent to and amplified by the power transistor. The power transistor turns ON and OFF the ignition coil (1) primary circuit. This ON/OFF operation induces the proper high voltage in the coil secondary circuit.

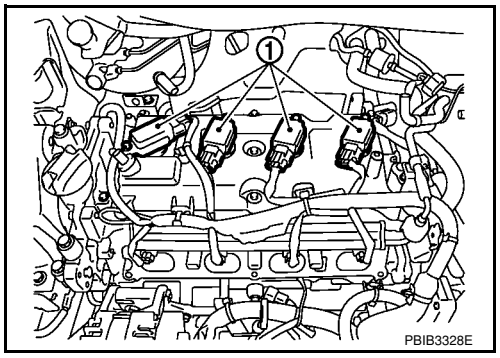

Wiring Diagram

INFOID:0000000001703072

EC-IGNSYS-01

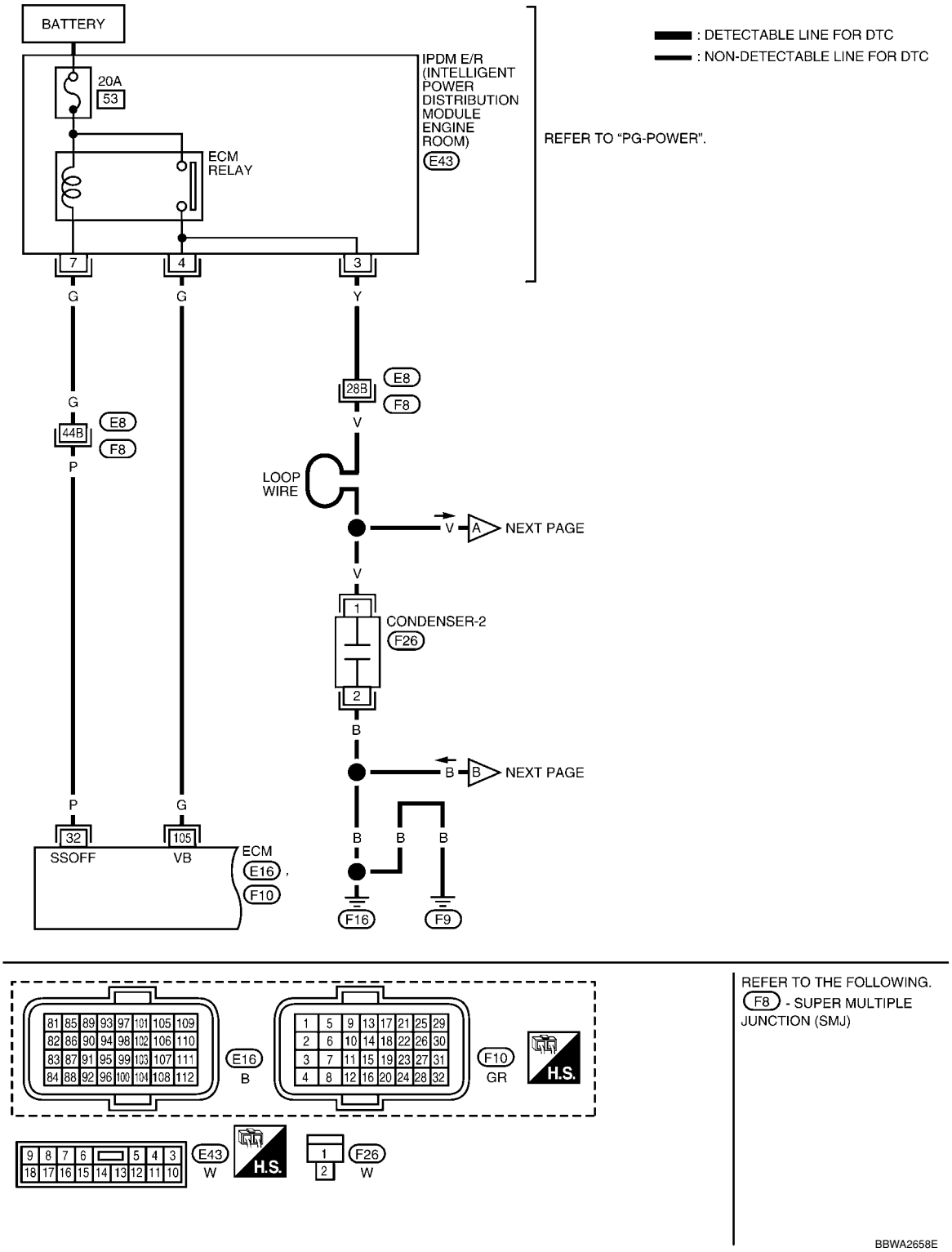

Specification data are reference values and are measured between each terminal and ground.

CAUTION:

Do not use ECM ground terminals when measuring input/output voltage. Doing so may result in damage to the ECM's transistor. Use a ground other than ECM terminals, such as the ground.

TERMINAL NO.	WIRE COLOR	ITEM	CONDITION	DATA (DC Voltage)
32	P	ECM relay (Self shut-off)	**[Engine is running]** **[Ignition switch: OFF]** • For a few seconds after turning ignition switch OFF	0 - 1.0V
			[Ignition switch: OFF] • More than a few seconds after turning ignition switch OFF	BATTERY VOLTAGE (11 - 14V)
105	G	Power supply for ECM	**[Ignition switch: ON]**	BATTERY VOLTAGE (11 - 14V)

EC-IGNSYS-02

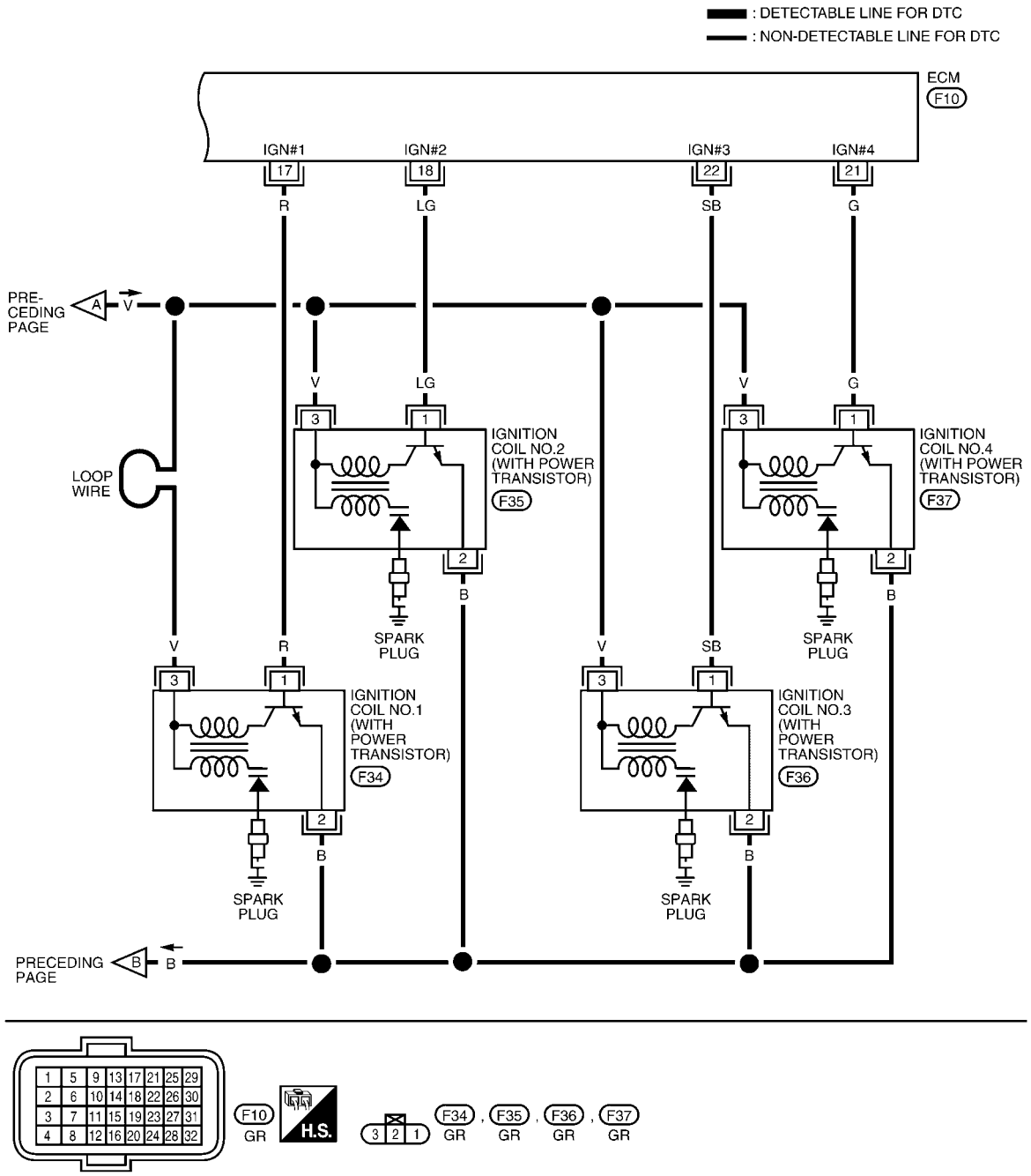

Specification data are reference values and are measured between each terminal and ground.
Pulse signal is measured by CONSULT-II.

CAUTION:

Do not use ECM ground terminals when measuring input/output voltage. Doing so may result in damage to the ECM's transistor. Use a ground other than ECM terminals, such as the ground.

TERMINAL NO.	WIRE COLOR	ITEM	CONDITION	DATA (DC Voltage)
17 18 21 22	R LG G SB	Ignition signal No. 1 Ignition signal No. 2 Ignition signal No. 4 Ignition signal No. 3	**[Engine is running]** • **Warm-up condition** • Idle speed **NOTE:** The pulse cycle changes depending on rpm at idle	0 - 0.3V★ 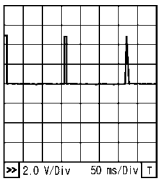 PBIA9265J
			[Engine is running] • **Warm-up condition** • Engine speed: 2,500 rpm	0.2 - 0.5V★ 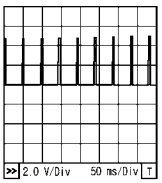 PBIA9266J

★: Average voltage for pulse signal (Actual pulse signal can be confirmed by oscilloscope.)

Diagnosis Procedure

INFOID:0000000001703073

1. CHECK ENGINE START

Turn ignition switch OFF, and restart engine.
Is engine running?

Yes or No

Yes (With CONSULT-II)>>GO TO 2.
Yes (Without CONSULT-II)>>GO TO 3.
No >> GO TO 4.

2. CHECK OVERALL FUNCTION

With CONSULT-II

1. Perform “POWER BALANCE” in “ACTIVE TEST” mode with CONSULT-II.
2. Make sure that each circuit produces a momentary engine speed drop.

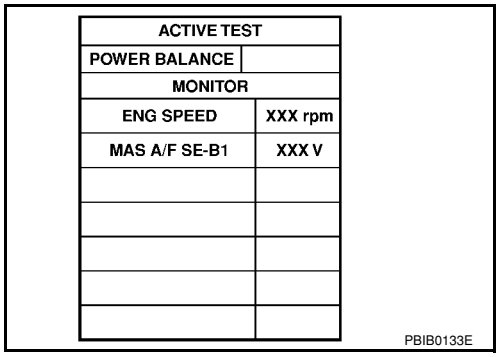

ACTIVE TEST	
POWER BALANCE	
MONITOR	
ENG SPEED	XXX rpm
MAS A/F SE-B1	XXX V

PBIB0133E

OK Yes or No

OK >> **INSPECTION END**
NG >> GO TO 10.

3. CHECK OVERALL FUNCTION

Without CONSULT-II

1. Let engine idle.

2. Read the voltage signal between ECM terminals 17, 18, 21, 22 and ground with an oscilloscope.
3. Verify that the oscilloscope screen shows the signal wave as shown below.
   NOTE:
   The pulse cycle changes depending on rpm at idle.

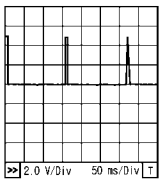

PBIA9265J

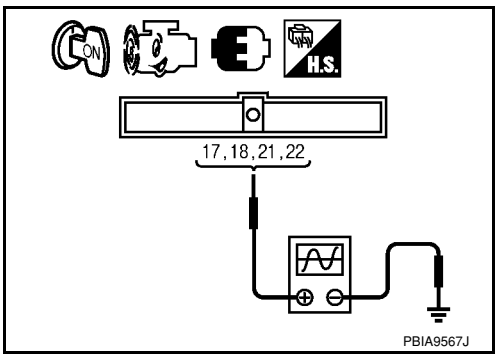

PBIA9567J

OK or NG

OK >> **INSPECTION END**
NG >> GO TO 10.

4. CHECK IGNITION COIL POWER SUPPLY CIRCUIT-I

1. Turn ignition switch OFF, wait at least 10 seconds and then turn ON.
2. Check voltage between ECM terminal 105 and ground with CONSULT-II or tester.

Voltage: Battery voltage

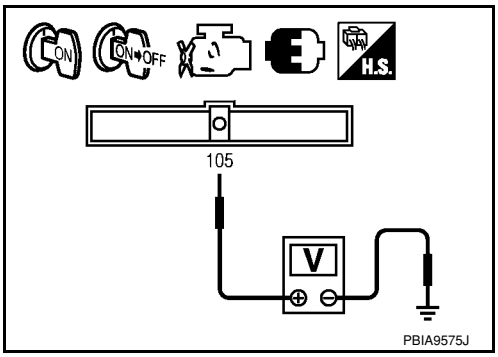

PBIA9575J

OK or NG

OK >> GO TO 5.
NG >> Go to EC-137.

5. CHECK IGNITION COIL POWER SUPPLY CIRCUIT-II

1. Turn ignition switch OFF.
2. Disconnect condenser-2 (1) harness connector.
3. Turn ignition switch ON.

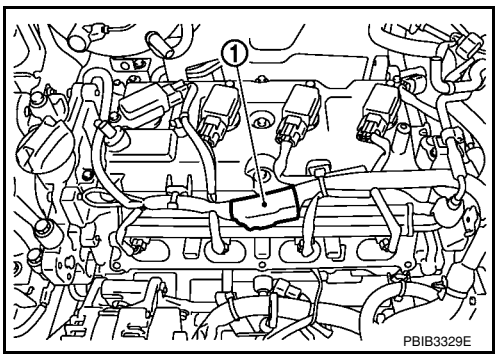

PBIB3329E

4. Check voltage between condenser-2 terminal 1 and ground with CONSULT-II or tester.

Voltage: Battery voltage

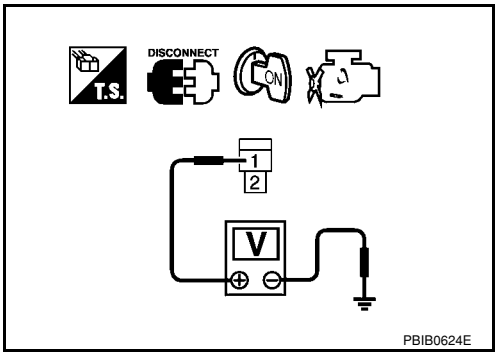

PBIB0624E

OK or NG

OK >> GO TO 8.
NG >> GO TO 6.

6. CHECK IGNITION COIL POWER SUPPLY CIRCUIT-III

1. Turn ignition switch OFF.

2. Disconnect IPDM E/R harness connector E43.
3. Check harness continuity between IPDM E/R terminal 3 and condenser-2 terminal 1.
   Refer to Wiring Diagram.

   Continuity should exist.

4. Also check harness for short to ground and short to power.

OK or NG

OK >> Go to EC-137.
NG >> GO TO 7.

7. DETECT MALFUNCTIONING PART

Check the following.
- Harness connectors E8, F8
- Harness for open or short between IPDM E/R and condenser-2

>> Repair open circuit or short to ground or short to power in harness or connectors.

8. CHECK CONDENSER-2 GROUND CIRCUIT FOR OPEN AND SHORT

1. Turn ignition switch OFF.
2. Check harness continuity between condenser-2 terminal 2 and ground.
   Refer to Wiring Diagram.

   Continuity should exist.

3. Also check harness for short to power.

OK or NG

OK >> GO TO 9.
NG >> Repair open circuit or short to power in harness or connectors.

9. CHECK CONDENSER-2

Refer to EC-538, "Component Inspection"

OK or NG

OK >> GO TO 10.
NG >> Replace condenser-2.

10. CHECK IGNITION COIL POWER SUPPLY CIRCUIT-IV

1. Turn ignition switch OFF.
2. Reconnect all harness connectors disconnected.
3. Disconnect ignition coil (1) harness connector.
4. Turn ignition switch ON.

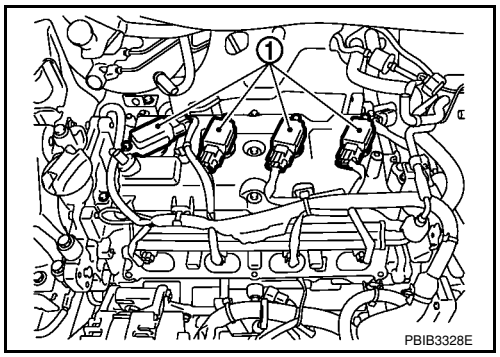

5. Check voltage between ignition coil terminal 3 and ground with CONSULT-II or tester.

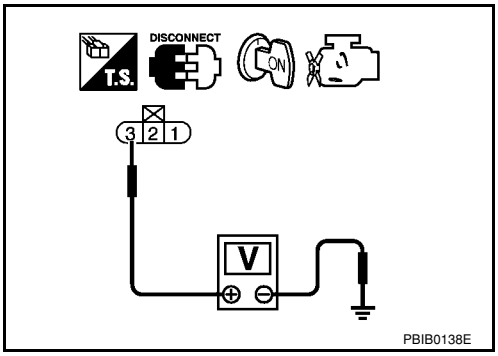

Voltage: Battery voltage

OK or NG

OK >> GO TO 12.
NG >> GO TO 11.

11. DETECT MALFUNCTIONING PART

Check the following.
- Harness connector F8
- Harness for open or short between ignition coil and harness connector F8

>> Repair or replace harness or connectors.

12. CHECK IGNITION COIL GROUND CIRCUIT FOR OPEN AND SHORT

1. Turn ignition switch OFF.
2. Check harness continuity between ignition coil terminal 2 and ground.
   Refer to Wiring Diagram.

Continuity should exist.

3. Also check harness for short to power.

OK or NG

OK >> GO TO 13.
NG >> Repair open circuit or short to power in harness or connectors.

13. CHECK IGNITION COIL OUTPUT SIGNAL CIRCUIT FOR OPEN AND SHORT

1. Disconnect ECM harness connector.
2. Check harness continuity between ECM terminals 17, 18, 21, 22 and ignition coil terminal 1.
   Refer to Wiring Diagram.

Continuity should exist.

3. Also check harness for short to ground and short to power.

OK or NG

OK >> GO TO 14.
NG >> Repair open circuit or short to ground or short to power in harness or connectors.

14. CHECK IGNITION COIL WITH POWER TRANSISTOR

Refer to EC-538, "Component Inspection".

OK or NG

OK >> GO TO 15.
NG >> Replace ignition coil with power transistor.

15. CHECK INTERMITTENT INCIDENT

Refer to EC-136.

>> **INSPECTION END**

Component Inspection

INFOID:0000000001703074

IGNITION COIL WITH POWER TRANSISTOR

CAUTION:

Do the following procedure in the place where ventilation is good without the combustible.

1. Turn ignition switch OFF.
2. Disconnect ignition coil harness connector.
3. Check resistance between ignition coil terminals as follows.

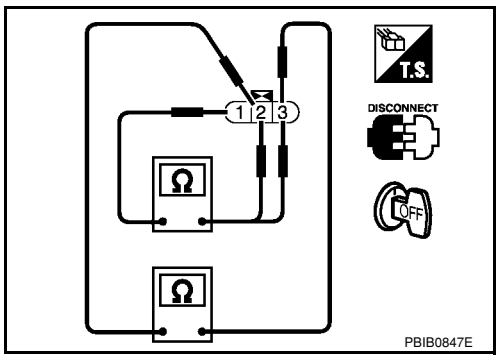

Terminal No. (Polarity)	Resistance Ω [at 25°C (77°F)]
1 and 2	Except 0 or ∞
1 and 3	Except 0
2 and 3	

4. If NG, replace ignition coil with power transistor.
   If OK, go to next step.
5. Turn ignition switch OFF.
6. Reconnect all harness connectors disconnected.
7. Remove fuel pump fuse (1) in IPDM E/R (2) to release fuel pressure.
   NOTE:
   Do not use CONSULT-II to release fuel pressure, or fuel pressure applies again during the following procedure.
- ⇦: Vehicle front

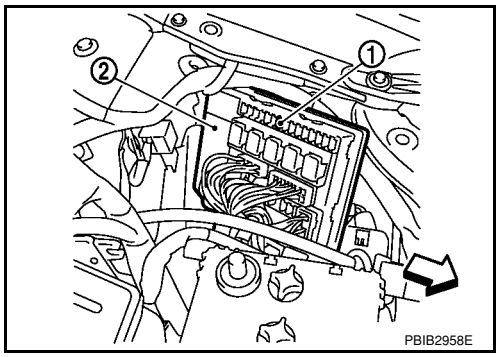

8. Start engine.
9. After engine stalls, crank it two or three times to release all fuel pressure.
10. Turn ignition switch OFF.
11. Remove all ignition coil harness connectors to avoid the electrical discharge from the ignition coils.
12. Remove ignition coil and spark plug of the cylinder to be checked.
13. Crank engine for 5 seconds or more to remove combustion gas in the cylinder.
14. Connect spark plug and harness connector to ignition coil.
15. Fix ignition coil using a rope etc. with gap of 13 - 17 mm between the edge of the spark plug and grounded metal portion as shown in the figure.
16. Crank engine for about 3 seconds, and check whether spark is generated between the spark plug and the grounded metal portion.

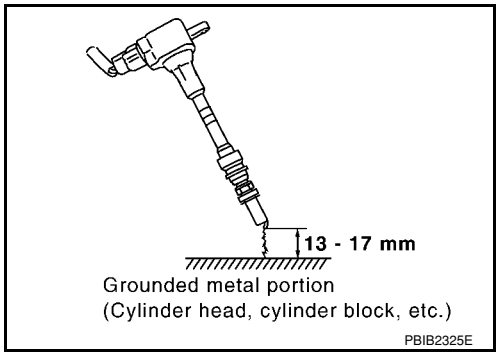

Spark should be generated.

CAUTION:
- **Do not approach to the spark plug and the ignition coil within 50cm. Be careful not to get an electrical shock while checking, because the electrical discharge voltage becomes 20kV or more.**
- **It might cause to damage the ignition coil if the gap of more than 17 mm is taken.**

NOTE:
When the gap is less than 13 mm, the spark might be generated even if the coil is malfunctioning.

17. If NG, replace ignition coil with power transistor.

CONDENSER-2

1. Turn ignition switch OFF.
2. Disconnect condenser-2 harness connector.

3. Check resistance between condenser-2 terminals 1 and 2.

Resistance: Above 1 MΩ [at 25°C (77°F)]

4. If NG, replace condenser-2.

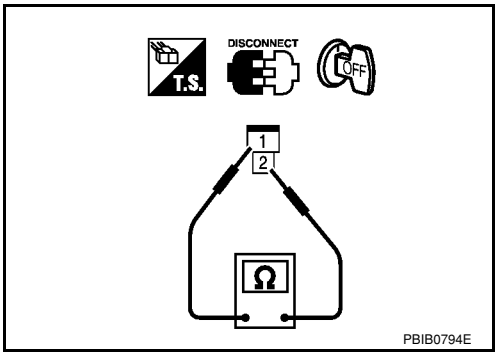

Removal and Installation

INFOID:0000000001703075

IGNITION COIL WITH POWER TRANSISTOR
Refer to EM-30.

REFRIGERANT PRESSURE SENSOR

Component Description

INFOID:0000000001703076

The refrigerant pressure sensor (1) is installed at the condenser of the air conditioner system. The sensor uses an electrostatic volume pressure transducer to convert refrigerant pressure to voltage. The voltage signal is sent to ECM, and ECM controls cooling fan system.

- ⇦: Vehicle front

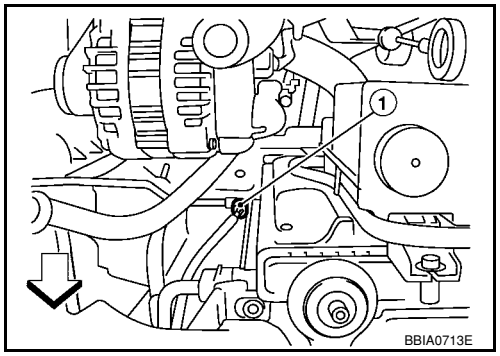

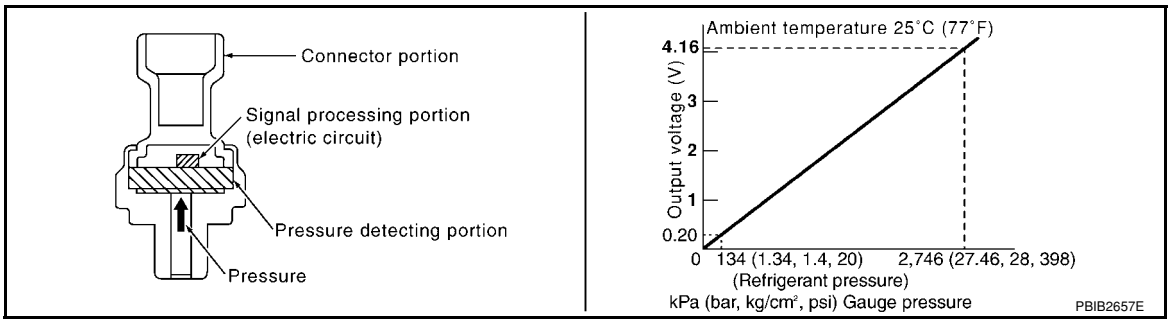

Wiring Diagram

INFOID:0000000001703077

EC-RP/SEN-01

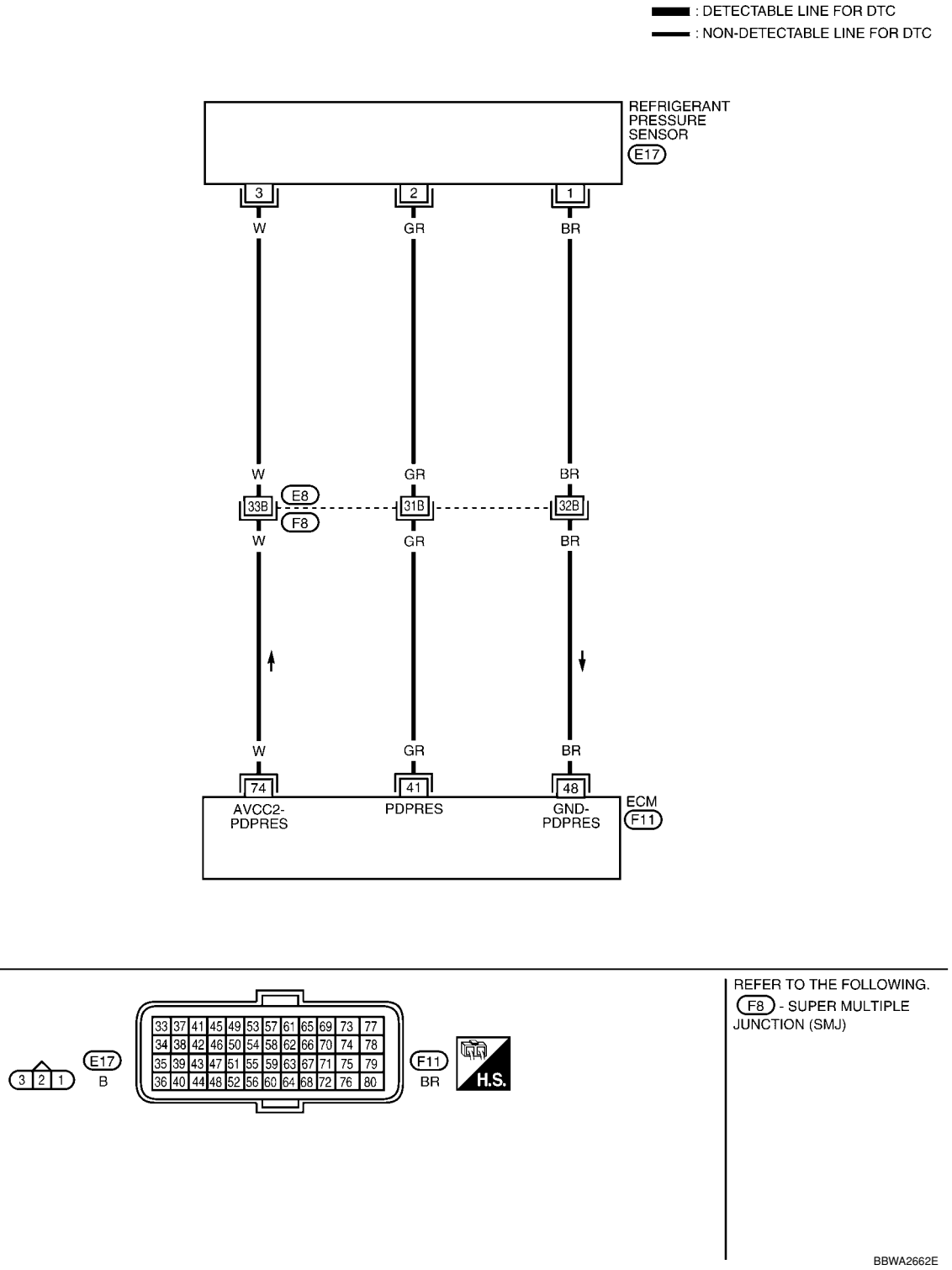

Specification data are reference values and are measured between each terminal and ground.

CAUTION:

Do not use ECM ground terminals when measuring input/output voltage. Doing so may result in damage to the ECM's transistor. Use a ground other than ECM terminals, such as the ground.

TERMINAL NO.	WIRE COLOR	ITEM	CONDITION	DATA (DC Voltage)
41	GR	Refrigerant pressure sensor	**[Engine is running]** • **Warm-up condition** • Both A/C switch and blower fan switch: ON (Compressor operates)	1.0 - 4.0V
48	BR	Sensor ground (Refrigerant pressure sensor)	**[Engine is running]** • **Warm-up condition** • Idle speed	Approximately 0V
74	W	Sensor power supply (Refrigerant pressure sensor)	**[Ignition switch: ON]**	Approximately 5V

Diagnosis Procedure

INFOID:0000000001703078

1. CHECK REFRIGERANT PRESSURE SENSOR OVERALL FUNCTION

1. Start engine and warm it up to normal operating temperature.
2. Turn A/C switch and blower fan switch ON.
3. Check voltage between ECM terminal 41 and ground with CONSULT-II or tester.

Voltage: 1.0 - 4.0V

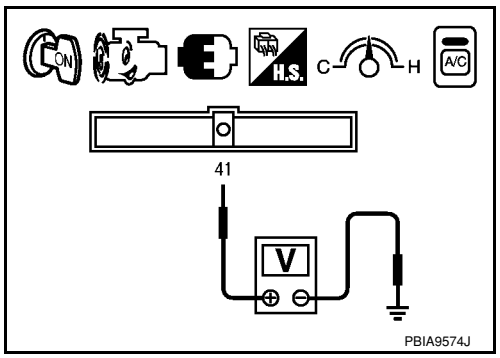

OK or NG

OK >> **INSPECTION END**
NG >> GO TO 2.

2. CHECK GROUND CONNECTIONS

1. Turn A/C switch and blower fan switch OFF.
2. Stop engine and turn ignition switch OFF.
3. Loosen and retighten ground screw on the body.
   Refer to EC-142, "Ground Inspection".

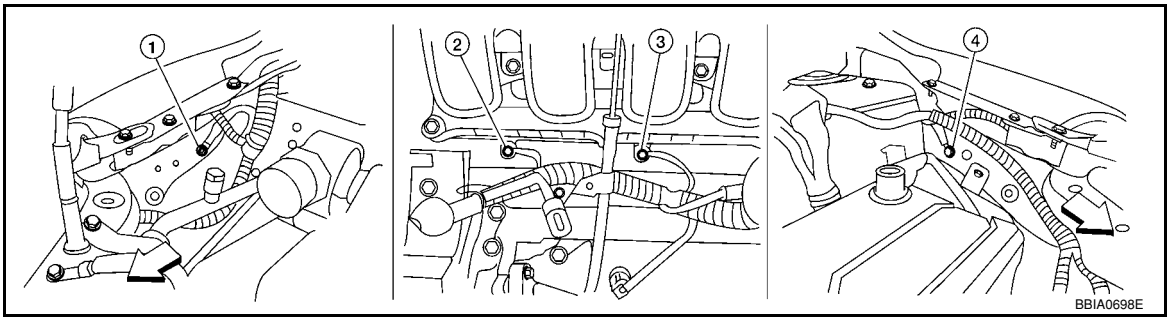

⇦: Vehicle front

1. Body ground E24
2. Engine ground F9
3. Engine ground F16
4. Body ground E15

OK or NG

OK >> GO TO 3.
NG >> Repair or replace ground connections.

3. CHECK REFRIGERANT PRESSURE SENSOR POWER SUPPLY CIRCUIT

1. Disconnect refrigerant pressure sensor (1) harness connector.
- ⇦: Vehicle front
2. Turn ignition switch ON.

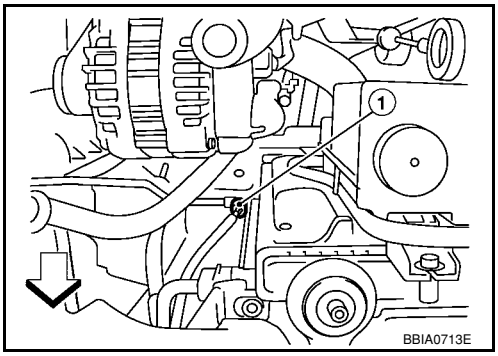

3. Check voltage between refrigerant pressure sensor terminal 3 and ground with CONSULT-II or tester.

Voltage: Approximately 5V

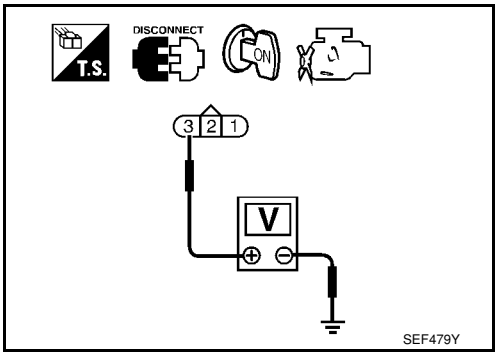

OK or NG

OK >> GO TO 5.
NG >> GO TO 4.

4. DETECT MALFUNCTIONING PART

Check the following.
- Harness connectors E8, F8
- Harness for open or short between refrigerant pressure sensor and ECM

>> Repair open circuit or short to ground or short to power in harness or connectors.

5. CHECK REFRIGERANT PRESSURE SENSOR GROUND CIRCUIT FOR OPEN AND SHORT

1. Turn ignition switch OFF.
2. Disconnect ECM harness connector.
3. Check harness continuity between refrigerant pressure sensor terminal 1 and ECM terminal 48. Refer to Wiring Diagram.

Continuity should exist.

4. Also check harness for short to ground and short to power.

OK or NG

OK >> GO TO 7.
NG >> GO TO 6.

6. DETECT MALFUNCTIONING PART

Check the following.
- Harness connectors E8, F8
- Harness for open or short between refrigerant pressure sensor and ECM

>> Repair open circuit or short to ground or short to power in harness or connectors.

7. CHECK REFRIGERANT PRESSURE SENSOR INPUT SIGNAL CIRCUIT FOR OPEN AND SHORT

1. Check harness continuity between refrigerant pressure sensor terminal 2 and ECM terminal 41. Refer to Wiring Diagram.

Continuity should exist.

2. Also check harness for short to ground and short to power.

OK or NG

OK >> GO TO 9.
NG >> GO TO 8.

8. DETECT MALFUNCTIONING PART

Check the following.
- Harness connectors E8, F8
- Harness for open or short between refrigerant pressure sensor and ECM

>> Repair open circuit or short to ground or short to power in harness or connectors.

9. CHECK INTERMITTENT INCIDENT

Refer to EC-136.

OK or NG

OK >> Replace refrigerant pressure sensor.
NG >> Repair or replace.

Removal and Installation

INFOID:0000000001703079

REFRIGERANT PRESSURE SENSOR

Refer to MTC-81, "Removal and Installation of Refrigerant Pressure Sensor".

MIL AND DATA LINK CONNECTOR

Wiring Diagram

INFOID:0000000001703080

EC-MIL/DL-02

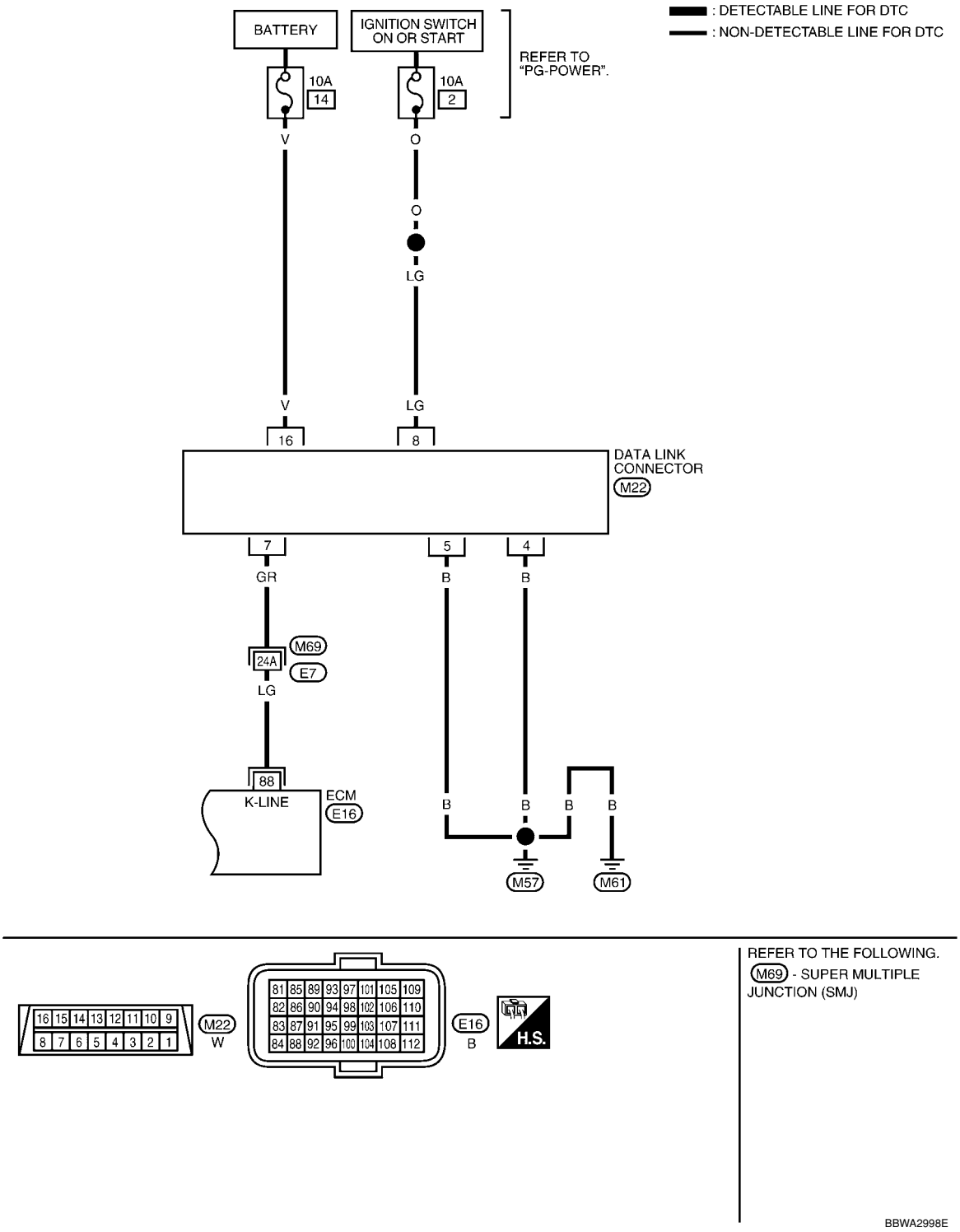

EC-MIL/DL-02

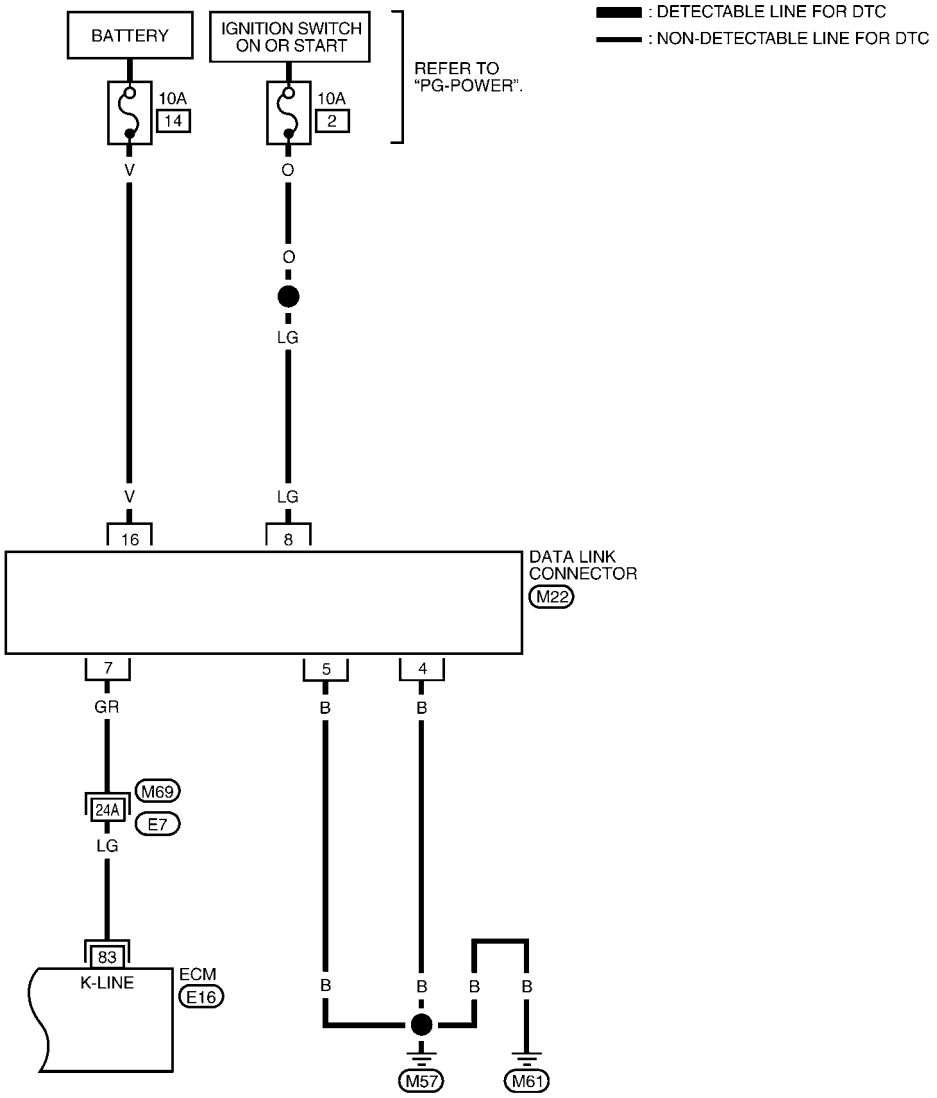

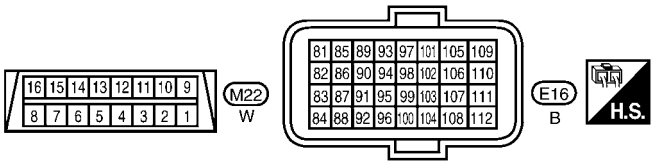

REFER TO THE FOLLOWING.
M69 - SUPER MULTIPLE JUNCTION (SMJ)

BBWA2668E

SERVICE DATA AND SPECIFICATIONS (SDS)

Fuel Pressure

INFOID:0000000001703081

Fuel pressure at idle	Approximately 350 kPa (3.57 kg/cm^2, 51 psi)

Idle Speed and Ignition Timing

INFOID:0000000001703082

Target idle speed	A/T	No load* (in P or N position)	700 ± 50 rpm
	CVT	No load* (In P or N position)	
	M/T	No load* (in Neutral position)	
Air conditioner: ON	A/T	In P or N position	850 rpm or more
	CVT	In P or N position	
	M/T	In Neutral position	
Ignition timing	A/T	In P or N position	13 ± 5° BTDC
	CVT	In P or N position	
	M/T	In Neutral position	

*: Under the following conditions:

- Air conditioner switch: OFF
- Electric load: OFF (Lights, heater fan & rear window defogger)
- Steering wheel: Kept in straight-ahead position

Calculated Load Value

INFOID:0000000001703083

	Calculated load value% (Using CONSULT-II or GST)
At idle	10 - 35
At 2,500 rpm	10 - 35

Mass Air Flow Sensor

INFOID:0000000001703084

Supply voltage	Battery voltage (11 - 14V)
Output voltage at idle	1.0 - 1.3*V
Mass air flow (Using CONSULT-II or GST)	1.0 - 4.0 g·m/sec at idle* 2.0 - 10.0 g·m/sec at 2,500 rpm*

*: Engine is warmed up to normal operating temperature and running under no load.

Intake Air Temperature Sensor

INFOID:0000000001703085

Temperature °C (°F)	Resistance kΩ
25 (77)	1.800 - 2.200

Engine Coolant Temperature Sensor

INFOID:0000000001703086

Temperature °C (°F)	Resistance kΩ
20 (68)	2.1 - 2.9
50 (122)	0.68 - 1.00
90 (194)	0.236 - 0.260

Air Fuel Ratio (A/F) Sensor 1 Heater

INFOID:0000000001703087

Resistance [at 25°C (77°F)]	1.8 - 2.44Ω

Heated Oxygen sensor 2 Heater

INFOID:0000000001703088

Resistance [at 25°C (77°F)]	3.4 - 4.4Ω

Crankshaft Position Sensor (POS)

INFOID:0000000001703089

Refer to EC-301, "Component Inspection".

Camshaft Position Sensor (PHASE)

INFOID:0000000001703090

Refer to EC-307, "Component Inspection".

Throttle Control Motor

INFOID:0000000001703091

Resistance [at 25°C (77°F)]	Approximately 1 - 15Ω

Fuel Injector

INFOID:0000000001703092

Resistance [at 10 - 60°C (50 - 140°F)]	11.4 - 14.5Ω

Fuel Pump

INFOID:0000000001703093

Resistance [at 25°C (77°F)]	Approximately 0.2 - 5.0Ω

SECTION EI
EXTERIOR & INTERIOR

CONTENTS

PRECAUTION 3

PRECAUTIONS 3
- Precaution for Supplemental Restraint System (SRS) "AIR BAG" and "SEAT BELT PRE-TENSIONER" 3
- Precaution 3

PREPARATION 4

PREPARATION 4
- Special Service Tool 4
- Commercial Service Tool 4

SYMPTOM DIAGNOSIS 5

SQUEAK AND RATTLE TROUBLE DIAGNOSIS 5
- Work Flow 5
- Generic Squeak and Rattle Troubleshooting 7
- Diagnostic Worksheet 9

CLIP AND FASTENER 11
- Description 11

ON-VEHICLE REPAIR 14

FRONT BUMPER 14
- Removal and Installation 14

REAR BUMPER 16
- Component 16
- Removal and Installation - Hatchback 17
- Removal and Installation - Sedan 18

FRONT GRILLE 20
- Removal and Installation 20

COWL TOP 21
- Removal and Installation 21

FENDER PROTECTOR 23
- Component 23
- Removal and Installation 23

ROOF SIDE MOLDING 24
- Component 24
- Removal and Installation 24

DOOR OUTSIDE MOLDING 26
- Component 26
- Removal and Installation 27

CENTER MUD GUARD 29
- Removal and Installation 29

TRUNK LID FINISHER 30
- Removal and Installation 30

REAR AIR SPOILER 31
- Removal and Installation 31

DOOR FINISHER 32
- Removal and Installation 32

BACK DOOR TRIM 36
- Removal and Installation 36

BODY SIDE TRIM 37
- Component 37
- Removal and Installation 38

REAR PARCEL SHELF FINISHER 42
- Removal and Installation 42

FLOOR TRIM 43
- Removal and Installation 43

HEADLINING 45
- Component 45
- Removal and Installation - Hatchback 47
- Removal and Installation - Sedan 49

LUGGAGE FLOOR TRIM 51
- Removal and Installation 51

TRUNK ROOM TRIM & TRUNK LID FINISHER 53
Removal and Installation 53

PRECAUTION

PRECAUTIONS

Precaution for Supplemental Restraint System (SRS) "AIR BAG" and "SEAT BELT PRE-TENSIONER"

INFOID:0000000001704210

The Supplemental Restraint System such as “AIR BAG” and “SEAT BELT PRE-TENSIONER”, used along with a front seat belt, helps to reduce the risk or severity of injury to the driver and front passenger for certain types of collision. This system includes seat belt switch inputs and dual stage front air bag modules. The SRS system uses the seat belt switches to determine the front air bag deployment, and may only deploy one front air bag, depending on the severity of a collision and whether the front occupants are belted or unbelted.
Information necessary to service the system safely is included in the SR and SB section of this Service Manual.

WARNING:

- **To avoid rendering the SRS inoperative, which could increase the risk of personal injury or death in the event of a collision which would result in air bag inflation, all maintenance must be performed by an authorized NISSAN/INFINITI dealer.**
- **Improper maintenance, including incorrect removal and installation of the SRS, can lead to personal injury caused by unintentional activation of the system. For removal of Spiral Cable and Air Bag Module, see the SR section.**
- **Do not use electrical test equipment on any circuit related to the SRS unless instructed to in this Service Manual. SRS wiring harnesses can be identified by yellow and/or orange harnesses or harness connectors.**

Precaution

INFOID:0000000001704211

- When removing or disassembling any part, be careful not to damage or deform it. Protect parts which may get in the way with cloth.
- When removing parts with a screwdriver or other tool, protect parts by wrapping them with vinyl or tape.
- Keep removed parts protected with cloth.
- If a clip is deformed or damaged, replace it.
- If an unreusable part is removed, replace it with a new one.
- Tighten bolts and nuts firmly to the specified torque.
- After re-assembly has been completed, make sure each part functions correctly.
- Remove stains in the following way.
  - Water-soluble stains:
    Dip a cloth in warm water, and squeeze tightly. After wiping the stain, wipe with a soft dry cloth.
  - Oil stain:
    Dissolve a synthetic detergent in warm water (density of 2 to 3% or less), dip the cloth, then clean off the stain with the cloth. Next, dip the soft cloth in fresh water, and then squeeze it tightly. Then clean off the detergent completely. Then wipe the area with a soft dry cloth.
- Do not use any organic solvent, such as thinner or benzine.
- When performing procedures that require removal of the cowl top, cover the lower end of the windshield with a suitable protection material.

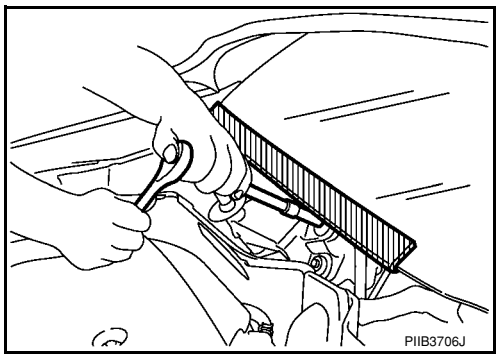

PREPARATION

PREPARATION

Special Service Tool

INFOID:0000000001704212

The actual shapes of Kent-Moore tools may differ from those of special service tools illustrated here.

Tool number (Kent-Moore No.) Tool name		Description
— (J-39570) Chassis ear	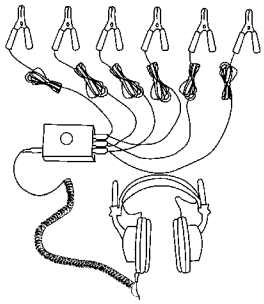 SBT839	Locating the noise
— (J-43980) NISSAN Squeak and Rattle kit	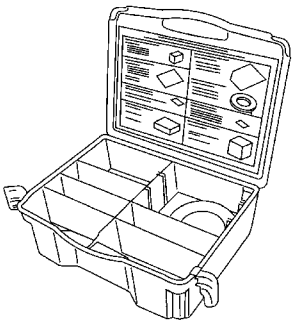 SBT840	Repairing the cause of noise

Commercial Service Tool

INFOID:0000000001704213

Tool number (Kent-Moore No.) Tool name		Description
— (J-39565) Engine ear	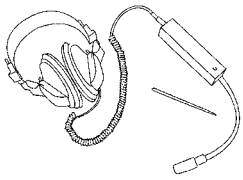 SIIA0995E	Locating the noise

SYMPTOM DIAGNOSIS

SQUEAK AND RATTLE TROUBLE DIAGNOSIS

Work Flow

INFOID:0000000001704214

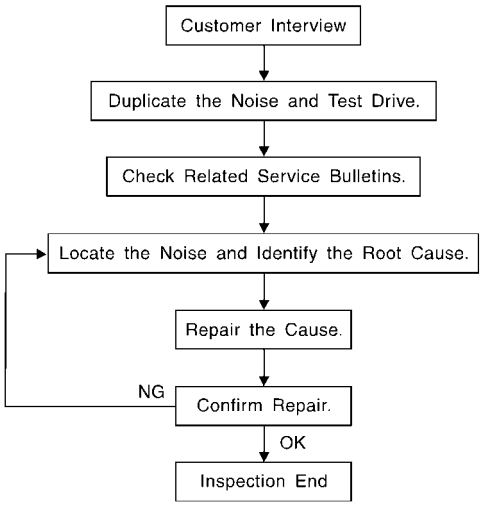

SBT842

CUSTOMER INTERVIEW

Interview the customer, if possible, to determine the conditions that exist when the noise occurs. Use the Diagnostic Worksheet during the interview to document the facts and conditions when the noise occurs and any customer's comments; refer to EI-9, "Diagnostic Worksheet". This information is necessary to duplicate the conditions that exist when the noise occurs.

- The customer may not be able to provide a detailed description or the location of the noise. Attempt to obtain all the facts and conditions that exist when the noise occurs (or does not occur).
- If there is more than one noise in the vehicle, be sure to diagnose and repair the noise that the customer is concerned about. This can be accomplished by test driving the vehicle with the customer.
- After identifying the type of noise, isolate the noise in terms of its characteristics. The noise characteristics are provided so the customer, service adviser and technician are all speaking the same language when defining the noise.
  - Squeak — (Like tennis shoes on a clean floor)
    Squeak characteristics include the light contact/fast movement/brought on by road conditions/hard surfaces = higher pitch noise/softer surfaces = lower pitch noises/edge to surface = chirping
  - Creak — (Like walking on an old wooden floor)
    Creak characteristics include firm contact/slow movement/twisting with a rotational movement/pitch dependent on materials/often brought on by activity.
  - Rattle — (Like shaking a baby rattle)
    Rattle characteristics include the fast repeated contact/vibration or similar movement/loose parts/missing clip or fastener/incorrect clearance.
  - Knock — (Like a knock on a door)
    Knock characteristics include hollow sounding/sometimes repeating/often brought on by driver action.
  - Tick — (Like a clock second hand)
    Tick characteristics include gentle contacting of light materials/loose components/can be caused by driver action or road conditions.
  - Thump — (Heavy, muffled knock noise)
    Thump characteristics include softer knock/dead sound often brought on by activity.
  - Buzz — (Like a bumblebee)
    Buzz characteristics include high frequency rattle/firm contact.
- Often the degree of acceptable noise level will vary depending upon the person. A noise that you may judge as acceptable may be very irritating to the customer.
- Weather conditions, especially humidity and temperature, may have a great effect on noise level.

DUPLICATE THE NOISE AND TEST DRIVE

If possible, drive the vehicle with the customer until the noise is duplicated. Note any additional information on the Diagnostic Worksheet regarding the conditions or location of the noise. This information can be used to duplicate the same conditions when you confirm the repair.
If the noise can be duplicated easily during the test drive, to help identify the source of the noise, try to duplicate the noise with the vehicle stopped by doing one or all of the following:
- Close a door.
- Tap or push/pull around the area where the noise appears to be coming from.
- Rev the engine.
- Use a floor jack to recreate vehicle “twist”.
- At idle, apply engine load (electrical load, half-clutch on M/T model, drive position on A/T model).
- Raise the vehicle on a hoist and hit a tire with a rubber hammer.
- Drive the vehicle and attempt to duplicate the conditions the customer states exist when the noise occurs.
- If it is difficult to duplicate the noise, drive the vehicle slowly on an undulating or rough road to stress the vehicle body.

CHECK RELATED SERVICE BULLETINS

After verifying the customer concern or symptom, check ASIST for Technical Service Bulletins (TSBs) related to that concern or symptom.
If a TSB relates to the symptom, follow the procedure to repair the noise.

LOCATE THE NOISE AND IDENTIFY THE ROOT CAUSE

1. Narrow down the noise to a general area. To help pinpoint the source of the noise, use a listening tool (Chassis Ear: J-39570, Engine Ear: J-39565 and mechanics stethoscope).
2. Narrow down the noise to a more specific area and identify the cause of the noise by:
   - Removing the components in the area that you suspect the noise is coming from.
     Do not use too much force when removing clips and fasteners, otherwise clips and fasteners can be broken or lost during the repair, resulting in the creation of new noise.
   - Tapping or pushing/pulling the component that you suspect is causing the noise.
     Do not tap or push/pull the component with excessive force, otherwise the noise will be eliminated only temporarily.
   - Feeling for a vibration with your hand by touching the component(s) that you suspect is (are) causing the noise.
   - Placing a piece of paper between components that you suspect are causing the noise.
   - Looking for loose components and contact marks.

   Refer to EI-7, "Generic Squeak and Rattle Troubleshooting".

REPAIR THE CAUSE

- If the cause is a loose component, tighten the component securely.
- If the cause is insufficient clearance between components:
- Separate components by repositioning or loosening and retightening the component, if possible.
- Insulate components with a suitable insulator such as urethane pads, foam blocks, felt cloth tape or urethane tape. A NISSAN Squeak and Rattle Kit (J-43980) is available through your authorized NISSAN Parts Department.

  CAUTION:
  Do not use excessive force as many components are constructed of plastic and may be damaged.
  Always check with the Parts Department for the latest parts information.

The following materials are contained in the NISSAN Squeak and Rattle Kit (J-43980). Each item can be ordered separately as needed.
URETHANE PADS [1.5 mm (0.059 in) thick]
Insulates connectors, harness, etc.
76268-9E005: 100 x 135 mm (3.94 x 5.31 in)/76884-71L01: 60 x 85 mm (2.36 x 3.35 in)/76884-71L02: 15 x 25 mm (0.59 x 0.98 in)
INSULATOR (Foam blocks)
Insulates components from contact. Can be used to fill space behind a panel.
73982-9E000: 45 mm (1.77 in) thick, 50 x 50 mm (1.97 x 1.97 in)/73982-50Y00: 10 mm (0.39 in) thick, 50 x 50 mm (1.97 x 1.97 in)
INSULATOR (Light foam block)
80845-71L00: 30 mm (1.18 in) thick, 30 x 50 mm (1.18 x 1.97 in)
FELT CLOTH TAPE
Used to insulate where movement does not occur. Ideal for instrument panel applications.
68370-4B000: 15 x 25 mm (0.59 x 0.98 in) pad/68239-13E00: 5 mm (0.20 in) wide tape roll

The following materials, not found in the kit, can also be used to repair squeaks and rattles.
UHMW (TEFLON) TAPE
Insulates where slight movement is present. Ideal for instrument panel applications.
SILICONE GREASE
Used in place of UHMW tape that will be visible or not fit.
Note: Will only last a few months.
SILICONE SPRAY
Use when grease cannot be applied.
DUCT TAPE
Use to eliminate movement.

CONFIRM THE REPAIR

Confirm that the cause of a noise is repaired by test driving the vehicle. Operate the vehicle under the same conditions as when the noise originally occurred. Refer to the notes on the Diagnostic Worksheet.

Generic Squeak and Rattle Troubleshooting

INFOID:0000000001704215

Refer to Table of Contents for specific component removal and installation information.

INSTRUMENT PANEL

Most incidents are caused by contact and movement between:

1. The cluster lid A and instrument panel
2. Acrylic lens and combination meter housing
3. Instrument panel to front pillar garnish
4. Instrument panel to windshield
5. Instrument panel pins
6. Wiring harnesses behind the combination meter
7. A/C defroster duct and duct joint

These incidents can usually be located by tapping or moving the components to duplicate the noise or by pressing on the components while driving to stop the noise. Most of these incidents can be repaired by applying felt cloth tape or silicone spray (in hard to reach areas). Urethane pads can be used to insulate wiring harness.

CAUTION:
Do not use silicone spray to isolate a squeak or rattle. If you saturate the area with silicone, you will not be able to recheck the repair.

CENTER CONSOLE

Components to pay attention to include:

1. Shifter assembly cover to finisher
2. A/C control unit and cluster lid C
3. Wiring harnesses behind audio and A/C control unit

The instrument panel repair and isolation procedures also apply to the center console.

DOORS

Pay attention to the:

1. Finisher and inner panel making a slapping noise
2. Inside handle escutcheon to door finisher
3. Wiring harnesses tapping
4. Door striker out of alignment causing a popping noise on starts and stops

Tapping or moving the components or pressing on them while driving to duplicate the conditions can isolate many of these incidents. You can usually insulate the areas with felt cloth tape or insulator foam blocks from the NISSAN Squeak and Rattle Kit (J-43980) to repair the noise.

TRUNK

Trunk noises are often caused by a loose jack or loose items put into the trunk by the owner.
In addition look for:

1. Trunk lid bumpers out of adjustment
2. Trunk lid striker out of adjustment

3. The trunk lid torsion bars knocking together
4. A loose license plate or bracket

Most of these incidents can be repaired by adjusting, securing or insulating the item(s) or component(s) causing the noise.

SUNROOF/HEADLINING

Noises in the sunroof/headlining area can often be traced to one of the following:

1. Sunroof lid, rail, linkage or seals making a rattle or light knocking noise
2. Sun visor shaft shaking in the holder
3. Front or rear windshield touching headliner and squeaking

Again, pressing on the components to stop the noise while duplicating the conditions can isolate most of these incidents. Repairs usually consist of insulating with felt cloth tape.

OVERHEAD CONSOLE (FRONT AND REAR)

Overhead console noises are often caused by the console panel clips not being engaged correctly. Most of these incidents are repaired by pushing up on the console at the clip locations until the clips engage.
In addition look for:

1. Loose harness or harness connectors.
2. Front console map/reading lamp lens loose.
3. Loose screws at console attachment points.

SEATS

When isolating seat noise it's important to note the position the seat is in and the load placed on the seat when the noise is present. These conditions should be duplicated when verifying and isolating the cause of the noise.
Cause of seat noise include:

1. Headrest rods and holder
2. A squeak between the seat pad cushion and frame
3. The rear seatback lock and bracket

These noises can be isolated by moving or pressing on the suspected components while duplicating the conditions under which the noise occurs. Most of these incidents can be repaired by repositioning the component or applying urethane tape to the contact area.

UNDERHOOD

Some interior noise may be caused by components under the hood or on the engine wall. The noise is then transmitted into the passenger compartment.
Causes of transmitted underhood noise include:

1. Any component installed on the engine wall
2. Components that pass through the engine wall
3. Engine wall mounts and connectors
4. Loose radiator pins
5. Hood bumpers out of adjustment
6. Hood striker out of adjustment

These noises can be difficult to isolate since they cannot be reached from the interior of the vehicle. The best method is to secure, move or insulate one component at a time and test drive the vehicle. Also, engine RPM or load can be changed to isolate the noise. Repairs can usually be made by moving, adjusting, securing, or insulating the component causing the noise.

Diagnostic Worksheet

INFOID:0000000001704216

Dear Customer:
We are concerned about your satisfaction with your vehicle. Repairing a squeak or rattle sometimes can be very difficult. To help us fix your vehicle right the first time, please take a moment to note the area of the vehicle where the squeak or rattle occurs and under what conditions. You may be asked to take a test drive with a service advisor or technician to ensure we confirm the noise you are hearing.

SQUEAK & RATTLE DIAGNOSTIC WORKSHEET

I. WHERE DOES THE NOISE COME FROM? (circle the area of the vehicle)
The illustrations are for reference only, and may not reflect the actual configuration of your vehicle.

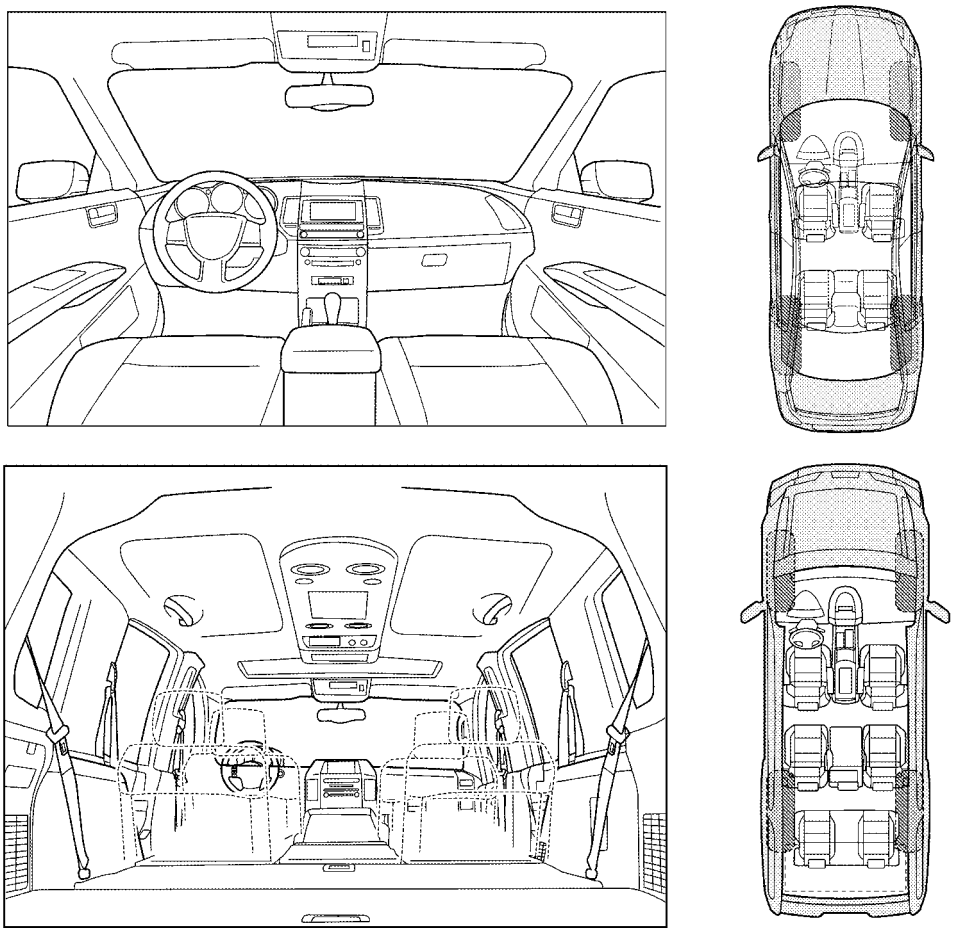

Continue to page 2 of the worksheet and briefly describe the location of the noise or rattle. In addition, please indicate the conditions which are present when the noise occurs.

-1-

LAIA0072E

SQUEAK & RATTLE DIAGNOSTIC WORKSHEET - page 2

Briefly describe the location where the noise occurs:

_____

_____

II. WHEN DOES IT OCCUR? (please check the boxes that apply)

- ☐ Anytime
- ☐ 1st time in the morning
- ☐ Only when it is cold outside
- ☐ Only when it is hot outside
- ☐ After sitting out in the rain
- ☐ When it is raining or wet
- ☐ Dry or dusty conditions
- ☐ Other:

III. WHEN DRIVING:

- ☐ Through driveways
- ☐ Over rough roads
- ☐ Over speed bumps
- ☐ Only about ____ mph
- ☐ On acceleration
- ☐ Coming to a stop
- ☐ On turns: left, right or either (circle)
- ☐ With passengers or cargo
- ☐ Other: _____
- ☐ After driving _____ miles or _____ minutes

IV. WHAT TYPE OF NOISE

- ☐ Squeak (like tennis shoes on a clean floor)
- ☐ Creak (like walking on an old wooden floor)
- ☐ Rattle (like shaking a baby rattle)
- ☐ Knock (like a knock at the door)
- ☐ Tick (like a clock second hand)
- ☐ Thump (heavy muffled knock noise)
- ☐ Buzz (like a bumble bee)

TO BE COMPLETED BY DEALERSHIP PERSONNEL

Test Drive Notes:

_____

_____

_____

	YES	NO	Initials of person performing
Vehicle test driven with customer	☐	☐	_____
- Noise verified on test drive	☐	☐	_____
- Noise source located and repaired	☐	☐	_____
- Follow up test drive performed to confirm repair	☐	☐	_____

VIN: _____ Customer Name _____

W.O.# _____ Date: _____

This form must be attached to Work Order

LAIA0071E

CLIP AND FASTENER

Description

INFOID:0000000001704217

- Clips and fasteners in EI section correspond to the following numbers and symbols.
- Replace any clips and/or fasteners which are damaged during removal or installation.

Symbol No.	Shapes	Removal & Installation
C101	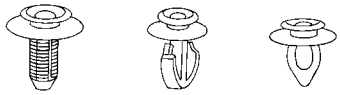 SBF302H	**Removal:** Remove by bending up with flat-bladed screwdrivers or clip remover. SBF367BA
C103	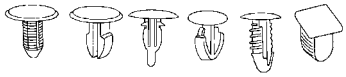 SBT095	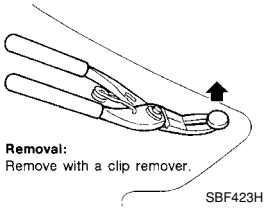 **Removal:** Remove with a clip remover. SBF423H
C203	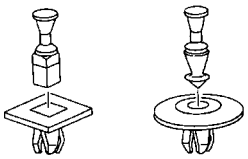 SBF258G	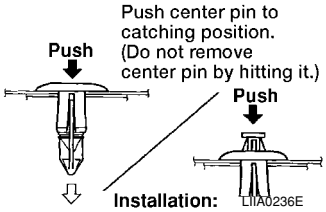 LIIA0236E
C205	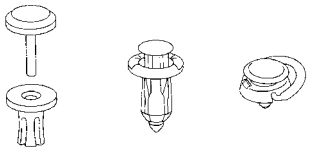 MBT080A	**Removal:** 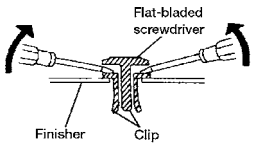 SBF638CA
C206	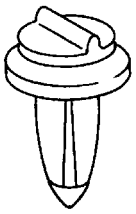 MBF519B	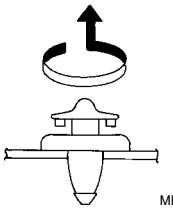 MBF520B
CE103	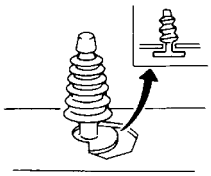 SBF104B	**Removal:** 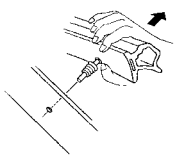 SBF147B

Symbol No.	Shapes	Removal & Installation
CE107	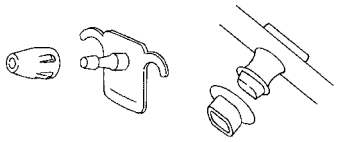 SBF411H	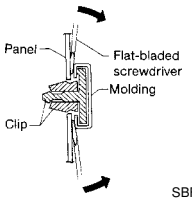 SBF767B
CE117	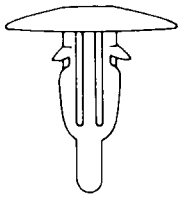 SBF174D	**Removal:** Remove by bending up with a flat-bladed screwdriver or pliers. 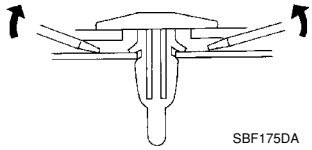 SBF175DA
CF110	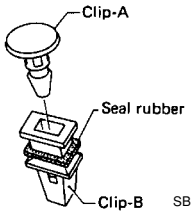 SBF648B	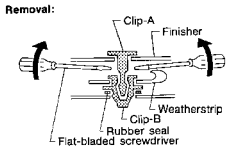 SBF649B
CF118	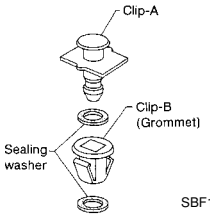 SBF151D	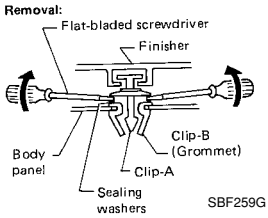 SBF259G
CG101	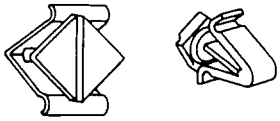 SBF145B	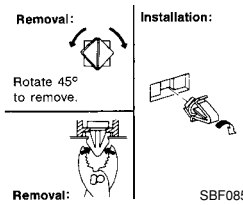 SBF085B
CS101	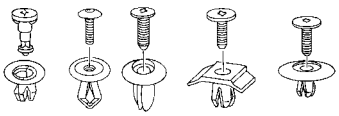 SBF078B	**Removal:** 1. Screw out with a Phillips screwdriver. 2. Remove female portion with flat-bladed screwdriver. SBF992G

Symbol No.	Shapes	Removal & Installation
CR103	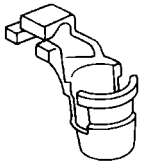 SBF768B	**Removal:** Holder portion of clip must be spread out to remove rod. 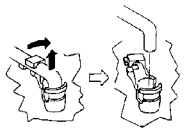 SBF770B
Metal Clip	WBT072	**Removal:** 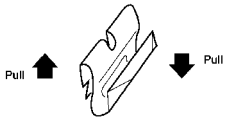 WBT073

ON-VEHICLE REPAIR

FRONT BUMPER

Removal and Installation

INFOID:0000000001704218

SEC.620

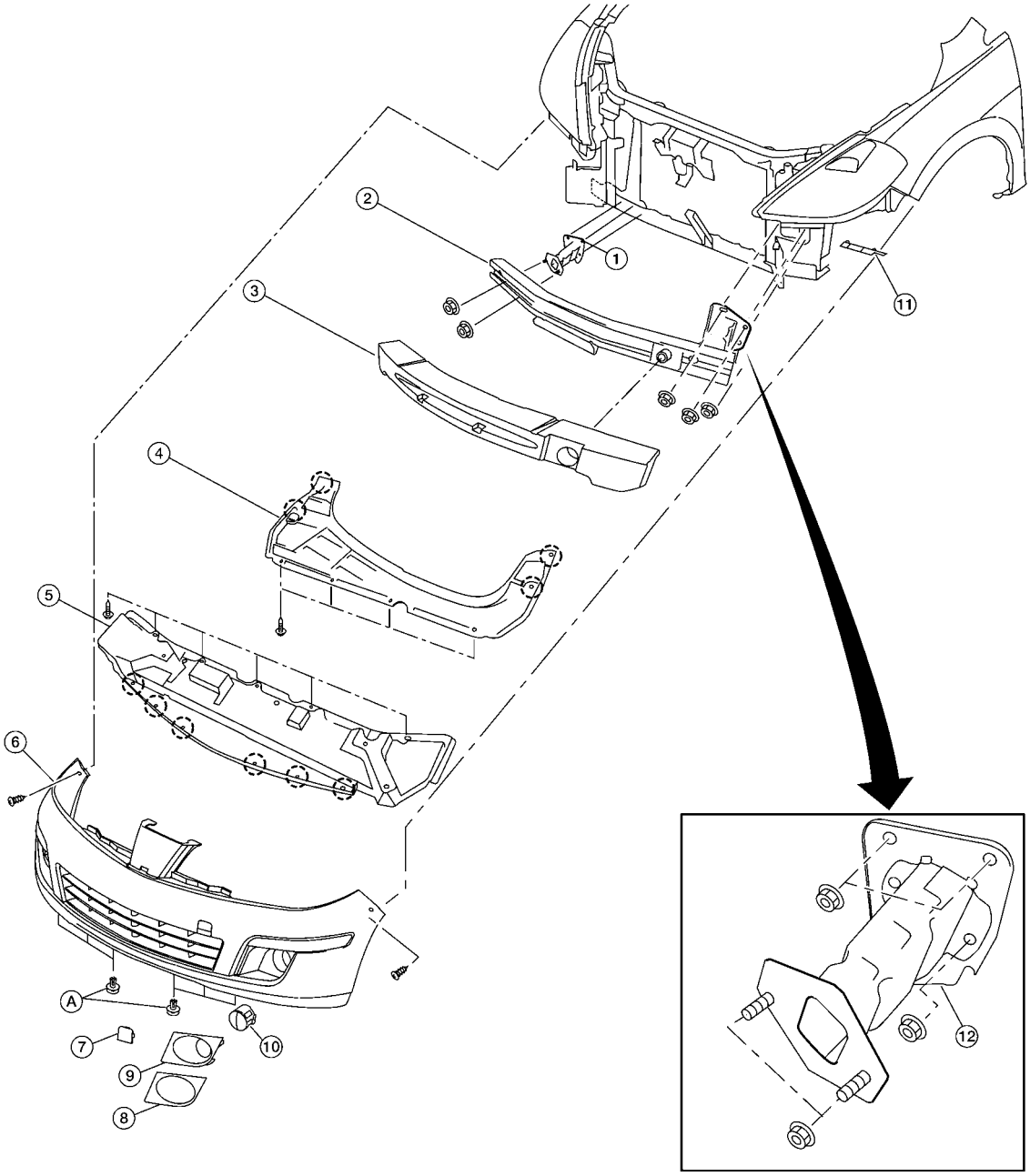

WIIA1405E

1. Bumper stay RH
2. Bumper reinforcement (production)
3. Bumper energy absorber
4. Engine undercover
5. Front valance
6. Front bumper fascia
7. Access cover
8. Fog lamp opening finisher (without fog lamps)
9. Fog lamp opening finisher (with fog lamps)

10. Fog lamp assembly
11. Bumper side retainer
12. Bumper stay LH (service)

A. Clip C205

CAUTION:
Bumper fascia is made of resin. Do not apply strong force to it, and be careful to prevent contact with oil.

REMOVAL

1. Open hood.
2. Remove front grille. Refer to EI-20.
3. Remove front fender protectors RH/LH. Refer to EI-23.
4. Remove front valance and engine undercover.
5. Remove screws of front bumper fascia RH/LH.
6. Pull the outboard edge of front bumper fascia away from vehicle to disengage from the bumper side retainer.

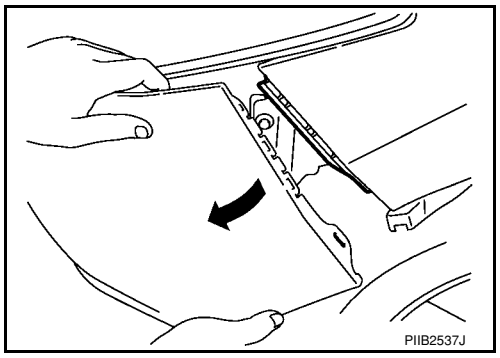

7. Disconnect fog lamp harness connector RH/LH (if equipped).
8. Remove the front bumper fascia.

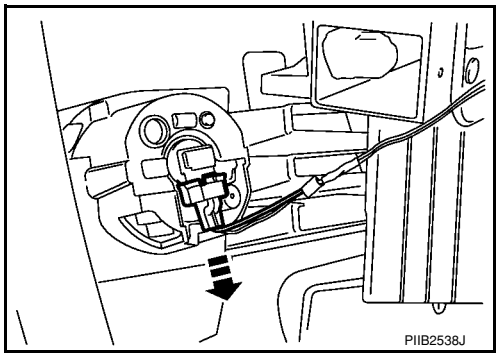

9. Remove fog lamp opening finisher and fog lamp assembly RH/LH (if equipped). Refer to LT-47, "Removal and Installation".
10. Remove bumper energy absorber.

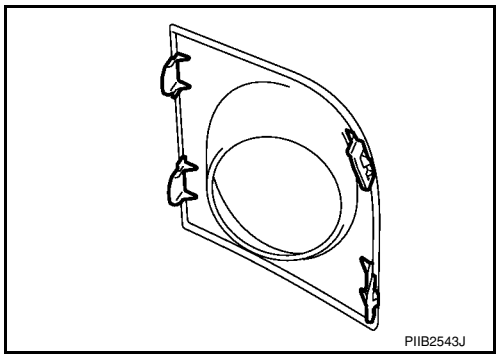

11. Remove RH/LH air guide mounting clips of bumper reinforcement.
12. Remove the nuts, then remove bumper reinforcement and bumper stay(s):
    - For production, bumper stay LH is part of bumper reinforcement.
    - For service, bumper stay RH/LH are separate assemblies.
13. Remove bumper side bracket RH/LH after front bumper fascia removal.

INSTALLATION

Installation is in the reverse order of removal.

REAR BUMPER

Component

INFOID:0000000001704219

Hatchback Models

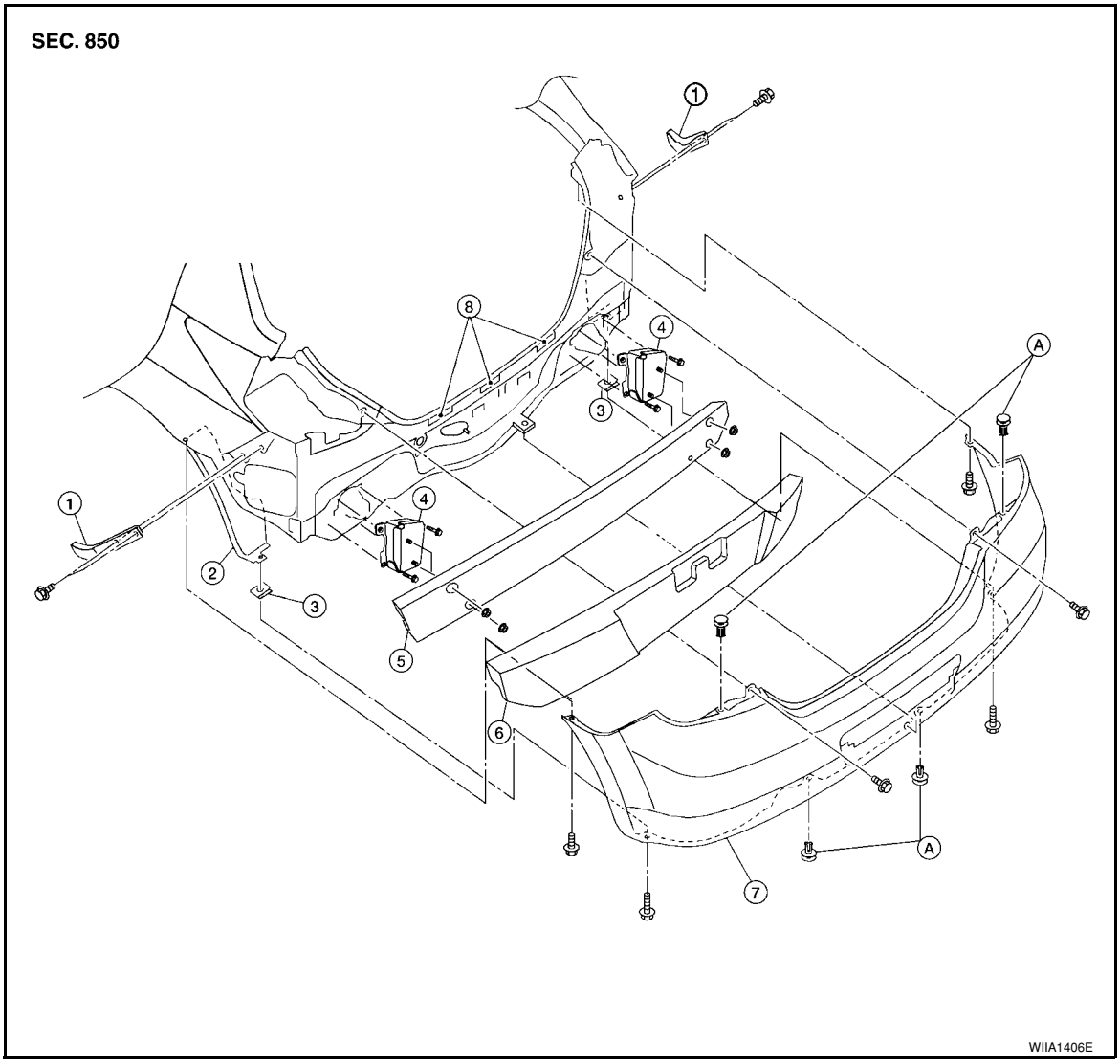

1.	Bumper side bracket	2.	Rear fender protector	3.	Spring nut
4.	Bumper reinforcement bracket	5.	Rear bumper reinforcement	6.	Energy absorbing foam
7.	Rear bumper fascia	8.	Rear bumper upper retainer	A.	Clip C205

Sedan Models

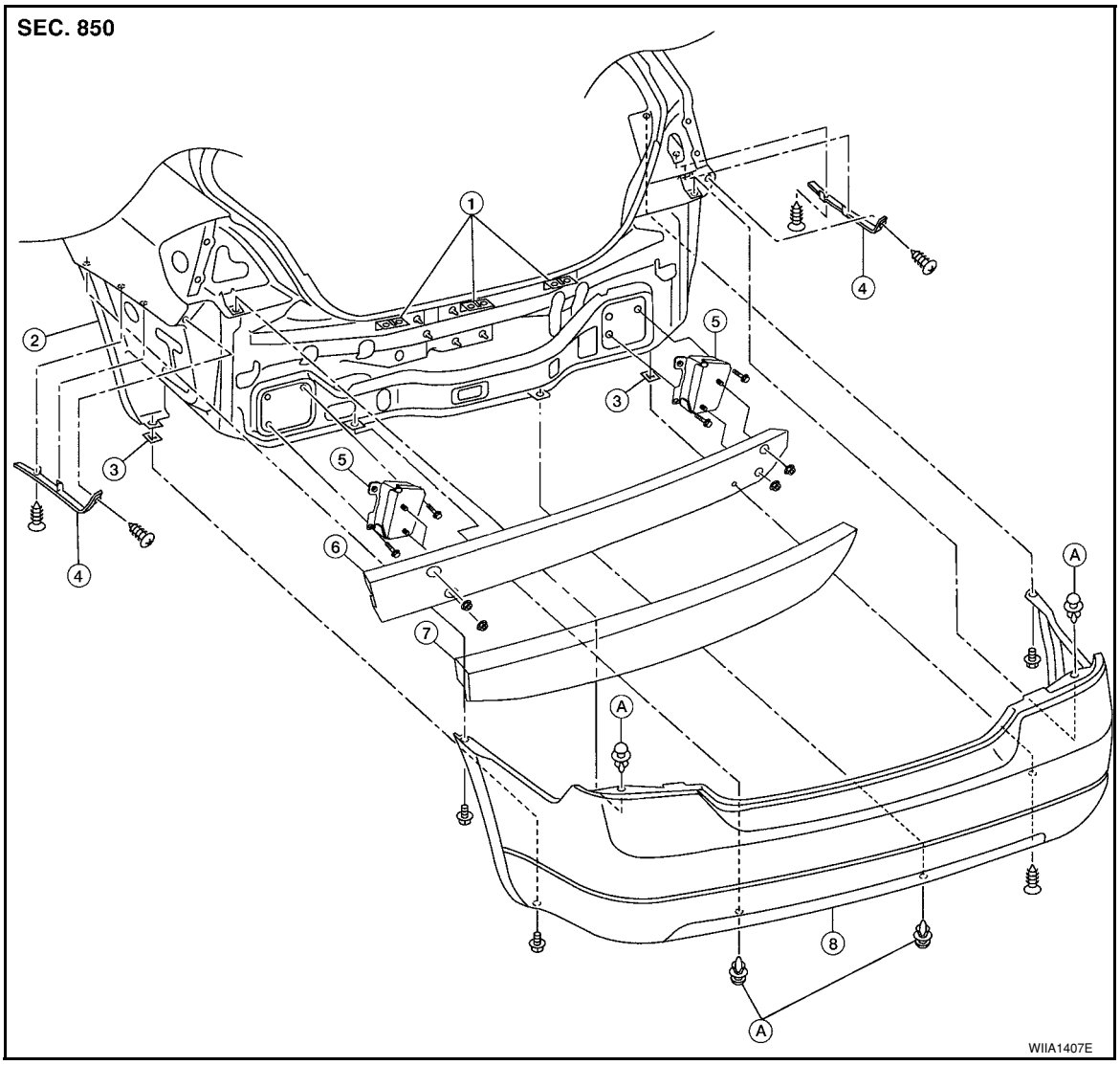

1.	Rear bumper upper retainer	2.	Rear fender protector	3.	Spring nut
4.	Bumper side bracket	5.	Bumper reinforcement bracket	6.	Rear bumper reinforcement
7.	Energy absorbing foam	8.	Rear bumper fascia	A.	Clip C205

Removal and Installation - Hatchback

INFOID:0000000001704220

REMOVAL

1. Open back door.
2. Remove rear combination lamp RH/LH. Refer to LT-86, "Removal and Installation".
3. Remove rear bumper fascia spring nuts and screws RH/LH.
4. Remove rear fender protector. Refer to EI-23, "Removal and Installation".

5. Pull the rear bumper fascia side outward and release the bumper side bracket.

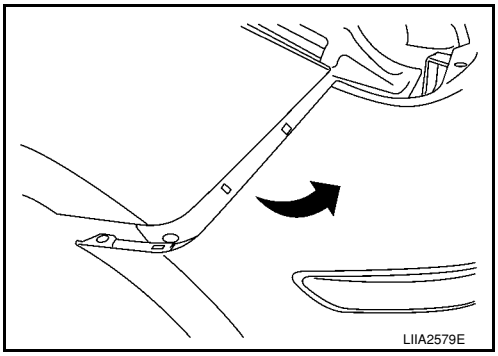

6. Remove rear bumper fascia upper clips and screws.
7. Release rear bumper upper retainer (1), then pull rear bumper fascia outward away from rear of vehicle.

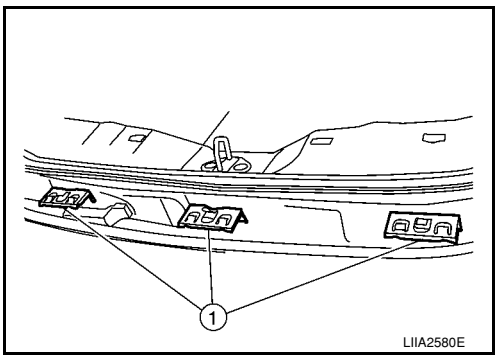

8. Disconnect license lamp connector.
9. Remove energy absorbing foam and rear bumper reinforcement.
10. Remove the bumper side bracket (1) RH/LH.

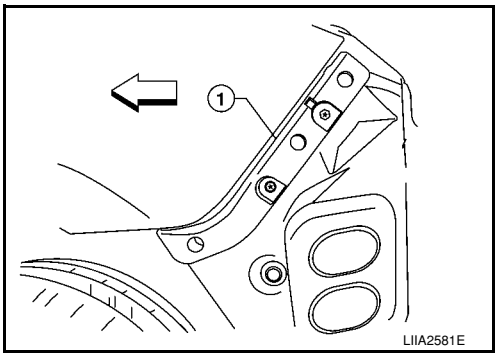

INSTALLATION

Installation is in the reverse order of removal.

Removal and Installation - Sedan

INFOID:0000000001704221

REMOVAL

1. Open trunk lid.
2. Remove rear combination lamp RH/LH. Refer to LT-86, "Removal and Installation".
3. Remove rear bumper fascia spring nuts and screws RH/LH.
4. Remove rear fender protector. Refer to EI-23, "Removal and Installation".
5. Pull the rear bumper fascia side outward and release the bumper side bracket.
6. Remove rear bumper fascia upper clips and screws.

7. Release rear bumper upper retainer (1), then pull rear bumper fascia outward away from rear of vehicle.

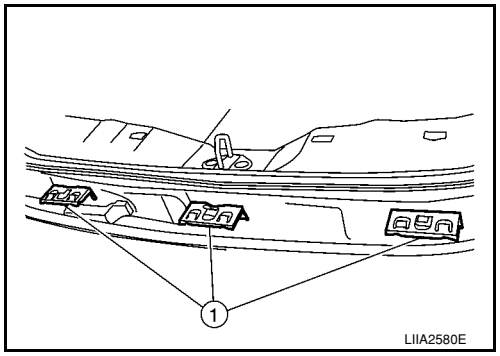

8. Remove energy absorbing foam and rear bumper reinforcement.
9. Remove the bumper side bracket (1) RH/LH.

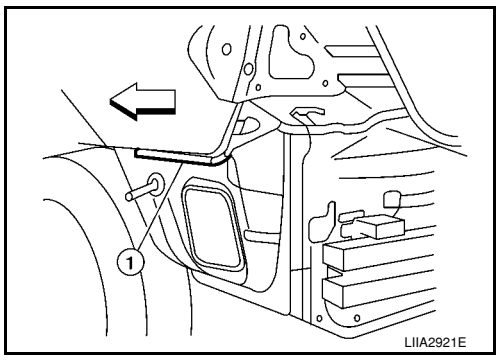

INSTALLATION

Installation is in the reverse order of removal.

FRONT GRILLE

Removal and Installation

INFOID:0000000001704222

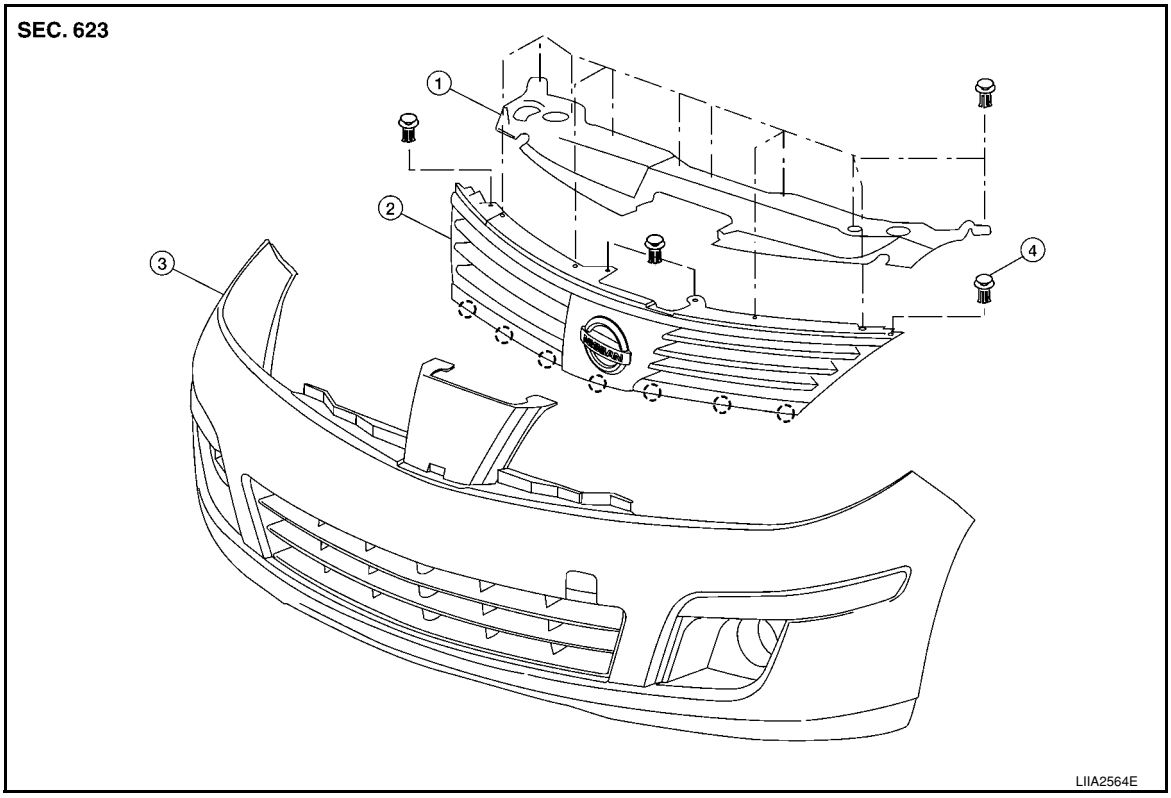

1. Upper radiator cover
2. Front grille
3. Front bumper fascia
4. Clip C205

◌ Pawl

REMOVAL

1. Open hood assembly.
2. Remove the clips, then remove upper radiator cover.
3. Remove the upper clips and release the lower pawls, then pull outward to remove the front grille.

INSTALLATION

Installation is in the reverse order of removal.

COWL TOP

Removal and Installation

INFOID:0000000001704223

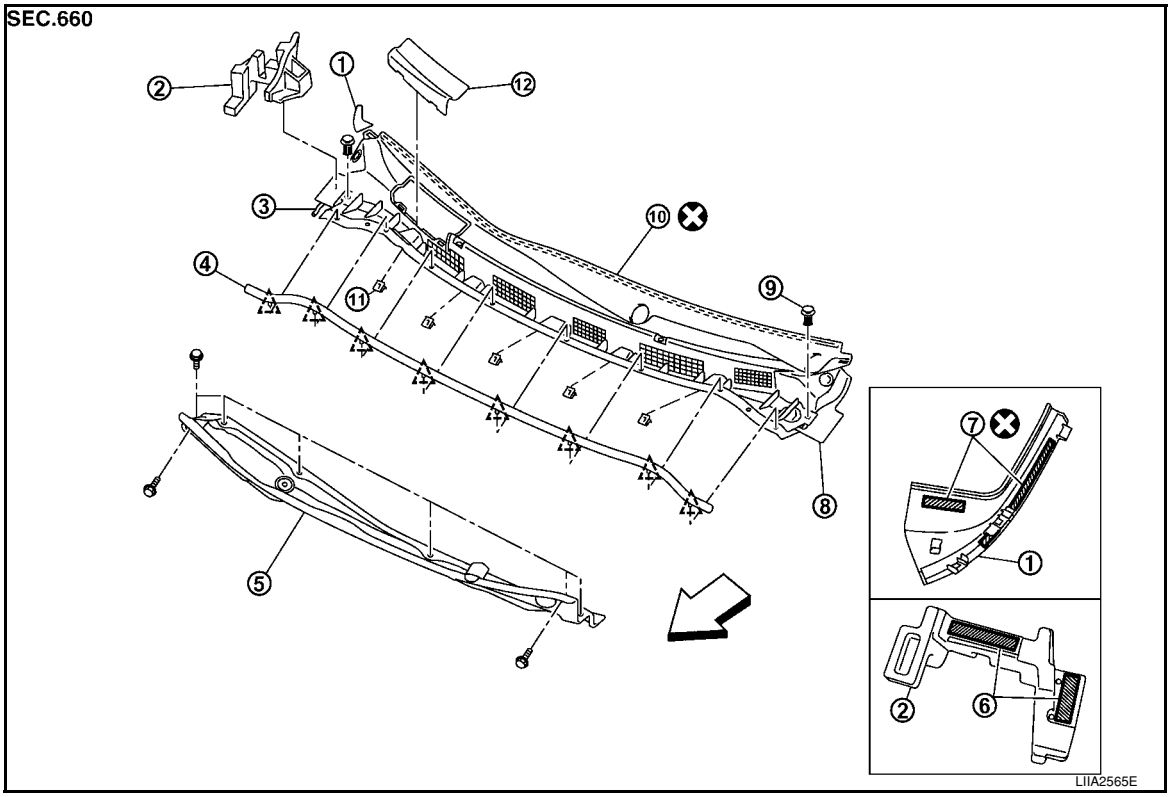

1.	Fender cover	2.	Fender seal	3.	Washer tube
4.	Cowl top seal	5.	Cowl extension panel	6.	Dual lock fastener
7.	Double-faced adhesive tape	8.	Cowl top cover	9.	Clip C205
10.	EPT sealer	11.	Cowl extension clip	12.	Cover
△	Clip CE103	⇐	Vehicle front		

REMOVAL

1. Remove front wiper arm RH/LH from vehicle. Refer to WW-18, "Removal and Installation of Front Wiper Arms".
2. Disconnect washer tube.

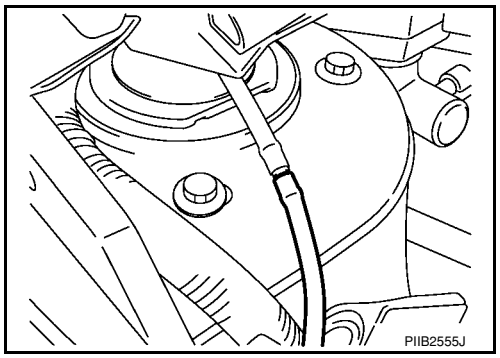

3. Remove fender seal and fender cover RH/LH.
4. Release the cowl top seal clips, then remove cowl top seal.

5. Release the cowl extension clip (1) by prying the center pawls apart and pulling clip outward. Remove remaining clips, then remove cowl top cover (2).

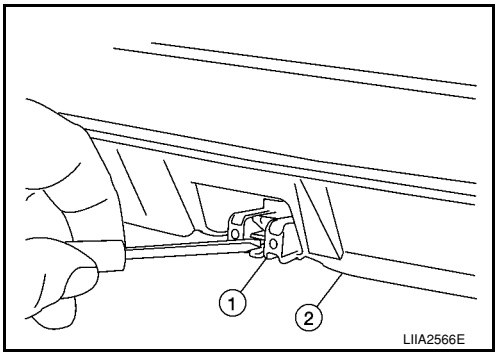

6. Disconnect and remove the front wiper motor and linkage assembly. Refer to WW-19, "Removal and Installation of Front Wiper Drive Assembly".
CAUTION:
To avoid damage, make sure to cover the lower edge of windshield with suitable protection material.

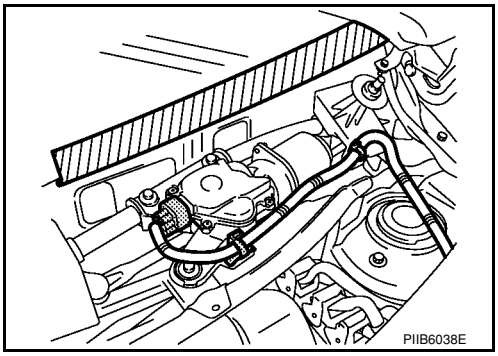

7. Remove cowl extension panel bolts, then remove cowl extension panel.

INSTALLATION

Installation is in the reverse order of removal.

NOTE:

- For wiper arm RH/LH installation and adjustment, Refer to WW-18, "Removal and Installation of Front Wiper Arms".
- Always replace EPT sealer and double-faced adhesive tape when installing cowl top cover.

FENDER PROTECTOR

Component

INFOID:0000000001704224

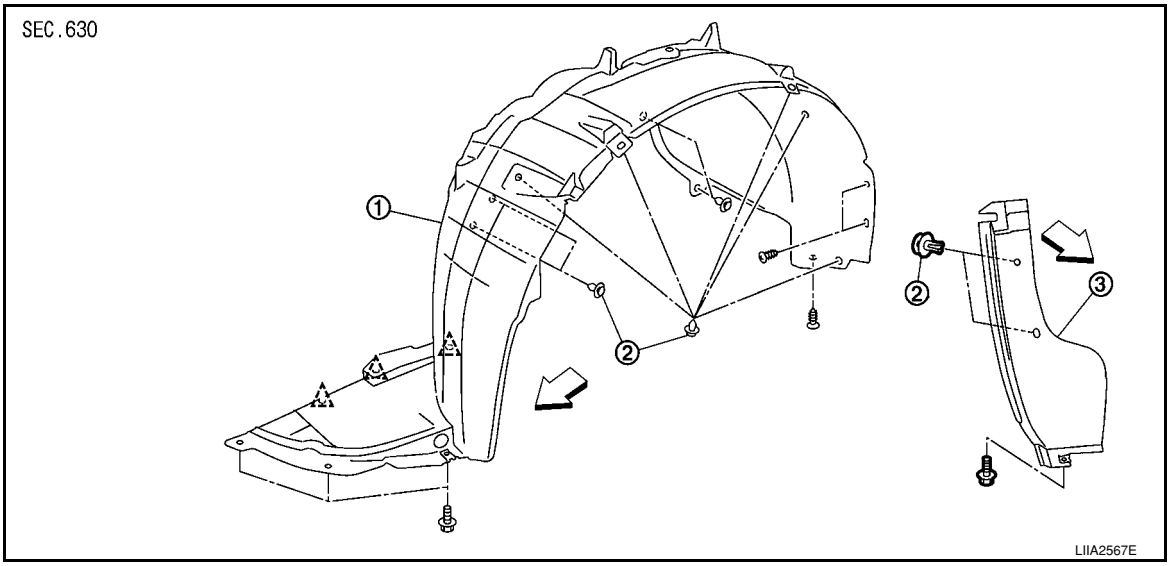

1. Front fender protector
2. Clip C205
3. Rear fender protector

△ Clip C103
⇐ Vehicle front

Removal and Installation

INFOID:0000000001704225

FRONT FENDER PROTECTOR

Removal

1. Remove front fender protector bolts and clips.
2. Remove front fender protector.

Installation

Installation is in the reverse order of removal.

REAR FENDER PROTECTOR

Removal

1. Remove rear fender protector bolt and clip.
2. Remove rear fender protector.

Installation

Installation is in the reverse order of removal.

ROOF SIDE MOLDING

Component

INFOID:0000000001704226

Hatchback Models

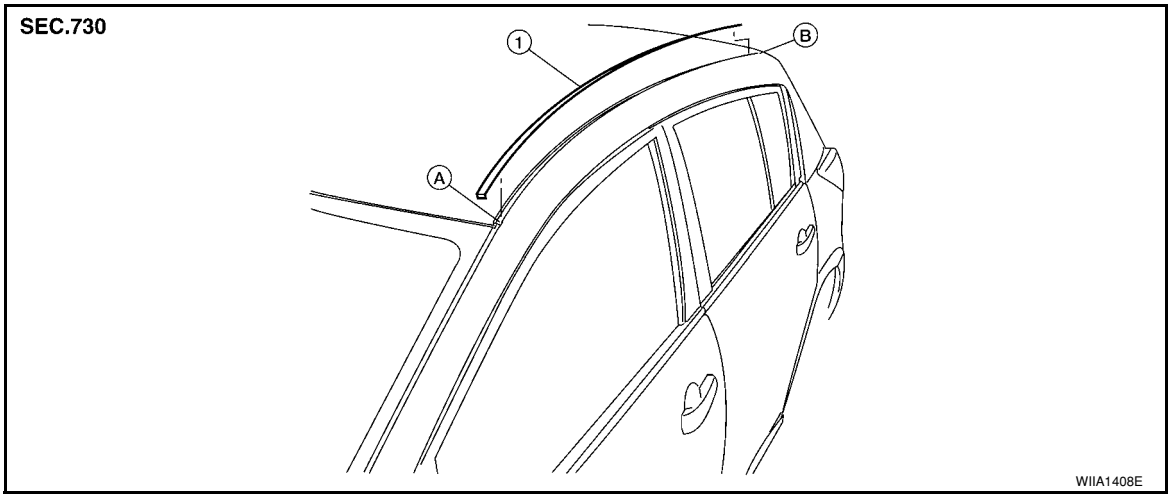

1. Roof side molding
A. Front roof side molding clip
B. Rear roof side molding clip

Sedan Models

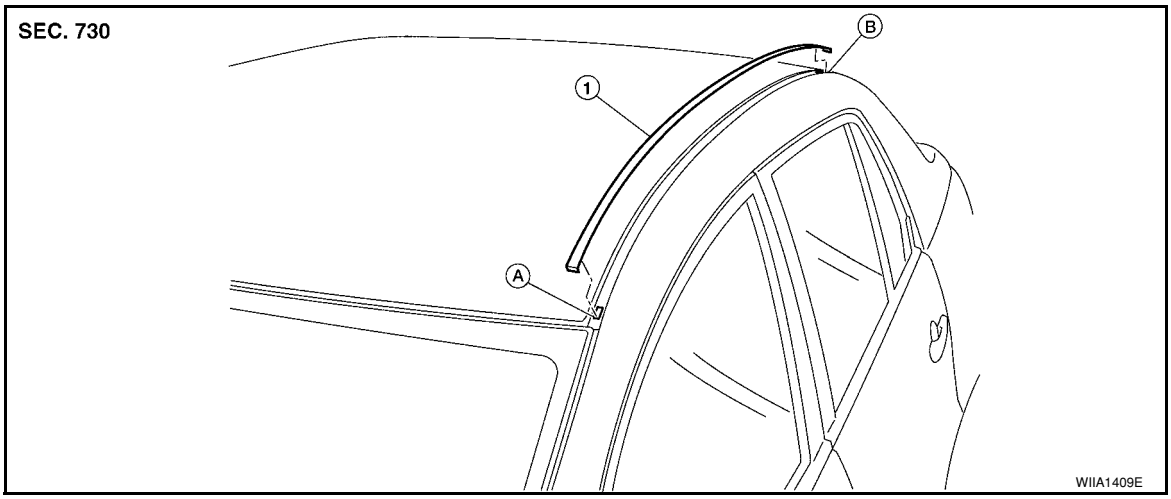

1. Roof side molding
A. Front roof side molding clip
B. Rear roof side molding clip

Removal and Installation

INFOID:0000000001704227

REMOVAL

1. Using a suitable tool, release the rear roof side molding clip and remove.
2. Lift up rear edge of roof side molding working forward.
3. Release front roof side molding clip, then remove roof side molding.

INSTALLATION

Installation is in the reverse order of removal.

NOTE:

Make sure front edge of roof side molding contacts windshield molding with no gap.

- For setting a new clip A or B, use Epoxy Adhesive DP-100C made by 3M. For adhesive DP-100C application use an applicator 9170 EPX W 1:1 and mixer nozzle 9742 EPX 50ML made by 3M.

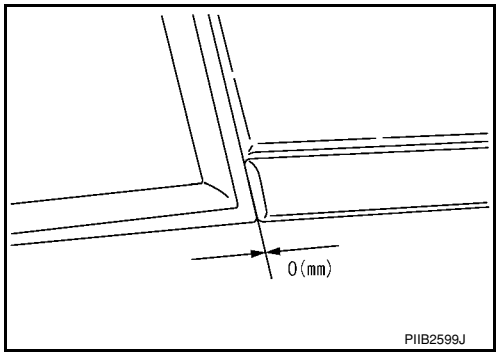

DOOR OUTSIDE MOLDING

Component

INFOID:0000000001704228

Hatchback Models

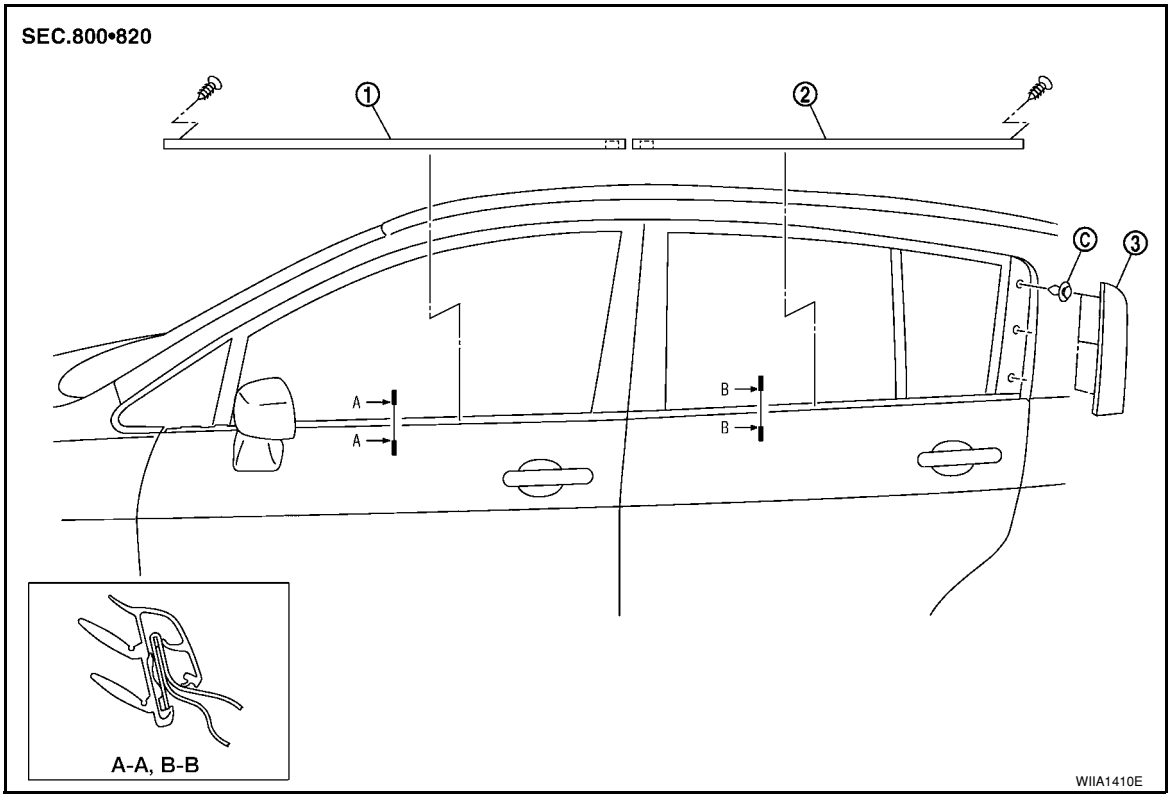

1. Front door outside molding
2. Rear door outside molding
3. Rear door corner cover

A. Clip C101

Sedan Models

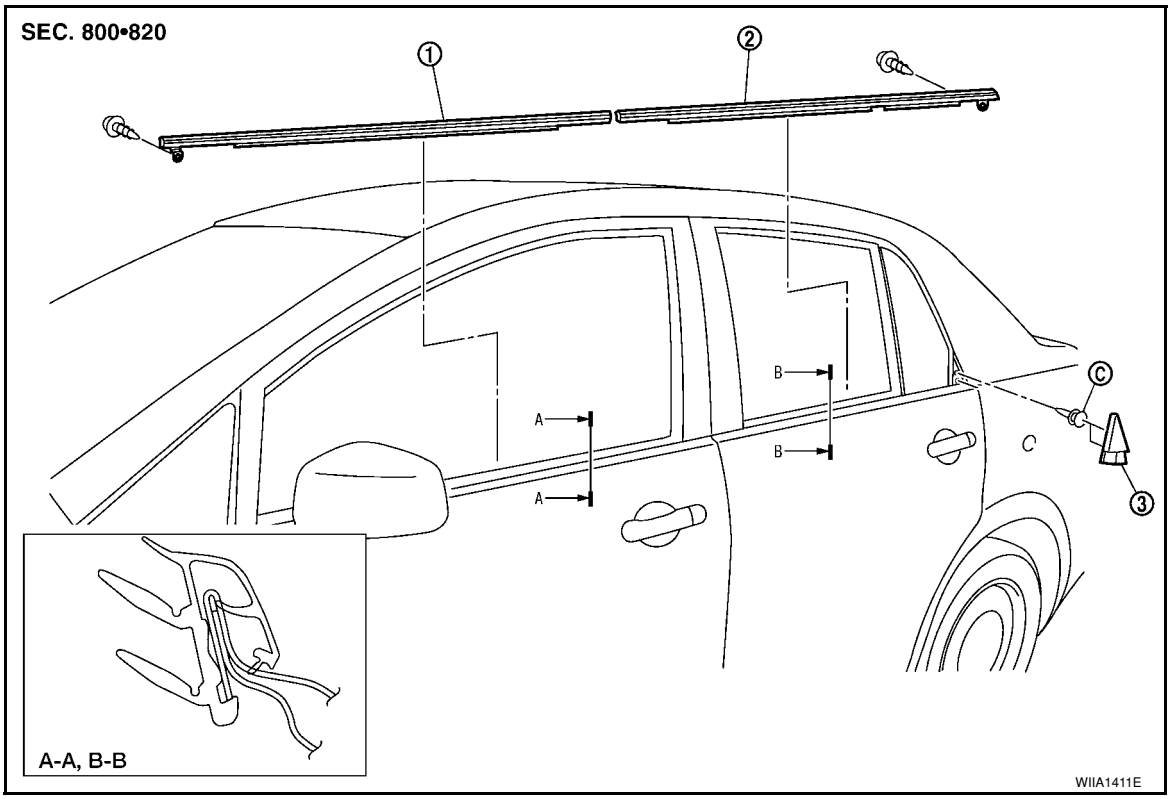

1. Front door outside molding
2. Rear door outside molding
3. Rear door corner cover

A. Clip C101

Removal and Installation

INFOID:0000000001704229

FRONT DOOR OUTSIDE MOLDING

Removal

1. Open front door window.
2. Remove front door outside molding screw.
3. While pulling up on front of front door outside molding, insert a suitable tool beneath the molding and release it from the door top edge.

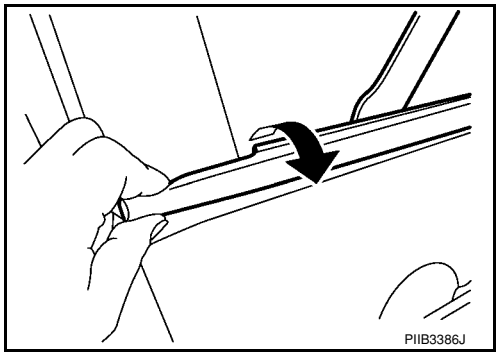

4. Twist the lower edge of the molding away from the door at the rear to gain access to the locking tab.
5. Insert a suitable tool behind the molding pressing the center of the tab inward to release.
6. Remove front door outside molding while pulling up after disengaging.

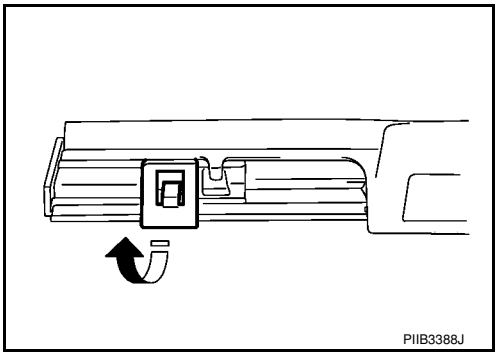

Installation
Installation is in the reverse order of removal.

CAUTION:
- **Use care while removing to avoid permanent damage to part from excessive force during removal.**
- **After removal, visually inspect molding; replace if deformed or damaged.**

REAR DOOR OUTSIDE MOLDING

Removal

1. Open rear door window.
2. Remove rear door outside molding screw.
3. While pulling up on rear of rear door outside molding, insert a suitable tool beneath the molding and release it from the door top edge.

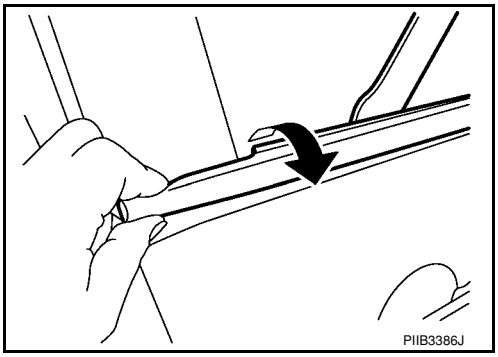

4. Twist the lower edge of the molding away from the door at the front to gain access to the locking tab.
5. Insert a suitable tool behind the molding pressing the center of the tab inward to release.
6. Remove rear door outside molding while pulling up after disengaging.

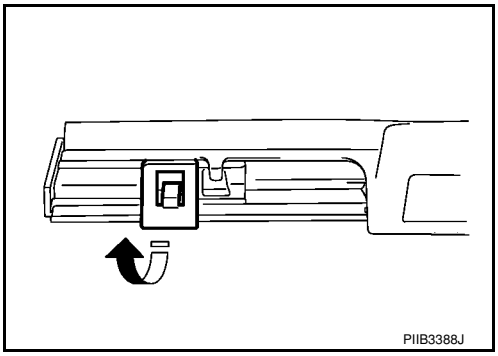

Installation
Installation is in the reverse order of removal.

CAUTION:
- **Use care while removing to avoid permanent damage to part from excessive force during removal.**
- **After removal, visually inspect molding; replace if deformed or damaged.**

REAR DOOR CORNER COVER

Removal
Using a suitable tool, release the clips while pulling outward and remove the rear door corner cover.

Installation
Installation is in the reverse order of removal.

CENTER MUD GUARD

Removal and Installation

INFOID:0000000001704230

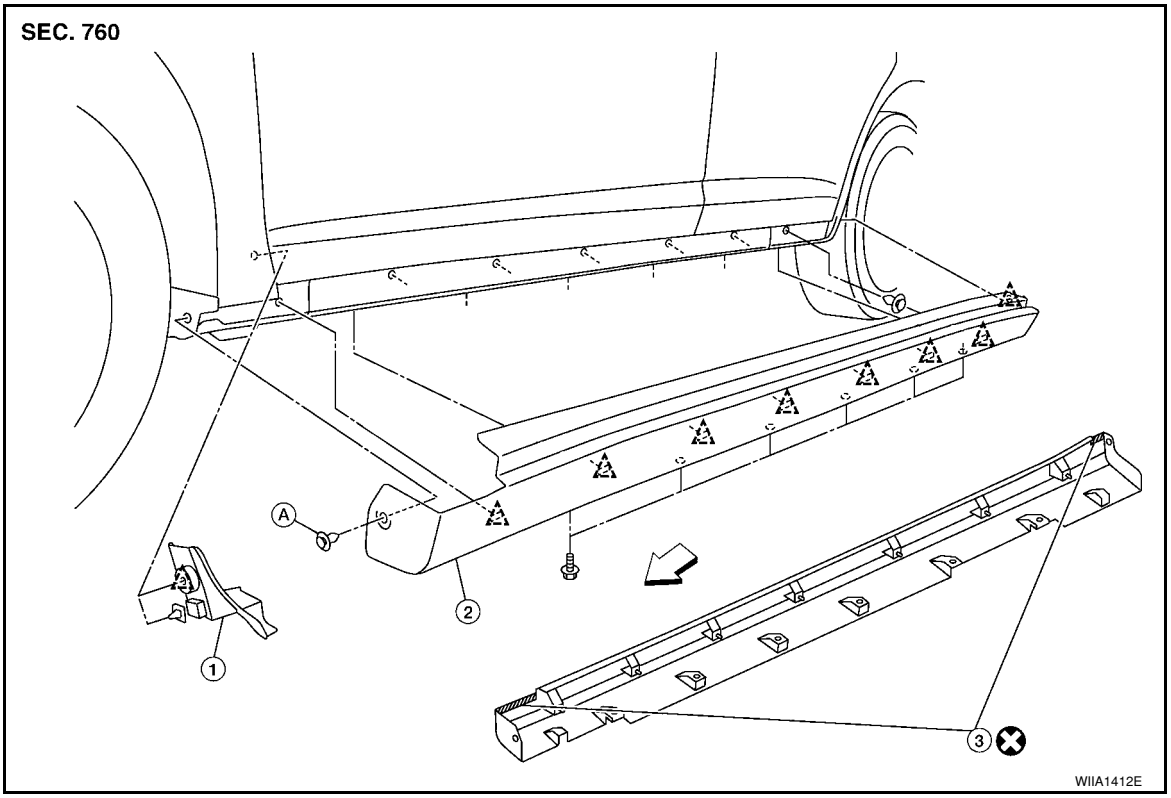

1. Sill cover cap	2. Center mud guard	3. Double-faced adhesive tape
A. Clip C205	△ Clip C101	⇐ Vehicle front

REMOVAL

1. Remove center mud guard screws, front and rear.
2. Remove center mud guard bolts at bottom edge and release double-faced adhesive tape from body side.
3. Open front and rear doors, then using a suitable tool, remove the clips and remove the center mud guard from the body side.
4. Release the sill cover cap clips, then remove sill cover cap.

INSTALLATION

Installation is in the reverse order of removal.

NOTE:

- Always replace double-faced adhesive tape on back of center mud guard when installing.
- Do not wash vehicle within 24 hours after installation.

TRUNK LID FINISHER

Removal and Installation

INFOID:0000000001704231

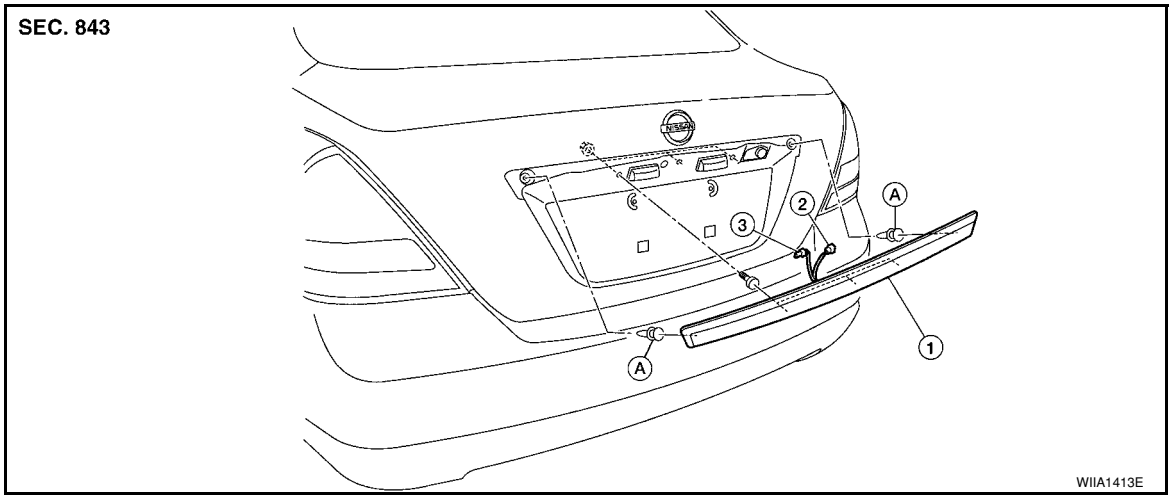

1. Trunk lid finisher outer
2. Trunk lid opener switch connector
3. Trunk opener request switch connector

A. Clip C101

REMOVAL

1. Disconnect the negative and positive battery cables.
2. Open trunk lid, remove trunk lid finisher inner. Refer to EI-53.
3. Remove trunk lid finisher outer nuts.
4. Release the clips, then pull trunk lid finisher outer away from trunk lid.
5. Disconnect trunk lid opener switch connector and trunk opener request switch connector, then remove trunk lid finisher outer.

INSTALLATION

Installation is in the reverse order of removal.

REAR AIR SPOILER

Removal and Installation

INFOID:0000000001704232

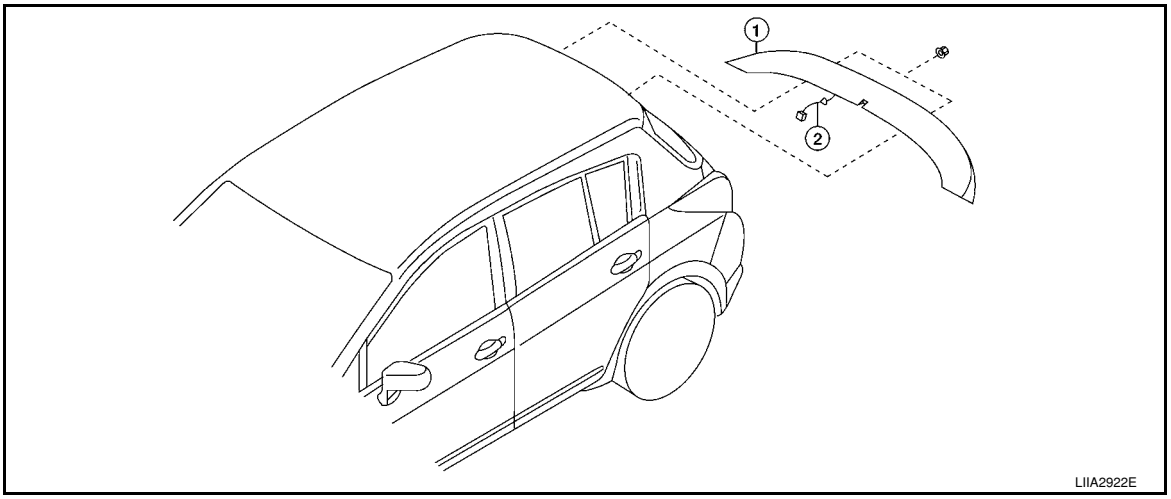

1. Rear air spoiler assembly
2. High mounted stop lamp harness

Removal

1. Disconnect the negative and positive battery cables.
2. Remove back door finisher upper. Refer to EI-36.
3. Disconnect high mounted stop lamp connector.
4. Remove the nuts and carefully lift the rear air spoiler from the back door.
   CAUTION:
   Use care not to damage painted surfaces during removal of, or releasing adhesive backed foam tapes if equipped.
5. Release the high mounted stop lamp harness grommet from back door, then remove rear air spoiler.

Installation

Installation is in the reverse order of removal.

NOTE:

- Before installing rear air spoiler, clean the surface where it will be mounted with isopropyl alcohol or equivalent to degrease the surface.
- Before installing, be sure there are no gaps or waves in the foam tape (if equipped) where the surfaces meet.
- During installation, be sure grommet of high mounted stop lamp harness is fully seated into back door opening prior to final rear air spoiler placement.

DOOR FINISHER

Removal and Installation

INFOID:0000000001704233

FRONT DOOR

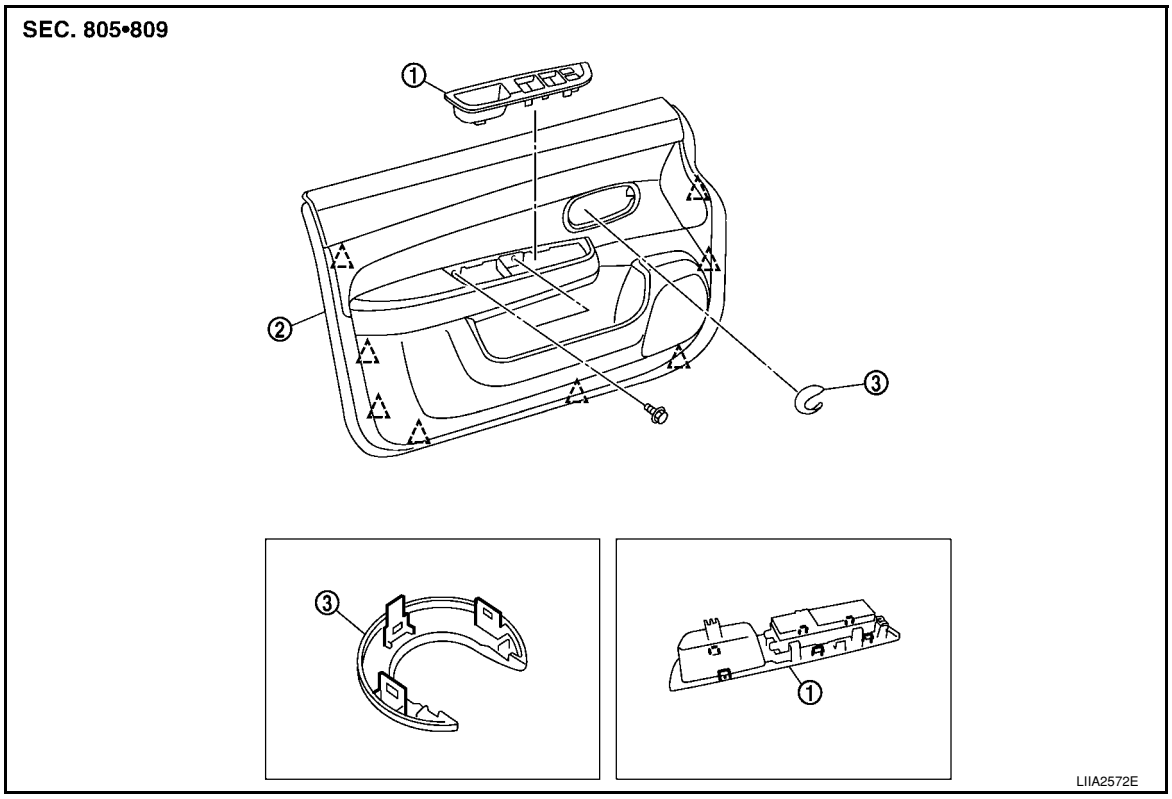

1. Power window and door lock/unlock switch finisher
2. Front door finisher
3. Inside handle escutcheon

△ Clip C101

Removal

1. Open front door and front door window.
2. Disconnect the negative and positive battery cables.
3. Release the front door inside handle escutcheon pawls, then slide the escutcheon rearward to remove from front door finisher.

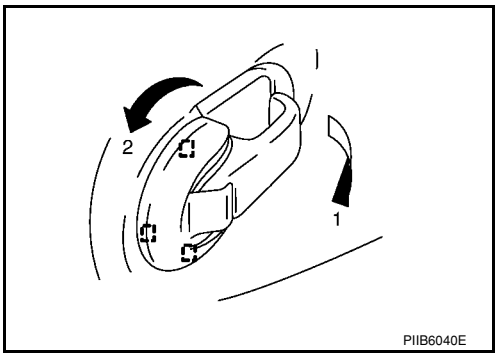

4. Insert a trim stick (A) or suitable tool into back edge of front door power window and door lock/unlock switch finisher. Lift upward to release the clips and remove.

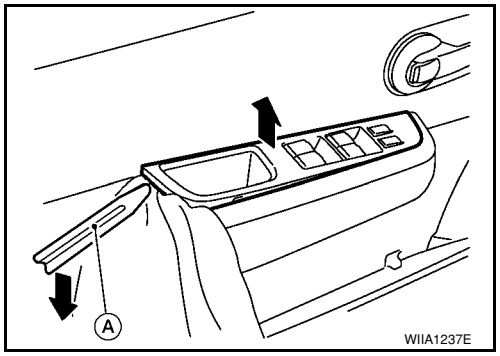

5. Disconnect front door power window and door lock/unlock switch harness connector.

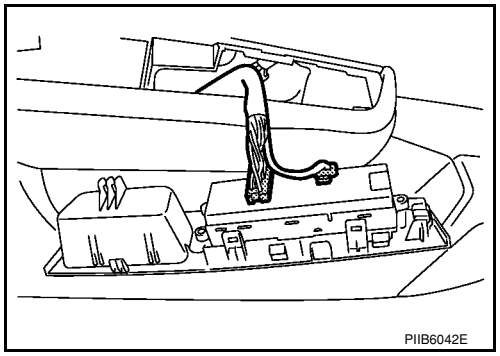

6. Remove the (2) front door finisher screws.
7. Release the clips, then lift front door finisher upward to remove it from door body panel.

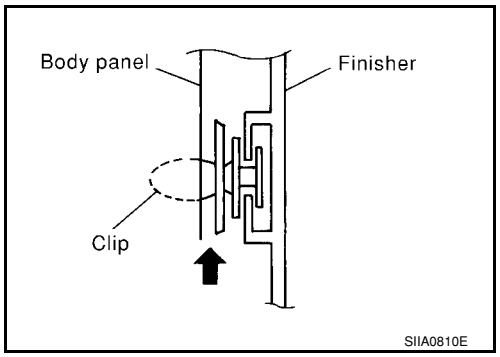

Installation

Installation is in the reverse order of removal.

REAR DOOR

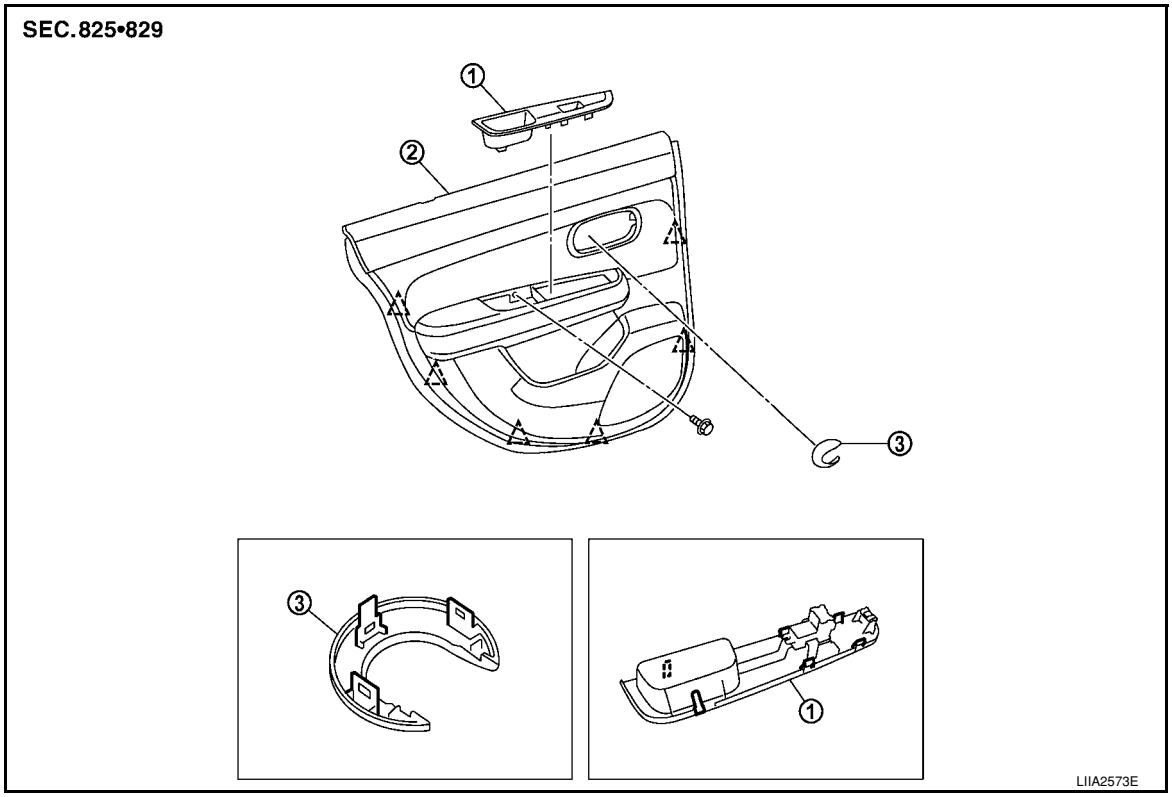

1. Rear power window switch finisher
2. Rear door finisher
3. Inside handle escutcheon

△ Clip C101

Removal

1. Open rear door and rear door window.
2. Disconnect the negative and positive battery cables.
3. Release the rear door inside handle escutcheon pawls, then slide the escutcheon rearward to remove from rear door finisher.

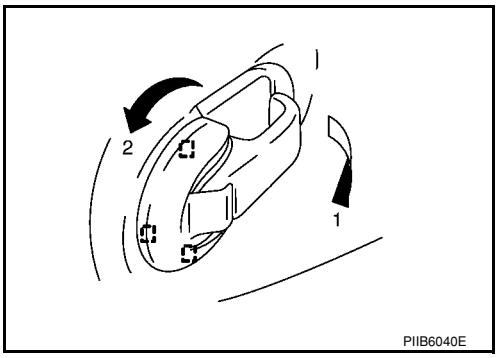

4. Insert a trim stick (A), or suitable tool into back edge of rear door power window switch finisher. Lift upward to release the clips and remove.

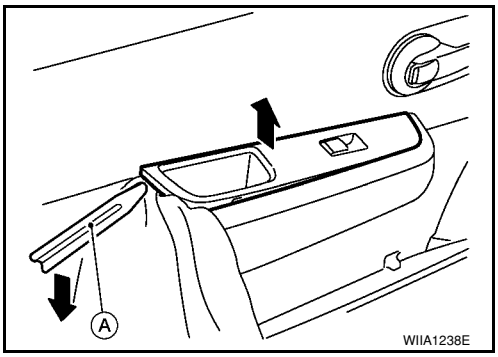

5. Disconnect rear door power window switch harness connector.
6. Remove rear door finisher screw.

7. Release the clips, then lift rear door finisher upward to remove it from door body panel.

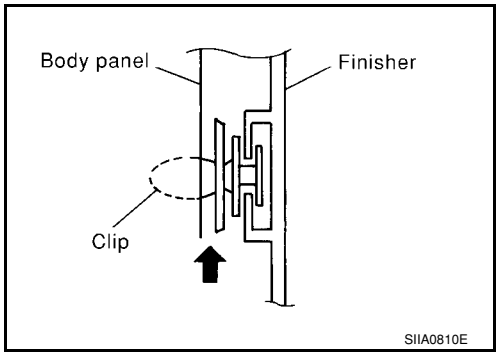

Installation

Installation is in the reverse order of removal.

BACK DOOR TRIM

Removal and Installation

INFOID:0000000001704234

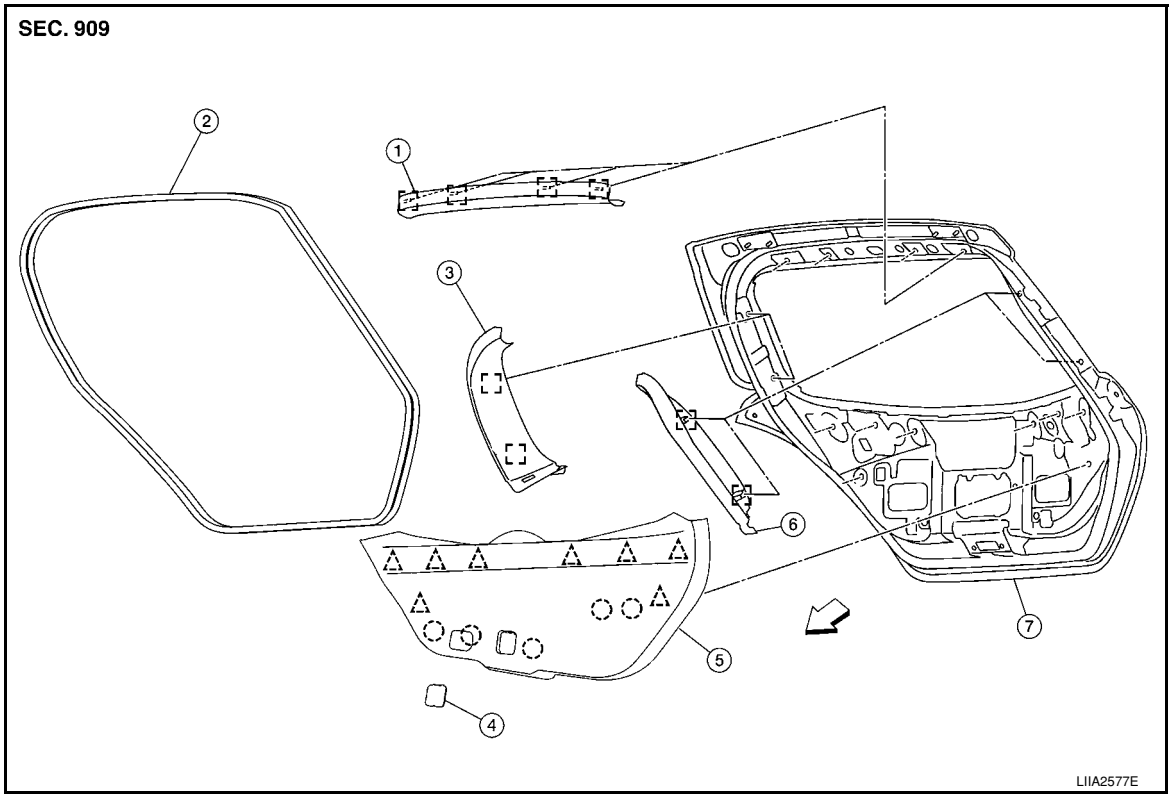

1.	Back door finisher upper	2.	Back door weatherstrip	3.	Back door side garnish (RH)
4.	Cover	5.	Back door finisher lower	6.	Back door side garnish (LH)
7.	Back door	◌	Pawl	⬚	Metal clip
△	Clip C101	⇐	Vehicle front		

REMOVAL

CAUTION:

- **Insert a suitable tool between panel on vehicle and clips (as indicated with arrow) to release clips.**
- **Use a suitable tool when removing metal clips from garnishes.**
- **Be careful not to damage the body while prying to release clips.**
- **Make sure clips are properly aligned in panel holes on body when installing, then press them in completely.**

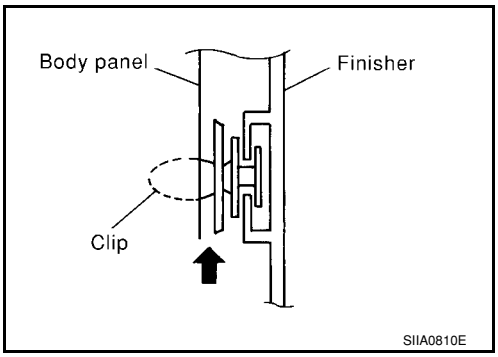

1. Open back door.
2. Release the clips, then lift upward to release the pawls and remove the back door finisher lower.
3. Release the clips, then remove back door side garnish RH/LH.
4. Release the clips, then remove back door finisher upper from the back door.

INSTALLATION

Installation is in the reverse order of removal.

BODY SIDE TRIM

Component

INFOID:0000000001704235

Hatchback Models

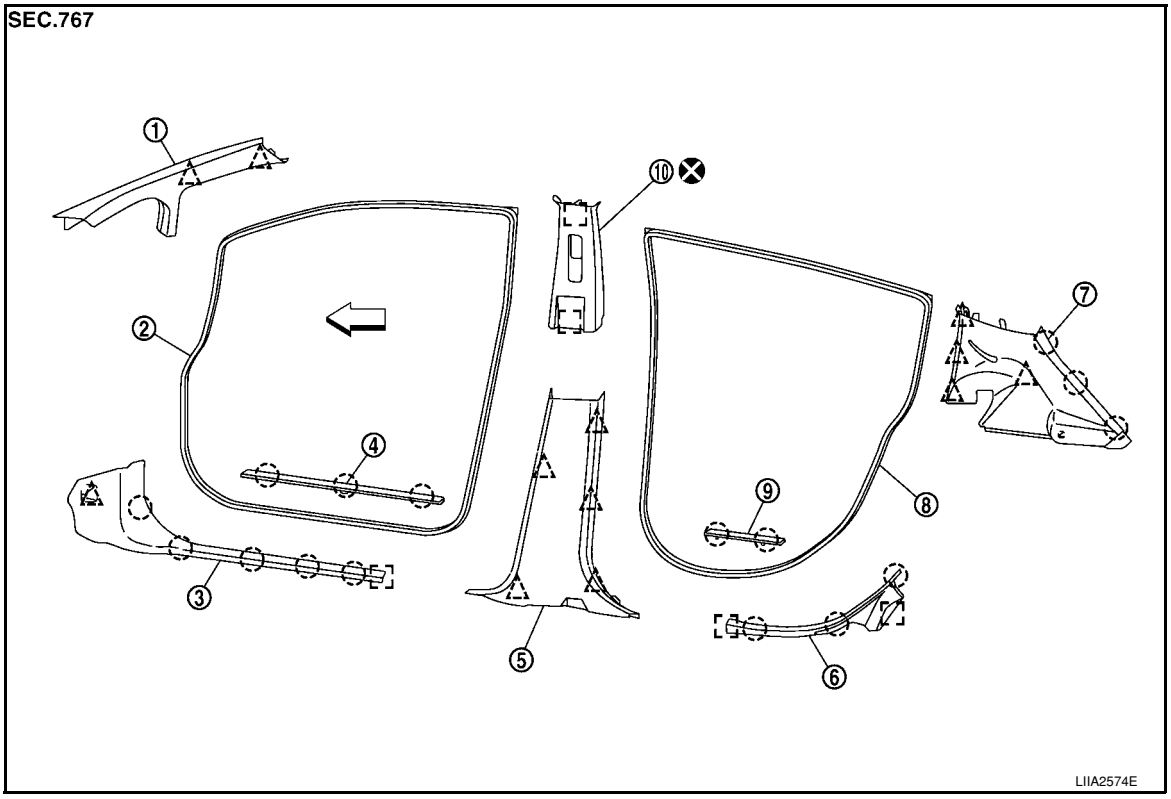

1. Front pillar garnish	2. Front body side welt	3. Front kicking plate inner
4. Front kicking plate outer	5. Center pillar lower garnish	6. Rear kicking plate inner
7. Rear pillar finisher	8. Rear body side welt	9. Rear kicking plate outer
10. Center pillar upper garnish	Pawl	Metal clip
Clip	⇐ Vehicle front	

Sedan Models

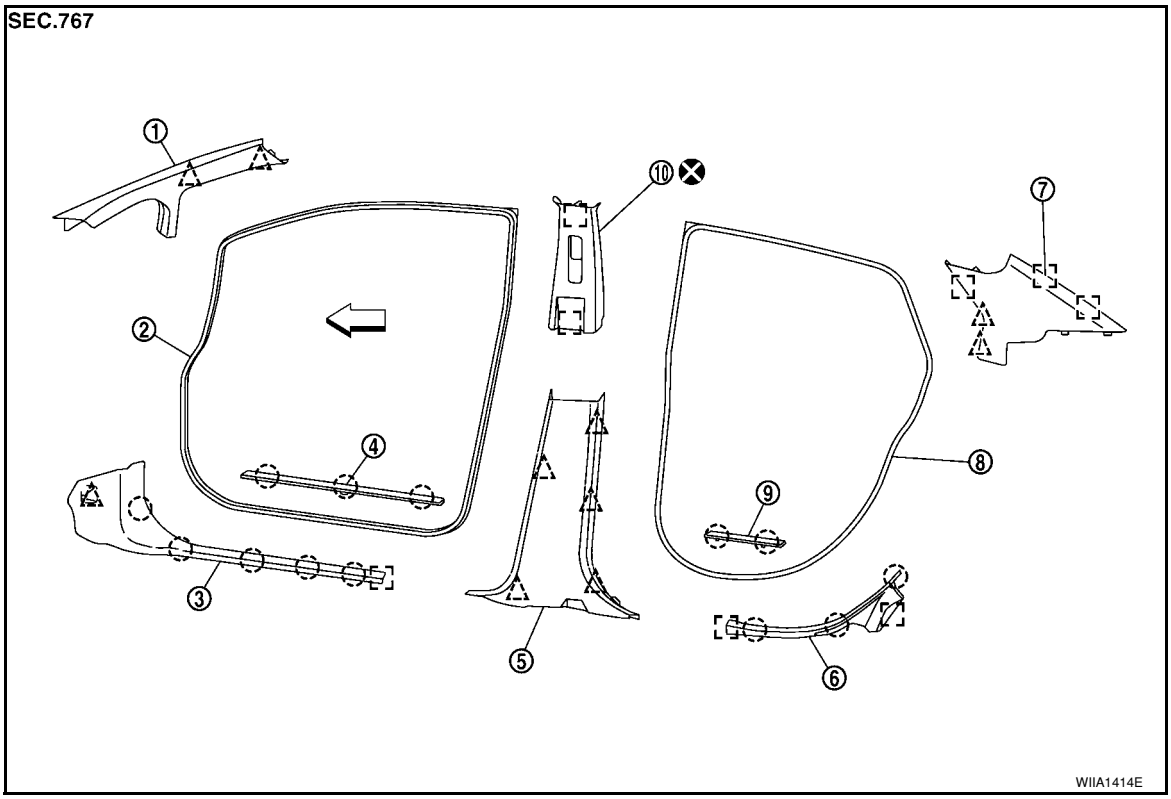

1.	Front pillar garnish	2.	Front body side welt	3.	Front kicking plate inner
4.	Front kicking plate outer	5.	Center pillar lower garnish	6.	Rear kicking plate inner
7.	Rear pillar finisher	8.	Rear body side welt	9.	Rear kicking plate outer
10.	Center pillar upper garnish	◌	Pawl	⬚	Metal clip
△	Clip	⇐	Vehicle front		

Removal and Installation

INFOID:0000000001704236

WARNING:
Do not reuse center pillar upper garnish if removed.
CAUTION:
- **Insert a suitable tool between panel on vehicle and clips (as indicated with arrow) to release clips.**
- **Use a suitable tool when removing metal clips from garnishes.**
- **Be careful not to damage the body while prying to release clips.**
- **Make sure clips are properly aligned in panel holes on body when installing, then press them in completely.**
- **When releasing molded-in pawls or resin clips, follow the steps below to prevent garnish or clip damage.**

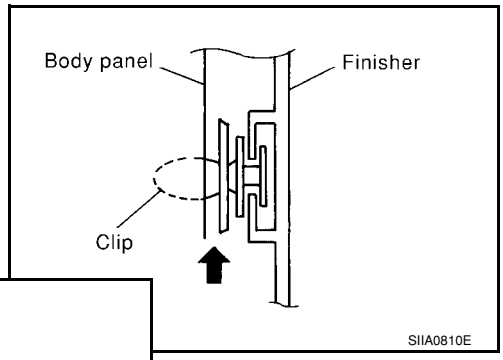

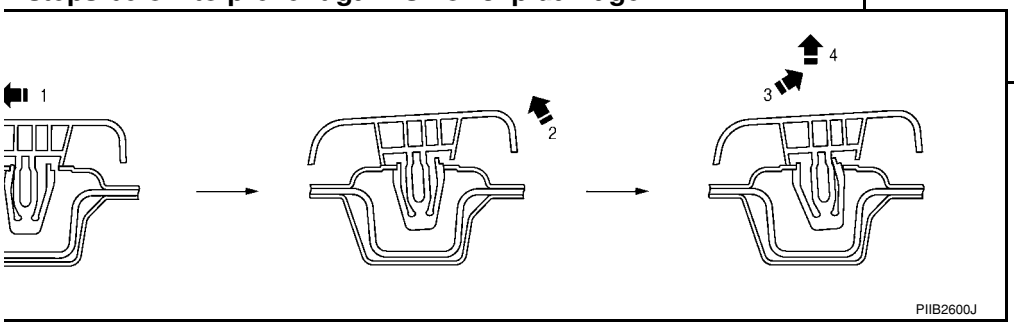

FRONT PILLAR GARNISH

Removal

Release the clips, then remove front pillar garnish.

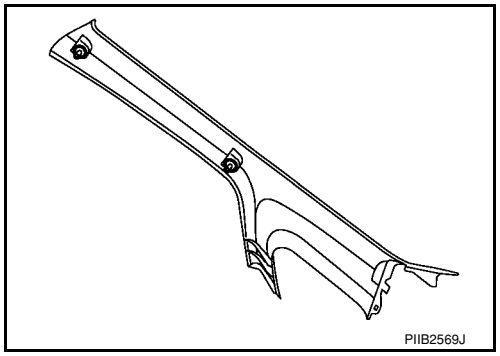

Installation

Installation is in the reverse order of removal.

FRONT KICKING PLATE INNER

Removal

Release the clips, then remove front kicking plate inner.

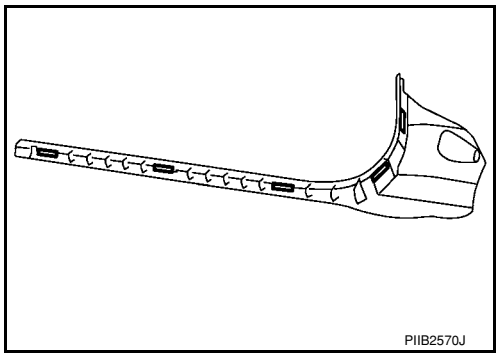

Installation

Installation is in the reverse order of removal.

FRONT KICKING PLATE OUTER

Removal

Release the clips, then remove front kicking plate outer.

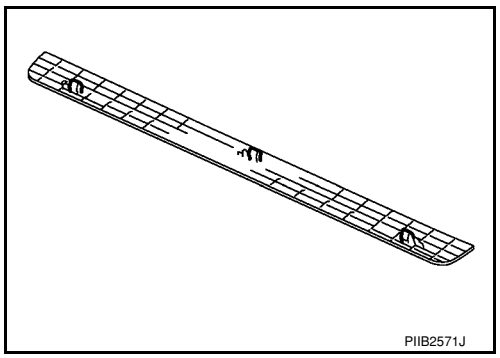

Installation

Installation is in the reverse order of removal.

REAR KICKING PLATE INNER

Removal

Release the clips, then remove rear kicking plate inner.

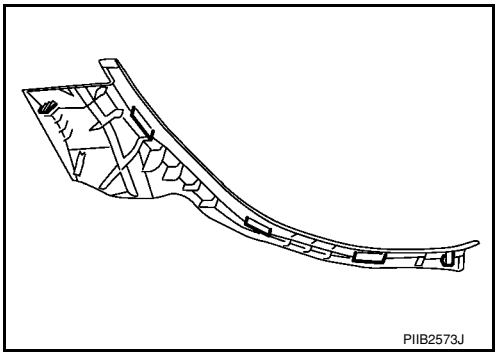

Installation
Installation is in the reverse order of removal.

REAR KICKING PLATE OUTER

Removal
Release the clips, then remove rear kicking plate outer.

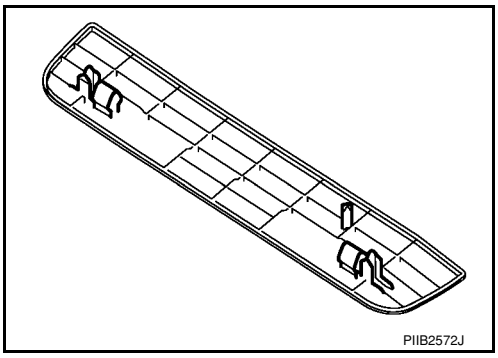

Installation
Installation is in the reverse order of removal.

CENTER PILLAR LOWER GARNISH

Removal

1. Remove front kicking plate inner. Refer to "FRONT KICKING PLATE INNER".
2. Remove rear kicking plate inner. Refer to "REAR KICKING PLATE INNER".
3. Remove front and rear body side welts.
4. Release the clips, then remove center pillar lower garnish.

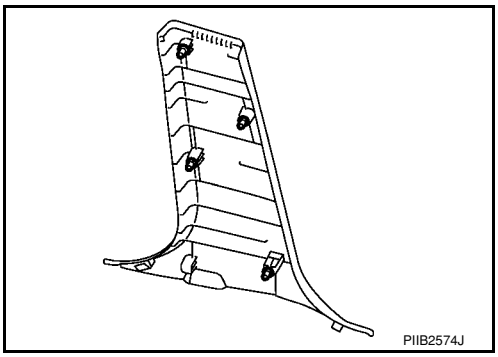

Installation
Installation is in the reverse order of removal.

CENTER PILLAR UPPER GARNISH

Removal

WARNING:
Do not reuse center pillar upper garnish if removed.

1. Remove center pillar lower garnish. Refer to "CENTER PILLAR LOWER GARNISH".

2. Remove front seat belt shoulder anchor. Refer to SB-3, "Removal and Installation of Front Seat Belt".
3. Remove front and rear body side welts.
4. Release the resin clips, then remove center pillar upper garnish.

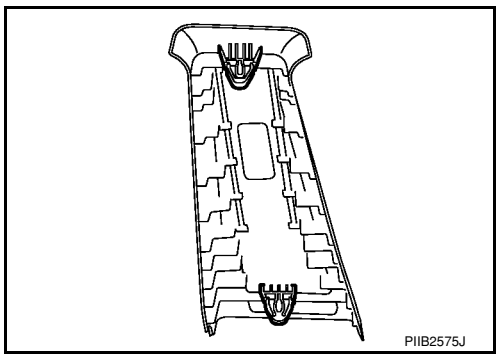

Installation

Installation is in the reverse order of removal.

REAR PILLAR FINISHER

Removal

1. Remove rear seat cushion, rear seatback, and seatback side cushions. Refer to SE-15, "Removal and Installation".
2. Remove rear body side welt.
3. Release the clips, then remove rear pillar finisher.

Installation

Installation is in the reverse order of removal.

REAR PARCEL SHELF FINISHER

Removal and Installation

INFOID:0000000001704237

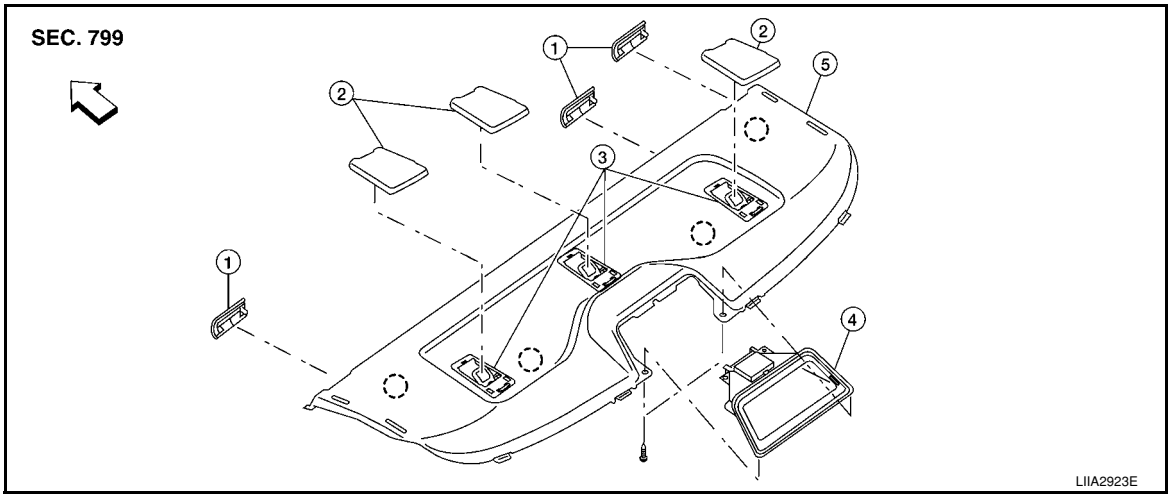

1.	Rear seat belt shoulder anchor cover	2.	Child anchor cover	3.	Child anchor cover base
4.	High mounted stop lamp	5.	Rear parcel shelf finisher	⇐	Vehicle front

REMOVAL

1. Remove rear seat. Refer to SE-15, "Removal and Installation".
2. Remove rear pillar finisher. Refer to EI-38, "Removal and Installation".
3. Remove high mounted stop lamp and disconnect connector.
4. Remove rear parcel shelf finisher.

INSTALLATION

Installation is in the reverse order of removal.

FLOOR TRIM

Removal and Installation

INFOID:0000000001704238

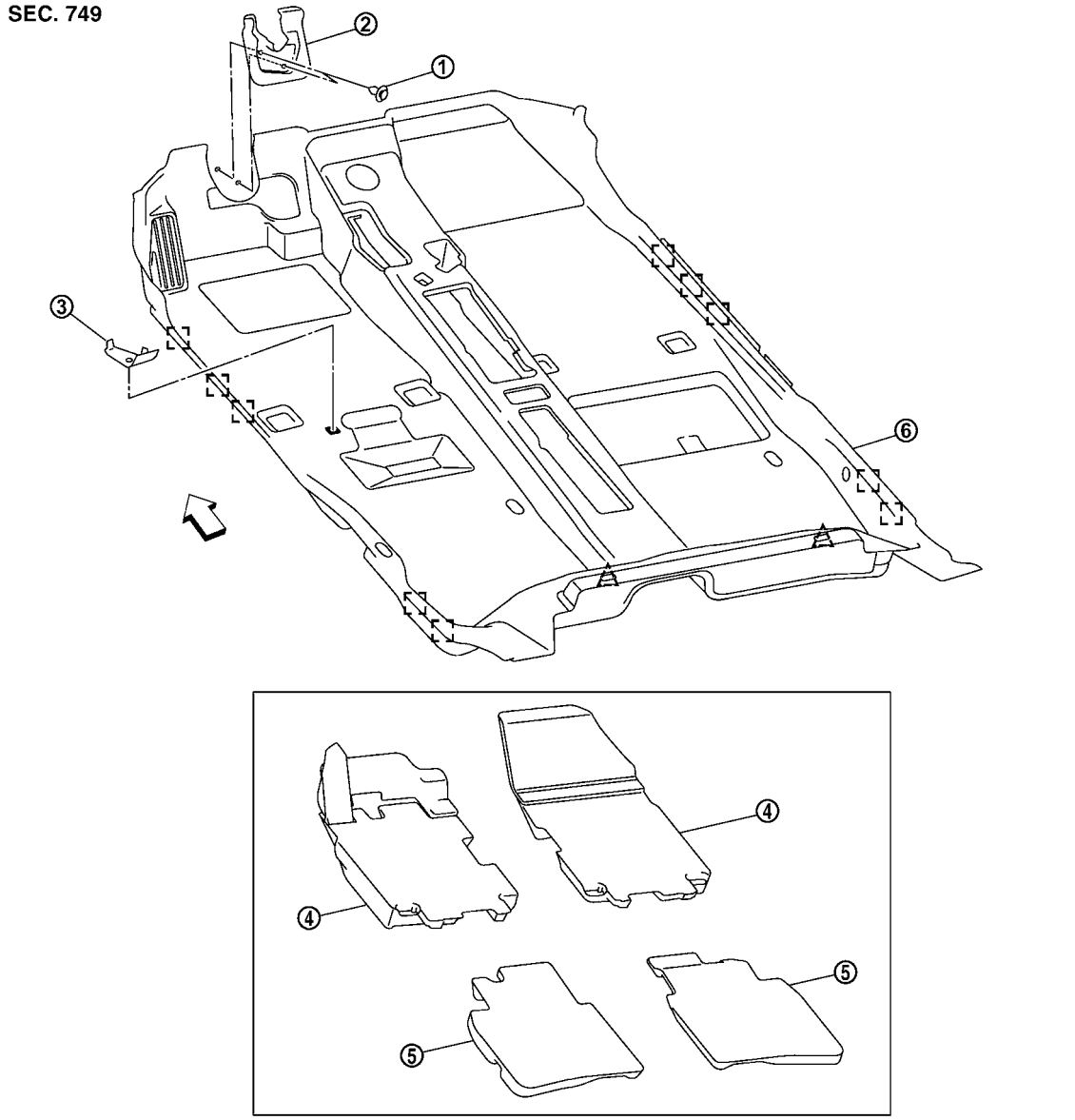

1. Clip C101	2. Steering column shaft cover	3. Floor carpet hook
4. Front floor spacer	5. Rear floor spacer	6. Floor trim
⬚ Metal clip	△ Clip CF110	⇐ Vehicle front

REMOVAL

1. Disconnect both the negative and positive battery cables, then wait at least 3 minutes.
2. Remove front seat assembly RH/LH and rear seat cushion. Refer to SE-11, "Removal and Installation" and SE-15, "Removal and Installation".
3. Remove center console and floor bracket. Refer to IP-11, "Removal and Installation".
4. Remove instrument lower cover. Refer to IP-11, "Removal and Installation".
5. Remove front kicking plate inner RH/LH, center pillar lower garnish RH/LH, and rear kicking plate inner RH/LH. Refer to EI-38, "Removal and Installation".

6. Disconnect floor harness connector.
7. Remove diagnosis sensor unit. Refer to SRS-44.

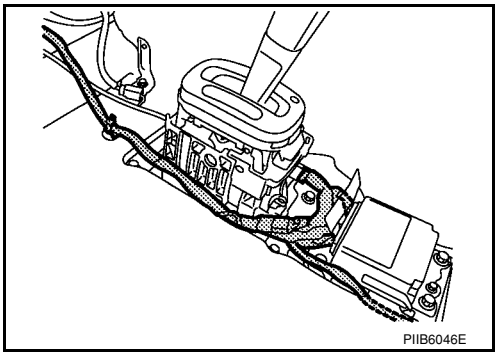
PIIB6046E

8. Remove key interlock cable. Refer to AT-213.

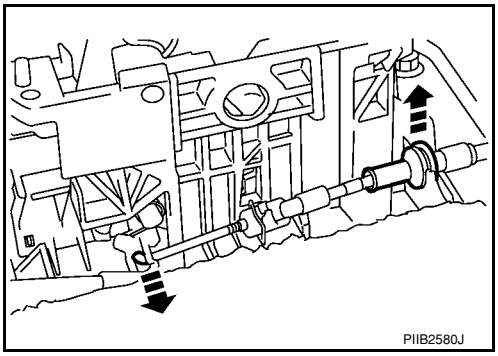
PIIB2580J

9. Remove floor carpet hook.
10. Cut floor trim using a blade knife first between openings (1), then at front edge (2) as shown.

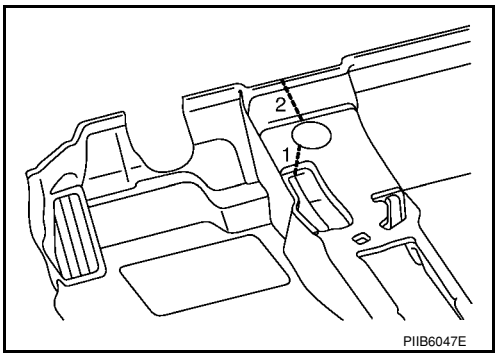

PIIB6047E

11. Release floor trim metal clips after cutting, then pull out floor trim through door opening.
12. Remove floor spacer RH/LH.

INSTALLATION

Installation is in the reverse order of removal.

CAUTION:

When replacing the floor trim with a new one, prepare for installation by cutting it like the old one. Make sure there is a quality fit between floor trim and instrument lower cover by tucking the cut edge completely.

HEADLINING

Component

INFOID:0000000001704239

Hatchback Models

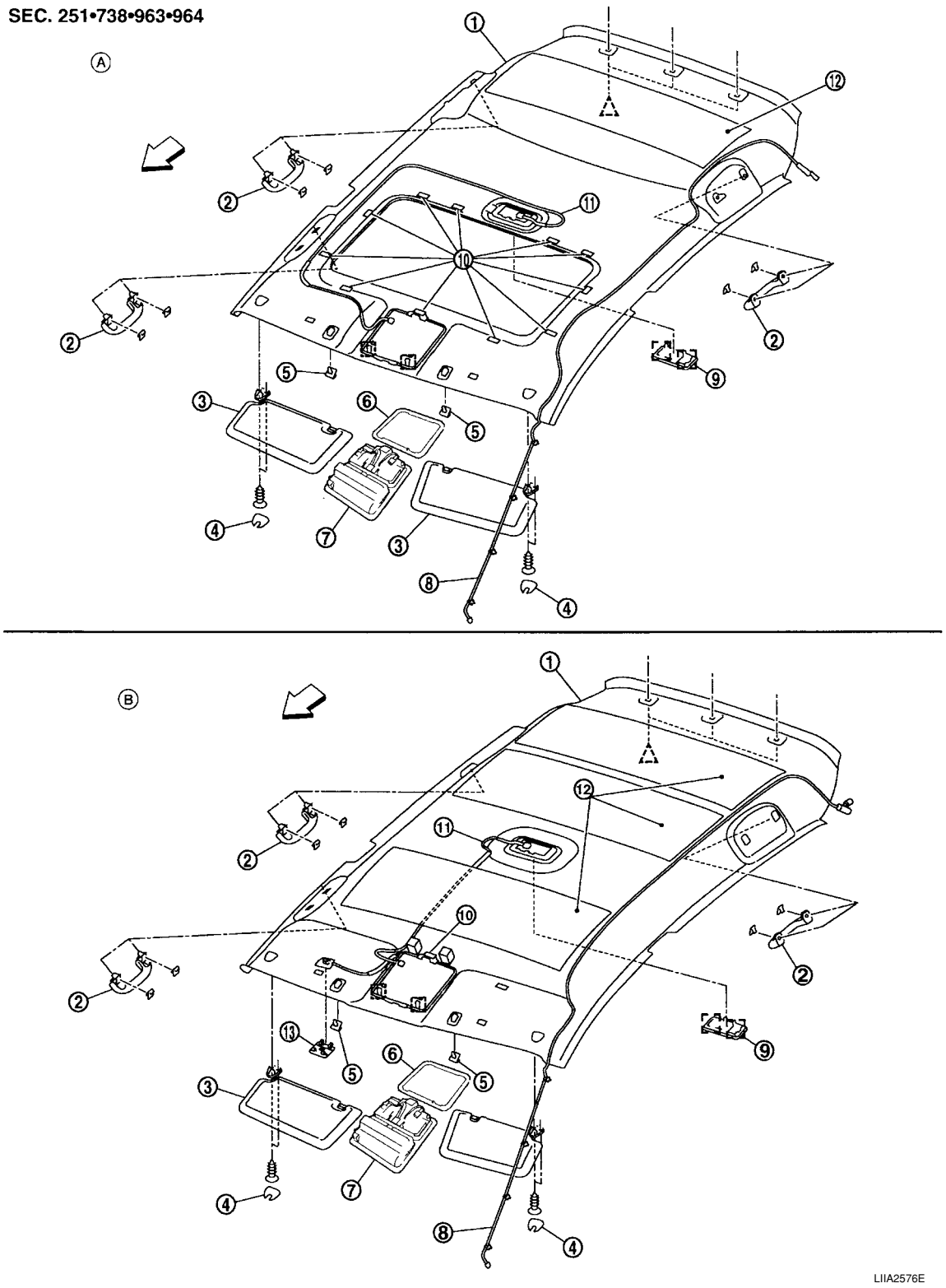

1. Headlining
2. Assist grip
3. Sunvisor
4. Cap
5. Sunvisor holder
6. Roof console retainer

7. Roof console/map lamp assembly (if equipped)	8. Antenna feeder cable	9. Room lamp
10. Dual lock fastener	11. Room lamp harness	12. Insulator
13. Finisher	A. With sunroof	B. Without sunroof
⬚ Metal clip	△ Clip C103	⇐ Vehicle front

Sedan Models

SEC. 251•738•963•964

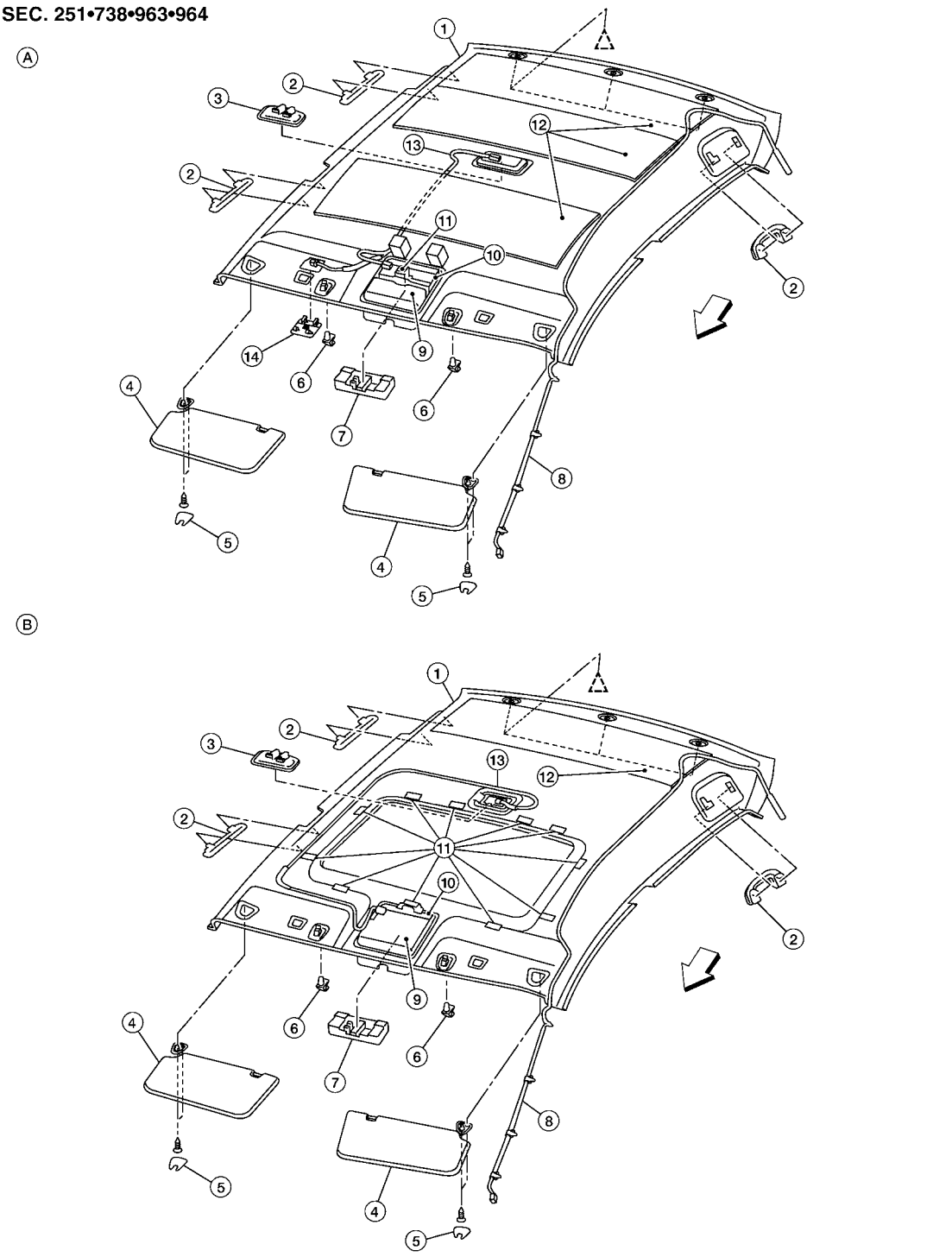

1. Headlining	2. Assist grip	3. Room lamp
4. Sunvisor	5. Cap	6. Sunvisor holder
7. Map lamp assembly (if equipped)	8. Antenna feeder cable	9. Roof console assembly (if equipped)
10. Roof plate (if equipped)	11. Dual lock fastener	12. Insulator
13. Room lamp harness	14. Cover	A. With sunroof
B. Without sunroof	△ Clip C103	⇐ Vehicle front

Removal and Installation - Hatchback

INFOID:0000000001704240

REMOVAL

1. Remove the negative and positive battery cables.
2. Remove front seat assembly RH/LH. Refer to SE-11, "Removal and Installation".
3. Remove rear seat cushion and rear seatback. Refer to SE-15, "Removal and Installation".
4. Remove front seat belt shoulder anchor RH/LH. Refer to SB-3, "Removal and Installation of Front Seat Belt".
5. Remove center console body assembly. Refer to IP-10.
6. Remove front pillar garnish RH/LH. Refer to EI-38, "Removal and Installation".
7. Remove antenna feeder cable clip, then disconnect antenna feeder cable connector.

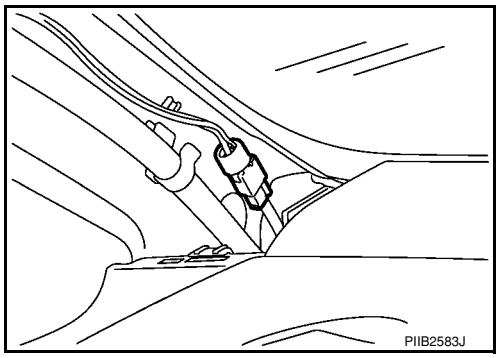

8. Remove front and rear kicking plate inner RH/LH, center pillar lower garnish, center pillar upper garnish, front and rear body side welt RH/LH. Refer to EI-38, "Removal and Installation".

   WARNING:
   Do not reuse center pillar upper garnish if removed.
9. Remove back door weatherstrip. Refer to EI-36.
10. Release the clips using a suitable tool, then remove the front and rear assist grips.

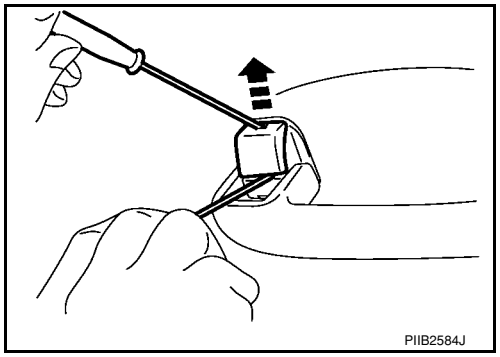

11. Remove the sunvisor caps and screws, then remove sunvisor RH/LH.

12. Remove sunvisor holders RH/LH by rotating 45 degrees, then pulling outward.

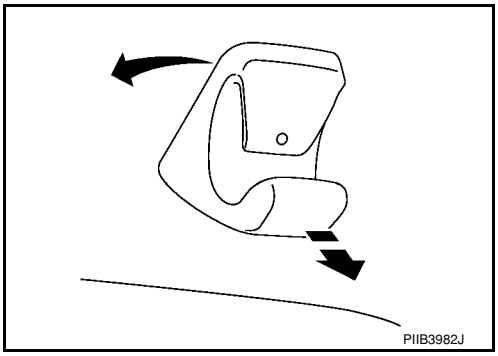

13. Release the metal clips, then remove the roof console/map lamp assembly (if equipped).
14. Release remaining headlining clips.
15. Disconnect antenna feeder cable near rear pillar finisher LH.

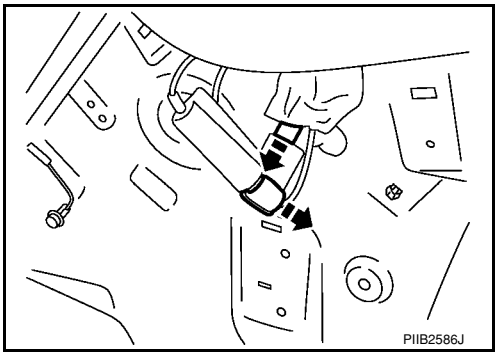

16. Disengage the dual lock fastener on the backside of headlining.
    - Insert a suitable tool into the edge of dual lock fastener, then move the tool side to side horizontally to release it.

    CAUTION:
    Excessive up and down force may cause roof panel damage.

17. Position the headlining so the front edge goes through the opening of the right side front door.

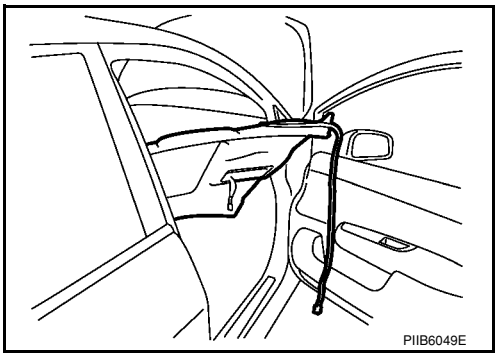

18. Position the headlining so the rear edge goes through the opening of the left rear door, then remove headlining.

CAUTION:
- **2 technicians should be used to avoid damage when removing or replacing headlining.**
- **During headlining removal and installation, cover the center console finisher upper surface to prevent damage.**
- **Set A/T or CVT shift lever to the D position, and make a space to remove front end of headlining right side.**
- **Do not bend headlining when removing.**

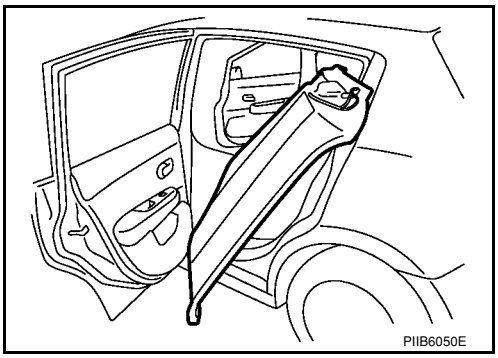

INSTALLATION

Installation is in the reverse order of removal.

CAUTION:

Avoid headlining damage when installing by inserting rear clips first during assembly.

Removal and Installation - Sedan

INFOID:0000000001704241

REMOVAL

1. Remove the negative and positive battery cables.
2. Remove front seat assembly RH/LH. Refer to SE-11, "Removal and Installation".
3. Remove rear seat cushion and rear seatback. Refer to SE-15, "Removal and Installation".
4. Remove front seat belt shoulder anchor RH/LH. Refer to SB-3, "Removal and Installation of Front Seat Belt".
5. Remove center console body assembly. Refer to IP-10.
6. Remove front pillar garnish RH/LH. Refer to EI-38, "Removal and Installation".
7. Remove antenna feeder cable clip, then disconnect antenna feeder cable connector.

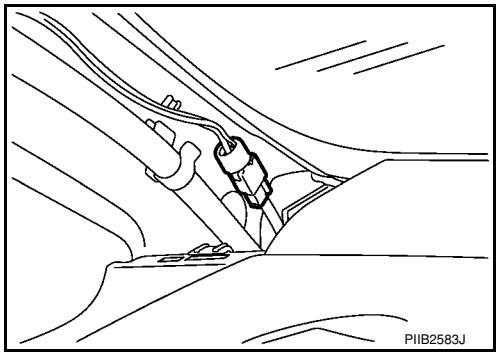

8. Remove front and rear kicking plate inner RH/LH, center pillar lower garnish, center pillar upper garnish, front and rear body side welt RH/LH. Refer to EI-38, "Removal and Installation".

   WARNING:
   Do not reuse center pillar upper garnish if removed.
9. Release the clips using a suitable tool, then remove the front and rear assist grips.

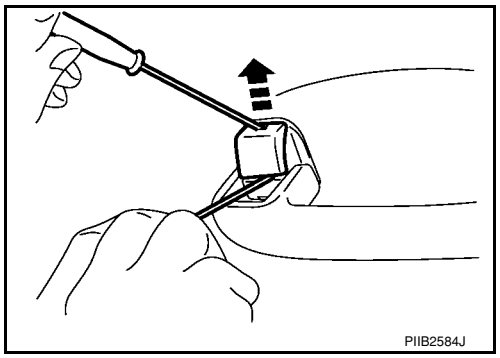

10. Remove the sunvisor caps and screws, then remove sunvisor RH/LH.
11. Remove sunvisor holders RH/LH by rotating 45 degrees, then pulling outward.

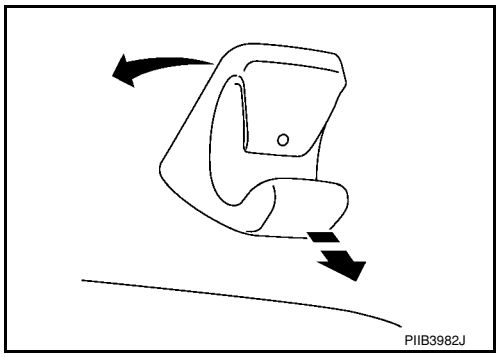

12. Release the metal clips, then remove the roof console/map lamp assembly (if equipped).
13. Release remaining headlining clips.

14. Disconnect antenna feeder cable near rear pillar finisher LH.

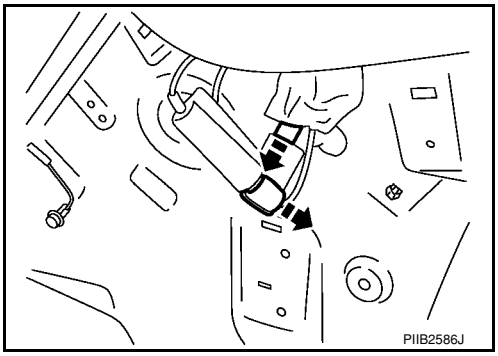

15. Disengage the dual lock fastener on the backside of headlining.
    - Insert a suitable tool into the edge of dual lock fastener, then move the tool side to side horizontally to release it.

    CAUTION:
    Excessive up and down force may cause roof panel damage.

16. Position the headlining so the front edge goes through the opening of the right side front door.
17. Position the headlining so the rear edge goes through the opening of the left rear door, then remove headlining.

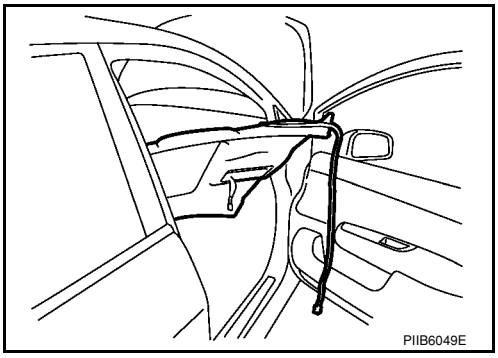

CAUTION:
- **2 technicians should be used to avoid damage when removing or replacing headlining.**
- **During headlining removal and installation, cover the center console finisher upper surface to prevent damage.**
- **Set A/T or CVT shift lever to the D position, and make a space to remove front end of headlining right side.**
- **Do not bend headlining when removing.**

INSTALLATION

Installation is in the reverse order of removal.

CAUTION:
Avoid headlining damage when installing by inserting rear clips first during assembly.

LUGGAGE FLOOR TRIM

Removal and Installation

INFOID:0000000001704242

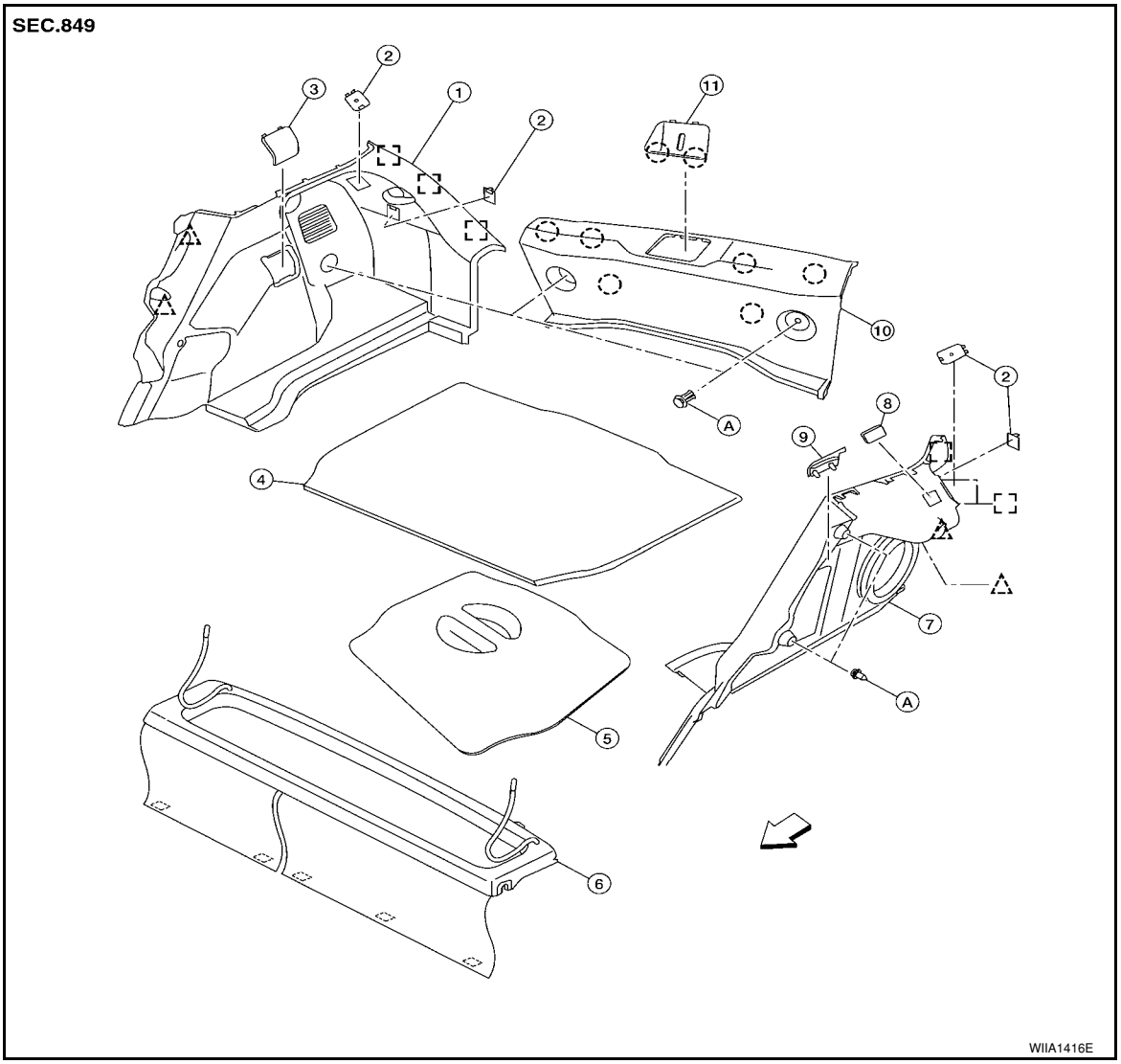

1.	Luggage side lower finisher RH	2.	Access cover	3.	Shock absorber cover RH
4.	Luggage floor center board	5.	Luggage floor spacer	6.	Tonneau board
7.	Luggage side lower finisher LH	8.	Cargo lamp	9.	Shock absorber cover LH
10.	Luggage rear plate	11.	Striker cover plate	◌	Pawl
⬚	Metal clip	△	Clip C101	⇐	Vehicle front

REMOVAL

CAUTION:

- **Insert a trim stick or suitable tool between panel on vehicle and clips (as indicated with arrow) to release clips.**
- **Use a trim stick or suitable tool when removing metal clips from garnishes.**
- **Be careful not to damage the body while prying to release clips.**
- **Make sure clips are properly aligned in panel holes on body when installing, then press them in completely.**

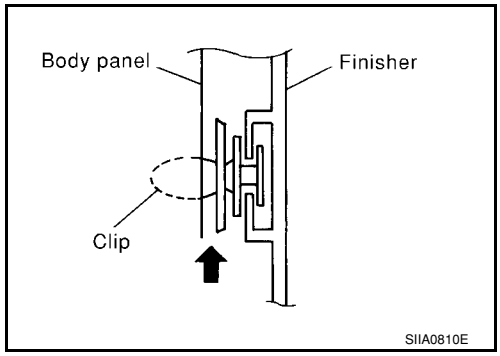

1. Disconnect the negative and positive battery cables.
2. Open the rear doors and the back door.
3. Remove the rear seat cushion and seatback and seatback side RH/LH. Refer to SE-14.
4. Lift and remove the luggage floor center board and luggage floor spacer.
5. Detach the tethers, then pull upward to remove the tonneau board.
6. Release the clips, then remove the striker cover and luggage rear plate.
7. Release the clips, then remove the luggage side lower finisher RH/LH.
   - For LH side, disconnect cargo lamp connector.

INSTALLATION

Installation is in the reverse order of removal.

TRUNK ROOM TRIM & TRUNK LID FINISHER

Removal and Installation

INFOID:0000000001704243

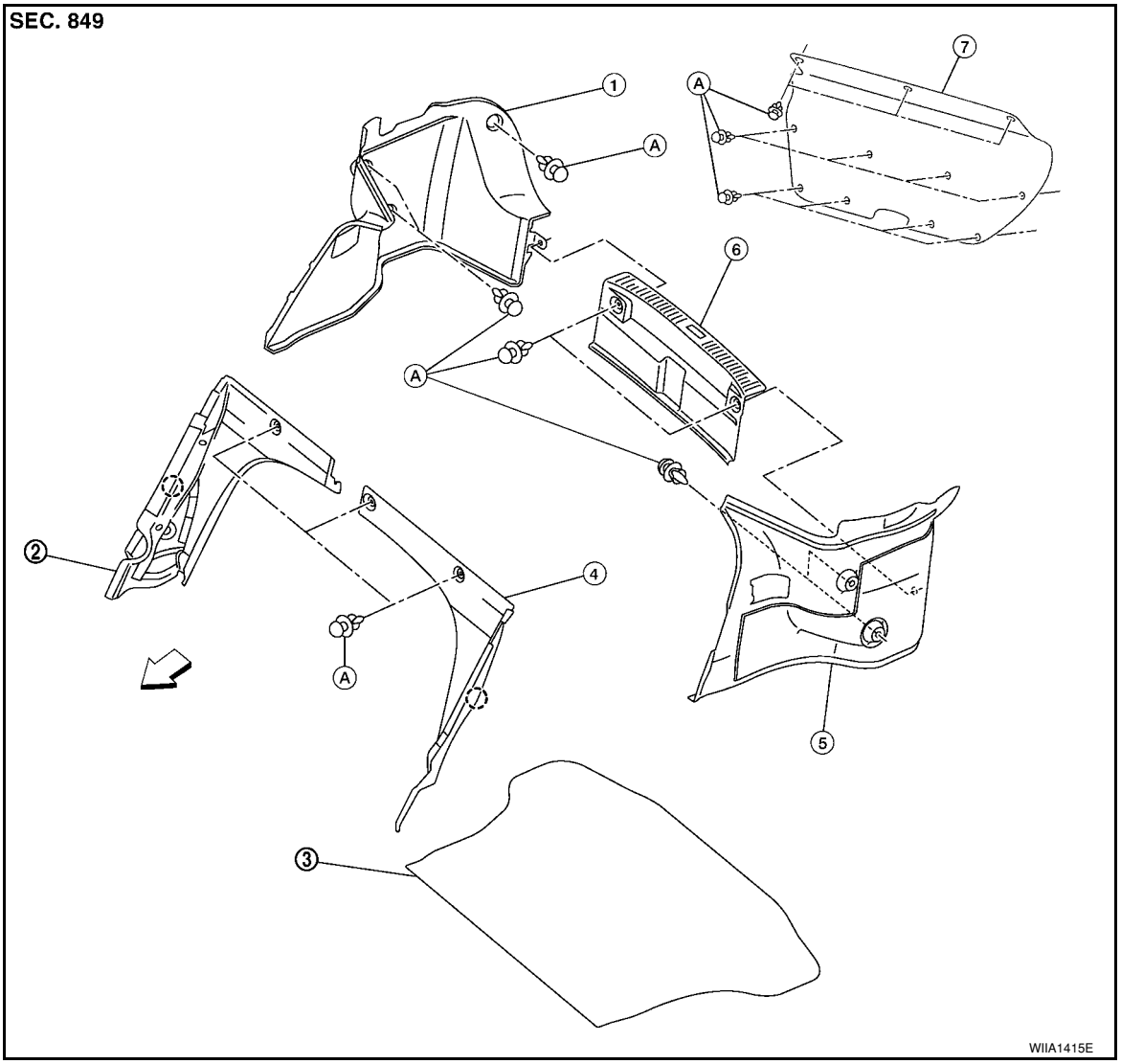

1.	Trunk side finisher RH	2.	Seat back finisher RH (if equipped)	3.	Trunk floor carpet
4.	Seat back finisher LH (if equipped)	5.	Trunk side finisher LH	6.	Trunk rear plate
7.	Trunk lid finisher inner	A.	Clip C205	⇐	Vehicle front

REMOVAL

CAUTION:

- **Insert a trim stick or suitable tool between panel on vehicle and clips (as indicated with arrow) to release clips.**
- **Be careful not to damage the body while prying to release clips.**
- **Make sure clips are properly aligned in panel holes on body when installing, then press them in completely.**

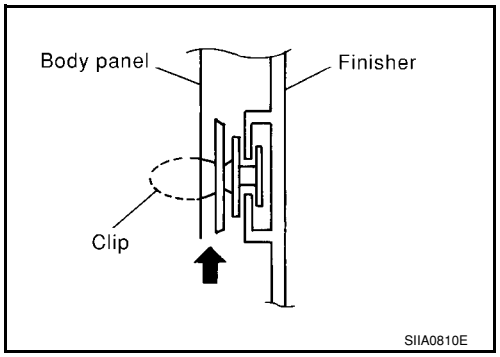

1. Open trunk lid.
2. Position the rear seat cushion to the forward most position, then remove the rear seatback and seatback side RH/LH. Refer to SE-14.
3. Release the clips, then remove the seatback finisher RH/LH.
4. Lift and remove the trunk floor carpet.

5. Release the clips, then remove the trunk rear plate.
6. Release the clips, then remove the trunk side finisher RH/LH.
7. Release the clips and remove the trunk lid finisher inner from the trunk lid.

INSTALLATION

Installation is in the reverse order of removal.

SECTION EM
ENGINE MECHANICAL

CONTENTS

SERVICE INFORMATION 3

PRECAUTIONS 3
Precaution for Supplemental Restraint System (SRS) "AIR BAG" and "SEAT BELT PRE-TENSIONER" 3
Precaution for Procedure without Cowl Top Cover..... 3
Precaution Necessary for Steering Wheel Rotation After Battery Disconnect 3
Precaution for Drain Coolant 4
Precaution for Disconnecting Fuel Piping 4
Precaution for Removal and Disassembly 4
Precaution for Inspection, Repair and Replacement 4
Precaution for Assembly and Installation 4
Parts Requiring Angular Tightening 4
Precaution for Liquid Gasket 5

PREPARATION 7
Special Service Tool 7
Commercial Service Tool 9

NOISE, VIBRATION AND HARSHNESS (NVH) TROUBLESHOOTING 11
NVH Troubleshooting - Engine Noise 11
Use the Chart Below to Help You Find the Cause of the Symptom 12

DRIVE BELTS 13
Component 13
Checking Drive Belts 13
Tension Adjustment 13
Removal and Installation 13
Component 14
Removal and Installation of Drive Belt Auto Tensioner 14

AIR CLEANER AND AIR DUCT 16
Component 16
Removal and Installation 16
Changing Air Cleaner Filter 17

INTAKE MANIFOLD 18
Component 18
Removal and Installation 18

EXHAUST MANIFOLD 21
Component 21
Removal and Installation 21

OIL PAN 24
Component 24
Removal and Installation 24

IGNITION COIL, SPARK PLUG AND ROCKER COVER 30
Component 30
Removal and Installation 30

FUEL INJECTOR AND FUEL TUBE 33
Component 33
Removal and Installation 33

TIMING CHAIN 37
Component 37
Removal and Installation 38

CAMSHAFT 47
Component 47
Removal and Installation 47
Valve Clearance 55

OIL SEAL 59
Removal and Installation of Valve Oil Seal 59
Removal and Installation of Front Oil Seal 59
Removal and Installation of Rear Oil Seal 60

CYLINDER HEAD 62
On-Vehicle Service 62
Component 63
Removal and Installation 63
Component 65
Disassembly and Assembly 66
Inspection After Disassembly 67

ENGINE ASSEMBLY 72
Component 72
Removal and Installation 72

CYLINDER BLOCK 76
Component 76
Disassembly and Assembly 77
How to Select Piston and Bearing 85
Inspection After Disassembly 93

SERVICE DATA AND SPECIFICATIONS (SDS) 104
Standard and Limit 104

SERVICE INFORMATION

PRECAUTIONS

Precaution for Supplemental Restraint System (SRS) "AIR BAG" and "SEAT BELT PRE-TENSIONER"

INFOID:0000000001702460

The Supplemental Restraint System such as “AIR BAG” and “SEAT BELT PRE-TENSIONER”, used along with a front seat belt, helps to reduce the risk or severity of injury to the driver and front passenger for certain types of collision. This system includes seat belt switch inputs and dual stage front air bag modules. The SRS system uses the seat belt switches to determine the front air bag deployment, and may only deploy one front air bag, depending on the severity of a collision and whether the front occupants are belted or unbelted.
Information necessary to service the system safely is included in the SRS and SB section of this Service Manual.

WARNING:

- **To avoid rendering the SRS inoperative, which could increase the risk of personal injury or death in the event of a collision which would result in air bag inflation, all maintenance must be performed by an authorized NISSAN/INFINITI dealer.**
- **Improper maintenance, including incorrect removal and installation of the SRS, can lead to personal injury caused by unintentional activation of the system. For removal of Spiral Cable and Air Bag Module, see the SRS section.**
- **Do not use electrical test equipment on any circuit related to the SRS unless instructed to in this Service Manual. SRS wiring harnesses can be identified by yellow and/or orange harnesses or harness connectors.**

Precaution for Procedure without Cowl Top Cover

INFOID:0000000001702461

When performing the procedure after removing cowl top cover, cover the lower end of windshield.

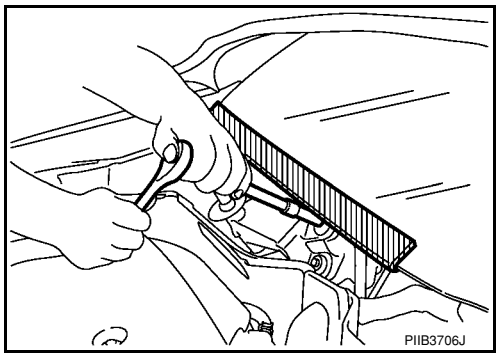

Precaution Necessary for Steering Wheel Rotation After Battery Disconnect

INFOID:0000000001702462

NOTE:

- This Procedure is applied only to models with Intelligent Key system and NATS (NISSAN ANTI-THEFT SYSTEM).
- Remove and install all control units after disconnecting both battery cables with the ignition knob in the ″LOCK″ position.
- Always use CONSULT-III to perform self-diagnosis as a part of each function inspection after finishing work. If DTC is detected, perform trouble diagnosis according to self-diagnostic results.

For models equipped with the Intelligent Key system and NATS, an electrically controlled steering lock mechanism is adopted on the key cylinder.
For this reason, if the battery is disconnected or if the battery is discharged, the steering wheel will lock and steering wheel rotation will become impossible.
If steering wheel rotation is required when battery power is interrupted, follow the procedure below before starting the repair operation.

OPERATION PROCEDURE

1. Connect both battery cables.
   NOTE:
   Supply power using jumper cables if battery is discharged.

2. Use the Intelligent Key or mechanical key to turn the ignition switch to the ″ACC″ position. At this time, the steering lock will be released.
3. Disconnect both battery cables. The steering lock will remain released and the steering wheel can be rotated.
4. Perform the necessary repair operation.
5. When the repair work is completed, return the ignition switch to the ″LOCK″ position before connecting the battery cables. (At this time, the steering lock mechanism will engage.)
6. Perform a self-diagnosis check of all control units using CONSULT-III.

Precaution for Drain Coolant

INFOID:0000000001702463

- Drain coolant when engine is cooled.

Precaution for Disconnecting Fuel Piping

INFOID:0000000001702464

- Before starting work, make sure no fire or spark producing items are in the work area.
- Release fuel pressure before disassembly.
- After disconnecting pipes, plug openings to stop fuel leakage.

Precaution for Removal and Disassembly

INFOID:0000000001702465

- When instructed to use special service tools, use the specified tools. Always be careful to work safely, avoid forceful or uninstructed operations.
- Exercise maximum care to avoid damage to mating or sliding surfaces.
- Cover openings of engine system with tape or the equivalent, if necessary, to seal out foreign materials.
- Mark and arrange disassembly parts in an organized way for easy troubleshooting and assembly.
- When loosening nuts and bolts, as a basic rule, start with the one furthest outside, then the one diagonally opposite, and so on. If the order of loosening is specified, do exactly as specified. Power tools may be used where noted in the step.

Precaution for Inspection, Repair and Replacement

INFOID:0000000001702466

- Before repairing or replacing, thoroughly inspect parts. Inspect new replacement parts in the same way, and replace if necessary.

Precaution for Assembly and Installation

INFOID:0000000001702467

- Use torque wrench to tighten bolts or nuts to specification.
- When tightening nuts and bolts, as a basic rule, equally tighten in several different steps starting with the ones in center, then ones on inside and outside diagonally in this order. If the order of tightening is specified, do exactly as specified.
- Replace with new gasket, packing, oil seal or O-ring.
- Thoroughly wash, clean, and air-blow each part. Carefully check oil or coolant passages for any restriction and blockage.
- Avoid damaging sliding or mating surfaces. Completely remove foreign materials such as cloth lint or dust. Before assembly, oil sliding surfaces well.
- Release air within route after draining coolant.
- Before starting engine, apply fuel pressure to fuel lines with turning ignition switch ON (with engine stopped). Then make sure that there are no leaks at fuel line connections.
- After repairing, start engine and increase engine speed to check coolant, fuel, oil, and exhaust systems for leakage.

Parts Requiring Angular Tightening

INFOID:0000000001702468

- Use an angle wrench for the final tightening of the following engine parts:
- Cylinder head bolts
- Camshaft sprocket (INT)
- Main bearing cap bolts
- Connecting rod cap nuts
- Crankshaft pulley bolt (No angle wrench is required as the bolt flange is provided with notches for angular tightening)

Tool number : KV10112100 (BT-8653-A)

- Do not use a torque value for final tightening.
- The torque value for these parts are for a preliminary step.
- Ensure thread and seat surfaces are clean and coated with engine oil.

Precaution for Liquid Gasket

INFOID:0000000001702469

REMOVAL OF LIQUID GASKET SEALING

- After removing the bolts and nuts, separate the mating surface and remove the sealant using Tool.

Tool number : KV10111100 (J-37228)

CAUTION:
Be careful not to damage the mating surfaces.

- In areas where the cutter is difficult to use, use a plastic hammer to lightly tap (1) the cutter where the RTV Silicone Sealant is applied. Use a plastic hammer to slide the cutter (2) by tapping on the side.

CAUTION:
If for some unavoidable reason a tool such as a flat-bladed screwdriver is used, be careful not to damage the mating surfaces.

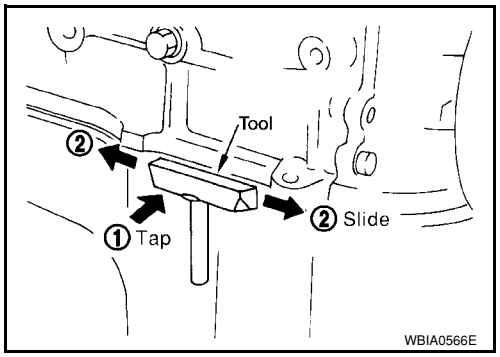

LIQUID GASKET APPLICATION PROCEDURE

1. Using a scraper, remove the old Silicone RTV Sealant adhering to the gasket application surface and the mating surface.
   - Remove the sealant completely from the groove of the gasket application surface, bolts, and bolt holes.
2. Thoroughly clean the gasket application surface and the mating surface and remove adhering moisture, grease and foreign materials.
3. Attach the sealant tube to the tube presser.
   Use Genuine Silicone RTV Sealant or equivalent. Refer to GI-42, "Recommended Chemical Product and Sealant".

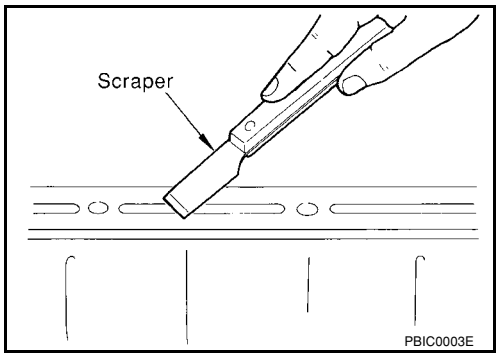

4. Apply the sealant without breaks to the specified location using Tool.

   Tool number WS39930000 (–)

   - If there is a groove for the sealant application, apply the sealant to the groove.
   - As for the bolt holes, normally apply the sealant inside the holes. If specified, it should be applied outside the holes. Make sure to read the text of this manual.
   - Within five minutes of the sealant application, install the mating component.
   - If the sealant protrudes, wipe it off immediately.
   - Do not retighten after the installation.

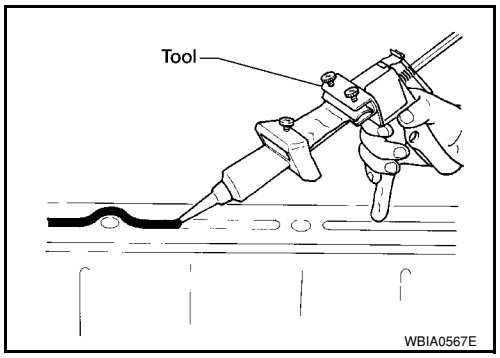

- After 30 minutes or more have passed from the installation, fill the engine with the specified oil and coolant. Refer to MA-10, "Fluids and Lubricants".

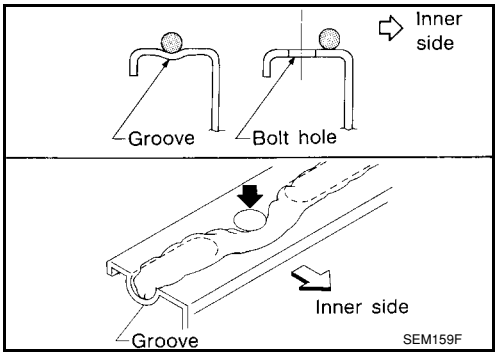

CAUTION:
Follow all specific instructions in this manual.

PREPARATION

Special Service Tool

INFOID:0000000001702470

The actual shapes of Kent-Moore tools may differ from those of special service tools illustrated here.

Tool number (Kent-Moore No.) Tool name		Description
KV10111100 (J-37228) Seal cutter	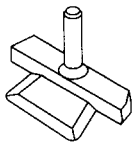 NT046	Removing steel oil pan and rear timing chain case
KV10112100 (BT-8653-A) Angle wrench	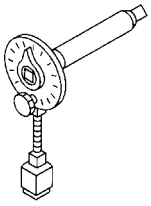 NT014	Tightening bolts for bearing cap, cylinder head, etc.
KV10107902 (J-38959) Valve oil seal puller	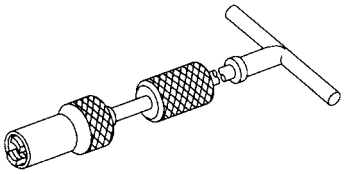 S-NT011	Removing valve oil seal
EM03470000 (J-8037) Piston ring compressor	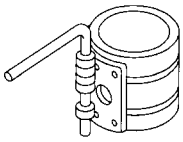 NT044	Installing piston assembly into cylinder bore
KV101092S0 (J-26336-B) Valve spring compressor 1 KV10109210 (J-26336-20) Attachment 2 KV10109220 (—) 3. KV10109230 Adapter (M8)	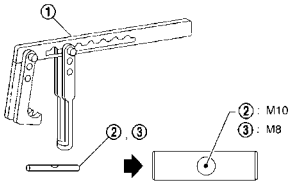 NT718	Disassembling and assembling valve mechanism
WS39930000 (—) Tube presser	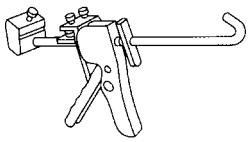 NT052	Pressing the tube of liquid gasket

Tool number (Kent-Moore No.) Tool name		Description
ST16610001 (J-23907) Pilot bushing puller	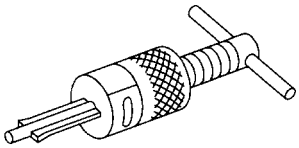	Removing crankshaft pilot bushing
KV11103000 (—) Pulley puller	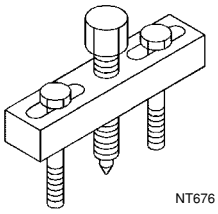	Removing crankshaft pulley
KV991J0050 (J-44626) Air fuel sensor Socket	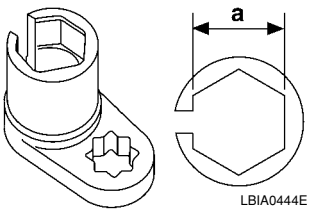	Loosening or tightening air fuel ratio A/F sensor **a: 22 mm (0.87 in)**
KV10114400 (J-38365) Heated oxygen sensor wrench	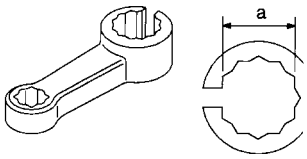	Loosening or tightening rear heated oxygen sensor **a: 22 mm (0.87 in)**
KV11105210 (J-44716) Stopper plate	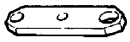	Securing driveplate and flywheel
KV10115600 (J-38958) Valve oil seal drift	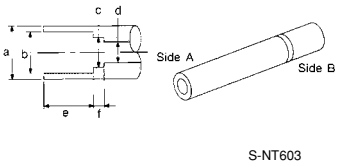	Installing valve oil seal **Use side A.** **a: 20 (0.79) dia.** **b: 13 (0.51) dia.** **c: 10.3 (0.406) dia.** **d: 8 (0.31) dia.** **e: 10.7 (0.421)** **f: 5 (0.20)**
KV10115801 (—) Oil filter wrench	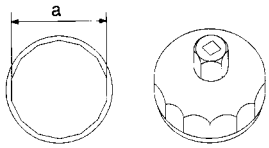	Removing and installing oil filter **a: 64.3 mm (2.531 in)**

Commercial Service Tool

INFOID:0000000001702471

(Kent-Moore No.) Tool name	Description
(BT-3373-F) Belt tension gauge 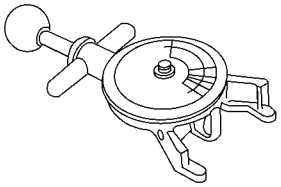 AMA126	Checking drive belt tension
Power tool 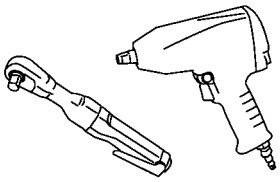 PBIC0190E	Loosening bolts and nuts
Spark plug wrench 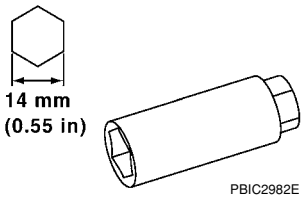 PBIC2982E	Removing and installing spark plug
Valve seat cutter set 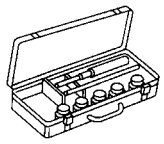 NT048	Finishing valve seat dimensions
Piston ring expander 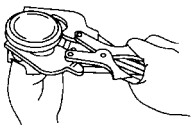 NT030	Removing and installing piston ring
KV10109300 (—) Pulley holder 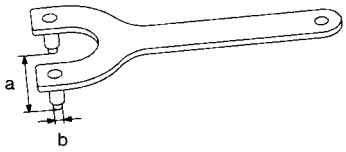 NT628	Removing and installing crankshaft pulley

(Kent-Moore No.) Tool name		Description
KV10111800 Valve guide drift	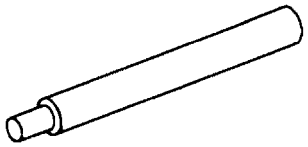 PBIC4012E	Removing and installing valve guide
Valve guide reamer	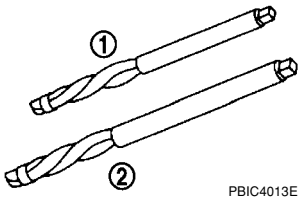 PBIC4013E	(1): Reaming valve guide inner hole (2): Reaming hole for oversize valve guide
(J-43897-18) (J-43897-12) Oxygen sensor thread cleaner	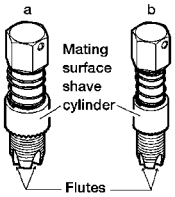 AEM488	Reconditioning the exhaust system threads before installing a new oxygen sensor (Use with anti-seize lubricant shown below.) **a: J-43897-18 (18 mm dia.) for zirconia oxygen sensor** **b: J-43897-12 (12 mm dia.) for titania oxygen sensor**
Anti-seize lubricant (Permatex 133AR or equivalent meeting MIL specification MIL-A-907)	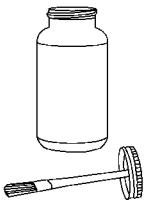 AEM489	Lubricating oxygen sensor thread cleaning tool when reconditioning exhaust system threads
E20 Torx® Socket (J-45816)	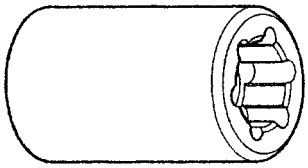 LBIA0285E	Removing and installing drive plate and flywheel bolts

NOISE, VIBRATION AND HARSHNESS (NVH) TROUBLESHOOTING

NVH Troubleshooting - Engine Noise

INFOID:0000000001702472

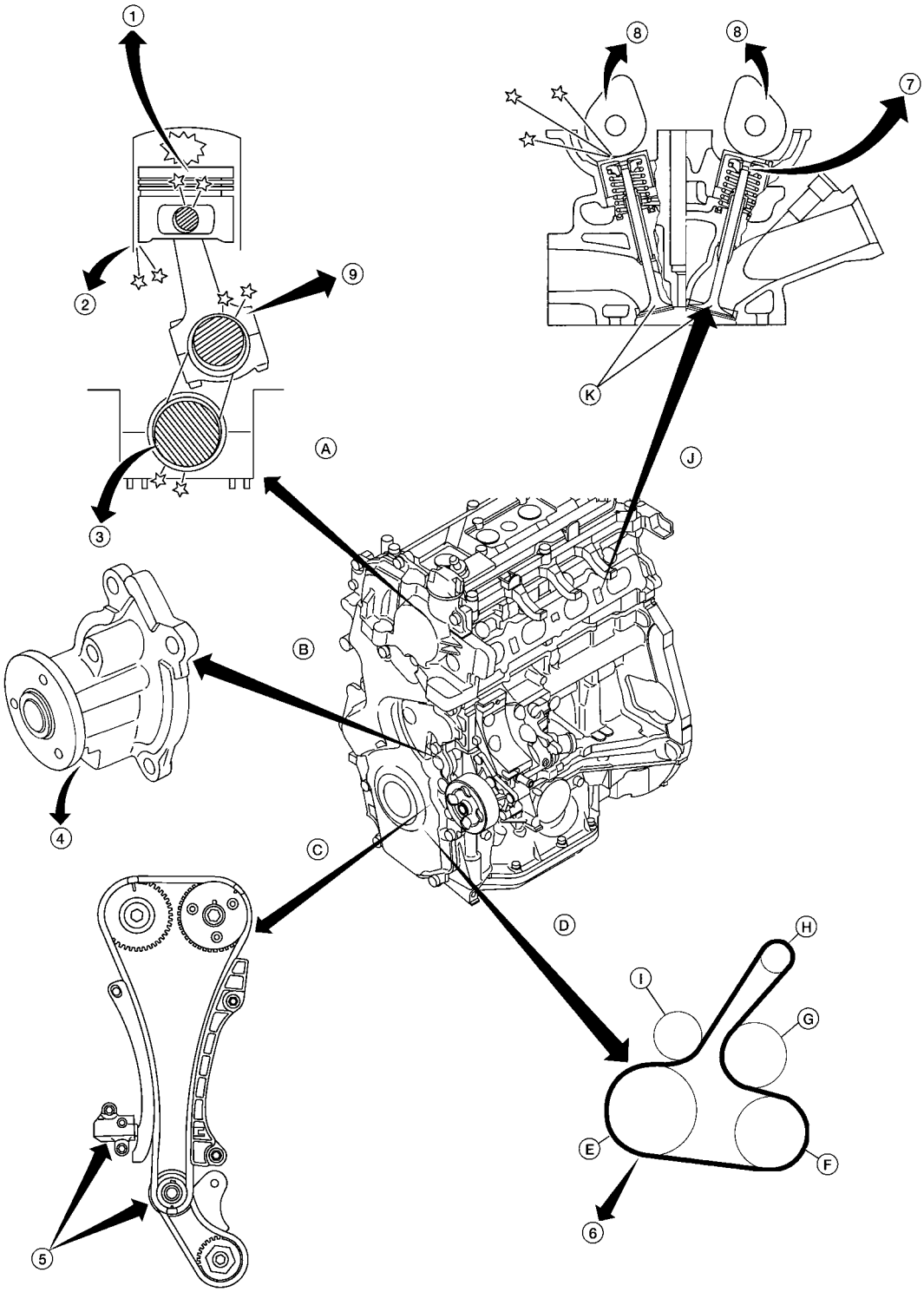

WBIA0769E

1.	Piston pin noise	2.	Piston slap noise	3.	Main bearing noise
4.	Water pump noise	5.	Timing chain and tensioner noise	6.	Drive belt noise (stick/slipping)
7.	Tappet noise	8.	Camshaft bearing noise	9.	Connecting rod noise
A.	Rotational mechanism	B.	Water pump	C.	Timing chain

D. Drive belt
E. Crankshaft pulley
F. A/C compressor
G. Water pump
H. Generator
I. Tension pulley
J. Valve mechanism
K. Valves

Use the Chart Below to Help You Find the Cause of the Symptom

INFOID:0000000001702473

1. Locate the area where noise occurs.
2. Confirm the type of noise.
3. Specify the operating condition of engine.
4. Check specified noise source.

If necessary, repair or replace these parts.

Location of noise	Type of noise	Operating condition of engine						Source of noise	Check item	Reference page
		Before warm-up	After warm-up	When starting	When idling	When racing	While driving			
Top of engine Rocker cover Cylinder head	Ticking or clicking	C	A	—	A	B	—	Tappet noise	Valve clearance	EM-104
	Rattle	C	A	—	A	B	C	Camshaft bearing noise	Camshaft journal oil clearance Camshaft runout	EM-47 EM-47
Crankshaft pulley Cylinder block (Side of engine) Oil pan	Slap or knock	—	A	—	B	B	—	Piston pin noise	Piston to piston pin oil clearance Connecting rod bushing oil clearance	EM-93 EM-93
	Slap or rap	A	—	—	B	B	A	Piston slap noise	Piston to cylinder bore clearance Piston ring side clearance Piston ring end gap Connecting rod bend and torsion	EM-93 EM-93 EM-93 EM-93
	Knock	A	B	C	B	B	B	Connecting rod bearing noise	Connecting rod bushing oil clearance Connecting rod bearing oil clearance	EM-93 EM-93
	Knock	A	B	—	A	B	C	Main bearing noise	Main bearing oil clearance Crankshaft runout	EM-93 EM-93
Front of engine Front cover	Tapping or ticking	A	A	—	B	B	B	Timing chain and chain tensioner noise	Timing chain cracks and wear Timing chain tensioner operation	EM-38
Front of engine	Squeaking or fizzing	A	B	—	B	—	C	Drive belt (Sticking or slipping)	Drive belt deflection	EM-13
	Creaking	A	B	A	B	A	B	Drive belt (Slipping)	Idler pulley bearing operation	
	Squall Creak	A	B	—	B	A	B	Water pump noise	Water pump operation	CO-16

A: Closely related B: Related C: Sometimes related —: Not related

DRIVE BELTS

Component

INFOID:0000000001702474

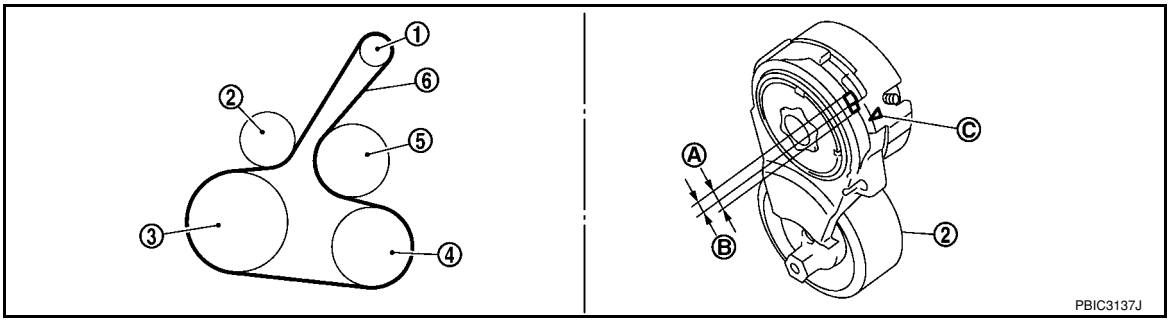

1.	Generator	2.	Drive belt auto–tensioner	3.	Crankshaft pulley
4.	A/C compressor (models with A/C) Idler pulley (models without A/C)	5.	Water pump	6.	Drive belt
A.	Possible use range	B.	Range when new drive belt is installed	C.	Indicator

Checking Drive Belts

INFOID:0000000001702475

WARNING:
Be sure to perform this step when the engine is stopped.

- Make sure that the indicator (notch on fixed side) of drive belt auto-tensioner is within the possible use range (A).
  NOTE:
  - Check the drive belt auto-tensioner indication when the engine is cold.
  - When new drive belt is installed, the indicator (notch on fixed side) should be within the range (B).
- Visually check entire drive belt for wear, damage or cracks.
- If the indicator (notch on fixed side) is out of the possible use range or belt is damaged, replace drive belt.

Tension Adjustment

INFOID:0000000001702476

Belt tension is not necessary, as it is automatically adjusted by drive belt auto-tensioner.

Removal and Installation

INFOID:0000000001702477

REMOVAL

1. Hold the hexagonal part (A) of drive belt auto-tensioner (1) with a wrench securely. Then move the wrench handle in the direction of arrow (loosening direction of tensioner).
   CAUTION:
   Never place hand in a location where pinching may occur if the holding tool accidentally comes off.
2. Insert a rod such as short-length screwdriver approximately 6 mm (0.24 in) in diameter into the hole (B) of the retaining boss to fix drive belt auto-tensioner.
3. Remove drive belt.

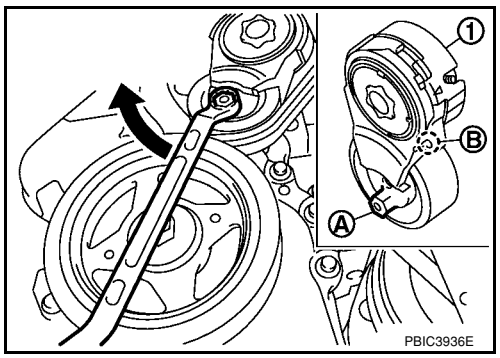

INSTALLATION

1. Hold the hexagonal part (A) of drive belt auto-tensioner (1) with a box wrench securely. Then move the wrench handle in the direction of arrow (loosening direction of tensioner).
   CAUTION:
   Never place hand in a location where pinching may occur if the holding tool accidentally comes off.
2. Insert a rod such as short-length screwdriver approximately 6 mm (0.24 in) in diameter into the hole (B) of retaining boss to fix drive belt auto-tensioner.
3. Install drive belt.
   CAUTION:
   - **Confirm drive belt is completely set to pulleys.**
   - **Check for engine oil, working fluid and engine coolant are not adhered to drive belt and each pulley groove.**
4. Release drive belt auto-tensioner, and apply tension to drive belt.
5. Turn crankshaft pulley clockwise several times to equalize tension between each pulley.
6. Confirm tension of drive belt at indicator (notch on fixed side) is within the possible use range. Refer to EM-13, "Checking Drive Belts".

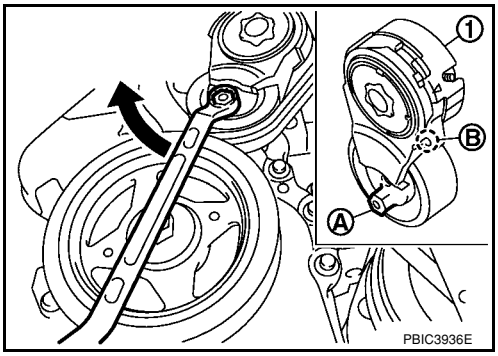

Component

INFOID:0000000001702478

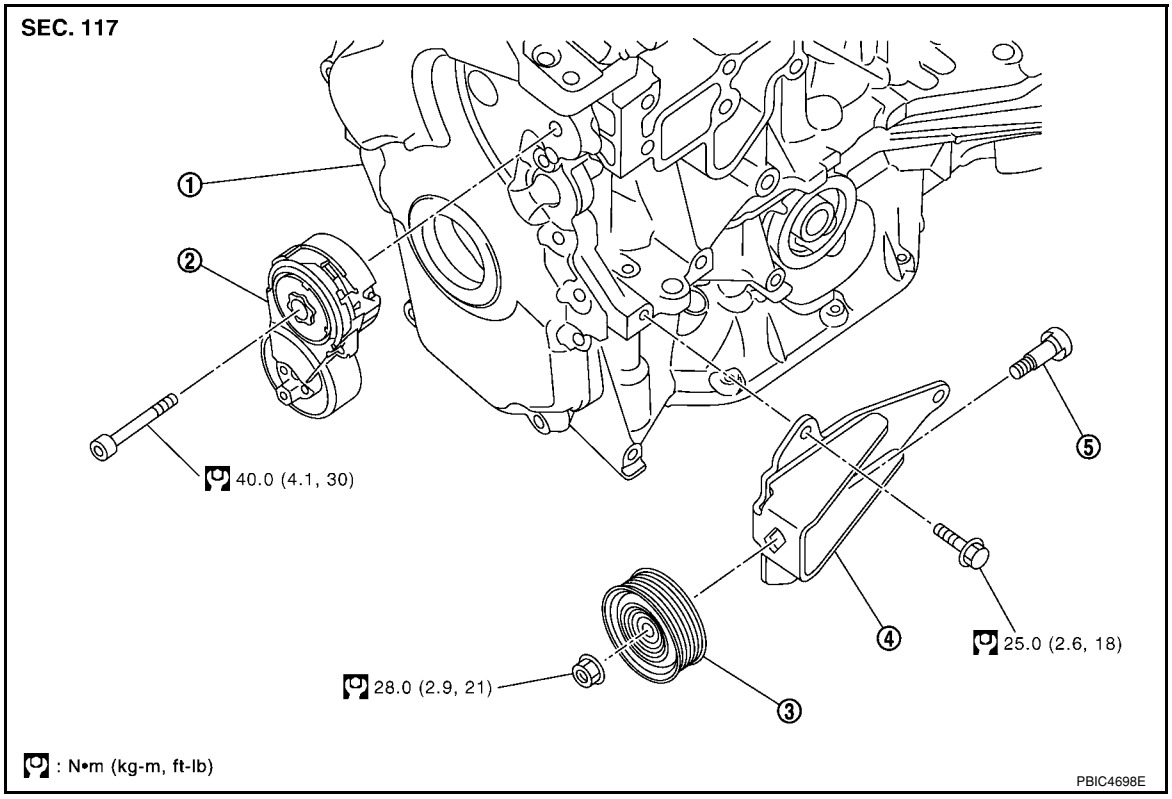

1. Front cover
2. Drive belt auto–tensioner
3. Idler pulley (models without A/C)
4. Bracket (models without A/C)
5. Shaft (models without A/C)

Removal and Installation of Drive Belt Auto Tensioner

INFOID:0000000001702479

REMOVAL

1. Remove drive belt. Refer to EM-13, "Removal and Installation".
2. Release the fixed drive belt auto-tensioner pulley.
3. Loosen bolt and remove drive belt auto-tensioner.
   NOTE:

Use TORX socket (size T50).

4. Remove idler pulley and bracket (models without A/C).

INSTALLATION

Installation is the reverse order of removal.

CAUTION:

- **When installing drive belt auto-tensioner, be careful not to interfere with water pump pulley.**
- **If there is damage greater than peeled paint, replace drive belt auto-tensioner and/or idler pulley.**

AIR CLEANER AND AIR DUCT

Component

INFOID:0000000001702480

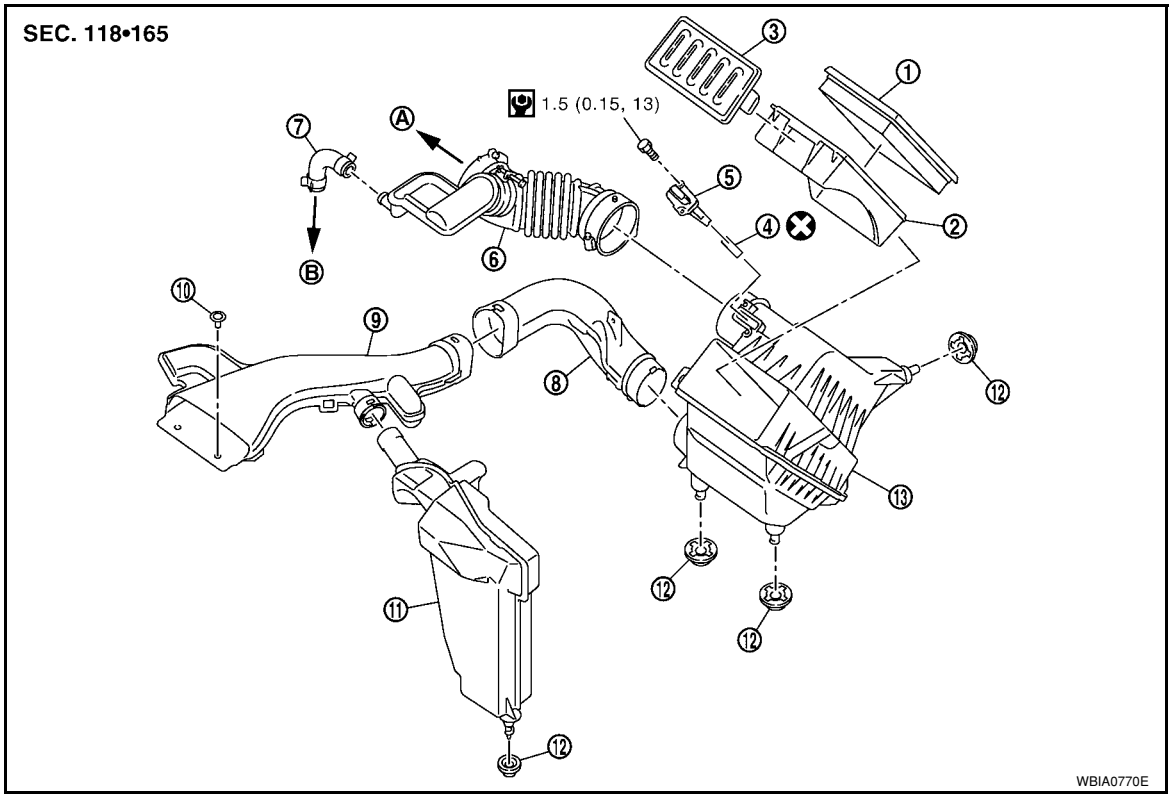

1.	Air cleaner filter	2.	Holder	3.	Air cleaner cover
4.	Seal	5.	Mass air flow sensor	6.	Air duct
7.	PCV hose	8.	Air duct (Inlet)	9.	Air duct (Front)
10.	Clip	11.	Resonator	12.	Grommet
13.	Air cleaner case	A.	To electronic throttle control actuator	B.	To rocker cover

Removal and Installation

INFOID:0000000001702481

REMOVAL

1. Remove the air duct (inlet).
2. Remove the air cleaner filter from the air cleaner case. Refer to EM-17, "Changing Air Cleaner Filter".
3. Remove the air duct [between air duct (inlet) and air cleaner case] from the air cleaner case.
4. Remove the PCV hose.
5. Remove the air duct (between air cleaner case and electronic throttle control actuator).
   - Add marks as necessary for easier installation.
6. Remove air cleaner case with the following procedure.

a. Remove battery. Refer to SC-4.

b. Disconnect harness connector from mass air flow sensor.

c. Remove the air cleaner case.

7. Remove the mass air flow sensor from the air cleaner case, if necessary.
   CAUTION:
   - **Handle it carefully and avoid impacts.**
   - **Do not touch sensor part.**

INSTALLATION

Installation is in the reverse order of removal.

- Align marks.
- Attach each joint securely.
- Screw clamps firmly.

Changing Air Cleaner Filter

INFOID:0000000001702482

REMOVAL

1. Push the tabs (A) of both ends of the air cleaner cover (1) into the inside (B).
2. Pull up the air cleaner cover forward (C) and remove it.

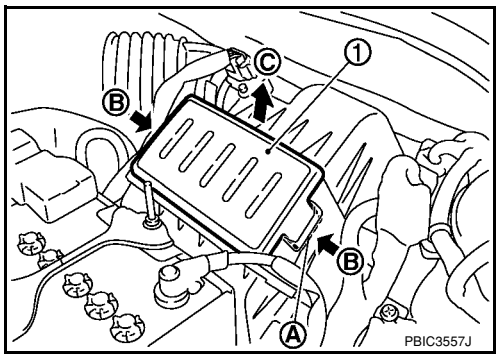

3. Remove the air cleaner filter (1) and holder (2) assembly from the air cleaner case.
4. Remove the air cleaner filter from the holder.

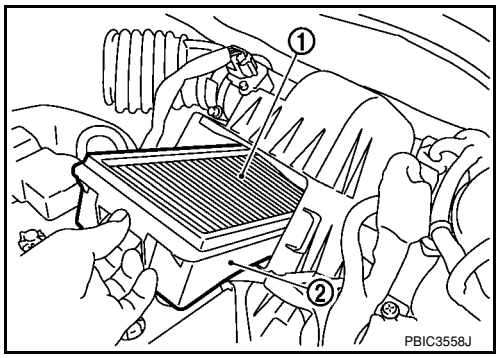

INSPECTION AFTER REMOVAL

It is necessary to replace it at the recommended intervals, more often under dusty driving conditions. Refer to MA-6.

INSTALLATION

Installation is in the reverse order of removal.
- Install the air cleaner cover (1) in the direction shown.
- Air cleaner filter (2)
- Holder (3)

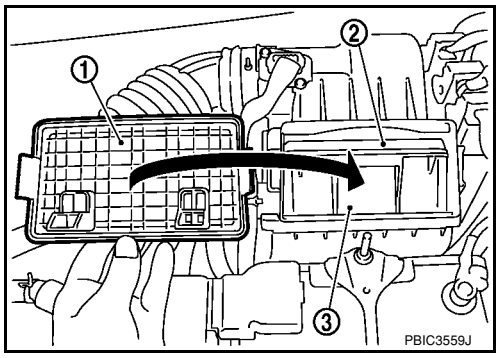

INTAKE MANIFOLD

Component

INFOID:0000000001702483

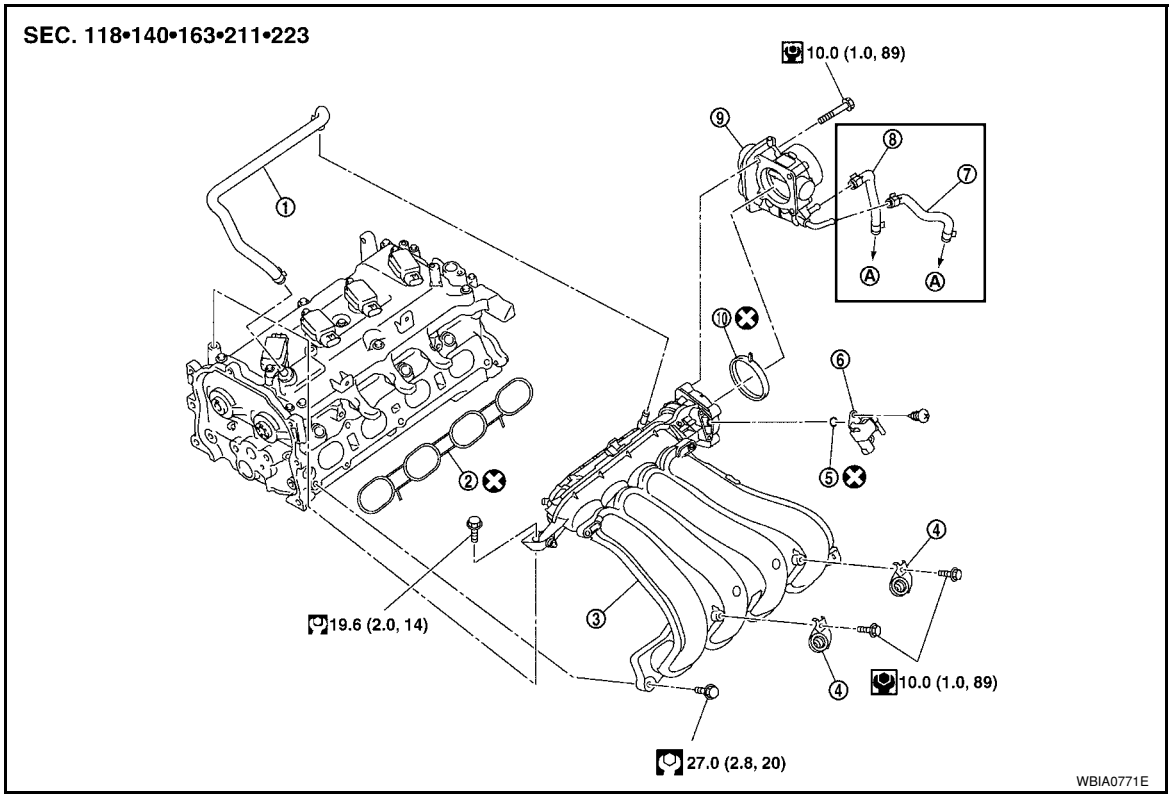

1. PCV hose	2. Gasket	3. Intake manifold
4. Bracket	5. O-ring	6. EVAP canister purge volume control solenoid valve
7. Water hose	8. Water hose	9. Electronic throttle control actuator
10. Gasket	A. To water outlet	

Removal and Installation

INFOID:0000000001702484

REMOVAL

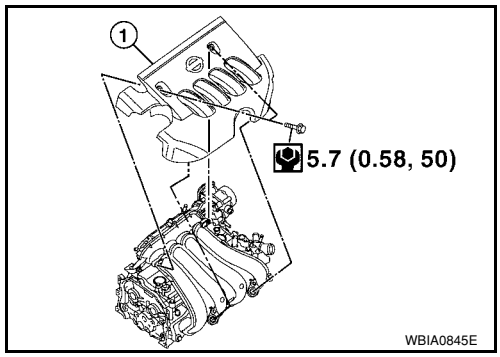

1. Remove engine cover (1).
2. Drain engine coolant. Refer to CO-8, "Changing Engine Coolant".
   CAUTION:
   Perform this step when engine is cold.
   NOTE:
   This step is unnecessary when putting plugs to water hoses (to electronic throttle control actuator)

a. Disconnect water hoses from electronic throttle control actuator.

b. Remove electronic throttle control actuator.
   CAUTION:
   - **Handle carefully to avoid any shock to electronic throttle control actuator.**
   - **Never disassemble.**

3. Remove oil level gauge.
   CAUTION:
   Cover the oil level gauge guide openings to avoid entry of foreign materials.

4. Loosen and remove intake manifold (1) bolts (A) (B).

⇦ : Engine front

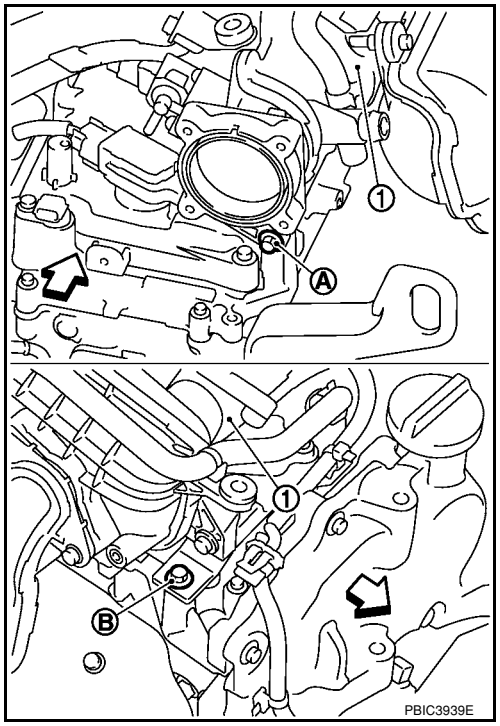

5. Loosen bolts in reverse order as shown.

⇦ : Engine front

CAUTION:
Cover engine openings to avoid entry of foreign materials.

6. Remove EVAP canister purge volume control solenoid valve from intake manifold, if necessary.
CAUTION:
Handle it carefully and avoid impacts.
7. Remove intake manifold.

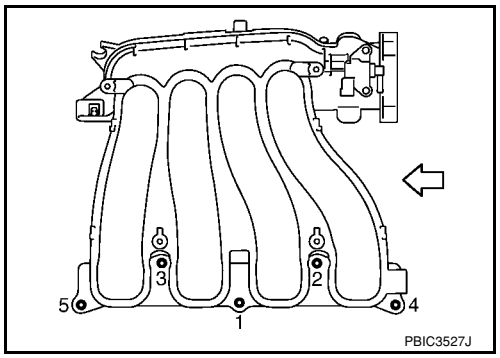

INSTALLATION

1. Install intake manifold.
NOTE:
Be sure the intake manifold gasket is seated correctly in groove of intake manifold.
2. Tighten bolts in numerical order as shown.

⇦ : Engine front

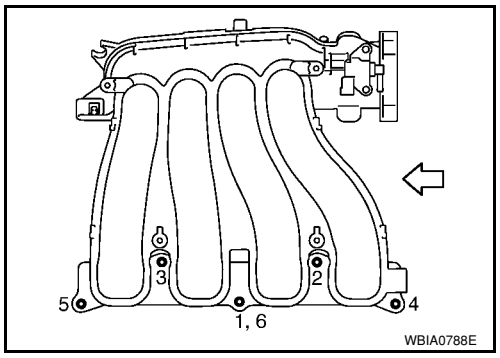

3. Tighten intake manifold bolt (A). Then tighten intake manifold bolt (B).

   1 : Intake manifold
   ⇦ : Engine front

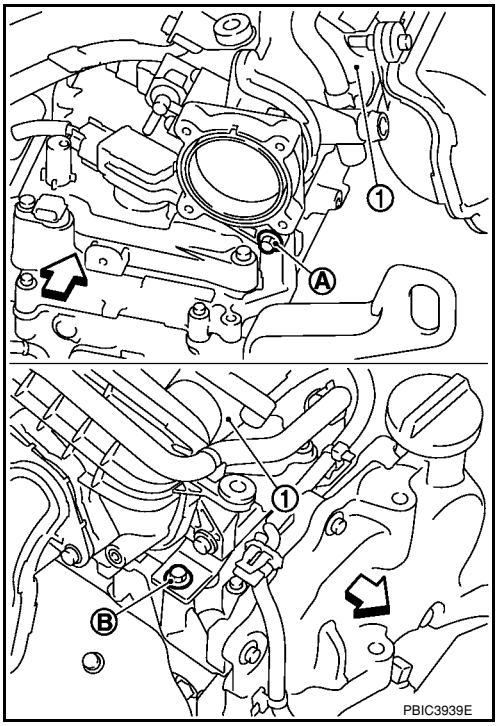

4. Install electronic throttle control actuator
5. Install water hoses (3), (5) to electronic throttle control actuator as shown.

   1 : Electronic throttle control actuator
   2 : Clamp
   4 : Water outlet
   A : Paint Mark
   B : The clamp shall not interfere with the bulged section.

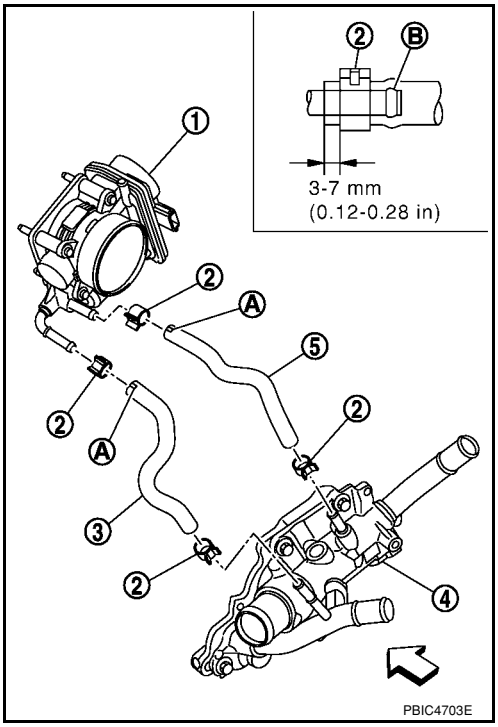

6. Installation of the remaining components is in the reverse order of removal.

INSPECTION AFTER INSTALLATION

- Check for leaks of engine coolant. Refer to CO-8, "Inspection".
- Start and warm up the engine. Visually check for engine coolant leaks.

EXHAUST MANIFOLD

Component

INFOID:0000000001702485

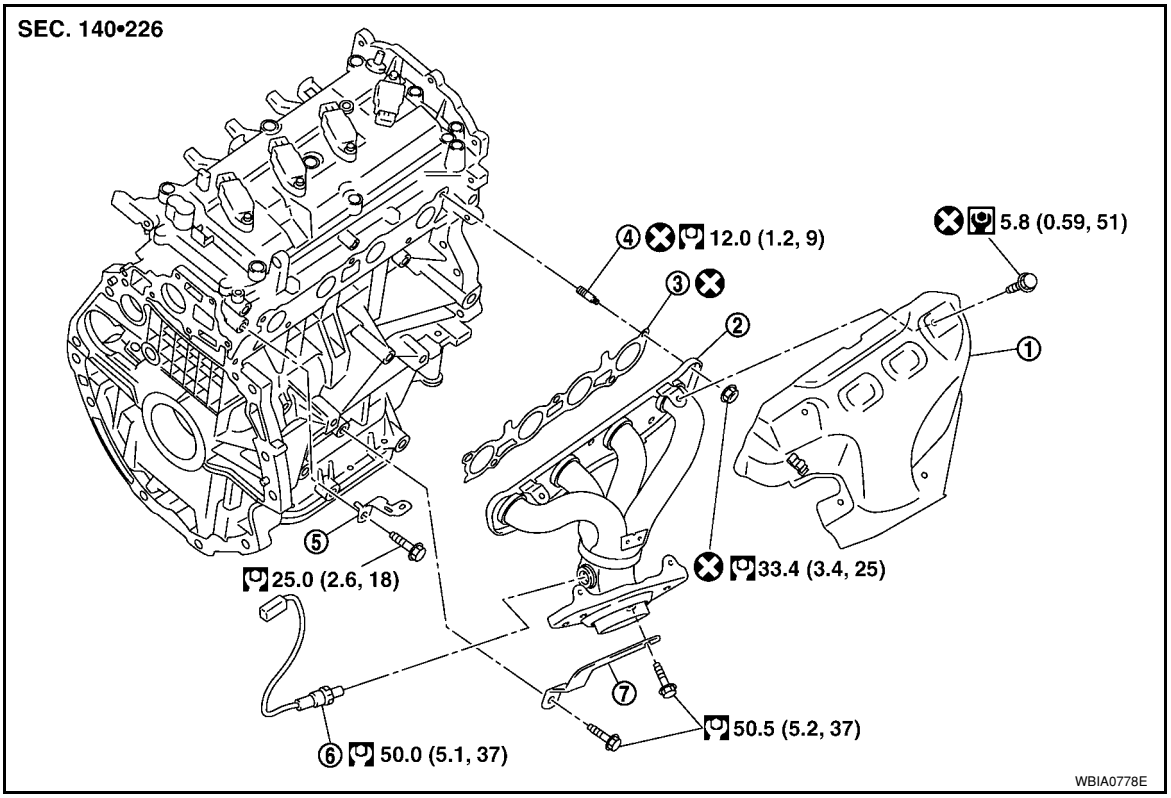

1. Exhaust manifold cover
2. Exhaust manifold
3. Gasket
4. Stud bolt
5. Bracket
6. A/F ratio sensor 1
7. Exhaust manifold stay

⇦ Engine front

Removal and Installation

INFOID:0000000001702486

REMOVAL

1. Remove exhaust front tube. Refer to EX-4, "Removal and Installation".
2. Remove exhaust manifold cover.
3. Remove the A/F sensor 1, using Tool (A).

Tool number :KV991J0050 (J-44626)

CAUTION:
Handle it carefully and avoid impacts.

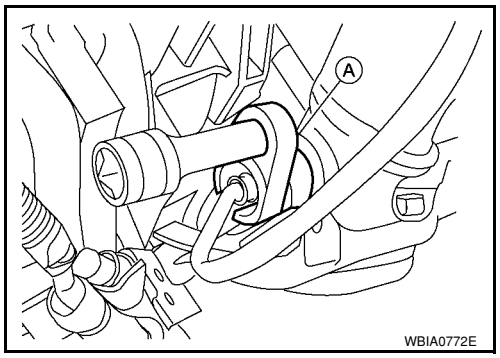

4. Remove exhaust manifold side bolt of exhaust manifold stay.

5. Loosen nuts in reverse order as shown and remove exhaust manifold.

   ⇦ : Engine front

   CAUTION:
   Cover engine openings to avoid entry of foreign materials.

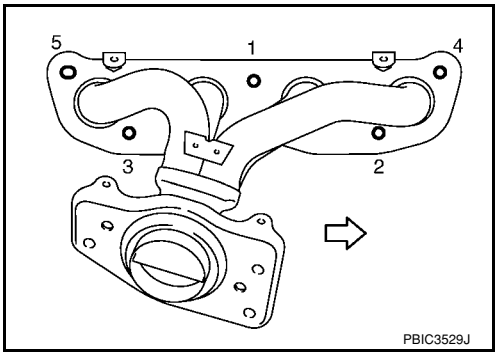

INSPECTION AFTER REMOVAL

Surface Distortion

- Using straightedge (B) and feeler gauge (A), check the surface distortion of exhaust manifold mating surface in each exhaust port and entire part.

  Limit:

Each exhaust port	**: 0.3 mm (0.012 in)**
Entire part	**: 0.7 mm (0.028 in)**

- If it exceeds the limit, replace exhaust manifold.

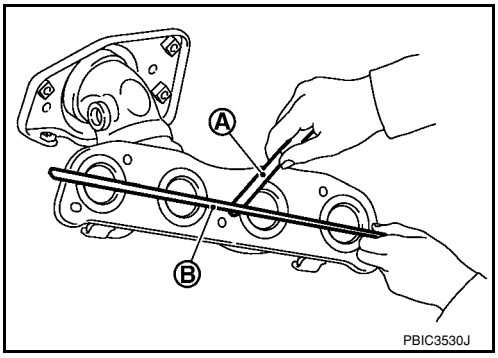

INSTALLATION

1. Install exhaust manifold gasket to cylinder head as shown.

   ⇦ : Engine front

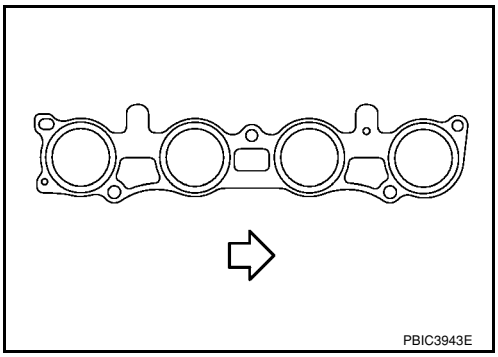

2. Tighten exhaust manifold nuts to specification in two stages in the numerical order as shown.

   ⇦ : Engine front

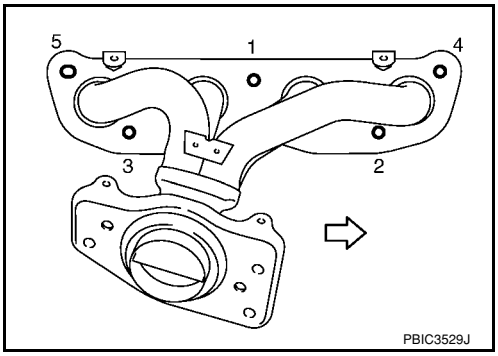

3. Install exhaust manifold stay (2) in the direction as shown.

1 : Exhaust manifold
A : Upper mark
⇦ : Engine front

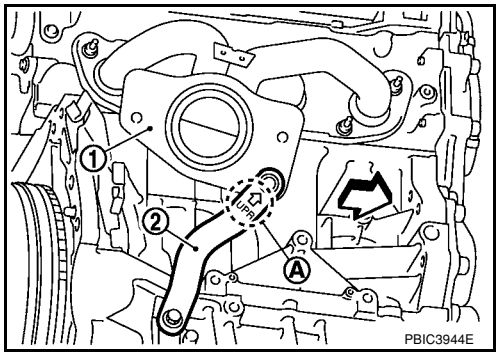

4. Install the A/F ratio sensor 1, using Tool

Tool number : KV991J0050 (J-44626)

CAUTION:
- **Handle it carefully and avoid impacts.**
- **Before installing a new A/F ratio sensor, clean the exhaust tube threads using suitable tool and approved anti-seize lubricant.**
- **Do not over-tighten the A/F ratio sensor. Doing so may damage the A/F ratio sensor, resulting in the MIL coming on.**

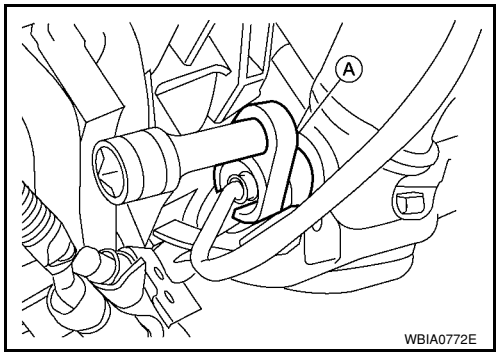

Tool number : — (J-43897-12)
Tool number : — (J-43897-18)

5. Installation of the remaining parts is in the reverse order of removal.

OIL PAN

Component

INFOID:0000000001702487

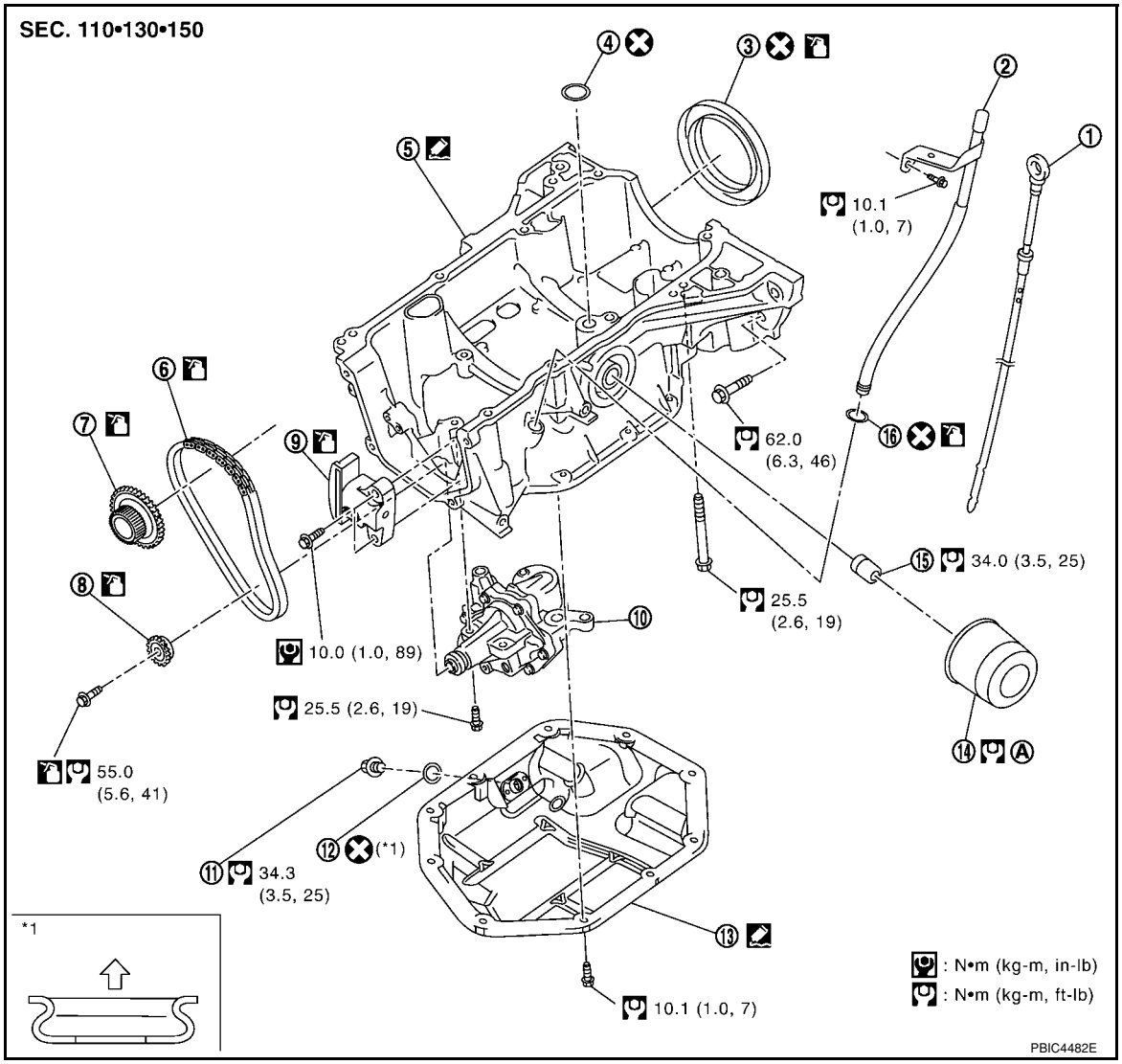

1.	Oil level gauge	2.	Oil level gauge guide	3.	Rear oil seal
4.	O-ring	5.	Oil pan (upper)	6.	Oil pump drive chain
7.	Crankshaft sprocket	8.	Oil pump sprocket	9.	Timing chain tensioner (for oil pump)
10.	Oil pump	11.	Drain plug	12.	Drain plug washer
13.	Oil pan (lower)	14.	Oil filter	15.	Connector bolt
16.	O-ring				

A. Refer to EM-24

⇦ : Oil pan side

Removal and Installation

INFOID:0000000001702488

REMOVAL

WARNING:

- **Be careful not to burn yourself, as the engine oil is hot.**
- **Prolonged and repeated contact with used engine oil may cause skin cancer; try to avoid direct skin contact with used oil. If skin contact is made, wash thoroughly with soap or hand cleaner as soon as possible.**

1. Drain engine oil. Refer to LU-6.
2. Remove engine and transaxle assembly. Refer to EM-72.
3. Remove oil filter using Tool.

Tool number : KV10115801 (—)

CAUTION:
When removing, prepare a shop cloth to absorb any engine oil leakage or spillage.

4. Remove oil pan (lower) bolts in reverse order as shown.

⇦ : Engine front

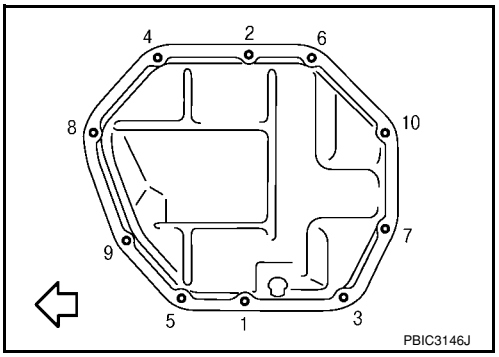

5. After removing the bolts and nuts, separate the mating surface and remove the sealant using Tool.

Tool number : KV10111100 (J-37228)

CAUTION:
Be careful not to damage the mating surfaces.

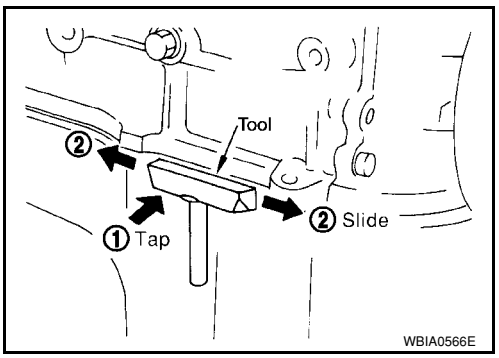

6. Remove the following parts:
   - Flywheel (M/T models) or drive plate (A/T or CVT models); Refer to EM-76.
   - Front cover, timing chain, oil pump drive chain; Refer to EM-37.
7. Remove oil pump.
   - Loosen bolts in reverse order as shown.

1 : Oil pump
2 : Oil pan (upper)
⇦ : Engine front

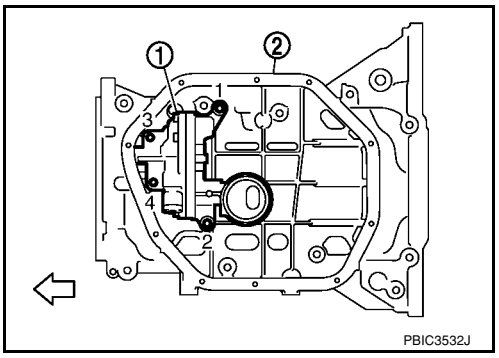

8. Remove oil pan (lower) bolts in reverse order as shown.

⇦ : Engine front

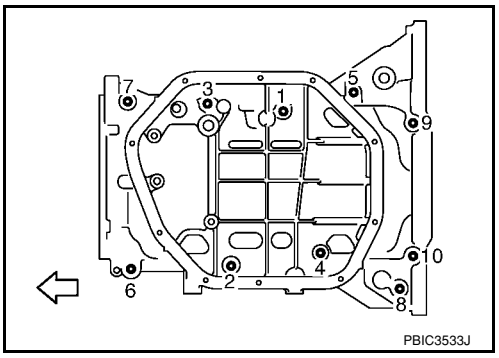

9. Insert a screwdriver shown by the arrow (⬅) and open up a crack between oil pan (upper) and cylinder block.

   ⇦ : Engine front

   CAUTION:
   A more adhesive liquid gasket is applied compared to previous types when shipped, so it should not be forced off the position not specified.

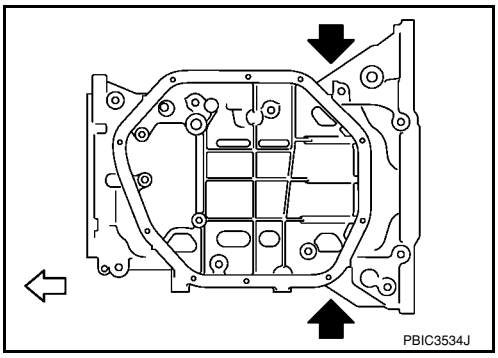

10. After removing the bolts, separate the mating surface and remove the sealant using Tool.

    Tool number : KV10111100 (J-37228)

    - Slide (1) the Tool by tapping (2) its side with a hammer to remove the lower oil pan from the upper oil pan.

    CAUTION:
    Be careful not to damage the mating surfaces.

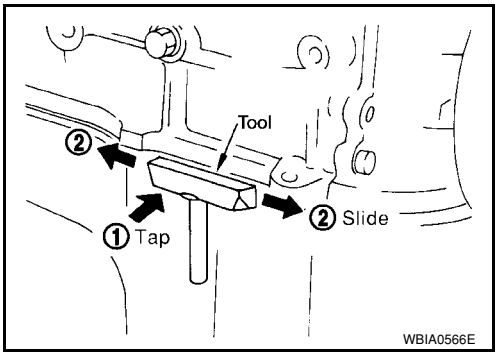

11. Remove O-ring between cylinder block and oil pan (upper).

INSPECTION AFTER REMOVAL

Oil Filter

Clean oil strainer portion (part of the oil pump) if any object attached.

INSTALLATION

1. Use a scraper (A) to remove old liquid gasket from mating surfaces.
   - Remove the old liquid gasket from mating surface of cylinder block.
   - Remove old liquid gasket from the bolt holes and threads.

   CAUTION:
   Never scratch or damage the mating surfaces when cleaning off old liquid gasket.

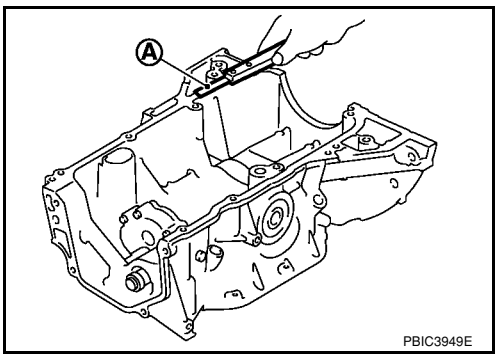

2. Apply the sealant without breaks to the specified location using Tool.
Use Genuine Silicone RTV Sealant or equivalent. Refer to GI-42, "Recommended Chemical Product and Sealant".

Tool number WS39930000 (–)

1 : Oil pan (upper)
A : 2 mm protruded to outside
B : 2 mm protruded to rear oil seal mounting side
⇦ : Engine front
⬅ : Engine outside

CAUTION:
Apply liquid gasket to outside of bolt hole for the positions shown by ▲ marks.

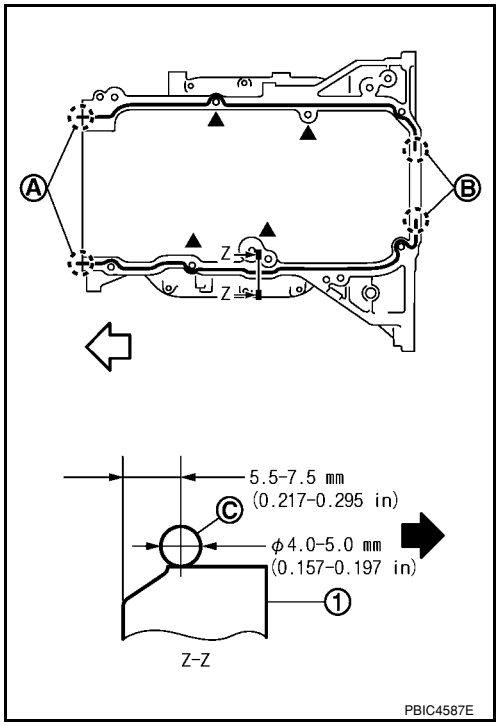

3. Install new O-ring at cylinder block side.
CAUTION:
Install avoiding misalignment of O-ring.
4. Tighten bolts in numerical order as shown.

⇦ : Engine front

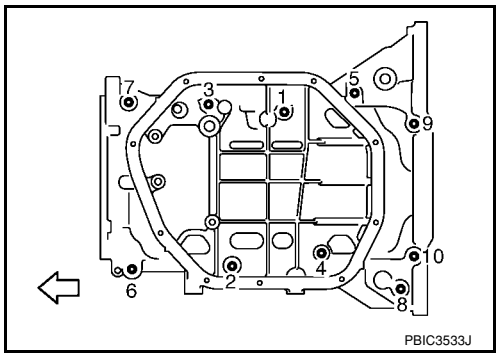

5. Install rear oil seal with the following procedure.
CAUTION:
- **The installation of rear oil seal should be completed within 5 minutes after installing oil pan (upper).**
- **Always replace rear oil seal with new one.**
- **Never touch oil seal lip.**

a. Wipe off liquid gasket protruding to the rear oil seal mating part of oil pan (upper) and cylinder block using a scraper.
b. Apply engine oil to entire outside area of rear oil seal.

c. Press-fit the rear oil seal using a drift with outer diameter 115 mm (4.53 in) and inner diameter 90 mm (3.54 in) (A) (commercial service tool).

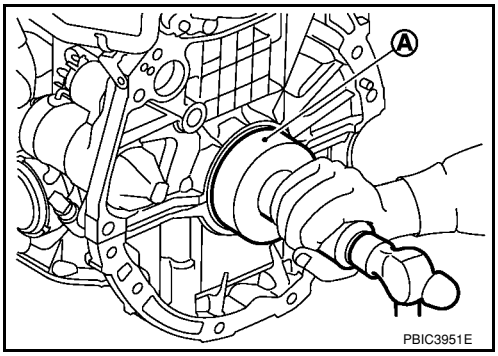

- Press-fit to the specified dimensions as shown.

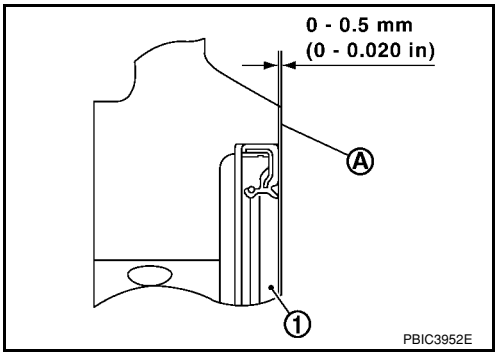

1 : Rear oil seal
A : Cylinder block rear end surface

CAUTION:
- **Never touch the grease applied to the oil seal lip.**
- **Be careful not to damage the rear oil seal mounting part of oil pan (upper) and cylinder block or the crankshaft.**
- **Press-fit straight, making sure that rear oil seal does not curl or tilt.**

NOTE:
The standard surface of the dimension is the rear end surface of cylinder block.

6. Install oil pump.
   - Tighten bolts in numerical order as shown.

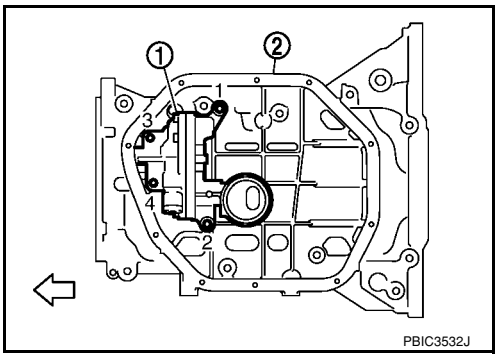

1 : Oil pump
2 : Oil pan (upper)
⇦ : Engine front

7. Install oil pump sprocket, oil pump drive chain and other related parts if removed.

8. Use a scraper (A) to remove old liquid gasket from mating surfaces.
   - Also remove old liquid gasket from mating surface of oil pan (upper).
   - Remove old liquid gasket from the bolt holes and threads.

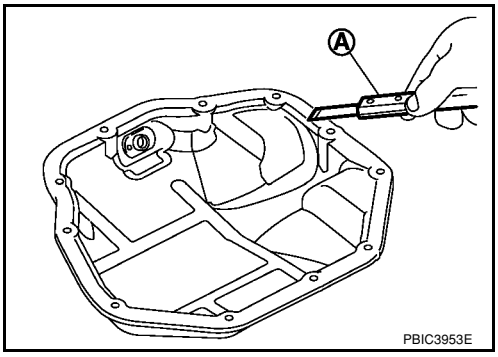

9. Apply the sealant without breaks to the specified location using Tool.
Use Genuine Silicone RTV Sealant or equivalent. Refer to GI-42, "Recommended Chemical Product and Sealant".

Tool number WS39930000 (–)

1 : Oil pan (lower)
⬅ : Engine outside

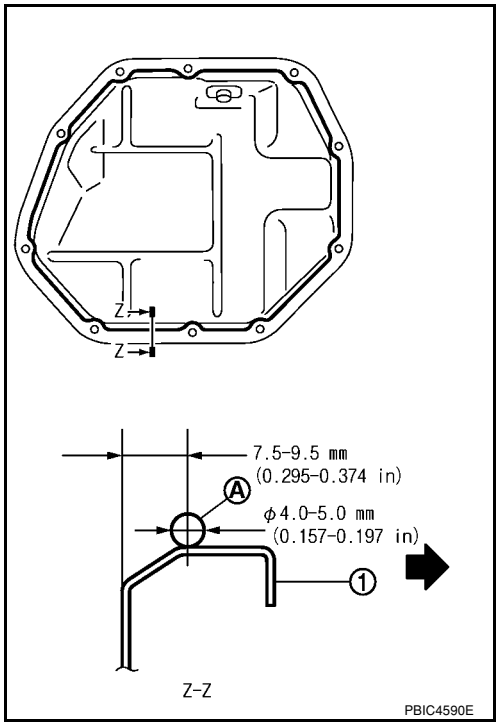

10. Tighten bolts in numerical order as shown.

⇦ : Engine front

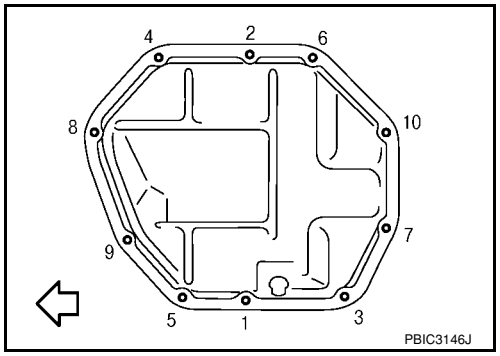

11. Install oil filter with the following procedure:
a. Remove foreign materials adhering to the oil filter installation surface.
b. Apply new engine oil to the oil seal contact surface of new oil filter.
c. Screw oil filter manually until it touches the installation surface, then tighten it by 2/3 turn. Or tighten to specification.

Oil filter: : 17.7 N·m (1.8 kg-m, 13 ft-lb)

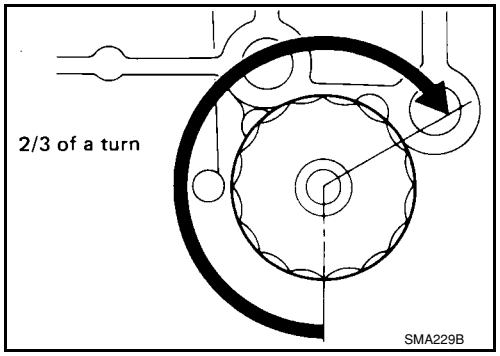

12. Installation of the remaining components is in the reverse order of removal.

IGNITION COIL, SPARK PLUG AND ROCKER COVER

Component

INFOID:0000000001702489

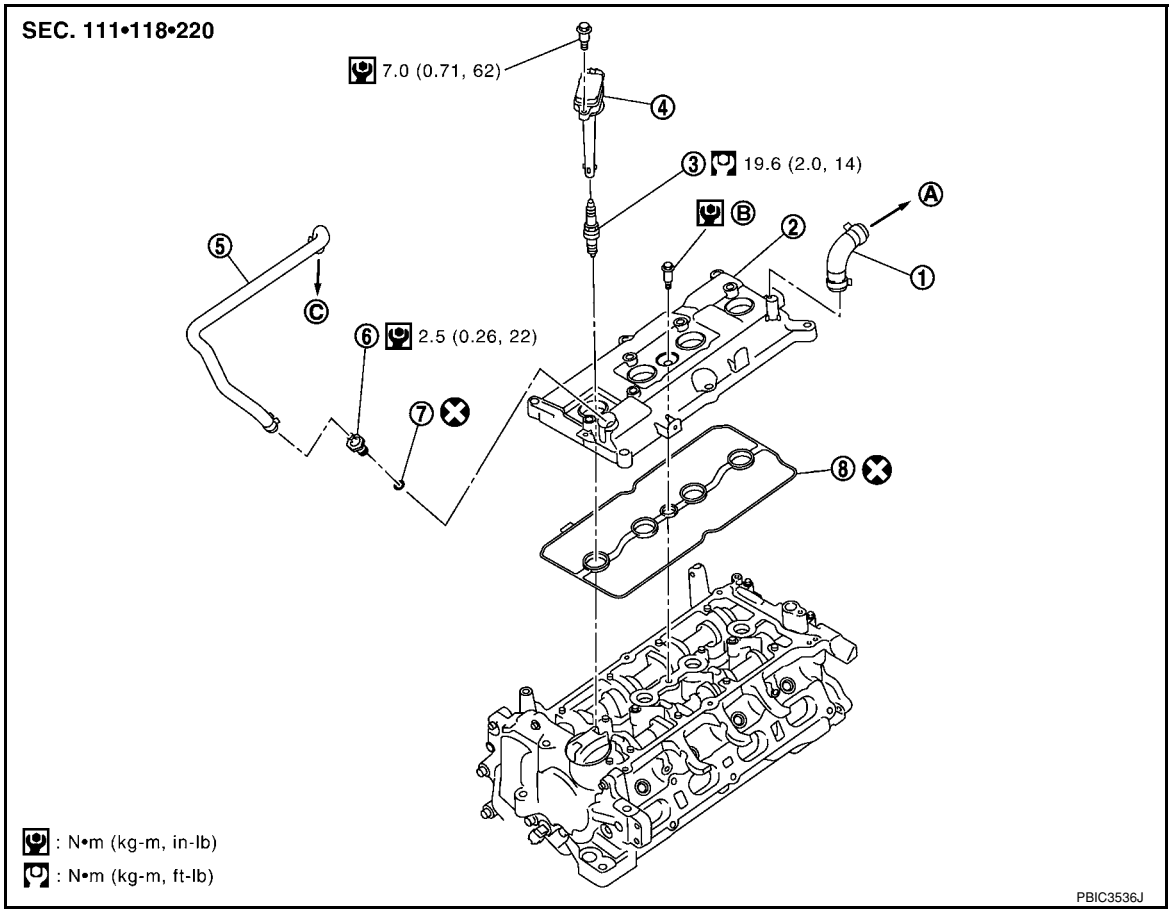

1. PCV hose	2. Rocker cover	3. Spark plug
4. Ignition coil	5. PCV hose	6. PCV valve
7. O-ring	8. Gasket	
A. To air duct	B. Refer to EM-30.	C. To intake manifold

Removal and Installation

INFOID:0000000001702490

REMOVAL

1. Remove intake manifold. Refer to EM-18.
2. Remove ignition coil.
   CAUTION:
   - **Handle it carefully and avoid impacts.**
   - **Never disassemble.**

3. Remove spark plug using suitable tool.
   CAUTION:
   Never drop or shock it.

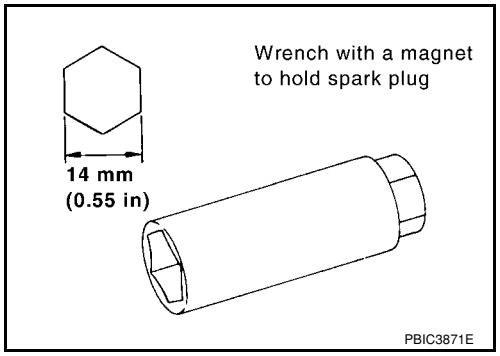

4. Remove rocker cover.
   - Loosen bolts in reverse order as shown.
   - ⇦ Engine front

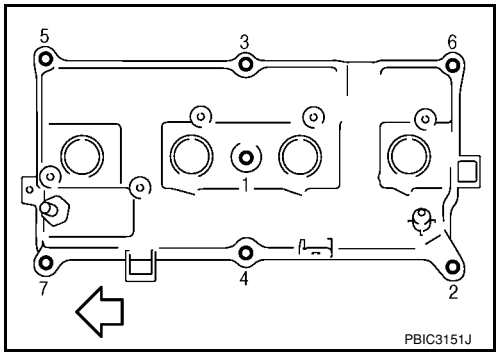

INSPECTION AFTER REMOVAL

CAUTION:
- **Never drop or shock spark plug.**
- **Checking and adjusting spark plug gap is not required between change intervals.**

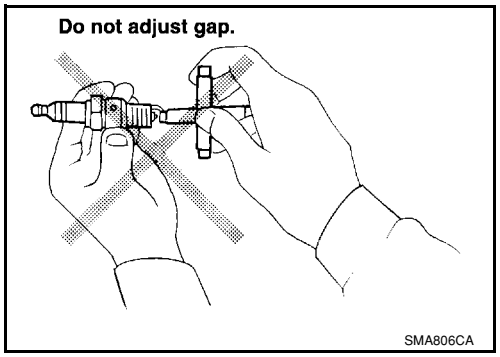

- **If spark plug tip is covered with carbon, a spark plug cleaner may be used.**

Cleaner air pressure	**: Less than 588 kPa (5.88 bar, 6 kg/cm^2, 85 psi)**
Cleaning time	**: Less than 20 seconds**

- **Never use wire brush for cleaning spark plug.**

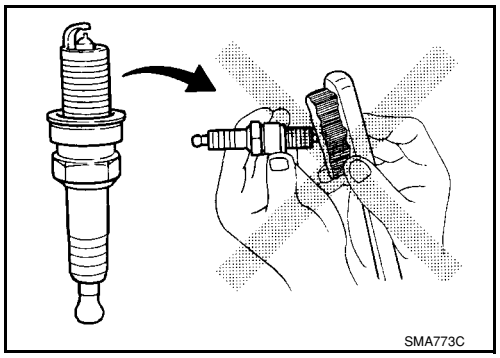

INSTALLATION

1. Install rocker cover gasket to rocker cover.

2. Install rocker cover.
   - Tighten bolts in two steps separately in numerical order as shown.

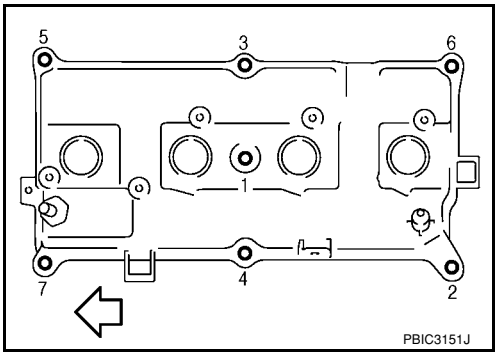

1st step	**: 1.96 N·m (0.20 kg-m, 17 in-lb)**
2nd step	**: 8.33 N·m (0.85 kg-m, 73 in-lb)**

   - ⇦ Engine front

CAUTION:
Check if rocker cover gasket is not dropped from the installation groove of rocker cover.

3. Install spark plug using suitable tool.

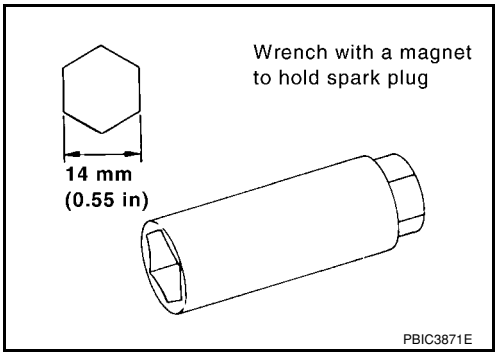

Plug type	**: Iridium tipped**
Make	**: DENSO**
Part number	**: FXE20HR11**
Gap (nominal)	**: 1.1 mm (0.043 in)**

CAUTION:
Never drop or shock it.

4. Install ignition coil.

CAUTION:
- **Handle it carefully and avoid impacts.**
- **Never disassemble.**

5. Install intake manifold. Refer to EM-18.

FUEL INJECTOR AND FUEL TUBE

Component

INFOID:0000000001702491

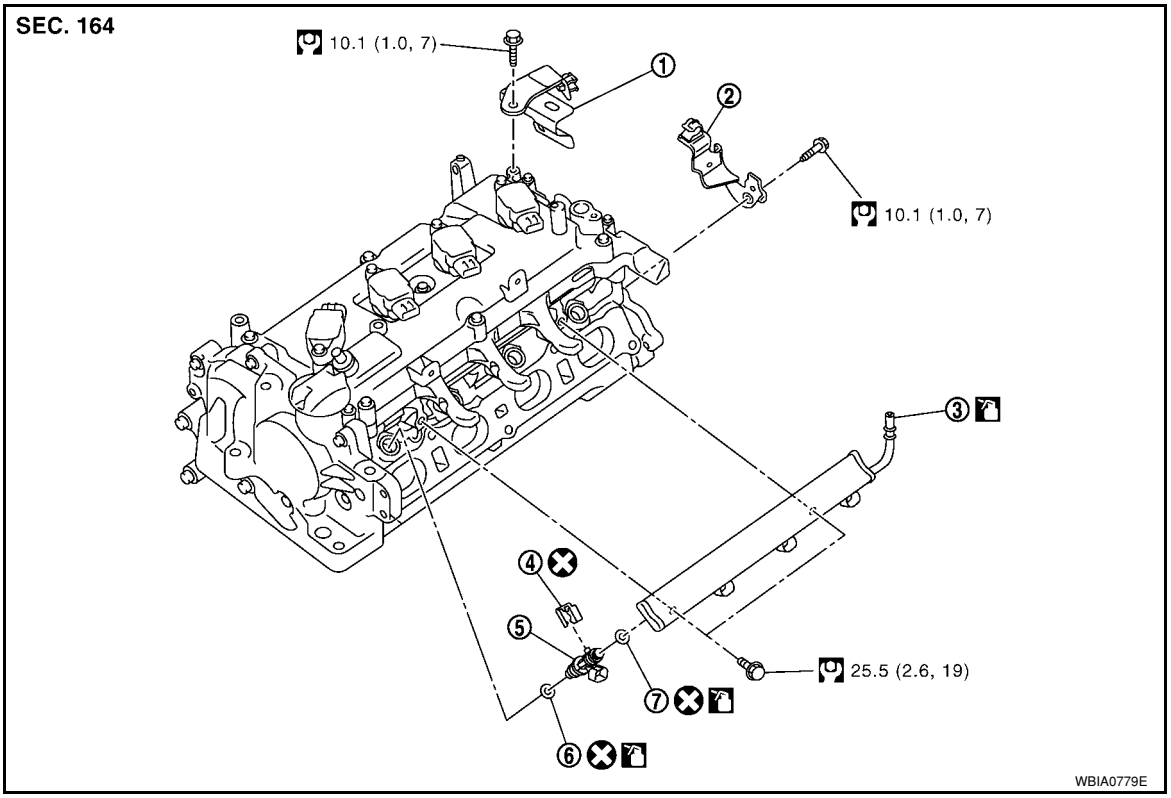

1. Bracket
2. Bracket
3. Fuel tube
4. Clip
5. Fuel injector
6. O-ring (green)
7. O-ring (black)

Removal and Installation

INFOID:0000000001702492

REMOVAL

WARNING:

- **Put a "CAUTION: FLAMMABLE" sign in the workshop.**
- **Be sure to work in a well ventilated area and furnish workshop with a CO_2 fire extinguisher.**
- **Do not smoke while servicing fuel system. Keep open flames and sparks away from the work area.**

1. Release the fuel pressure. Refer to EC-78, "Fuel Pressure Check".
2. Remove quick connector cap (1) from quick connector connection.

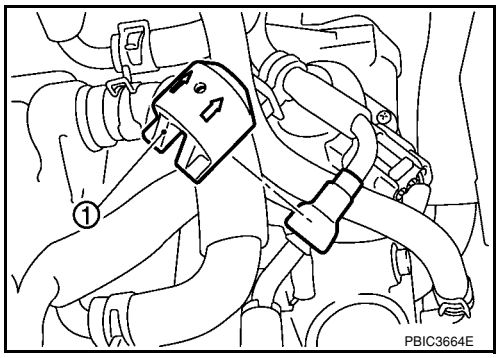

3. Disconnect fuel feed hose from hose clamp.

   1 : Quick connector cap

   NOTE:
   There is no fuel return path.

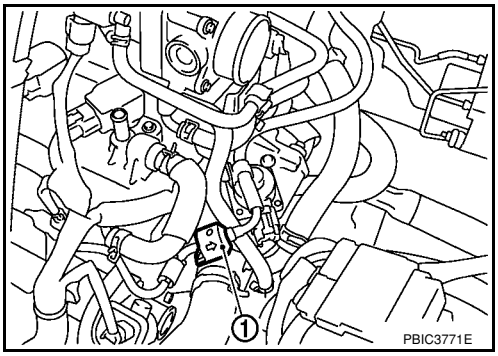

4. With the sleeve side of quick connector release facing quick connector, install quick connector release onto fuel tube.

5. Insert quick connector release into quick connector until sleeve contacts and goes no further. Hold quick connector release on that position.
   CAUTION:
   Inserting quick connector release hard will not disconnect quick connector. Hold quick connector release where it contacts and goes no further.

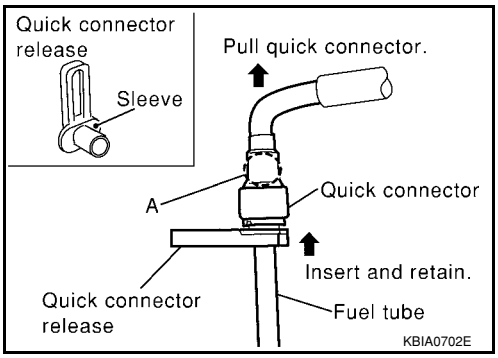

6. Draw and pull out quick connector straight from fuel tube.
   CAUTION:
   - **Pull quick connector holding "A" position.**
   - **Do not pull with lateral force applied. O-ring inside quick connector may be damaged.**
   - **Prepare container and cloth beforehand as fuel will leak out.**
   - **Avoid fire and sparks.**
   - **Keep parts away from heat source. Especially, be careful when welding is performed around them.**
   - **Do not expose parts to battery electrolyte or other acids.**
   - **Do not bend or twist connection between quick connector and fuel feed hose during installation/removal.**
   - **To keep clean the connecting portion and to avoid damage and foreign materials, cover them completely with plastic bags or something similar.**

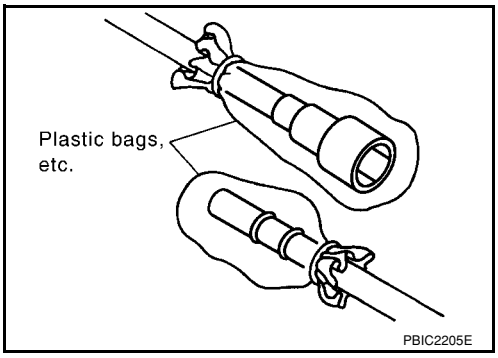

7. Remove intake manifold. Refer to EM-18.

8. Remove fuel tube.
   - Loosen bolts in reverse order as shown.

   ⇦ : Engine front

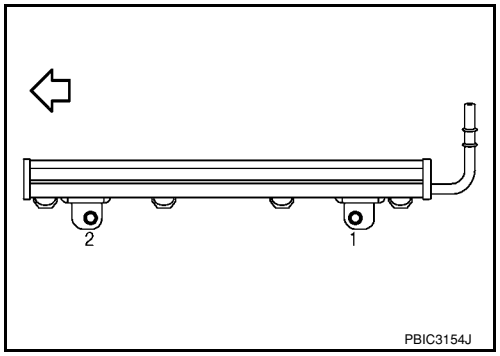

9. Remove the fuel tube and fuel injector assembly.
   CAUTION:
   - **When removing, be careful to avoid any interference with fuel injector.**
   - **Use a shop cloth to absorb any fuel leaks from fuel tube.**
10. Remove fuel injector from fuel tube with the following procedure:

a. Open and remove clip.

b. Remove fuel injector from fuel tube by pulling straight.
   CAUTION:
   - **Be careful with remaining fuel that may go out from fuel tube.**
   - **Be careful not to damage fuel injector nozzle during removal.**
   - **Never bump or drop fuel injector.**
   - **Never disassemble fuel injector.**

INSTALLATION

1. Note the following, and install O-rings to fuel injector.
   CAUTION:
   - **Upper and lower O-rings are different. Be careful not to confuse them.**

Fuel tube side	: Black
Nozzle side	: Green

   - **Handle O-ring with bare hands. Never wear gloves.**
   - **Lubricate O-ring with new engine oil.**
   - **Never clean O-ring with solvent.**
   - **Make sure that O-ring and its mating part are free of foreign material.**
   - **When installing O-ring, be careful not to scratch it with tool or fingernails. Also be careful not to twist or stretch O-ring. If O-ring was stretched while it was being attached, never insert it quickly into fuel tube.**
   - **Insert O-ring straight into fuel tube. Never twist it.**

2. Install fuel injector (4) to fuel tube (1) with the following procedure:

   3 : O–ring (black)
   5 : O–ring (green)

a. Insert clip (2) into clip groove (F) on fuel injector.
   - Insert clip so that protrusion (G) of fuel injector matches cut-out (D) of clip.

   CAUTION:
   - **Never reuse clip. Replace it with a new one.**
   - **Be careful to keep clip from interfering with O-ring. If interference occurs, replace O-ring.**

b. Insert fuel injector into fuel tube with clip attached.
   - Insert it while matching it to the axial center.
   - Insert fuel injector so that protrusion (B) of fuel tube matches cut-out (C) of clip.
   - Make sure that fuel tube flange (A) is securely fixed in flange fixing groove (E) on clip.

c. Make sure that installation is complete by making sure that fuel injector does not rotate or come off.

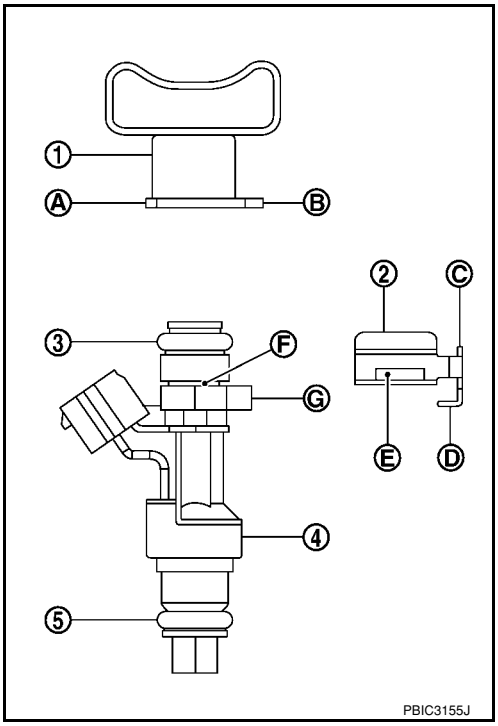

3. Set fuel tube and fuel injector assembly at its position for installation on cylinder head.

   CAUTION:
   For installation, be careful not to interfere with fuel injector nozzle.

4. Tighten bolts in numerical order as shown.

   ⇦ : Engine front

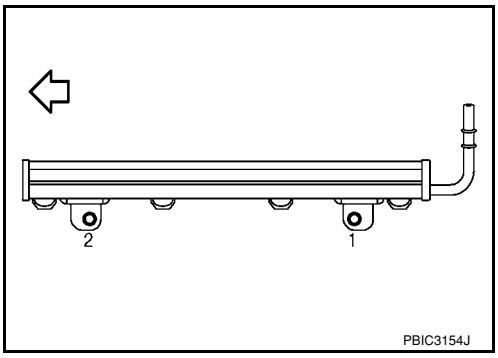

5. Installation of the remaining components is in the reverse order of removal.

TIMING CHAIN

Component

INFOID:0000000001702493

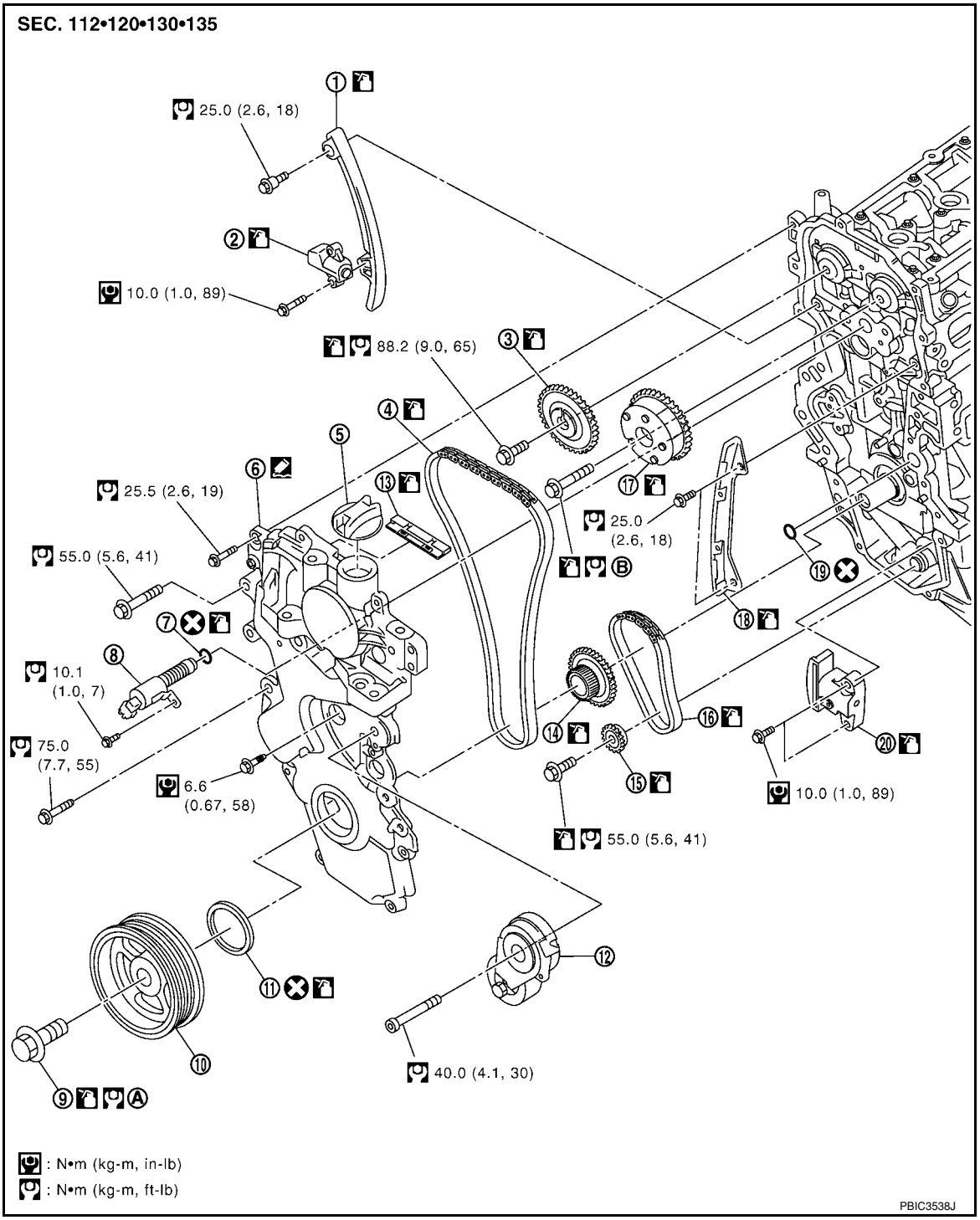

1.	Timing chain slack guide	2.	Timing chain tensioner	3.	Camshaft sprocket (EXH)
4.	Timing chain	5.	Oil filler cap	6.	Front cover
7.	O-ring	8.	Intake valve timing control solenoid valve	9.	Crankshaft pulley bolt
10.	Crankshaft pulley	11.	Front oil seal	12.	Drive belt auto-tensioner
13.	Timing chain tension guide (front cover side)	14.	Crankshaft sprocket	15.	Oil pump sprocket

16. Oil pump drive chain
17. Camshaft sprocket (INT)
18. Timing chain tension guide
19. O-ring
20. Chain tensioner (for oil pump)

A. Refer to EM-38
B. Refer to EM-47

Removal and Installation

INFOID:0000000001844926

CAUTION:
The rotating direction indicated in the text indicates all directions seen from the engine front.

REMOVAL

1. Remove front RH wheel. Refer to WT-6, "Rotation".
2. Remove front fender protector (RH). Refer to EI-23, "Removal and Installation".
3. Drain engine oil. Refer to LU-7, "Changing Engine Oil".
   NOTE:
   Perform this step when engine is cold.
4. Remove the following parts.
   - Rocker cover: Refer to EM-30, "Component".
   - Drive belt: Refer to EM-13, "Removal and Installation".
   - Water pump pulley: Refer to CO-16, "Component".
   - Ground cable (between engine bracket (RH) and radiator core support)
5. Support the bottom surface of engine using a transmission jack, and then remove the engine bracket and insulator (RH). Refer to EM-72, "Component".
6. Set No. 1 cylinder at TDC on its compression stroke with the following procedure:

a. Rotate crankshaft pulley (1) clockwise and align TDC mark (no paint) (B) to timing indicator (A) on front cover.

C : White paint mark (Not use for service)

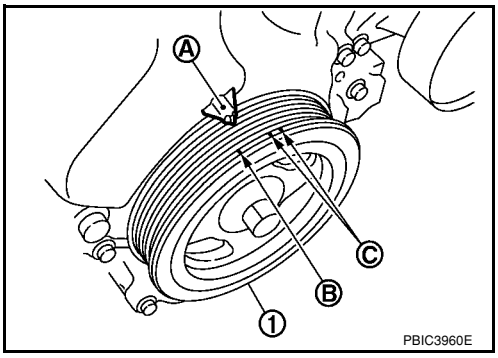

b. At the same time, make sure that the cam noses of the No.1 cylinder are located (⬅) as shown.

1 : Camshaft (INT)
2 : Camshaft (EXH)
⇦ : Engine front

- If not, rotate crankshaft pulley one revolution (360 degrees) and align as shown.

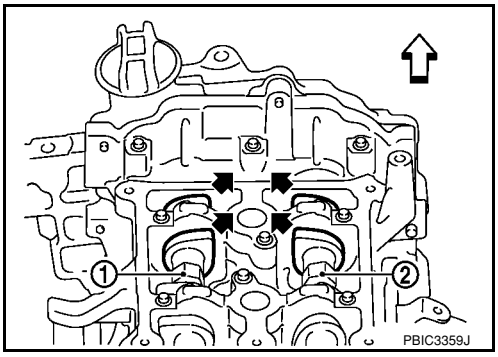

7. Hold crankshaft pulley (1) using suitable tool (A) loosen crankshaft pulley bolt, and locate bolt seating surface at 10 mm (0.39 in) from its original position.
CAUTION:
Never remove the crankshaft pulley bolt as it will be used as a supporting point for the pulley puller.

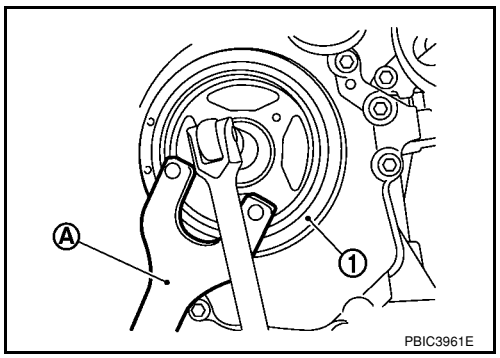

8. Attach a pulley puller (A) in the M6 thread hole on crankshaft pulley (1), and remove crankshaft pulley.

Tool number : KV11103000 (—)

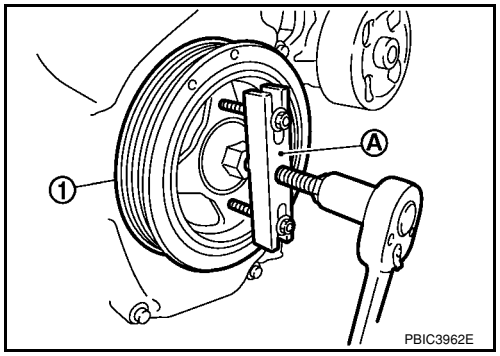

9. Remove oil pan (lower). Refer to EM-24, "Component".
NOTE:
When crankshaft sprocket, oil pump sprocket and other related parts are not removed, this step is unnecessary.
10. Remove intake valve timing control solenoid valve.
11. Remove drive belt auto-tensioner.
12. Loosen bolts in reverse order as shown.

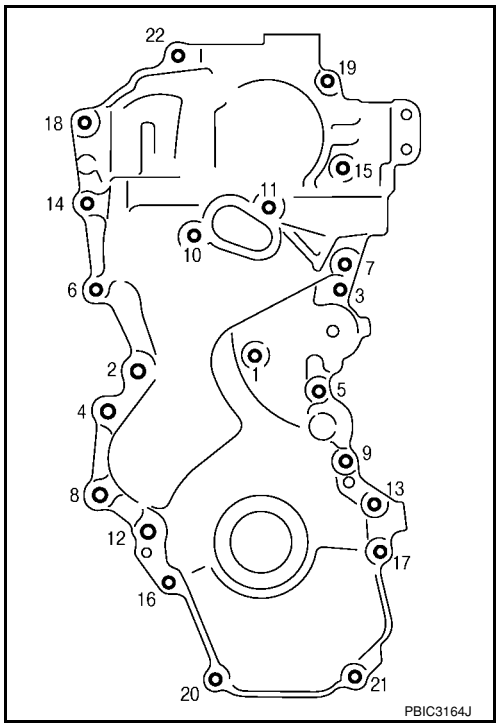

13. Cut liquid gasket by prying the position (⬅) shown, and then remove the front cover.
    CAUTION:
    - **Be careful not to damage the mating surface.**
    - **A more adhesive liquid gasket is applied compared to previous types when shipped, so it should not be forced off the position not specified.**

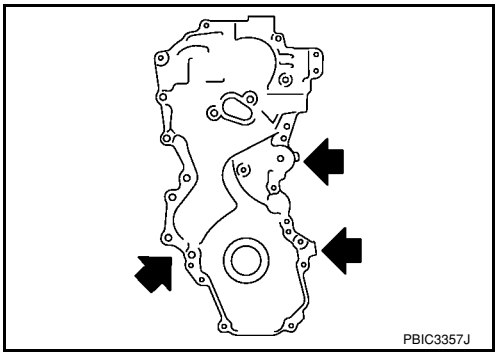

14. Remove front oil seal from front cover.
    - Lift up front oil seal using a suitable tool.
    CAUTION:
    Be careful not to damage front cover.
15. Push in timing chain tensioner plunger.
16. Insert a stopper pin (A) into the body hole to retain the plunger in collapsed position.
    NOTE:
    Use approximately 1.5 mm (0.059 in) diameter. hard metal pin as a stopper pin.
17. Remove timing chain tensioner (1).

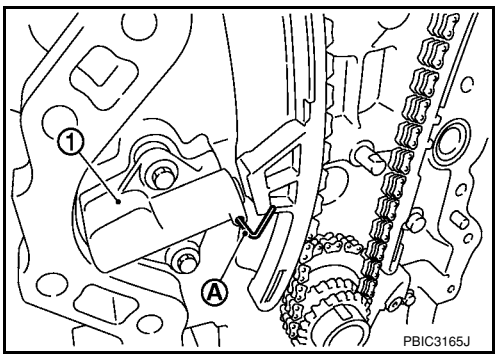

18. Remove timing chain slack guide (2), timing chain tension guide (3) and timing chain (1).
    CAUTION:
    Never rotate each crankshaft and camshaft individually while timing chain is removed. It causes interference between valve and piston.

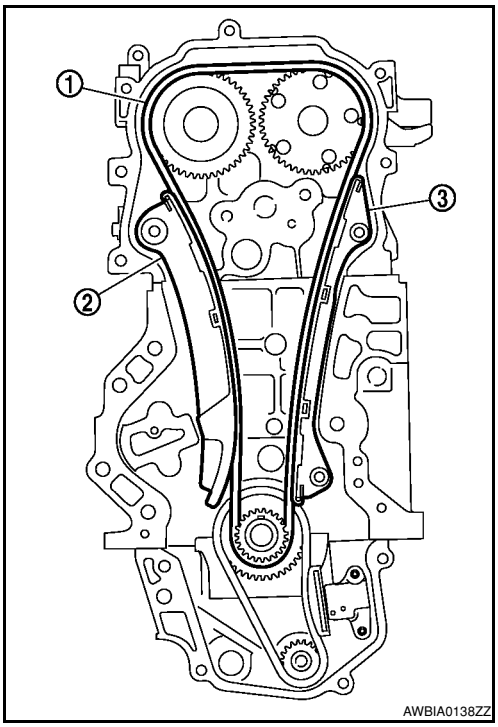

19. Press stopper tab (A) in the direction shown to push the timing chain slack guide (B) toward timing chain tensioner (for oil pump) (1).
    - The slack guide (B) is released by pressing the stopper tab (A). As a result, the slack guide (B) can be moved.
20. Insert stopper pin (D) into tensioner body hole (C) to secure timing chain slack guide (B).
    NOTE:
    Use a hard metal pin with a diameter of approximately 1.2 mm (0.047 in) as a stopper pin.
21. Remove timing chain tensioner (for oil pump).

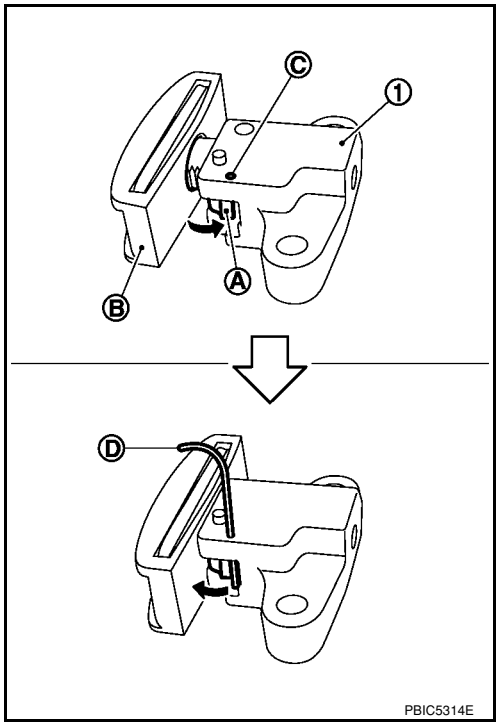

22. Hold the WAF part of oil pump shaft (A), and then loosen the oil pump sprocket bolt and remove them.

    1 : Oil pan (upper)
    2 : Oil pump
    ⇦ : Engine front

    CAUTION:
    - **Secure the oil pump shaft with the WAF part.**
    - **Never loosen the oil pump sprocket bolt by tightening the oil pump drive chain.**

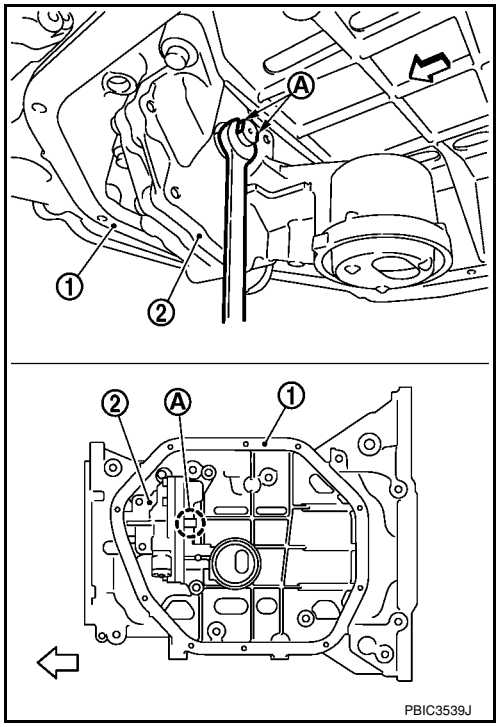

23. Remove crankshaft sprocket, oil pump sprocket and oil pump drive chain as a set.
24. Remove timing chain tension guide (front cover side) from front cover if necessary.

INSPECTION AFTER REMOVAL

Timing Chain

- Check timing chain and oil pump drive chain for cracks (A) and any excessive wear (B) at the roller links of timing chain.
- Replace timing chain and/or oil pump drive chain if necessary.

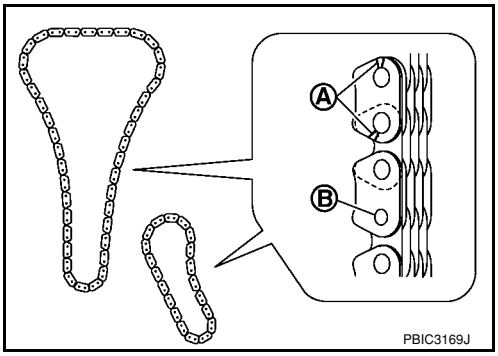

INSTALLATION

NOTE:

The figure shows the relationship between the matching mark on each timing chain and that on the corresponding sprocket, with the components installed.

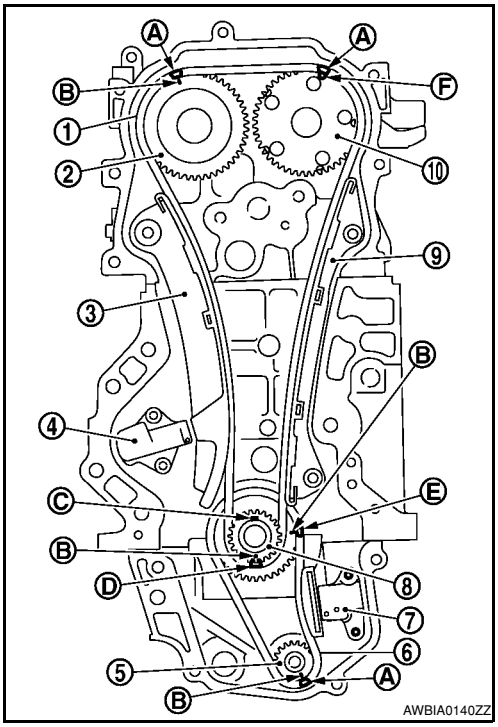

1. Make sure that crankshaft key points are aligned.

1	: Timing chain
2	: Camshaft sprocket (EXH)
3	: Timing chain slack guide
4	: Timing chain tensioner
5	: Oil pump sprocket
6	: Oil pump drive chain
7	: Chain tensioner (for oil pump)
8	: Crankshaft sprocket
9	: Timing chain tension guide
10	: Camshaft sprocket (INT)
A	: Matching mark (dark blue link)
B	: Matching mark (stamping)
C	: Crankshaft key position (straight up)
D	: Matching mark (gold link)
E	: Matching mark (orange link)
F	: Matching mark (outer groove*)

NOTE:

*: There are two outer grooves in camshaft sprocket (INT). The wider one is a matching mark.

2. If the timing chain tension guide (front cover side) is removed, install it to the front cover.

CAUTION:

Check the joint condition by sound or feeling.

3. Install crankshaft sprocket (2), oil pump sprocket (3) and oil pump drive chain (1).

A	: Matching mark (stamping)
B	: Matching mark (orange link)
C	: Matching mark (dark blue link)

- Install it by aligning matching marks on each sprocket and oil pump drive chain.
- If these matching marks are not aligned, rotate the oil pump shaft slightly to correct the position.

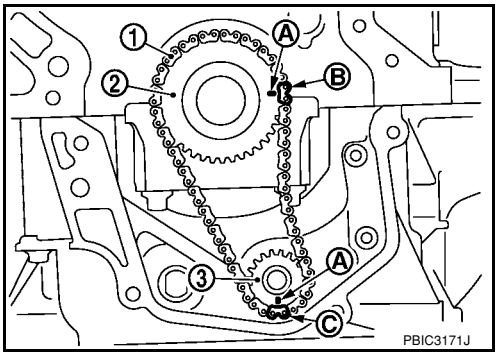

CAUTION:

Check matching mark position of each sprocket after installing the oil pump drive chain.

4. Hold the WAF part of oil pump shaft (A), and then tighten the oil pump sprocket bolt.

   1 : Oil pan (upper)
   2 : Oil pump
   ⇦ : Engine front

   CAUTION:
   - **Secure the oil pump shaft with the WAF part.**
   - **Never loosen the oil pump sprocket bolt by tightening the oil pump drive chain.**

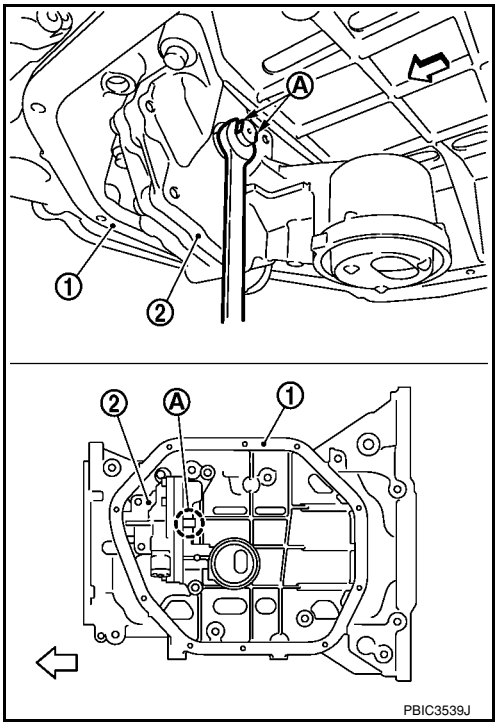

5. Install chain tensioner (for oil pump) (1).
   1. Fix the plunger at the most compressed position using a stopper pin (A), and then install it.
   2. Securely pull out (⬅) the stopper pin after installing the chain tensioner (for oil pump).
   3. Check matching mark position of oil pump drive chain and each sprocket again.

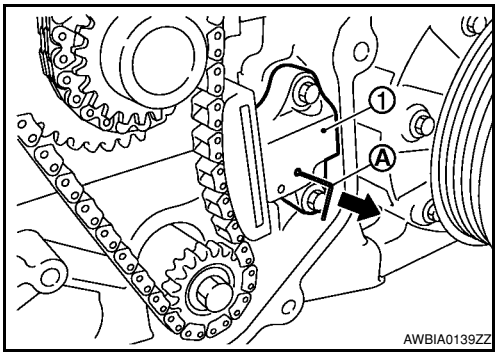

6. Align the matching marks of each sprocket with the matching marks of timing chain.

   1 : Camshaft sprocket (EXH)
   2 : Camshaft sprocket (INT)
   3 : Timing chain
   A : Matching mark (dark blue link)
   B : Matching mark (stamping)
   C : Matching mark (outer groove*)
   D : Matching mark (gold link)
   E : Matching mark (stamping)

   NOTE:
   *: There are 2 outer grooves in camshaft sprocket (INT). The wider one is a matching mark.
   - If these matching marks are not aligned, rotate the camshaft slightly by holding the hexagonal portion to correct the position.

   CAUTION:
   Check matching mark position of each sprocket and timing chain again after installing the timing chain.

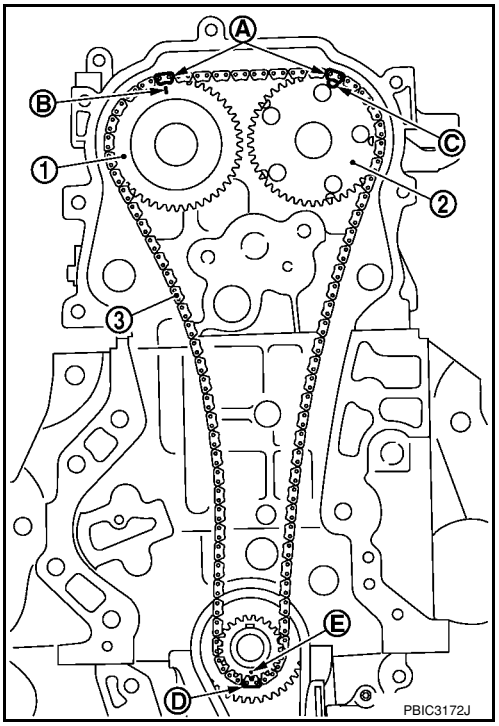

7. Install the timing chain tension guide (3) and the timing chain slack guide (2).

   1 : Timing chain

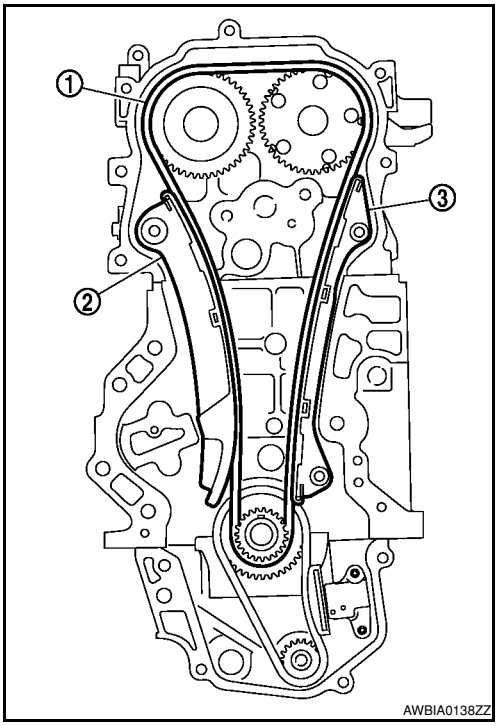

8. Install timing chain tensioner (1).
   1. Fix the plunger at the most compressed position using a stopper pin (A), and then install it.
   2. Securely pull out the stopper pin after installing the timing chain tensioner.

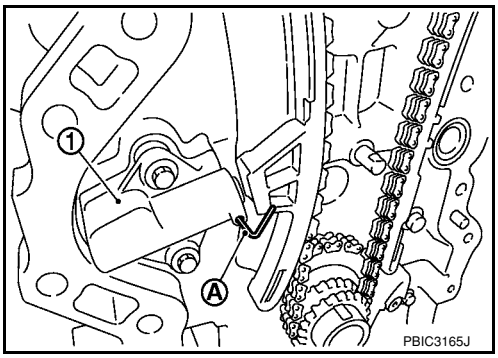

9. Check matching mark position of timing chain and each sprocket again.
10. Apply new engine oil to new front oil seal joint surface.
11. Using a suitable tool install front oil seal so that each seal lip is oriented as shown.

    A : Dust seal lip
    B : Oil seal lip
    ⇦ : Engine front
    ⬅ : Engine rear

    - Press-fit front oil seal until it is flush with front end surface of front cover as shown below with a suitable tool.

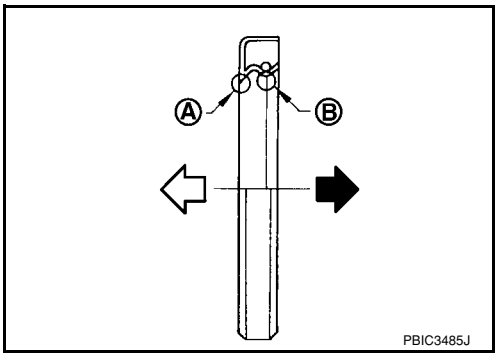

Within 0.3 mm (0.012 in) toward engine front
Within 0.5 mm (0.020 in) toward engine rear

CAUTION:
- **Be careful not to damage front cover and crankshaft.**
- **Press-fit oil seal straight to avoid causing burrs or tilting.**
- **Never touch grease applied onto oil seal lip.**

12. Install new O-ring to cylinder block.
    CAUTION:

Be sure O-rings a aligned properly.

13. Apply the sealant without breaks to the specified location using Tool.
Use Genuine Silicone RTV Sealant or equivalent. Refer to GI-42, "Recommended Chemical Product and Sealant".

Tool number WS39930000 (–)

A : Liquid gasket application area

⇦ : Engine outside

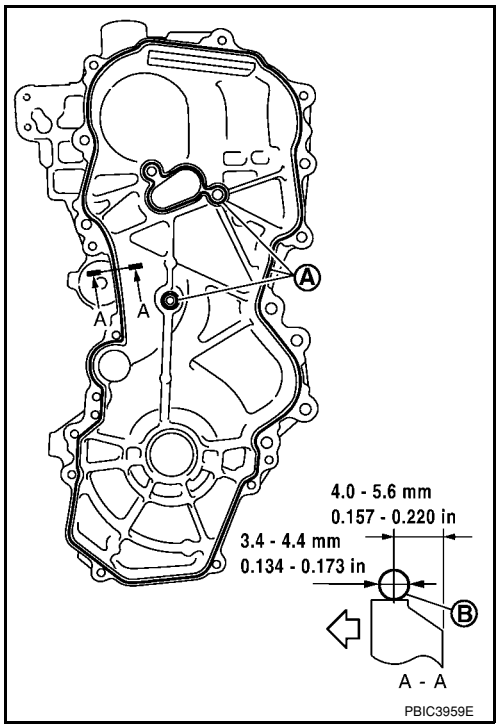

14. Make sure that matching marks of timing chain and each sprocket are still aligned.
CAUTION:
- **Make sure O-ring on cylinder block is correctly installed.**
- **Be careful not to damage front oil seal by interference with front end of crankshaft.**

15. Install front cover, and tighten bolts in numerical order as shown.
CAUTION:
Attaching should be done within 5 minutes after liquid gasket application.
NOTE:
Installation position of bolts is as shown.

M6 bolts	:	No. 1
M10 bolts	:	No. 6, 7, 10, 11, 14
M12 bolts	:	No. 2, 4, 8, 12
M8 bolts	:	Except the above

16. Tighten all bolts are in two stages to specified torque in numerical order as shown.
CAUTION:
Be sure to wipe off any excessive liquid gasket leaking.

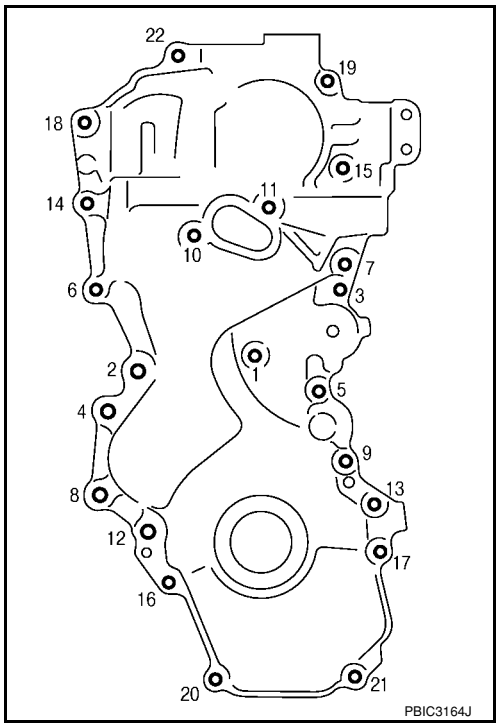

17. Install crankshaft pulley.
CAUTION:
- **Never damage front oil seal lip section.**
- **If needed use a plastic hammer, tap on its center portion (not circumference) to seat crankshaft pulley.**

18. Secure crankshaft pulley (1) using Tool (A).

Tool Number (A) : KV10109300 (—)

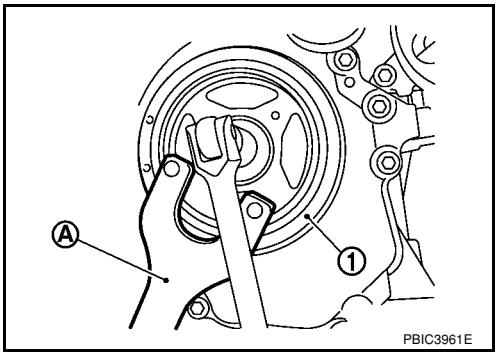

19. Apply new engine oil to thread and seat surfaces of crankshaft pulley bolt.
20. Tighten crankshaft pulley bolt in three steps.

Step 1 : 68.6 N·m (7.0 kg-m, 51 ft-lb)
Step 2 : 0 N·m (0 kg-m, 0 ft-lb)
Step 3 : 29.4 N·m (3.0 kg-m, 22 ft-lb)

21. Put a paint mark (B) on crankshaft pulley (2), matching with any one of six easy to recognize angle marks (A) on crankshaft pulley bolt flange (1).
22. Turn another 60 degrees clockwise (angle tightening) using Tool.
    - Check the tightening angle with movement of one angle mark.

Tool number : KV10112100 (BT-8653-A)

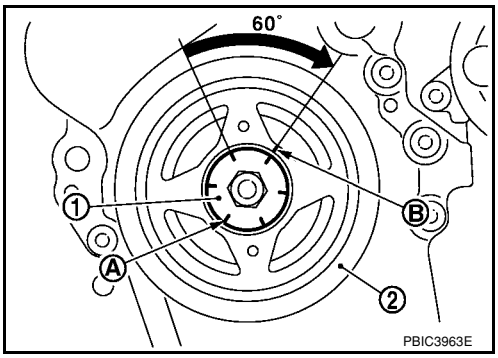

23. Make sure that crankshaft rotates clockwise smoothly.
24. Installation of the remaining components is in the reverse order of removal.

CAMSHAFT

Component

INFOID:0000000001702495

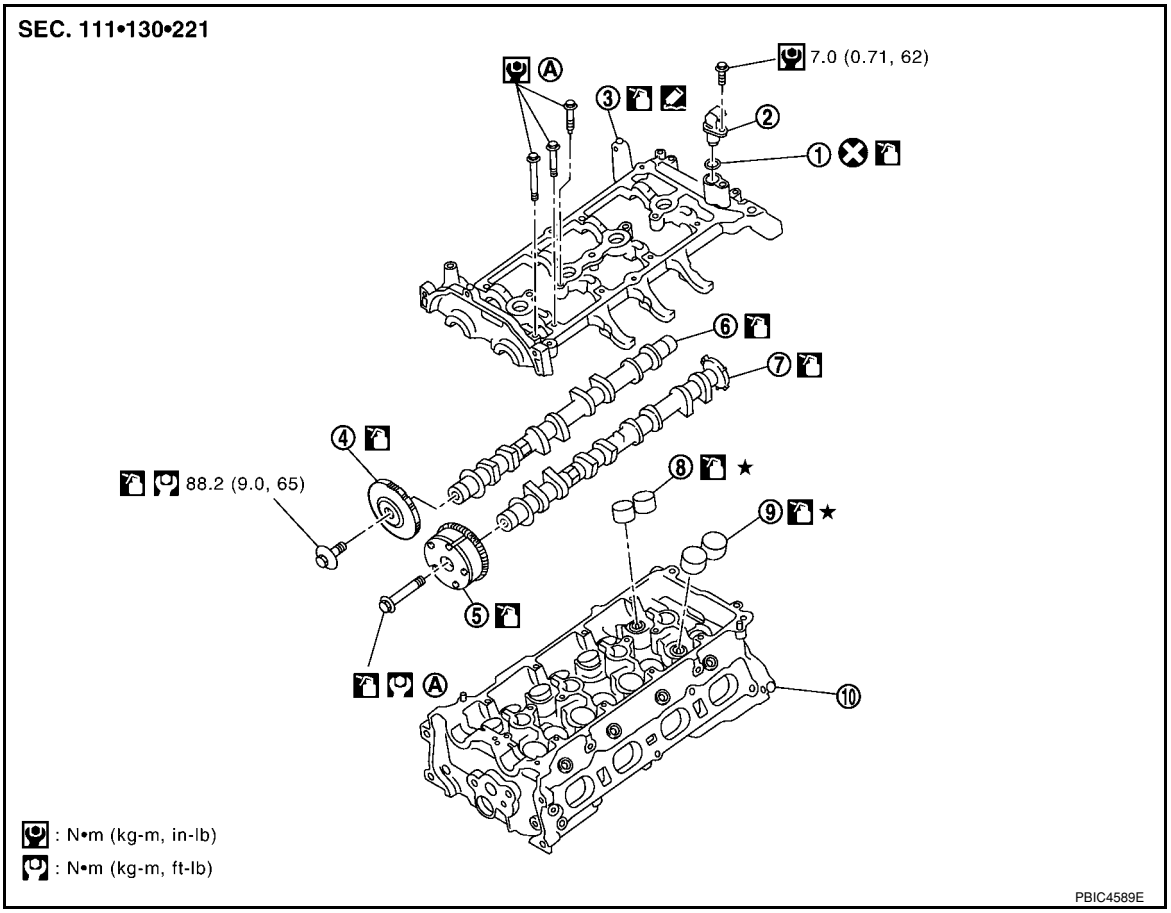

1. O-ring	2. Camshaft position sensor (PHASE)	3. Camshaft bracket
4. Camshaft sprocket (EXH)	5. Camshaft sprocket (INT)	6. Camshaft (EXH)
7. Camshaft (INT)	8. Valve lifter (EXH)	9. Valve lifter (INT)
10. Cylinder head		
A. Refer to EM-47.		

Removal and Installation

INFOID:0000000001702496

REMOVAL

WARNING:
- **Put a "CAUTION: FLAMMABLE" sign in the workshop.**
- **Be sure to work in a well ventilated area and furnish workshop with a CO_2 fire extinguisher.**
- **Do not smoke while servicing fuel system. Keep open flames and sparks away from the work area.**

1. Release the fuel pressure. Refer to EC-78, "Fuel Pressure Check".
2. Disconnect negative battery cable. Refer to SC-6, "Removal and Installation".
3. Remove front RH wheel. Refer to WT-6.
4. Remove front fender protector (RH). Refer to EI-23.
5. Drain engine coolant. Refer to CO-8.
   NOTE:
   Perform this step when engine is cold.
6. Remove the following parts.
   - Intake manifold; Refer to EM-18.
   - Rocker cover; Refer to EM-30.

- Fuel tube and fuel injector assembly; Refer to EM-33.
- Front cover, timing chain and related parts; Refer to EM-37.

7. Remove camshaft position sensor (PHASE) from camshaft bracket.
   CAUTION:
   - **Handle carefully to avoid dropping and shocks.**
   - **Never disassemble.**
   - **Never allow metal powder to adhere to magnetic part at sensor tip.**
   - **Never place sensor in a location where it is exposed to magnetism.**
8. Put the matching mark (A) on the camshaft sprocket (INT) (2) and the camshaft bracket (1) as shown.

   ⇦ : Engine front

   NOTE:
   It prevents the knock pin of the camshaft (INT) from engaging with the incorrect pin hole when installing the camshaft sprocket (INT).

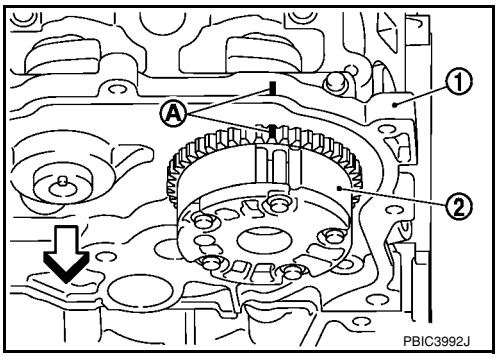

9. Remove camshaft sprockets (INT) (1) and (EXH) (2).
   - Secure hexagonal part (A) of camshaft with a wrench. Loosen camshaft sprocket bolts and remove camshaft sprocket.
     CAUTION:
     - **Never rotate crankshaft or camshaft while timing chain is removed. It causes interference between valve and piston.**
     - **Never loosen the bolts with securing anything other than the camshaft hexagonal part or with tensioning the timing chain.**

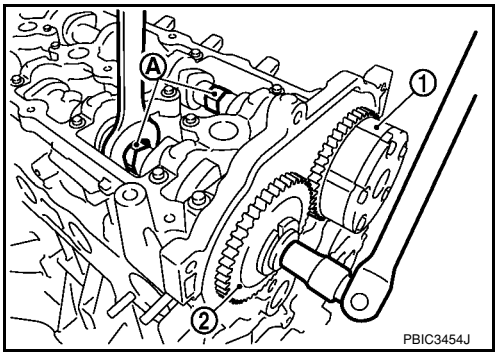

10. Loosen bolts in reverse order as shown.

    ⇦ : Engine front

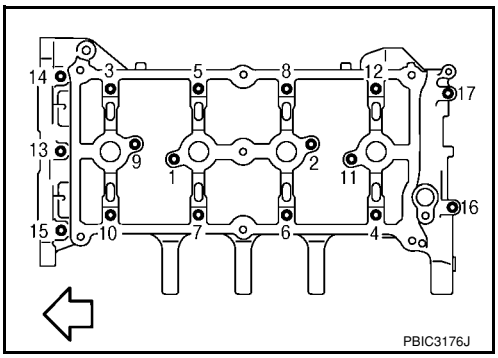

11. Cut liquid gasket by prying the position (⬅) shown, and then remove the camshaft bracket.

    ⇦ : Engine front

    CAUTION:
    - **Be careful not to damage the mating surface.**
    - **A more adhesive liquid gasket is applied compared to previous types when shipped, so it should not be forced off the position not specified.**

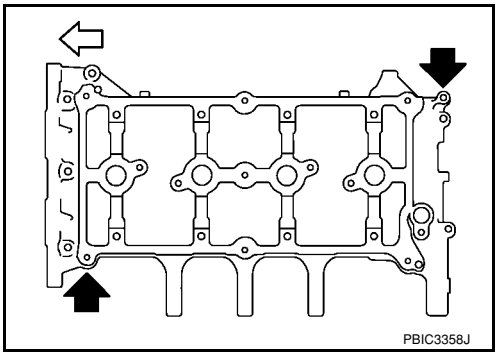

12. Remove camshafts.

13. Remove valve lifters.
    NOTE:
    Identify installed positions, and store them without mixing them up.

INSPECTION AFTER REMOVAL

Camshaft Runout

1. Put V-block on a precise flat table, and support No. 2 and 5 journal of camshaft.
   CAUTION:
   Never support No. 1 journal (on the side of camshaft sprocket) because it has a different diameter from the other four locations.
2. Set dial indicator (A) vertically to No. 3 journal.
3. Turn camshaft to one direction with hands, and measure the camshaft runout on dial indicator. (Total indicator reading)

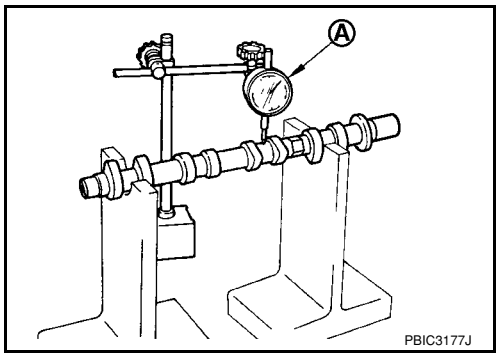

Standard : Less than 0.02 mm (0.0008 in).
Limit : 0.05 mm (0.0020 in)

4. If it exceeds the limit, replace camshaft.

Camshaft Cam Height

1. Measure the camshaft cam height with a micrometer (A).

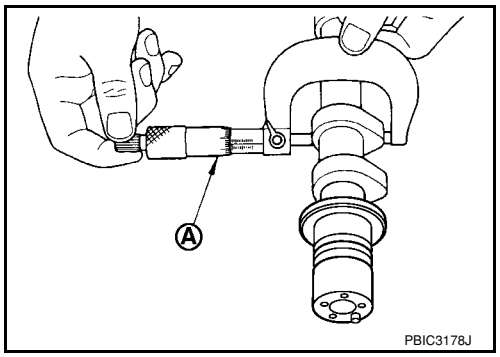

Standard:
Intake : 44.605 - 44.795 mm (1.7560 - 1.7635 in)
Exhaust : 43.175 - 43.365 mm (1.6997 - 1.7072 in)

Limit:
Intake : 44.405 mm (1.7482 in)
Exhaust : 42.975 mm (1.6919 in)

2. If it exceeds the limit, replace camshaft.

Camshaft Journal Oil Clearance

CAMSHAFT JOURNAL OUTER DIAMETER

Measure the outer diameter of camshaft journal with a micrometer (A).

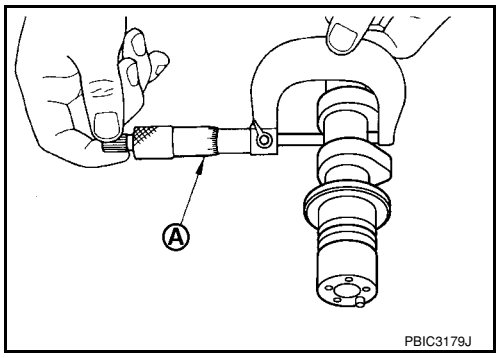

Standard:
No. 1 : 27.935 - 27.955 mm (1.0998 - 1.1006 in)
No. 2, 3, 4, 5 : 24.950 - 24.970 mm (0.9823 - 0.9831 in)

CAMSHAFT BRACKET INNER DIAMETER

- Tighten camshaft bracket bolts with specified torque.

- Measure the inner diameter of camshaft bracket with a bore gauge (A).

B : Measuring direction of inner diameter

Standard:

No. 1 : 28.000 - 28.021 mm (1.1024 - 1.1032 in)

No. 2, 3, 4, 5 : 25.000 - 25.021 mm (0.9843 - 0.9851 in)

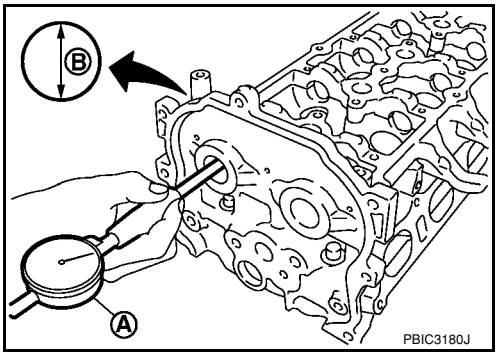

CAMSHAFT JOURNAL OIL CLEARANCE

- (Oil clearance) = (Camshaft bracket inner diameter) – (Camshaft journal diameter)

Standard:

No. 1 : 0.045 - 0.086 mm (0.0018 - 0.0034 in)

No. 2, 3, 4, 5 : 0.030 - 0.071 mm (0.0012 - 0.0028 in)

Limit:

: 0.15 mm (0.0059 in)

- If it exceeds the limit, replace camshaft or cylinder head, or both.
  NOTE:
  Camshaft bracket cannot be replaced as a single part, because it is machined together with cylinder head. Replace whole cylinder head assembly.

Camshaft End Play

1. Install camshaft in cylinder head.
2. Install dial indicator in thrust direction on front end of camshaft. Read the end play of dial indicator (A) when camshaft is moved forward/backward (in direction to axis).

Standard : 0.075 - 0.153 mm (0.0030 - 0.0060 in)

Limit : 0.24 mm (0.0094 in)

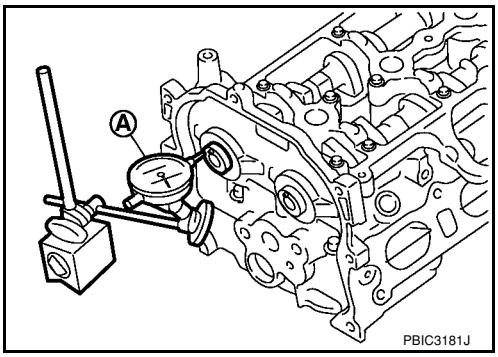

- Measure the following parts if out of the standard.
  - Dimension “A” for groove of cylinder head No. 1 journal

Standard : 4.000 - 4.030 mm (0.1575 - 0.1587 in)

  - Dimension “B” for camshaft flange

Standard : 3.877 - 3.925 mm (0.1526 - 0.1545 in)

- Apply the standards above, and then replace camshaft and/or cylinder head, if necessary.

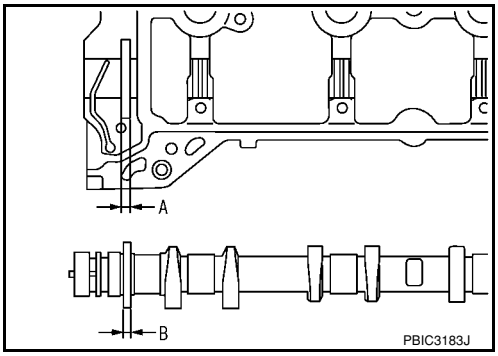

Camshaft Sprocket Runout

1. Put V-block on precise flat table, and support No. 2 and 5 journals of camshaft.
   CAUTION:
   Never support No. 1 journal (on the side of camshaft sprocket) because it has a different diameter from the other four locations.

2. Measure the camshaft sprocket runout with a dial indicator (A). (Total indicator reading)

Limit : 0.15 mm (0.0059 in)

- If it exceeds the limit, replace camshaft sprocket.

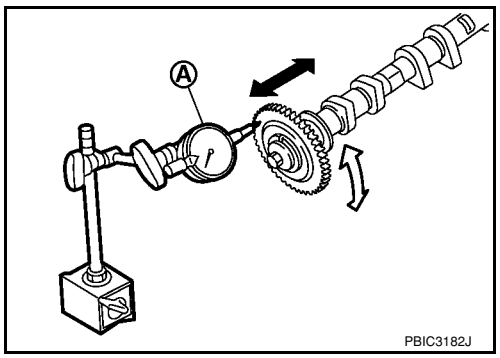

Valve Lifter

Check if surface of valve lifter has any wear or cracks.

- If anything above is found, replace valve lifter. Refer to EM-55, "Valve Clearance".

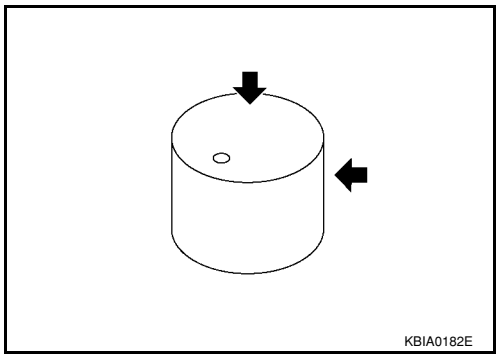

Valve Lifter Clearance

VALVE LIFTER OUTER DIAMETER

- Measure the outer diameter of valve lifter with a micrometer (A).

Standard:

Intake : 33.977 - 33.987 mm (1.3377 - 1.3381 in)

Exhaust : 29.977 - 29.987 mm (1.1802 - 1.1806 in)

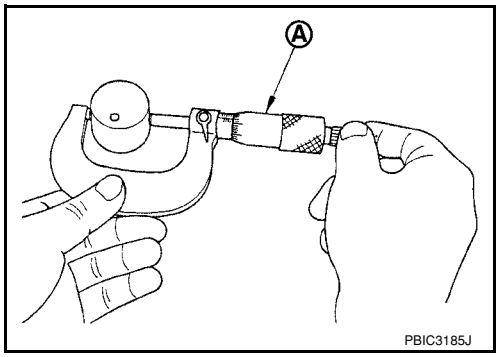

VALVE LIFTER HOLE DIAMETER

Measure the diameter of valve lifter hole of cylinder head with an inside micrometer (A).

Standard:

Intake : 34.000 - 34.021 mm (1.3386 - 1.3394 in)

Exhaust : 30.000 - 30.021 mm (1.1811 - 1.1819 in)

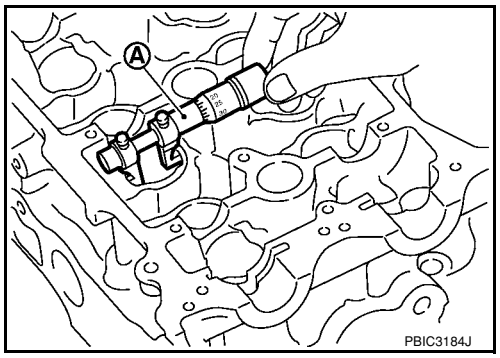

VALVE LIFTER CLEARANCE

- (Valve lifter clearance) = (Valve lifter hole diameter) – (Valve lifter outer diameter)

Standard: 0.013 - 0.044 mm (0.0005 - 0.0017 in)

- If out of the standard, referring to the each standard of valve lifter outer diameter and valve lifter hole diameter, replace either or both valve lifter and cylinder head.

INSTALLATION

1. Install valve lifters.
   - Install them in the original positions.
2. Install camshafts.

- Clean camshaft journal to remove any foreign material.
- Distinguish between the intake and the exhaust by looking at the different shapes of the front and rear ends of the camshaft or using the identification colors (A) and (B).

1 : Camshaft (EXH)
2 : Camshaft (INT)

Identification color	A	B
Camshaft (EXH)	—	Yellow
Camshaft (INT)	Yellow	—

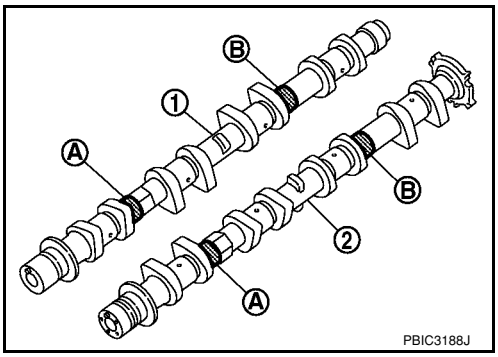

- Install camshafts so that camshaft dowel pins (A) on the front side are positioned as shown.

1 : Camshaft (EXH)
2 : Camshaft (INT)

NOTE:
Though camshaft does not stop at the positions as shown, for the placement of cam nose, it is generally accepted camshaft is placed for the same direction as shown.

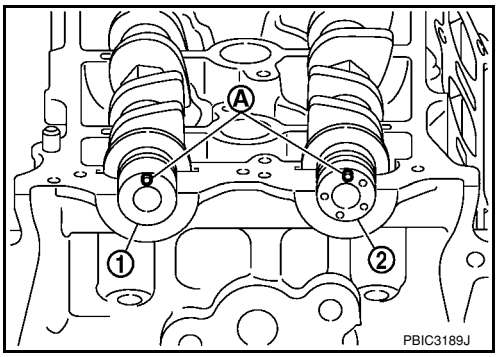

3. Remove foreign material completely from camshaft bracket backside and from cylinder head installation face.
4. Apply liquid gasket (A) to camshaft bracket as shown.
Use Genuine Silicone RTV Sealant or equivalent. Refer to GI-42, "Recommended Chemical Product and Sealant".

Tool number WS39930000 (–)

B : Plug hole inner wall
⇦ : Engine front
⬅ : Engine outside

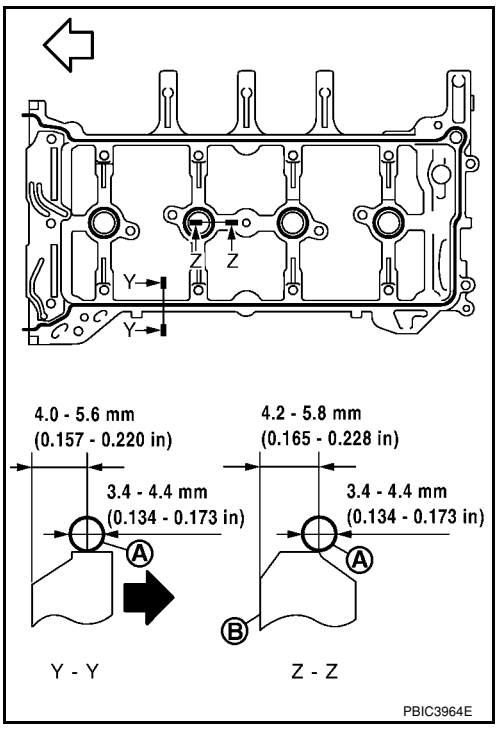

5. Install camshaft bracket bolts in three stage in numerical order as shown in numerical order as shown.

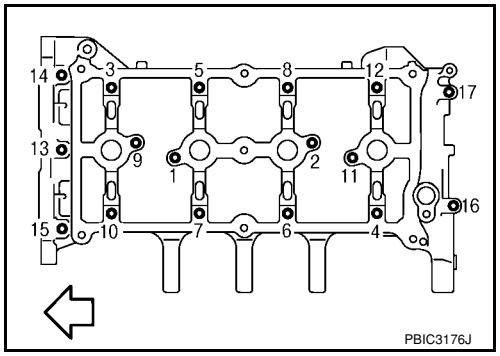

⇦ : Engine front

- There are two types of bolts. Locate the bolts as shown.

M6 bolts [thread length: 57.5 mm (2.264 in)]
: 13, 14 and 15 as shown
M6 bolts [thread length: 35.00 mm (1.378 in)]
: Except the above

6. Tighten all bolts in numerical order in three steps.

Step 1 : 1.96 N·m (0.20 kg-m, 17 in-lb)
Step 2 : 5.88 N·m (0.60 kg-m, 52 in-lb)
Step 3 : 9.5 N·m (0.97 kg-m, 84 in-lb)

7. Install the camshaft sprocket (INT) to the camshaft (INT).
NOTE:
When the camshaft sprocket (INT) (2) is removed, align the paint mark (A) put according to step "3". Securely align the knock pin and the pin hole, and then install them.

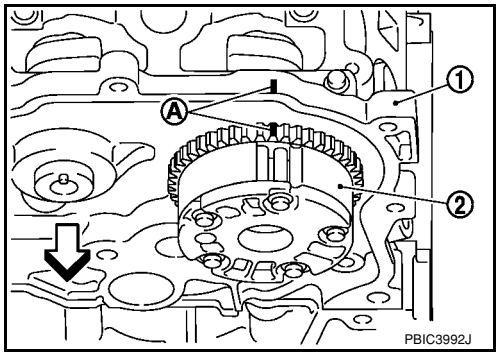

1 : Camshaft bracket
⇦ : Engine front

8. Tighten camshaft (INT) sprocket bolt.

Camshaft sprocket bolt (INT) : 35.0 N·m (3.6 kg-m, 26 ft-lb)

NOTE:
Secure the hexagonal part of camshaft (INT) using wrench to tighten bolt.

9. Turn 67 degrees clockwise (angle tightening) using Tool.

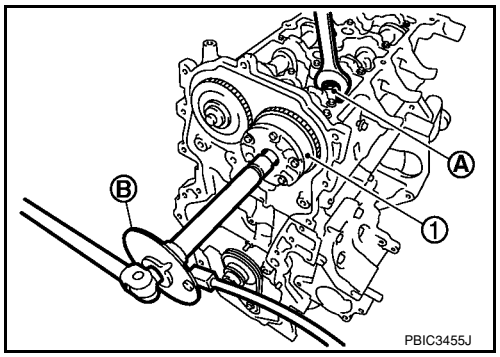

1 : Camshaft sprocket (INT)
A : Camshaft (INT) hexagonal part

CAUTION:
Never judge by visual inspection without an angle wrench.

Tool number : KV10112100 (BT-8653-A)

10. Install camshaft sprocket (EXH) (2).

    1 : Camshaft sprocket (INT)

    Camshaft sprocket bolt (EXH) : 88.2 N·m (9.0 kg-m, 65 ft-lb)

    NOTE:
    Secure the hexagonal part (A) of camshaft (EXH) using wrench to tighten bolt.

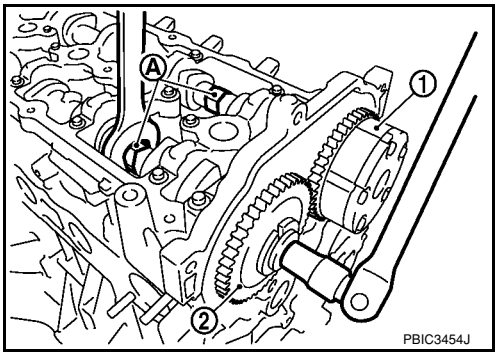

11. Install timing chain and related parts. Refer to EM-37.
12. Inspect and adjust valve clearance. Refer to EM-55, "Valve Clearance".
13. Installation of the remaining components is in the reverse order of removal.

INSPECTION AFTER INSTALLATION

The following are procedures for checking fluids leak, lubricates leak.

- Before starting engine, check oil/fluid levels including engine coolant and engine oil. If less than required quantity, fill to the specified level. Refer to GI-42, "Recommended Chemical Product and Sealant".
- Use procedure below to check for fuel leakage.
  - Turn ignition switch “ON” (with engine stopped). With fuel pressure applied to fuel piping, check for fuel leakage at connection points.
  - Start engine. With engine speed increased, check again for fuel leakage at connection points.
- Run engine to check for unusual noise and vibration.
  NOTE:
  If hydraulic pressure inside timing chain tensioner drops after removal/installation, slack in the guide may generate a pounding noise during and just after engine start. However, this is normal. Noise will stop after hydraulic pressure rises.
- Warm up engine thoroughly to make sure there is no leakage of fuel, or any oil/fluids including engine oil and engine coolant.
- Bleed air from lines and hoses of applicable lines, such as in cooling system.
- After cooling down engine, again check oil/fluid levels including engine oil and engine coolant. Refill to the specified level, if necessary.

Summary of the inspection items:

Item	Before starting engine	Engine running	After engine stopped
Engine coolant	Level	Leakage	Level
Engine oil	Level	Leakage	Level
Other oils and fluid*	Level	Leakage	Level
Fuel	Leakage	Leakage	Leakage
Exhaust gases	—	Leakage	—

* Transmission/transaxle/CVT fluid, power steering fluid, brake fluid, etc.

Inspection of Camshaft Sprocket (INT) Oil Groove

CAUTION:

- **Perform this inspection only when DTC P0011 is detected in self-diagnostic results of CONSULT-III and it is directed according to inspection procedure of EC section. Refer to EC-46.**
- **Check when engine is cold so as to prevent burns from the splashing engine oil.**

1. Check engine oil level. Refer to LU-6, "Inspection".
2. Perform the following procedure so as to prevent the engine from being unintentionally started while checking.

a. Remove intake manifold. Refer to EM-18, "Component".
b. Disconnect ignition coil and injector harness connectors.

3. Remove intake valve timing control solenoid valve. Refer to EM-37, "Component".

4. Clean the mating area of intake valve timing control solenoid valve. Insert a clean shop cloth (with no oil adhesion) into the oil hole (A) of the cylinder head.

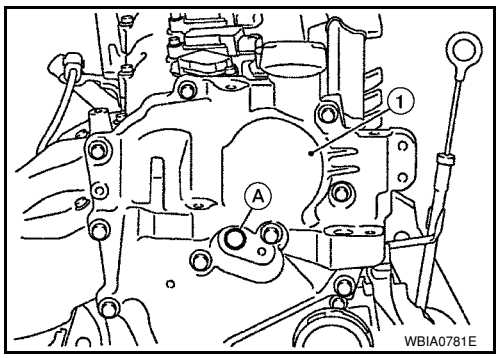

1 : Front cover

⇦ :Vehicle front

5. Install engine mounting bracket (RH), engine mounting insulator, and torque rod (RH) under the Step 4 condition. (With intake valve timing control solenoid valve removed, and a shop cloth inserted into the oil hole.) Refer to EM-72, "Component".
6. Crank engine, and then make sure that engine oil comes out from intake valve timing control solenoid valve hole (A). End crank after checking.
   - Check engine oil leakage by oil amount adhered to the waste inserted into the oil hole.

   WARNING:
   Be careful not to touch rotating parts (drive belts, idler pulley, and crankshaft pulley, etc.).
   CAUTION:
   - **Do not perform cranking without installing right engine mount bracket, right engine mount insulator, and right torque rod.**
   - **Prevent splashing by using a shop cloth so as to prevent the worker from injury from engine oil and so as to prevent engine oil contamination.**
   - **Prevent splashing by using a shop cloth so as to prevent engine oil from being splashed to engine and vehicle. Especially, be careful not to apply engine oil to rubber parts of drive belts, engine mounting insulator, etc. Wipe engine oil off immediately if it is splashed.**
7. Perform the following inspection if engine oil does not come out from intake valve timing control solenoid valve oil hole of the cylinder head.
   - Remove oil filter (for intake valve timing control), and then clean it. Refer to EM-76, "Component".
   - Clean oil groove between oil strainer and intake valve timing control solenoid valve. Refer to LU-5.
8. Remove components between intake valve timing control solenoid valve and camshaft sprocket (INT), and then check each oil groove for clogging.
   - Clean oil groove if necessary. Refer to LU-5.
9. Installation of the remaining components is in the reverse order of removal

Valve Clearance

INFOID:0000000001702497

INSPECTION

Perform inspection as follows after removal, installation or replacement of camshaft or valve-related parts, or if there is unusual engine conditions regarding valve clearance.

1. Remove rocker cover. Refer to EM-30.
2. Measure the valve clearance with the following procedure:

a. Set No. 1 cylinder at TDC of its compression stroke.
   - Rotate crankshaft pulley (1) clockwise and align TDC mark (no paint) (B) to timing indicator (A) on front cover.

C : White paint mark (Not use for service)

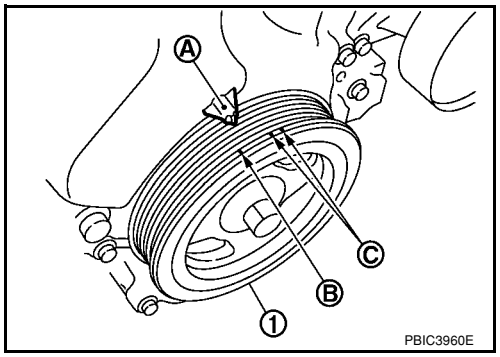

- At the same time, make sure that both intake and exhaust cam noses of No. 1 cylinder face inside (⬅) as shown.

  1 : Camshaft (INT)
  2 : Camshaft (EXH)
  ⇦ : Engine front

- If they do not face inside, rotate crankshaft pulley once more (360 degrees) and align as shown.

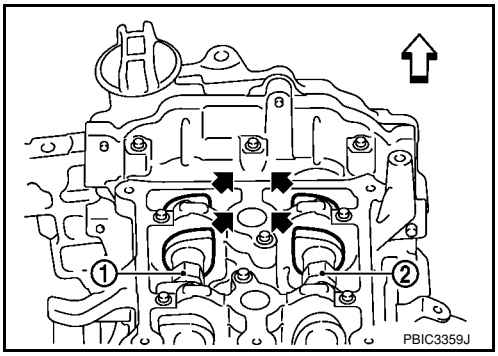

b. Use a feeler gauge, measure the clearance between valve lifter and camshaft.

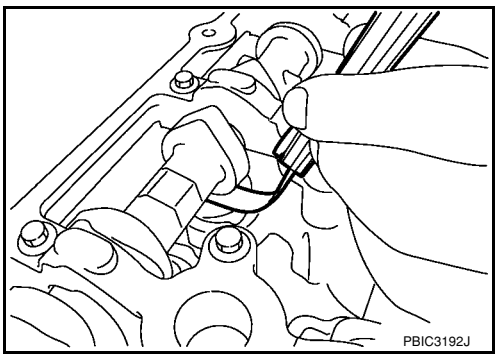

Valve clearance:

Unit: mm (in)

	Cold	Hot * (reference data)
Intake	0.26 - 0.34 (0.010 - 0.013)	0.304 - 0.416 (0.012 - 0.016)
Exhaust	0.29 - 0.37 (0.011 - 0.015)	0.308 - 0.432 (0.012 - 0.017)

*: Approximately 80°C (176°F)

- By referring to the figure, measure the valve clearances at locations marked "×" as shown in the table below [locations indicated with black arrow (⬅)] with a feeler gauge.
- No. 1 cylinder compression TDC

Measuring position		No. 1 CYL.	No. 2 CYL.	No. 3 CYL.	No. 4 CYL.
No. 1 cylinder at compression TDC	EXH	×		×	
	INT	×	×		

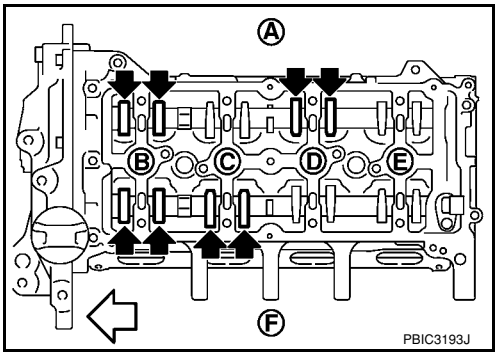

A : Exhaust side
B : No.1 cylinder
C : No.2 cylinder
D : No.3 cylinder
E : No.4 cylinder
F : Intake side
⇦ : Engine front

c. Set No.4 cylinder at TDC of its compression stroke.

- Rotate crankshaft pulley (1) one revolution (360 degrees) and align TDC mark (no paint) (B) to timing indicator (A) on front cover.

C : White paint mark (Not use for service)

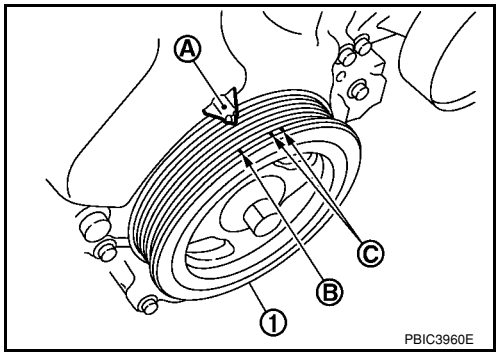

- By referring to the figure, measure the valve clearance at locations marked "×" as shown in the table below [locations indicated with black arrow (⬅)] with a feeler gauge.
- No. 4 cylinder compression TDC

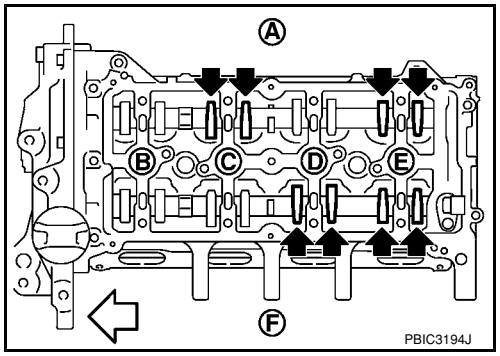

Measuring position		No. 1 CYL.	No. 2 CYL.	No. 3 CYL.	No. 4 CYL.
No. 4 cylinder at compression TDC	EXH		×		×
	INT			×	×

A : Exhaust side
B : No.1 cylinder
C : No.2 cylinder
D : No.3 cylinder
E : No.4 cylinder
F : Intake side
⇦ : Engine front

3. If out of standard, perform adjustment.

ADJUSTMENT

- Perform adjustment depending on selected head thickness of valve lifter.

1. Remove camshaft. Refer to EM-47, "Removal and Installation".
2. Remove valve lifters at the locations that are out of the standard.
3. Measure the center thickness of the removed valve lifters with a micrometer (A).

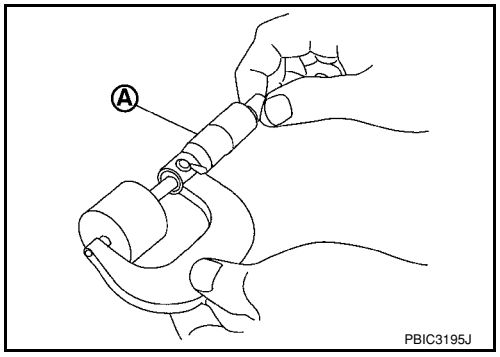

4. Use the equation below to calculate valve lifter thickness for replacement.

Valve lifter thickness calculation: $t = t_1 + (C_1 - C_2)$

t = Valve lifter thickness to be replaced
t_1 = Removed valve lifter thickness
C_1 = Measured valve clearance
C_2 = Standard valve clearance:

Intake : 0.30 mm (0.012 in)
Exhaust : 0.33 mm (0.013 in)

- Thickness of new valve lifter (B) can be identified by stamp mark (A) on the reverse side (inside the cylinder).
  Stamp mark “302” indicates 3.02 mm (0.1189 in) in thickness.

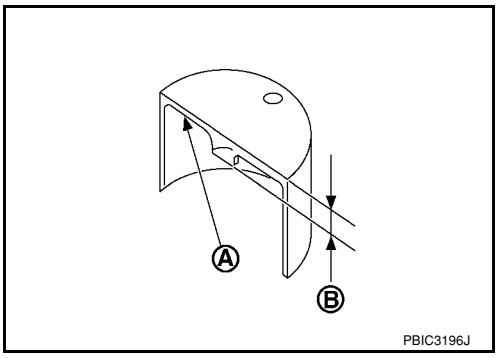

NOTE:
Available thickness of valve lifter: 26 sizes range 3.00 to 3.50 mm (0.1181 to 0.1378 in) in steps of 0.02 mm (0.0008 in) (when manufactured at factory). Refer to EM-104, "Standard and Limit".

5. Install the selected valve lifter.
6. Install camshaft. Refer to EM-47, "Removal and Installation".
7. Install timing chain and related parts. Refer to EM-37.
8. Manually rotate crankshaft pulley a few rotations.
9. Make sure that the valve clearances is within the standard.
10. Installation of the remaining components is in the reverse order of removal.

OIL SEAL

Removal and Installation of Valve Oil Seal

INFOID:0000000001702498

REMOVAL

1. Remove camshafts. Refer to EM-47, "Component".
2. Remove valve lifters. Refer to EM-47.
3. Rotate crankshaft, and set piston whose valve oil seal is to be removed to TDC. This will prevent valve from dropping into cylinder.
   CAUTION:
   When rotating crankshaft, be careful to avoid scarring front cover with timing chain.
4. Remove valve collet.
   - Compress valve spring using Tool, the attachment and the adapter (A). Remove valve collet with a suitable magnet hand (B).

   CAUTION:
   When working, be careful not to damage valve lifter holes.

   Tool number : KV101092S0 (J-26336-B)

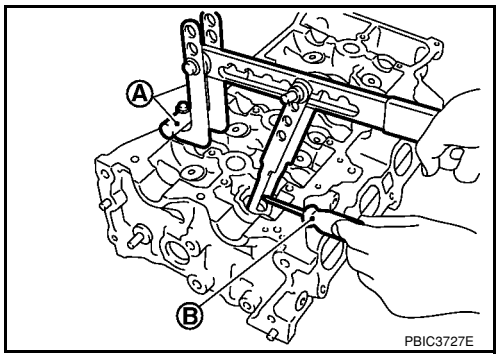

5. Remove valve spring retainer, valve spring and valve spring seat.
6. Remove valve oil seal using Tool (A).

   Tool number :KV10107902 (J-38959)

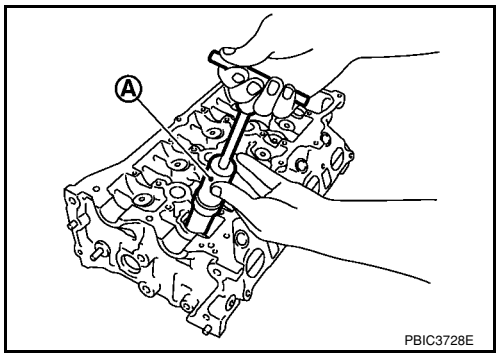

INSTALLATION

1. Apply new engine oil to valve oil seal joint surface and seal lip.
2. Press in valve oil seal to the height “H” shown using Tool (A).

   Height “H” : 15.1 - 15.7 mm (0.594 - 0.618 in)

   Tool number : KV10115600 (—)

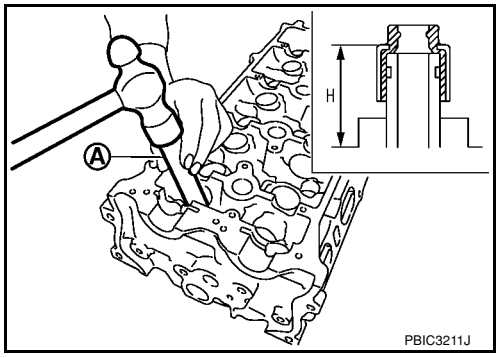

3. Installation of the remaining components is in the reverse order of removal.

Removal and Installation of Front Oil Seal

INFOID:0000000001702499

REMOVAL

1. Remove the following parts.
   - Front fender protector (RH); Refer to EI-23.

- Drive belt; Refer to EM-13, "Component".
- Crankshaft pulley; Refer to EM-37, "Component".

2. Remove front oil seal using a suitable tool.
   CAUTION:
   Be careful not to damage front cover and crankshaft.

INSTALLATION

1. Apply new engine oil to new front oil seal joint surface and seal lip.
2. Install front oil seal so that each seal lip is oriented as shown.

A : Dust seal lip
B : Oil seal lip
⇦ : Engine outside
⬅ : Engine inside

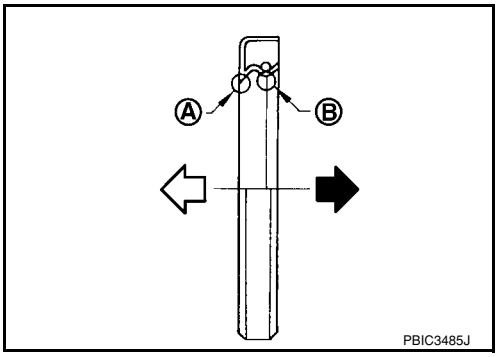

- Install front oil seal (2) using a suitable tool with outer diameter 57 mm (2.24 in) and inner diameter 45 mm (1.77 in) (A) to the dimension as shown.

  Within 0.3 mm (0.012 in) toward engine front
  Within 0.5 mm (0.020 in) toward engine rear

  CAUTION:
  - **Be careful not to damage front cover and crankshaft.**
  - **Press-fit oil seal straight to avoid causing burrs or tilting.**
  - **Do not touch grease applied on oil seal lip.**

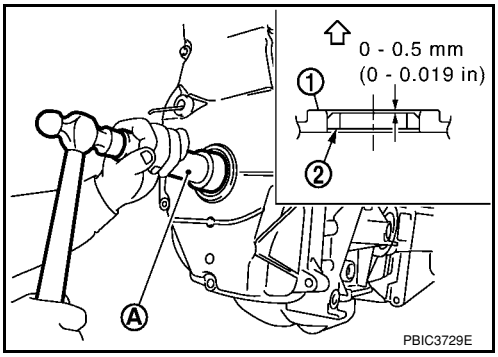

3. Installation of the remaining components is in the reverse order of removal.

Removal and Installation of Rear Oil Seal

INFOID:0000000001702500

REMOVAL

1. Remove transaxle assembly. Refer to MT-16 (M/T models), AT-226 (A/T models) or CVT-178 (CVT models).
2. Remove clutch cover and clutch disk (M/T models). Refer to CL-13.
3. Remove drive plate (A/T or CVT models) or flywheel (M/T models). Refer to EM-76, "Component".
4. Remove rear oil seal with a suitable tool.
   CAUTION:
   Be careful not to damage crankshaft and cylinder block.

INSTALLATION

1. Apply the liquid gasket lightly to entire outside area of new rear oil seal.
   Use Genuine Silicone RTV Sealant or equivalent. Refer to GI-42, "Recommended Chemical Product and Sealant".

2. Install rear oil seal so that each seal lip is oriented as shown.

A : Dust seal lip
B : Oil seal lip
⇦ : Engine outside
⬅ : Engine inside

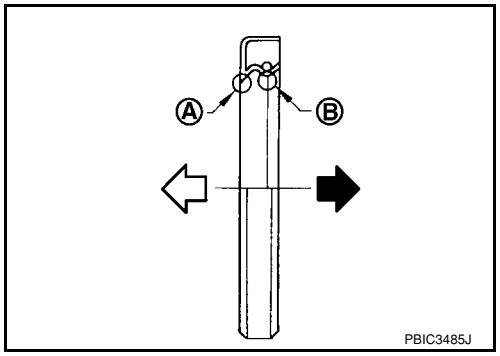

- Install rear oil seal with a suitable tool with an outer diameter 115 mm (4.53 in) and inner diameter 90 mm (3.54 in) (A).
  CAUTION:
  - **Be careful not to damage crankshaft and cylinder block.**
  - **Press-fit oil seal straight to avoid causing burrs or tilting.**
  - **Do not touch grease applied onto oil seal lip.**

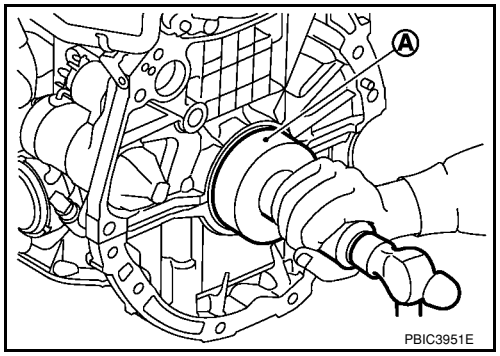

- Install rear oil seal (1) to the position as shown.

A : Rear end surface of cylinder block

NOTE:
The standard surface of the dimension is the rear end surface of cylinder block.

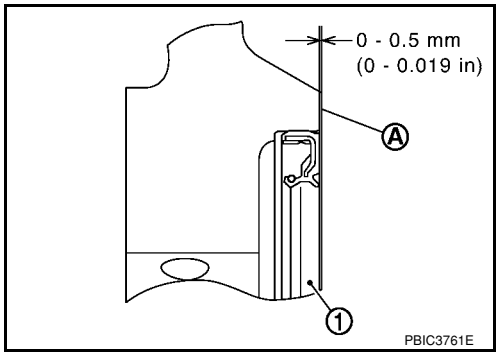

3. Installation of the remaining components is in the reverse order of removal.

CYLINDER HEAD

On-Vehicle Service

INFOID:0000000001702501

CHECKING COMPRESSION PRESSURE

1. Warm up engine thoroughly. Then, stop it.
2. Release fuel pressure. Refer to EC-78, "Fuel Pressure Check".
3. Disconnect fuel pump fuse (1) to avoid fuel injection during measurement.

⇦ : Vehicle front

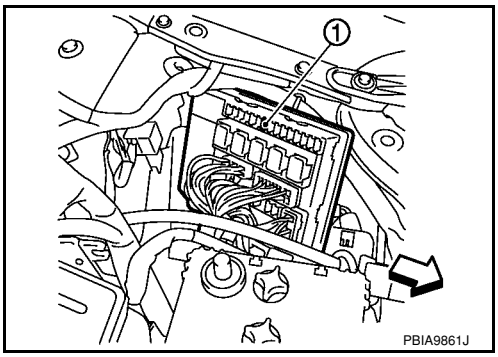

4. Remove engine cover. Refer to EM-18, "Component".
5. Remove ignition coil and spark plug from each cylinder. Refer to EM-30.
6. Connect an engine tachometer (not required in use of CONSULT-III).
7. Install a suitable compression tester with an adapter onto spark plug hole.

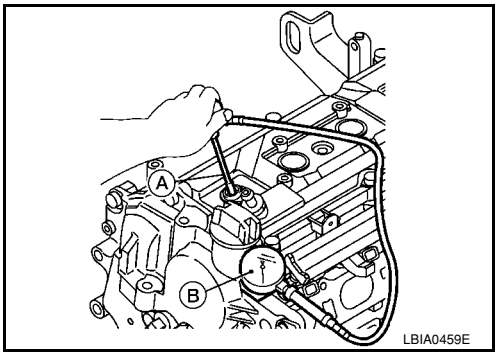

- Use the adapter whose picking up end inserted to spark plug hole is smaller than 20 mm (0.79 in) in diameter. Otherwise, it may be caught by cylinder head during removal.

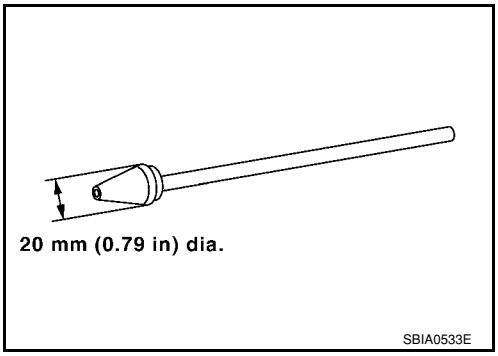

8. With accelerator pedal fully depressed, turn ignition switch to “START” for cranking. When the gauge pointer stabilizes, read the compression pressure and the engine rpm. Perform these steps to check each cylinder.

Compression pressure:

Unit: kPa (bar, kg/cm^2 psi) /rpm

Standard	Minimum	Differential limit between cylinders
1,500 (15.0, 15.3, 217.6) / 200	1,200 (12.0, 12.2, 174) / 200	100 (1, 1, 15) / 200

CAUTION:
Always use a fully charged battery to obtain the specified engine speed.

- If the engine speed is out of the specified range, check battery liquid for proper gravity. Check engine speed again with normal battery gravity.
- If compression pressure is below minimum value, check valve clearances and parts associated with combustion chamber (Valve, valve seat, piston, piston ring, cylinder bore, cylinder head, cylinder head gasket). After the checking, measure the compression pressure again.
- If some cylinder has low compression pressure, pour small amount of engine oil into the spark plug hole of the cylinder to re-check it for compression.
  - If the added engine oil improves the compression, piston rings may be worn out or damaged. Check piston rings and replace if necessary.
  - If the compression pressure remains at low level despite the addition of engine oil, valves may be malfunctioning. Check valves for damage. Replace valve or valve seat accordingly.
- If two adjacent cylinders have respectively low compression pressure and their compression remains low even after the addition of engine oil, cylinder head gasket is leaking. In such a case, replace cylinder head gasket.

9. After inspection is completed, install removed parts.
10. Start the engine, and confirm that the engine runs smoothly.
11. Perform trouble diagnosis. If DTC appears, erase it. Refer to EC-81.

Component

INFOID:0000000001702502

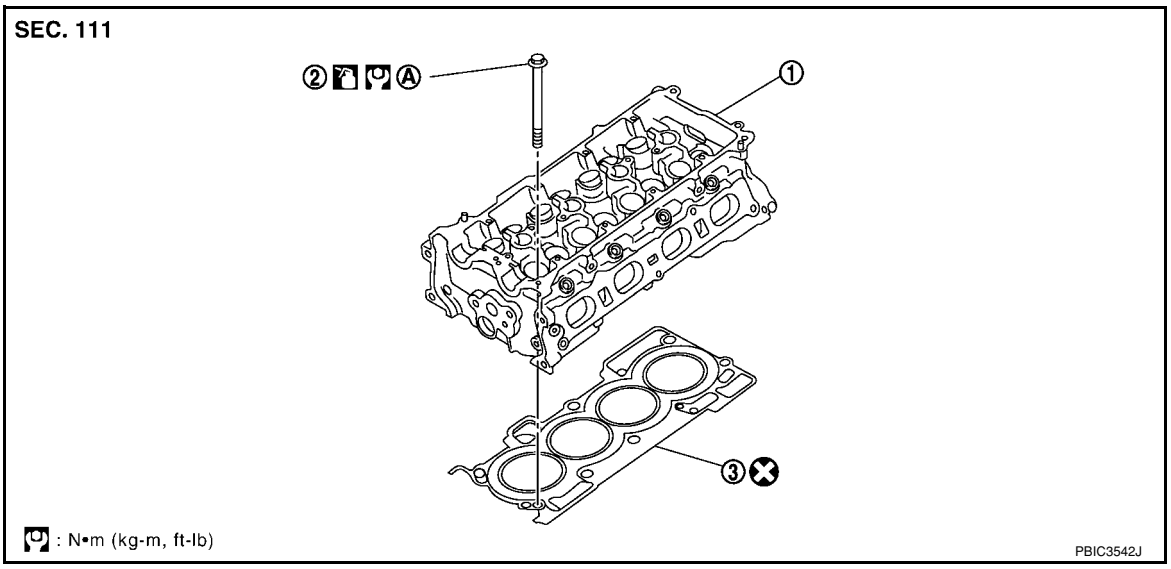

1. Cylinder head assembly
2. Cylinder head bolt
3. Cylinder head gasket

A. Refer to EM-63

Removal and Installation

INFOID:0000000001702503

REMOVAL

WARNING:

- **Put a "CAUTION: FLAMMABLE" sign in the workshop.**
- **Be sure to work in a well ventilated area and furnish workshop with a CO_2 fire extinguisher.**
- **Do not smoke while servicing fuel system. Keep open flames and sparks away from the work area.**

1. Release the fuel pressure. Refer to EC-78, "Fuel Pressure Check".
2. Drain engine coolant and engine oil. Refer to CO-8 and LU-6.
3. Remove front fender protector (RH). Refer to EI-23.
4. Remove drive belt. Refer to EM-13, "Removal and Installation".
5. Remove the following components and related parts.
   - Exhaust manifold; Refer to EM-21.
   - Intake manifold; Refer to EM-18.
   - Fuel tube and fuel injector assembly; Refer to EM-33.

- Water outlet; Refer to CO-19.
- Rocker cover; Refer to EM-30.
- Front cover, timing chain; Refer to EM-37.
- Camshaft; Refer to EM-47.

6. Remove cylinder head.
   - Loosen bolts in reverse order as shown.

     ⇦ : Engine front

   - Using TORX socket (size E18), loosen cylinder head bolts.
7. Remove cylinder head gasket.

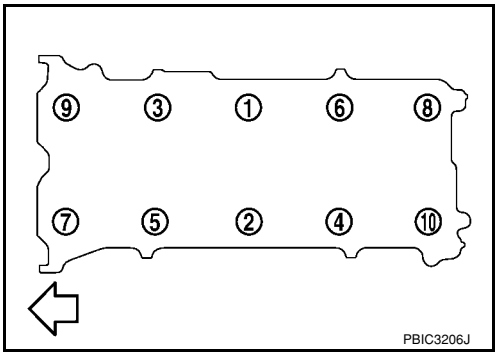

INSPECTION AFTER REMOVAL

Cylinder Head Bolts Outer Diameter

- Cylinder head bolts are tightened by plastic zone tightening method. Whenever the size difference between “d1” and “d2” exceeds the limit, replace them with a new one.

  Limit (“d1” – “d2”): 0.15 mm (0.0059 in)

- If reduction of outer diameter appears in a position other than “d2”, use it as “d2” point.

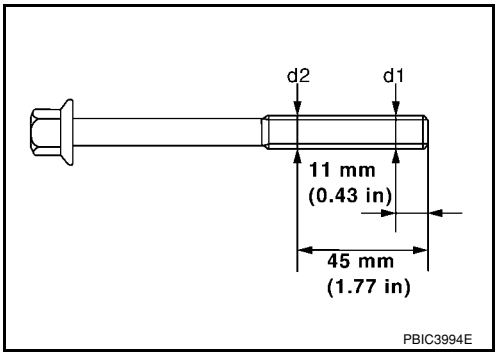

Cylinder Head Distortion

NOTE:

When performing this inspection, cylinder block distortion should be also checked. Refer to EM-93, "Inspection After Disassembly".

1. Wipe off engine oil and remove water scale (like deposit), gasket, sealant, carbon, etc. with a scraper.
   CAUTION:
   Use utmost care not to allow gasket debris to enter passages for engine oil or water.
2. At each of several locations on bottom surface of cylinder head, measure the distortion in six directions using straightedge (A) and feeler gauge (B).

   Limit: 0.1 mm (0.004 in)

   - If it exceeds the limit, replace cylinder head.

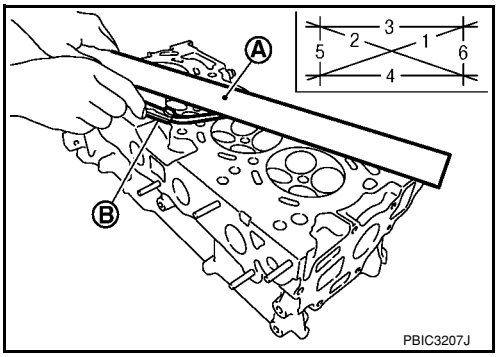

INSTALLATION

1. Install cylinder head gasket.
2. Apply new engine oil to threads and seating surface of bolts.
   CAUTION:
   If cylinder head bolts re-used, check their outer diameters before installation. Follow the "Cylinder Head Bolts Outer Diameter" procedure.

3. Install cylinder head, follow the steps below to tighten cylinder head bolts in numerical order as shown.

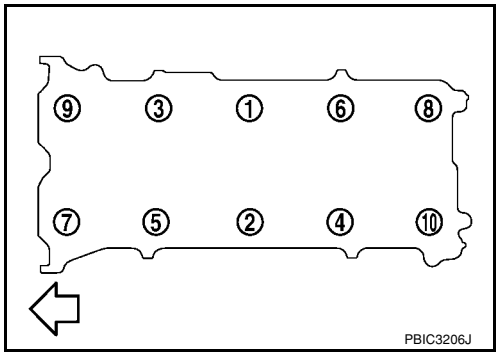

Step a : 40 N·m (4.1 kg-m, 30 ft-lb)
Step b : 100° clockwise
Step c : Loosen to 0 N·m in the reverse order of tightening.
Step d : 40 N·m (4.1 kg-m, 30 ft-lb)
Step e : 100° clockwise
Step f : 100° clockwise

⇦: Engine front

CAUTION:
Check and confirm the tightening angle by using Tool (A) or protractor. Never judge by visual inspection without the tool.

Tool number : KV10112100 (BT-8653-A)

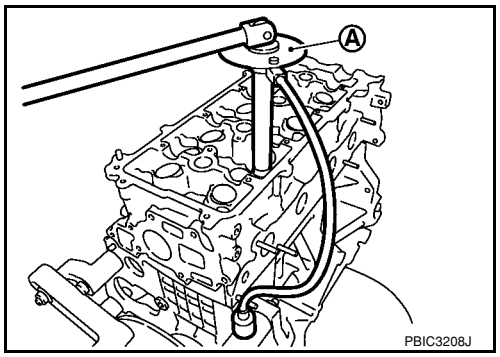

4. Installation of the remaining components is in the reverse order of removal.

Component

INFOID:0000000001702504

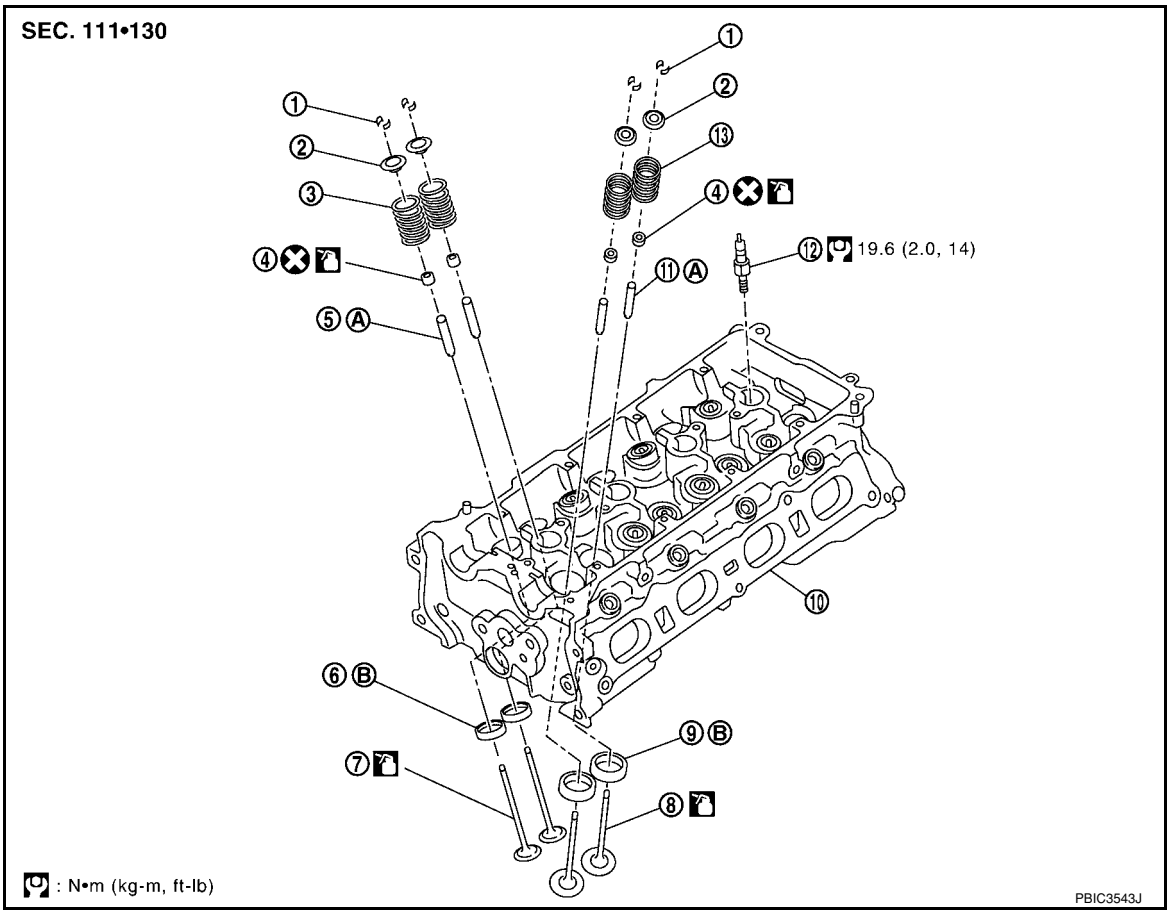

1. Valve collet	2. Valve spring retainer	3. Valve spring (EXH) (with valve spring seat)
4. Valve oil seal	5. Valve guide (EXH)	6. Valve seat (EXH)
7. Valve (EXH)	8. Valve (INT)	9. Valve seat (INT)
10. Cylinder head	11. Valve guide (INT)	12. Spark plug
13. Valve spring (INT) (with valve spring seat)		
A. Refer to EM-67	B. Refer to EM-67	

Disassembly and Assembly

INFOID:0000000001702505

DISASSEMBLY

1. Remove spark plug using suitable tool.
2. Remove valve lifter.
   - Identify installation positions, and store them without mixing them up.
3. Remove valve collet.
   - Compress valve spring using Tool, attachment and adapter (A). Remove valve collet using a suitable magnet hand.

   CAUTION:
   When working, be careful not to damage valve lifter holes.

   Tool number : KV101092S0 (J-26336-B)

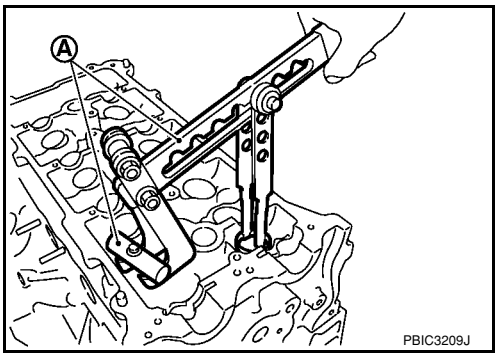

4. Remove valve spring retainer and valve spring (with valve spring seat).

   CAUTION:
   Never remove valve spring seat from valve spring.
5. Push valve stem to combustion chamber side, and remove valve.

   NOTE:
   Identify installed positions, and store them without mixing them up.
6. Remove valve oil seal using Tool (A).

   Tool number : KV10107902 (J-38959)

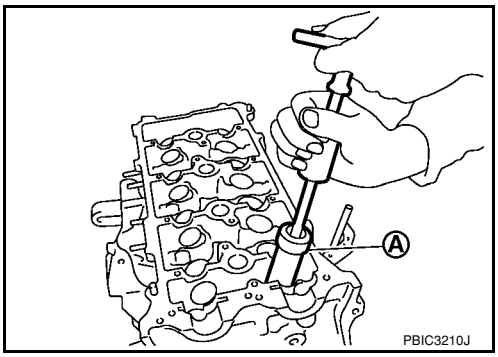

7. When valve seat must be replaced, refer to EM-67, "Inspection After Disassembly" to removal.
8. When valve guide must be replaced, refer to EM-67, "Inspection After Disassembly" to removal.

ASSEMBLY

1. Install valve guide if removed. Refer to EM-67, "Inspection After Disassembly".
2. Install valve seat if removed. Refer to EM-67, "Inspection After Disassembly".

3. Install valve oil seal.
   - Install with a valve oil seal using Tool (A) to match dimension as shown.

Tool number : KV10115600 (J-38958)

NOTE:
Dimension “H” is height that measured before installing valve spring (with valve spring seat).

Height “H” : 15.1 - 15.7 mm (0.594 - 0.618 in)

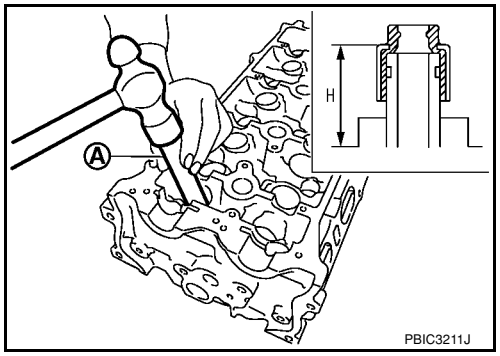

4. Install valve.
   - Install larger diameter to intake side.

5. Install valve spring (with valve spring seat).
   - Install smaller pitch (valve spring seat side) to cylinder head side (B).
   - Confirm identification color (A) of valve spring.

1 : Valve spring seat (Do not remove from valve spring.)

Intake : White
Exhaust : Orange

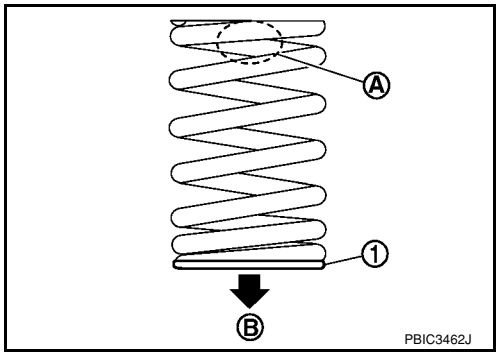

6. Install valve spring retainer.
7. Install valve collet.
   - Compress valve spring using Tool (A). Install valve collet with a magnet hand.

Tool number : KV101092S0 (J-26336 B)

CAUTION:
When working, be careful not to damage valve lifter holes.
- Tap valve stem edge lightly with a plastic hammer after installation to check its installed condition.

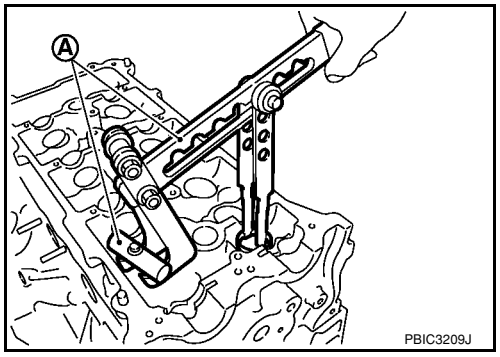

8. Install valve lifter.
   - Install it in the original position.
9. Install spark plug using suitable tool.

Inspection After Disassembly

INFOID:0000000001702506

VALVE DIMENSIONS

- Check dimensions of each valve. For dimensions, refer to EM-104, "Standard and Limit".
- If dimensions are out of the standard, replace valve.

VALVE GUIDE CLEARANCE

Valve Stem Diameter

Measure the diameter of valve stem with a micrometer (A).

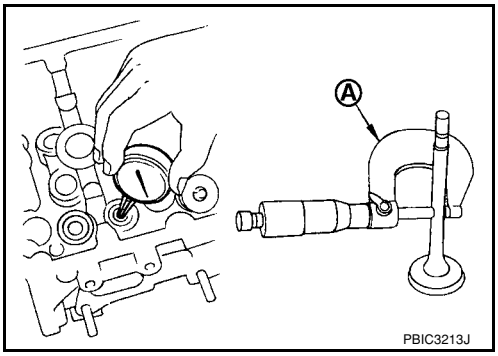

Standard

Intake : 5.465 - 5.480 mm (0.2152 - 0.2157 in)

Exhaust : 5.455 - 5.470 mm (0.2148 - 0.2154 in)

Valve Guide Inner Diameter

Measure the inner diameter of valve guide with a bore gauge.

Standard

: 5.500 - 5.518 mm (0.2165 - 0.2172 in)

Valve Guide Clearance

(Valve guide clearance) = (Valve guide inner diameter) – (Valve stem diameter).

Valve guide clearance:

Standard

Intake : 0.020 - 0.053 mm (0.0008 - 0.0021 in)

Exhaust : 0.030 - 0.063 mm (0.0012 - 0.0025 in)

Limit

: 0.1 mm (0.004 in)

- If it exceeds the limit, replace valve guide and/or valve.

VALVE GUIDE REPLACEMENT

When valve guide is removed, replace with oversized [0.2 mm (0.008 in)] valve guide.

1. To remove valve guide, heat cylinder head to 110° to 130°C (230° to 266°F) by soaking in heated oil (A).

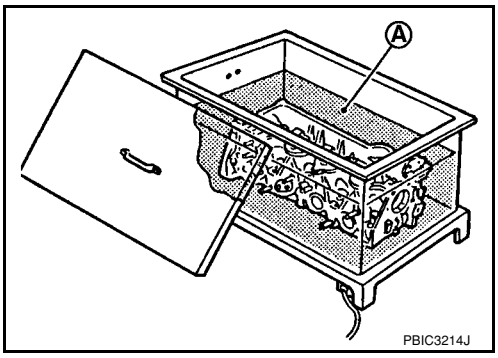

2. Drive out valve guide using suitable tools.

   CAUTION:

   Cylinder head contains heat, when working, wear protective equipment to avoid getting burned.

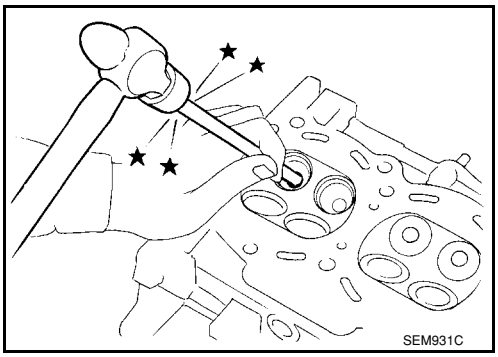

3. Ream cylinder head valve guide hole using suitable tool (A).

Valve guide hole diameter (for service parts):
: 9.675 - 9.696 mm (0.3809 - 0.3817 in)

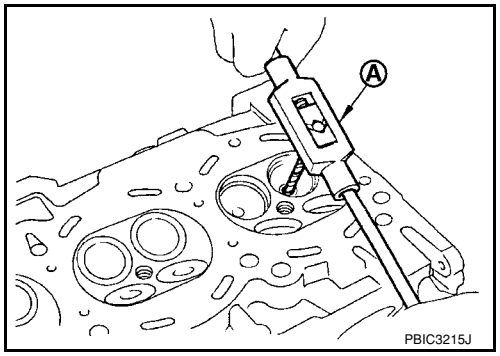

4. Heat cylinder head to 110° to 130°C (230° to 266°F) by soaking in heated oil (A).

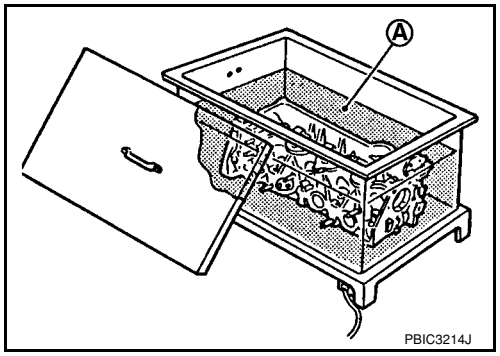

5. Press valve guide (1) from camshaft side to dimensions as shown.

2 : Cylinder head

Projection "H" : 13.35 - 13.65 mm (0.526 - 0.537 in)

CAUTION:
Cylinder head contains heat, when working, wear protective equipment to avoid getting burned.

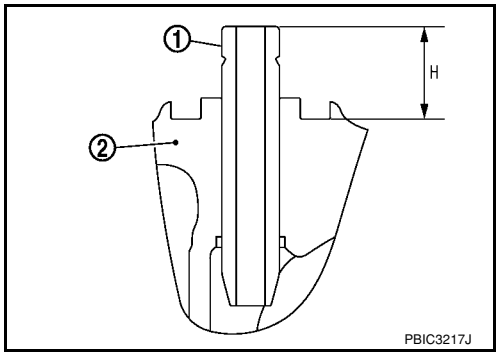

6. Apply reamer finish to valve guide using suitable tool (A).

Standard
: 5.500 - 5.518 mm (0.2165 - 0.2172 in)

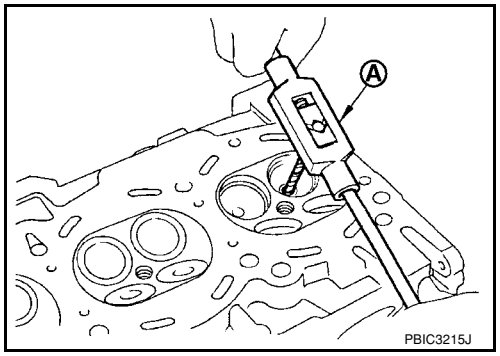

VALVE SEAT CONTACT

- After confirming that the dimensions of valve guides and valves are within specifications, perform this procedure.
- Apply prussian blue (or white lead) onto contacting surface of valve seat to check the condition of the valve contact on the surface.

- Check if the contact area band is continuous all around the circumference.
- If not, grind to adjust valve fitting and check again. If the contacting surface still has NG conditions even after the re-check, replace valve seat.

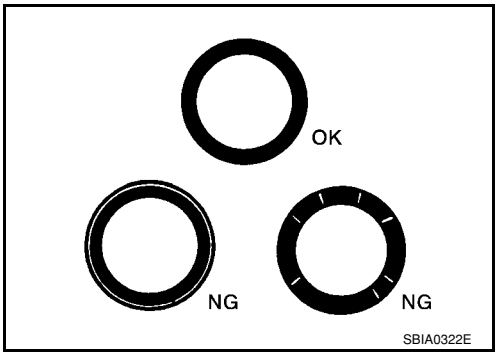

VALVE SEAT REPLACEMENT

When valve seat is removed, replace with oversized [0.5 mm (0.020 in)] valve seat.

1. Bore out old seat until it collapses. Boring should not continue beyond the bottom face of the seat recess in cylinder head. Set the machine depth stop to ensure this. Refer to EM-104, "Standard and Limit".
2. Ream cylinder head (1) recess diameter for service valve seat.

   2 : Valve seat

   Oversize [0.5 mm (0.020 in)]

   Intake : 35.200 - 35.227 mm (1.3858 - 1.3869 in)

   Exhaust : 29.200 - 29.227 mm (1.1496 - 1.1507 in)

   - Be sure to ream in circles concentric to the valve guide center. This will enable valve seat to fit correctly.

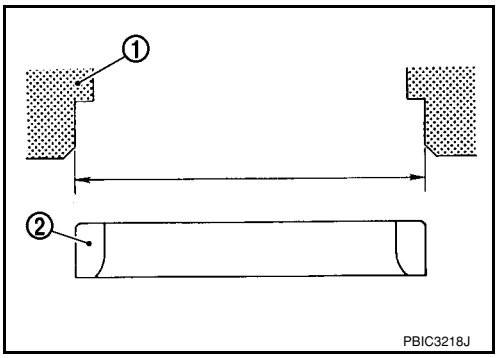

3. Heat cylinder head to 110° to 130°C (230° to 266°F) by soaking in heated oil (A).

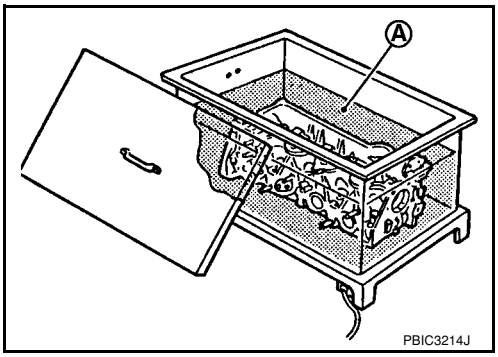

4. Provide valve seats cooled well with dry ice. Press-fit valve seat into cylinder head.
   CAUTION:
   - **Never touch cold valve seats directly.**
   - **Cylinder head contains heat, when working, wear protective equipment to avoid getting burned.**
5. Using valve seat cutter set or valve seat grinder, finish valve seat to the specified dimensions. For dimensions, refer to EM-104, "Standard and Limit".
   CAUTION:
   When using valve seat cutter, firmly grip the cutter handle with both hands. Then, press on the contacting surface all around the circumference to cut in a single drive. Improper pressure on with the cutter or cutting many different times may result in stage valve seat.

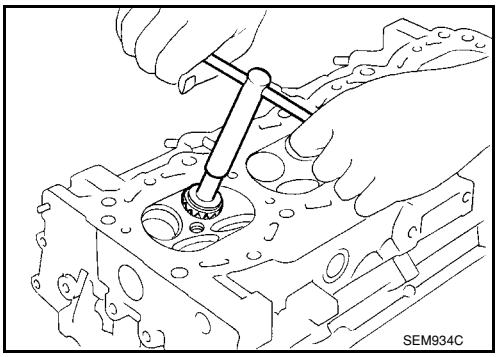

6. Using compound, grind to adjust valve fitting.
7. Check again for normal contact. Follow the "VALVE SEAT CONTACT" procedure.

VALVE SPRING SQUARENESS

- Set try square along the side of valve spring and rotate the spring. Measure the maximum clearance between the top of valve spring and try square.
  CAUTION:
  Never remove valve spring seat from valve spring.

  Limit: 1.9 mm (0.075 in)

- If it exceeds the limit, replace valve spring (with valve spring seat).

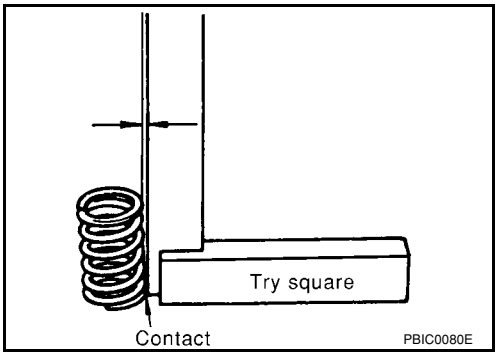

VALVE SPRING DIMENSIONS AND VALVE SPRING PRESSURE LOAD

- Check valve spring pressure with valve spring seat installed at the specified spring height.
  CAUTION:
  Never remove valve spring seat from valve spring.

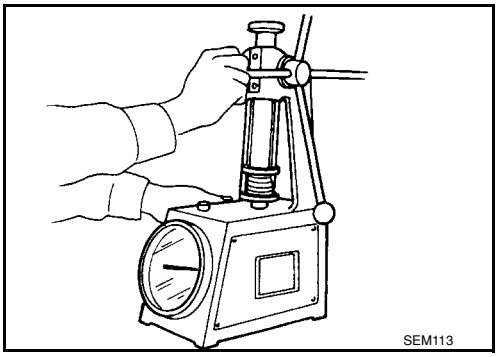

Standard:

Items	Intake	Exhaust
Free height	44.90 - 45.10 mm (1.7677 - 1.7755 in)	45.74 - 45.94 mm (1.8007 - 1.8086 in)
Installation height	35.30 mm (1.390 in)	35.30 mm (1.390 in)
Installation load	153 - 173 N (15.6 - 17.6 kg, 34 - 39 lb)	139 - 157 N (14.2 - 16 kg, 10 - 35 lb)
Height during valve open	26.36 mm (1.0377 in)	27.80 mm (1.0944 in)
Load with valve open	335 - 377 N (34.2 - 38.5 kg, 75 - 85 lb)	266 - 297 N (27.1 - 3.03 kg, 60 - 67 lb)
Identification color	White	Orange

- If the installation load or load with valve open is out of the standard, replace valve spring (with valve spring seat).

ENGINE ASSEMBLY

Component

INFOID:0000000001702507

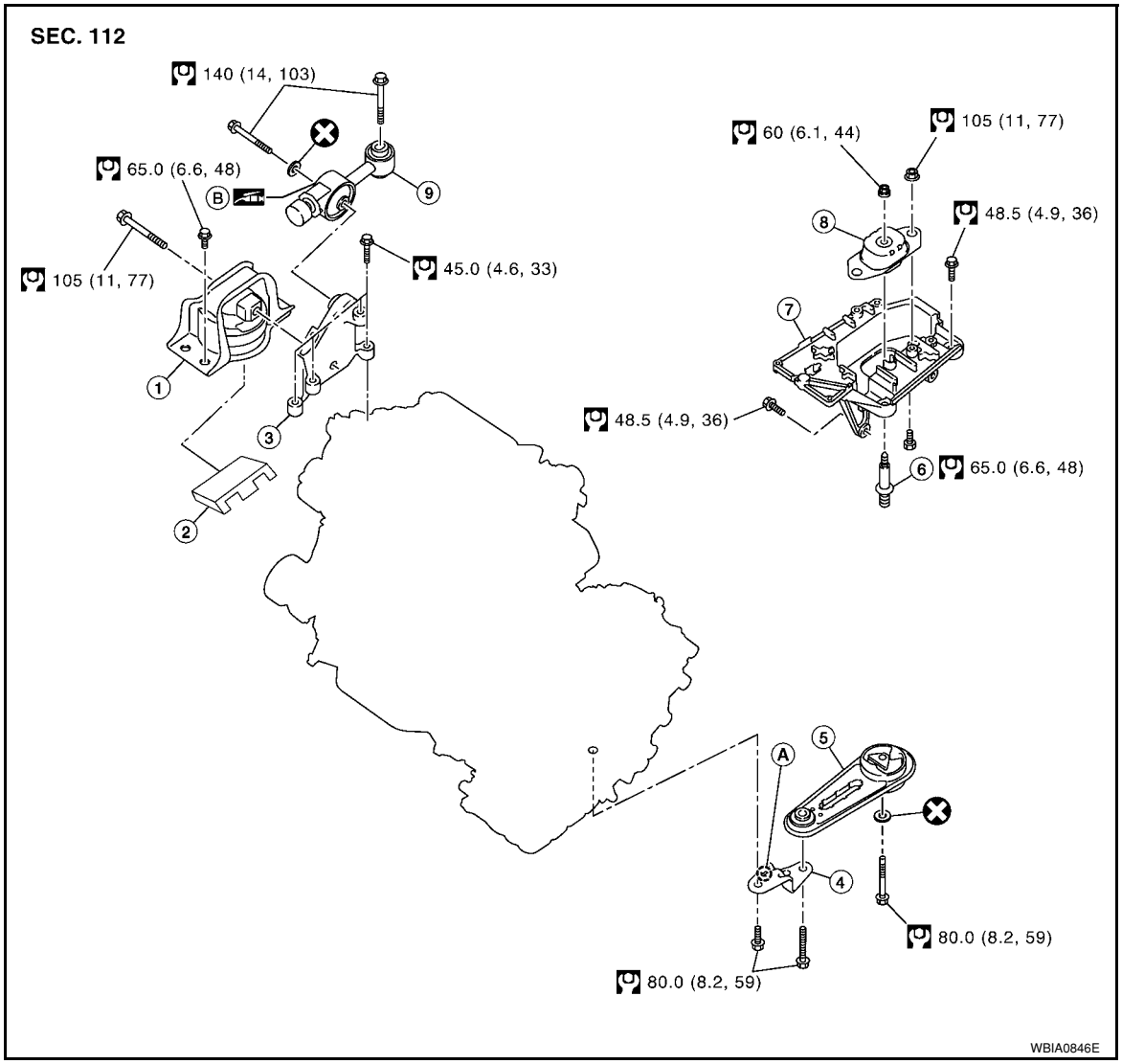

1.	Engine mounting Insulator (RH)	2.	Engine mounting shim (RH) (if equipped)	3.	Engine mounting bracket (RH)
4.	Bracket	5.	Rear torque rod	6.	Engine through bolt
7.	Engine mounting bracket (LH)	8.	Engine mounting insulator (LH)	9.	Torque rod (RH)
A.	Front mark	B.	Silicone lubricant		

Removal and Installation

INFOID:0000000001702508

WARNING:
- **Situate the vehicle on a flat and solid surface.**
- **Place chocks at front and back of rear wheels.**
- **Attach proper slingers and bolts described in PARTS CATALOG if engine slingers are not equipped.**

CAUTION:
- **Always be careful to work safely, avoid forceful or uninstructed operations.**
- **Do not start working until exhaust system and coolant are cool enough.**
- **If items or work required are not covered by the engine section, follow the applicable procedures.**
- **Always use the support point specified for lifting.**

- **Use either 2-pole lift type or separate type lift as best you can. If board-on type is used for unavoidable reasons, support at the rear axle jacking point with a transmission jack or similar tool before starting work, in preparation for the backward shift of center of gravity.**
- **For supporting points for lifting and jacking point at rear axle, refer to GI-38, "Garage Jack and Safety Stand and 2-Pole Lift".**

REMOVAL

Remove the engine and the transaxle assembly from the vehicle downward. Separate the engine and the transaxle.

1. Remove engine undercover
2. Drain engine coolant from radiator. Refer to CO-8, "Changing Engine Coolant".
   CAUTION:
   - **Perform this step when the engine is cold.**
   - **Do not spill engine coolant on drive belt.**
3. Remove front fender protector (RH and LH); Refer to EI-23.
4. Remove exhaust front tube; Refer to EX-4.
5. Remove drive shafts (LH and RH) from steering knuckle. Refer to FAX-8.
6. Remove transaxle joint bolts which pierce at oil pan (upper) lower rear side. Refer to AT-226 (A/T models), CVT-178 (CVT) or MT-16 (M/T models).
7. Remove rear torque rod (1).
   NOTE:
   A/T model shown CVT and M/T models similar.

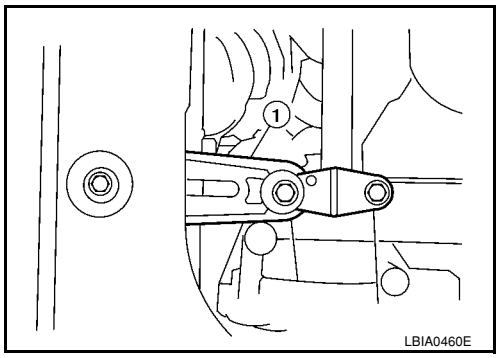

8. Remove hood assembly. Refer to BL-13.
9. Remove cowl top cover and cowl top extension assembly. Refer to EI-21.
10. Release fuel pressure. Refer to EC-78, "Fuel Pressure Check".
11. Remove battery and battery tray; Refer to SC-4.
12. Remove drive belt; Refer to EM-13, "Component".
13. Remove air duct and air cleaner case assembly; Refer to EM-16.
14. Remove cooling fan assembly.
15. Remove radiator hose (upper and lower). Refer to CO-11.
16. Disconnect A/T, CVT fluid cooler hoses. Refer to CO-11.
17. Disconnect all connections of engine harness around the engine mounting insulator (LH), and then temporarily secure the engine harness into the engine side.
    CAUTION:
    Protect connectors using a resin bag to protect against foreign materials during the operation.
18. Disconnect fuel feed hose at engine side. Refer to EM-33, "Component".
19. Disconnect heater hoses, and install plugs them to prevent engine coolant from draining. Refer to CO-19, "Component".
20. Disconnect control cable from transaxle. Refer to CVT-167 (CVT) or AT-203 (A/T), MT-13 (MT).
21. Remove ground cable at transaxle side.
22. Remove ground cable between front cover and vehicle.
23. Remove generator. Refer to SC-20.
24. Remove A/C compressor with piping connected from the engine. Temporarily secure it on the vehicle side with a rope to avoid putting load on it. Refer to MTC-78, "Removal and Installation of Compressor".
25. Remove the intake manifold to prevent the hanging chain from interfering. Refer to EM-18, "Component".

26. Install engine slinger to cylinder head front left side (A) and rear right side (B) and support the engine position with a hoist.

    ⇦ : Engine front

    Slinger bolts : 25.5 N·m (2.6 kg-m, 19 ft-lb)

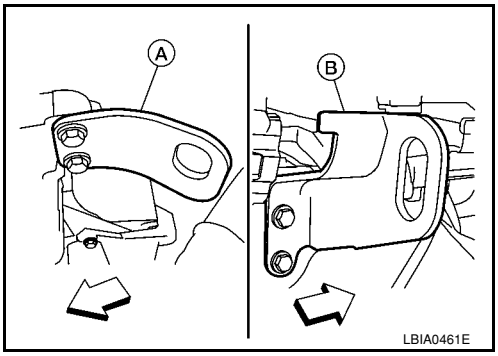

27. Support engine and transaxle assembly with a hoist and secure the engine in appropriate position.
28. Use a manual lift table caddy (A) or equivalently rigid tool such as a transmission jack. Securely support bottom of the engine and the transaxle, and simultaneously adjust hoist tension.
    CAUTION:
    Put a piece of wood or something similar as the supporting surface, secure a completely stable condition.

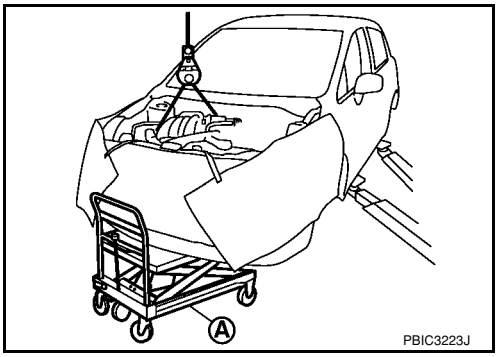

29. Remove torque rod (RH) (1), engine insulator (RH) (2) and engine bracket (RH) (3).

    4 : Engine insulator (LH)
    A : Engine front side
    B : Transaxle side

30. Remove engine through bolt-securing nut (C).

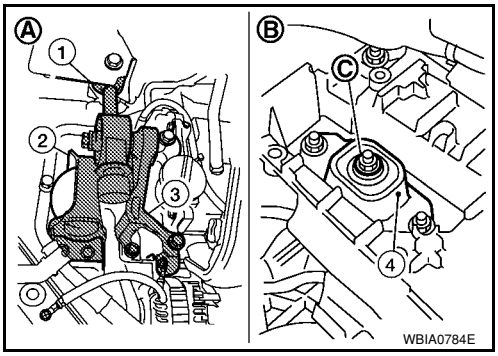

31. Remove the engine and the transaxle assembly from the vehicle downward by carefully operating supporting tools.
    CAUTION:
    - **During the operation, make sure that no part interferes with the vehicle side.**
    - **Before and during this lifting, always check if any harnesses are left connected.**
    - **During the removal operation, always be careful to prevent the vehicle from falling off the lift due to changes in the center of gravity.**
    - **If necessary, support the vehicle by setting jack or suitable tool at the rear.**
    - **During operation, securely support the engine by placing a piece of wood under the engine oil pan and transaxle oil pan. Securely support the engine slingers with a hoist.**
32. When the engine hoisting is not performed simultaneously, install engine slinger to cylinder head front left side and rear right side. Refer to EM-72, "Component".
33. Remove starter motor. Refer to SC-8.
34. Lift with a hoist and position above engine.
35. Separate the engine and the transaxle. Refer to AT-226 (A/T models), CVT-178 (CVT models) or MT-16 (M/T models).

INSTALLATION

Note the following, and install in the reverse order of removal.

- Do not allow engine oil to get on engine mounting insulator. Be careful not to damage engine mounting insulator.

- When installation directions are specified, install parts according to the directions. Refer to EM-72, "Component".
- Prior to installing the upper torque rod, apply a light coat of silicone lubricant (A) to the washer facing side of the bushing inner tube as shown.
  NOTE:
  - Apply silicone lubricant (A) by dabbing the outward facing tube surface with a sponge or suitable tool.
  - Do not apply excess lubricant.

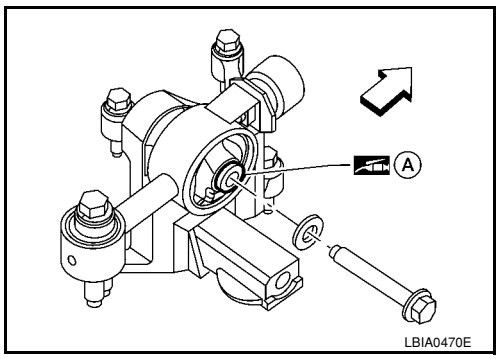

⇦ : Vehicle front

- Make sure that each mounting insulator is seated properly, and tighten nuts and bolts.
- Tighten engine mounting insulator (RH) bolts in the numerical order shown.

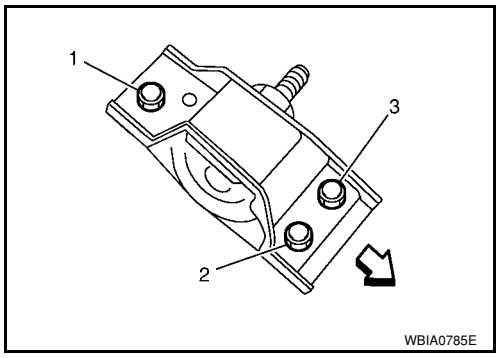

⇦ : Vehicle front

INSPECTION AFTER INSTALLATION

Inspection for Leaks

The following are procedures for checking fluids leak, lubricates leak and exhaust gases leak.

- Before starting engine, check oil/fluid levels including engine coolant and engine oil. If less than required quantity, fill to the specified level. Refer to MA-10.
- Use procedure below to check for fuel leakage.
- Turn ignition switch “ON” (with engine stopped). With fuel pressure applied to fuel piping, check for fuel leakage at connection points.
- Start engine. With engine speed increased, check again for fuel leakage at connection points.
- Run engine to check for unusual noise and vibration.
- Warm up engine thoroughly to make sure there is no leakage of fuel, exhaust gases, or any oil/fluids including engine oil and engine coolant.
- Bleed air from lines and hoses of applicable lines, such as in cooling system.
- After cooling down engine, again check oil/fluid levels including engine oil and engine coolant. Refill to the specified level, if necessary.

Summary of the inspection items:

Item	Before starting engine	Engine running	After engine stopped
Engine coolant	Level	Leakage	Level
Engine oil	Level	Leakage	Level
Other oils and fluid*	Level	Leakage	Level
Fuel	Leakage	Leakage	Leakage
Exhaust gases	—	Leakage	—

* Transmission/transaxle/CVT fluid, power steering fluid, brake fluid, etc.

CYLINDER BLOCK

Component

INFOID:0000000001702509

SEC. 110•120•150•221•226•253

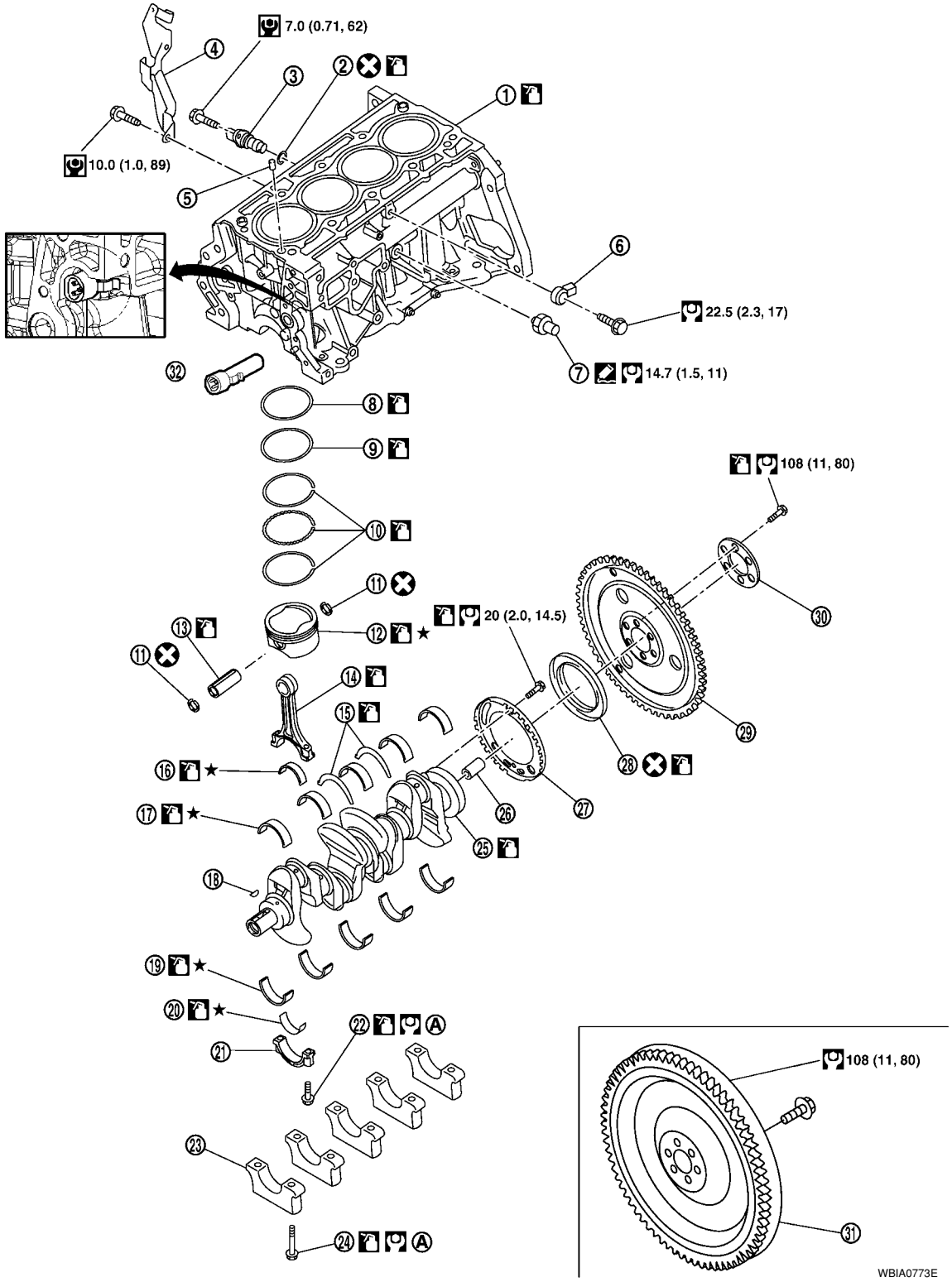

1.	Cylinder block	2.	O-ring	3.	Crankshaft position sensor (POS)
4.	Crankshaft position sensor (POS) cover	5.	Oil filter (for intake valve timing control)	6.	Knock sensor

7. Oil pressure switch	8. Top ring	9. Second ring
10. Oil ring	11. Snap ring	12. Piston
13. Piston pin	14. Connecting rod	15. Thrust bearing
16. Connecting rod bearing upper	17. Main bearing upper	18. Crankshaft key
19. Main bearing lower	20. Connecting rod bearing lower	21. Connecting rod bearing cap
22. Connecting rod bolt	23. Main bearing cap	24. Main bearing cap bolt
25. Crankshaft	26. Pilot converter (A/T or CVT models)	27. Signal plate
28. Rear oil seal	29. Drive plate (A/T or CVT models)	30. Reinforcement plate (A/T or CVT models)
31. Flywheel (M/T models)	32. Block heater (Canada only)	A. Refer to EM-77

Disassembly and Assembly

INFOID:0000000001702510

DISASSEMBLY

1. Remove engine and transaxle assembly from vehicle, separate transaxle from engine. Refer to EM-72.
2. Install engine to engine stand as follows;

a. Remove flywheel (M/T models) or drive plate (1) (A/T or CVT models).
   - Secure flywheel (M/T models) or drive plate (A/T or CVT models) using Tool (A), and remove bolts.

Tool number : KV 11105210 (J-44716)

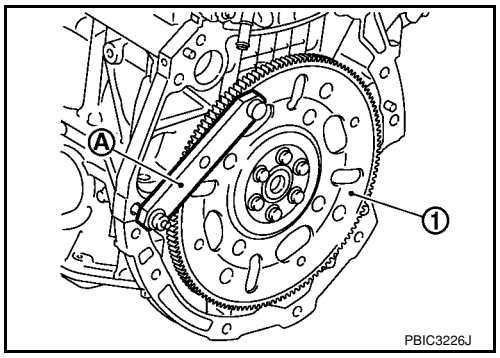

CAUTION:
Be careful not to damage or scratch drive plate (A/T or CVT models) and contact surface for clutch disc of flywheel (M/T models).
NOTE:
Figure shows drive plate (A/T or CVT models)

b. Lift the engine with a hoist to install it onto widely use engine stand.
CAUTION:
- **Use the engine stand that has a load capacity [approximately 135 kg (298 lb) or more] large enough for supporting the engine weight.**
- If the load capacity of stand is not adequate, remove the following parts beforehand to reduce the potential risk of overturning stand.
- Exhaust manifold; Refer to EM-21.
- Rocker cover; Refer to EM-30.

NOTE:
The figure shows an example of widely used engine stand (A) that can support mating surface of transaxle with flywheel (M/T models) or drive plate (A/T or CVT models) removed.

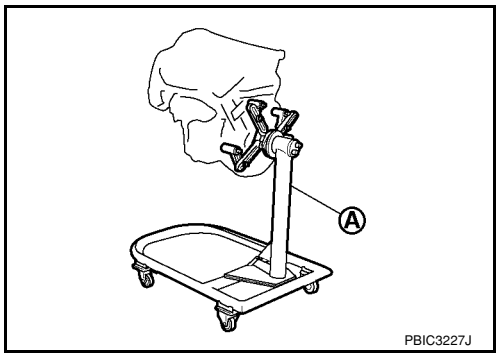

CAUTION:
Before removing the hanging chains, make sure the engine stand is stable and there is no risk of overturning.

3. Remove oil pan (upper and lower). Refer to EM-24.
4. Remove cylinder head. Refer to EM-62.
5. Remove thermostat housing. Refer to CO-17.
6. Remove knock sensor.
CAUTION:
Carefully handle knock sensor avoiding shocks.
7. Remove crankshaft position sensor (POS) cover and crankshaft position sensor (POS).

CAUTION:
- **Avoid impacts such as a dropping.**
- **Never disassemble.**
- **Keep it away from metal particles.**
- **Never place sensor in a location where it is exposed to magnetism.**

8. Remove oil filter (for intake valve timing control).
9. Remove pilot converter (1) using Tool (A). (A/T or CVT models)

   Tool number :ST16610001 (J-23907)

   NOTE:
   M/T models have no pilot converter.

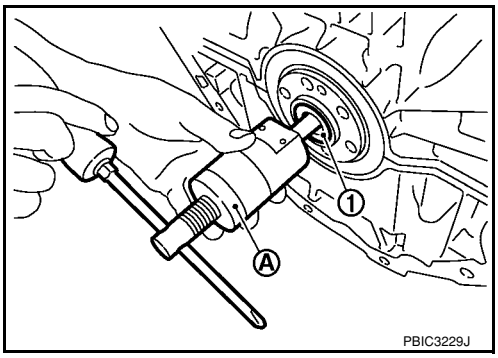

10. Position crankshaft pin corresponding to connecting rod to be removed onto the bottom dead center.
    NOTE:
    Before removing piston and connecting rod assembly, check the connecting rod side clearance. Refer to EM-93, "Inspection After Disassembly".
11. Remove connecting rod cap.
12. Using a suitable tool, push piston and connecting rod assembly out to the cylinder head side.
    CAUTION:
    - **Be careful not to damage matching surface with connecting rod cap.**
    - **Be careful not to damage the cylinder wall and crankshaft pin, resulting from an interference of the connecting rod big end.**

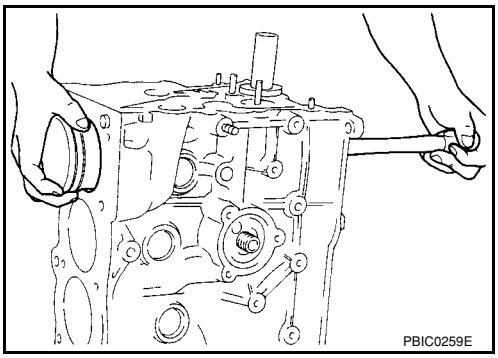

13. Remove connecting rod bearings.
    CAUTION:
    When removing them, note the installation position. Keep them in the correct order.
14. Remove piston rings form piston.
    - Before removing piston rings, check the piston ring side clearance. Refer to EM-93, "Inspection After Disassembly".
15. Using a suitable tool (A) remove piston rings.
    CAUTION:
    - **When removing piston rings, be careful not to damage the piston.**
    - **Be careful not to damage piston rings by expanding them excessively.**

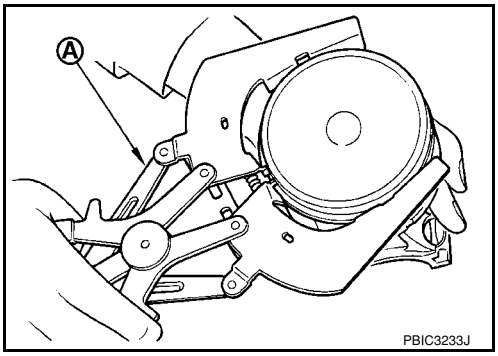

16. Using snap ring pliers (A), remove snap rings.

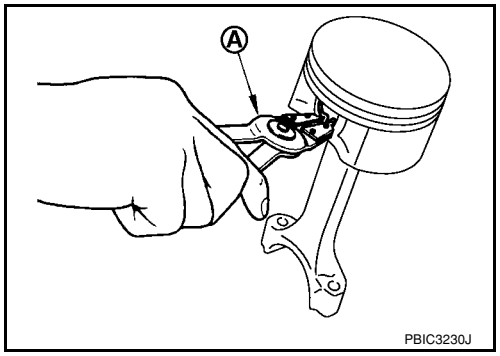

17. Heat piston to 60° to 70°C (140° to 158°F) using a suitable tool (A).

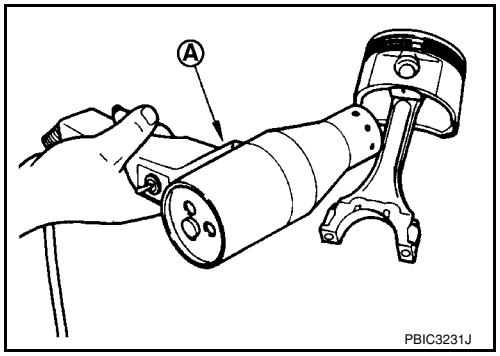

18. Push out piston pin using a suitable tool of an outer diameter approximately 18 mm (0.71 in).

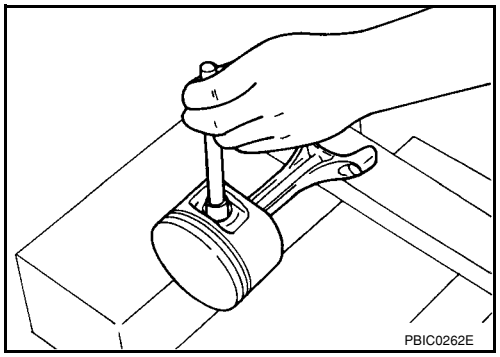

19. Loosen main bearing cap bolts in reverse order as shown, and remove them.
NOTE:
Before loosening main bearing cap bolts, measure crankshaft end play. Refer to EM-93, "Inspection After Disassembly".

⇦ : Engine front

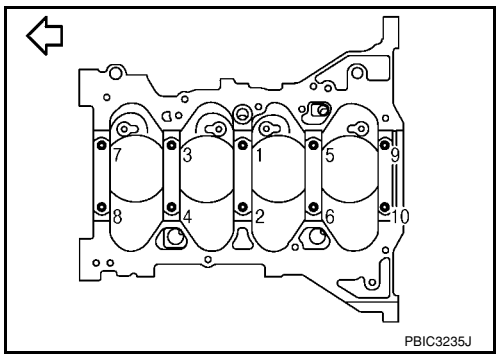

20. Remove main bearing caps.
- Tap main bearing caps lightly using a suitable tool for removal.
CAUTION:
Be careful not to damage the mounting surface.

21. Remove crankshaft.
CAUTION:

- **Be careful not to damage or deform signal plate (1) mounted on rear end of crankshaft (A).**
- **When setting crankshaft on a flat floor surface, use a block of wood to avoid interference between signal plate and the floor surface.**
- **Never remove signal plate unless it is necessary to do so.**

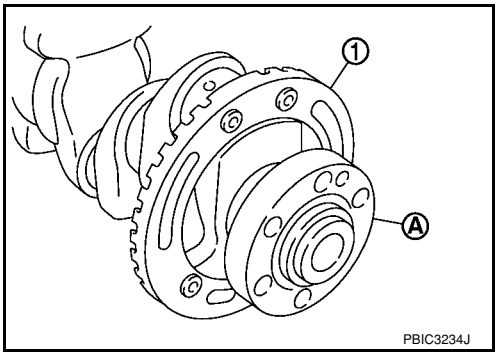

22. Pull rear oil seal out from rear end of crankshaft.
23. Remove main bearings and thrust bearings from cylinder block and main bearing caps.
    CAUTION:
    Identify installation positions, and store them without mixing them up.

ASSEMBLY

1. Fully air-blow engine coolant and engine oil passages in cylinder block, cylinder bore and crankcase to remove any foreign material.
   CAUTION:
   Use a goggles to protect your eye.
2. Install water drain plug (1) to cylinder block.

   ⇦ : Engine front

   - Apply liquid gasket to the drain plug thread.

   Use Genuine Silicone RTV Sealant or equivalent. Refer to GI-42, "Recommended Chemical Product and Sealant".

   9.8 N·m (1.0 kg-m, 87 in-lb)

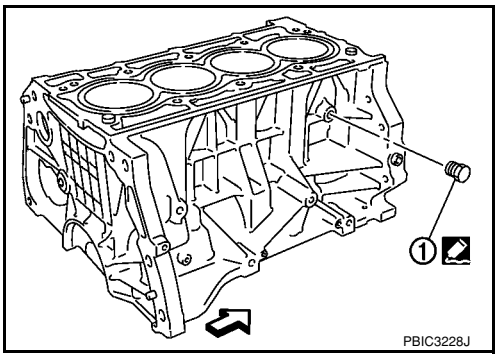

3. Remove dust, dirt, and engine oil on the bearing mating surfaces of cylinder block and main bearing cap.
4. Install thrust bearings to the both sides of the No. 3 journal housing (B) on cylinder block.

   ⇦ : Engine front

   - Install thrust bearings with the oil groove (A) facing crankshaft arm (outside).

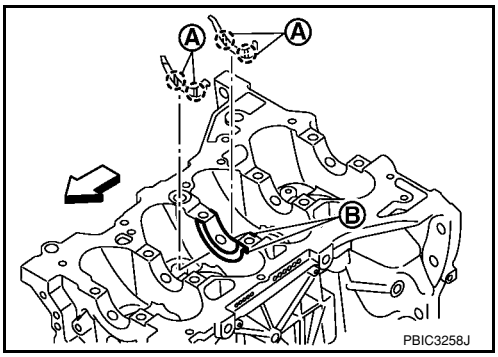

5. Install the main bearings paying attention to the direction.
   CAUTION:
   - **Before installing main bearings, apply new engine oil to the bearing surface (inside). Do not apply new engine oil to the back surface, but thoroughly clean it.**
   - **When installing, align main bearing to the center position of cylinder block and main bearing cap.**

- **The difference (A) between main bearing upper (1) and main bearing lower (3) should be 0.85 mm (0.033 in) or less when installing.**

  2 : Cylinder block
  4 : Main bearing cap

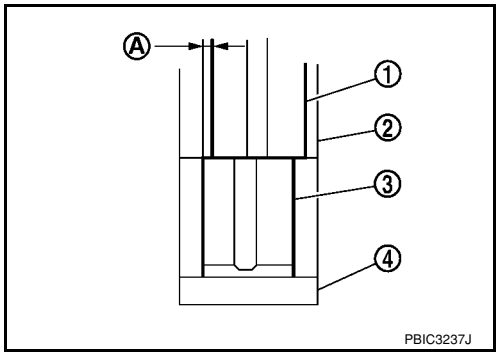

- **Ensure the oil holes on cylinder block and oil holes (A) on the main bearings (1) are aligned.**

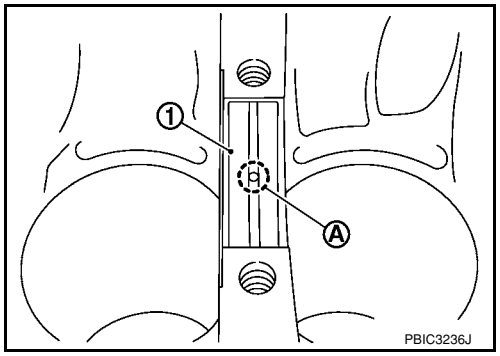

6. Install signal plate to crankshaft if removed.
7. Set the signal plate with the flange facing toward the counter weight side (engine front side) to the crankshaft rear surface.
8. Apply new engine oil to threads and seat surfaces of bolts.
9. Position crankshaft (2) and signal plate (1) using a dowel pin (service part), and tighten bolts in numerical order as shown.

   A : Dowel pin hole

   NOTE:
   Dowel pin of crankshaft and signal plate is provided as a set for each.

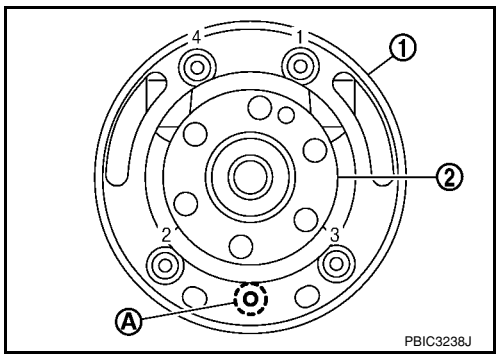

10. Tighten bolts in numerical order as shown.
11. Remove dowel pin. (service parts)
    CAUTION:
    Be sure to remove dowel pin.
12. Install crankshaft to cylinder block.
    - While turning crankshaft by hand, make sure that it turns smoothly.
13. Install main bearing caps referring to the journal No. stamp (A) and front mark (B) as shown.

    ⇦ : Engine front

    NOTE:
    Main bearing cap cannot be replaced as a single part, because it is machined together with cylinder block.

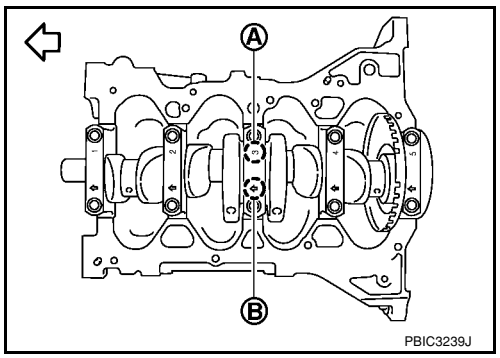

14. Apply new engine oil to threads and seat surfaces of bolts.

15. Tighten main bearing cap bolts in two steps.
    NOTE:
    Tighten main bearing cap bolts in numerical order as shown:

    ⇦ : Engine front

    Step 1 : 34.3 N·m (3.5 kg-m, 25 ft-lb)
    Step2 60° clockwise

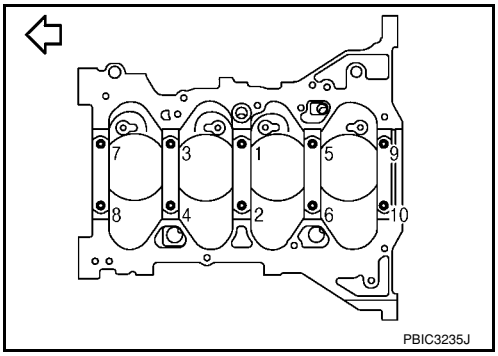

Tool number : KV10112100 (BT-8653-A)

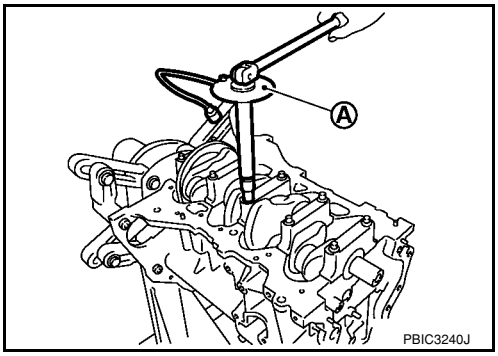

- After installing bolts, make sure that crankshaft can be rotated smoothly by hand.
- Check crankshaft end play. Refer to EM-93, "Inspection After Disassembly".

16. Using snap ring pliers, install new snap ring to the groove of the piston rear side.
    - Insert it fully into groove to install.
17. Assemble piston to connecting rod.
    - Using a suitable tool, heat the piston until the piston pin can be pushed in by hand without excess force [approximately 60° to 70 °C (140° to 158 °F)]. From the front to the rear, insert piston pin into piston and connecting rod.
    - Assemble so that the front mark (A) on the piston head and the oil hole (B) and the cylinder number (C) on connecting rod are positioned as shown.

    D : Big end diameter grade
    E : Small end diameter grade
    F : Front mark (connecting rod bearing cap)

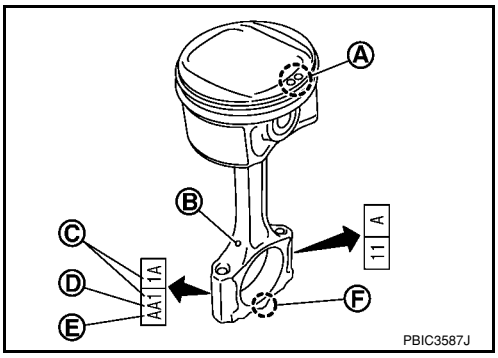

18. Install new snap ring to the groove of the piston front side.
    - Insert it fully into groove to install.
    - After installing, make sure that connecting rod moves smoothly.
19. Using a suitable tool, install piston rings.
    CAUTION:
    - **Be careful not to damage piston.**
    - **Be careful not to damage piston rings by expanding them excessively.**

- Position each ring with the gap as shown referring to the piston front mark.

  A : Oil ring upper or lower rail gap
  B : Front mark
  C : Second ring and oil ring spacer gap
  D : Top ring gap
  E : Stamped mark

  CAUTION:
  Never contact the rail end gap under the oil ring with the oil drain cast groove of piston.
- Install second ring with the stamped surface facing upward.

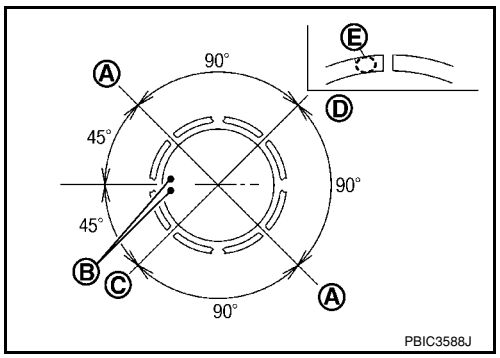

20. Install connecting rod bearing upper (2) and lower (3) to connecting rod (1) and connecting rod cap (4).

  C : Oil hole (connecting rod)
  D : Arrow view
  ⇦ : Engine front

- Install the connecting rod in the dimension shown.
- Make sure that connecting rod bearing oil hole (A) is completely in the inside of connecting rod oil hole chamfered area (B).
- When installing connecting rod bearings, apply new engine oil to the bearing surface (inside). Do not apply new engine oil to the back surface, but thoroughly clean it.
  NOTE:
  - There is no positioning tab.
  - Install the connecting rod bearings in the center of connecting rod and connecting rod bearing cap as shown. For service operation, the center position can be checked, visually.

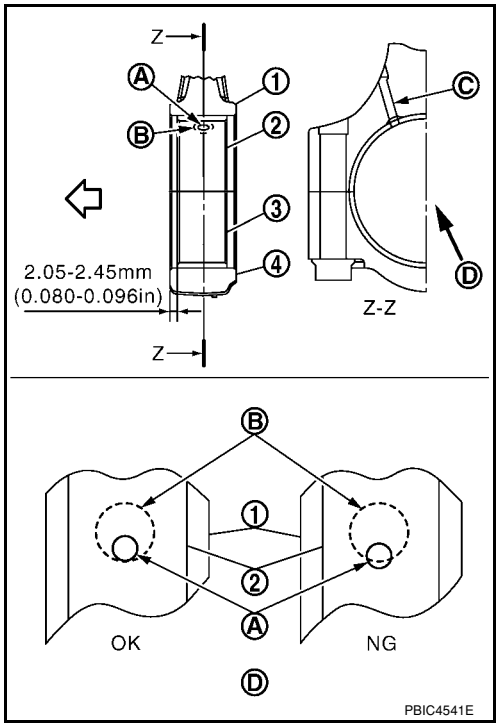

21. Install piston and connecting rod assembly to crankshaft.
  - Position crankshaft pin corresponding to connecting rod to be installed onto the bottom dead center.
  - Apply new engine oil sufficiently to the cylinder bore, piston and crankshaft pin.
  - Match the cylinder position with the cylinder number (C) on connecting rod to install.

    B : Oil hole
    D : Big end diameter grade
    E : Small end diameter grade
    F : Front mark (connecting rod bearing cap)

  - Install so that front mark (A) on the piston head faces the front of engine.

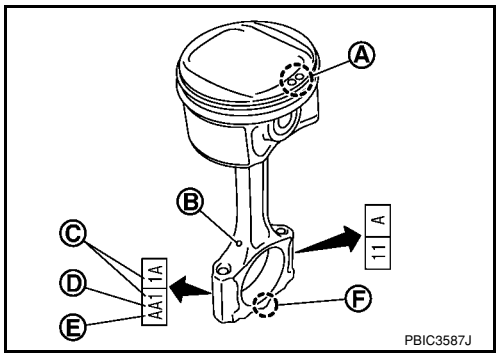

- Using a piston ring compressor [SST: EM03470000 (J-8037)] (A) or suitable tool, install piston with the front mark on the piston head facing the front of the engine.

  CAUTION:
  Be careful not to damage the cylinder wall and crankshaft pin, resulting from an interference of the connecting rod big end.

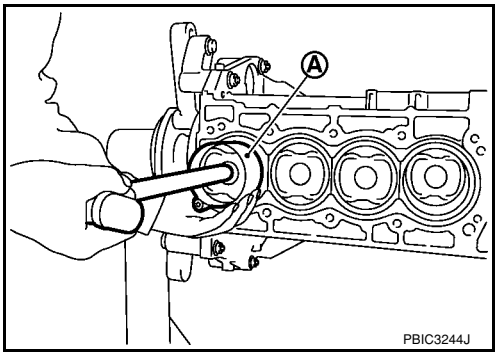

22. Install connecting rod cap.
    - Match the stamped cylinder number marks (C) on connecting rod with those on connecting rod cap to install.

    A : Front mark (piston)
    B : Oil hole
    D : Big end diameter grade
    E : Small end diameter grade
    F : Front mark (connecting rod bearing cap)

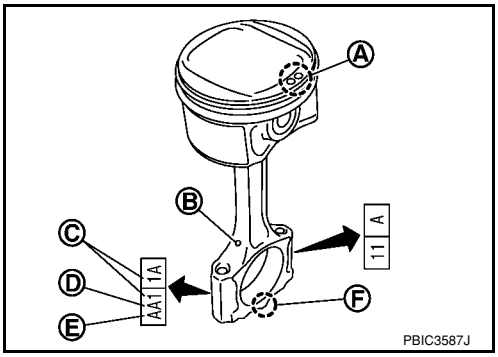

23. Tighten connecting rod bolt with the following procedure:

    CAUTION:
    - **Make sure that there is no gap in the thrust surface (A) of the joint between connecting rod (1) and connecting rod bearing cap (2) and that these parts are in the correct position. And then, tighten the connecting rod bolts.**
    - **If the connecting rod bolts are reused, measure the outer diameter. Refer to EM-93, "Inspection After Disassembly".**

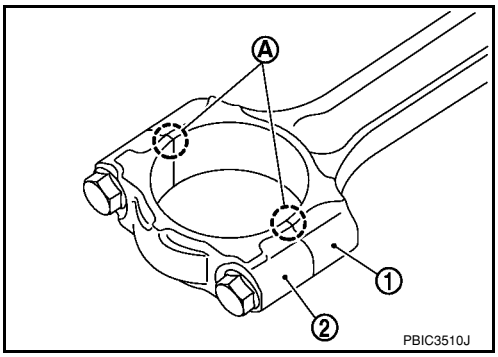

24. Apply new engine oil to the threads and seats of connecting rod bolts.
25. Tighten bolts in three steps

    Step 1 : 27.4 N·m (2.8 kg-m, 20 ft-lb)
    Step 2 : 0 N·m (0 kg-m, 0 ft-lb)
    Step 3 : 19.6 N·m (2.0 kg-m, 14 ft-lb)

- After tightening connecting rod bolt, make sure that crankshaft rotates smoothly.
- Check the connecting rod side clearance. Refer to EM-93, "Inspection After Disassembly".

26. Install oil pan (upper). Refer to EM-24.

    NOTE:
    Install the rear oil seal after installing the oil pan (upper).
27. Install rear oil seal. Refer to EM-24.
28. Install flywheel (M/T models) or drive plate (1) (A/T or CVT models).
    - Secure crankshaft using Tool. (A), and tighten bolts crosswise over several times.

    Tool number : KV11105210 (J-44716)

    NOTE:
    A/T model shown CVT and M/T similar.

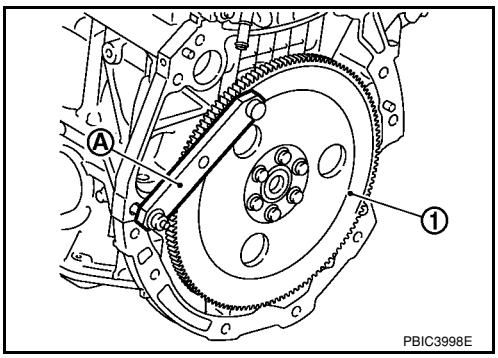

- Install pilot converter (1), drive plate (2) and reinforcement plate (3) as shown (A/T or CVT models).

  A : Crankshaft rear end
  B : R

- Using a suitable tool of 33 mm. (1.30 in) in diameter, press-fit pilot converter into the end of crankshaft until it stops (A/T or CVT models).
  NOTE:
  M/T models have no pilot converter and reinforcement plate.

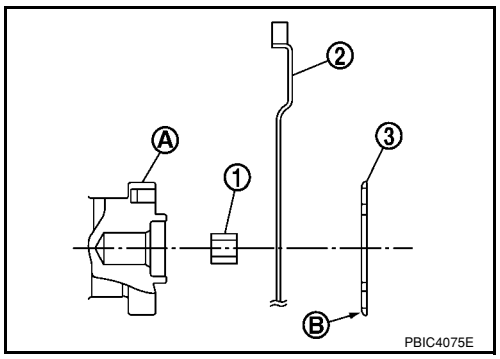

29. Install knock sensor (1) with connector facing toward the rear of engine.

    A : Cylinder block left side
    ⇦ : Engine front

    CAUTION:
    - **Never tighten bolts while holding the connector.**
    - **If any impact by dropping is applied to knock sensor, replace it with a new one.**

    NOTE:
    - Make sure that there is no foreign material on the cylinder block mating surface and the back surface of knock sensor.
    - Make sure that knock sensor does not interfere with other parts.

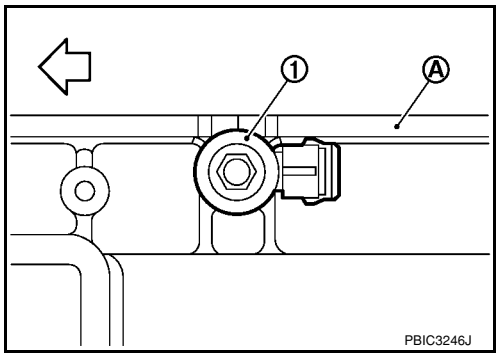

30. Install crankshaft position sensor (POS) and crankshaft position sensor (POS) cover.
    CAUTION:
    - **Avoid impacts such as a dropping.**
    - **Keep it away from metal particles.**
    - **Never place sensor in a location where it is exposed to magnetism.**

31. Install oil filter (for intake valve timing control) (1) in the direction shown.
    - Make sure that the oil filter does not protrude from the upper surface of cylinder block (2) after installation.

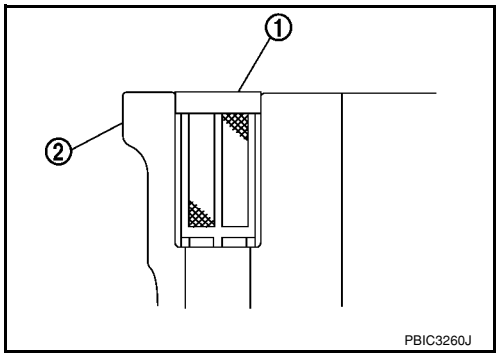

32. Assemble in the reverse order of disassembly.

How to Select Piston and Bearing

INFOID:0000000001702511

DESCRIPTION

Selection points	Selection parts	Selection items	Selection methods
Between cylinder block and crankshaft	Main bearing	Main bearing grade (bearing thickness)	Determined by match of cylinder block bearing housing grade (inner diameter of housing) and crankshaft journal grade (outer diameter of journal)
Between crankshaft and connecting rod	Connecting rod bearing	Connecting rod bearing grade (bearing thickness)	Combining service grades for connecting rod big end diameter and crankshaft pin outer diameter determine connecting rod bearing selection.
Between cylinder block and piston	Piston and piston pin assembly (piston is available together with piston pin as an assembly.)	Piston grade (piston outer diameter)	Piston grade = cylinder bore grade (inner diameter of bore)

- The identification grade stamped on each part is the grade for the dimension measured in new condition. This grade cannot apply to reused parts.
- For reused or repaired parts, measure the dimension accurately. Determine the grade by comparing the measurement with the values of each selection table.
- For details of the measurement method of each part, the reuse standards and the selection method of the selective fitting parts, follow the applicable procedures.

HOW TO SELECT PISTON

When New Cylinder Block is Used

- Check the cylinder bore grade on rear left side of cylinder block (L), and select piston of the same grade.

A : Correction stamp
B : Standard stamp
C : Cylinder No. 1 bore grade
D : Cylinder No. 2 bore grade
E : Cylinder No. 3 bore grade
F : Cylinder No. 4 bore grade
G : No. 1 main bearing housing grade
H : No. 2 main bearing housing grade
I : No. 3 main bearing housing grade
J : No. 4 main bearing housing grade
K : No. 5 main bearing housing grade
⇦ : Engine front

- If there is a correction stamp mark on the cylinder block, use it as a correct reference.

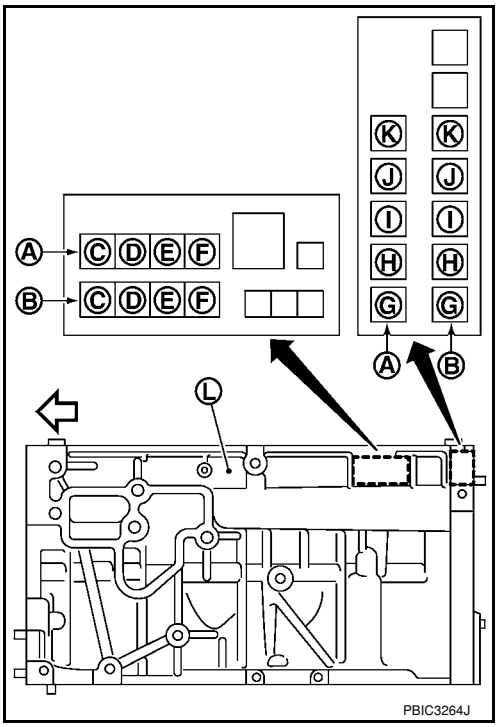

When Cylinder Block is Reused

1. Measure the cylinder bore inner diameter. Refer to EM-93, "Inspection After Disassembly".
2. Determine the bore grade by comparing the measurement with the values under the cylinder bore inner diameter of the “Piston Selection Table”.

3. Select piston of the same grade.

A : Identification code
B : Front mark
C : Piston grade number
D : Sub grade number

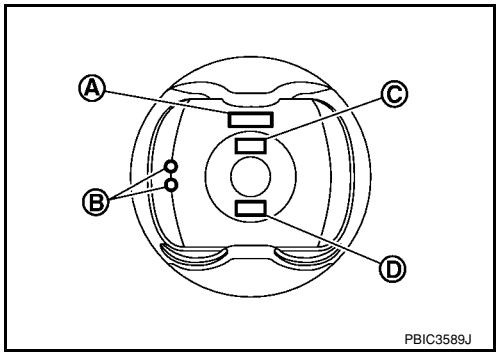

Piston Selection Table

Unit: mm (in)

Grade number (Mark)	1	2 [or no mark (piston only)]
Cylinder bore Inner diameter	84.000 - 84.010 (3.3071 - 3.3075)	84.010 - 84.020 (3.3075 - 3.3079)
Piston skirt diameter	83.970 - 83.980 (3.3059 - 3.3063)	83.980 - 83.990 (3.3063 - 3.3067)

NOTE:
- Piston is available together with piston pin as an assembly.
- There is no piston pin (piston pin hole) grade.

HOW TO SELECT CONNECTING ROD BEARING

When New Connecting Rod and Crankshaft are Used

1. Apply connecting rod big end diameter grade stamped (C) on connecting rod side face to the row in the “Connecting Rod Bearing Selection Table”.

A : Oil hole
B : Cylinder number
D : Small end diameter grade
E : Front mark

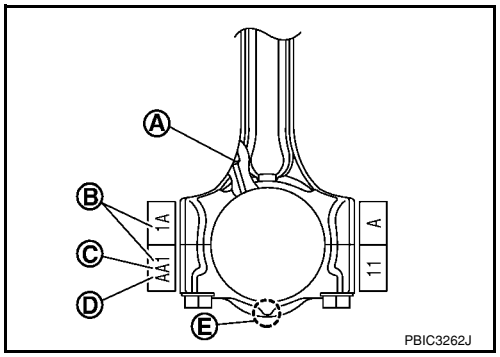

2. Apply crankshaft pin journal diameter grade stamped on crankshaft front side to the column in the “Connecting Rod Bearing Selection Table”.

A : No. 1 pin journal diameter grade
B : No. 2 pin journal diameter grade
C : No. 3 pin journal diameter grade
D : No. 4 pin journal diameter grade
E : No. 1 main journal diameter grade
F : No. 2 main journal diameter grade
G : No. 3 main journal diameter grade
H : No. 4 main journal diameter grade
I : No. 5 main journal diameter grade

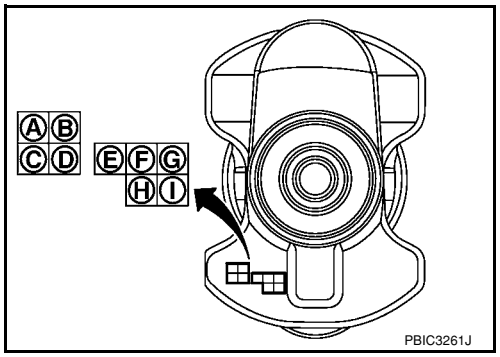

3. Read the symbol at the cross point of selected row and column in the “Connecting Rod Bearing Selection Table”.
4. Apply the symbol obtained to the “Connecting Rod Bearing Grade Table” to select connecting rod bearing.

When Crankshaft and Connecting Rod are Reused

1. Measure the dimensions of the connecting rod big end diameter and crankshaft pin journal diameter individually. Refer to EM-93, "Inspection After Disassembly" and EM-93, "Inspection After Disassembly".

2. Apply the measured dimension to the “Connecting Rod Bearing Selection Table”.
3. Read the symbol at the cross point of selected row and column in the “Connecting Rod Bearing Selection Table”.
4. Apply the symbol obtained to the “Connecting Rod Bearing Grade Table” to select connecting rod bearing.

Connecting Rod Bearing Selection Table

Crankshaft pin journal diameter Unit: mm (in) / Connecting rod big end diameter Unit: mm (in)		Mark	A	B	C	D	E	F	G	H	J	K	L	M	N
		Hole diameter	47.000 - 47.001 (1.8504 - 1.8504)	47.001 - 47.002 (1.8504 - 1.8505)	47.002 - 47.003 (1.8505 - 1.8505)	47.003 - 47.004 (1.8505 - 1.8505)	47.004 - 47.005 (1.8505 - 1.8506)	47.005 - 47.006 (1.8506 - 1.8506)	47.006 - 47.007 (1.8506 - 1.8507)	47.007 - 47.008 (1.8507 - 1.8507)	47.008 - 47.009 (1.8507 - 1.8507)	47.009 - 47.010 (1.8507 - 1.8508)	47.010 - 47.011 (1.8508 - 1.8508)	47.011 - 47.012 (1.8508 - 1.8509)	47.012 - 47.013 (1.8509 - 1.8509)
Mark	Axle diameter														
A	43.970 - 43.971 (1.7311 - 1.7311)		0	0	0	0	0	01	01	01	1	1	1	12	12
B	43.969 - 43.970 (1.7311 - 1.7311)		0	0	0	0	01	01	01	1	1	1	12	12	12
C	43.968 - 43.969 (1.7310 - 1.7311)		0	0	0	01	01	01	1	1	1	12	12	12	2
D	43.967 - 43.968 (1.7310 - 1.7310)		0	0	01	01	01	1	1	1	12	12	12	2	2
E	43.966 - 43.967 (1.7309 - 1.7310)		0	01	01	01	1	1	1	12	12	12	2	2	2
F	43.965 - 43.966 (1.7309 - 1.7309)		01	01	01	1	1	1	12	12	12	2	2	2	23
G	43.964 - 43.965 (1.7309 - 1.7309)		01	01	1	1	1	12	12	12	2	2	2	23	23
H	43.963 - 43.964 (1.7308 - 1.7309)		01	1	1	1	12	12	12	2	2	2	23	23	23
J	43.962 - 43.963 (1.7308 - 1.7308)		1	1	1	12	12	12	2	2	2	23	23	23	3
K	43.961 - 43.962 (1.7307 - 1.7308)		1	1	12	12	12	2	2	2	23	23	23	3	3
L	43.960 - 43.961 (1.7307 - 1.7307)		1	12	12	12	2	2	2	23	23	23	3	3	3
M	43.959 - 43.960 (1.7307 - 1.7307)		12	12	12	2	2	2	23	23	23	3	3	3	34
N	43.958 - 43.959 (1.7306 - 1.7307)		12	12	2	2	2	23	23	23	3	3	3	34	34
P	43.957 - 43.958 (1.7306 - 1.7306)		12	2	2	2	23	23	23	3	3	3	34	34	34
R	43.956 - 43.957 (1.7305 - 1.7306)		2	2	2	23	23	23	3	3	3	34	34	34	4
S	43.955 - 43.956 (1.7305 - 1.7305)		2	2	23	23	23	3	3	3	34	34	34	4	4
T	43.954 - 43.955 (1.7305 - 1.7305)		2	23	23	23	3	3	3	34	34	34	4	4	4
U	43.953 - 43.954 (1.7304 - 1.7305)		23	23	23	3	3	3	34	34	34	4	4	4	4

PBIC4077E

Connecting Rod Bearing Grade Table

Unit: mm (in)

Grade number	Thickness	Identification color	Remarks
0	1.494 - 1.497 (0.0588 - 0.0589)	Black	Grade and color are the same for upper and lower bearings.
1	1.497 - 1.500 (0.0589 - 0.0591)	Brown	
2	1.500 - 1.503 (0.0591- 0.0592)	Green	
3	1.503 - 1.506 (0.0592 - 0.0593)	Yellow	
4	1.506 - 1.509 (0.0593 - 0.0594)	Blue	

Grade number		Thickness	Identification color	Remarks
01	UPR	1.494 - 1.497 (0.0588 - 0.0589)	Black	Grade and color are different between upper and lower bearings.
	LWR	1.497 - 1.500 (0.0589 - 0.0591)	Brown	
12	UPR	1.497 - 1.500 (0.0589 - 0.0591)	Brown	
	LWR	1.500 - 1.503 (0.0591 - 0.0592)	Green	
23	UPR	1.500 - 1.503 (0.0591 - 0.0592)	Green	
	LWR	1.503 - 1.506 (0.0592 - 0.0593)	Yellow	
34	UPR	1.503 - 1.506 (0.0592 - 0.0593)	Yellow	
	LWR	1.506 - 1.509 (0.0593 - 0.0594)	Blue	

Undersize Bearings Usage Guide

- When the specified connecting rod bearing oil clearance is not obtained with standard size connecting rod bearings, use undersize (US) bearings.
- When using undersize (US) bearing, measure the connecting rod bearing inner diameter with bearing installed, and grind the crankshaft pin so that the connecting rod bearing oil clearance satisfies the standard.

CAUTION:

In grinding crankshaft pin to use undersize bearings, keep the fillet R [1.5 - 1.7 mm (0.059 - 0.067 in)] (A).

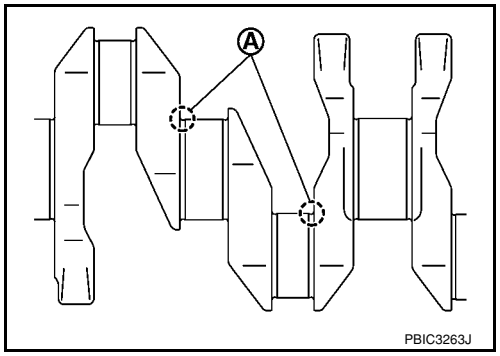

Bearing undersize table

Unit: mm (in)

Size	Thickness
US 0.25 (0.0098)	1.623 - 1.631 (0.0639 - 0.0642)

HOW TO SELECT MAIN BEARING

When New Cylinder Block and Crankshaft are Used

1. “Main Bearing Selection Table” rows correspond to main bearing housing grade on rear left side of cylinder block (L).

   A : Correction stamp
   B : Standard stamp
   C : Cylinder No. 1 bore grade
   D : Cylinder No. 2 bore grade
   E : Cylinder No. 3 bore grade
   F : Cylinder No. 4 bore grade
   G : No. 1 main bearing housing grade
   H : No. 2 main bearing housing grade
   I : No. 3 main bearing housing grade
   J : No. 4 main bearing housing grade
   K : No. 5 main bearing housing grade
   ⇦ : Engine front

   - If there is a correction stamp mark on cylinder block, use it as a correct reference.

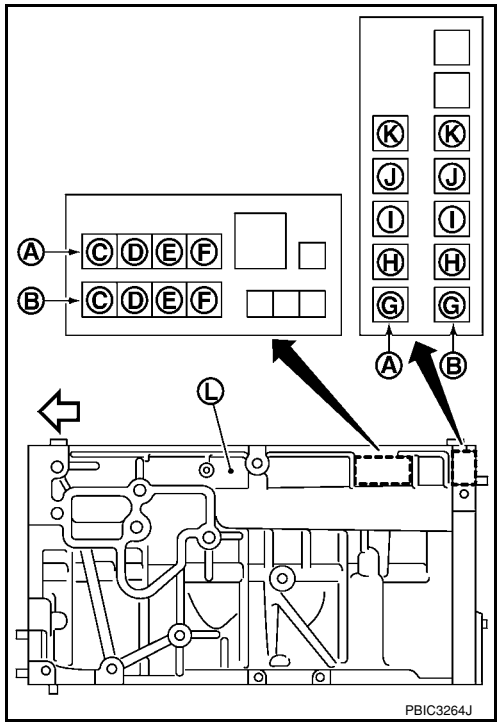

2. Apply main journal diameter grade stamped on crankshaft front side to column in the “Main Bearing Selection Table”.

   A : No. 1 pin journal diameter grade
   B : No. 2 pin journal diameter grade
   C : No. 3 pin journal diameter grade
   D : No. 4 pin journal diameter grade
   E : No. 1 main journal diameter grade
   F : No. 2 main journal diameter grade
   G : No. 3 main journal diameter grade
   H : No. 4 main journal diameter grade
   I : No. 5 main journal diameter grade

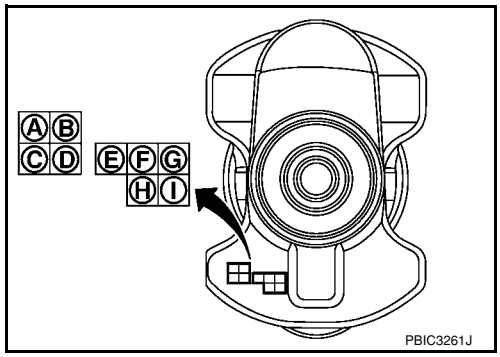

3. Read the symbol at the cross point of selected row and column in the “Main Bearing Selection Table”.
   CAUTION:
   There are two main bearing selection tables. One is for No. 1, 4 and 5 journals and the other is for No. 2 and 3 journals. Make certain to use the appropriate table. This is due to differences in the specified clearances.
4. Apply the symbol obtained to the “Main Bearing Grade Table” to select main bearing.
   NOTE:
   Service part is available as a set of both upper and lower.

When Cylinder Block and Crankshaft are Reused

1. Measure the dimensions of the cylinder block main bearing housing inner diameter and crankshaft main journal diameter individually. Refer to EM-93, "Inspection After Disassembly" and EM-93, "Inspection After Disassembly".
2. Apply the measured dimension to the “Main Bearing Selection Table”.
3. Read the symbol at the cross point of selected row and column in the “Main Bearing Selection Table”.
   CAUTION:
   There are two main bearing selection tables. One is for No. 1, 4 and 5 journals and the other is for No. 2 and 3 journals. Make certain to use the appropriate table. This is due to differences in the specified clearances.
4. Apply the symbol obtained to the “Main Bearing Grade Table” to select main bearing.
   NOTE:

Service part is available as a set of both upper and lower.

Main Bearing Selection Table (No. 1, 4 and 5 journals)

Crankshaft main journal diameter Unit: mm (in) / Cylinder block main bearing housing inner diameter Unit: mm (in)		Mark	A	B	C	D	E	F	G	H	J	K	L	M	N	P	R	S	T	U	V	W
		Hole diameter	55.997 - 55.998 (2.2046 - 2.2046)	55.998 - 55.999 (2.2046 - 2.2047)	55.999 - 56.000 (2.2047 - 2.2047)	56.000 - 56.001 (2.2047 - 2.2048)	56.001 - 56.002 (2.2048 - 2.2048)	56.002 - 56.003 (2.2048 - 2.2048)	56.003 - 56.004 (2.2048 - 2.2049)	56.004 - 56.005 (2.2049 - 2.2049)	56.005 - 56.006 (2.2049 - 2.2050)	56.006 - 56.007 (2.2050 - 2.2050)	56.007 - 56.008 (2.2050 - 2.2050)	56.008 - 56.009 (2.2050 - 2.2051)	56.009 - 56.010 (2.2051 - 2.2051)	56.010 - 56.011 (2.2051 - 2.2052)	56.011 - 56.012 (2.2052 - 2.2052)	56.012 - 56.013 (2.2052 - 2.2052)	56.013 - 56.014 (2.2052 - 2.2053)	56.014 - 56.015 (2.2053 - 2.2053)	56.015 - 56.016 (2.2053 - 2.2053)	56.016 - 56.017 (2.2053 - 2.2054)
Mark	Axle diameter																					
A	51.978 - 51.979 (2.0464 - 2.0464)		0	0	0	0	0	0	0	01	01	01	1	1	1	12	12	12	2	2	2	23
B	51.977 - 51.978 (2.0463 - 2.0464)		0	0	0	0	0	0	01	01	01	1	1	1	12	12	12	2	2	2	23	23
C	51.976 - 51.977 (2.0463 - 2.0463)		0	0	0	0	0	01	01	01	1	1	1	12	12	12	2	2	2	23	23	23
D	51.975 - 51.976 (2.0463 - 2.0463)		0	0	0	0	01	01	01	1	1	1	12	12	12	2	2	2	23	23	23	3
E	51.974 - 51.975 (2.0462 - 2.0463)		0	0	0	01	01	01	1	1	1	12	12	12	2	2	2	23	23	23	3	3
F	51.973 - 51.974 (2.0462 - 2.0462)		0	0	01	01	01	1	1	1	12	12	12	2	2	2	23	23	23	3	3	3
G	51.972 - 51.973 (2.0461 - 2.0462)		0	01	01	01	1	1	1	12	12	12	2	2	2	23	23	23	3	3	3	34
H	51.971 - 51.972 (2.0461 - 2.0461)		01	01	01	1	1	1	12	12	12	2	2	2	23	23	23	3	3	3	34	34
J	51.970 - 51.971 (2.0461 - 2.0461)		01	01	1	1	1	12	12	12	2	2	2	23	23	23	3	3	3	34	34	34
K	51.969 - 51.970 (2.0460 - 2.0461)		01	1	1	1	12	12	12	2	2	2	23	23	23	3	3	3	34	34	34	4
L	51.968 - 51.969 (2.0460 - 2.0460)		1	1	1	12	12	12	2	2	2	23	23	23	3	3	3	34	34	34	4	4
M	51.967 - 51.968 (2.0459 - 2.0460)		1	1	12	12	12	2	2	2	23	23	23	3	3	3	34	34	34	4	4	4
N	51.966 - 51.967 (2.0459 - 2.0459)		1	12	12	12	2	2	2	23	23	23	3	3	3	34	34	34	4	4	4	45
P	51.965 - 51.966 (2.0459 - 2.0459)		12	12	12	2	2	2	23	23	23	3	3	3	34	34	34	4	4	4	45	45
R	51.964 - 51.965 (2.0458 - 2.0459)		12	12	2	2	2	23	23	23	3	3	3	34	34	34	4	4	4	45	45	45
S	51.963 - 51.964 (2.0458 - 2.0458)		12	2	2	2	23	23	23	3	3	3	34	34	34	4	4	4	45	45	45	5
T	51.962 - 51.963 (2.0457 - 2.0458)		2	2	2	23	23	23	3	3	3	34	34	34	4	4	4	45	45	45	5	5
U	51.961 - 51.962 (2.0457 - 2.0457)		2	2	23	23	23	3	3	3	34	34	34	4	4	4	45	45	45	5	5	5
V	51.960 - 51.961 (2.0457 - 2.0457)		2	23	23	23	3	3	3	34	34	34	4	4	4	45	45	45	5	5	5	5
W	51.959 - 51.960 (2.0456 - 2.0457)		23	23	23	3	3	3	34	34	34	4	4	4	45	45	45	5	5	5	5	5

PBIC4078E

Main Bearing Selection Table (No. 2 and 3 journals)

Crankshaft main journal diameter Unit: mm (in) / Cylinder block main bearing housing inner diameter Unit: mm (in)		Mark	A	B	C	D	E	F	G	H	J	K	L	M	N	P	R	S	T	U	V	W
		Hole diameter	55.997 - 55.998 (2.2046 - 2.2046)	55.998 - 55.999 (2.2046 - 2.2047)	55.999 - 56.000 (2.2047 - 2.2047)	56.000 - 56.001 (2.2047 - 2.2048)	56.001 - 56.002 (2.2048 - 2.2048)	56.002 - 56.003 (2.2048 - 2.2048)	56.003 - 56.004 (2.2048 - 2.2049)	56.004 - 56.005 (2.2049 - 2.2049)	56.005 - 56.006 (2.2049 - 2.2050)	56.006 - 56.007 (2.2050 - 2.2050)	56.007 - 56.008 (2.2050 - 2.2050)	56.008 - 56.009 (2.2050 - 2.2051)	56.009 - 56.010 (2.2051 - 2.2051)	56.010 - 56.011 (2.2051 - 2.2052)	56.011 - 56.012 (2.2052 - 2.2052)	56.012 - 56.013 (2.2052 - 2.2052)	56.013 - 56.014 (2.2052 - 2.2053)	56.014 - 56.015 (2.2053 - 2.2053)	56.015 - 56.016 (2.2053 - 2.2053)	56.016 - 56.017 (2.2053 - 2.2054)
Mark	Axle diameter																					
A	51.978 - 51.979 (2.0464 - 2.0464)		1	12	12	12	2	2	2	23	23	23	3	3	3	34	34	34	4	4	4	45
B	51.977 - 51.978 (2.0463 - 2.0464)		12	12	12	2	2	2	23	23	23	3	3	3	34	34	34	4	4	4	45	45
C	51.976 - 51.977 (2.0463 - 2.0463)		12	12	2	2	2	23	23	23	3	3	3	34	34	34	4	4	4	45	45	45
D	51.975 - 51.976 (2.0463 - 2.0463)		12	2	2	2	23	23	23	3	3	3	34	34	34	4	4	4	45	45	45	5
E	51.974 - 51.975 (2.0462 - 2.0463)		2	2	2	23	23	23	3	3	3	34	34	34	4	4	4	45	45	45	5	5
F	51.973 - 51.974 (2.0462 - 2.0462)		2	2	23	23	23	3	3	3	34	34	34	4	4	4	45	45	45	5	5	5
G	51.972 - 51.973 (2.0461 - 2.0462)		2	23	23	23	3	3	3	34	34	34	4	4	4	45	45	45	5	5	5	56
H	51.971 - 51.972 (2.0461 - 2.0461)		23	23	23	3	3	3	34	34	34	4	4	4	45	45	45	5	5	5	56	56
J	51.970 - 51.971 (2.0461 - 2.0461)		23	23	3	3	3	34	34	34	4	4	4	45	45	45	5	5	5	56	56	56
K	51.969 - 51.970 (2.0460 - 2.0461)		23	3	3	3	34	34	34	4	4	4	45	45	45	5	5	5	56	56	56	6
L	51.968 - 51.969 (2.0460 - 2.0460)		3	3	3	34	34	34	4	4	4	45	45	45	5	5	5	56	56	56	6	6
M	51.967 - 51.968 (2.0459 - 2.0460)		3	3	34	34	34	4	4	4	45	45	45	5	5	5	56	56	56	6	6	6
N	51.966 - 51.967 (2.0459 - 2.0459)		3	34	34	34	4	4	4	45	45	45	5	5	5	56	56	56	6	6	6	67
P	51.965 - 51.966 (2.0459 - 2.0459)		34	34	34	4	4	4	45	45	45	5	5	5	56	56	56	6	6	6	67	67
R	51.964 - 51.965 (2.0458 - 2.0459)		34	34	4	4	4	45	45	45	5	5	5	56	56	56	6	6	6	67	67	67
S	51.963 - 51.964 (2.0458 - 2.0458)		34	4	4	4	45	45	45	5	5	5	56	56	56	6	6	6	67	67	67	7
T	51.962 - 51.963 (2.0457 - 2.0458)		4	4	4	45	45	45	5	5	5	56	56	56	6	6	6	67	67	67	7	7
U	51.961 - 51.962 (2.0457 - 2.0457)		4	4	45	45	45	5	5	5	56	56	56	6	6	6	67	67	67	7	7	7
V	51.960 - 51.961 (2.0457 - 2.0457)		4	45	45	45	5	5	5	56	56	56	6	6	6	67	67	67	7	7	7	7
W	51.959 - 51.960 (2.0456 - 2.0457)		45	45	45	5	5	5	56	56	56	6	6	6	67	67	67	7	7	7	7	7

PBIC4079E

Main Bearing Grade Table (All Journals)

Unit: mm (in)

Grade number	Thickness	Identification color	Remarks
0	1.996 - 1.999 (0.0786 - 0.0787)	Black	Grade and color are the same for upper and lower bearings.
1	1.999 - 2.002 (0.0787 - 0.0788)	Brown	
2	2.002 - 2.005 (0.0788- 0.0789)	Green	
3	2.005 - 2.008 (0.0789 - 0.0791)	Yellow	
4	2.008 - 2.011 (0.0791 - 0.0792)	Blue	
5	2.011 - 2.014 (0.0792 - 0.0793)	Pink	
6	2.014 - 2.017 (0.0793 - 0.0794)	Purple	
7	2.017 - 2.020 (0.0794 - 0.0795)	White	

Grade number		Thickness	Identification color	Remarks
01	UPR	1.996 - 1.999 (0.0786 - 0.0787)	Black	Grade and color are different between upper and lower bearings.
	LWR	1.999 - 2.002 (0.0787 - 0.0788)	Brown	
12	UPR	1.999 - 2.002 (0.0787 - 0.0788)	Brown	
	LWR	2.002 - 2.005 (0.0788 - 0.0789)	Green	
23	UPR	2.002 - 2.005 (0.0788- 0.0789)	Green	
	LWR	2.005 - 2.008 (0.0789 - 0.0791)	Yellow	
34	UPR	2.005 - 2.008 (0.0789 - 0.0791)	Yellow	
	LWR	2.008 - 2.011 (0.0791 - 0.0792)	Blue	
45	UPR	2.008 - 2.011 (0.0791 - 0.0792)	Blue	
	LWR	2.011 - 2.014 (0.0792 - 0.0793)	Pink	
56	UPR	2.011 - 2.014 (0.0792 - 0.0793)	Pink	
	LWR	2.014 - 2.017 (0.0793 - 0.0794)	Purple	
67	UPR	2.014 - 2.017 (0.0793 - 0.0794)	Purple	
	LWR	2.017 - 2.020 (0.0794 - 0.0795)	White	

Use Undersize Bearing Usage Guide

- When the specified main bearing oil clearance is not obtained with standard size main bearings, use undersize (US) bearing.
- When using undersize (US) bearing, measure the main bearing inner diameter with bearing installed, and grind main journal so that the main bearing oil clearance satisfies the standard.

CAUTION:

In grinding crankshaft main journal to use undersize bearings, keep the fillet R [1.5 - 1.7 mm (0.059 - 0.067 in)] (A).

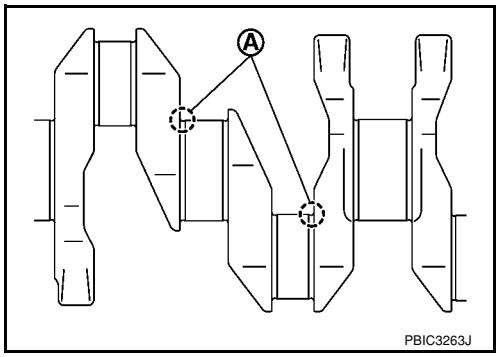

Bearing undersize table

Unit: mm (in)

Size	Thickness
US 0.25 (0.0098)	2.126 - 2.134 (0.0837 - 0.0840)

Inspection After Disassembly

INFOID:000000001702512

CRANKSHAFT END PLAY

- Measure the clearance between thrust bearings and crankshaft arm when crankshaft is moved fully forward or backward with a dial indicator (A).

Standard : 0.10 - 0.26 mm (0.0039 - 0.0102 in)
Limit : 0.30 mm (0.012 in)

- If the measured value exceeds the limit, replace thrust bearings, and measure again. If it still exceeds the limit, replace crankshaft also.

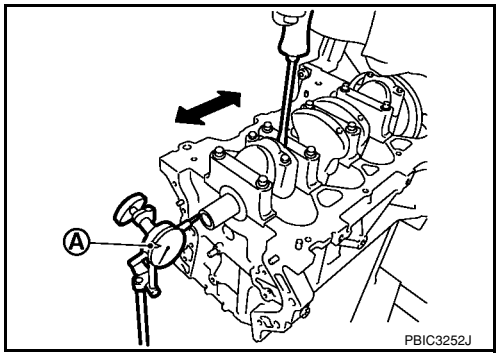

CONNECTING ROD SIDE CLEARANCE

- Measure the side clearance between connecting rod and crankshaft arm with a feeler gauge (A).

Standard : 0.20 - 0.35 mm (0.0079 - 0.0138 in)
Limit : 0.40 mm (0.0157 in)

- If the measured value exceeds the limit, replace connecting rod, and measure again. If it still exceeds the limit, replace crankshaft also.

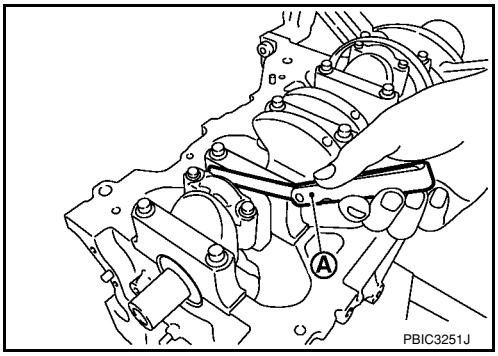

PISTON TO PISTON PIN OIL CLEARANCE

Piston Pin Hole Diameter
Measure the inner diameter of piston pin hole with an inside micrometer (A).

Standard: 19.993 - 19.999 mm (0.7871 - 0.7874 in)

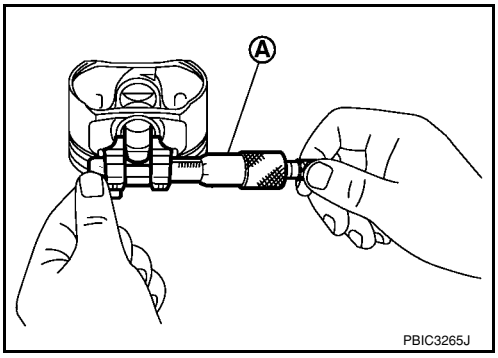

Piston Pin Outer Diameter
Measure the outer diameter of piston pin with a micrometer (A).

Standard: 19.989 - 19.995 mm (0.7870 - 0.7872 in)

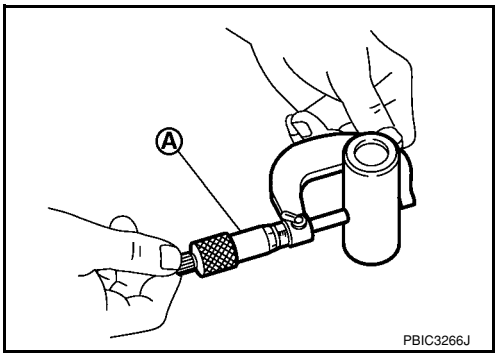

Piston to Piston Pin Oil Clearance
(Piston to piston pin oil clearance) = (Piston pin hole diameter) – (Piston pin outer diameter)

Standard: 0.002 - 0.006 mm (0.0001 - 0.0002 in)

- If oil clearance is out of the standard, replace piston and piston pin assembly.
- When replacing piston and piston pin assembly, follow the "Piston to Cylinder Bore Clearance" procedure.
  NOTE:
  - Piston is available together with piston pin as assembly.
  - Piston pin (piston pin hole) grade is provided only for the parts installed at the plant. For service parts, no grades can be selected. (Only grade “0” is available.)

PISTON RING SIDE CLEARANCE

- Measure the side clearance of piston ring and piston ring groove with a feeler gauge (A).

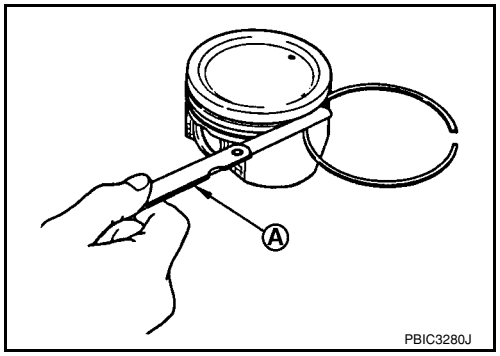

Standard:

Top ring	**: 0.04 - 0.08 mm (0.002 - 0.003 in)**
2nd ring	**: 0.03 - 0.07 mm (0.001 - 0.003 in)**
Oil ring	**: 0.015 - 0.185 mm (0.001 - 0.007 in)**

Limit:

Top ring	**: 0.11 mm (0.0043 in)**
2nd ring	**: 0.10 mm (0.0039 in)**

- If the measured value exceeds the limit, replace piston ring, and measure again. If it still exceeds the limit, replace piston also.

PISTON RING END GAP

- Make sure that cylinder bore inner diameter is within specification. Follow the "Cylinder Bore Inner Diameter" procedure.
- Lubricate with new engine oil to piston (1) and piston ring (2), and then insert (A) piston ring until middle of cylinder (B) with piston, and measure piston ring end gap with a feeler gauge (C).

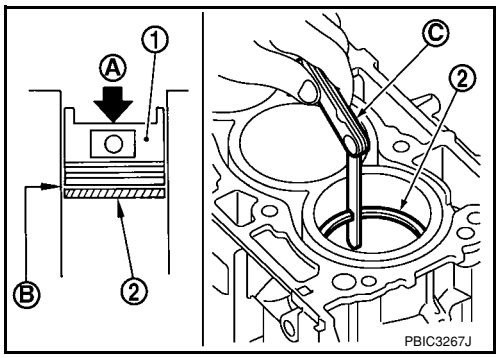

Standard:

Top ring	**: 0.20 - 0.30 mm (0.008 - 0.012 in)**
2nd ring	**: 0.50 - 0.65 mm (0.020 - 0.026 in)**
Oil ring (rail ring)	**: 0.15 - 0.45 mm (0.006 - 0.018 in)**

Limit:

Top ring	**: 0.51 mm (0.020 in)**
2nd ring	**: 0.83 mm (0.033 in)**
Oil ring (rail ring)	**: 0.78 mm (0.031 in)**

- If the measured value exceeds the limit, replace piston ring, and measure again. If it still exceeds the limit, re-bore cylinder and use oversized piston and piston rings.

CONNECTING ROD BEND AND TORSION

- Check with a connecting rod aligner.

C : Feeler gauge

Bend (A):

Limit: 0.15 mm (0.0059 in) per 100 mm (3.94 in) length

Torsion (B):

Limit: 0.30 mm (0.0118 in) per 100 mm (3.94 in) length

- If it exceeds the limit, replace connecting rod assembly.

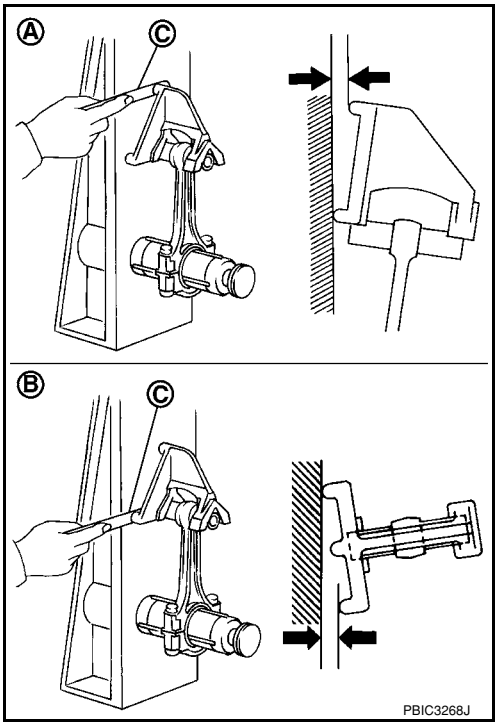

CONNECTING ROD BIG END DIAMETER

- Install connecting rod cap (1) without connecting rod bearing installed, and tightening connecting rod bolts to the specified torque. Refer to EM-77, "Disassembly and Assembly" for the tightening procedure.

2 : Connecting rod

A : Example

B : Measuring direction of inner diameter

- Measure the inner diameter of connecting rod big end with an inside micrometer.

Standard: 47.000 - 47.013 mm (1.8504 - 1.8509 in)

- If out of the standard, replace connecting rod assembly.

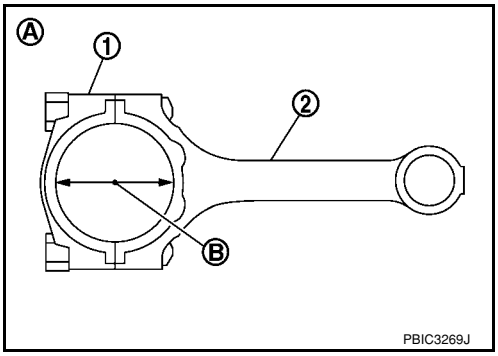

CONNECTING ROD BUSHING OIL CLEARANCE

Connecting Rod Bushing Inner Diameter

Measure the inner diameter of connecting rod bushing with an inside micrometer (A).

Standard: 20.000 - 20.012 mm (0.7874 - 0.7879 in)

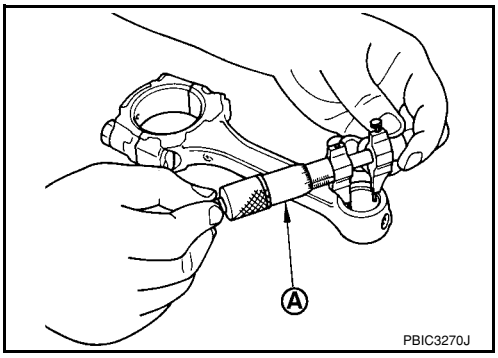

Piston Pin Outer Diameter

Measure the outer diameter of piston pin with a micrometer (A).

Standard: 19.989 - 19.995 mm (0.7870 - 0.7872 in)

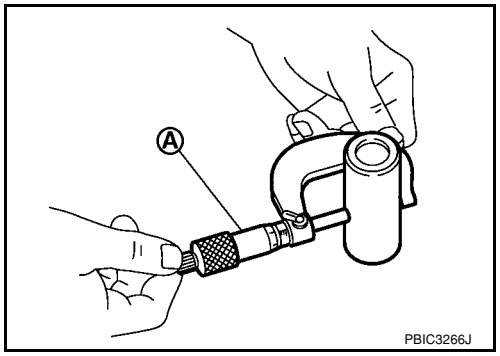

Connecting Rod Bushing Oil Clearance

(Connecting rod bushing oil clearance) = (Connecting rod bushing inner diameter) – (Piston pin outer diameter)

Standard : 0.005 - 0.023 mm (0.0002 - 0.0009 in)

Limit : 0.03 mm (0.0012 in)

- If the measured value is out of the standard, replace connecting rod assembly and/or piston and piston pin assembly.
- If replacing piston and piston pin assembly, follow the "PISTON TO PISTON PIN OIL CLEARANCE" procedure.
- If replacing connecting rod assembly, follow the "Connecting Rod Bushing Oil Clearance" procedure to select connecting rod bearing.

CYLINDER BLOCK TOP SURFACE DISTORTION

- Using a scraper, remove gasket on the cylinder block surface, and also remove engine oil, scale, carbon, or other contamination.

  CAUTION:

  Be careful not to allow gasket flakes to enter engine oil or engine coolant passages.
- Measure the distortion on the cylinder block upper face at some different points in six directions with a straight edge (A) and feeler gauge (B).

Limit: 0.1 mm (0.004 in)

- If it exceeds the limit, replace cylinder block.

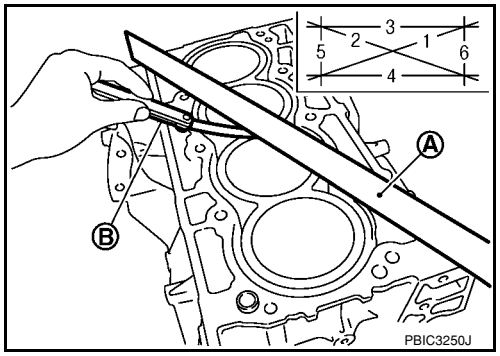

MAIN BEARING HOUSING INNER DIAMETER

- Install main bearing cap without main bearings installed, and tighten main bearing cap bolts to the specified torque. Refer to EM-77, "Disassembly and Assembly" for the tightening procedure.
- Measure the inner diameter of main bearing housing with a bore gauge.
- Measure the position shown [5 mm (0.20 in)] backward from main bearing housing front side in the 2 directions as shown. The smaller one is the measured value.

1	: Cylinder block
2	: Main bearing cap
⇦	: Engine front

Standard: 55.997 - 56.017 mm (2.2046 - 2.2054 in)

- If out of the standard, replace cylinder block and main bearing caps assembly.

  NOTE:

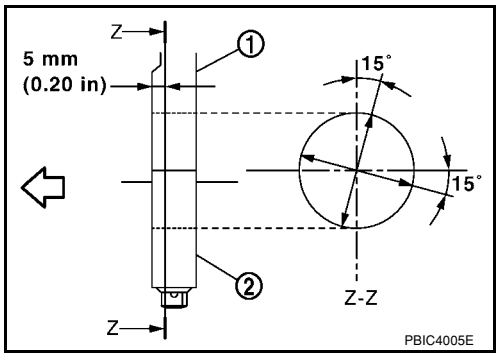

Main bearing caps cannot be replaced as a single, because it is machined together with cylinder block.

PISTON TO CYLINDER BORE CLEARANCE

Cylinder Bore Inner Diameter

- Using a bore gauge (A), measure the cylinder bore for wear, out-of-round and taper at six different points on each cylinder. (“X” and “Y” directions at “A”, “B” and “C”) (“Y” is in longitudinal direction of engine)
  NOTE:
  When determining cylinder bore grade, measure the cylinder bore “X” direction at “B” position.

  Standard inner diameter:
  84.000 - 84.020 mm (3.3071 - 3.3079 in)
  Out-of-round (Difference between “X” and “Y”):
  0.015 mm (0.0006 in)
  Taper limit (Difference between “A” and “C”):
  0.01 mm (0.0004 in)

- If the measured value exceeds the limit, or if there are scratches and/or seizure on the cylinder inner wall, replace cylinder block.
  NOTE:
  Oversize piston is not provided.

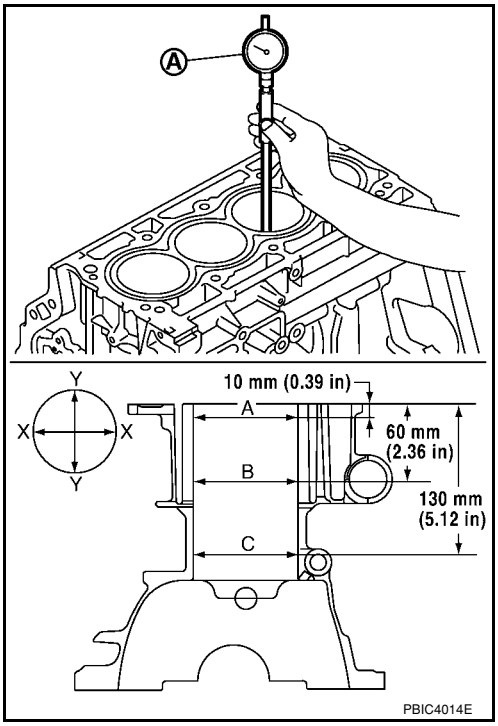

Piston Skirt Diameter

Measure the outer diameter of piston skirt with a micrometer (A).

Measure point
: Distance from the top 39.9 mm (1.571 in)
Standard
: 83.970 - 83.990 mm (3.3059 - 3.3067 in)

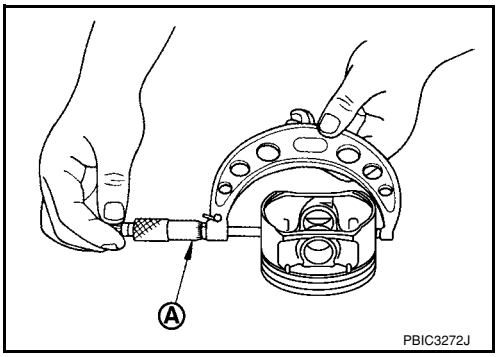

Piston to Cylinder Bore Clearance

Calculate by piston skirt diameter and cylinder bore inner diameter (direction “X”, position “B”).
(Clearance) = (Cylinder bore inner diameter) – (Piston skirt diameter)

Standard : 0.020 - 0.040 mm (0.0008 - 0.0016 in)
Limit : 0.08 mm (0.0031 in)

- If it exceeds the limit, replace piston and piston pin assembly and/or cylinder block. Refer to EM-85, "How to Select Piston and Bearing".

CRANKSHAFT MAIN JOURNAL DIAMETER

- Measure the outer diameter of crankshaft main journals with a micrometer (A).

Standard: 51.959 - 51.979 mm (2.0456 - 2.0464 in) dia.

- If out of the standard, measure the main bearing oil clearance. Then use undersize bearing. Follow the "MAIN BEARING OIL CLEARANCE" procedure.

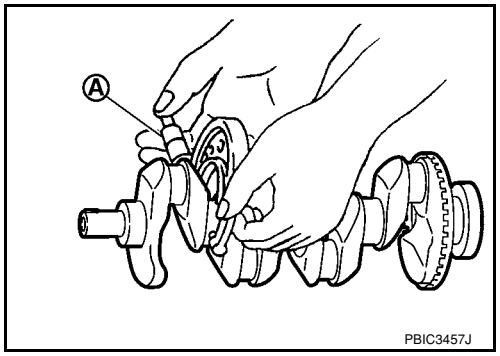

CRANKSHAFT PIN JOURNAL DIAMETER

- Measure the outer diameter of crankshaft pin journal with a micrometer.

Standard: 43.953 - 43.971 mm (1.7304-1.7311 in) dia.

- If out of the standard, measure the connecting rod bearing oil clearance. Then use undersize bearing. Follow the "CONNECTING ROD BEARING OIL CLEARANCE" procedure.

OUT-OF-ROUND AND TAPER OF CRANKSHAFT

- Measure the dimensions at four different points as shown on each main journal and pin journal with a micrometer.
- Out-of-round is indicated by the difference in dimensions between “X” and “Y” at “A” and “B”.
- Taper is indicated by the difference in dimension between “A” and “B” at “X” and “Y”.

Limit:

Out-of-round (Difference between “X” and “Y”)

: 0.0035 mm (0.0001 in)

Taper (Difference between “A” and “B”)

: 0.0035 mm (0.0001 in)

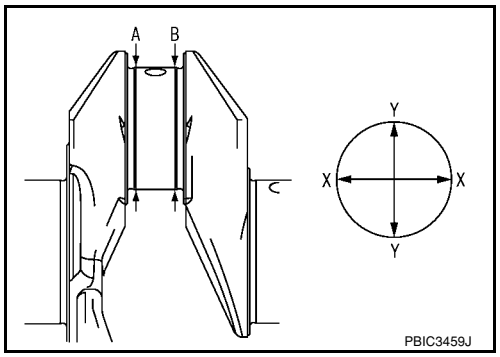

- If the measured value exceeds the limit, correct or replace crankshaft.
- If corrected, measure the bearing oil clearance of the corrected main journal and/or pin journal. Then select main bearing and/or connecting rod bearing. Follow the "MAIN BEARING OIL CLEARANCE" and/or "CONNECTING ROD BEARING OIL CLEARANCE" procedures.

CRANKSHAFT RUNOUT

- Place a V-block on a precise flat table to support the journals on the both end of the crankshaft.
- Place a dial indicator (A) straight up on the No. 3 journal.
- While rotating crankshaft, read the movement of the pointer on the dial indicator. (Total indicator reading)

Standard : 0.05 mm (0.0020 in)

Limit : 0.10 mm (0.0040 in)

- If it exceeds the limit, replace crankshaft.

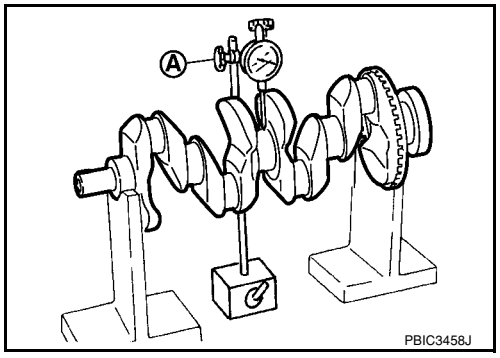

CONNECTING ROD BEARING OIL CLEARANCE

Method by Calculation

- Install connecting rod bearings (2) to connecting rod (3) and connecting rod bearing cap (1), and tighten connecting rod bolts to the specified torque. Refer to EM-77, "Disassembly and Assembly" for tightening procedure.

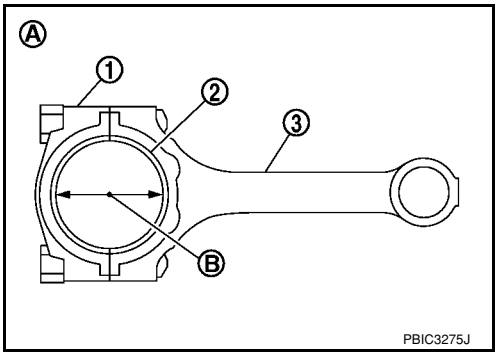

A : Example

B : Inner diameter measuring direction

- Measure the inner diameter of connecting rod bearing with an inside micrometer.
  (Bearing oil clearance) = (Connecting rod bearing inner diameter) – (Crankshaft pin journal diameter)

Standard : 0.037 - 0.047 mm (0.0015 - 0.0019 in)

Limit : 0.07 mm (0.0028 in)

- If clearance exceeds the limit, select proper connecting rod bearing according to connecting rod big end diameter and crankshaft pin journal diameter to obtain specified bearing oil clearance. Refer to EM-85, "How to Select Piston and Bearing".

Method of Using Plastigage

- Remove engine oil and dust on crankshaft pin and the surfaces of each bearing completely.
- Cut a plastigage slightly shorter than the bearing width, and place it in crankshaft axial direction, avoiding oil holes.
- Install connecting rod bearings to connecting rod and cap, and tighten connecting rod bolts to the specified torque. Refer to EM-77, "Disassembly and Assembly" for the tightening procedure.
  CAUTION:
  Never rotate crankshaft.
- Remove connecting rod cap and bearing, and using the scale (A) on the plastigage bag, measure the plastigage width.
  NOTE:
  The procedure when the measured value exceeds the limit is same as that described in the “Method by Calculation”.

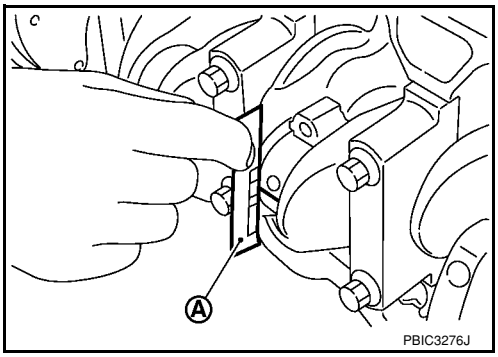

MAIN BEARING OIL CLEARANCE

Method by Calculation

- Install main bearings (3) to cylinder block (1) and main bearing cap (2), and tighten main bearing cap bolts to the specified torque. Refer to EM-77, "Disassembly and Assembly" for the tightening procedure.

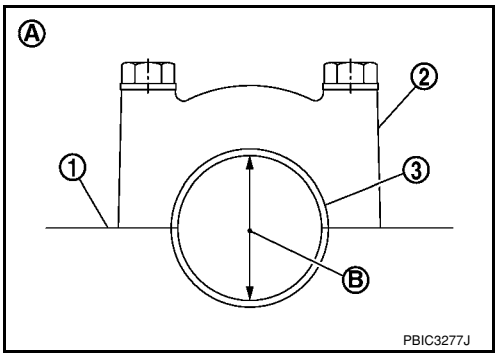

A : Example

B : Inner diameter measuring direction

- Measure the inner diameter of main bearing with a bore gauge.

(Bearing oil clearance) = (Main bearing inner diameter) – (Crankshaft main journal diameter)

Standard:

No. 1, 4 and 5 journals

: 0.024 - 0.034 mm (0.0009 - 0.0013 in)

No. 2 and 3 journals

: 0.012 - 0.022 mm (0.0005 - 0.0009 in)

Limit : 0.065 mm (0.0026 in)

- If clearance exceeds the limit, select proper main bearing according to main bearing inner diameter and crankshaft main journal diameter to obtain specified bearing oil clearance. Refer to EM-85, "How to Select Piston and Bearing".

Method of Using Plastigage

- Remove engine oil and dust on crankshaft main journal and the surfaces of each bearing completely.
- Cut a plastigage slightly shorter than the bearing width, and place it in crankshaft axial direction, avoiding oil holes.
- Install main bearings to cylinder block and main bearing cap, and tighten main bearing cap bolts to the specified torque. Refer to EM-77, "Disassembly and Assembly" for the tightening procedure.

  CAUTION:

  Never rotate crankshaft.
- Remove main bearing cap and bearings, and using the scale (A) on the plastigage bag, measure the plastigage width.

  NOTE:

  The procedure when the measured value exceeds the limit is same as that described in the “Method by Calculation”.

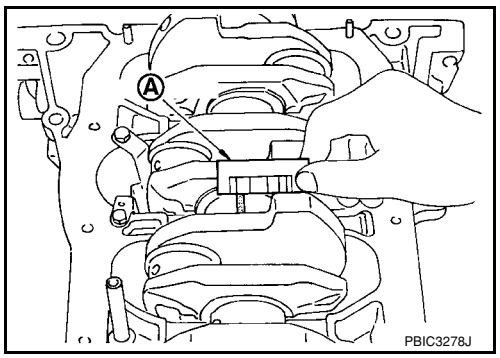

MAIN BEARING CRUSH HEIGHT

- When main bearing cap is removed after being tightened to the specified torque with main bearings (1) installed, the tip end of bearing must protrude (B). Refer to EM-77, "Disassembly and Assembly" for the tightening procedure.

  A : Example

  Standard : There must be crush height.
- If the standard is not met, replace main bearings.

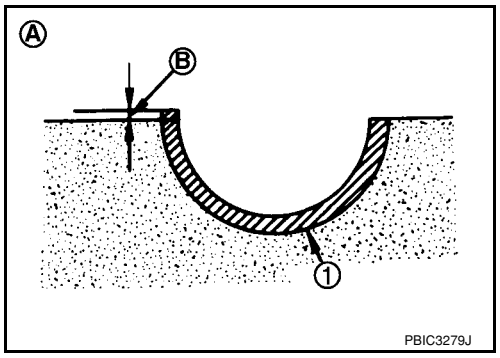

CONNECTING ROD BEARING CRUSH HEIGHT

- When connecting rod bearing cap is removed after being tightened to the specified torque with connecting rod bearings (1) installed, the tip end of bearing must protrude. Refer to EM-77, "Disassembly and Assembly" for the tightening procedure (B).

  A : Example

  Standard : There must be crush height.
- If the standard is not met, replace connecting rod bearings.

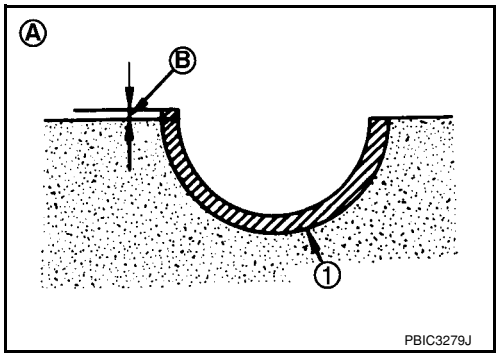

MAIN BEARING CAP BOLT OUTER DIAMETER

- Measure the outer diameters ("d_1", "d_2") at two positions as shown.

  A : "d1" measuring position
  B : "d2" measuring position

- If reduction appears in places other than "B" range, regard it as "d_2".

  Limit ("d_1" – "d_2"): 0.15 mm (0.0059 in)

- If it exceeds the limit (a large difference in dimensions), replace main bearing cap bolt with a new one.

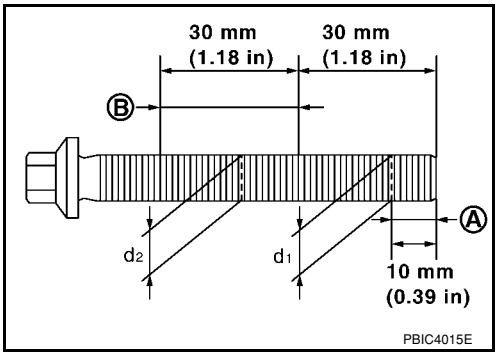

CONNECTING ROD BOLT OUTER DIAMETER

- Measure the outer diameter "d" at position as shown.
- If reduction appears in a position other than "d", regard it as "d".

  Limit: 7.75 mm (0.3051 in)

- When "d" exceeds the limit (when it becomes thinner), replace connecting rod bolt with a new one.

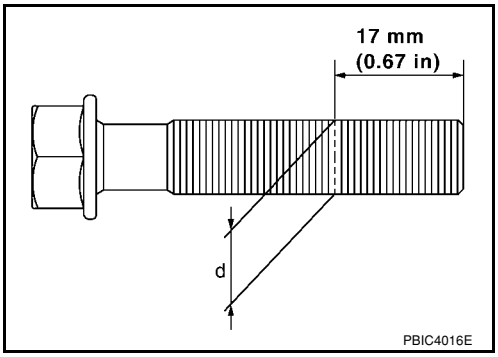

CLOGGED OR DAMAGED OIL FILTER (FOR INTAKE VALVE TIMING CONTROL)

- Make sure that there is no foreign material on the oil filter and check it for clogging.
- Clean it if necessary.
- Check the oil filter for damage.
- Replace it if necessary.

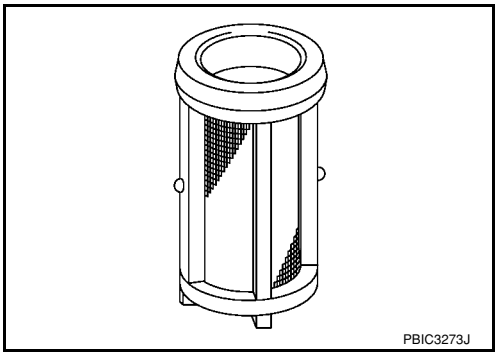

FLYWHEEL DEFLECTION (M/T MODELS)

- Measure the deflection of flywheel contact surface to clutch with a dial indicator (A).
- Measure the deflection at 210 mm (8.27 in) diameter.

  Limit : 0.45 mm (0.0177 in) or less.

- If measured value is out of the standard, replace flywheel.
- If a trace of burn or discoloration is found on the surface, repair it with sandpaper.

CAUTION:
When measuring, keep magnetic fields (such as dial indicator stand) away from signal plate of the rear end of crankshaft.

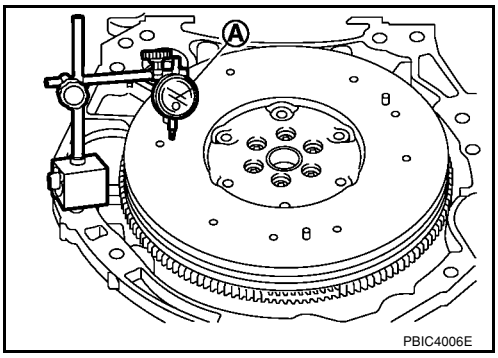

MOVEMENT AMOUNT OF FLYWHEEL (M/T MODELS)

CAUTION:
Never disassemble double mass flywheel.

Movement Amount of Thrust (Fore-and-Aft) Direction

- Measure the movement amount of thrust (fore-and-aft) direction when 100 N (10.2 kg, 22 lb) force is added at the portion of 125 mm (4.92 in) radius from the center of flywheel.

  Standard : 1.8 mm (0.071 in) or less

- If measured value is out of the standard, replace flywheel.

Movement Amount in Radial (Rotation) Direction

Check the movement amount of radial (rotation) direction with the following procedure:

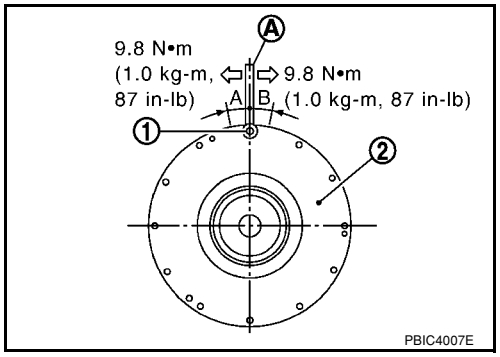

1. Install clutch cover bolt (1) to clutch cover mating hole, and place a torque wrench (A) on the extended line of the flywheel (2) center line.
   - Tighten bolt at a force of 9.8 N·m (1.0 kg-m, 87 in-lb) to keep it from loosening.
2. Put a mating mark on circumferences of the two flywheel masses without applying any load (Measurement standard points).
3. Apply a force of 9.8 N·m (1.0 kg-m, 87 in-lb) in each direction, and mark the movement amount on the mass on the transaxle side.
4. Measure the dimensions of movement amounts “A” and “B” on circumference of the flywheel on the transaxle side.

Limit: 33.2 mm (1.307 in) or less.

- If measured value is out of the standard, replace flywheel.

SERVICE DATA AND SPECIFICATIONS (SDS)

Standard and Limit

INFOID:0000000001702513

GENERAL SPECIFICATIONS

Engine type		MR18DE
Cylinder arrangement		In-line 4
Displacement	cm^3 (cu in)	1,797 (109.65)
Bore and stroke	mm (in)	84.0 x 81.1 (3.307 x 3.192)
Valve arrangement		DOHC
Firing order		1-3-4-2
Number of piston rings	Compression	2
	Oil	1
Compression ratio		9.9
Compression pressure kPa (bar, kg/cm^2 , psi) / 250 rpm	Standard	1,500 (15.0, 15.3, 217.6)
	Minimum	1,200 (12.0, 12.2, 174)
	Differential limit between cylinders	100 (1.0, 1.0, 15)

DRIVE BELT

Tension of drive belt	Auto adjustment by auto-tensioner

WATER CONTROL VALVE

Valve opening temperature	93.5 - 96.5°C (200 - 206°F)
Maximum valve lift	8 mm/ 108°C (0.315 in/ 226°F)
Valve closing temperature	More than 90°C (194°F)

EXHAUST MANIFOLD

Unit: mm (in)

Items		Limit
Surface distortion	Each exhaust port	0.3 (0.012)
	Entire part	0.7 (0.028)

THERMOSTAT

Valve opening temperature	80.5 - 83.5°C (177 - 182°F)
Maximum valve lift	8 mm/ 95°C (0.315 in/ 203°F)
Valve closing temperature	More than 77°C (171°F)

SPARK PLUG

Unit: mm (in)

Plug type	Iridium-tipped TYPE
Make	DENSO
Standard type	FXE20HR11
Spark plug gap	Nominal: 1.1 (0.043)

CYLINDER HEAD

Unit: mm (in)

Items	Standard	Limit
Head surface distortion	—	0.1 (0.004)
Normal cylinder head height “H”	130.9 (5.15)	—

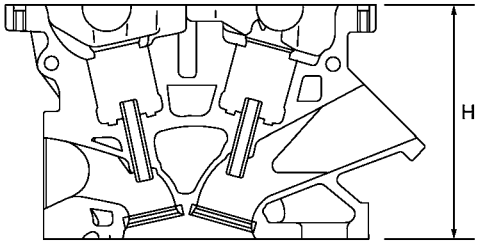

PBIC0924E

VALVE

Valve Timing

Unit: degree

Valve timing	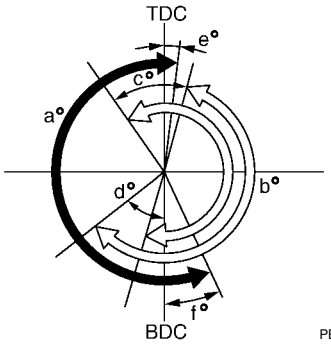 PBIC4542E					
	a	b	c	d	e	f
	212	224	-8 (32)	52 (12)	7	25

( ): Valve timing control “ON”

Valve Dimensions

Unit: mm (in)

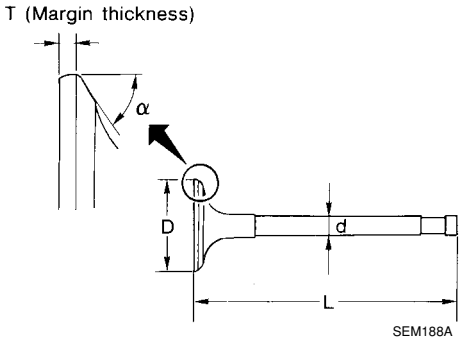

SEM188A

Valve head diameter “D”	Intake	33.8 - 34.1 (1.331 - 1.343)
	Exhaust	27.6 - 27.9 (1.087 - 1.098)
Valve length “L”	Intake	106.27 (4.184)
	Exhaust	105.26 (4.144)

Valve stem diameter “d”	Intake	5.465 - 5.480 (0.2152 - 0.2157)
	Exhaust	5.455 - 5.470 (0.2148 - 0.2154)
Valve seat angle “α”		45°15′ - 45°45′
Valve margin “T”	Intake	1.1 (0.043)
	Exhaust	1.2 (0.047)

Valve Clearance

Unit: mm (in)

Items	Cold	Hot* (reference data)
Intake	0.26 - 0.34 (0.010 - 0.013)	0.304 - 0.416 (0.012 - 0.016)
Exhaust	0.29 - 0.37 (0.011 - 0.015)	0.308 - 0.432 (0.012 - 0.017)

*: Approximately 80°C (176°F)

Available Valve Lifter

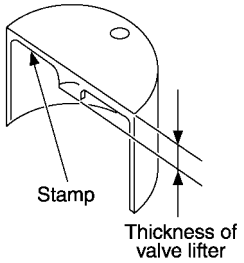

KBIA0119E

Thickness mm (in)	Identification mark
3.00 (0.1181)	300
3.02 (0.1189)	302
3.04 (0.1197)	304
3.06 (0.1205)	306
3.08 (0.1213)	308
3.10 (0.1220)	310
3.12 (0.1228)	312
3.14 (0.1236)	314
3.16 (0.1244)	316
3.18 (0.1252)	318
3.20 (0.1260)	320
3.22 (0.1268)	322
3.24 (0.1276)	324
3.26 (0.1283)	326
3.28 (0.1291)	328
3.30 (0.1299)	330
3.32 (0.1307)	332
3.34 (0.1315)	334
3.36 (0.1323)	336
3.38 (0.1331)	338
3.40 (0.1339)	340
3.42 (0.1346)	342

Thickness mm (in)	Identification mark
3.44 (0.1354)	344
3.46 (0.1362)	346
3.48 (0.1370)	348
3.50 (0.1378)	350

Valve Spring

Items	Intake	Exhaust
Free height	44.90 - 45.10 mm (1.7677 - 1.7755 in)	45.74 - 45.94 mm (1.8007 - 1.8086 in)
Installation height	35.30 mm (1.390 in)	35.30 mm (1.390 in)
Installation load	153 - 173 N (15.6 - 17.6 kg, 34 - 39 lb)	139 - 157 N (14.2 - 16.0 kg, 31 - 35 lb)
Height during valve open	26.36 mm (1.0377 in)	27.80 mm (1.0944 in)
Load with valve open	335 - 377 N (34.2 - 38.5 kg, 75 - 85 lb)	266 - 297 N (27.1 - 30.3 kg, 60 - 67 lb)
Identification color	White	Orange

Valve Lifter

Unit: mm (in)

Items		Standard
Valve lifter outer diameter	Intake	33.977 - 33.987 (1.3377 - 1.3381)
	Exhaust	29.977 - 29.987 (1.1802 - 1.1806)
Valve lifter hole diameter	Intake	34.000 - 34.021 (1.3386 - 1.3394)
	Exhaust	30.000 - 30.021 (1.1811 - 1.1819)
Valve lifter clearance		0.013 - 0.044 (0.0005 - 0.0017)

Valve Guide

Unit: mm (in)

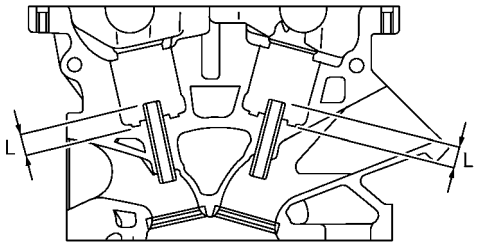

PBIC0184E

Items		Standard part	Service part
Valve guide	Outer diameter	9.523 - 9.534 (0.3749 - 0.3754)	9.723 - 9.734 (0.3828 - 0.3832)
	Inner diameter (Finished size)	5.500 - 5.518 (0.2165 - 0.2172)	
Cylinder head valve guide hole diameter		9.475 - 9.496 (0.3730 - 0.3739)	9.675 - 9.696 (0.3809 - 0.3817)
Interference fit of valve guide		0.027 - 0.059 (0.0011 - 0.0023)	
Items		Standard	Limit
Valve guide clearance	Intake	0.020 - 0.053 (0.0008 - 0.0021)	0.1 (0.004)
	Exhaust	0.030 - 0.063 (0.0012 - 0.0025)	
Projection length “L”		13.35 - 13.65 (0.526 - 0.537)	

Valve Seat

Unit: mm (in)

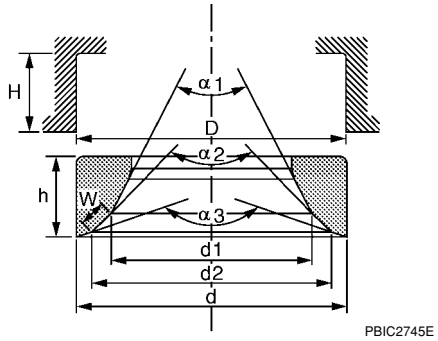

Items		Standard	Oversize [0.5 (0.02)] (Service)
Cylinder head seat recess diameter “D”	Intake	34.700 - 34.727 (1.3661 - 1.3672)	35.200 - 35.227 (1.3858 - 1.3869)
	Exhaust	28.700 - 28.727 (1.1299 - 1.1310)	29.200 - 29.227 (1.1496 - 1.1507)
Valve seat outer diameter “d”	Intake	34.808 - 34.824 (1.3704 - 1.3710)	35.308 - 35.324 (1.3901 - 1.3907)
	Exhaust	28.808 - 28.824 (1.1342 - 1.1348)	29.308 - 29.324 (1.1539 - 1.1545)
Valve seat interference fit		0.081 - 0.124 (0.0032 - 0.0049)	
Diameter “d1”*1	Intake	31.8 (1.252)	
	Exhaust	25.3 (0.996)	
Diameter “d2”*2	Intake	33.1 - 33.6 (1.303 - 1.323)	
	Exhaust	26.9 - 27.4 (1.059 - 1.079)	
Angle “α1”	Intake	60°	
	Exhaust	45°	
Angle “α2”		88°45′ - 90°15′	
Angle “α3”		120°	
Contacting width “W”*3	Intake	1.0 - 1.4 (0.039 - 0.055)	
	Exhaust	1.2 - 1.6 (0.047 - 0.063)	
Height “h”	Intake	5.9 - 6.0 (0.232 - 0.236)	5.03 - 5.13 (0.1980 - 0.2020)
	Exhaust	5.9 - 6.0 (0.232 - 0.236)	4.95 - 5.05 (0.1949 - 0.1988)
Depth “H”	Intake	6.04 (0.2378)	
	Exhaust	6.05 (0.2382)	

*: Diameter made by intersection point of conic angles “α1” and “α2”

*2 : Diameter made by intersection point of conic angles “α2” and “α3”

*3 : Machining data

CAMSHAFT AND CAMSHAFT BEARING

Unit: mm (in)

Items		Standard	Limit
Camshaft journal oil clearance	No. 1	0.045 - 0.086 (0.0018 - 0.0034)	0.15 (0.0059)
	No. 2, 3, 4, 5	0.030 - 0.071 (0.0012 - 0.0028)	
Camshaft bracket inner diameter	No. 1	28.000 - 28.021 (1.1024 - 1.1032)	—
	No. 2, 3, 4, 5	25.000 - 25.021 (0.9843 - 0.9851)	—
Camshaft journal diameter	No. 1	27.935 - 27.955 (1.0998 - 1.1006)	—
	No. 2, 3, 4, 5	24.950 - 24.970 (0.9823 - 0.9381)	—
Camshaft end play		0.075 - 0.153 (0.0030 - 0.0060)	0.24 (0.0094)
Camshaft cam height “A”	Intake	44.605 - 44.795 (1.7560 - 1.7635)	44.405 (1.7482)
	Exhaust	43.175 - 43.365 (1.6997 - 1.7072)	42.975 (1.6919)

Camshaft runout [TIR*]	Less than 0.02 mm (0.0008)	0.05 (0.0020)
Camshaft sprocket runout [TIR*]	—	0.15 (0.0059)

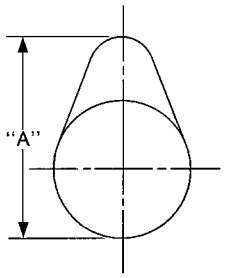

SEM671

*: Total indicator reading

CYLINDER BLOCK

Unit: mm (in)

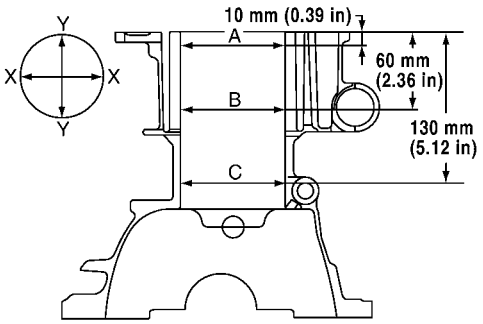

PBIC4017E

Top surface distortion		Limit		0.1 (0.004)
Cylinder bore	Inner diameter	Standard	Grade No. 1	84.000 - 84.010 (3.3071 - 3.3075)
			Grade No. 2	84.010 - 84.020 (3.3075 - 3.3079)
Out-of-round (Difference between "X" and "Y")		Limit		0.015 (0.0006)
Taper (Difference between "A" and "C")				0.01 (0.0004)
Main bearing housing inner diameter grade			Grade No. A	55.997 - 55.998 (2.2046 - 2.2046)
			Grade No. B	55.998 - 55.999 (2.2046 - 2.2047)
			Grade No. C	55.999 - 56.000 (2.2047 - 2.2047)
			Grade No. D	56.000 - 56.001 (2.2047 - 2.2048)
			Grade No. E	56.001 - 56.002 (2.2048 - 2.2048)
			Grade No. F	56.002 - 56.003 (2.2048 - 2.2048)
			Grade No. G	56.003 - 56.004 (2.2048 - 2.2049)
			Grade No. H	56.004 - 56.005 (2.2049 - 2.2049)
			Grade No. J	56.005 - 56.006 (2.2049 - 2.2050)
			Grade No. K	56.006 - 56.007 (2.2050 - 2.2050)
			Grade No. L	56.007 - 56.008 (2.2050 - 2.2050)
			Grade No. M	56.008 - 56.009 (2.2050 - 2.2051)
			Grade No. N	56.009 - 56.010 (2.2051 - 2.2051)
			Grade No. P	56.010 - 56.011 (2.2051 - 2.2052)
			Grade No. R	56.011 - 56.012 (2.2052 - 2.2052)
			Grade No. S	56.012 - 56.013 (2.2052 - 2.2052)
			Grade No. T	56.013 - 56.014 (2.2052 - 2.2053)
			Grade No. U	56.014 - 56.015 (2.2053 - 2.2053)
			Grade No. V	56.015 - 56.016 (2.2053 - 2.2053)
			Grade No. W	56.016 - 56.017 (2.2053 - 2.2054)

PISTON, PISTON RING AND PISTON PIN

Available Piston

Unit: mm (in)

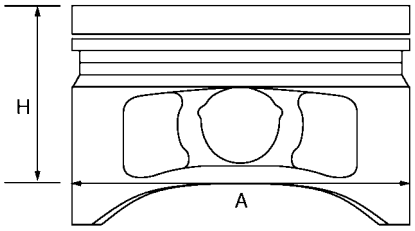

PBIC0188E

Piston skirt diameter “A”	Standard	Grade No. 1	83.970 - 83.980 (3.3059 - 3.3063)
		Grade No. 2	83.980 - 83.990 (3.3063 - 3.3067)
Piston height “H” dimension			39.9 (1.571)
Piston pin hole diameter			19.993 - 19.999 (0.7871 - 0.7874)
Piston to cylinder bore clearance		Standard	0.020 - 0.040 (0.0008 - 0.0016)
		Limit	0.08 (0.0031)

Piston Ring

Unit: mm (in)

Items		Standard	Limit
Side clearance	Top	0.04 - 0.08 (0.002 - 0.003)	0.11 (0.0043)
	2nd	0.03 - 0.07 (0.001 - 0.003)	0.10 (0.0039)
	Oil ring	0.015 - 0.185 (0.001 - 0.007)	—
End gap	Top	0.20 - 0.30 (0.008 - 0.012)	0.51 (0.020)
	2nd	0.50 - 0.65 (0.020 - 0.026)	0.83 (0.033)
	Oil (rail ring)	0.15 - 0.45 (0.006 - 0.018)	0.78 (0.031)

Piston Pin

Unit: mm (in)

Items	Standard	Limit
Piston pin outer diameter	19.989 - 19.995 (0.7870 - 0.7872)	—
Piston to piston pin oil clearance	0.002 - 0.006 (0.0001 - 0.0002)	—
Connecting rod bushing oil clearance	0.005 - 0.023 (0.0002 - 0.0009)	0.03 (0.0012)

CONNECTING ROD

Unit: mm (in)

Center distance		143.44 - 143.54 (5.647 - 5.650)
Bend [per 100 (3.94)]	Limit	0.15 (0.0059)
Torsion [per 100 (3.94)]	Limit	0.30 (0.0118)
Connecting rod bushing inner diameter*		20.000 - 20.012 (0.7874 - 0.7879)

Side clearance	Standard	0.20 - 0.35 (0.0079 - 0.0138)
	Limit	0.40 (0.0157)
Connecting rod big end diameter	Grade No. A	47.000 - 47.001 (1.8504 - 1.8504)
	Grade No. B	47.001 - 47.002 (1.8504 - 1.8505)
	Grade No. C	47.002 - 47.003 (1.8505 - 1.8505)
	Grade No. D	47.003 - 47.004 (1.8505 - 1.8505)
	Grade No. E	47.004 - 47.005 (1.8505 - 1.8506)
	Grade No. F	47.005 - 47.006 (1.8506 - 1.8506)
	Grade No. G	47.006 - 47.007 (1.8506 - 1.8507)
	Grade No. H	47.007 - 47.008 (1.8507 - 1.8507)
	Grade No. J	47.008 - 47.009 (1.8507- 1.8507)
	Grade No. K	47.009 - 47.010 (1.8507- 1.8508)
	Grade No. L	47.010 - 47.011 (1.8508 - 1.8508)
	Grade No. M	47.011 - 47.012 (1.8508 - 1.8509)
	Grade No. N	47.012 - 47.013 (1.8509 - 1.8509)

*: After installing in connecting rod

CRANKSHAFT

Unit: mm (in)

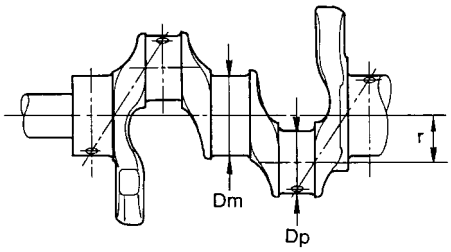

SEM645

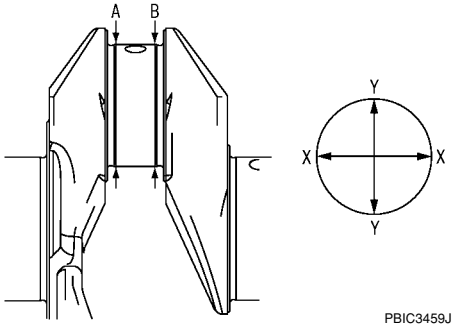

PBIC3459J

Center distance “r”		40.41 - 40.49 (1.5909 - 1.5940)
Out-of-round (Difference between “X” and “Y”)	Limit	0.0035 (0.0001)
Taper (Difference between “A” and “B”)	Limit	0.0035 (0.0001)
Runout [TIR*]	Standard	0.05 (0.0020)
	Limit	0.10 (0.0040)
Crankshaft end play	Standard	0.10 - 0.26 (0.0039 - 0.0102)
	Limit	0.30 (0.012)

Pin journal diameter grade. “Dp”	Grade No. A	43.970 - 43.971 (1.7311 - 1.7311)
	Grade No. B	43.969 - 43.970 (1.7311 - 1.7311)
	Grade No. C	43.968 - 43.969 (1.7310 - 1.7311)
	Grade No. D	43.967 - 43.968 (1.7310 - 1.7310)
	Grade No. E	43.966 - 43.967 (1.7309 - 1.7310)
	Grade No. F	43.965 - 43.966 (1.7309 - 1.7309)
	Grade No. G	43.964 - 43.965 (1.7309 - 1.7309)
	Grade No. H	43.963 - 43.964 (1.7308 - 1.7309)
	Grade No. J	43.962 - 43.963 (1.7308 - 1.7308)
	Grade No. K	43.961 - 43.962 (1.7307 - 1.7308)
	Grade No. L	43.960 - 43.961 (1.7307 - 1.7307)
	Grade No. M	43.959 - 43.960 (1.7307 - 1.7307)
	Grade No. N	43.958 - 43.959 (1.7306 - 1.7307)
	Grade No. P	43.957 - 43.958 (1.7306 - 1.7306)
	Grade No. R	43.956 - 43.957 (1.7305 - 1.7306)
	Grade No. S	43.955 - 43.956 (1.7305 - 1.7305)
	Grade No. T	43.954 - 43.955 (1.7305 - 1.7305)
	Grade No. U	43.953 - 43.954 (1.7304 - 1.7305)
Main journal diameter grade. “Dm”	Grade No. A	51.978 - 51.979 (2.0464 - 2.0464)
	Grade No. B	51.977 - 51.978 (2.0463 - 2.0464)
	Grade No. C	51.976 - 51.977 (2.0463 - 2.0463)
	Grade No. D	51.975 - 51.976 (2.0463 - 2.0463)
	Grade No. E	51.974 - 51.975 (2.0462 - 2.0463)
	Grade No. F	51.973 - 51.974 (2.0462 - 2.0462)
	Grade No. G	51.972 - 51.973 (2.0461 - 2.0462)
	Grade No. H	51.971 - 51.972 (2.0461 - 2.0461)
	Grade No. J	51.970 - 51.971 (2.0461 - 2.0461)
	Grade No. K	51.969 - 51.970 (2.0460 - 2.0461)
	Grade No. L	51.968 - 51.969 (2.0460 - 2.0460)
	Grade No. M	51.967 - 51.968 (2.0459 - 2.0460)
	Grade No. N	51.966 - 51.967 (2.0459 - 2.0459)
	Grade No. P	51.965 - 51.966 (2.0459 - 2.0459)
	Grade No. R	51.964 - 51.965 (2.0458 - 2.0459)
	Grade No. S	51.963 - 51.964 (2.0458 - 2.0458)
	Grade No. T	51.962 - 51.963 (2.0457 - 2.0458)
	Grade No. U	51.961 - 51.962 (2.0457 - 2.0457)
	Grade No. V	51.960 - 51.961 (2.0457 - 2.0457)
	Grade No. W	51.959 - 51.960 (2.0456 - 2.0457)

*: Total indicator reading

MAIN BEARING

Unit: mm (in)

Grade number	Thickness	Identification color	Remarks
0	1.996 - 1.999 (0.0786 - 0.0787)	Black	Grade and color are the same for upper and lower bearings.
1	1.999 - 2.002 (0.0787 - 0.0788)	Brown	
2	2.002 - 2.005 (0.0788 - 0.0789)	Green	
3	2.005 - 2.008 (0.0789 - 0.0791)	Yellow	
4	2.008 - 2.011 (0.0791 - 0.0792)	Blue	
5	2.011 - 2.014 (0.0792 - 0.0793)	Pink	
6	2.014 - 2.017 (0.0793 - 0.0794)	Purple	
7	2.017 - 2.020 (0.0794 - 0.0795)	White	

01	UPR	1.996 - 1.999 (0.0786 - 0.0787)	Black	Grade and color are different between upper and lower bearings.
	LWR	1.999 - 2.002 (0.0787 - 0.0788)	Brown	
12	UPR	1.999 - 2.002 (0.0787 - 0.0788)	Brown	
	LWR	2.002 - 2.005 (0.0788 - 0.0789)	Green	
23	UPR	2.002 - 2.005 (0.0788 - 0.0789)	Green	
	LWR	2.005 - 2.008 (0.0789 - 0.0791)	Yellow	
34	UPR	2.005 - 2.008 (0.0789 - 0.0791)	Yellow	
	LWR	2.008 - 2.011 (0.0791 - 0.0792)	Blue	
45	UPR	2.008 - 2.011 (0.0791 - 0.0792)	Blue	
	LWR	2.011 - 2.014 (0.0792 - 0.0793)	Pink	
56	UPR	2.011 - 2.014 (0.0792 - 0.0793)	Pink	
	LWR	2.014 - 2.017 (0.0793 - 0.0794)	Purple	
67	UPR	2.014 - 2.017 (0.0793 - 0.0794)	Purple	
	LWR	2.017 - 2.020 (0.0794 - 0.0795)	White	

Undersize

Unit: mm (in)

Item	Thickness	Main journal diameter
US 0.25 (0.0098)	2.126 - 2.134 (0.0837 - 0.0840)	Grind so that bearing clearance is the specified value.

Bearing Oil Clearance

Unit: mm (in)

Main bearing oil clearance	Standard	No. 1, 4 and 5	0.024 - 0.034 (0.0009 - 0.0013)
		No. 2 and 3	0.012 - 0.022 (0.0005 - 0.0009)
	Limit		0.065 (0.0026)

CONNECTING ROD BEARING

Grade number		Thickness mm (in)	Identification color	Remarks
0		1.494 - 1.497 (0.0588 - 0.0589)	Black	Grade and color are the same for upper and lower bearings.
1		1.497 - 1.500 (0.0589 - 0.0591)	Brown	
2		1.500 - 1.503 (0.0591 - 0.0592)	Green	
3		1.503 - 1.506 (0.0592 - 0.0593)	Yellow	
4		1.506 - 1.509 (0.0593 - 0.0594)	Blue	
01	UPR	1.494 - 1.497 (0.0588 - 0.0589)	Black	Grade and color are different between upper and lower bearings.
	LWR	1.497 - 1.500 (0.0589 - 0.0591)	Brown	
12	UPR	1.497 - 1.500 (0.0589 - 0.0591)	Brown	
	LWR	1.500 - 1.503 (0.0591 - 0.0592)	Green	
23	UPR	1.500 - 1.503 (0.0591 - 0.0592)	Green	
	LWR	1.503 - 1.506 (0.0592 - 0.0593)	Yellow	
34	UPR	1.503 - 1.506 (0.0592 - 0.0593)	Yellow	
	LWR	1.506 - 1.509 (0.0593 - 0.0594)	Blue	

Undersize

Unit: mm (in)

Item	Thickness	Crank pin journal diameter
US 0.25 (0.0098)	1.623 - 1.631 (0.0639 - 0.0642)	Grind so that bearing clearance is the specified value.

Bearing Oil Clearance

Unit: mm (in)

Connecting rod bearing oil clearance	Standard	0.037 - 0.047 (0.0015 - 0.0019)
	Limit	0.07 (0.0028)

SECTION EX
EXHAUST SYSTEM

CONTENTS

SERVICE INFORMATION 2

PRECAUTIONS 2
Precaution for Supplemental Restraint System (SRS) "AIR BAG" and "SEAT BELT PRE-TENSIONER" 2

PREPARATION 3
Special Service Tool 3
Commercial Service Tool 3

EXHAUST SYSTEM 4
Checking Exhaust System 4
Component 4
Removal and Installation 4

SERVICE INFORMATION

PRECAUTIONS

Precaution for Supplemental Restraint System (SRS) "AIR BAG" and "SEAT BELT PRE-TENSIONER"

INFOID:0000000001830414

The Supplemental Restraint System such as “AIR BAG” and “SEAT BELT PRE-TENSIONER”, used along with a front seat belt, helps to reduce the risk or severity of injury to the driver and front passenger for certain types of collision. This system includes seat belt switch inputs and dual stage front air bag modules. The SRS system uses the seat belt switches to determine the front air bag deployment, and may only deploy one front air bag, depending on the severity of a collision and whether the front occupants are belted or unbelted.
Information necessary to service the system safely is included in the SRS and SB section of this Service Manual.

WARNING:

- **To avoid rendering the SRS inoperative, which could increase the risk of personal injury or death in the event of a collision which would result in air bag inflation, all maintenance must be performed by an authorized NISSAN/INFINITI dealer.**
- **Improper maintenance, including incorrect removal and installation of the SRS, can lead to personal injury caused by unintentional activation of the system. For removal of Spiral Cable and Air Bag Module, see the SRS section.**
- **Do not use electrical test equipment on any circuit related to the SRS unless instructed to in this Service Manual. SRS wiring harnesses can be identified by yellow and/or orange harnesses or harness connectors.**

PREPARATION

Special Service Tool

INFOID:0000000001703104

Tool number Tool name		Description
KV10114400 (J-38365) Heated oxygen sensor wrench	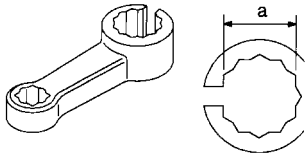 NT636	Loosening or tightening heated oxygen sensor **a: 22 mm (0.87 in)**

Commercial Service Tool

INFOID:0000000001703105

Tool name		Description
Heated oxygen sensor thread cleaner	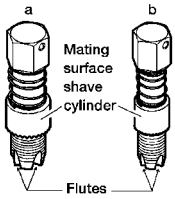 AEM488	Reconditioning the exhaust system threads before installing a new heated oxygen sensor (Use with anti-seize lubricant shown below.) **a: 18 mm (0.71 in) dia. for zirconia heated oxygen sensor** **b: 12 mm (0.47 in) dia. for titania heated oxygen sensor**
Anti-seize lubricant (Permatex 133AR or equivalent meeting MIL specification MIL-A-907)	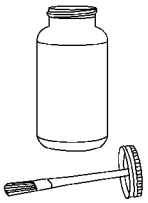 AEM489	Lubricating heated oxygen sensor thread cleaner when reconditioning exhaust system threads

EXHAUST SYSTEM

Checking Exhaust System

INFOID:0000000001703106

Check exhaust pipes, muffler and mounting for improper attachment, leaks, cracks, damage or deterioration.
- If necessary, repair or replace damaged parts.

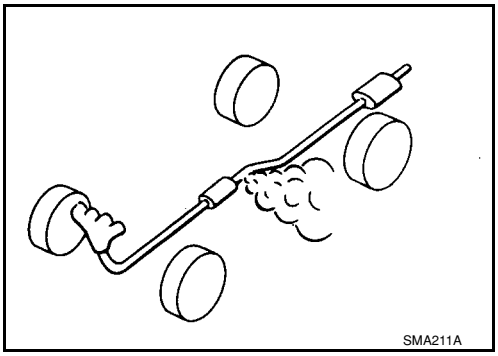

Component

INFOID:0000000001703107

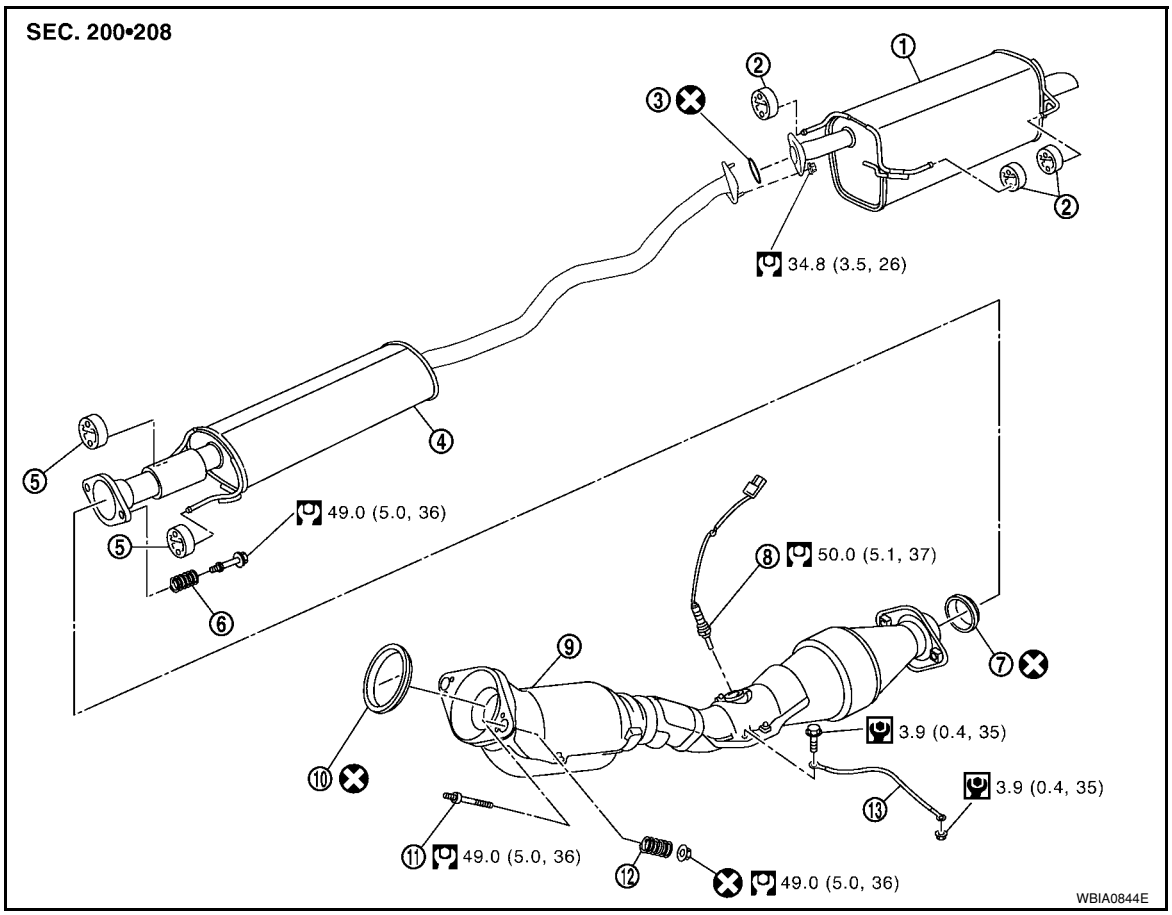

1. Main muffler
2. Mounting rubber
3. Ring gasket
4. Center muffler
5. Mounting rubber
6. Spring
7. Seal bearing
8. Heated oxygen sensor 2
9. Exhaust front tube
10. Seal bearing
11. Stud bolt
12. Spring
13. Ground cable

Removal and Installation

INFOID:0000000001703108

REMOVAL

CAUTION:

- **Be sure to use genuine NISSAN exhaust system parts or equivalents which are specially designed for heat resistance, corrosion resistance and shape.**
- **Perform the operation with the exhaust system fully cooled down because the system will be hot just after the engine stops.**
- **Be careful not to cut your hand on heat insulator edge.**

1. Disconnect harness connector of heated oxygen sensor 2.
   - Using Tool, remove heated oxygen sensor 2.

     CAUTION:
     Be careful not to damage heated oxygen sensor 2.

     Tool number : KV10114400 (J-38365)
2. Disconnect each joint and mounting rubber.

INSTALLATION

Installation is in the reverse order of removal.

CAUTION:
- **Always replace exhaust gaskets and seal bearings with new ones when installing.**
- **Discard any heated oxygen sensor 2 which has been dropped from a height of more than 0.5 m (19.7 in) onto a hard surface such as a concrete floor; use a new one.**
- **Before installing a new heated oxygen sensor 2, clean exhaust system threads using the heated oxygen sensor thread cleaner and apply anti-seize lubricant (commercial service tool).**
- **Do not over tighten heated oxygen sensor 2. Doing so may cause damage to the heated oxygen sensor 2, resulting in the "MIL" coming on.**
- **Remove deposits from the sealing surface of each connection. Connect them securely to avoid exhaust leakage.**
- **Temporarily tighten nuts on the exhaust manifold side and bolts on the vehicle side. Check each part for unusual interference, and then tighten them to the specified torque.**
- **When installing each mounting rubber, avoid twisting or unusual extension in up/down and right/left directions.**

Exhaust Manifold to Exhaust Front Tube

1. Securely insert seal bearing (2) into exhaust manifold (1) side in the direction shown.
   - Exhaust front tube (5)

   CAUTION:
   Be careful not to damage seal bearing surface when installing.
2. Install spring (3), tighten nut (4).
   - Be careful that the stud bolt nut does not interfere with the flanged area (⬅).
   - Make sure the spring (3) sits properly on the flange surface by aligning it to the locator dimples.

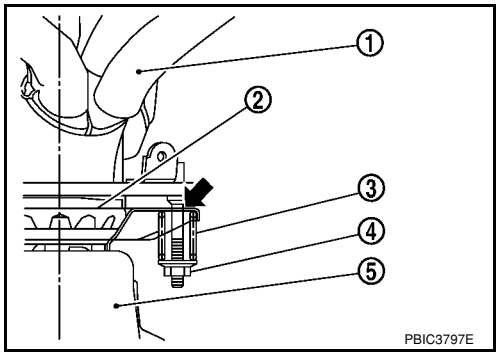

Exhaust Front Tube to Center Muffler

1. Securely insert seal bearing (2) into exhaust front tube (1) side in the direction shown.
   - Center muffler (5)

   CAUTION:
   Be careful not to damage seal bearing surface when installing.
2. With spring (3), tighten bolt (4).
   - Be careful that the stud bolt does not interfere with the flanged area (⬅).
   - Make sure the spring (3) sits properly on the flange surface by aligning it to the locator dimples.

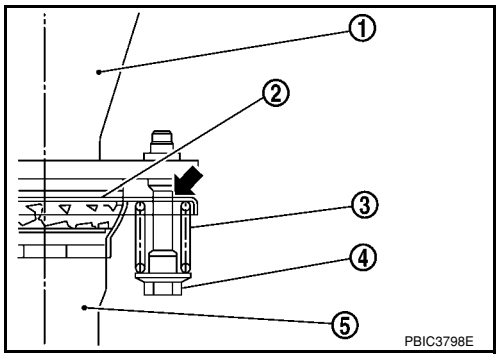

INSPECTION AFTER INSTALLATION

- With the engine running, check exhaust tube joints for exhaust leakage and unusual noise.
- Check to ensure that brackets and mounting rubbers are installed properly and free from undue stress. Improper installation could result in excessive noise and vibration.

SECTION FAX
FRONT AXLE

CONTENTS

SERVICE INFORMATION 2

PRECAUTIONS 2
Caution 2

PREPARATION 3
Special Service Tool 3
Commercial Service Tool 3

NOISE, VIBRATION AND HARSHNESS (NVH) TROUBLESHOOTING 4
NVH Troubleshooting Chart 4

FRONT WHEEL HUB AND KNUCKLE 5
On-Vehicle Inspection and Service 5
Removal and Installation 5

FRONT DRIVE SHAFT 8
On-Vehicle Inspection and Service 8
Removal and Installation (Left Side) 8
Removal and Installation (Right Side) 9
Disassembly and Assembly (Left Side) 12
Disassembly and Assembly (Right Side) 17

SERVICE DATA AND SPECIFICATIONS (SDS) 24
Drive Shaft 24
Dynamic Damper 24

SERVICE INFORMATION

PRECAUTIONS

Caution

INFOID:0000000001703697

Observe the following precautions when disassembling and assembling drive shaft.
- Joint sub-assembly does not disassemble because it is non-overhaul parts.
- Perform work in a location which is as dust-free as possible.
- Before disassembling and assembling, clean the outside of parts.
- Prevention of the entry of foreign objects must be taken into account during disassembly of the service location.
- Disassembled parts must be carefully reassembled in the correct order. If work is interrupted, a clean cover must be placed over parts.
- Paper shop cloths must be used. Fabric shop cloths must not be used because of danger of lint adhering to parts.
- Disassembled parts (except for rubber parts) should be cleaned with kerosene which shall be removed by blowing with air or wiping with paper shop cloths.

PREPARATION

Special Service Tool

INFOID:0000000001703698

The actual shapes of Kent-Moore tools may differ from those of special service tools illustrated here.

Tool number (Kent-Moore No.) Tool name		Description
KV40107300 (—) Boot Band crimping tool	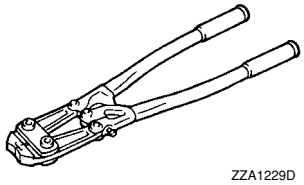 ZZA1229D	Installing boot bands
KV38105500 (J-33904) Differential side oil seal protector	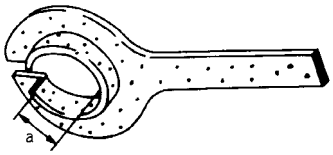 ZZA0835D	Installing drive shaft LH **a: 40 mm (1.57 in) dia.**
KV38106700 (J-34296) Differential side oil seal protector	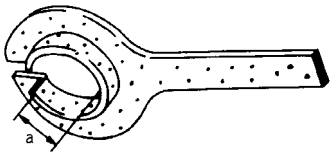 ZZA0835D	Installing drive shaft RH **a: 36 mm (1.42 in) dia.**
HT72520000 (J-25730-A) Ball joint remover	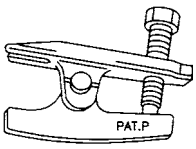 NT146	Removing tie-rod outer end and lower ball joint

Commercial Service Tool

INFOID:0000000001703699

Tool name		Description
Power tool	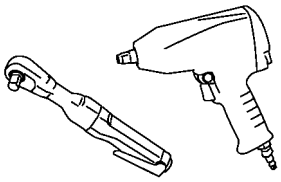 PBIC0190E	• Removing wheel nuts • Removing torque member bolts • Removing hub lock nut

NOISE, VIBRATION AND HARSHNESS (NVH) TROUBLESHOOTING

NVH Troubleshooting Chart

INFOID:0000000001703700

Use chart below to help you find the cause of the symptom. If necessary, repair or replace these parts.

Reference page			—	—	—	FAX-5	—	FAX-5	FSU-5, "NVH Troubleshooting Chart"	Refer to Front axle in this chart.	WT-4, "NVH Troubleshooting Chart"	WT-4, "NVH Troubleshooting Chart"	Refer to DRIVE SHAFT in this chart.	BR-4, "NVH Troubleshooting Chart"	PS-5, "NVH Troubleshooting Chart"
Possible cause and SUSPECTED PARTS			Excessive joint angle	Joint sliding resistance	Imbalance	Improper installation, looseness	Parts interference	Wheel bearing damage	FRONT SUSPENSION	FRONT AXLE	TIRES	ROAD WHEELS	DRIVE SHAFT	BRAKES	STEERING
Symptom	DRIVE SHAFT	Noise	×	×				×	×	×	×	×		×	×
		Shake	×		×			×	×	×	×	×		×	×
	FRONT AXLE	Noise				×	×	×	×		×	×	×	×	×
		Shake				×	×	×	×		×	×	×	×	×
		Vibration				×	×	×	×		×		×		×
		Shimmy				×	×		×		×	×		×	×
		Shudder				×			×		×	×		×	×
		Poor quality ride or handling				×	×		×		×	×			

×: Applicable

FRONT WHEEL HUB AND KNUCKLE

On-Vehicle Inspection and Service

INFOID:0000000001703701

- Check the axle and suspension parts for excessive play, wear, or damage.
- Shake each front wheel to check for excessive play as shown.

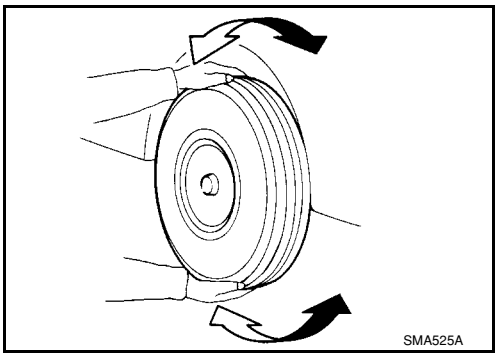

FRONT WHEEL BEARING INSPECTION

- Move wheel hub and bearing assembly in the axial direction by hand. Make sure the axial end play is within specification.

Axial end play : 0.05 mm (0.002 in) or less

- Check that the wheel hub bearing operates smoothly.
- Replace the wheel hub assembly if the axial end play exceeds specification, or if the wheel bearing does not turn smoothly. Refer to RAX-4, "Removal and Installation" .

CAUTION:
The wheel hub assembly does not require maintenance. If any of the following symptoms are noted, replace the wheel hub assembly.
- **Growling noise is emitted from the wheel hub bearing during operation.**
- **Wheel hub bearing drags or turns roughly.**

Removal and Installation

INFOID:0000000001703702

COMPONENT

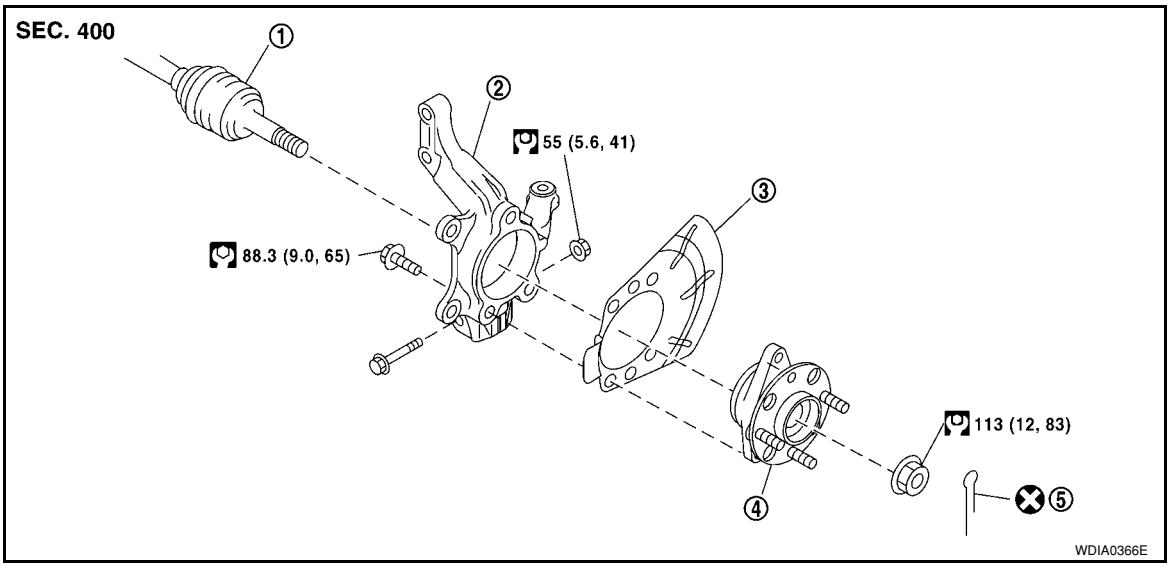

1. Drive shaft
2. Steering knuckle
3. Splash guard
4. Wheel hub and bearing assembly
5. Cotter pin

REMOVAL

1. Remove wheel and tire using power tool. Refer to WT-6, "Rotation" .

2. Without disassembling the hydraulic lines, remove the torque member bolts using power tool. Then reposition the torque member and brake caliper assembly aside with wire. Refer to BR-23 .
   CAUTION:
   Do not depress brake pedal while brake caliper is removed.
3. Put alignment marks on disc rotor and wheel hub and bearing assembly, then remove disc rotor.

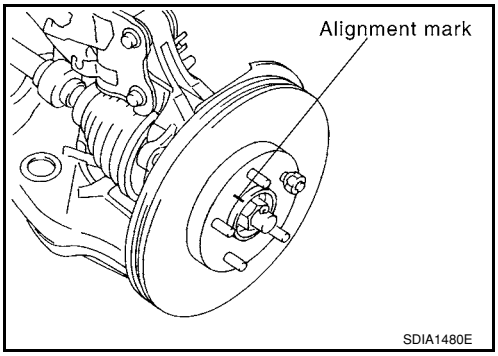

4. Remove wheel sensor from steering knuckle. Refer to BRC-32 .
   CAUTION:
   Do not pull on wheel sensor harness.
5. Loosen steering outer socket (1) nut.
6. Remove steering outer socket (1) from steering knuckle (2) so as not to damage ball joint (3) boot using Tool.
   CAUTION:
   Temporarily leave the outer socket nut installed to prevent damage to threads and to prevent the ball joint remover or suitable tool from suddenly coming off.

   Tool number : HT72520000 (J-25730-A)

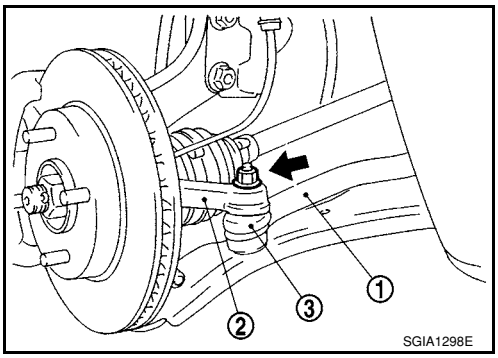

7. Remove transverse link ball joint nut and bolt. Then, remove transverse link from steering knuckle.
8. Remove cotter pin, then loosen hub lock nut using power tool.
   CAUTION:
   Temporarily leave the hub lock nut installed to prevent damage to threads.
9. Separate the drive shaft from the wheel hub and bearing assembly by lightly tapping the end of the drive shaft using a hammer or suitable tool, and then remove hub lock nut.
   NOTE:
   Use a suitable puller if wheel hub and bearing assembly and drive shaft cannot be separated after performing the above procedure.
10. Remove the drive shaft from the wheel hub and bearing assembly and support the drive shaft.
    CAUTION:
    - **Do not apply an excessive angle to drive shaft joint when removing from the wheel hub and bearing assembly,**
    - **Do not excessively extend slide joint.**
    - **Do not allow drive shaft to hang down. Support the entire drive shaft.**

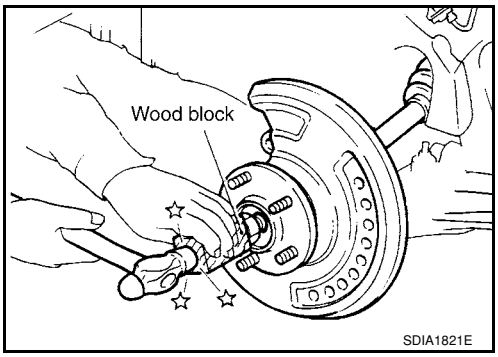

11. Remove wheel hub and bearing assembly bolts, and then remove splash guard and wheel hub and bearing assembly from steering knuckle.

12. Remove nuts and bolts, and then remove steering knuckle from strut assembly. Refer to "COMPONENT" .

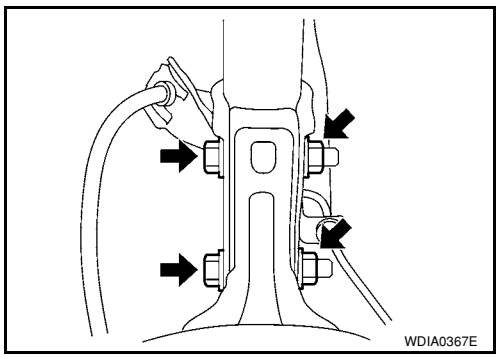

INSPECTION AFTER REMOVAL

Wheel Hub and Knuckle Inspection

Check for any deformity, cracks, or other damage on the wheel hub assembly and knuckle, replace if necessary.

CAUTION:

The wheel hub assembly does not require maintenance. If any of the following symptoms are noted, replace the wheel hub assembly.

- **Growling noise is emitted from the wheel hub bearing during operation.**
- **Wheel hub bearing drags or turns roughly.**

Ball Joint Inspection

Check boots of transverse link and steering outer socket ball joint for breakage, axial play, and torque. Refer to FSU-14, "Removal and Installation" transverse link and PS-13, "Disassembly and Assembly" steering outer socket ball joint.

INSTALLATION

Installation is the reverse order of removal. Note the following:

- Perform the final tightening of each of parts under unladen conditions, which were removed when removing wheel hub and bearing assembly and steering knuckle. Check the wheel alignment. Refer to RSU-2, "Precaution for Supplemental Restraint System (SRS) "AIR BAG" and "SEAT BELT PRE-TENSIONER"" .
- When installing disc rotor on wheel hub and bearing assembly, align the marks.
  (When not using the alignment mark, refer to BR-25, "Disassembly and Assembly of Brake Caliper Assembly" .)

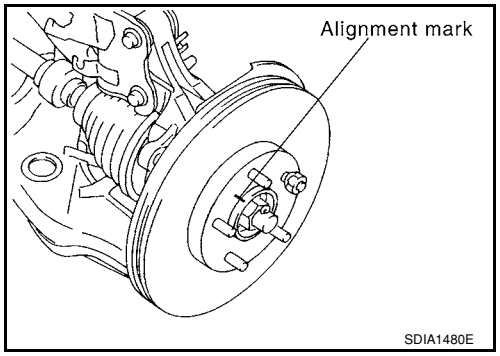

FRONT DRIVE SHAFT

On-Vehicle Inspection and Service

INFOID:0000000001703703

- Check drive shaft mounting point and joint for looseness and other damage.
- Check boot for cracks and other damage.

Replace or repair components as necessary. Refer to FAX-8, "Removal and Installation (Left Side)" , FAX-9, "Removal and Installation (Right Side)" , FAX-12, "Disassembly and Assembly (Left Side)" or FAX-17, "Disassembly and Assembly (Right Side)" .

CAUTION:

Replace entire drive shaft assembly when noise or vibration occur from drive shaft.

Removal and Installation (Left Side)

INFOID:0000000001703704

COMPONENTS

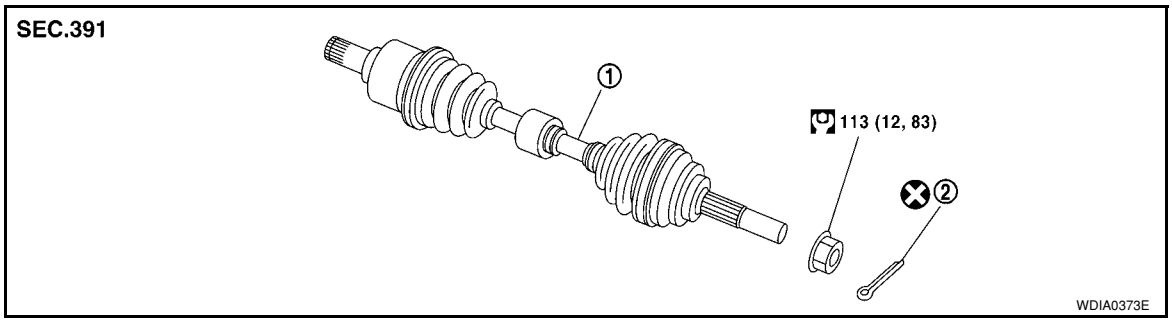

1. Drive shaft
2. Cotter pin

REMOVAL

1. Remove wheel and tire using power tool. Refer to WT-6, "Rotation" .
2. Remove wheel sensor from steering knuckle. Refer to BRC-32, "Removal and Installation".
   CAUTION:
   Do not pull on wheel sensor harness.
3. Remove transverse link ball joint nut and bolt. Then, remove transverse link from steering knuckle.
4. Remove cotter pin, then loosen hub lock nut using power tool.
   CAUTION:
   Temporarily leave the hub lock nut installed to prevent damage to threads.
5. Separate the drive shaft from the wheel hub and bearing assembly by lightly tapping the end of the drive shaft using a hammer or suitable tool and wood block, and then remove hub lock nut.
   NOTE:
   Use a suitable puller if wheel hub and bearing assembly and drive shaft cannot be separated after performing the above procedure.

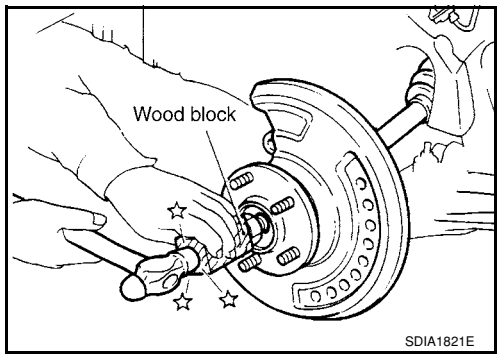

6. Remove the drive shaft from the wheel hub and bearing assembly.
   CAUTION:
   - **Do not apply an excessive angle to drive shaft joint when removing from the wheel hub and bearing assembly,**
   - **Do not excessively extend slide joint.**
   - **Do not allow drive shaft to hang down. Support the entire drive shaft.**

7. Pry off drive shaft from transaxle assembly side as shown.
   - Make sure that circlip is attached on the edge.

   CAUTION:
   - **Do not apply an excessive angle to drive shaft joint when removing from the transaxle.**
   - **Do not excessively extend slide joint.**
   - **Do not allow drive shaft to hang down. Support the entire drive shaft.**

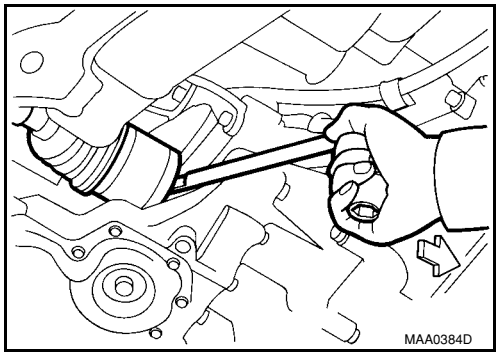

INSPECTION AFTER REMOVAL

- Move joint up/down, left/right, and in axial direction. Check for any rough movement or significant looseness.
- Check boot for cracks or other damage, and for grease leakage.
- If damaged, disassemble drive shaft to verify damage, and repair or replace as necessary.

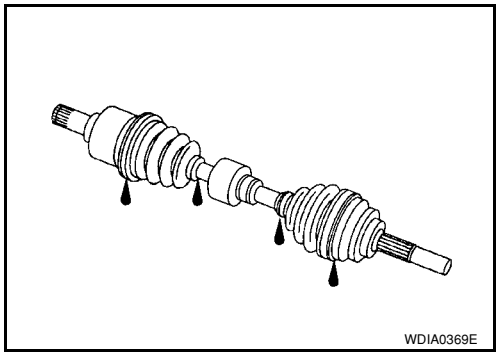

INSTALLATION

Installation is in the reverse order of removal. Note the following:

- Refer to "COMPONENTS" for tightening torque.

  CAUTION:
  Do not reuse non-reusable parts.
- In order to prevent damage to differential side oil seal, place Tool onto oil seal before inserting drive shaft as shown. Slide drive shaft into slide joint and tap with a hammer to install securely.

  Tool number : KV38105500 (J-33904)
- Install new circlip on drive shaft in the circlip groove on transaxle side. Refer to FAX-12, "Disassembly and Assembly (Left Side)" .

  CAUTION:
  Make sure the new circlip on the drive shaft is securely fastened.
- After its insertion, try to pull the flange out of the slide joint by hand. If it pulls out, the circlip is not properly meshed with the transaxle side gear.

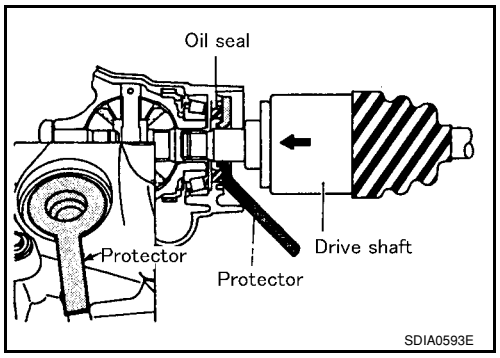

Removal and Installation (Right Side)

INFOID:0000000001703705

COMPONENTS

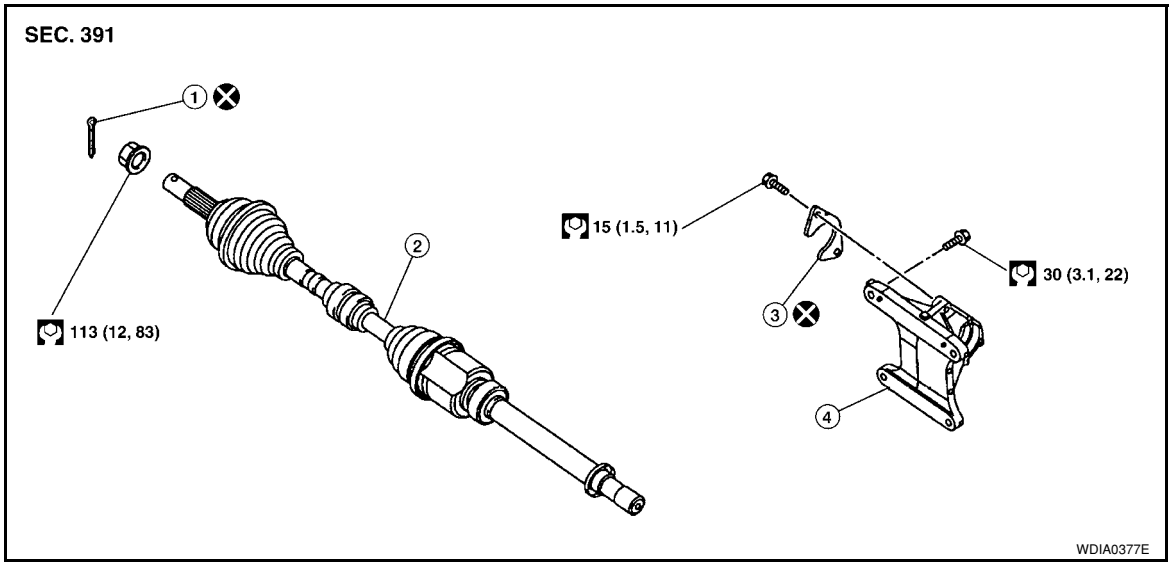

1. Cotter pin
2. Drive shaft
3. Plate
4. Support bearing bracket

REMOVAL

1. Remove wheel and tire using power tool. Refer to WT-6, "Rotation" .
2. Remove wheel sensor from steering knuckle. Refer to BRC-32, "Removal and Installation".
   CAUTION:
   Do not pull on wheel sensor harness.
3. Remove transverse link ball joint nut and bolt. Then, remove transverse link from steering knuckle.
4. Remove cotter pin, then loosen hub lock nut using power tool.
   CAUTION:
   Temporarily leave the hub lock nut installed to prevent damage to threads.
5. Separate the drive shaft from the wheel hub and bearing assembly by lightly tapping the end of the drive shaft using a hammer or suitable tool and wood block, and then remove hub lock nut.
   NOTE:
   Use a suitable puller if wheel hub and bearing assembly and drive shaft cannot be separated after performing the above procedure.

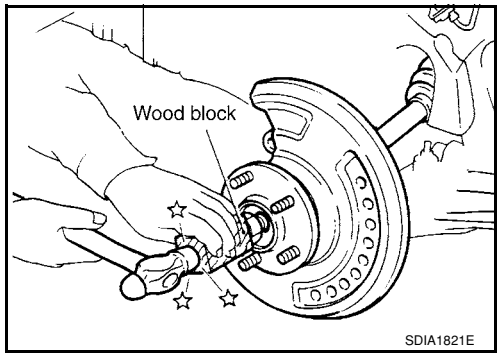

6. Remove the drive shaft from the wheel hub and bearing assembly.
   CAUTION:
   - **Do not apply an excessive angle to drive shaft joint when removing from the wheel hub and bearing assembly,**
   - **Do not excessively extend slide joint.**
   - **Do not allow drive shaft to hang down. Support the entire drive shaft.**
7. Remove the plate bolts and plate.
8. Remove the drive shaft from the transaxle assembly.
   CAUTION:
   - **Do not apply an excessive angle to drive shaft joint when removing from the transaxle.**
   - **Do not excessively extend slide joint.**
   - **Do not allow drive shaft to hang down. Support the entire drive shaft.**
9. If necessary, remove the support bearing bracket bolts and the support bearing bracket.

INSPECTION AFTER REMOVAL

- Move joint up/down, left/right, and in axial direction. Check for any rough movement or significant looseness.

- Check boot for cracks or other damage, and for grease leakage.
- If damaged, disassemble drive shaft to verify damage, and repair or replace as necessary.
- Check for cracks or other damage to the support bearing bracket, replace as necessary.

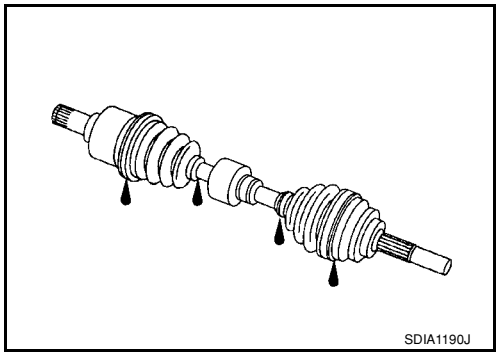

INSTALLATION

Installation is in the reverse order of removal. Note the following:

- Refer to "COMPONENTS" for tightening torque.

CAUTION:

Do not reuse non-reusable parts.

- In order to prevent damage to differential side oil seal, place Tool onto oil seal before inserting drive shaft as shown. Slide drive shaft into slide joint and tap with a hammer to install securely.

Tool number : KV38106700 (J-34296)

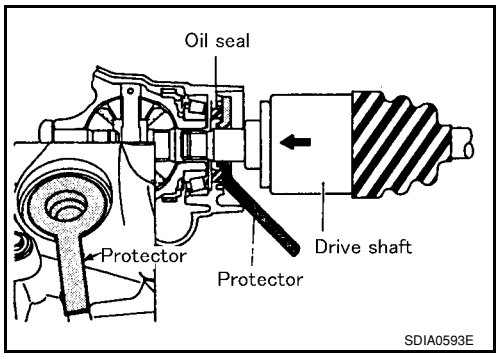

- When installing the support bearing bracket (1), note the following:
  a. Tighten the support bearing bracket bolts in two stages, in the order as shown.
  b. Install the plate (2) with the notch (A) upward. Tighten the plate bolts in two stages, in the order as shown.

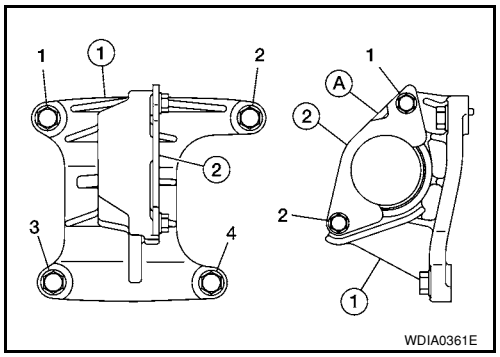

Disassembly and Assembly (Left Side)

INFOID:0000000001703706

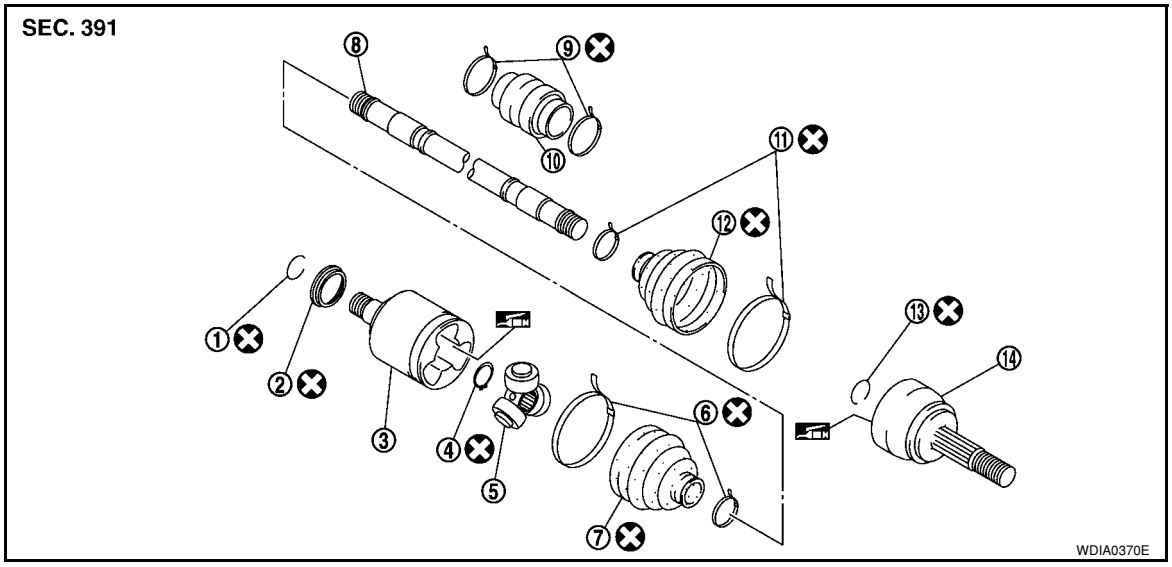

1. Circlip	2. Dust shield	3. Slide joint housing
4. Snap ring	5. Spider assembly	6. Boot band
7. Boot	8. Shaft	9. Damper band
10. Damper	11. Boot band	12. Boot
13. Circlip	14. Joint sub-assembly	

DISASSEMBLY

Transaxle Side

1. Mount drive shaft in a vise.
   CAUTION:
   When mounting shaft in a vise, always use copper or aluminum plates between vise and shaft.
2. Remove boot bands and slide the boot back.
3. Remove circlip and dust shield from slide joint housing.
4. Put matching marks on slide joint housing and shaft, then pull out shaft from slide joint housing.
5. Put matching marks on spider assembly and shaft.

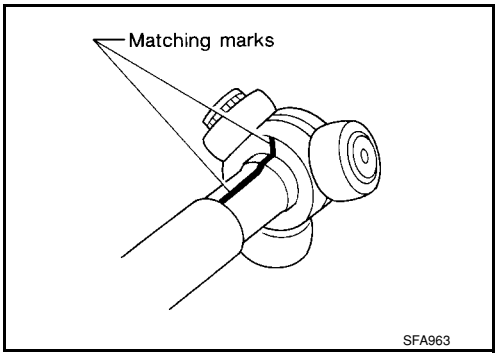

6. Remove snap ring using a suitable tool, then remove spider assembly from shaft.
7. Remove boot from shaft.
8. Clean the old grease off of the slide joint assembly.

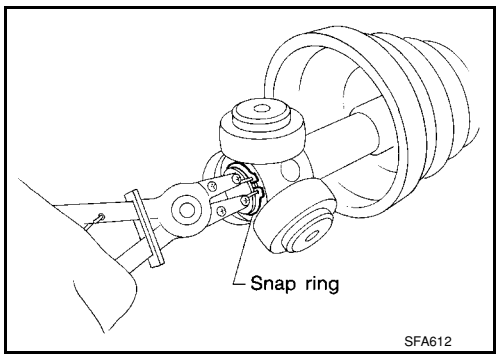

Wheel Side

1. Mount the front drive shaft in a vise.
   CAUTION:
   When mounting shaft in a vise, always use copper or aluminum plates between vise and shaft.
2. Remove boot bands and slide the boot back.
3. Screw a sliding hammer or suitable tool 30 mm (1.18 in) or more into threaded part of joint sub-assembly. Pull joint sub-assembly out of shaft.
   CAUTION:
   - **Align sliding hammer or suitable tool and drive shaft then remove joint sub-assembly by pulling directly.**
   - **If joint sub-assembly cannot be removed after five or more unsuccessful attempts, replace the entire drive shaft assembly.**

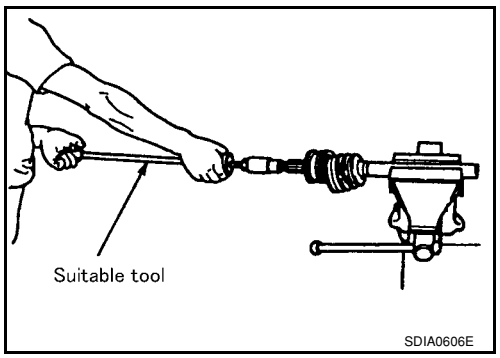

4. Remove circlip from shaft.
5. Remove boot from shaft.
6. While rotating ball cage, clean the old grease off of the joint sub-assembly.

Damper

- Remove damper bands, then remove damper from shaft.

INSPECTION AFTER DISASSEMBLY

Shaft

Replace shaft if there is bending, cracking, or other damage.

Joint Sub-Assembly

- Make sure there is no rough rotation or unusual axial looseness.
- Make sure there is no foreign material inside joint sub-assembly.
- Check joint sub-assembly for compression scars, cracks or fractures.

CAUTION:
If there are any irregular conditions of joint sub-assembly components, replace the entire joint sub-assembly.

Slide Joint Housing and Spider Assembly

Make sure there are no compression scars, cracks, fractures or unusual wear of housing or spider roller contact surface.

CAUTION:
If there are any irregular conditions of the slide joint housing and spider assembly components, replace them as a set.

Damper

Check damper for cracks or wear. Replace as necessary.

ASSEMBLY

Transaxle Side

1. Install new boot and new small boot band on shaft.
   CAUTION:
   - **Do not reuse boot or boot band.**
   - **Cover drive shaft serration with tape to prevent damage to boot during installation.**
2. Remove protective tape wound around serrated part of shaft.

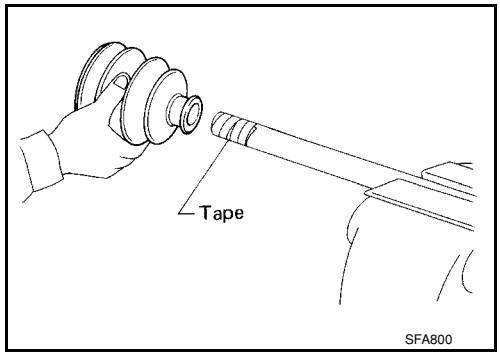

3. Align matching mark on spider assembly with matching mark on shaft and install spider assembly with chamfer facing shaft.

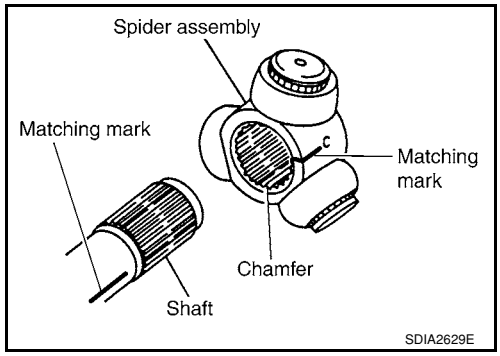

4. Install new snap ring using a suitable tool.
   CAUTION:
   Do not reuse snap ring.
5. Apply recommended grease (Genuine NISSAN Grease or equivalent) to spider assembly and sliding surface.
6. Install the slide joint housing onto the spider assembly and pack with the balance of recommended grease (Genuine NISSAN Grease or equivalent).

   Grease amount : 130 – 140 g (4.6 – 4.9 oz)

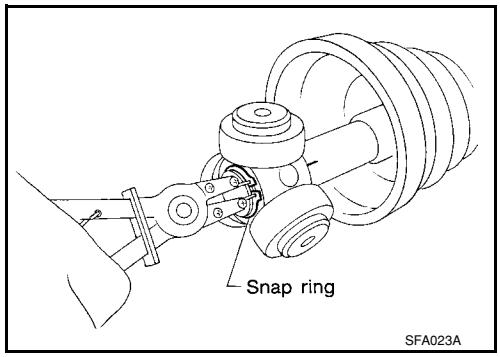

7. Install boot securely into grooves (indicated by * marks) as shown.
   CAUTION:
   If there is grease on boot mounting surfaces (indicated by * marks) of shaft and housing, boot may come off. Clean all grease from surfaces.
8. Make sure boot installation length “L” is the length specified below. Insert a flat-bladed screwdriver or similar tool into the large end of boot. Bleed air from boot to prevent boot deformation.

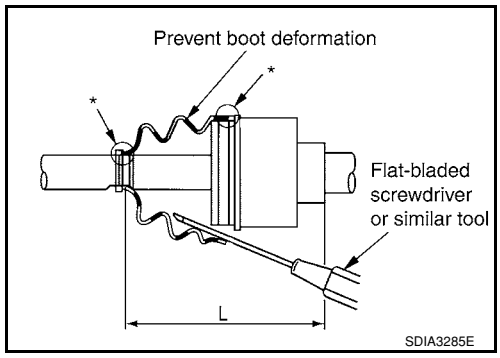

   Boot installation length “L ”

M/T models	**: 181.2 mm (7.13 in)**
Except for M/T models	**: 176.0 mm (6.93 in)**

   CAUTION:
   - **Boot may break if boot installation length is outside the standard value.**
   - **Be careful that screwdriver tip does not contact inside surface of boot.**
9. Secure large end of boot with new boot band.
   1. Set boot band onto boot and insert first pawl on boot band into the first groove on opposite end of boot band.

2. Pull and tighten the boot band using suitable tool until both pawls of boot band are secured in the boot band grooves.

CAUTION:
Do not reuse boot band.

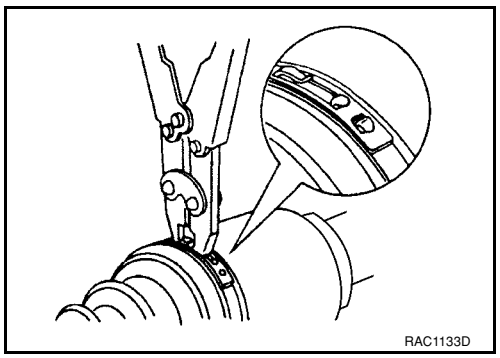

10. Install new small boot band securely using Tool.

Tool number : KV40107300 (—)

CAUTION:
- **Do not reuse boot band.**
- **Secure boot band so that dimension "M" meets specification as shown.**

Dimension "M" : 1.0 – 4.0 mm (0.039 – 0.157 in)

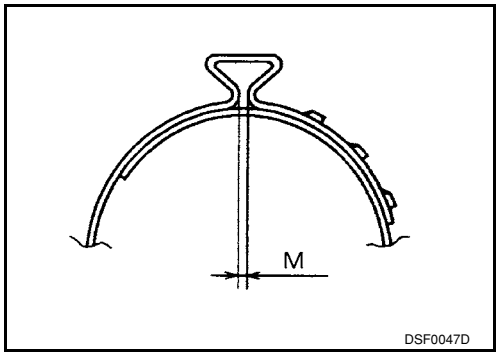

11. Rotate the slide joint and confirm that the boot position is correct. If boot position is not correct, remove the boot bands, reposition the boot and install new boot bands.
12. Install new dust shield to slide joint housing.

CAUTION:
Do not reuse dust shield.

Wheel Side

1. Insert recommended grease (Genuine NISSAN Grease or equivalent) into joint sub-assembly serration hole until grease begins to ooze from ball groove and serration hole. After inserting grease, use a shop cloth to wipe off old grease that has oozed out.

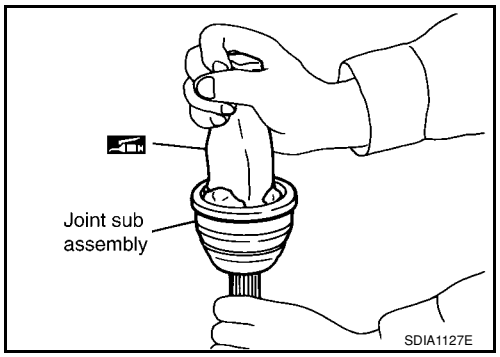

2. Cover serrated part of shaft with tape. Install new boot band and new boot to shaft.

CAUTION:
Do not reuse boot or boot band.

3. Remove protective tape wound around serrated part of shaft.

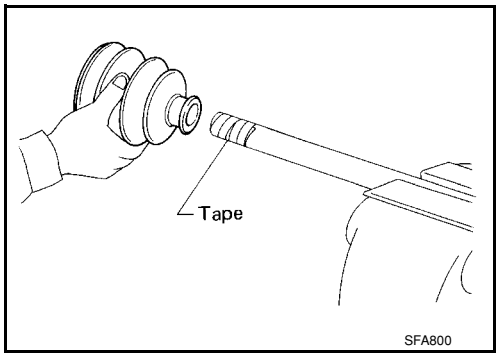

4. Attach new circlip to shaft. Thread nut onto end of joint sub-assembly and press fit using suitable tool.
   CAUTION:
   - **Do not reuse circlip.**
   - **Circlip must fit securely into shaft groove.**

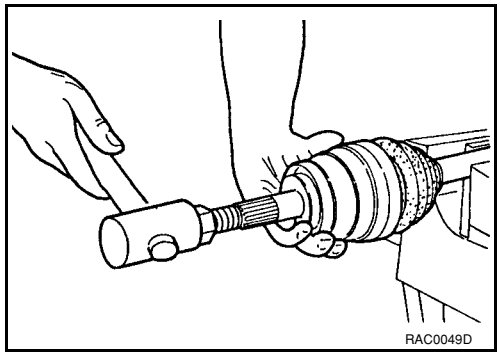

5. Insert the balance of new grease (Genuine NISSAN Grease or equivalent) listed below into housing from large end of boot.

   Grease amount : 70 – 90 g (2.5 – 3.2 oz)

6. Install boot securely into grooves (indicated by * marks) as shown.
   CAUTION:
   If there is grease on boot mounting surfaces (indicated by * marks) of shaft and housing, boot may come off. Remove all grease from surfaces.
7. Make sure boot installation length "L" is the specified length indicated below. Insert a flat-bladed screwdriver or similar tool into the large end of boot. Bleed air from boot to prevent boot deformation.

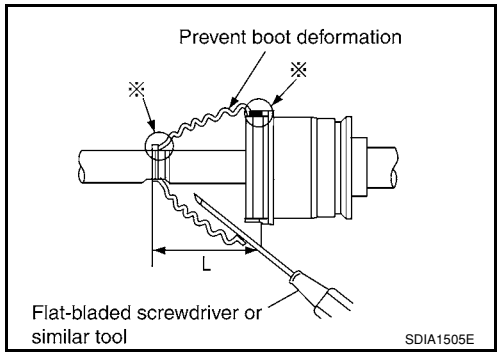

   Boot installation length "L" : 142 mm (5.59 in)

   CAUTION:
   - **Boot may break if boot installation length is outside the standard value.**
   - **Be careful that screwdriver tip does not contact inside surface of boot.**
8. Install new large and small boot bands securely using Tool.

   Tool number : KV40107300 (—)

   CAUTION:
   - **Do not reuse boot bands.**

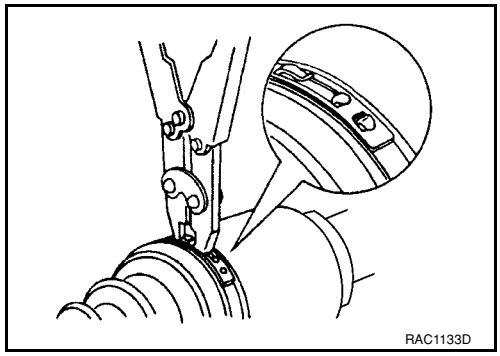

   - **Secure boot band so that dimension "M" meets specification as shown.**

   Dimension "M" : 1.0 – 4.0 mm (0.039 – 0.157 in)

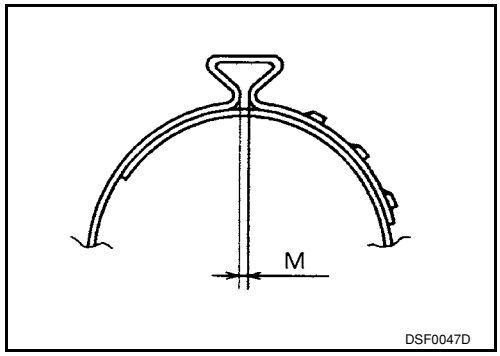

9. Rotate the joint sub assembly and confirm that the boot position is correct. If boot position is not correct, remove the boot bands, reposition the boot and install new boot bands.

Damper

1. Secure damper with new damper bands.

"A"	Except for CVT models	: 230 – 236 mm (9.06 – 9.29 in)
	CVT models	: 225 – 231 mm (8.86 – 9.09 in)
"B"		: 70 mm (2.76 in)

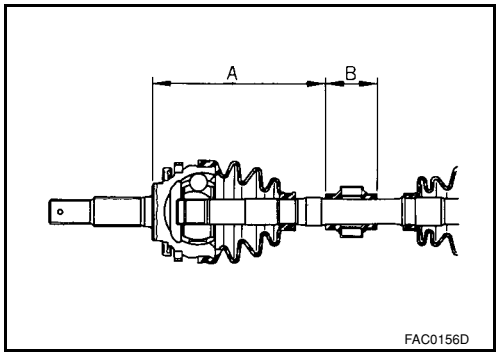

CAUTION:
Do not reuse damper bands.

Disassembly and Assembly (Right Side)

INFOID:0000000001703707

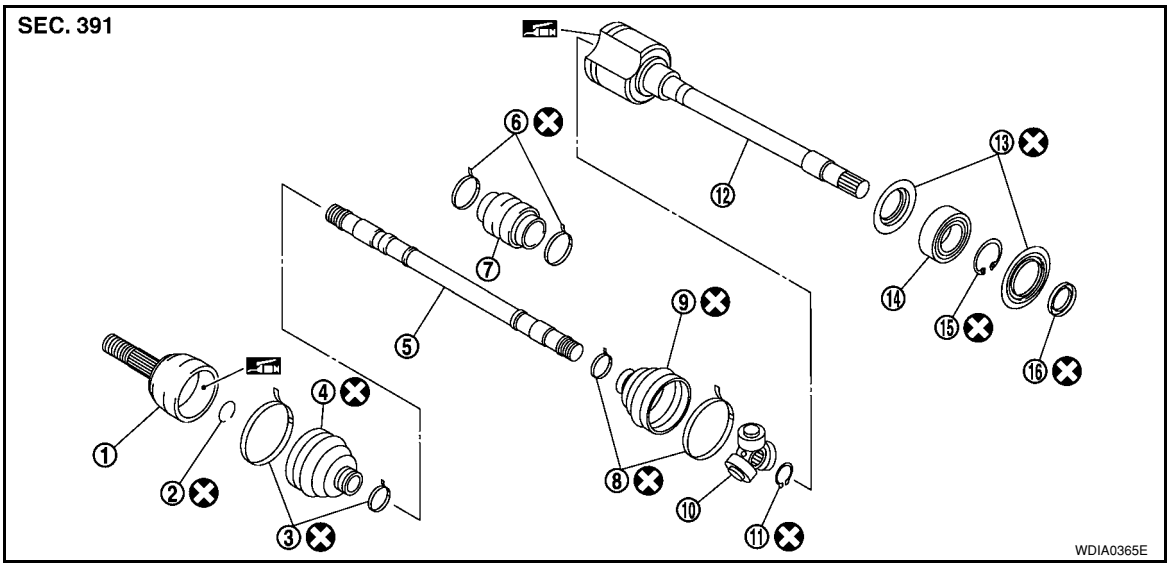

1.	Joint sub-assembly	2.	Circlip	3.	Boot bands
4.	Boot	5.	Shaft	6.	Damper bands
7.	Damper	8.	Boot band	9.	Boot
10.	Spider assembly	11.	Snap ring	12	Slide joint housing
13.	Dust shield	14.	Bearing	15.	Snap ring
16.	Dust shield				

DISASSEMBLY

Transaxle Side

1. Mount drive shaft in a vise.
   CAUTION:
   When mounting shaft in a vise, always use copper or aluminum plates between vise and shaft.
2. Remove boot bands and slide the boot back.
3. Put matching marks on slide joint housing and shaft, then pull out shaft from slide joint housing.

4. Put matching marks on spider assembly and shaft.

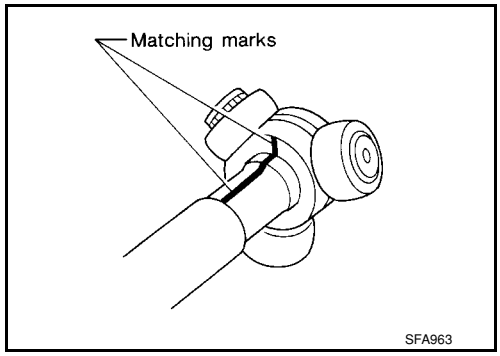

5. Remove snap ring using a suitable tool, then remove spider assembly from shaft.
6. Remove boot from shaft.
7. Clean the old grease off of the slide joint assembly.

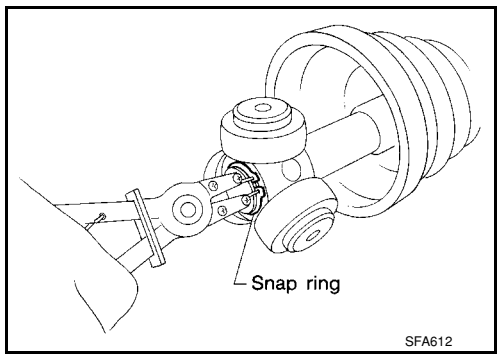

Wheel Side

1. Mount the front drive shaft in a vise.
   CAUTION:
   When mounting shaft in a vise, always use copper or aluminum plates between vise and shaft.
2. Remove boot bands and slide the boot back.
3. Screw a sliding hammer or suitable tool 30 mm (1.18 in) or more into threaded part of joint sub-assembly. Pull joint sub-assembly out of shaft.
   CAUTION:
   - **Align sliding hammer or suitable tool and drive shaft then remove joint sub-assembly by pulling directly.**
   - **If joint sub-assembly cannot be removed after five or more unsuccessful attempts, replace the entire drive shaft assembly.**

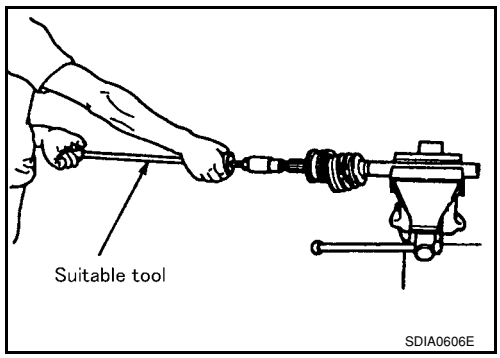

4. Remove circlip from shaft.
5. Remove boot from shaft.
6. While rotating ball cage, clean the old grease off of the joint sub-assembly.

Support Bearing

1. Remove dust shield from slide joint assembly using a suitable tool.

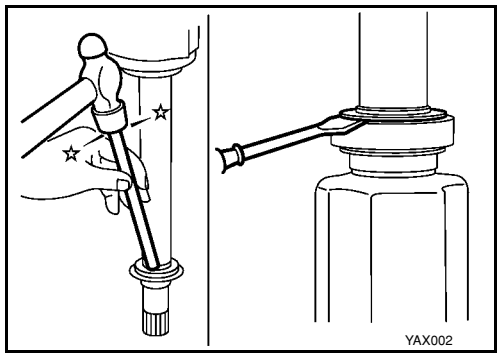

2. Remove dust shield, then remove snap ring using a suitable tool.

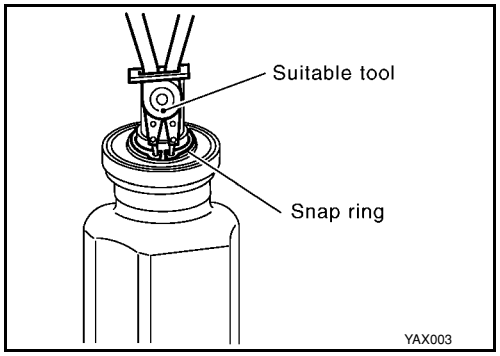

3. Press support bearing assembly off slide joint assembly using a suitable tool.
4. Remove dust shield.

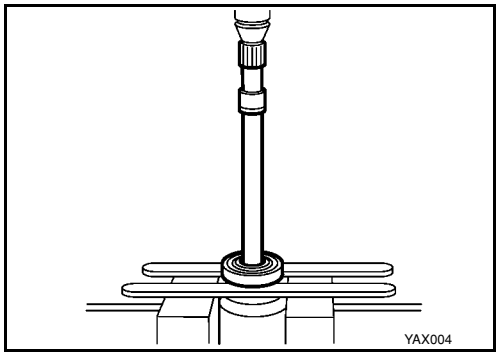

Damper
- Remove damper bands, then remove damper from shaft.

INSPECTION AFTER DISASSEMBLY

Shaft
Replace shaft if there is bending, cracking, or other damage.

Joint Sub-Assembly
- Make sure there is no rough rotation or unusual axial looseness.
- Make sure there is no foreign material inside joint sub-assembly.
- Check joint sub-assembly for compression scars, cracks or fractures.

CAUTION:
If there are any irregular conditions of joint sub-assembly components, replace the entire joint sub-assembly.

Slide Joint Housing and Spider Assembly
Make sure there are no compression scars, cracks, fractures or unusual wear of housing or spider roller contact surface.

CAUTION:
If there are any irregular conditions of the slide joint housing and spider assembly components, replace them as a set.

Support Bearing
Make sure wheel bearing rolls freely and is free from noise, cracks, pitting or wear.

Support Bearing Bracket
Check for bending, cracks, or damage.

Damper
Check damper for cracks or wear. Replace as necessary.

ASSEMBLY

Transaxle Side

1. Install new boot and new small boot band on shaft.
   CAUTION:
   - **Do not reuse boot or boot band.**
   - **Cover drive shaft serration with tape to prevent damage to boot during installation.**
2. Remove protective tape wound around serrated part of shaft.

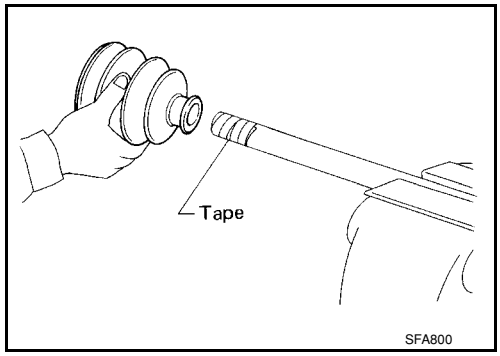

3. Align matching mark on spider assembly with matching mark on shaft and install spider assembly with chamfer facing shaft.

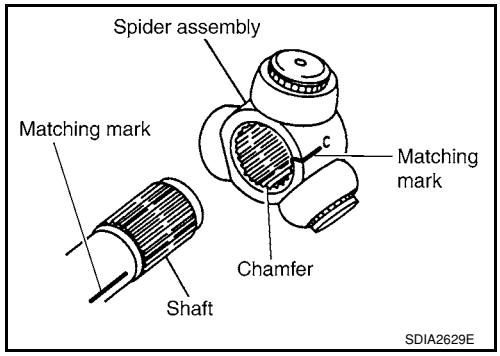

4. Install new snap ring using a suitable tool.
   CAUTION:
   Do not reuse snap ring.
5. Apply recommended grease (Genuine NISSAN Grease or equivalent) to spider assembly and sliding surface.
6. Install the slide joint housing onto the spider assembly and pack with the balance of recommended grease (Genuine NISSAN Grease or equivalent).

   Grease amount : 130 – 140 g (4.6 – 4.9 oz)

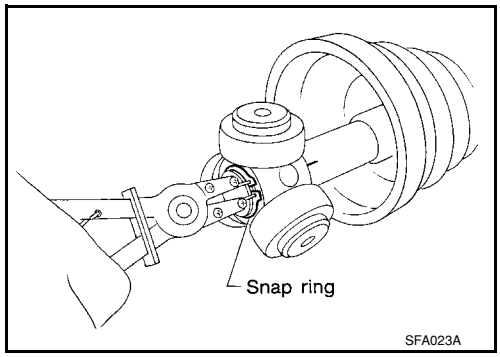

7. Install boot securely into grooves (indicated by * marks) as shown.
   CAUTION:
   If there is grease on boot mounting surfaces (indicated by * marks) of shaft and housing, boot may come off. Clean all grease from surfaces.
8. Make sure boot installation length “L” is the length specified below. Insert a flat-bladed screwdriver or similar tool into the large end of boot. Bleed air from boot to prevent boot deformation.

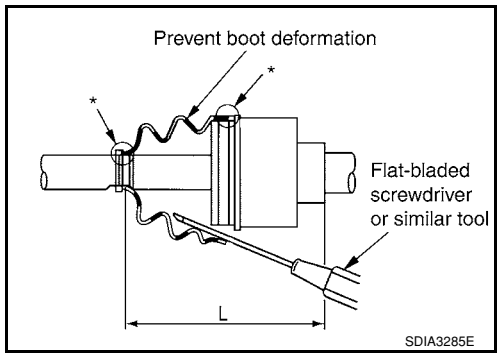

   Boot installation length “L ”

A/T models	**: 178 mm (7.01 in)**
Except for A/T models	**: 168 mm (6.61 in)**

   CAUTION:
   - **Boot may break if boot installation length is outside the standard value.**
   - **Be careful that screwdriver tip does not contact inside surface of boot.**
9. Secure large end of boot with new boot band.
   1. Set boot band onto boot and insert first pawl on boot band into the first groove on opposite end of boot band.

2. Pull and tighten the boot band using suitable tool until both pawls of boot band are secured in the boot band grooves.

CAUTION:
Do not reuse boot band.

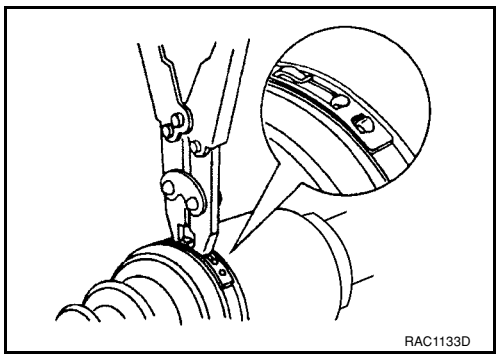

10. Install new small boot band securely using Tool.

Tool number : KV40107300 (—)

CAUTION:
- **Do not reuse boot band.**
- **Secure boot band so that dimension "M" meets specification as shown.**

Dimension "M" : 1.0 – 4.0 mm (0.039 – 0.157 in)

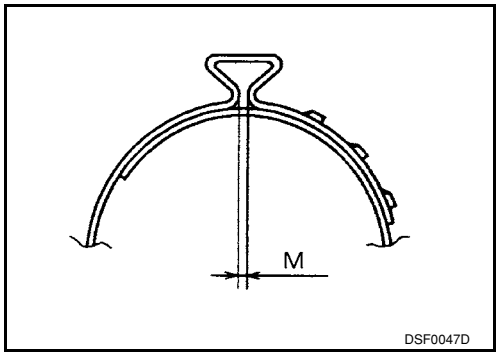

11. Rotate the slide joint and confirm that the boot position is correct. If boot position is not correct, remove the boot bands, reposition the boot and install new boot bands.

Wheel Side

1. Insert recommended grease (Genuine NISSAN Grease or equivalent) into joint sub-assembly serration hole until grease begins to ooze from ball groove and serration hole. After inserting grease, use a shop cloth to wipe off old grease that has oozed out.

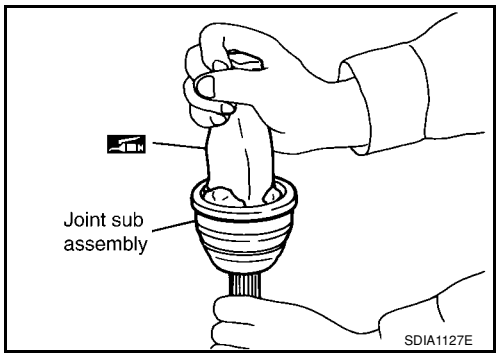

2. Cover serrated part of shaft with tape. Install new boot band and new boot to shaft.

CAUTION:
Do not reuse boot or boot band.

3. Remove protective tape wound around serrated part of shaft.

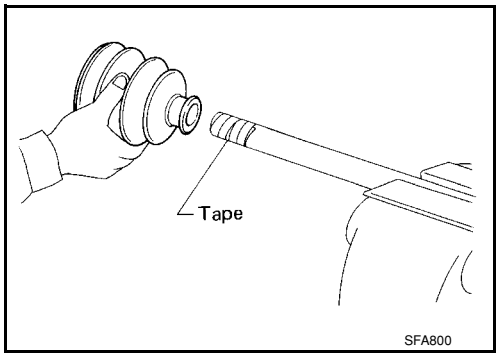

4. Attach new circlip to shaft. Thread nut onto end of joint sub-assembly and press fit using suitable tool.
   CAUTION:
   - **Do not reuse circlip.**
   - **Circlip must fit securely into shaft groove.**

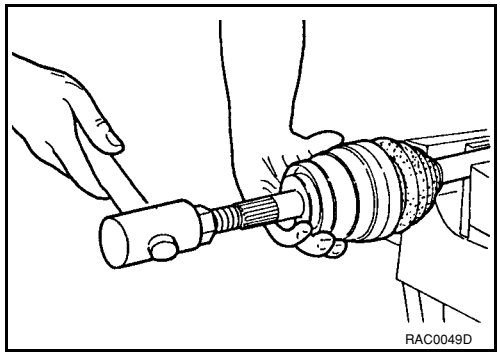

5. Insert the balance of new grease (Genuine NISSAN Grease or equivalent) listed below into housing from large end of boot.

   Grease amount : 70 – 90 g (2.5 – 3.2 oz)

6. Install boot securely into grooves (indicated by * marks) as shown.
   CAUTION:
   If there is grease on boot mounting surfaces (indicated by * marks) of shaft and housing, boot may come off. Remove all grease from surfaces.
7. Make sure boot installation length “L” is the specified length indicated below. Insert a flat-bladed screwdriver or similar tool into the large end of boot. Bleed air from boot to prevent boot deformation.

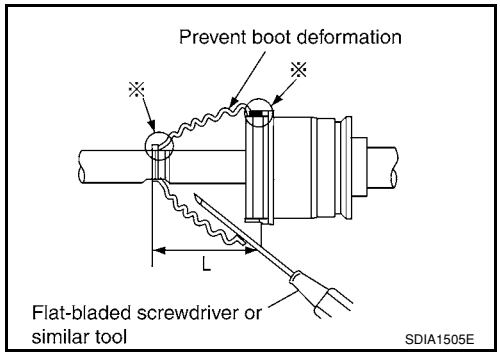

   Boot installation length “L” : 142 mm (5.59 in)

   CAUTION:
   - **Boot may break if boot installation length is outside the standard value.**
   - **Be careful that screwdriver tip does not contact inside surface of boot.**
8. Install new large and small boot bands securely using Tool.

   Tool number : KV40107300 (—)

   CAUTION:
   - **Do not reuse boot bands.**

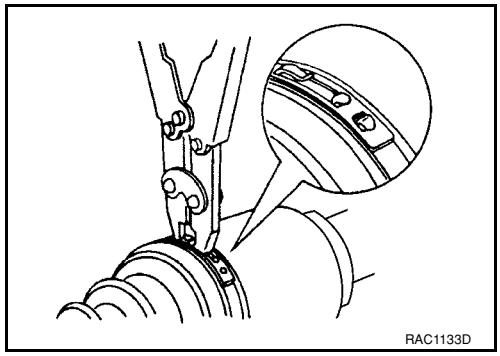

   - **Secure boot band so that dimension “M” meets specification as shown.**

   Dimension “M” : 1.0 – 4.0 mm (0.039 – 0.157 in)

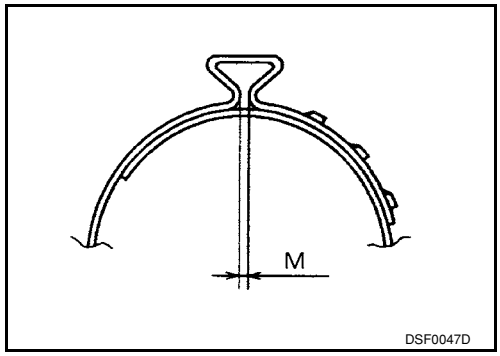

9. Rotate the joint sub assembly and confirm that the boot position is correct. If boot position is not correct, remove the boot bands, reposition the boot and install new boot bands.

Support Bearing

1. Install new dust shield on drive shaft
   CAUTION:
   Do not reuse dust shield.
2. Press support bearing onto drive shaft.

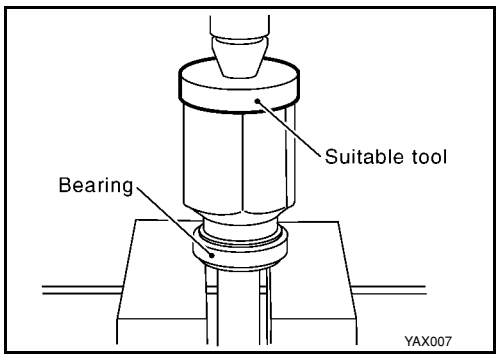

3. Install new snap ring.
   CAUTION:
   Do not reuse snap ring.
4. Install new dust shield
   CAUTION:
   Do not reuse dust shield.

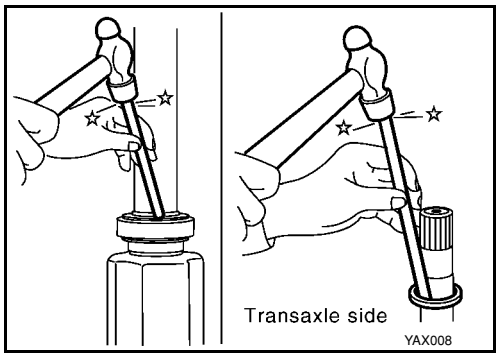

Damper

1. Secure damper with new damper bands.

"A"	**Except for CVT models**	**: 230 – 236 mm (9.06 – 9.29 in)**
	CVT models	**: 225 – 231 mm (8.86 – 9.09 in)**
"B"		**: 70 mm (2.76 in)**

CAUTION:
Do not reuse damper bands.

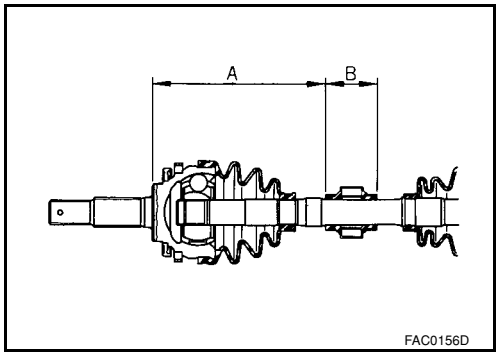

SERVICE DATA AND SPECIFICATIONS (SDS)

Drive Shaft

INFOID:0000000001703708

Joint type		Wheel side	Transaxle side
Grease quantity		70 - 90 g (2.5 - 3.2 oz)	130 - 140 g (4.6 - 4.9 oz)
Boots installed length	Left side	142 mm (5.59 in)	181.2 mm (7.13 in) (M/T models) 176 mm (6.93 in) (Except for M/T models)
	Right side		178 mm (7.01 in) (A/T models) 168 mm (6.61 in) (Except for A/T models)

Dynamic Damper

INFOID:0000000001703709

Dimension A	Except for CVT models	230 – 236 mm (9.06 – 9.29 in)
	CVT models	225 – 231 mm (8.86 – 9.09 in)
Dimension B		70 mm (2.76 in)

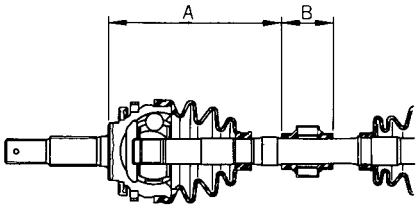

FAC0156D

SECTION FL
FUEL SYSTEM

CONTENTS

SERVICE INFORMATION 2

PRECAUTIONS 2
Precaution for Supplemental Restraint System (SRS) "AIR BAG" and "SEAT BELT PRE-TENSIONER" 2

PREPARATION 3
Special Service Tool 3
Commercial Service Tool 3

FUEL SYSTEM 4
Checking Fuel Line 4
General Precaution 4

FUEL LEVEL SENSOR UNIT, FUEL FILTER AND FUEL PUMP ASSEMBLY 5
Component 5
Removal and Installation 5

FUEL TANK 9
Component 9
Removal and Installation 9

SERVICE DATA AND SPECIFICATIONS (SDS) 14
Standard and Limit 14

SERVICE INFORMATION

PRECAUTIONS

Precaution for Supplemental Restraint System (SRS) "AIR BAG" and "SEAT BELT PRE-TENSIONER"

INFOID:0000000001703094

The Supplemental Restraint System such as “AIR BAG” and “SEAT BELT PRE-TENSIONER”, used along with a front seat belt, helps to reduce the risk or severity of injury to the driver and front passenger for certain types of collision. This system includes seat belt switch inputs and dual stage front air bag modules. The SRS system uses the seat belt switches to determine the front air bag deployment, and may only deploy one front air bag, depending on the severity of a collision and whether the front occupants are belted or unbelted.
Information necessary to service the system safely is included in the SRS and SB section of this Service Manual.

WARNING:

- **To avoid rendering the SRS inoperative, which could increase the risk of personal injury or death in the event of a collision which would result in air bag inflation, all maintenance must be performed by an authorized NISSAN/INFINITI dealer.**
- **Improper maintenance, including incorrect removal and installation of the SRS, can lead to personal injury caused by unintentional activation of the system. For removal of Spiral Cable and Air Bag Module, see the SRS section.**
- **Do not use electrical test equipment on any circuit related to the SRS unless instructed to in this Service Manual. SRS wiring harnesses can be identified by yellow and/or orange harnesses or harness connectors.**

PREPARATION

Special Service Tool

INFOID:0000000001703095

The actual shapes of the Kent-Moore tools may differ from those of the special tools illustrated here.

Tool number (Kent-Moore No.) Tool name	Description
KV991J0090 (J-46214) Fuel tank lock ring tool 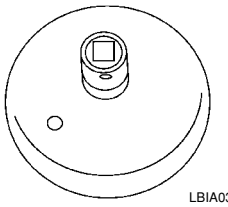 LBIA0353E	Removing and installing fuel tank lock ring

Commercial Service Tool

INFOID:0000000001703096

Tool name	Description
Power tools 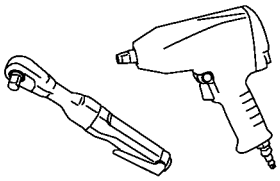 PBIC0190E	Loosening bolts and nuts

FUEL SYSTEM

Checking Fuel Line

INFOID:0000000001703097

Inspect fuel lines, fuel filler cap and fuel tank for improper attachment, leaks, cracks, damage, loose connections, chafing or deterioration.
If necessary, repair or replace damaged parts.

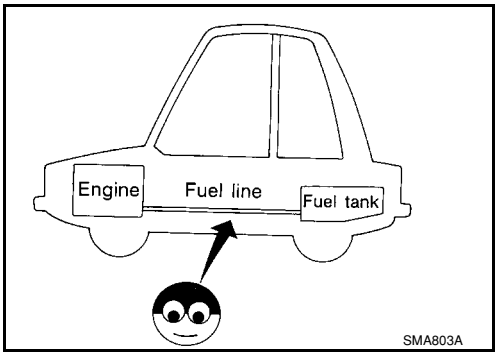

General Precaution

INFOID:0000000001703098

WARNING:
When replacing fuel line parts, be sure to observe the following.
- **Put a “CAUTION: FLAMMABLE” sign in the work area.**
- **Be sure to work in a well ventilated area and have a CO_2 fire extinguisher.**
- **Do not smoke while working on the fuel system. Keep open flames and sparks away from the work area.**
- **Put drained fuel in an explosion-proof container and put the lid on securely. Keep the container in safe area.**

CAUTION:
- **Use gasoline required by the regulations for octane number. Refer to GI-4, "Precaution for Fuel (Unleaded Regular Gasoline Recommended)".**
- **Before removing fuel line parts, perform the following procedures:**
- **Release fuel pressure from the fuel lines. Refer to EC-78, "Fuel Pressure Check".**
- **Disconnect the battery ground cable.**
- **Always replace O-rings and clamps with new ones.**
- **Do not kink or twist tubes when they are being installed.**
- **Perform work on level surface.**
- **Do not tighten hose clamps excessively to avoid damaging hoses.**
- **After connecting fuel tube quick connectors, make sure quick connectors are secure.**
  Ensure that connector and resin tube do not contact any adjacent parts.
- **After installing tubes, make sure there is no fuel leakage at connections in the following steps.**
- **Apply fuel pressure to fuel lines by turning ignition switch ON (without starting the engine). Then check for fuel leaks at the fuel tube connections.**
- **Start engine and rev it up and check for fuel leaks at connections.**
- **Use only a genuine NISSAN fuel filler cap as a replacement. If an incorrect fuel filler cap is used, the MIL may come on.**
- **For servicing “Evaporative Emission System” parts, refer to EC-31.**
- **For servicing "On Board Refueling Vapor Recovery (ORVR)" parts, refer to EC-38.**

FUEL LEVEL SENSOR UNIT, FUEL FILTER AND FUEL PUMP ASSEMBLY

Component

INFOID:0000000001703099

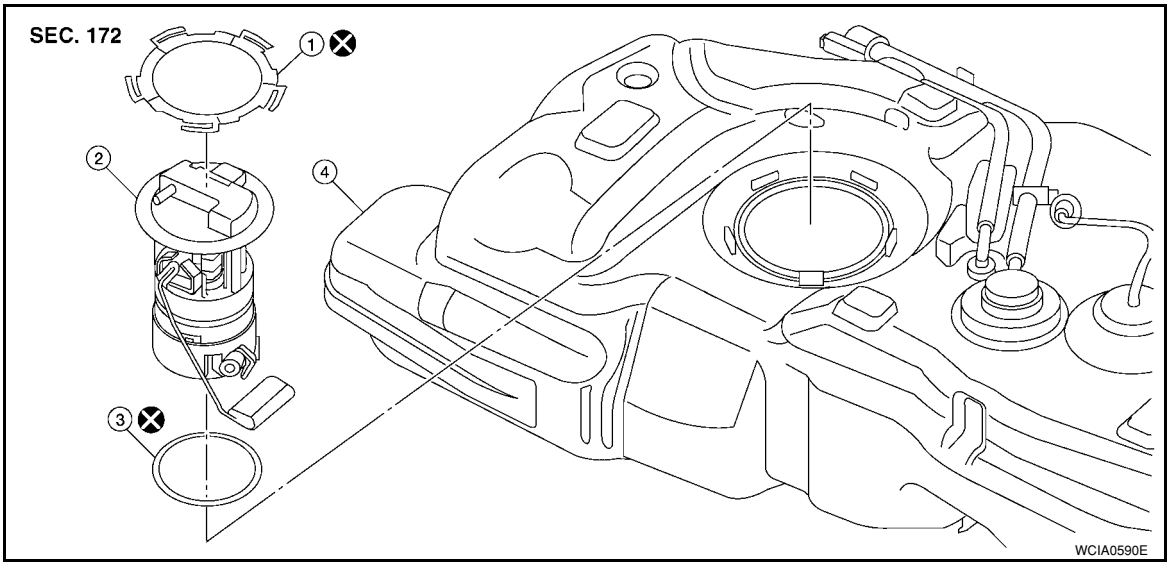

1. Lock ring
2. Fuel level sensor unit, fuel filter and fuel pump assembly
3. O-ring
4. Fuel tank

Removal and Installation

INFOID:0000000001703100

REMOVAL

WARNING:

Be sure to read "General Precautions" before working on the fuel system. Refer to FL-4, "General Precaution" .

1. Check fuel level with the vehicle on a level surface. If the fuel gauge indicates more than the level as shown (7/8 full), drain fuel from the fuel tank until the fuel gauge indicates level as shown (7/8 full).
   NOTE:
   Fuel will be spilled when removing fuel pump assembly if fuel level is above the fuel pump assembly installation surface.
   - As a guide, fuel level is at the level as shown or below when approximately 12 ℓ (3 1/8 US gal, 2 5/8 Imp gal) of fuel is drained from a full fuel tank.
   - In case fuel pump does not operate, perform the following procedure.

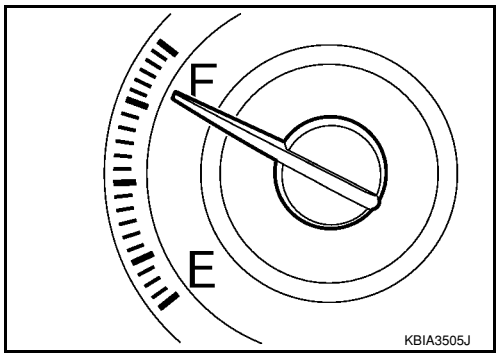

a. Insert fuel tubing of less than 25 mm (0.98 in) in diameter into fuel filler tube through fuel filler opening to drain fuel from fuel filler tube.
b. Disconnect fuel filler hose from fuel filler tube. Refer to FL-9 .
c. Insert fuel tubing into fuel tank through fuel filler hose to drain fuel from fuel tank.
2. Open fuel door and unscrew the fuel filler cap to release the pressure inside the fuel tank.
3. Release the fuel pressure from the fuel lines. Refer to EC-78, "Fuel Pressure Check" .
4. Remove rear seat bottom. Refer to SE-14 .
5. Turn the four retainers 90° in a clockwise direction and remove the fuel pump inspection hole cover.

6. Disconnect electrical connector (A) and fuel feed hose quick connector (B).
   - Fuel feed hose (1)
   - ⇐ : Vehicle front

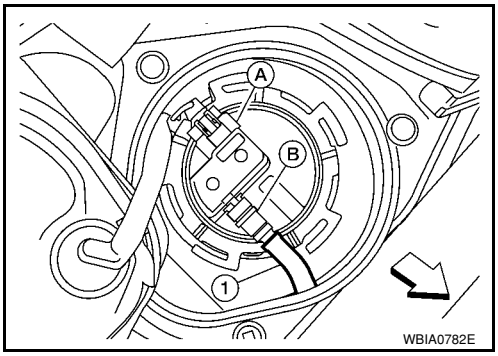

- Disconnect the quick connector using the following procedure.

- Hold the sides of the connector, push in tabs and pull out the tube.
- If quick connector and tube on fuel pump assembly are stuck, push and pull several times until they move. Disconnect them by pulling.

CAUTION:
- **The tube can be removed when the tabs are completely depressed. Do not twist it more than necessary.**
- **Do not use any tools to remove the quick connector.**
- **Keep resin tube away from heat. Be especially careful when welding near the resin tube.**
- **Prevent acid liquid such as battery electrolyte, from getting on resin tube.**
- **Do not bend or twist resin tube during installation and removal.**
- **To keep the connecting portion clean, free of foreign materials and to avoid damage, cover them completely with plastic bags or something similar.**
- **Do not insert plug to prevent damage to O-ring in quick connector.**

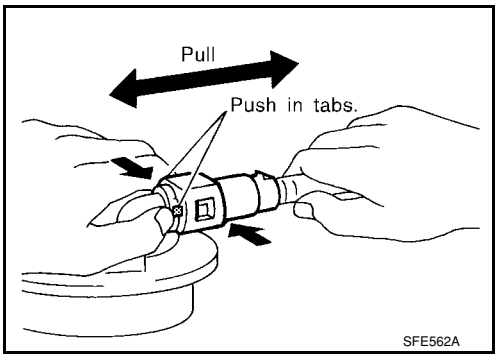

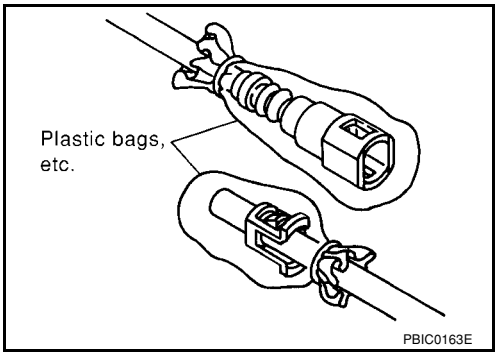

7. Remove the lock ring using Tool as shown.

Tool number : KV991J0090 (J-46214)

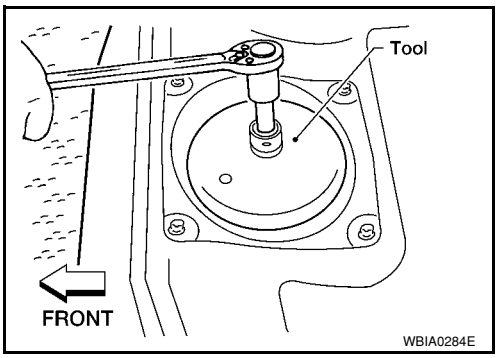

8. Remove fuel level sensor unit, fuel filter and fuel pump assembly (1).

CAUTION:
- **Do not bend float arm during removal.**
- **Do not allow foreign materials to fall into fuel tank. Use a lint free cloth when handling components.**
- **Avoid impacts such as dropping when handling components.**

INSPECTION AFTER REMOVAL

Make sure that the fuel level sensor unit, fuel filter and fuel pump is free from defects and foreign materials.

INSTALLATION

Installation is in the reverse order of removal.

Fuel Level Sensor Unit, Fuel Filter and Fuel Pump Assembly

1. Install O-ring to fuel tank without twisting.
2. Install fuel level sensor unit with aligning mating marks (A) on fuel tank and fuel level sensor unit as shown.
   - ⇐: Front

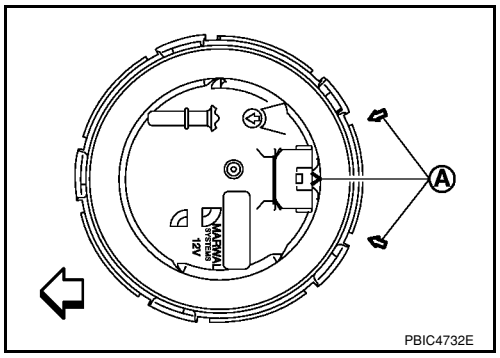

   - Turn the lock ring (1) until the lock ring is fully rotated into the fuel tank lock tabs (A) as shown.

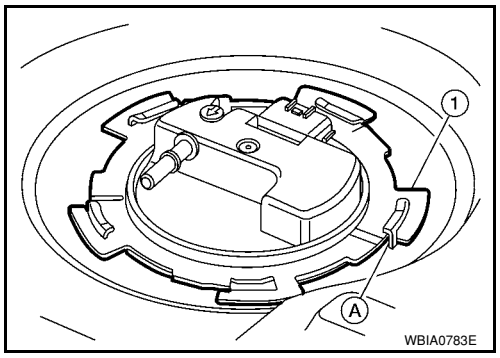

Quick Connector

Connect fuel feed tube quick connector using the following procedure.

1. Check the connection for damage or any foreign materials.
2. Align the connector with the tube, then insert the connector straight into the tube until a “click” sound is heard.
3. After connecting, make sure that the connection is secure using the following procedure.
   - Visually confirm that the two retainer tabs are secured to the connector.
   - Pull the tube and the connector to make sure they are securely connected.

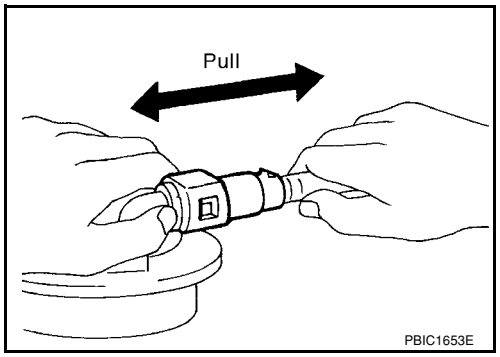

4. Connect electrical harness connector.

Inspection Hole Cover

- Before installing inspection hole cover, confirm that there are no fuel leaks. Refer to "INSPECTION AFTER INSTALLATION" .

1. Install inspection hole cover with the front mark (arrow) facing front of vehicle.
2. Lock clips by turning counterclockwise.

INSPECTION AFTER INSTALLATION

Use the following procedure to check for fuel leaks.

1. Turn ignition switch “ON” (without starting the engine), to check the connections for fuel leaks with the electric fuel pump applying pressure to the fuel piping.
2. Start the engine and let it idle to check that there are no fuel leaks at the fuel system connections.

FUEL TANK

Component

INFOID:0000000001703101

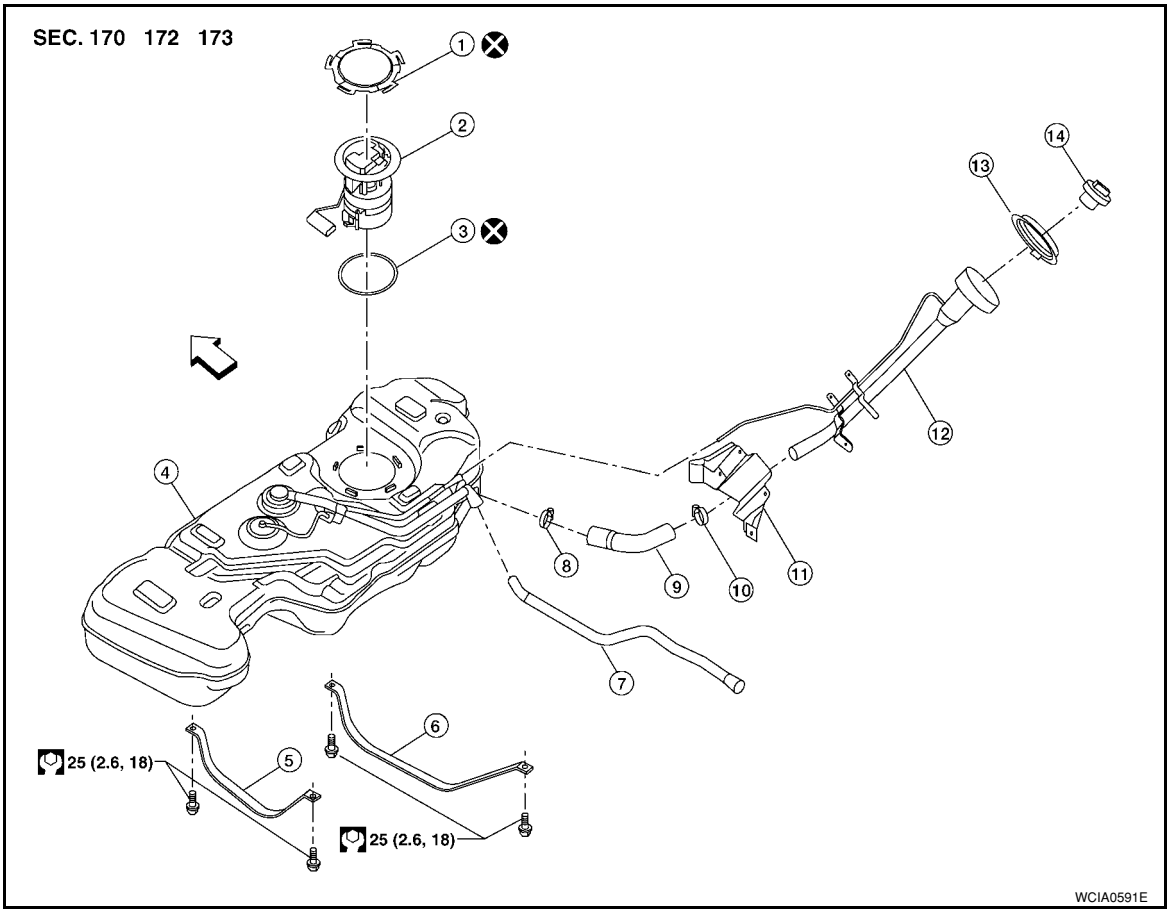

1.	Lock ring	2.	Fuel pump	3.	O-ring
4.	Fuel tank	5.	Fuel tank band (LH)	6.	Fuel tank band (RH)
7.	EVAP hose	8.	Hose clamp	9.	Fuel filler hose
10.	Hose clamp	11.	Fuel filler pipe shield	12.	Fuel filler tube
13.	Grommet	14.	Fuel filler cap	⇐	Front of vehicle

Removal and Installation

INFOID:0000000001703102

REMOVAL

WARNING:

Be sure to read “General Precautions” when working on the fuel system. Refer to FL-4, "General Precaution" .

1. Drain fuel from fuel tank if necessary. Refer to FL-5, "Removal and Installation" .
   CAUTION:
   - **Because fuel tank becomes unstable when installing/removing, fuel should be drained if the level exceeds specification FL-5, "Removal and Installation" .**
   - **Situate vehicle on a flat and solid surface.**
2. Open fuel door and unscrew the fuel filler cap to release the pressure inside the fuel tank.
3. Release the fuel pressure from the fuel lines. Refer to EC-78, "Fuel Pressure Check" .
4. Remove rear seat bottom. Refer to SE-14 .
5. Turn the three retainers 90° in a clockwise direction and remove the fuel pump inspection hole cover.

Disconnect electrical connector (A) and fuel feed hose quick connector (B).
- Fuel feed hose (1)
- ⇐ : Vehicle front

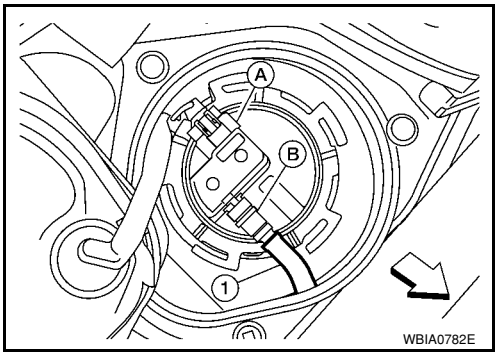

- Disconnect the quick connector using the following procedure.

- Hold the sides of the connector, push in tabs and pull out the tube.
- If quick connector and tube on fuel pump assembly are stuck, push and pull several times until they move. Disconnect them by pulling.

CAUTION:
- **The tube can be removed when the tabs are completely depressed. Do not twist it more than necessary.**
- **Do not use any tools to remove the quick connector.**
- **Keep resin tube away from heat. Be especially careful when welding near the resin tube.**
- **Prevent acid liquid such as battery electrolyte, from getting on resin tube.**
- **Do not bend or twist resin tube during installation and removal.**
- **To keep the connecting portion clean, free of foreign materials and to avoid damage, cover them completely with plastic bags or something similar.**
- **Do not insert plug to prevent damage to O-ring in quick connector.**

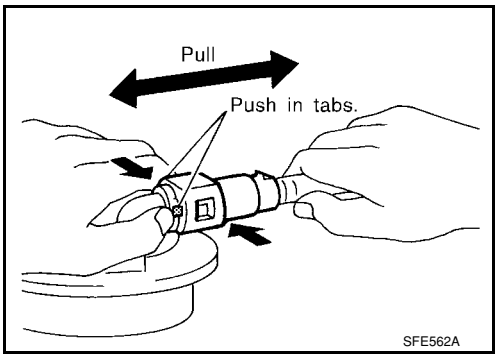

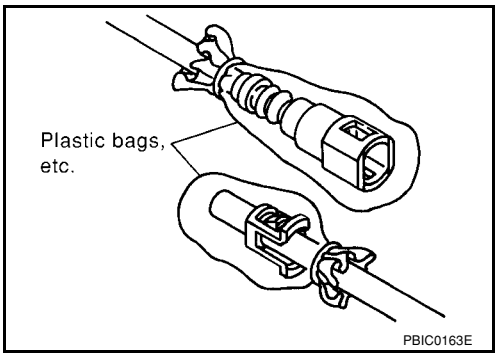

6. Remove center exhaust tube. Refer to EX-4 .
7. Remove exhaust heat shields.
8. Disconnect parking brake cables (1) from the lower surface of fuel tank and axle and position the parking brake cables (1) out of the way.

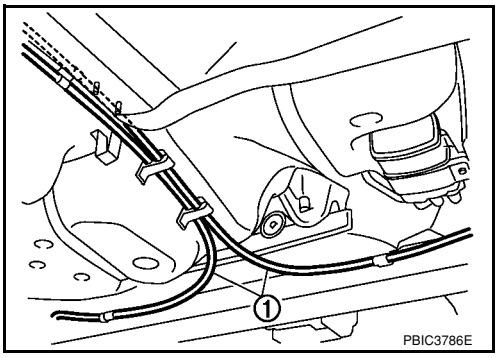

9. Remove brake tube protector (1) from rear axle (2).

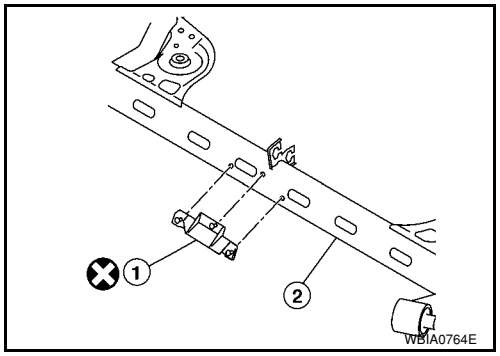

10. Loosen fuel filler hose clamp (3) and remove fuel filler hose (1) from fuel tank (2).
CAUTION:
Do do not remove fuel filler hose (1) from fuel filler tube. Do not allow contact with the suspension during installation. When removing fuel filler hose (1) at the fuel filler tube, mark components for alignment.

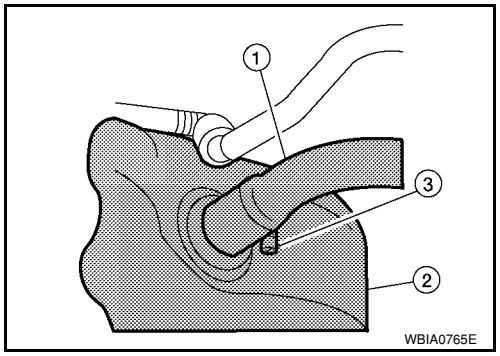

11. Remove vent hose (1) and EVAP hose (2) at rear of fuel tank.
   - Disconnect vent hose and EVAP hose quick connectors using the following procedures.

a. Pinch retaining tabs (A) of vent hose quick connector and remove vent hose (1).

b. Slide sleeve (B) of EVAP hose quick connector and remove EVAP hose (2).
   - If hoses are stuck, push and pull several times until they move freely, and disconnect.

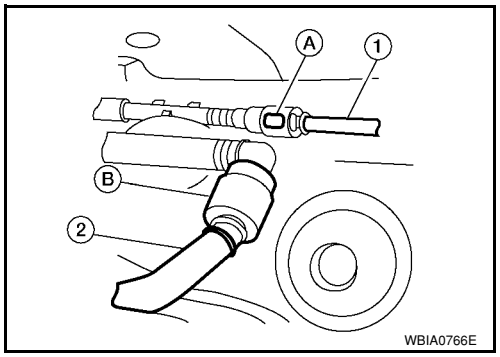

CAUTION:
- **The tube can be removed when the tabs are completely depressed. Do not twist it more than necessary.**
- **Do not use any tools to remove the quick connector.**
- **Keep the resin tube away from heat. Be especially careful when welding near the tube.**
- **Prevent acid liquid such as battery electrolyte, from getting on the resin tube.**
- **Do not bend or twist the tube during installation and removal.**
- **Do not insert plug that may cause damage to O-ring in quick connector.**
- **To keep the connecting portion clean and to avoid damage and foreign materials, cover them completely with plastic bags or something similar.**

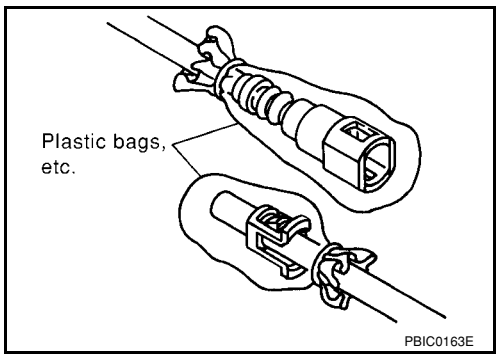

12. Support center of fuel tank (1) with transmission jack (A).
    CAUTION:
    Securely support the fuel tank with a suitable tool (B).
13. Remove fuel tank bands (RH and LH).
14. Lower transmission jack carefully to remove fuel tank while supporting it by hand.
    CAUTION:
    Fuel tank may be in an unstable position because of the shape of fuel tank bottom. Be sure to support tank securely.

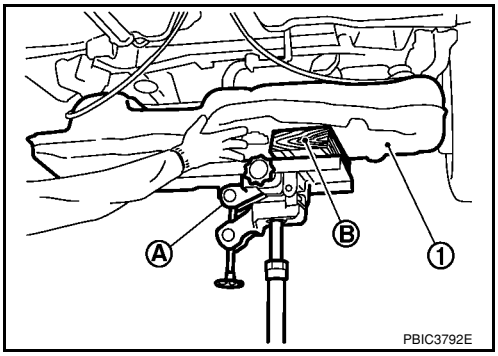

INSTALLATION

Installation is in the reverse order of removal.

EVAP Canister

1. Check the connection for damage or any foreign materials.
2. Align the connector with the tube, then insert the connector straight into the tube until a “click” sound is heard.
3. After connecting, make sure that the connection is secure.
   - Pull the tube and the connector to make sure they are securely connected.

Fuel Tank Bands

Install the fuel tank bands in the proper position by referring to the identification stamp mark “R” and “L” on the end

1. While supporting the fuel tank, install bolts 1, 3 and 4 to support the tank, but do not fully tighten.
   - ⇐ : Front
2. Install bolt 2 while positioning the fuel tank toward the front of the vehicle. Tighten bolt 2 to specified torque.
3. Tighten bolts 1, 3 and 4 to specified torque.

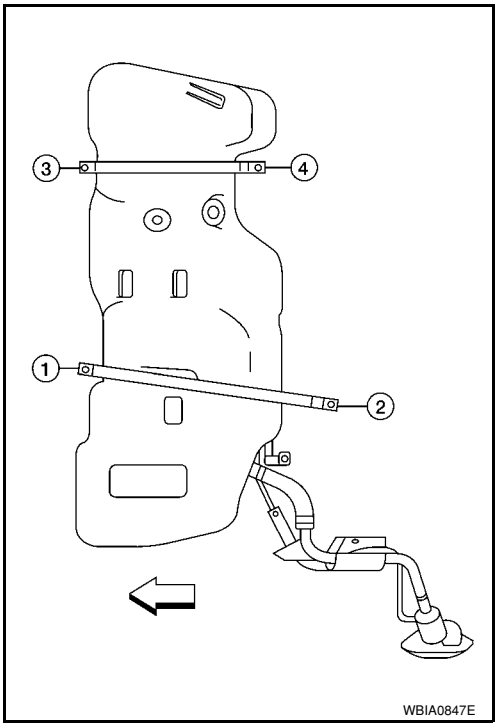

Fuel Filler Hose

- Insert fuel filler hose to the length below.

Fuel filler install length : 35mm (1.38 in)

- Be sure hose clamp is not placed on swelled area of fuel filler tube.

EVAP Hose

1. Check connections for damage or foreign material.
2. Align the matching quick connector (A) with the center of EVAP hose (1), and insert quick connector (A) straight until it clicks.
3. After connecting, pull on quick connector (A) and EVAP hose (1) by hand. Make sure connections are secure.

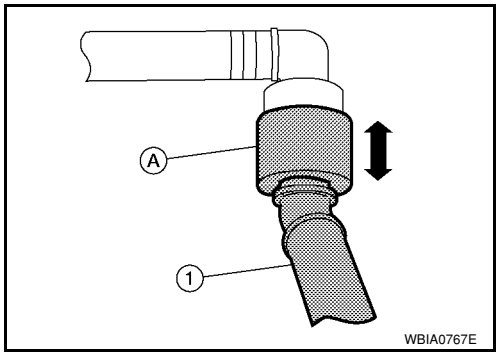

INSPECTION AFTER INSTALLATION

Use the following procedure to check for fuel leaks.

1. Turn ignition switch “ON” (without starting the engine), to check the connections for fuel leaks with the electric fuel pump applying pressure to the fuel piping.
2. Start the engine and let it idle to check that there are no fuel leaks at the fuel system connections.

SERVICE DATA AND SPECIFICATIONS (SDS)

Standard and Limit

INFOID:0000000001703103

FUEL TANK

Unit: ℓ (US gal, Imp gal)

Fuel tank capacity	50.0 (13 1/4, 11)
Fuel recommendation	Refer to MA-10

SECTION FSU
FRONT SUSPENSION

CONTENTS

SERVICE INFORMATION 2

PRECAUTIONS 2
Precaution for Supplemental Restraint System (SRS) "AIR BAG" and "SEAT BELT PRE-TENSIONER" 2
Precaution for Procedure without Cowl Top Cover..... 2
Cautions 2

PREPARATION 3
Special Service Tool 3
Commercial Service Tool 4

NOISE, VIBRATION AND HARSHNESS (NVH) TROUBLESHOOTING 5
NVH Troubleshooting Chart 5

FRONT SUSPENSION ASSEMBLY 6
On-Vehicle Inspection and Service 6
Wheel Alignment Inspection 6
Component 9
Removal and Installation 10

COIL SPRING AND STRUT 11
Removal and Installation 11
Disassembly and Assembly 11

TRANSVERSE LINK 14
Removal and Installation 14

STABILIZER BAR 15
Removal and Installation 15

SERVICE DATA AND SPECIFICATIONS (SDS) 16
Wheel Alignment (Unladen*) 16
Ball Joint 16
Wheelarch Height (Unladen*) 17

SERVICE INFORMATION

PRECAUTIONS

Precaution for Supplemental Restraint System (SRS) "AIR BAG" and "SEAT BELT PRE-TENSIONER"

INFOID:0000000001703715

The Supplemental Restraint System such as “AIR BAG” and “SEAT BELT PRE-TENSIONER”, used along with a front seat belt, helps to reduce the risk or severity of injury to the driver and front passenger for certain types of collision. This system includes seat belt switch inputs and dual stage front air bag modules. The SRS system uses the seat belt switches to determine the front air bag deployment, and may only deploy one front air bag, depending on the severity of a collision and whether the front occupants are belted or unbelted.
Information necessary to service the system safely is included in the SRS and SB section of this Service Manual.

WARNING:

- **To avoid rendering the SRS inoperative, which could increase the risk of personal injury or death in the event of a collision which would result in air bag inflation, all maintenance must be performed by an authorized NISSAN/INFINITI dealer.**
- **Improper maintenance, including incorrect removal and installation of the SRS, can lead to personal injury caused by unintentional activation of the system. For removal of Spiral Cable and Air Bag Module, see the SRS section.**
- **Do not use electrical test equipment on any circuit related to the SRS unless instructed to in this Service Manual. SRS wiring harnesses can be identified by yellow and/or orange harnesses or harness connectors.**

Precaution for Procedure without Cowl Top Cover

INFOID:0000000001703716

When performing the procedure after removing cowl top cover, cover the lower end of windshield.

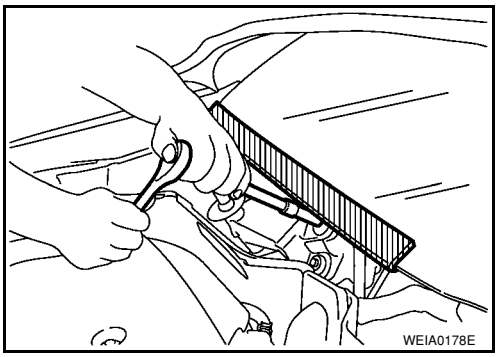

Cautions

INFOID:0000000001703717

- When installing rubber bushings, the final tightening must be carried out under unladen conditions with tires on ground. Oil might shorten the life of rubber bushings. Be sure to wipe off any spilled oil.
- Unladen conditions mean that fuel, engine coolant and lubricant are full. Spare tire, jack, hand tools and mats are in designated positions.
- After servicing suspension parts, be sure to check wheel alignment.
- Self-lock nuts are not reusable. Always use new ones when installing.

PREPARATION

Special Service Tool

INFOID:0000000001703718

The actual shapes of Kent-Moore tools may differ from those of special tools illustrated here.

Tool number (Kent-Moore No.) Tool name		Description
KV991040S0 (—) CCK gauge attachment 1. Plate 2. Guide bolt 3. Nut 4. Spring 5. Center plate 6. KV99104020 Adapter A a: 72 mm (2.83 in) dia. 7. KV99104030 Adapter B b: 65 mm (2.56 in) dia. 8. KV99104040 Adapter C c: 57 mm (2.24 in) dia. 9. KV99104050 Adapter D d: 53.4 mm (2.102 in) dia.	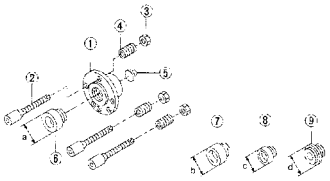	Measuring wheel alignment
ST35652000 (—) Strut attachment	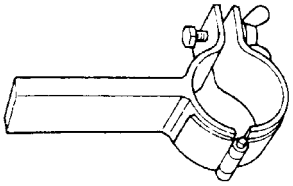	Disassembling and assembling strut
ST3127S000 (J-25742-1) Preload Gauge 1. GG91030000 (J-25765) Torque wrench 2. HT62940000 (—) Socket adapter (1/2″) 3. HT62900000 (—) Socket adapter (3/8″)	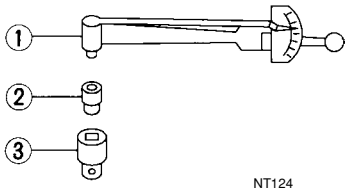	Measuring rotating torque of ball joint
HT72520000 (J-25730-A) Ball joint remover	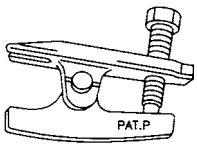	Removing tie-rod outer end and lower ball joint

Commercial Service Tool

INFOID:0000000001703719

Tool name	Description
Spring compressor 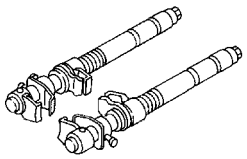 S-NT717	Removing and installing coil spring
Spring gauge 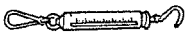 LST025	Inspecting tranverse link ball joint
Power tool 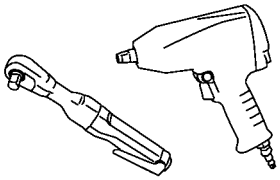 PBIC0190E	• Removing wheel nuts • Removing front suspension component parts

NOISE, VIBRATION AND HARSHNESS (NVH) TROUBLESHOOTING

NVH Troubleshooting Chart

INFOID:0000000001703720

Use chart below to help you find the cause of the symptom. If necessary, repair or replace these parts.

Reference page		FSU-9	FSU-11	—	—	—	FSU-9	RSU-2	FSU-15	FAX-4, "NVH Troubleshooting Chart"	"NVH Troubleshooting Chart"	WT-4, "NVH Troubleshooting Chart"	WT-4, "NVH Troubleshooting Chart"	FAX-4, "NVH Troubleshooting Chart"	BR-4, "NVH Troubleshooting Chart"	PS-5, "NVH Troubleshooting Chart"
Possible cause and SUSPECTED PARTS		Improper installation, looseness	Strut deformation, damage or deflection	Bushing or mounting deterioration	Parts interference	Spring fatigue	Suspension looseness	Incorrect wheel alignment	Stabilizer bar fatigue	FRONT AXLE	FRONT SUSPENSION	TIRES	ROAD WHEEL	DRIVE SHAFT	BRAKES	STEERING
Symptom	Noise	×	×	×	×	×	×			×	×	×	×	×	×	×
	Shake	×	×	×	×		×			×	×	×	×	×	×	×
	Vibration	×	×	×	×	×				×	×	×		×		×
	Shimmy	×	×	×	×			×		×	×	×	×		×	×
	Shudder	×	×	×						×	×	×	×		×	×
	Poor quality ride or handling	×	×	×	×	×		×	×	×	×	×	×			

×: Applicable

FRONT SUSPENSION ASSEMBLY

On-Vehicle Inspection and Service

INFOID:0000000001703721

Make sure the mounting conditions (looseness, back lash) of each component and component conditions (wear, damage) are normal.

INSPECTION OF LOWER BALL JOINT END PLAY

1. Set front wheels in a straight-ahead position. Do not depress brake pedal.
2. Place an iron bar or similar tool between transverse link and steering knuckle.
3. Measure axial end play by prying it up and down.

Axial end play : 0 mm (0 in)

CAUTION:
Be careful not to damage ball joint boot. Do not damage the installation position by applying excessive force.

STRUT INSPECTION

Check for oil leakage, damage and replace as necessary.

Wheel Alignment Inspection

INFOID:0000000001703722

PRELIMINARY INSPECTION

WARNING:
Always adjust the alignment with the vehicle on a flat surface.
NOTE:
If alignment is out of specification, inspect and replace any damaged or worn rear suspension parts before making any adjustments.

1. Check and adjust the wheel alignment with the vehicle under unladen conditions. “Unladen conditions” means that the fuel, coolant, and lubricant are full; and that the spare tire, jack, hand tools and mats are in their designated positions.
2. Check the tires for incorrect air pressure and excessive wear.
3. Check the wheels for run out and damage. Refer to WT-5, "Inspection" .
4. Check the wheel bearing axial end play. Refer to FAX-5, "On-Vehicle Inspection and Service" .
5. Check the shock absorbers for leaks or damage.
6. Check each mounting point of the suspension components for any excessive looseness or damage.
7. Check each link, arm, and the suspension member for any damage.
8. Check the vehicle height. Refer to FSU-17, "Wheelarch Height (Unladen*)" .

GENERAL INFORMATION AND RECOMMENDATIONS

1. A Four-Wheel Thrust Alignment should be performed.
   - This type of alignment is recommended for any NISSAN vehicle.
   - The four-wheel “thrust” process helps ensure that the vehicle is properly aligned and the steering wheel is centered.
   - The alignment machine itself should be capable of accepting any NISSAN vehicle.
   - The alignment machine should be checked to ensure that it is level.
2. Make sure the alignment machine is properly calibrated.
   - Your alignment machine should be regularly calibrated in order to give correct information.
   - Check with the manufacturer of your specific alignment machine for their recommended Service/Calibration Schedule.

THE ALIGNMENT PROCESS

IMPORTANT: Use only the alignment specifications listed in this Service Manual. Refer to FSU-16, "Wheel Alignment (Unladen*)" .

1. When displaying the alignment settings, many alignment machines use “indicators”: (Green/red, plus or minus, Go/No Go). **Do NOT use these indicators.**
   - The alignment specifications programmed into your alignment machine that operate these indicators may not be correct.

- This may result in an ERROR.

2. Some newer alignment machines are equipped with an optional “Rolling Compensation” method to “compensate” the sensors (alignment targets or head units). **Do NOT use this “Rolling Compensation” method.**
   - Use the “Jacking Compensation” method. After installing the alignment targets or head units, raise the vehicle and rotate the wheels 1/2 turn both ways.
   - See Instructions in the alignment machine you are using for more information.

CAMBER, CASTER AND KINGPIN INCLINATION ANGLES INSPECTION

- Camber, caster, kingpin inclination angles cannot be adjusted.
- Before inspection, mount front wheels onto turning radius gauge. Mount rear wheels onto a stand that has same height so vehicle will remain horizontal.

Using a CCK Gauge

Install the CCK gauge attachment [SST: KV991040S0] with the following procedure on wheel, then measure wheel alignment.

Tool number : KV991040S0 (—)

1. Remove three wheel nuts, and install the guide bolts to hub bolt.
2. Screw the adapter into the plate until it contacts the plate tightly.
3. Screw the center plate into the plate.
4. Insert the plate assembly on the guide bolt. Put the spring in, and then evenly screw the three guide bolt nuts. When fastening the guide nuts, do not completely compress the spring.

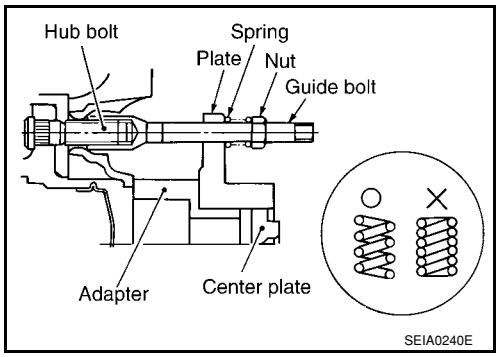

5. Place the dent of alignment gauge onto the projection of the center plate and tightly contact them to measure.

Camber, caster, kingpin inclination angles:

Refer to FSU-16, "Wheel Alignment (Unladen*)" .

CAUTION:
- **If camber, caster, or kingpin inclination angle is outside the specification, check front suspension parts for wear and damage. Replace suspect parts if a malfunction is detected.**
- **Kingpin inclination angle is reference value, no inspection is required.**

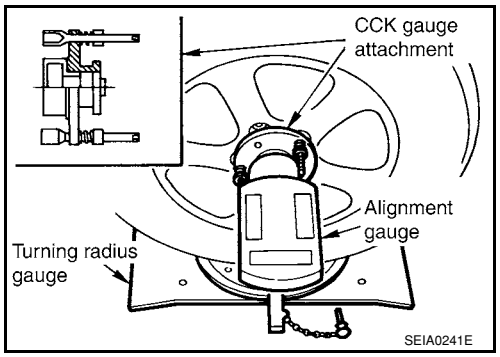

TOE-IN INSPECTION

Measure toe-in using the following procedure.

WARNING:
- **Always perform the following procedure on a flat surface.**
- **Make sure that no person is in front of vehicle before pushing it.**

1. Bounce the front of vehicle up and down to stabilize the vehicle height (posture).
2. Push vehicle straight ahead about 5 m (16 ft).

3. Put a mark on base line of the tread (rear side) of both tires at the same height of hub center. These are measuring points.

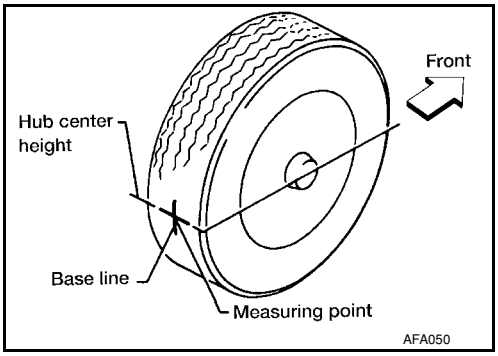

4. Measure distance “A” (rear side).
5. Push vehicle slowly ahead to rotate wheels 180 degrees (1/2 turn).
   CAUTION:
   If wheels have rotated more than 180 degrees (1/2 turn), try the above procedure again from the beginning. Never push vehicle backward.
6. Measure distance “B” (front side).

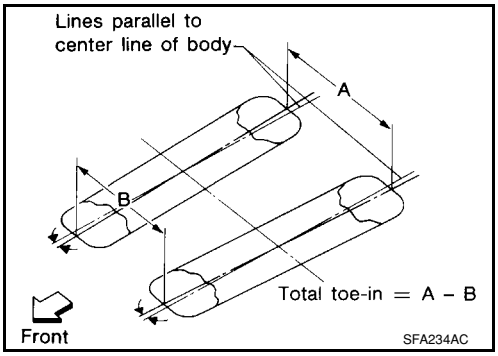

7. Use the formula below to calculate total toe-in.

   Total toe-in = A - B

   For total toe-in specification, refer to FSU-16, "Wheel Alignment (Unladen*)" .

   - If the total toe-in is outside the specification, adjust toe-in by varying the length of between steering outer socket and inner socket.

Component

INFOID:0000000001703723

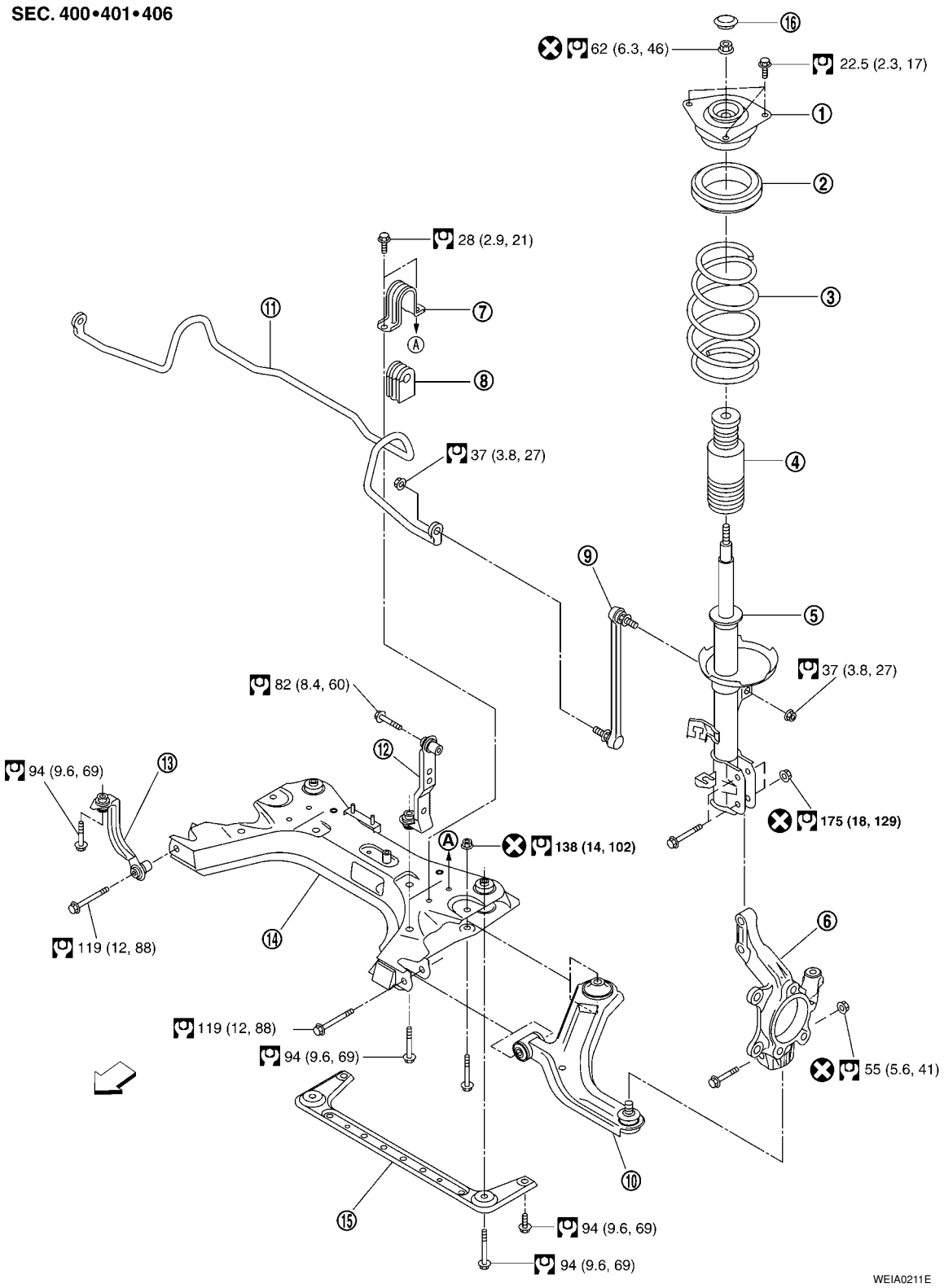

1. Strut mounting insulator	2. Strut mounting bearing	3. Coil spring
4. Bound bumper	5. Strut	6. Steering knuckle
7. Stabilizer clamp	8. Stabilizer bushing	9. Stabilizer connecting rod
10. Transverse link	11. Stabilizer bar	12. Upper link (left)

13. Upper link (right)
14. Front suspension member
15. Member stay
16. Cap

⇐: Front

Refer to GI-7 for the symbols.

Removal and Installation

INFOID:0000000001703724

REMOVAL

1. Separate intermediate shaft from steering gear pinion shaft. Refer to PS-9, "Removal and Installation".
2. Remove front tires from vehicle using a power tool.
3. Remove wheel sensor from steering knuckle. Refer to BRC-32.
   CAUTION:
   Do not pull on wheel sensor harness.
4. Remove the nut on the upper side of stabilizer connecting rod (1) with a power tool, and then remove stabilizer connecting rod (1) from strut assembly.

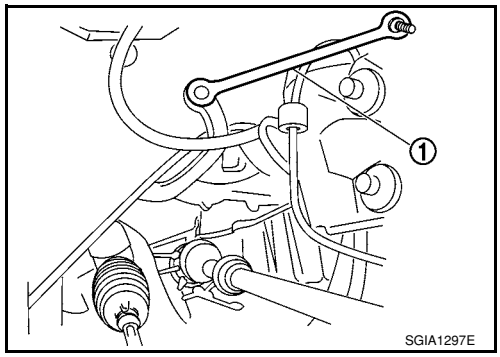

5. Loosen steering outer socket (1) nut.
6. Remove steering outer socket (1) from steering knuckle (2) so as not to damage ball joint boot (3) using Tool.
   CAUTION:
   Temporarily tighten the nut to prevent damage to threads and to prevent the Tool from suddenly coming off.

   Tool number : HT72520000 (J-25730-A)

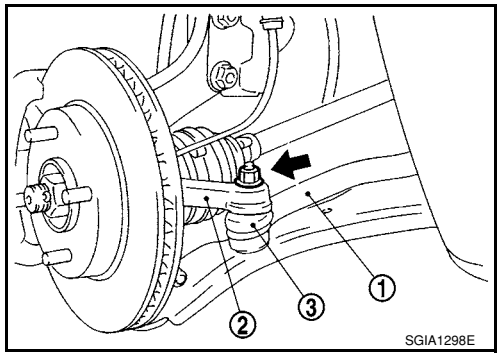

7. Remove rear torque rod. Refer to EM-72, "Component" .
8. Remove transverse link ball joint nut and bolt. Then, remove transverse link from steering knuckle.
9. Set jack under front suspension member.
10. Remove upper side bolts of upper link.
11. Remove the bolts of member stay, and then remove member stay from vehicle.
12. Gradually lower a jack to remove front suspension assembly.

INSTALLATION

Installation is in the reverse order of removal.

- For tightening torque, refer to FSU-9, "Component" .
- Perform final tightening of each of parts (rubber bushing), under unladen conditions, which were removed when removing front suspension assembly. Check wheel alignment. Refer to RSU-2, "Precaution for Supplemental Restraint System (SRS) "AIR BAG" and "SEAT BELT PRE-TENSIONER"" .
- Check wheel sensor harness for proper connection. Refer to BRC-32 .

COIL SPRING AND STRUT

Removal and Installation

INFOID:0000000001703725

REMOVAL

1. Remove cowl top panel. Refer to EI-21 .
2. Remove front tires using power tool.
3. Remove harness of wheel sensor from strut assembly. Refer to BRC-32 .
   CAUTION:
   Do not pull on wheel sensor harness.
4. Remove brake hose lock plate. Refer to BR-10 .
5. Remove the nut on the upper side of stabilizer connecting rod using power tool, and then remove stabilizer connecting rod from strut assembly.
6. Remove nuts and bolts, and then remove steering knuckle from strut assembly. Refer to FSU-9, "Component" .
7. Remove the strut mounting insulator bolts, then remove strut assembly.

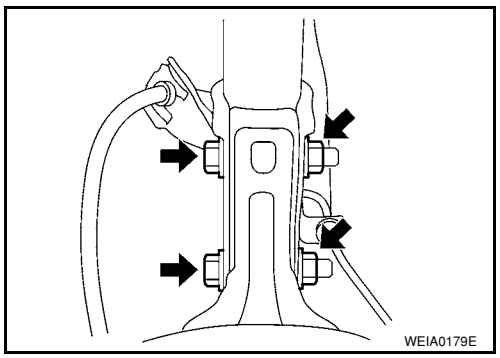

INSTALLATION

Installation is in the reverse order of removal.

- For tightening torque, refer to FSU-9, "Component" .
- Perform final tightening of bolts and nuts at the strut assembly lower side (rubber bushing) under unladen conditions with tires on level ground. Check wheel alignment. Refer to RSU-2, "Precaution for Supplemental Restraint System (SRS) "AIR BAG" and "SEAT BELT PRE-TENSIONER"" .
- Check wheel sensor harness for proper connection. Refer to BRC-32 .
- Attach strut mounting insulator as shown.

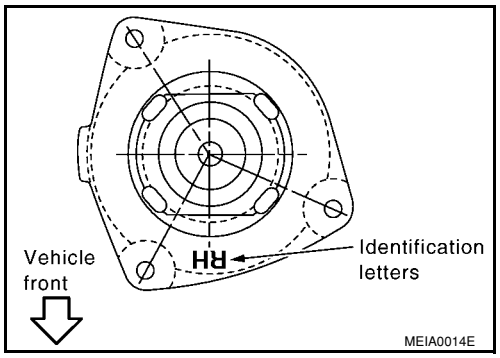

Disassembly and Assembly

INFOID:0000000001703726

DISASSEMBLY

CAUTION:
Do not damage strut piston rod when removing components from strut assembly.

1. Install Tool (A) to strut and secure it in a vise.

   Tool number : ST35652000 (—)

   CAUTION:
   When installing the strut attachment to strut, wrap a shop cloth around strut to protect it from damage.

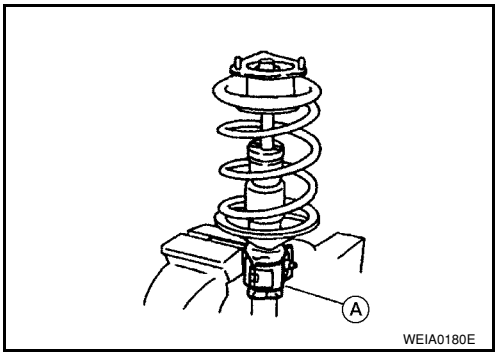

2. Using a spring compressor (commercial service tool), compress coil spring between strut mounting bearing and spring lower seat (on strut) until coil spring is free.
   CAUTION:
   Be sure the spring compressor is securely attached to the coil spring before compressing coil spring.
3. Make sure coil spring with spring compressor between strut mounting bearing and spring lower seat (strut) is free. Then remove piston rod lock nut while securing the piston rod tip so that piston rod does not turn.
4. Remove strut mounting insulator, strut mounting bearing, and bound bumper from strut.

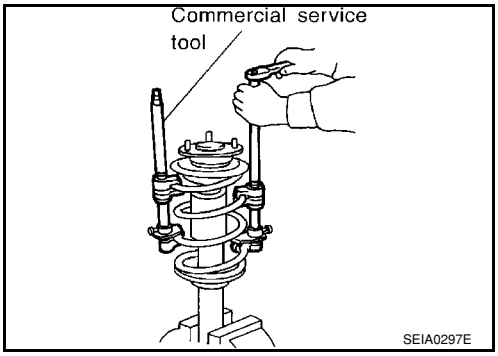

5. Remove coil spring with spring compressor, and then gradually release a spring compressor.
   CAUTION:
   Loosen while making sure coil spring attachment position does not move.
6. Remove the strut attachment from strut.

INSPECTION AFTER DISASSEMBLY

Strut Inspection

Check the following:
- Strut for deformation, cracks or damage, and replace it if necessary.
- Piston rod for damage, uneven wear or distortion, and replace it if necessary.
- For oil leakage, and replace it if necessary.

Strut Mounting Insulator and Rubber Parts Inspection

Check strut mounting insulator for cracks and rubber parts for wear. Replace it if malfunction is detected.

Coil Spring Inspection

Check coil spring for cracks, wear or damage, and replace it if necessary.

ASSEMBLY

CAUTION:
Do not damage strut piston rod when installing components to strut.

1. Install the Tool (A) to strut and secure it in a vise.

   Tool number : ST35652000 (—)

   CAUTION:
   When installing the strut attachment to strut, wrap a shop cloth around strut to protect it from damage.

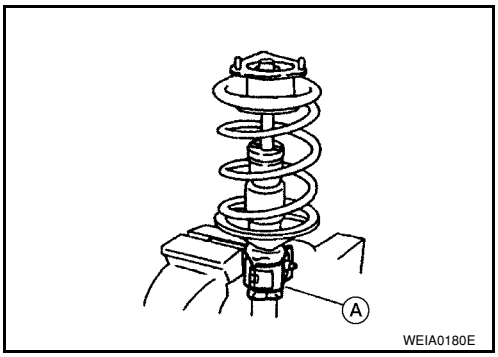

2. Compress coil spring using a spring compressor (commercial service tool), and install it onto strut.

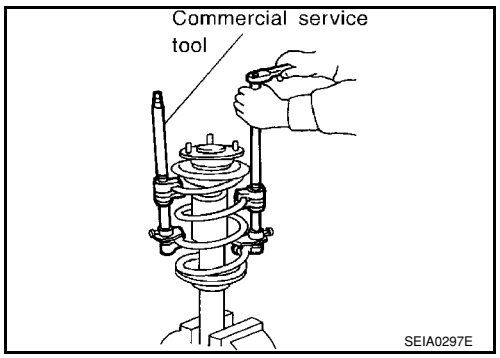

CAUTION:
- **Face tube side of coil spring downward. Align the lower end to spring lower seat as shown.**
- **Be sure spring compressor is securely attached to coil spring. Compress coil spring.**

3. Apply soapy water to bound bumper. Insert bound bumper into strut mounting insulator.
CAUTION:
Do not use machine oil.

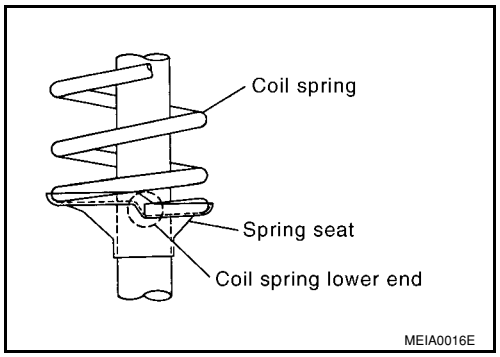

4. Attach strut mounting bearing and strut mounting insulator.
   - Installation position of strut mounting insulator as shown.
5. Secure piston rod tip so that piston rod does not turn, then tighten piston rod lock nut to specified torque.
6. Gradually release a spring compressor, and remove coil spring.
CAUTION:
Loosen while making sure coil spring attachment position does not move.
7. Remove the strut attachment from strut.

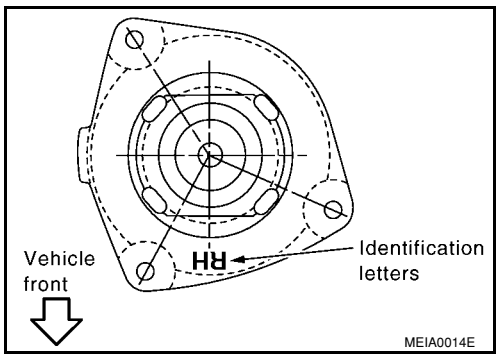

TRANSVERSE LINK

Removal and Installation

INFOID:0000000001703727

REMOVAL

1. Remove front tires using power tool.
2. Remove transverse link ball joint nut and bolt. Then, remove transverse link from steering knuckle.
3. Remove transverse link nuts and bolts, then remove transverse link from front suspension member.
   NOTE:
   When removing LH transverse link it may be necessay to lower the suspension member in order to remove bolts to avoid contact with the transaxle.

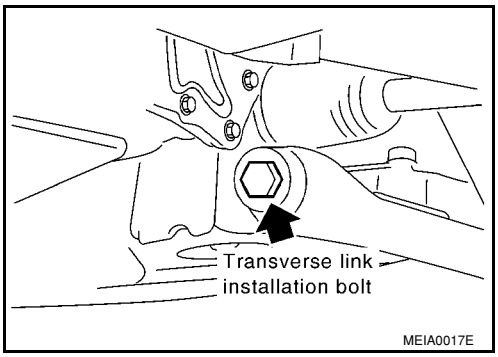

a. Set jack under front suspension member.
b. Loosen RH upper link bolts, LH upper link bolt (front suspension member side), front suspension member bolts (left/right). Lower the front suspension member in order to remove transverse link bolts.
4. Remove transverse link.

INSPECTION AFTER REMOVAL

Visual Inspection
Check the following:
- Transverse link and bushing for deformation, cracks or damage. Replace it if necessary.
- Ball joint boot for cracks or other damage, and also for grease leakage. Replace it if necessary.

Ball Joint Inspection
Manually move ball stud to confirm it moves smoothly with no binding.

Swing Torque Inspection
NOTE:
Before measurement, move ball stud at least ten times by hand to check for smooth movement.
- Hook a spring balance at the cutout on ball stud. Confirm spring balance measurement value is within specifications when ball stud begins moving.

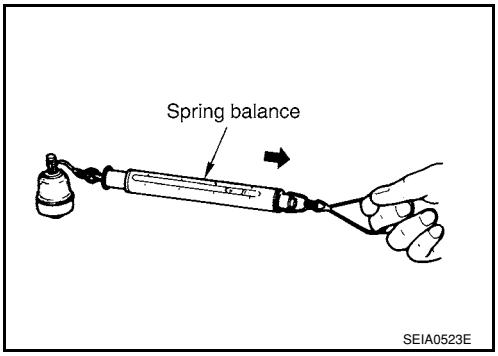

Swing torque
: 0.5 - 4.9 N·m (0.06 - 0.49 kg-m, 5 - 43 in-lb)
Spring balance measurement
: 15.4 - 150.8 N (1.6 - 15.4 kg-f, 3.5 - 40 lb-f)

- If it is outside the specified range, replace transverse link assembly.

Axial End Play Inspection
- Move tip of ball stud in axial direction to check for looseness.

Axial end play : 0 mm (0 in)

- If it is outside the specified range, replace transverse link assembly.

INSTALLATION

Installation is in the reverse order of removal.
- For tightening torque, refer to FSU-9, "Component" .
- Perform final tightening of bolts and at the front suspension member installation position (rubber bushing) under unladen conditions with tires on level ground. Check wheel alignment. Refer to RSU-2, "Precaution for Supplemental Restraint System (SRS) "AIR BAG" and "SEAT BELT PRE-TENSIONER"" .

STABILIZER BAR

Removal and Installation

INFOID:0000000001703728

REMOVAL

1. Separate intermediate shaft from steering gear pinion shaft. Refer to PS-9, "Removal and Installation" .
2. Remove front tires using power tool.
3. Remove the nut on the lower side of stabilizer connecting rod using power tool, and then remove stabilizer connecting rod from stabilizer bar.
4. If necessary remove stabilize connecting rod upper nut using power tool. Separate stabilizer connecting rod and strut.
5. Loose steering outer socket (1) nut.
6. Remove steering outer socket (1) from steering knuckle (2) so as not to damage ball joint boot (3) using the ball joint remover or suitable tool.
   CAUTION:
   Temporarily tighten the nut to prevent damage to threads and to prevent the ball joint remover (suitable tool) from suddenly coming off.

   Tool number : HT72520000 (J-25730-A)

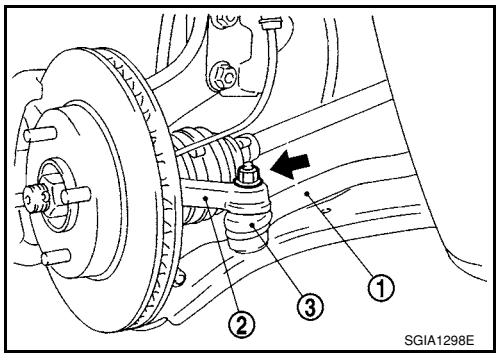

7. Remove rear torque rod. Refer to EM-72, "Component" .
8. Set jack under front suspension member.
9. Remove the bolts of member stay, and then remove member stay.
10. Gradually lower front suspension member in order to remove stabilizer bolts.
    CAUTION:
    Be careful not to lower it too far. (Do not over load the links.)

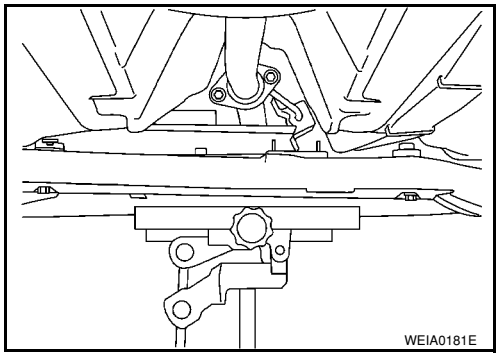

11. Remove the bolts of stabilizer clamp, and then remove stabilizer clamp and stabilizer bushing.
12. Remove stabilizer bar.

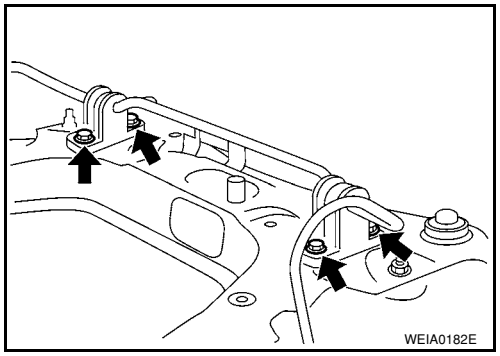

INSPECTION AFTER REMOVAL

Check stabilizer bar, stabilizer connecting rod, stabilizer bushing, and stabilizer clamp for deformation, cracks, and damage. Replace it if necessary.

INSTALLATION

Installation is in the reverse order of removal.

- For tightening torques, refer to FSU-9, "Component" .

SERVICE DATA AND SPECIFICATIONS (SDS)

Wheel Alignment (Unladen*)

INFOID:0000000001703729

Camber Degree minute (Decimal degree)	RH	Minimum	- 1° 05′ (- 1.08°)
		Nominal	- 0° 20′ (- 0.33°)
		Maximum	0° 25′ (0.42°)
	LH	Minimum	- 0° 55′ (- 0.92°)
		Nominal	- 0° 10′ (- 0.17°)
		Maximum	0° 35′ (0.58°)
	Left and right difference (RH - LH)	Minimum	-0° 45′ (-0.75°) or less
		Nominal	-0° 12′ (-0.20°) or less
		Maximum	0° 21′ (0.35°) or less
Caster Degree minute (Decimal degree)	RH	Minimum	4° 05′ (4.08°)
		Nominal	4° 50′ (4.83°)
		Maximum	5° 35′ (5.58°)
	LH	Minimum	3° 55′ (3.92°)
		Nominal	4° 40′ (4.67°)
		Maximum	5° 25′ (5.42°)
	Left and right difference (RH - LH)	Minimum	-0° 21′ (-0.35°) or less
		Nominal	0° 12′ (0.20°) or less
		Maximum	0° 45′ (0.75°) or less
Kingpin inclination Degree minute (Decimal degree)		Minimum	9° 10′ (9.17°)
		Nominal	9° 55′ (9.92°)
		Maximum	10° 40′ (10.67°)

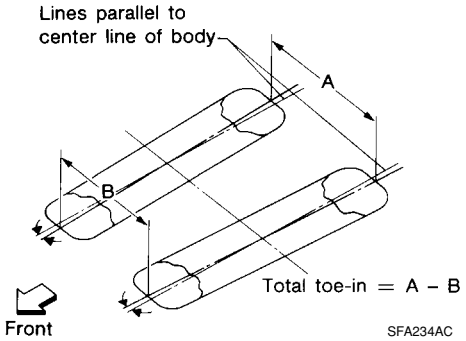

Total toe-in	Distance (A - B)	Minimum	0 mm (0 in)
		Nominal	1 mm (0.04 in)
		Maximum	2 mm (0.08 in)
	Angle (left or right, each side) Degree minute (Decimal degree)	Minimum	0° 0′ (0°)
		Nominal	0° 3′ (0.05°)
		Maximum	0° 6′ (0.10°)

*: Fuel, engine coolant and engine oil full. Spare tire, jack, hand tools and mats in designated positions.

Ball Joint

INFOID:0000000001703730

Swing torque	0.5 - 4.9 N·m (0.06 - 0.49 kg-m, 5 - 43 in-lb)

Measurement on spring balance	15.4 - 150.8 N (1.6 - 15.4 kg-f, 3.5 - 40 lb-f)
Axial end play	0 mm (0 in)

Wheelarch Height (Unladen*)

INFOID:0000000001703731

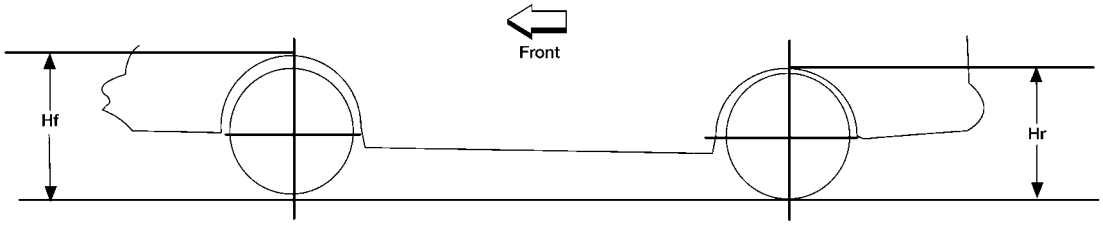

LEIA0085E

Tire size	P185/65R15
Front (Hf)	686 mm (27.01 in)
Rear (Hr)	684 mm (26.93 in)

*: Fuel, engine coolant and engine oil full. Spare tire, jack, hand tools and mats in designated positions.

Edition: May 2007
Revision: May 2007
Publication No. SM8E-1C11U0

NISSAN VERSA

MODEL C11 SERIES

QUICK REFERENCE INDEX

A	GENERAL INFORMATION	GI	General Information
B	ENGINE	EM	Engine Mechanical
		LU	Engine Lubrication System
		CO	Engine Cooling System
		EC	Engine Control System
		FL	Fuel System
		EX	Exhaust System
		ACC	Accelerator Control System
C	TRANSMISSION/ TRANSAXLE	CL	Clutch System
		MT	Manual Transaxle
		AT	Automatic Transaxle
		CVT	CVT
D	DRIVELINE/AXLE	FAX	Front Axle
		RAX	Rear Axle
E	SUSPENSION	FSU	Front Suspension
		RSU	Rear Suspension
		WT	Road Wheels & Tires
F	BRAKES	BR	Brake System
		PB	Parking Brake System
		BRC	Brake Control System
G	STEERING	PS	Power Steering System
		STC	Steering Control System
H	RESTRAINTS	SB	Seat Belts
		SRS	Supplemental Restraint System (SRS)
I	BODY	BL	Body, Lock & Security System
		GW	Glasses, Window System & Mirrors
		RF	Roof
		EI	Exterior & Interior
		IP	Instrument Panel
		SE	Seat
J	AIR CONDITIONER	MTC	Manual Air Conditioner
K	ELECTRICAL	SC	Starting & Charging System
		LT	Lighting System
		DI	Driver Information System
		WW	Wiper, Washer & Horn
		BCS	Body Control System
		LAN	LAN System
		AV	Audio Visual, Navigation & Telephone System
		ACS	Auto Cruise Control System
		PG	Power Supply, Ground & Circuit Elements
L	MAINTENANCE	MA	Maintenance

© 2007 NISSAN NORTH AMERICA, INC.
All rights reserved. No part of this Service Manual may be reproduced or stored in a retrieval system, or transmitted in any form, or by any means, electronic, mechanical, photo-copying, recording or otherwise, without the prior written permission of Nissan North America Inc.

FOREWORD

This manual contains maintenance and repair procedures for the 2008 NISSAN VERSA.

In order to assure your safety and the efficient functioning of the vehicle, this manual should be read thoroughly. It is especially important that the PRECAUTIONS in the GI section be completely understood before starting any repair task.

All information in this manual is based on the latest product information at the time of publication. The right is reserved to make changes in specifications and methods at any time without notice.

IMPORTANT SAFETY NOTICE

The proper performance of service is essential for both the safety of the technician and the efficient functioning of the vehicle.
The service methods in this Service Manual are described in such a manner that the service may be performed safely and accurately.
Service varies with the procedures used, the skills of the technician and the tools and parts available. Accordingly, anyone using service procedures, tools or parts which are not specifically recommended by NISSAN must first be completely satisfied that neither personal safety nor the vehicle's safety will be jeopardized by the service method selected.

NISSAN NORTH AMERICA, INC.
Technical Publications Department

PLEASE HELP MAKE THIS SERVICE MANUAL BETTER!

Your comments are important to NISSAN and will help us to improve our Service Manuals.

Use this form to report any issues or comments you may have regarding our Service Manuals.

Please print this form and type or write your comments below. Mail or fax to:

Nissan North America, Inc.
Technical Service Information
39001 Sunrise Drive, P.O. Box 9200
Farmington Hills, MI USA 48331
FAX: (248) 488-3910

SERVICE MANUAL: Model: _____ **Year:** _____

PUBLICATION NO. (Refer to Quick Reference Index): _____

Please describe any Service Manual issues or problems in detail:

Page number(s) _____ *Note: Please include a copy of each page, marked with your comments.*

_____

_____

_____

_____

_____

_____

_____

Are the trouble diagnosis procedures logical and easy to use? (circle your answer) YES NO

If no, what page number(s)?_____*Note: Please include a copy of each page, marked with your comments.*

Please describe the issue or problem in detail: _____

_____

_____

_____

Is the organization of the manual clear and easy to follow? (circle your answer) YES NO

Please comment: _____

_____

_____

_____

_____

What information should be included in NISSAN Service Manuals to better support you in servicing or repairing customer vehicles?

_____

_____

_____

_____

DATE: _____ YOUR NAME: _____ POSITION: _____

DEALER: _____ DEALER NO.: _____ ADDRESS: _____

CITY:_____ STATE/PROV./COUNTRY: _____ ZIP/POSTAL CODE: _____

QUICK REFERENCE CHART: VERSA

Engine Tune-up Data

INFOID:0000000001903528

GENERAL SPECIFICATIONS

Engine type		MR18DE
Cylinder arrangement		In-line 4
Displacement cm^3 (cu in)		1,797 (109.65)
Bore and stroke mm (in)		84.0 x 81.1 (3.307 x 3.192)
Valve arrangement		DOHC
Firing order		1-3-4-2
Number of piston rings	Compression	2
	Oil	1
Compression ratio		9.9
Compression pressure kPa (bar, kg/cm^2 , psi) / 250 rpm	Standard	1,500 (15.0, 15.3, 217.6)
	Minimum	1,200 (12.0, 12.2, 174)
	Differential limit between cylinders	100 (1.0, 1.0, 15)

SPARK PLUG

Unit: mm (in)

Plug type	Iridium-tipped TYPE
Make	DENSO
Standard type	FXE20HR11
Spark plug gap	Nominal: 1.1 (0.043)

Front Wheel Alignment (Unladen*)

INFOID:0000000001903529

Camber Degree minute (Decimal degree)	RH	Minimum	- 1° 05′ (- 1.08°)
		Nominal	- 0° 20′ (- 0.33°)
		Maximum	0° 25′ (0.42°)
	LH	Minimum	- 0° 55′ (- 0.92°)
		Nominal	- 0° 10′ (- 0.17°)
		Maximum	0° 35′ (0.58°)
	Left and right difference (RH - LH)	Minimum	-0° 45′ (-0.75°) or less
		Nominal	-0° 12′ (-0.20°) or less
		Maximum	0° 21′ (0.35°) or less
Caster Degree minute (Decimal degree)	RH	Minimum	4° 05′ (4.08°)
		Nominal	4° 50′ (4.83°)
		Maximum	5° 35′ (5.58°)
	LH	Minimum	3° 55′ (3.92°)
		Nominal	4° 40′ (4.67°)
		Maximum	5° 25′ (5.42°)
	Left and right difference (RH - LH)	Minimum	-0° 21′ (-0.35°) or less
		Nominal	0° 12′ (0.20°) or less
		Maximum	0° 45′ (0.75°) or less

Kingpin inclination Degree minute (Decimal degree)	Minimum	9° 10′ (9.17°)
	Nominal	9° 55′ (9.92°)
	Maximum	10° 40′ (10.67°)

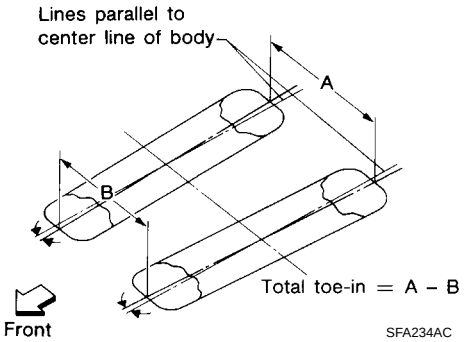

Total toe-in	Distance (A - B)	Minimum	0 mm (0 in)
		Nominal	1 mm (0.04 in)
		Maximum	2 mm (0.08 in)
	Angle (left or right, each side) Degree minute (Decimal degree)	Minimum	0° 0′ (0°)
		Nominal	0° 3′ (0.05°)
		Maximum	0° 6′ (0.10°)

*: Fuel, engine coolant and engine oil full. Spare tire, jack, hand tools and mats in designated positions.

Rear Wheel Alignment (Unladen*)

INFOID:0000000001903531

Camber Degree minute (Decimal degree)		Minimum	– 2° 01′ (– 2.02°)
		Nominal	– 1° 31′ (– 1.52°)
		Maximum	– 1° 01′ (– 1.02°)
Total toe-in	Distance (A - B)	Minimum	1.0 mm (0.039 in)
		Nominal	5.0 mm (0.197 in)
		Maximum	9.0 mm (0.354 in)
	Angle (A - B) Degree minute (Decimal degree)	Minimum	0° 3′ (0.05°)
		Nominal	0° 14′ (0.23°)
		Maximum	0° 24 (0.41°)

*: Fuel, engine coolant and engine oil full. Spare tire, jack, hand tools and mats in designated positions.

Wheelarch Height (Unladen*)

INFOID:0000000001903530

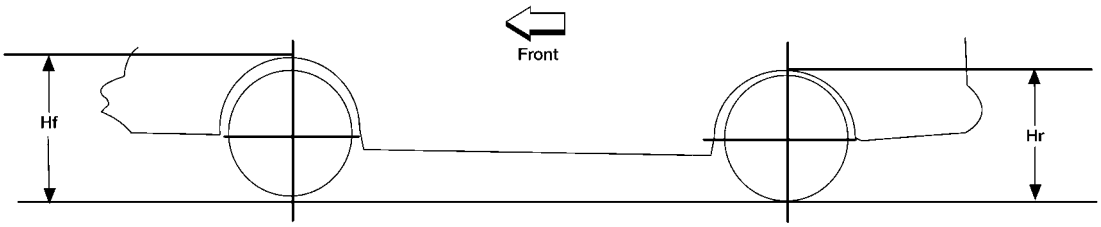

LEIA0085E

Tire size	P185/65R15
Front (Hf)	686 mm (27.01 in)
Rear (Hr)	684 mm (26.93 in)

*: Fuel, engine coolant and engine oil full. Spare tire, jack, hand tools and mats in designated positions.

General Specification

INFOID:0000000001903532

Front brake	Brake model	CLZ25VA
	Cylinder bore diameter	57.2 mm (2.252 in)
	Pad Length × width × thickness	125.6 mm × 46.0 mm × 9.5 mm (4.945 in × 1.811 in × 0.374 in)
	Rotor outer diameter × thickness	280 mm × 24.0 mm (11.02 in × 0.945 in)
Rear brake	Brake model	LT20D
	Cylinder bore diameter	15.87 mm (0.625 in)
	Lining Length × width × thickness	194.1 mm × 30.0 mm × 4.0 mm (7.642 in × 1.181 in × 0.157 in)
	Drum outer diameter	228.6 mm (9.000 in)
Master cylinder	Cylinder bore diameter	22.22 mm (0.875 in)
Control valve	Valve model	Electric brake force distribution
Brake booster	Booster model	C255
	Diaphragm diameter	255 mm (10.04 in)

Brake Pedal

INFOID:0000000001903533

Unit: mm (in)

Brake pedal free height (from dash panel top surface)	A/T, CVT model	172.4 - 182.4 (6.79 - 7.18)
	M/T model	162.3 - 172.3 (6.39 - 6.78)
Brake pedal depressed height [under a force of 490 N (50 kg-f, 110 lb-f) with the engine running]	A/T, CVT model	98 (3.86) or more
	M/T model	90 (3.54) or more
Clearance between brake pedal lever and the threaded end of stop lamp switch		0.74 - 1.96 (0.0291 - 0.0772)
Pedal play		3 - 11 (0.12 - 0.43)

Front Disc Brake

INFOID:0000000001903534

Unit: mm (in)

Brake model		CLZ25VA
Brake pad	Standard thickness (new)	9.5 (0.374)
	Repair limit thickness	2.0 (0.079)
Disc rotor	Standard thickness (new)	24.0 (0.945)
	Repair limit thickness	22.0 (0.866)
	Runout limit	0.04 (0.0016)
	Maximum uneven wear (measured at 8 positions)	0.02 mm (0.0008 in) or less

Rear Drum Brake

INFOID:0000000001903535

Unit: mm (in)

Brake model		LT20D
Brake lining	Standard thickness (new)	4.0 (0.157)
	Repair limit thickness	1.5 (0.059)
Drum	Standard inner diameter (new)	228.6 (9.000)
	Repair limit inner diameter	230.0 (9.055)

Fluids and Lubricants

INFOID:0000000001903536

Description		Capacity (Approximate)		
		Liter	US measure	Imp measure
Fuel		52.0	13 3/4 gal	11 1/2 gal
Engine oil Drain and refill	With oil filter change	3.9	4 1/8 qt	3 3/8 qt
	Without oil filter change	3.7	3 7/8 qt	3 1/4 qt
Dry engine (engine overhaul)		4.9	5 1/8 qt	4 3/8 qt
Cooling system (with reservoir at max level)		6.8	7 1/4 qt	6 qt
Manual transaxle fluid (MTF)		2.0	4 1/4 pt	3 1/2 pt
Automatic transaxle fluid (ATF)		7.9	8 3/8 qt	7 qt
CVT fluid		8.3	8 3/4 qt	7 1/4 qt
Brake and clutch fluid		—	—	—
Multi-purpose grease		—	—	—
Windshield washer fluid		4.5	4 3/4 qt	4 qt
Air conditioning system refrigerant		0.45 ± 0.05 kg	0.99 ± 0.11 lb	0.99 ± 0.11 lb
Air conditioning system oil	Type 1	120 m ℓ	4.1 fl oz	4.2 fl oz
	Type 2	100 m ℓ	3.4 fl oz	3.5 fl oz

SECTION GI
GENERAL INFORMATION

CONTENTS

SERVICE INFORMATION 2

PRECAUTIONS 2
Description 2
Precaution for Supplemental Restraint System (SRS) "AIR BAG" and "SEAT BELT PRE-TENSIONER" 2
Precaution Necessary for Steering Wheel Rotation After Battery Disconnect 2
General Precaution 3
Precaution for Three Way Catalyst 4
Precaution for Fuel (Unleaded Regular Gasoline Recommended) 4
Precaution for Multiport Fuel Injection System or Engine Control System 5
Precaution for Hoses 5
Precaution for Engine Oils 6
Precaution for Air Conditioning 6

HOW TO USE THIS MANUAL 7
Description 7
Terms 7
Units 7
Contents 7
Relation between Illustrations and Descriptions 8
Component 8
How to Follow Trouble Diagnosis 9
How to Read Wiring Diagram 13
Abbreviations 20

SERVICE INFORMATION FOR ELECTRICAL INCIDENT 22
How to Check Terminal 22
How to Perform Efficient Diagnosis for an Electrical Incident 25
Control Units and Electrical Parts 32

CONSULT-III CHECKING SYSTEM 35
Description 35
Function and System Application 35
CONSULT-III Data Link Connector (DLC) Circuit....36

LIFTING POINT 38
Special Service Tool 38
Garage Jack and Safety Stand and 2-Pole Lift 38
Board-On Lift 39

TOW TRUCK TOWING 40
Tow Truck Towing 40
Vehicle Recovery (Freeing a Stuck Vehicle) 40

TIGHTENING TORQUE OF STANDARD BOLTS 41
Tightening Torque Table 41

RECOMMENDED CHEMICAL PRODUCTS AND SEALANTS 42
Recommended Chemical Product and Sealant 42

IDENTIFICATION INFORMATION 43
Model Variation 43
Dimensions 46
Wheels & Tires 46

TERMINOLOGY 47
SAE J1930 Terminology List 47

SERVICE INFORMATION

PRECAUTIONS

Description

INFOID:0000000001702421

Observe the following precautions to ensure safe and proper servicing. These precautions are not described in each individual section.

Precaution for Supplemental Restraint System (SRS) "AIR BAG" and "SEAT BELT PRE-TENSIONER"

INFOID:0000000001702422

The Supplemental Restraint System such as “AIR BAG” and “SEAT BELT PRE-TENSIONER”, used along with a front seat belt, helps to reduce the risk or severity of injury to the driver and front passenger for certain types of collision. Information necessary to service the system safely is included in the SRS and SB section of this Service Manual.

WARNING:

- **To avoid rendering the SRS inoperative, which could increase the risk of personal injury or death in the event of a collision which would result in air bag inflation, all maintenance must be performed by an authorized NISSAN/INFINITI dealer.**
- **Improper maintenance, including incorrect removal and installation of the SRS, can lead to personal injury caused by unintentional activation of the system. For removal of Spiral Cable and Air Bag Module, see the SRS section.**
- **Do not use electrical test equipment on any circuit related to the SRS unless instructed to in this Service Manual. SRS wiring harnesses can be identified by yellow and/or orange harnesses or harness connectors.**

Precaution Necessary for Steering Wheel Rotation After Battery Disconnect

INFOID:0000000001702423

NOTE:

- This Procedure is applied only to models with Intelligent Key system and NATS (NISSAN ANTI-THEFT SYSTEM).
- Remove and install all control units after disconnecting both battery cables with the ignition knob in the ″LOCK″ position.
- Always use CONSULT-III to perform self-diagnosis as a part of each function inspection after finishing work. If DTC is detected, perform trouble diagnosis according to self-diagnostic results.

For models equipped with the Intelligent Key system and NATS, an electrically controlled steering lock mechanism is adopted on the key cylinder.
For this reason, if the battery is disconnected or if the battery is discharged, the steering wheel will lock and steering wheel rotation will become impossible.
If steering wheel rotation is required when battery power is interrupted, follow the procedure below before starting the repair operation.

OPERATION PROCEDURE

1. Connect both battery cables.
   NOTE:
   Supply power using jumper cables if battery is discharged.
2. Use the Intelligent Key or mechanical key to turn the ignition switch to the ″ACC″ position. At this time, the steering lock will be released.
3. Disconnect both battery cables. The steering lock will remain released and the steering wheel can be rotated.
4. Perform the necessary repair operation.
5. When the repair work is completed, return the ignition switch to the ″LOCK″ position before connecting the battery cables. (At this time, the steering lock mechanism will engage.)
6. Perform a self-diagnosis check of all control units using CONSULT-III.

General Precaution

INFOID:0000000001702424

- Do not operate the engine for an extended period of time without proper exhaust ventilation.
  Keep the work area well ventilated and free of any flammable materials. Special care should be taken when handling any flammable or poisonous materials, such as gasoline, refrigerant gas, etc. When working in a pit or other enclosed area, be sure to properly ventilate the area before working with hazardous materials.
  Do not smoke while working on the vehicle.

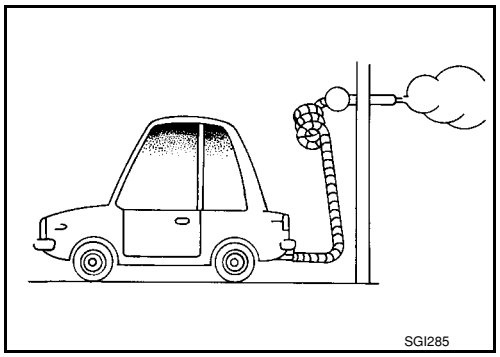

- Before jacking up the vehicle, apply wheel chocks or other tire blocks to the wheels to prevent the vehicle from moving. After jacking up the vehicle, support the vehicle weight with safety stands at the points designated for proper lifting before working on the vehicle.
  These operations should be done on a level surface.
- When removing a heavy component such as the engine or transaxle/transmission, be careful not to lose your balance and drop them. Also, do not allow them to strike adjacent parts, especially the brake tubes and master cylinder.

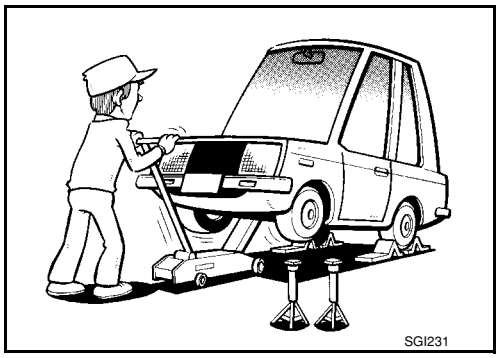

- Before starting repairs which do not require battery power:
  Turn off ignition switch.
  Disconnect the negative battery terminal.
- If the battery terminals are disconnected, recorded memory of radio and each control unit is erased.
- Battery posts, terminals and related accessories contain lead and lead compounds. Wash hands after handling.

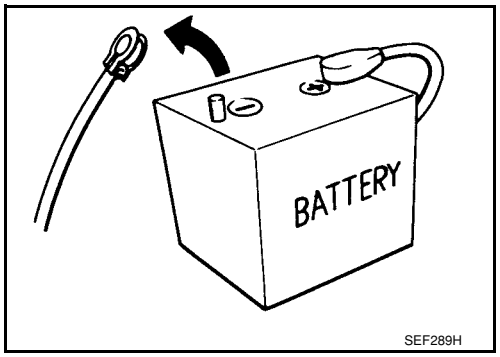

- To prevent serious burns:
  Avoid contact with hot metal parts.
  Do not remove the radiator cap when the engine is hot.
- Dispose of or recycle drained oil or the solvent used for cleaning parts in an appropriate manner.
- Do not attempt to top off the fuel tank after the fuel pump nozzle shuts off automatically.
  Continued refueling may cause fuel overflow, resulting in fuel spray and possibly a fire.
- Clean all disassembled parts in the designated liquid or solvent prior to inspection or assembly.
- Replace oil seals, gaskets, packings, O-rings, locking washers, cotter pins, self-locking nuts, etc. with new ones.

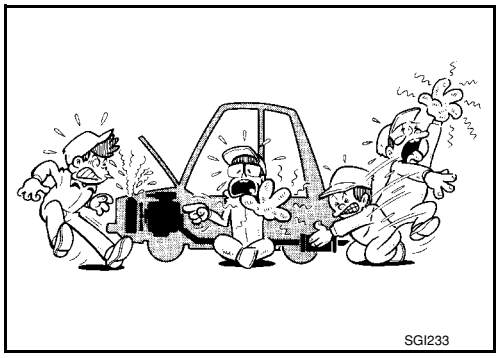

- Replace inner and outer races of tapered roller bearings and needle bearings as a set.
- Arrange the disassembled parts in accordance with their assembled locations and sequence.
- Do not touch the terminals of electrical components which use microcomputers (such as ECM).
  Static electricity may damage internal electronic components.
- After disconnecting vacuum or air hoses, attach a tag to indicate the proper connection.
- Use only the fluids and lubricants specified in this manual.
- Use approved bonding agent, sealants or their equivalents when required.

- Use hand tools, power tools (disassembly only) and recommended special tools where specified for safe and efficient service repairs.
- When repairing the fuel, oil, water, vacuum or exhaust systems, check all affected lines for leaks.

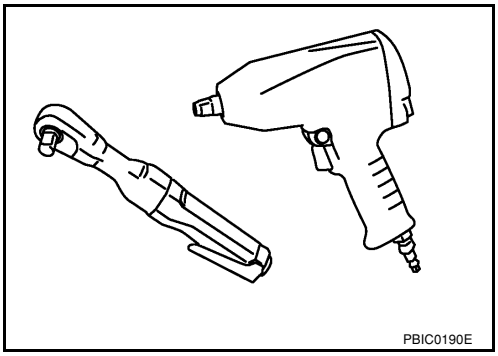

- Before servicing the vehicle:
  Protect fenders, upholstery and carpeting with appropriate covers.
  Take caution that keys, buckles or buttons do not scratch paint.

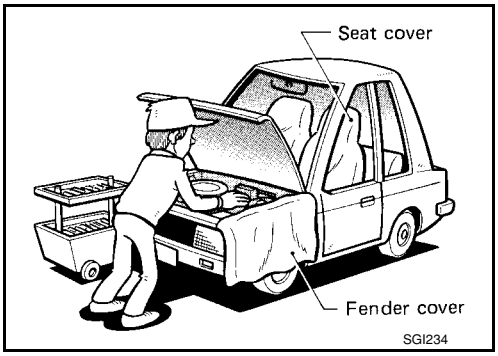

WARNING:
To prevent ECM from storing the diagnostic trouble codes, do not carelessly disconnect the harness connectors which are related to the engine control system and TCM (transmission control module) system. The connectors should be disconnected only when working according to the WORK FLOW of TROUBLE DIAGNOSES in EC and AT sections.

Precaution for Three Way Catalyst

INFOID:0000000001702425

If a large amount of unburned fuel flows into the catalyst, the catalyst temperature will be excessively high. To prevent this, follow the instructions.
- Use unleaded gasoline only. Leaded gasoline will seriously damage the three way catalyst.
- When checking for ignition spark or measuring engine compression, make tests quickly and only when necessary.
- Do not run engine when the fuel tank level is low, otherwise the engine may misfire, causing damage to the catalyst.

Do not place the vehicle on flammable material. Keep flammable material off the exhaust pipe and the three way catalyst.

Precaution for Fuel (Unleaded Regular Gasoline Recommended)

INFOID:0000000001702426

Use unleaded regular gasoline with an octane rating of at least 87 AKI (Anti-Knock Index) number (Research octane number 91).

CAUTION:
Do not use leaded gasoline. Using leaded gasoline will damage the three way catalyst. Do not use E-85 fuel (85% fuel ethanol, 15% unleaded gasoline) unless the vehicle is specifically designed for E-85 fuel (i.e. Flexible Fuel Vehicle - FFV models). Using a fuel other than that specified could adversely affect the emission control devices and systems, and could also affect the warranty coverage validity.

Precaution for Multiport Fuel Injection System or Engine Control System

INFOID:0000000001702427

- Before connecting or disconnecting any harness connector for the multiport fuel injection system or ECM:
  Turn ignition switch to “OFF” position.
  Disconnect negative battery terminal.
  Otherwise, there may be damage to ECM.
- Before disconnecting pressurized fuel line from fuel pump to injectors, be sure to release fuel pressure.
- Be careful not to jar components such as ECM and mass air flow sensor.

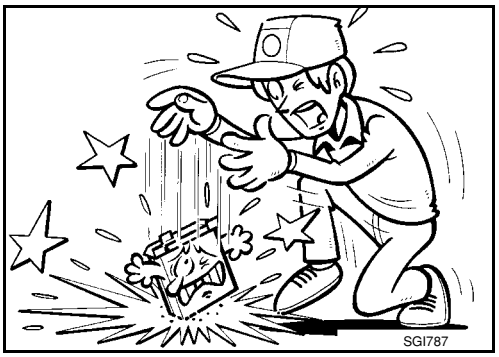

Precaution for Hoses

INFOID:0000000001702428

HOSE REMOVAL AND INSTALLATION

- To prevent damage to rubber hose, do not pry off rubber hose with tapered tool or screwdriver.

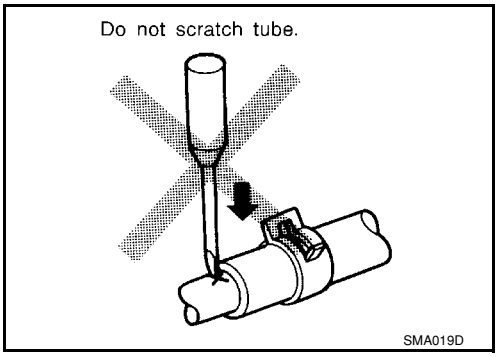

- To reinstall the rubber hose securely, make sure that hose insertion length and orientation is correct. (If tube is equipped with hose stopper, insert rubber hose into tube until it butts up against hose stopper.)

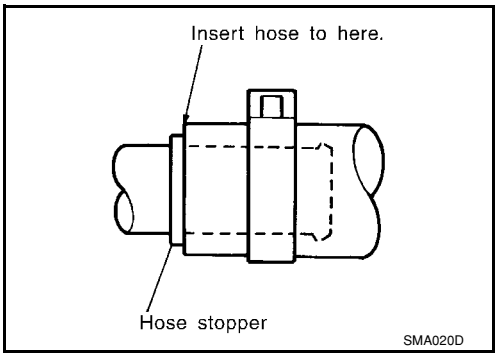

HOSE CLAMPING

- If old rubber hose is re-used, install hose clamp in its original position (at the indentation where the old clamp was). If there is a trace of tube bulging left on the old rubber hose, align rubber hose at that position.
- Discard old clamps; replace with new ones.

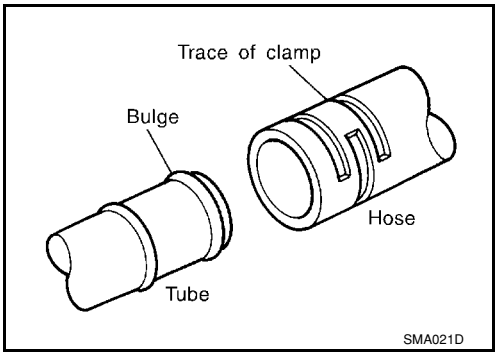

- After installing plate clamps, apply force to them in the direction of the arrow, tightening rubber hose equally all around.

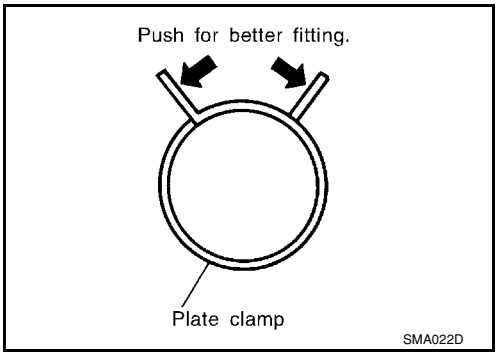

Precaution for Engine Oils

INFOID:0000000001702429

Prolonged and repeated contact with used engine oil may cause skin cancer. Try to avoid direct skin contact with used oil.
If skin contact is made, wash thoroughly with soap or hand cleaner as soon as possible.

HEALTH PROTECTION PRECAUTIONS

- Avoid prolonged and repeated contact with oils, particularly used engine oils.
- Wear protective clothing, including impervious gloves where practicable.
- Do not put oily rags in pockets.
- Avoid contaminating clothes, particularly underpants, with oil.
- Heavily soiled clothing and oil-impregnated footwear should not be worn. Overalls must be cleaned regularly.
- First aid treatment should be obtained immediately for open cuts and wounds.
- Use barrier creams, applying them before each work period, to help the removal of oil from the skin.
- Wash with soap and water to ensure all oil is removed (skin cleansers and nail brushes will help). Preparations containing lanolin replace the natural skin oils which have been removed.
- Do not use gasoline, kerosene, diesel fuel, gas oil, thinners or solvents for cleaning skin.
- If skin disorders develop, obtain medical advice without delay.
- Where practical, degrease components prior to handling.
- Where there is a risk of eye contact, eye protection should be worn, for example, chemical goggles or face shields; in addition an eye wash facility should be provided.

Precaution for Air Conditioning

INFOID:0000000001702430

Use an approved refrigerant recovery unit any time the air conditioning system must be discharged. Refer to MTC-74, "HFC-134a (R-134a) Service Procedure" for specific instructions.

HOW TO USE THIS MANUAL

Description

INFOID:0000000001702431

This volume explains “Removal, Disassembly, Installation, Inspection and Adjustment” and “Trouble Diagnoses”.

Terms

INFOID:0000000001702432

- The captions **WARNING** and **CAUTION** warn you of steps that must be followed to prevent personal injury and/or damage to some part of the vehicle.
  WARNING indicates the possibility of personal injury if instructions are not followed.
  CAUTION indicates the possibility of component damage if instructions are not followed.
  BOLD TYPED STATEMENTS except **WARNING** and **CAUTION** give you helpful information.
  Standard value:Tolerance at inspection and adjustment.
  Limit value:The maximum or minimum limit value that should not be exceeded at inspection and adjustment.

Units

INFOID:0000000001702433

- The **UNITS** given in this manual are primarily expressed as the SI UNIT (International System of Unit), and alternatively expressed in the metric system and in the yard/pound system.
  Also with regard to tightening torque of bolts and nuts, there are descriptions both about range and about the standard tightening torque.

  “Example”
  Range

  Outer Socket Lock Nut : 59 - 78 N·m (6.0 - 8.0 kg-m, 43 - 58 ft-lb)

  Standard

  Drive Shaft Installation Bolt : 44.3 N·m (4.5 kg-m, 33 ft-lb)

Contents

INFOID:0000000001702434

- **ALPHABETICAL INDEX** is provided at the end of this manual so that you can rapidly find the item and page you are searching for.
- **A QUICK REFERENCE INDEX**, a black tab (e.g. BR) is provided on the first page. You can quickly find the first page of each section by matching it to the section's black tab.
- **THE CONTENTS** are listed on the first page of each section.
- **THE TITLE** is indicated on the upper portion of each page and shows the part or system.
- **THE PAGE NUMBER** of each section consists of two or three letters which designate the particular section and a number (e.g. “BR-5”).
- **THE SMALL ILLUSTRATIONS** show the important steps such as inspection, use of special tools, knacks of work and hidden or tricky steps which are not shown in the previous large illustrations.
  Assembly, inspection and adjustment procedures for the complicated units such as the automatic transaxle or transmission, etc. are presented in a step-by-step format where necessary.

Relation between Illustrations and Descriptions

INFOID:0000000001702435

The following sample explains the relationship between the part description in an illustration, the part name in the text and the service procedures.

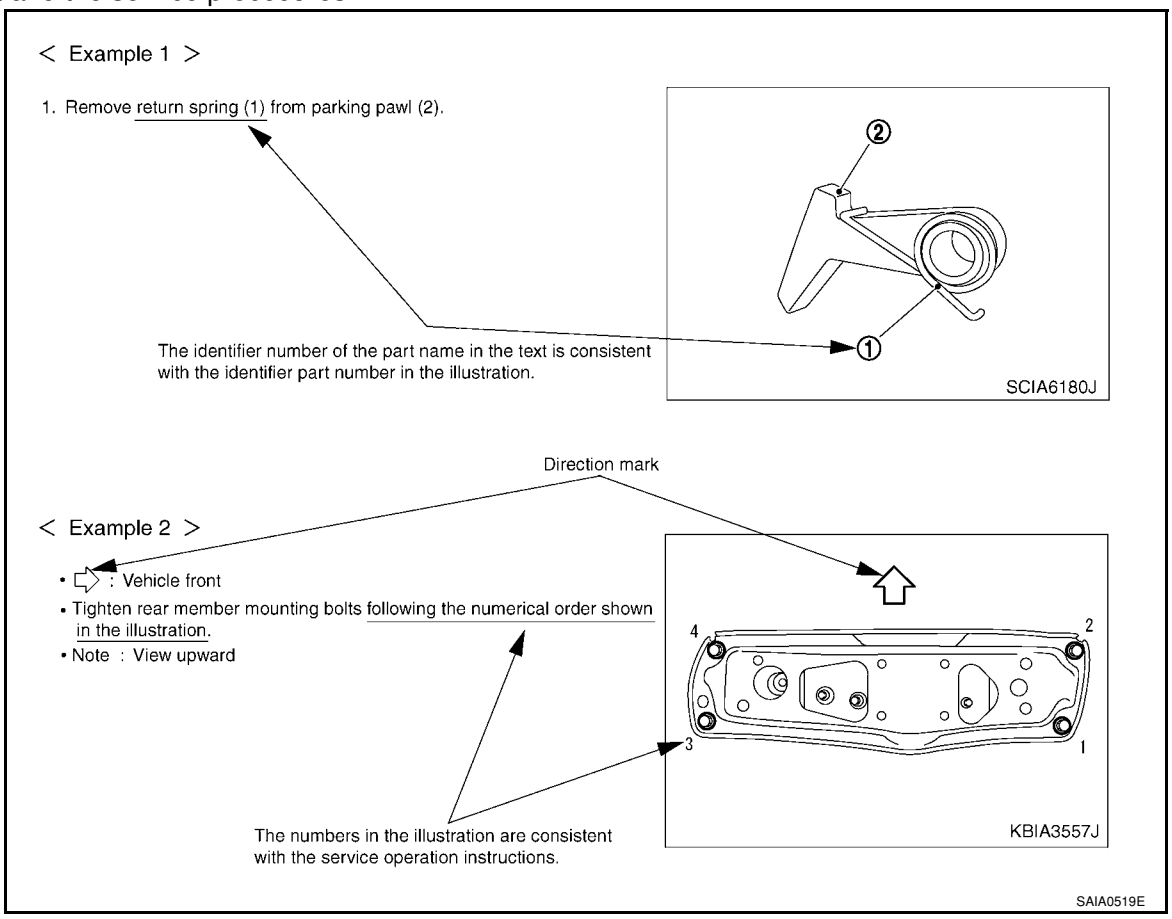

Component

INFOID:0000000001702436

- **THE LARGE ILLUSTRATIONS** are exploded views (see the following) and contain tightening torques, lubrication points, section number of the **PARTS CATALOG** (e.g. SEC. 440) and other information necessary to perform repairs.
  The illustrations should be used in reference to service matters only. When ordering parts, refer to the appropriate **PARTS CATALOG**.
  Components shown in an illustration may be identified by a circled number. When this style of illustration is used, the text description of the components will follow the illustration.

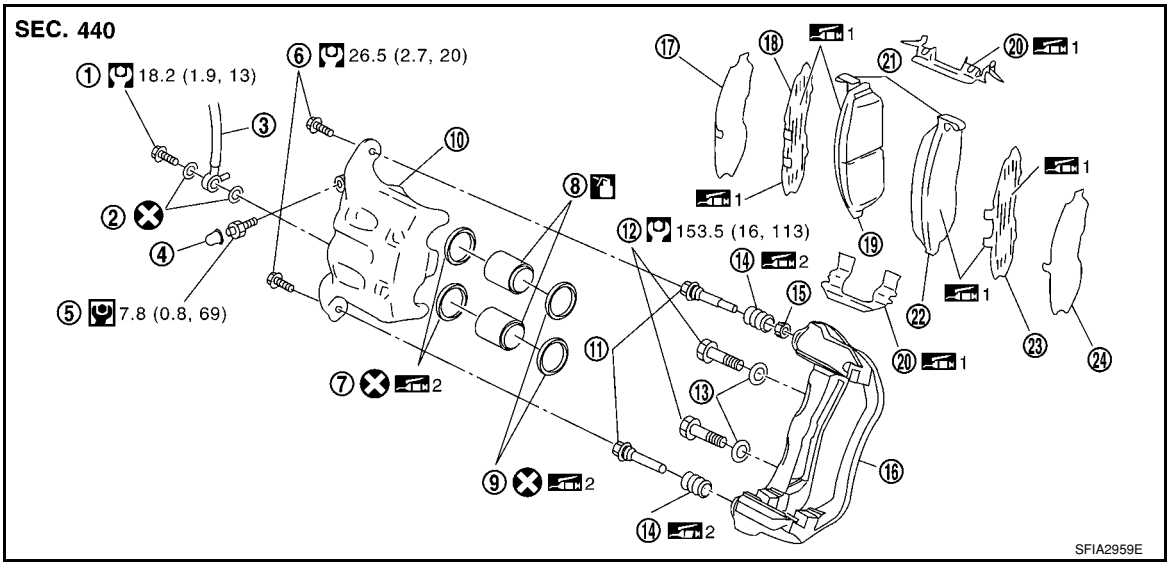

1. Union bolt	2. Copper washer	3. Brake hose
4. Cap	5. Bleed valve	6. Sliding pin bolt
7. Piston seal	8. Piston	9. Piston boot
10. Cylinder body	11. Sliding pin	12. Torque member mounting bolt
13. Washer	14. Sliding pin boot	15. Bushing
16. Torque member	17. Inner shim cover	18. Inner shim
19. Inner pad	20. Pad retainer	21. Pad wear sensor
22. Outer pad	23. Outer shim	24. Outer shim cover
1: PBC (Poly Butyl Cuprysil) grease or silicone-based grease	2: Rubber grease	: Brake fluid

Refer to GI section for additional symbol definitions.

SYMBOLS

SYMBOL	DESCRIPTION		SYMBOL	DESCRIPTION
	Tightening torque The tightening torque specifications of bolts and nuts may be presented as either a range or a standard tightening torque.	: N•m (kg-m, ft-lb)		Always replace after every disassembly.
		: N•m (kg-m, in-lb)	P	Apply petroleum jelly.
	Should be lubricated with grease. Unless otherwise indicated, use recommended multi-purpose grease.		M	Apply molybdenum added petroleum jelly.
	Should be lubricated with oil.		ATF	Apply ATF.
	Sealing point		★	Select with proper thickness.
L	Sealing point with locking sealant.		☆	Adjustment is required.
	Checking point			

SAIA0749E

How to Follow Trouble Diagnosis

INFOID:0000000001702437

DESCRIPTION

NOTICE:

Trouble diagnoses indicate work procedures required to diagnose problems effectively. Observe the following instructions before diagnosing.

1. **Before performing trouble diagnoses, read the “Preliminary Check”, the “Symptom Chart” or the “Work Flow”.**
2. **After repairs, re-check that the problem has been completely eliminated.**

3. **Refer to Component Parts and Harness Connector Location for the Systems described in each section for identification/location of components and harness connectors.**
4. **Refer to the Circuit Diagram for quick pinpoint check.**
   If you need to check circuit continuity between harness connectors in more detail, such as when a sub-harness is used, refer to Wiring Diagram in each individual section and Harness Layout in PG section for identification of harness connectors.
5. **When checking circuit continuity, ignition switch should be OFF.**
6. **Before checking voltage at connectors, check battery voltage.**
7. **After accomplishing the Diagnostic Procedures and Electrical Components Inspection, make sure that all harness connectors are reconnected as they were.**

HOW TO FOLLOW TEST GROUPS IN TROUBLE DIAGNOSES

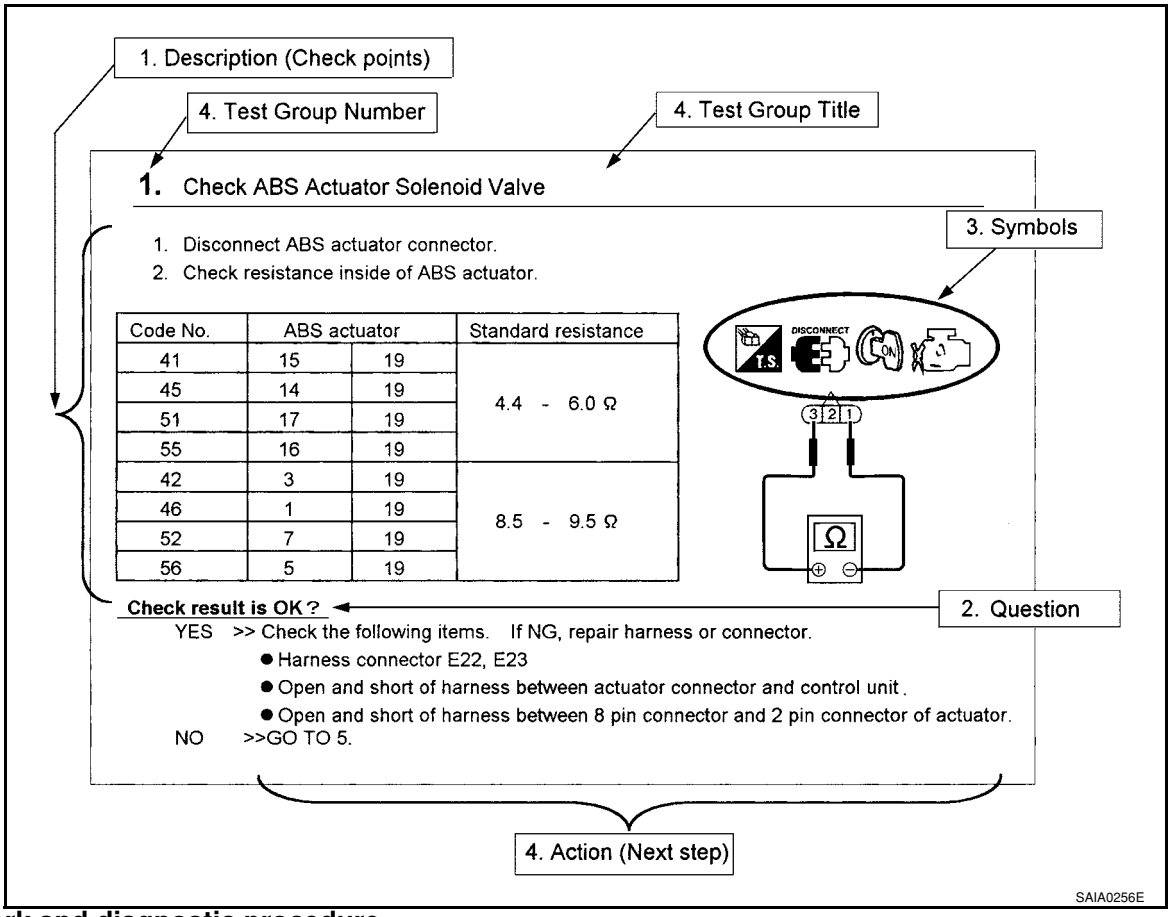

1. **Work and diagnostic procedure**
   Start to diagnose a problem using procedures indicated in enclosed test groups.
2. **Questions and required results**
   Questions and required results are indicated in bold type in test group.
   The meaning of are as follows:

   a. Battery voltage → 11 - 14V or approximately 12V
   b. Voltage : Approximately 0V → Less than 1V

3. **Symbol used in illustration**
   Symbols included in illustrations refer to measurements or procedures. Before diagnosing a problem, familiarize yourself with each symbol. Refer to "Connector Symbols" in GI Section and "KEY TO SYMBOLS SIGNIFYING MEASUREMENTS OR PROCEDURES" below.
4. **Action items**
   Next action for each test group is indicated based on result of each question. Test group number is shown in the left upper portion of each test group.

HARNESS WIRE COLOR AND CONNECTOR NUMBER INDICATION

There are two types of harness wire color and connector number indication.

TYPE 1: Harness Wire Color and Connector Number are Shown in Illustration

- Letter designations next to test meter probe indicate harness wire color.
- Connector numbers in a single circle (e.g. M33) indicate harness connectors.
- Connector numbers in a double circle (e.g. F211) indicate component connectors.

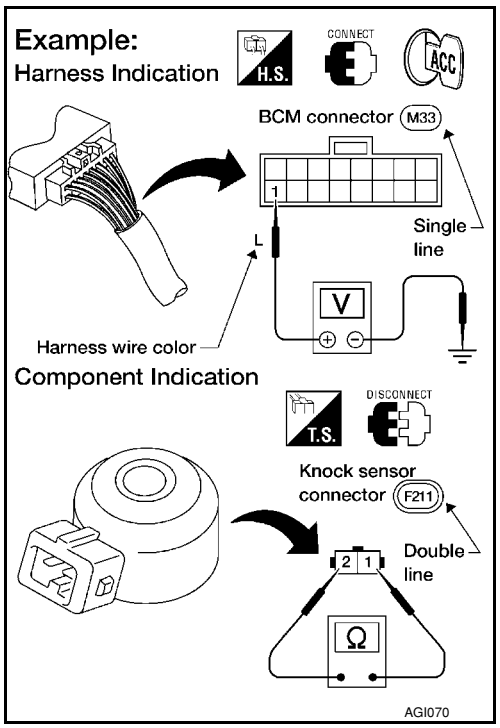

TYPE 2: Harness Wire Color and Connector Number are Shown in Text

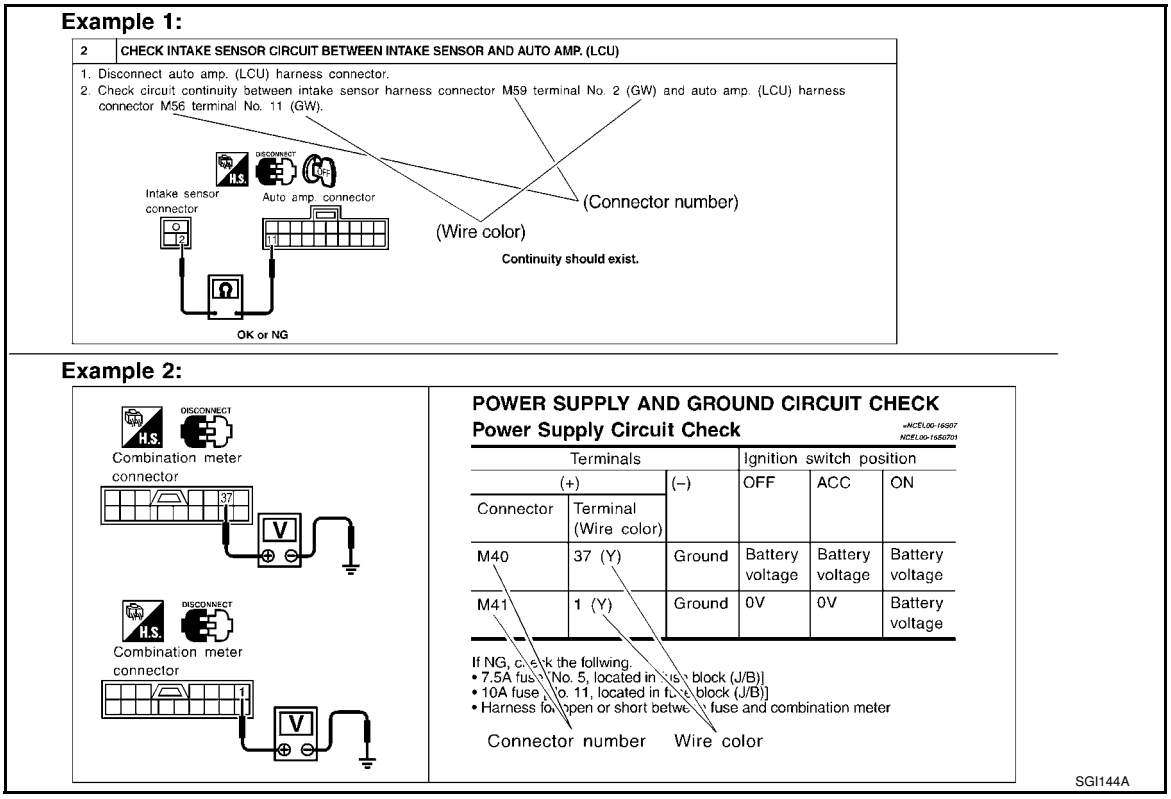

KEY TO SYMBOLS SIGNIFYING MEASUREMENTS OR PROCEDURES

SYMBOL	DESCRIPTION	SYMBOL	DESCRIPTION
	Check after disconnecting the connector to be measured.	GST	Procedure with Generic Scan Tool. (GST, OBD-II scan tool)
	Check after connecting the connector to be measured.	NO TOOLS	Procedure without CONSULT, CONSULT-II or GST
	Insert key into ignition switch.	A/C OFF	A/C switch is "OFF".
	Remove key from ignition switch.	A/C ON	A/C switch is "ON".
	Insert and remove key repeatedly.		REC switch is "ON".
OFF	Turn ignition switch to "OFF" position.		REC switch is "OFF".
ACC	Turn ignition switch to "ACC" position.		Fan switch is "ON". (At any position except for "OFF" position)
ON	Turn ignition switch to "ON" position.		Fan switch is "OFF".
ST	Turn ignition switch to "START" position.	FUSE	Apply fuse.
OFF → ACC	Turn ignition switch from "OFF" to "ACC" position.	FUSE BAT	Apply positive voltage from battery with fuse directly to components.
ACC → ON	Turn ignition switch from "ACC" to "ON" position.		
ACC → OFF	Turn ignition switch from "ACC" to "OFF" position.		

SAIA0750E

SYMBOL	DESCRIPTION	SYMBOL	DESCRIPTION
OFF ON	Turn ignition switch from "OFF" to "ON" position.		Drive vehicle.
ON OFF	Turn ignition switch from "ON" to "OFF" position.		
	Do not start engine, or check with engine stopped.	BAT	Disconnect battery negative cable.
	Start engine, or check with engine running.		Depress brake pedal.
	Apply parking brake.		Release brake pedal.
	Release parking brake.		Depress accelerator pedal.
C H	Check after engine is warmed up sufficiently.		Release accelerator pedal.
V	Votage should be measured with a voltmeter.	H.S. 8 V	Pin terminal check for SMJ type ECM or TCM connectors. **For details regarding the terminal arrangement, refer to the "ELECTRICAL UNITS" electrical reference page at the end of the manual.**
Ω	Circuit resistance should be measured with an ohmmeter.		
A	Current should be measured with an ammeter.		
	Pulse signal should be checked with an oscilloscope.		
	Procedure with CONSULT-II		
	Procedure without CONSULT-II		
P	Place selector lever in "P" position.		
N	Place selector lever in "N" position.		
	Jack up front portion.		
	Jack up rear portion.		
	Inspect under engine room.		
	Inspect under floor.		
	Inspect rear under floor.		

SAIA0751E

How to Read Wiring Diagram

INFOID:0000000001702438

CONNECTOR SYMBOLS

Most of connector symbols in wiring diagrams are shown from the terminal side.

- Connector symbols shown from the terminal side are enclosed by a single line and followed by the direction mark.
- Connector symbols shown from the harness side are enclosed by a double line and followed by the direction mark.
- Certain systems and components, especially those related to OBD, may use a new style slide-locking type harness connector. For description and how to disconnect, refer to PG section, “Description”, “HARNESS CONNECTOR”.

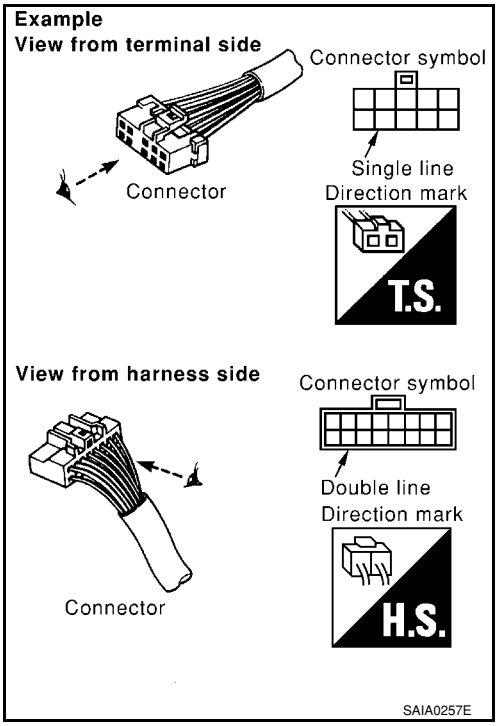

- Male and female terminals
  Connector guides for male terminals are shown in black and female terminals in white in wiring diagrams.

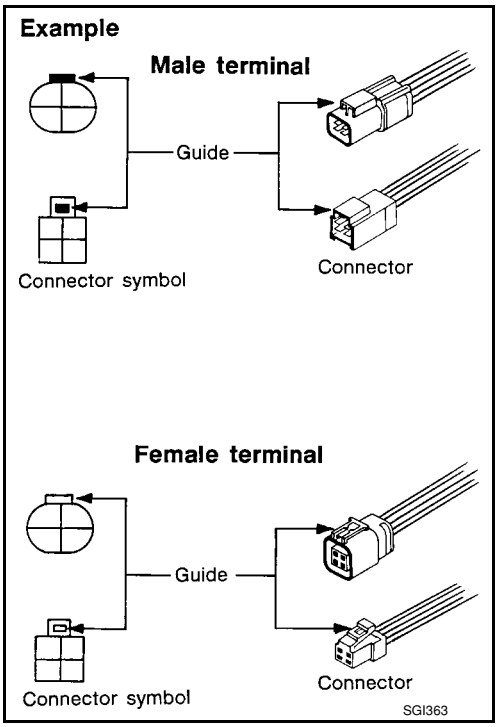

SAMPLE/WIRING DIAGRAM - EXAMPL -

- For detail, refer to following “DESCRIPTION”.

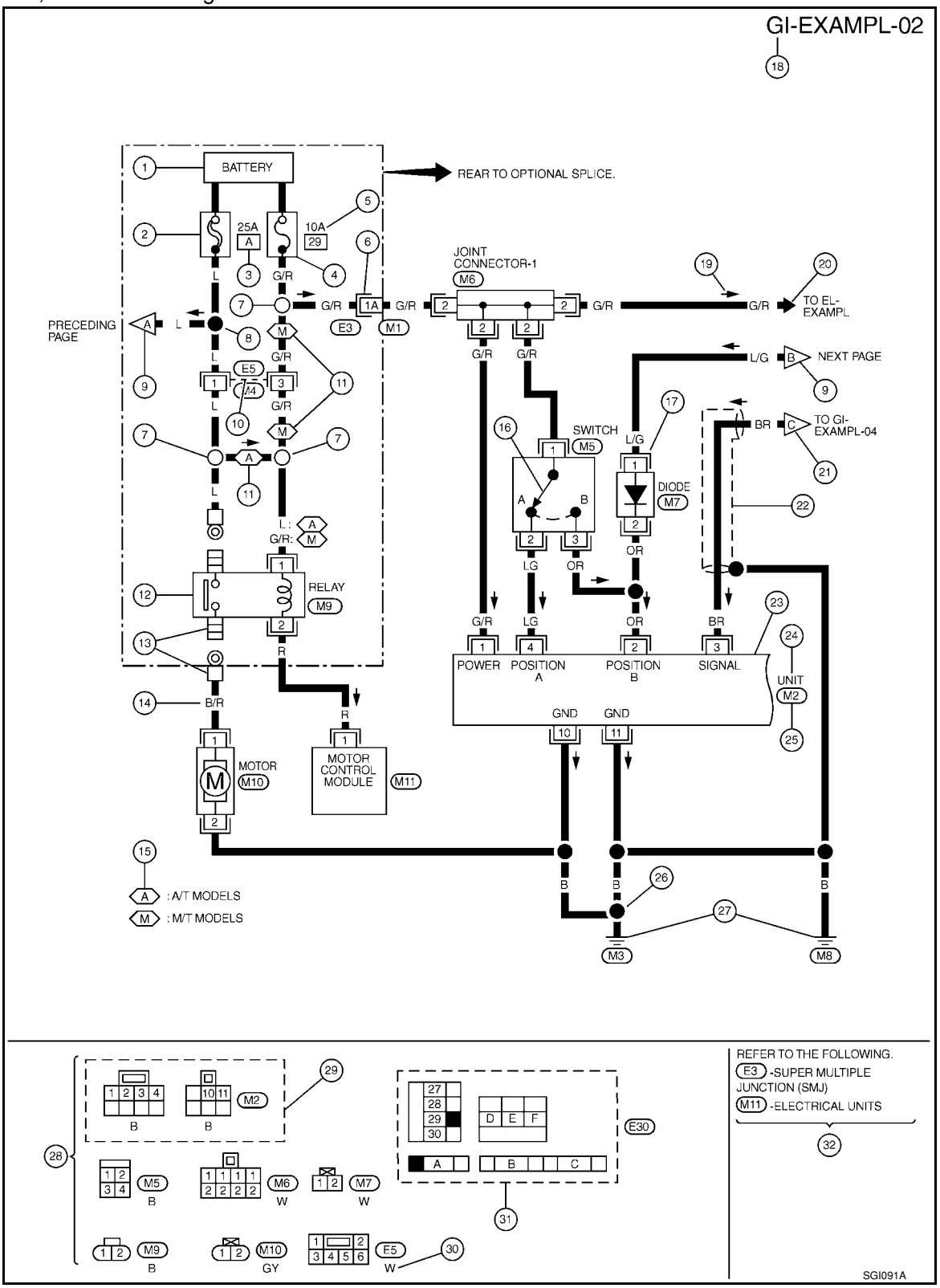

Optional Splice

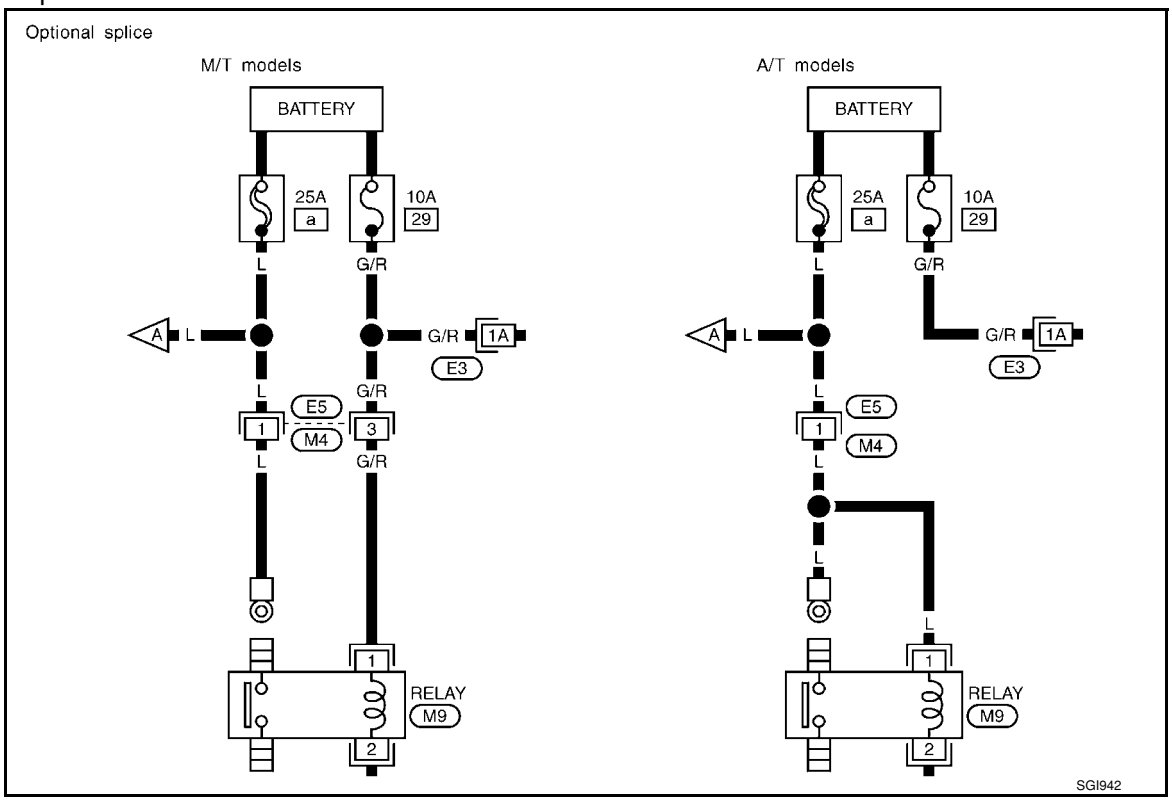

DESCRIPTION

Number	Item	Description
1	Power condition	• This shows the condition when the system receives battery positive voltage (can be operated).
2	Fusible link	• The double line shows that this is a fusible link. • The open circle shows current flow in, and the shaded circle shows current flow out.
3	Fusible link/fuse location	• This shows the location of the fusible link or fuse in the fusible link or fuse box. For arrangement, refer to PG section, POWER SUPPLY ROUTING.
4	Fuse	• The single line shows that this is a fuse. • The open circle shows current flow in, and the shaded circle shows current flow out.
5	Current rating	• This shows the current rating of the fusible link or fuse.
6	Connectors	• This shows that connector E3 is female and connector M1 is male. • The G/R wire is located in the 1A terminal of both connectors. • Terminal number with an alphabet (1A, 5B, etc.) indicates that the connector is SMJ connector. Refer to PG section, SMJ (SUPER MULTIPLE JUNCTION).
7	Optional splice	• The open circle shows that the splice is optional depending on vehicle application.
8	Splice	• The shaded circle shows that the splice is always on the vehicle.
9	Page crossing	• This arrow shows that the circuit continues to an adjacent page. • The A will match with the A on the preceding or next page.
10	Common connector	• The dotted lines between terminals show that these terminals are part of the same connector.
11	Option abbreviation	• This shows that the circuit is optional depending on vehicle application.
12	Relay	• This shows an internal representation of the relay. For details, refer to PG section, STANDARDIZED RELAY.
13	Connectors	• This shows that the connector is connected to the body or a terminal with bolt or nut.

Number	Item	Description
14	Wire color	• This shows a code for the color of the wire.
		B = Black W = White R = Red G = Green L = Blue Y = Yellow LG = Light Green BR = Brown OR or O = Orange P = Pink PU or V (Violet) = Purple GY or GR = Gray SB = Sky Blue CH = Dark Brown DG = Dark Green
		When the wire color is striped, the base color is given first, followed by the stripe color as shown below: Example: L/W = Blue with White Stripe
15	Option description	• This shows a description of the option abbreviation used on the page.
16	Switch	• This shows that continuity exists between terminals 1 and 2 when the switch is in the A position. Continuity exists between terminals 1 and 3 when the switch is in the B position.
17	Assembly parts	• Connector terminal in component shows that it is a harness incorporated assembly.
18	Cell code	• This identifies each page of the wiring diagram by section, system and wiring diagram page number.
19	Current flow arrow	• Arrow indicates electric current flow, especially where the direction of standard flow (vertically downward or horizontally from left to right) is difficult to follow. • A double arrow "↔" shows that current can flow in either direction depending on circuit operation.
20	System branch	• This shows that the system branches to another system identified by cell code (section and system).
21	Page crossing	• This arrow shows that the circuit continues to another page identified by cell code. • The C will match with the C on another page within the system other than the next or preceding pages.
22	Shielded line	• The line enclosed by broken line circle shows shield wire.
23	Component box in wave line	• This shows that another part of the component is also shown on another page (indicated by wave line) within the system.
24	Component name	• This shows the name of a component.
25	Connector number	• This shows the connector number. • The letter shows which harness the connector is located in. • Example: **M**: main harness. For detail and to locate the connector, refer to PG section "Main Harness", "Harness Layout". A coordinate grid is included for complex harnesses to aid in locating connectors.
26	Ground (GND)	• The line spliced and grounded under wire color shows that ground line is spliced at the grounded connector.
27	Ground (GND)	• This shows the ground connection. For detailed ground distribution information, refer to "Ground Distribution" in PG section.
28	Connector views	• This area shows the connector faces of the components in the wiring diagram on the page.
29	Common component	• Connectors enclosed in broken line show that these connectors belong to the same component.
30	Connector color	• This shows a code for the color of the connector. For code meaning, refer to wire color codes, Number 14 of this chart.
31	Fusible link and fuse box	• This shows the arrangement of fusible link(s) and fuse(s), used for connector views of "POWER SUPPLY ROUTING" in PG section. The open square shows current flow in, and the shaded square shows current flow out.
32	Reference area	• This shows that more information on the Super Multiple Junction (SMJ) and Joint Connectors (J/C) exists on the PG section. Refer to "Reference Area" for details.

Harness Indication

- Letter designations next to test meter probe indicate harness (connector) wire color.
- Connector numbers in a single circle M33 indicate harness connectors.

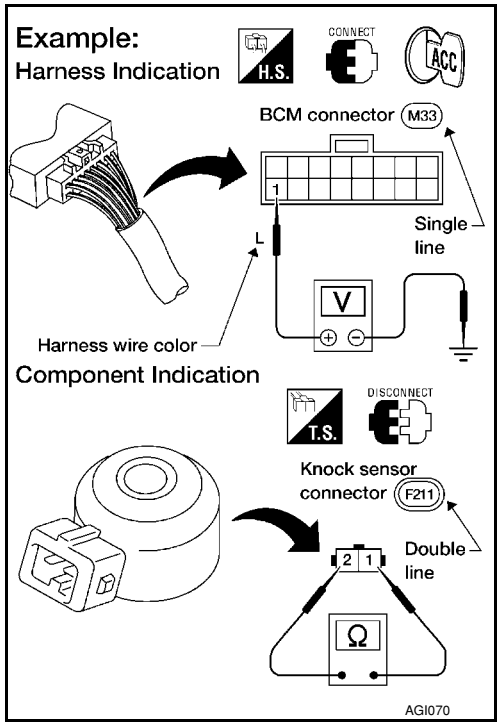

Component Indication
Connector numbers in a double circle F211 indicate component connectors.

Switch Positions
Switches are shown in wiring diagrams as if the vehicle is in the “normal” condition.
A vehicle is in the “normal” condition when:
- ignition switch is “OFF”,
- doors, hood and trunk lid/back door are closed,
- pedals are not depressed, and
- parking brake is released.

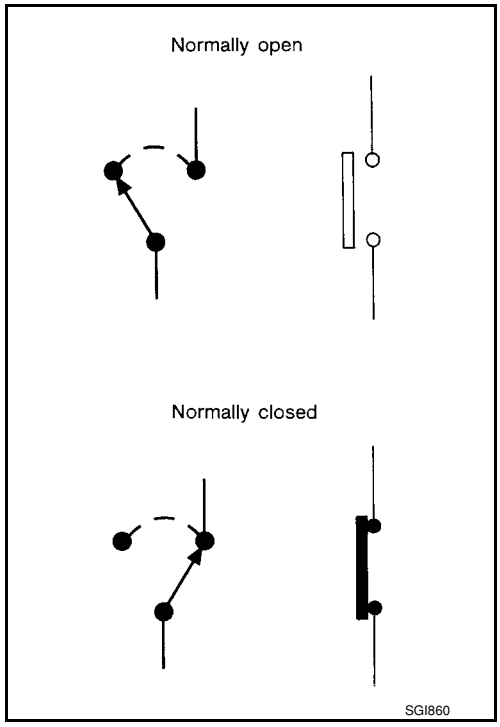

Detectable Lines and Non-Detectable Lines
In some wiring diagrams, two kinds of lines, representing wires, with different weight are used.

- A line with regular weight (wider line) represents a “detectable line for DTC (Diagnostic Trouble Code)”. A “detectable line for DTC” is a circuit in which ECM can detect its malfunctions with the on board diagnostic system.
- A line with less weight (thinner line) represents a “non-detectable line for DTC”. A “non-detectable line for DTC” is a circuit in which ECM cannot detect its malfunctions with the on board diagnostic system.

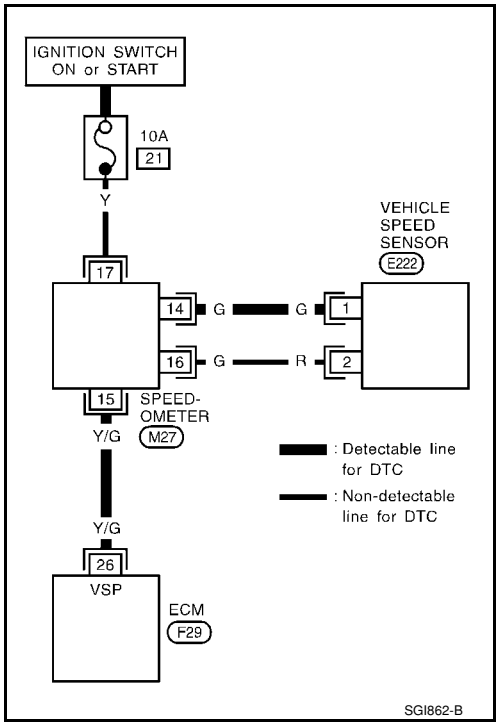

Multiple Switch

The continuity of multiple switch is described in two ways as shown below.

- The switch chart is used in schematic diagrams.
- The switch diagram is used in wiring diagrams.

Example

(SWITCH CHART)

WIPER SWITCH

	OFF	INT	LO	HI	WASH
1					○
2				○	
3	○	○	○		
4	○	○			
5		○			
6		○	○	○	○

(SWITCH DIAGRAM)

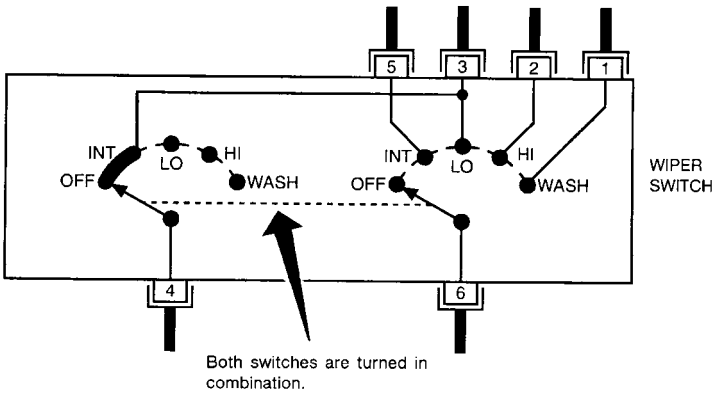

Continuity circuit of wiper switch

SWITCH POSITION	CONTINUITY CIRCUIT
OFF	3 - 4
INT	3 - 4, 5 - 6
LO	3 - 6
HI	2 - 6
WASH	1 - 6

SGI875

Reference Area

The Reference Area of the wiring diagram contains references to additional electrical reference pages at the end of the manual. If connector numbers and titles are shown in the Reference Area of the wiring diagram, these connector symbols are not shown in the Connector Area.

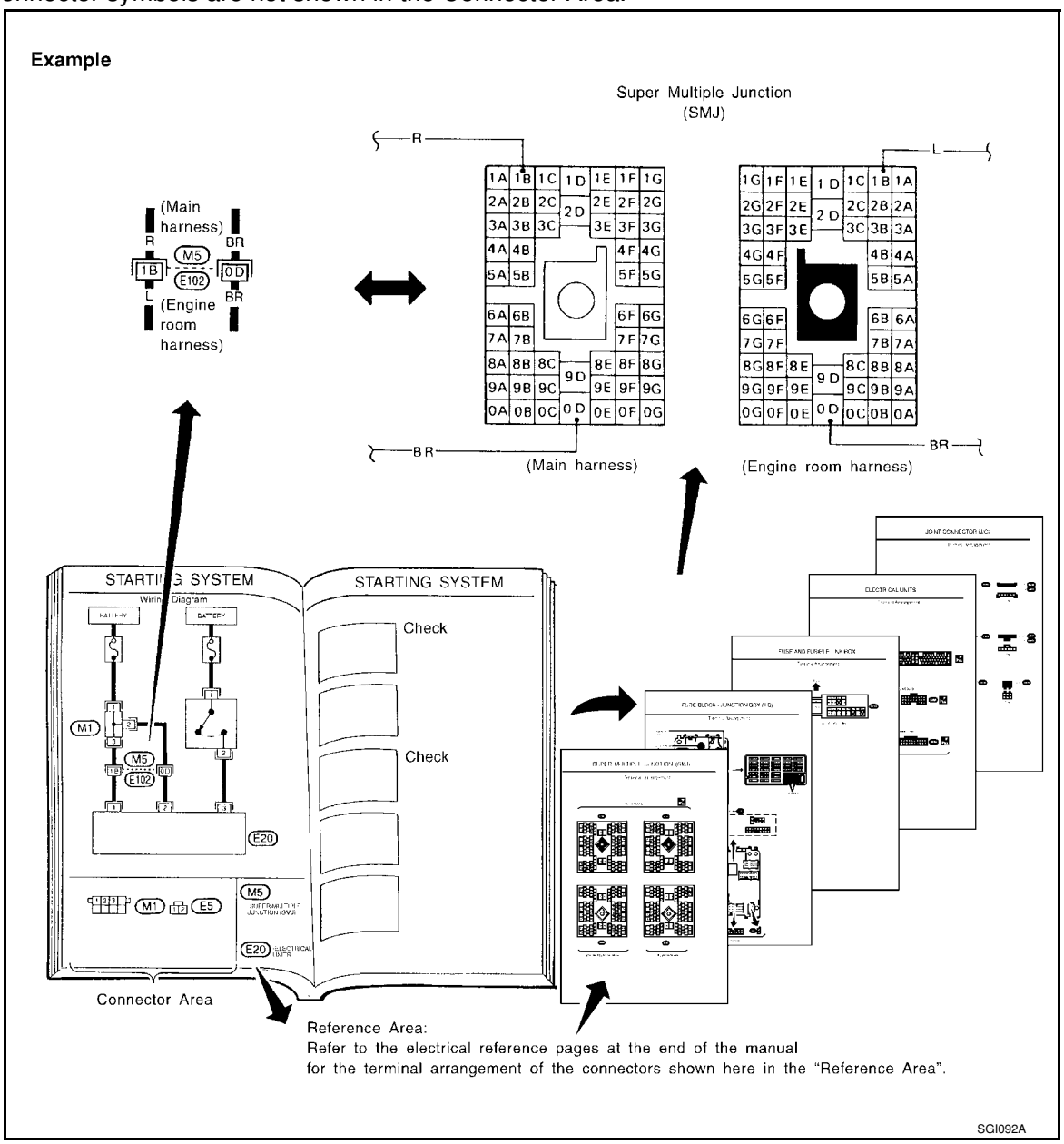

Abbreviations

INFOID:0000000001702439

The following **ABBREVIATIONS** are used:

ABBREVIATION	DESCRIPTION
A/C	Air Conditioner
A/T	Automatic Transaxle/Transmission
ATF	Automatic Transmission Fluid
CVT	Continuously Variable Transmission
D_1	Drive range 1st gear
D_2	Drive range 2nd gear
D_3	Drive range 3rd gear
D_4	Drive range 4th gear

ABBREVIATION	DESCRIPTION
FR, RR	Front, Rear
LH, RH	Left-Hand, Right-Hand
M/T	Manual Transaxle/Transmission
OD	Overdrive
P/S	Power Steering
SAE	Society of Automotive Engineers, Inc.
SDS	Service Data and Specifications
SST	Special Service Tools
2WD	2-Wheel Drive
2_2	2nd range 2nd gear
2_1	2nd range 1st gear
1_2	1st range 2nd gear
1_1	1st range 1st gear

SERVICE INFORMATION FOR ELECTRICAL INCIDENT

How to Check Terminal

INFOID:0000000001702440

CONNECTOR AND TERMINAL PIN KIT

Use the connector and terminal pin kits listed below when replacing connectors or terminals.
The connector and terminal pin kits contain some of the most commonly used NISSAN/INFINITI connectors and terminals. For detailed connector and terminal pin replacement procedures, refer to the latest NISSAN/INFINITI CONNECTOR AND TERMINAL PIN SERVICE MANUAL.

Tool number (Kent-Moore No.) Tool name	Description
- (J38751-95NI) Connector and terminal pin kit (NISSAN) - (J38751-95INF) Connector and terminal pin kit (INFINITI) - (J42992-98KIT) OBD and terminal repair kit - (J42992-2000UPD) OBD-II Connector Kit Update	J38751-95NI 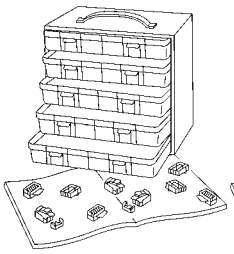 J38751-95INF 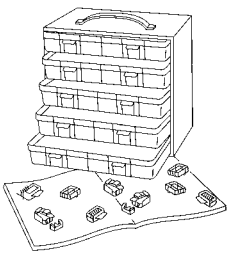 WAIA0004E J42992-98KIT 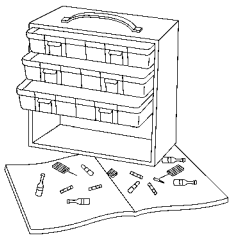 J42992-2000UPD 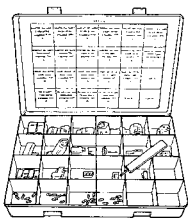 WAIA0005E

HOW TO PROBE CONNECTORS

Connector damage and an intermittent connection can result from improperly probing of the connector during circuit checks.
The probe of a digital multimeter (DMM) may not correctly fit the connector cavity. To correctly probe the connector, follow the procedures below using a “T” pin. For the best contact grasp the “T” pin using an alligator clip.

Probing from Harness Side

Standard type (not waterproof type) connector should be probed from harness side with “T” pin.

- If the connector has a rear cover such as a ECM connector, remove the rear cover before probing the terminal.
- Do not probe waterproof connector from harness side. Damage to the seal between wire and connector may result.

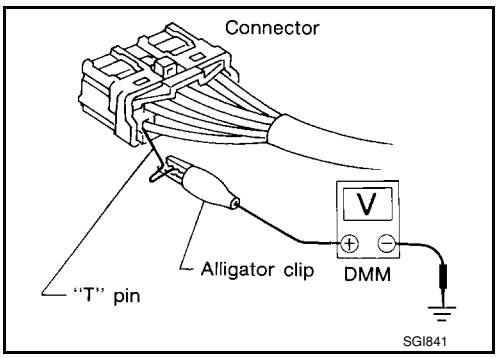

Probing from Terminal Side

FEMALE TERMINAL

- There is a small notch above each female terminal. Probe each terminal with the “T” pin through the notch.
  Do not insert any object other than the same type male terminal into female terminal.

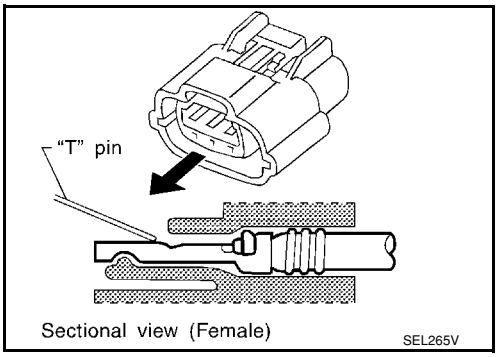

- Some connectors do not have a notch above each terminal. To probe each terminal, remove the connector retainer to make contact space for probing.

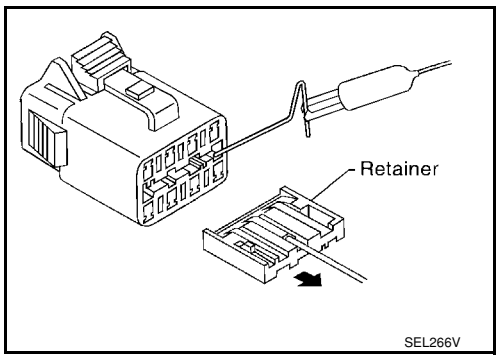

MALE TERMINAL
Carefully probe the contact surface of each terminal using a “T” pin.
Do not bend terminal.

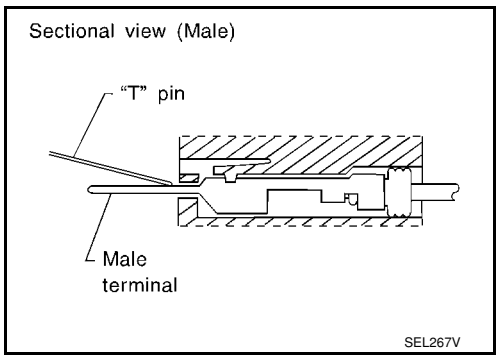

How to Check Enlarged Contact Spring of Terminal
An enlarged contact spring of a terminal may create intermittent signals in the circuit.
If the intermittent open circuit occurs, follow the procedure below to inspect for open wires and enlarged contact spring of female terminal.

1. Assemble a male terminal and approx. 10 cm (3.9 in) of wire.
   Use a male terminal which matches the female terminal.
2. Disconnect the suspected faulty connector and hold it terminal side up.

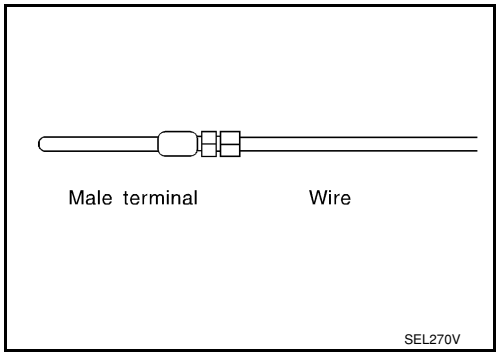

3. While holding the wire of the male terminal, try to insert the male terminal into the female terminal.
   Do not force the male terminal into the female terminal with your hands.

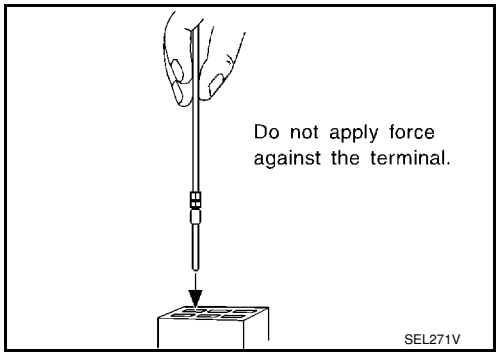

4. While moving the connector, check whether the male terminal can be easily inserted or not.

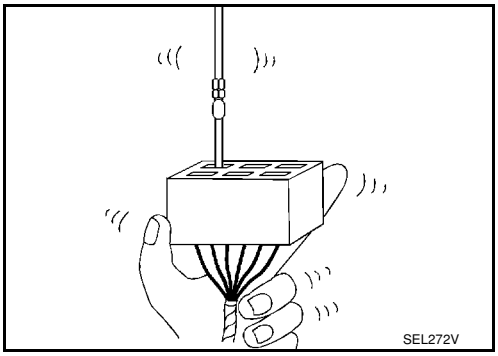

- If the male terminal can be easily inserted into the female terminal, replace the female terminal.

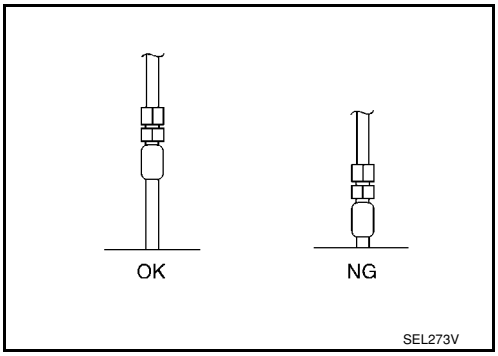

Waterproof Connector Inspection

If water enters the connector, it can short interior circuits. This may lead to intermittent problems. Check the following items to maintain the original waterproof characteristics.

RUBBER SEAL INSPECTION

- Most waterproof connectors are provided with a rubber seal between the male and female connectors. If the seal is missing, the waterproof performance may not meet specifications.
- The rubber seal may come off when connectors are disconnected. Whenever connectors are reconnected, make sure the rubber seal is properly installed on either side of male or female connector.

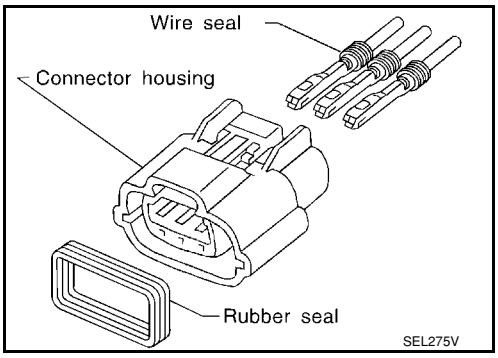

WIRE SEAL INSPECTION

The wire seal must be installed on the wire insertion area of a waterproof connector. Be sure that the seal is installed properly.

Terminal Lock Inspection

Check for unlocked terminals by pulling wire at the end of connector. An unlocked terminal may create intermittent signals in the circuit.

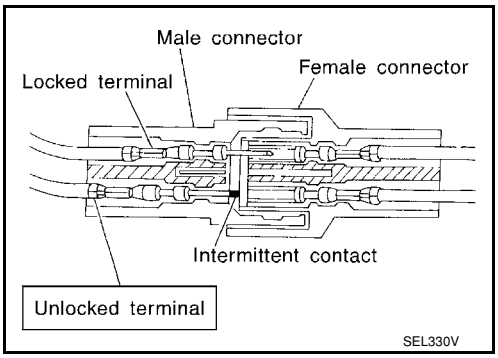

How to Perform Efficient Diagnosis for an Electrical Incident

INFOID:0000000001702441

WORK FLOW

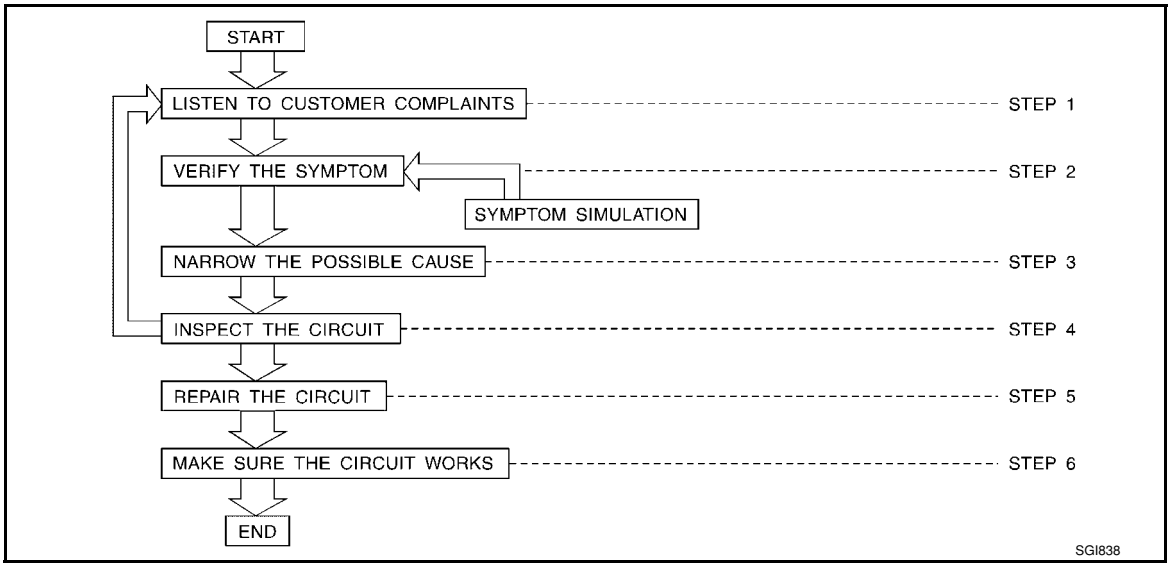

STEP	DESCRIPTION	
STEP 1	Get detailed information about the conditions and the environment when the incident occurred. The following are key pieces of information required to make a good analysis:	
	WHAT	Vehicle Model, Engine, Transmission/Transaxle and the System (i.e. Radio).
	WHEN	Date, Time of Day, Weather Conditions, Frequency.
	WHERE	Road Conditions, Altitude and Traffic Situation.
	HOW	System Symptoms, Operating Conditions (Other Components Interaction). Service History and if any After Market Accessories have been installed.
STEP 2	Operate the system, road test if necessary. Verify the parameter of the incident. If the problem cannot be duplicated, refer to “Incident Simulation Tests”.	
STEP 3	Get the proper diagnosis materials together including: • Power Supply Routing • System Operation Descriptions • Applicable Service Manual Sections • Check for any Service Bulletins Identify where to begin diagnosis based upon your knowledge of the system operation and the customer comments.	
STEP 4	Inspect the system for mechanical binding, loose connectors or wiring damage. Determine which circuits and components are involved and diagnose using the Power Supply Routing and Harness Layouts.	
STEP 5	Repair or replace the incident circuit or component.	
STEP 6	Operate the system in all modes. Verify the system works properly under all conditions. Make sure you have not inadvertently created a new incident during your diagnosis or repair steps.	

INCIDENT SIMULATION TESTS

Introduction

Sometimes the symptom is not present when the vehicle is brought in for service. If possible, re-create the conditions present at the time of the incident. Doing so may help avoid a No Trouble Found Diagnosis. The following section illustrates ways to simulate the conditions/environment under which the owner experiences an electrical incident.

The section is broken into the six following topics:

- Vehicle vibration
- Heat sensitive
- Freezing
- Water intrusion
- Electrical load

• Cold or hot start up
Get a thorough description of the incident from the customer. It is important for simulating the conditions of the problem.

Vehicle Vibration
The problem may occur or become worse while driving on a rough road or when engine is vibrating (idle with A/C on). In such a case, you will want to check for a vibration related condition. Refer to the following illustration.

CONNECTORS & HARNESS
Determine which connectors and wiring harness would affect the electrical system you are inspecting. Gently shake each connector and harness while monitoring the system for the incident you are trying to duplicate. This test may indicate a loose or poor electrical connection.

HINT
Connectors can be exposed to moisture. It is possible to get a thin film of corrosion on the connector terminals. A visual inspection may not reveal this without disconnecting the connector. If the problem occurs intermittently, perhaps the problem is caused by corrosion. It is a good idea to disconnect, inspect and clean the terminals on related connectors in the system.

SENSORS & RELAYS
Gently apply a slight vibration to sensors and relays in the system you are inspecting.
This test may indicate a loose or poorly mounted sensor or relay.

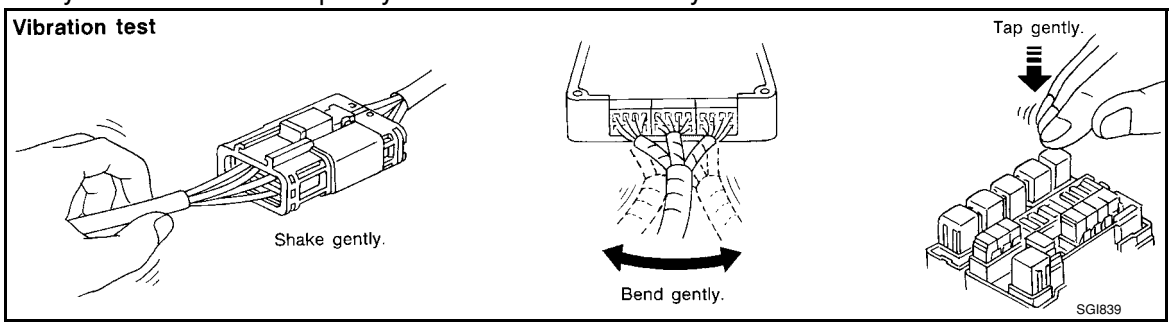

ENGINE COMPARTMENT
There are several reasons a vehicle or engine vibration could cause an electrical complaint. Some of the things to check for are:
• Connectors not fully seated.
• Wiring harness not long enough and is being stressed due to engine vibrations or rocking.
• Wires laying across brackets or moving components.
• Loose, dirty or corroded ground wires.
• Wires routed too close to hot components.
To inspect components under the hood, start by verifying the integrity of ground connections. (Refer to Ground Inspection described later.) First check that the system is properly grounded. Then check for loose connection by gently shaking the wiring or components as previously explained. Using the wiring diagrams inspect the wiring for continuity.

BEHIND THE INSTRUMENT PANEL
An improperly routed or improperly clamped harness can become pinched during accessory installation. Vehicle vibration can aggravate a harness which is routed along a bracket or near a screw.

UNDER SEATING AREAS
An unclamped or loose harness can cause wiring to be pinched by seat components (such as slide guides) during vehicle vibration. If the wiring runs under seating areas, inspect wire routing for possible damage or pinching.

Heat Sensitive

The customer's concern may occur during hot weather or after car has sat for a short time. In such cases you will want to check for a heat sensitive condition.
To determine if an electrical component is heat sensitive, heat the component with a heat gun or equivalent.
Do not heat components above 60°C (140°F). If incident occurs while heating the unit, either replace or properly insulate the component.

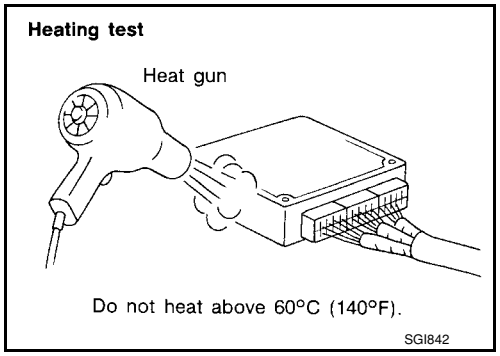

Freezing
The customer may indicate the incident goes away after the car warms up (winter time). The cause could be related to water freezing somewhere in the wiring/electrical system.
There are two methods to check for this. The first is to arrange for the owner to leave his car overnight. Make sure it will get cold enough to demonstrate his complaint. Leave the car parked outside overnight. In the morning, do a quick and thorough diagnosis of those electrical components which could be affected.
The second method is to put the suspect component into a freezer long enough for any water to freeze. Reinstall the part into the car and check for the reoccurrence of the incident. If it occurs, repair or replace the component.

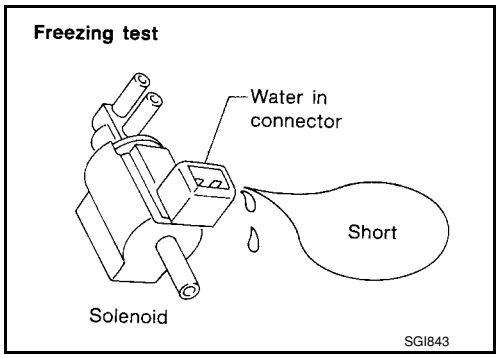

Water Intrusion
The incident may occur only during high humidity or in rainy/snowy weather. In such cases the incident could be caused by water intrusion on an electrical part. This can be simulated by soaking the car or running it through a car wash.
Do not spray water directly on any electrical components.

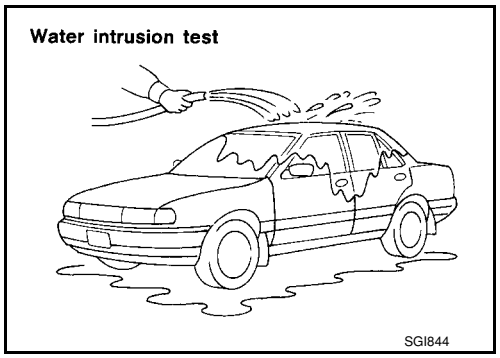

Electrical Load
The incident may be electrical load sensitive. Perform diagnosis with all accessories (including A/C, rear window defogger, radio, fog lamps) turned on.

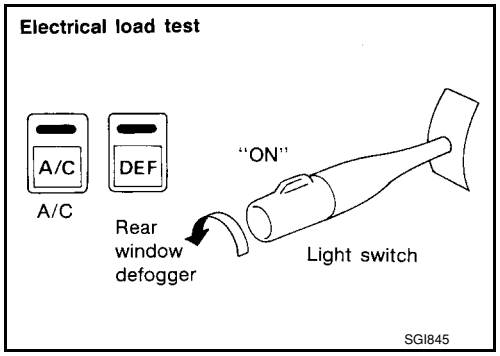

Cold or Hot Start Up
On some occasions an electrical incident may occur only when the car is started cold, or it may occur when the car is restarted hot shortly after being turned off. In these cases you may have to keep the car overnight to make a proper diagnosis.

CIRCUIT INSPECTION

Introduction
In general, testing electrical circuits is an easy task if it is approached in a logical and organized method. Before beginning it is important to have all available information on the system to be tested. Also, get a thor-

ough understanding of system operation. Then you will be able to use the appropriate equipment and follow the correct test procedure.
You may have to simulate vehicle vibrations while testing electrical components. Gently shake the wiring harness or electrical component to do this.

OPEN	A circuit is open when there is no continuity through a section of the circuit.	
SHORT	There are two types of shorts.	
	• SHORT CIRCUIT	When a circuit contacts another circuit and causes the normal resistance to change.
	• SHORT TO GROUND	When a circuit contacts a ground source and grounds the circuit.

NOTE:
Refer to “How to Check Terminal” to probe or check terminal.

Testing for “Opens” in the Circuit
Before you begin to diagnose and test the system, you should rough sketch a schematic of the system. This will help you to logically walk through the diagnosis process. Drawing the sketch will also reinforce your working knowledge of the system.

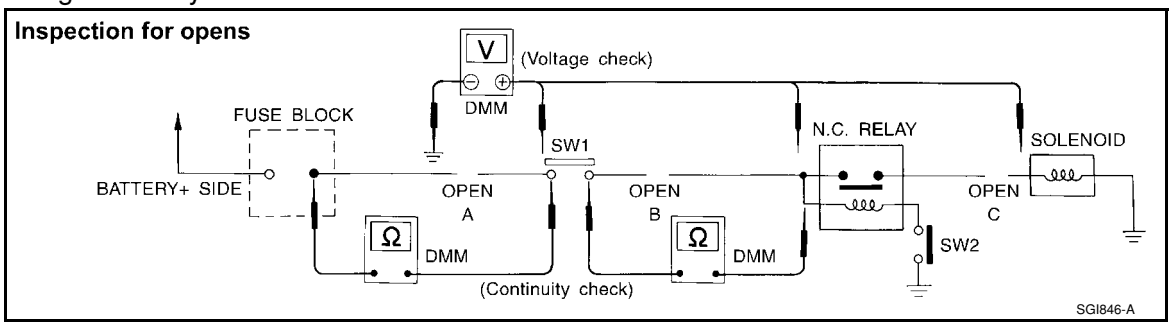

CONTINUITY CHECK METHOD
The continuity check is used to find an open in the circuit. The digital multimeter (DMM) set on the resistance function will indicate an open circuit as over limit (no beep tone or no ohms symbol). Make sure to always start with the DMM at the highest resistance level.
To help in understanding the diagnosis of open circuits, please refer to the previous schematic.
- Disconnect the battery negative cable.
- Start at one end of the circuit and work your way to the other end. (At the fuse block in this example)
- Connect one probe of the DMM to the fuse block terminal on the load side.
- Connect the other probe to the fuse block (power) side of SW1. Little or no resistance will indicate that portion of the circuit has good continuity. If there were an open in the circuit, the DMM would indicate an over limit or infinite resistance condition. (point A)
- Connect the probes between SW1 and the relay. Little or no resistance will indicate that portion of the circuit has good continuity. If there were an open in the circuit, the DMM would indicate an over limit or infinite resistance condition. (point B)
- Connect the probes between the relay and the solenoid. Little or no resistance will indicate that portion of the circuit has good continuity. If there were an open in the circuit, the DMM would indicate an over limit or infinite resistance condition. (point C)

Any circuit can be diagnosed using the approach in the previous example.

VOLTAGE CHECK METHOD
To help in understanding the diagnosis of open circuits please refer to the previous schematic.
In any powered circuit, an open can be found by methodically checking the system for the presence of voltage. This is done by switching the DMM to the voltage function.
- Connect one probe of the DMM to a known good ground.
- Begin probing at one end of the circuit and work your way to the other end.
- With SW1 open, probe at SW1 to check for voltage.
  voltage; open is further down the circuit than SW1.
  no voltage; open is between fuse block and SW1 (point A).
- Close SW1 and probe at relay.
  voltage; open is further down the circuit than the relay.
  no voltage; open is between SW1 and relay (point B).

- Close the relay and probe at the solenoid.
  voltage; open is further down the circuit than the solenoid.
  no voltage; open is between relay and solenoid (point C).

Any powered circuit can be diagnosed using the approach in the previous example.

Testing for “Shorts” in the Circuit

To simplify the discussion of shorts in the system, please refer to the following schematic.

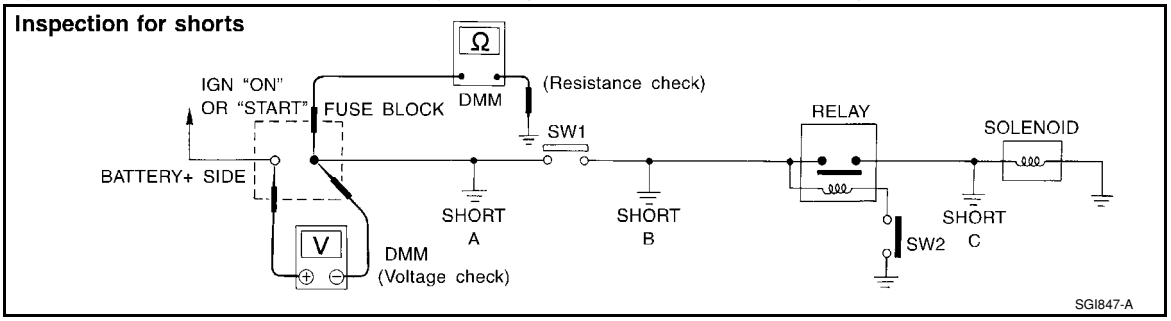

RESISTANCE CHECK METHOD

- Disconnect the battery negative cable and remove the blown fuse.
- Disconnect all loads (SW1 open, relay disconnected and solenoid disconnected) powered through the fuse.
- Connect one probe of the DMM to the load side of the fuse terminal. Connect the other probe to a known good ground.
- With SW1 open, check for continuity.
  continuity; short is between fuse terminal and SW1 (point A).
  no continuity; short is further down the circuit than SW1.
- Close SW1 and disconnect the relay. Put probes at the load side of fuse terminal and a known good ground. Then, check for continuity.
  continuity; short is between SW1 and the relay (point B).
  no continuity; short is further down the circuit than the relay.
- Close SW1 and jump the relay contacts with jumper wire. Put probes at the load side of fuse terminal and a known good ground. Then, check for continuity.
  continuity; short is between relay and solenoid (point C).
  no continuity; check solenoid, retrace steps.

VOLTAGE CHECK METHOD

- Remove the blown fuse and disconnect all loads (i.e. SW1 open, relay disconnected and solenoid disconnected) powered through the fuse.
- Turn the ignition key to the ON or START position. Verify battery voltage at the battery + side of the fuse terminal (one lead on the battery + terminal side of the fuse block and one lead on a known good ground).
- With SW1 open and the DMM leads across both fuse terminals, check for voltage.
  voltage; short is between fuse block and SW1 (point A).
  no voltage; short is further down the circuit than SW1.
- With SW1 closed, relay and solenoid disconnected and the DMM leads across both fuse terminals, check for voltage.
  voltage; short is between SW1 and the relay (point B).
  no voltage; short is further down the circuit than the relay.
- With SW1 closed, relay contacts jumped with fused jumper wire check for voltage.
  voltage; short is down the circuit of the relay or between the relay and the disconnected solenoid (point C).
  no voltage; retrace steps and check power to fuse block.

Ground Inspection

Ground connections are very important to the proper operation of electrical and electronic circuits. Ground connections are often exposed to moisture, dirt and other corrosive elements. The corrosion (rust) can become an unwanted resistance. This unwanted resistance can change the way a circuit works.

Electronically controlled circuits are very sensitive to proper grounding. A loose or corroded ground can drastically affect an electronically controlled circuit. A poor or corroded ground can easily affect the circuit. Even when the ground connection looks clean, there can be a thin film of rust on the surface.

When inspecting a ground connection follow these rules:

- Remove the ground bolt or screw.
- Inspect all mating surfaces for tarnish, dirt, rust, etc.

- Clean as required to assure good contact.
- Reinstall bolt or screw securely.
- Inspect for “add-on” accessories which may be interfering with the ground circuit.
- If several wires are crimped into one ground eyelet terminal, check for proper crimps. Make sure all of the wires are clean, securely fastened and providing a good ground path. If multiple wires are cased in one eyelet make sure no ground wires have excess wire insulation.

For detailed ground distribution information, refer to “Ground Distribution” in PG section.

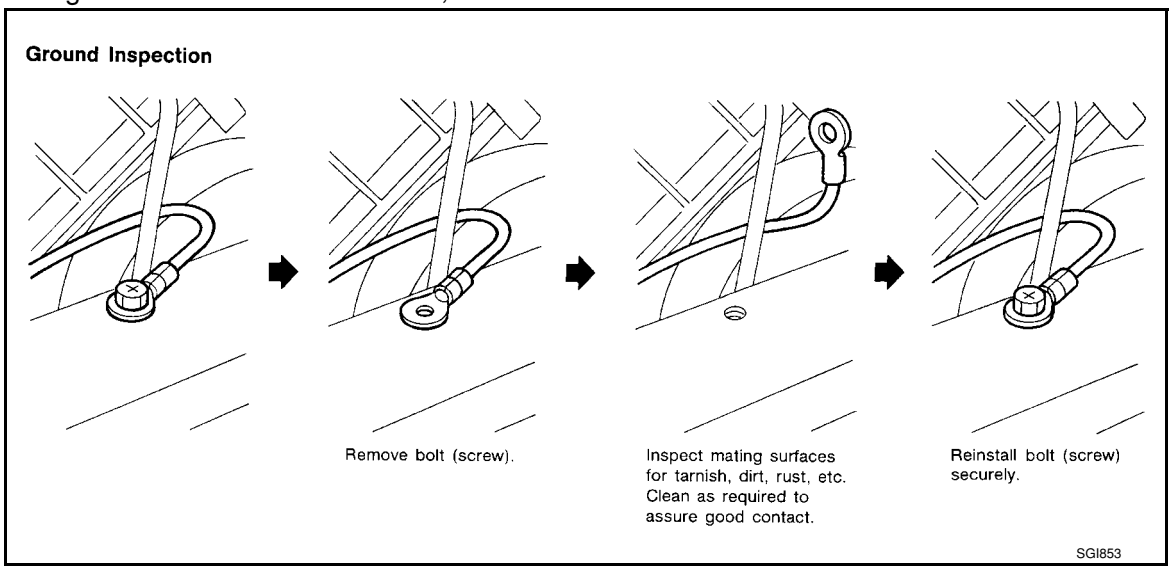

Voltage Drop Tests

Voltage drop tests are often used to find components or circuits which have excessive resistance. A voltage drop in a circuit is caused by a resistance when the circuit is in operation.

Check the wire in the illustration. When measuring resistance with DMM, contact by a single strand of wire will give reading of 0 ohms. This would indicate a good circuit. When the circuit operates, this single strand of wire is not able to carry the current. The single strand will have a high resistance to the current. This will be picked up as a slight voltage drop.

Unwanted resistance can be caused by many situations as follows:

- Undersized wiring (single strand example)
- Corrosion on switch contacts
- Loose wire connections or splices.

If repairs are needed always use wire that is of the same or larger gauge.

MEASURING VOLTAGE DROP — ACCUMULATED METHOD

- Connect the DMM across the connector or part of the circuit you want to check. The positive lead of the DMM should be closer to power and the negative lead closer to ground.
- Operate the circuit.
- The DMM will indicate how many volts are being used to “push” current through that part of the circuit.

Note in the illustration that there is an excessive 4.1 volt drop between the battery and the bulb.

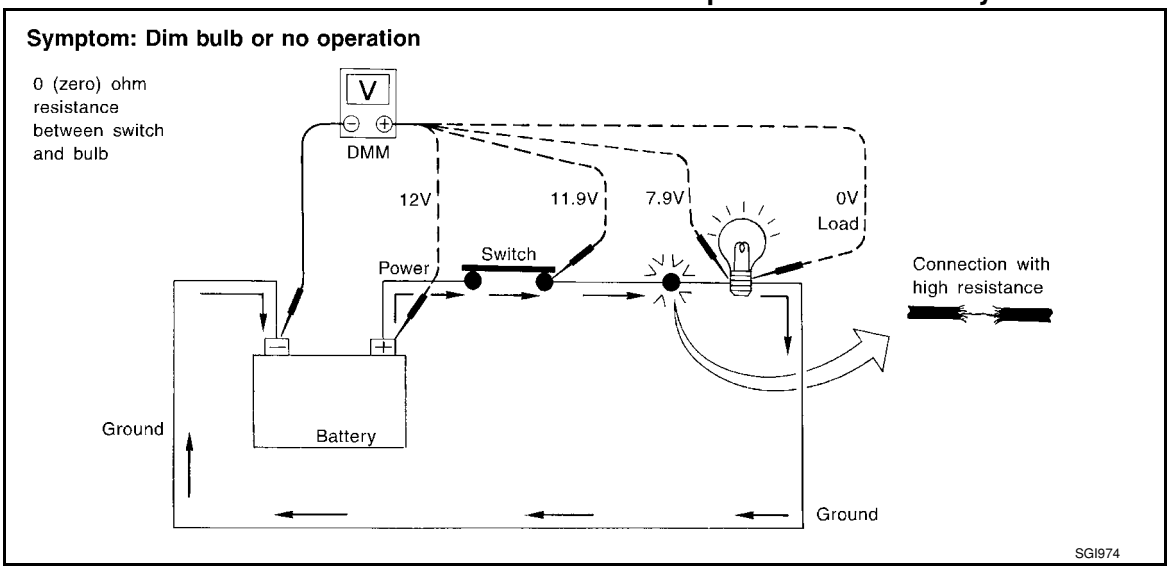

MEASURING VOLTAGE DROP — STEP-BY-STEP

The step-by-step method is most useful for isolating excessive drops in low voltage systems (such as those in “Computer Controlled Systems”).
Circuits in the “Computer Controlled System” operate on very low amperage.
The (Computer Controlled) system operations can be adversely affected by any variation in resistance in the system. Such resistance variation may be caused by poor connection, improper installation, improper wire gauge or corrosion.
The step by step voltage drop test can identify a component or wire with too much resistance.

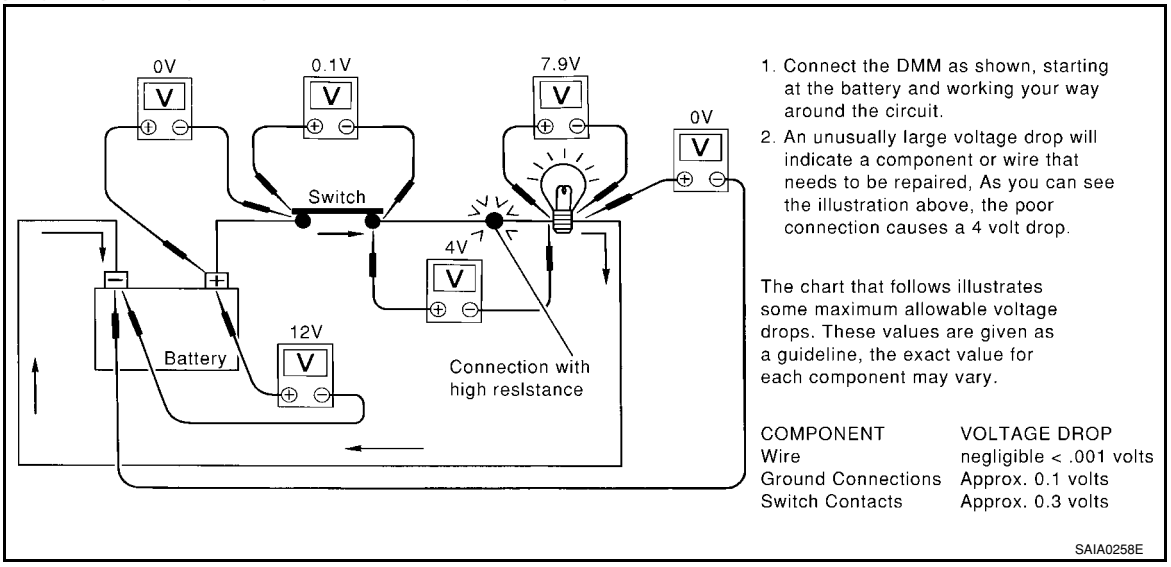

Control Unit Circuit Test

System Description:When the switch is ON, the control unit lights up the lamp.

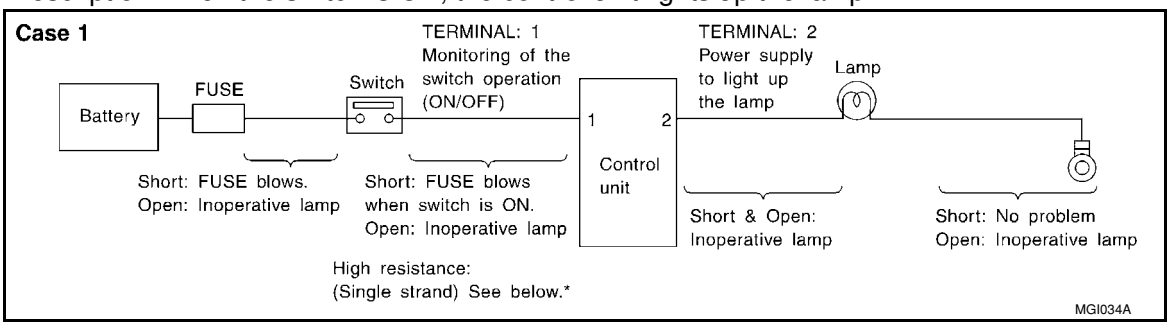

INPUT-OUTPUT VOLTAGE CHART

Pin No.	Item	Condition	Voltage value [V]	In case of high resistance such as single strand [V] *
1	Switch	Switch ON	Battery voltage	Lower than battery voltage Approx. 8 (Example)
		Switch OFF	Approx. 0	Approx. 0
2	Lamp	Switch ON	Battery voltage	Approx. 0 (Inoperative lamp)
		Switch OFF	Approx. 0	Approx. 0

The voltage value is based on the body ground.

*:If high resistance exists in the switch side circuit (caused by a single strand), terminal 1 does not detect battery voltage. Control unit does not detect the switch is ON even if the switch does not turn ON. Therefore, the control unit does not supply power to light up the lamp.

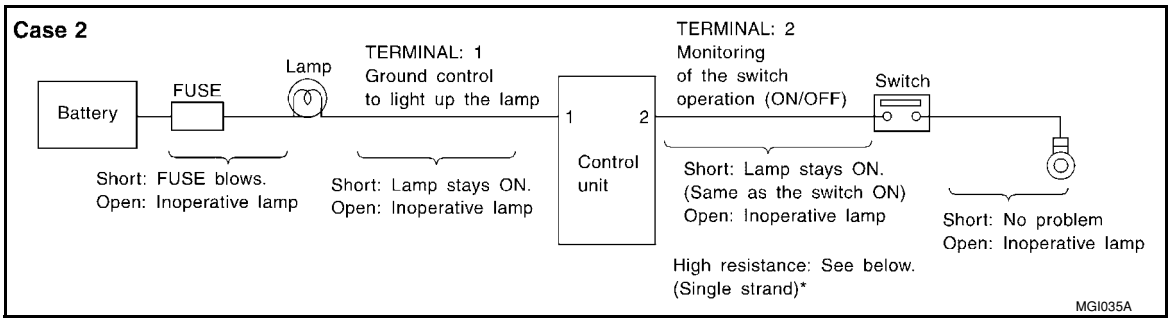

INPUT-OUTPUT VOLTAGE CHART

Pin No.	Item	Condition	Voltage value [V]	In case of high resistance such as single strand [V] *
1	Lamp	Switch ON	Approx. 0	Battery voltage (Inoperative lamp)
		Switch OFF	Battery voltage	Battery voltage
2	Switch	Switch ON	Approx. 0	Higher than 0 Approx. 4 (Example)
		Switch OFF	Approx. 5	Approx. 5

The voltage value is based on the body ground.

*:If high resistance exists in the switch side circuit (caused by a single strand), terminal 2 does not detect approx. 0V. Control unit does not detect the switch is ON even if the switch does not turn ON. Therefore, the control unit does not control ground to light up the lamp.

Control Units and Electrical Parts

INFOID:0000000001702442

PRECAUTIONS

- Never reverse polarity of battery terminals.
- Install only parts specified for a vehicle.
- Before replacing the control unit, check the input and output and functions of the component parts.
- Do not apply excessive force when disconnecting a connector.
- If a connector is installed by tightening bolts, loosen bolt mounting it, then take it out by hand.

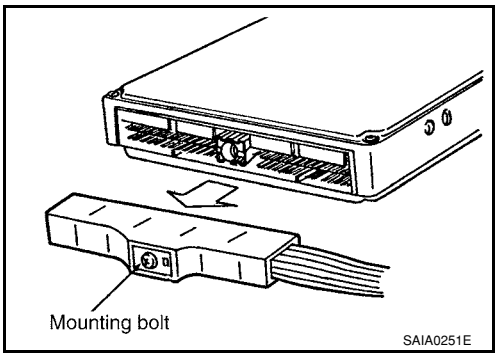

- Before installing a connector, make sure the terminal is not bent or damaged, and then correctly connect it.
  When installing a connector by tightening bolts, fix it by tightening the mounting bolt until the painted projection of the connector becomes even with the surface.

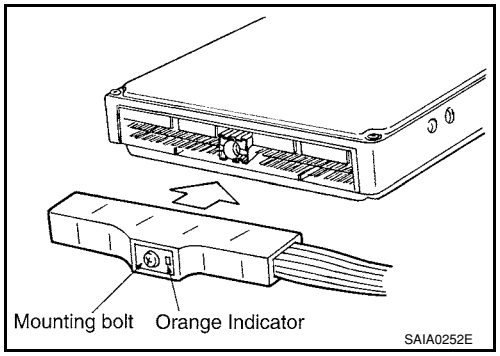

- For removal of the lever type connector, pull the lever up to the direction pointed to by the arrow A in the figure, and then remove the connector.

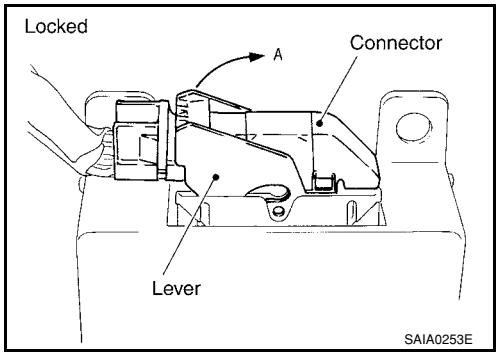

- For installation of the lever type connector, pull down the lever to the direction pointed by the arrow B in the figure, and then push the connector until a clicking noise is heard.

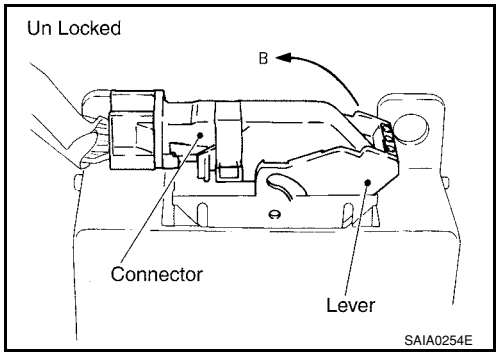

- Do not apply excessive shock to the control unit by dropping or hitting it.
- Be careful to prevent condensation in the control unit due to rapid temperature changes and do not let water or rain get on it. If water is found in the control unit, dry it fully and then install it in the vehicle.
- Be careful not to let oil to get on the control unit connector.
- Avoid cleaning the control unit with volatile oil.
- Do not disassemble the control unit, and do not remove the upper and lower covers.

- When using a DMM, be careful not to let test probes get close to each other to prevent the power transistor in the control unit from damaging battery voltage because of short circuiting.
- When checking input and output signals of the control unit, use the specified check adapter.

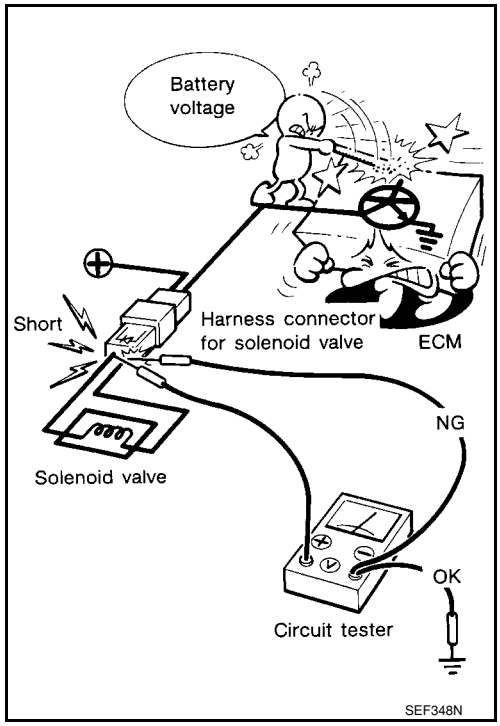

CONSULT-III CHECKING SYSTEM

Description

INFOID:0000000001806209

- CONSULT-III is a hand-held type tester. When it is connected with a diagnostic connector equipped on the vehicle side, it will communicate with the control unit equipped in the vehicle and then enable various kinds of diagnostic tests.
- Refer to CONSULT-III Operator's Manual for more information.

Function and System Application

INFOID:0000000001806219

Diagnostic test mode	Function	ENGINE	ABS*1	AIR BAG	EPS	IPDM E/R	BCM	METER/M&A	INTELLIGENT KEY*1	A/T*1	TRANSMISSION*2	NVIS (NATS)*3	NVIS (NATS BCM OR S/ENT)*3	NATS I-KEY*3,5
Work support	This mode enables a technician to adjust some devices faster and more accurately by following indications on CONSULT-III.	x	-	-	-	-	x	-	x	x	x	-	-	x
Self-diagnostic results	Self-diagnostic results can be read and erased quickly.	x	x	x	x	x	x	x	x	x	x	x	-	x
Trouble diagnostic record	Current self-diagnostic results and all trouble diagnostic records previously stored can be read.	-	-	x	-	-	-	-	-	-	-	-	-	-
Data monitor	Input/Output data in the ECU can be read.	x	x	-	x	x	-	x	x	x	x	-	-	-
CAN diagnostic support monitor	The communication condition of CAN communication line can be read.	x	x	-	x	x	x	x	x	x	x	-	-	-
Calibration data*2	Shows unit calibration IDs, offsets and gains. This data is stored in the ECU memory.	-	-	-	-	-	-	-	-	-	x	-	-	-
Active test	Diagnostic Test Mode in which CONSULT-III drives actuators apart from ECU shifting some parameters in a specified range.	x	x	-	-	x	-	-	x	-	-	-	-	-
Function test	This mode can show results of self-diagnosis of ECU with either "OK" or "NG". For engines, more practical tests regarding sensors/switches and/or actuators are available.	x	x	x	-	-	-	-	-	x	x	-	-	-
DTC & SRT confirmation	The results of SRT (System Readiness Test) and the self-diagnosis status/result can be confirmed.	x	-	-	-	-	-	-	-	-	-	-	-	-
DTC work support	The operating condition to confirm Diagnosis Trouble Codes can be selected.	x	-	-	-	-	-	-	-	x	-	-	-	-
ECM/ECU part number	ECM/ECU part number can be read.	x	x	-	x	-	x	-	x	x	x	-	-	-
ECU discriminated No.	Classification number of a replacement ECU can be read to prevent an incorrect ECU from being installed.	-	-	x	-	-	-	-	-	-	-	-	-	-
Passenger airbag	Displays the STATUS (readiness) of front passenger air bag.	-	-	x	-	-	-	-	-	-	-	-	-	-
Configuration	Sets control module parameters to match vehicle options.	-	-	-	-	-	x	-	-	-	-	-	-	-
Steering lock release*4,5	Condition of steering lock release solenoid.	-	-	-	-	-	-	-	-	-	-	-	x	-
Control unit initialization*4,6	All registered ignition key IDs in NATS components can be initialized and new IDs can be registered.	-	-	-	-	-	-	-	-	-	-	x	-	-
PIN Read*4	This mode enables technician to get BCM-specific 5-digit code.	-	-	-	-	-	-	-	-	-	-	-	x	-

x: Applicable.

*1: If equipped.

*2: This option is shown on vehicles equipped with continuously variable transmission (CVT).

*3: NVIS (NATS) [NISSAN Vehicle Immobilizer System (Nissan Anti-theft System)].

*4: This system is shown with NVIS (NATS) using program card AEN06B or later.

*5: With Intelligent Key System.

*6: Without Intelligent Key System.

CONSULT-III Data Link Connector (DLC) Circuit

INFOID:0000000001806211

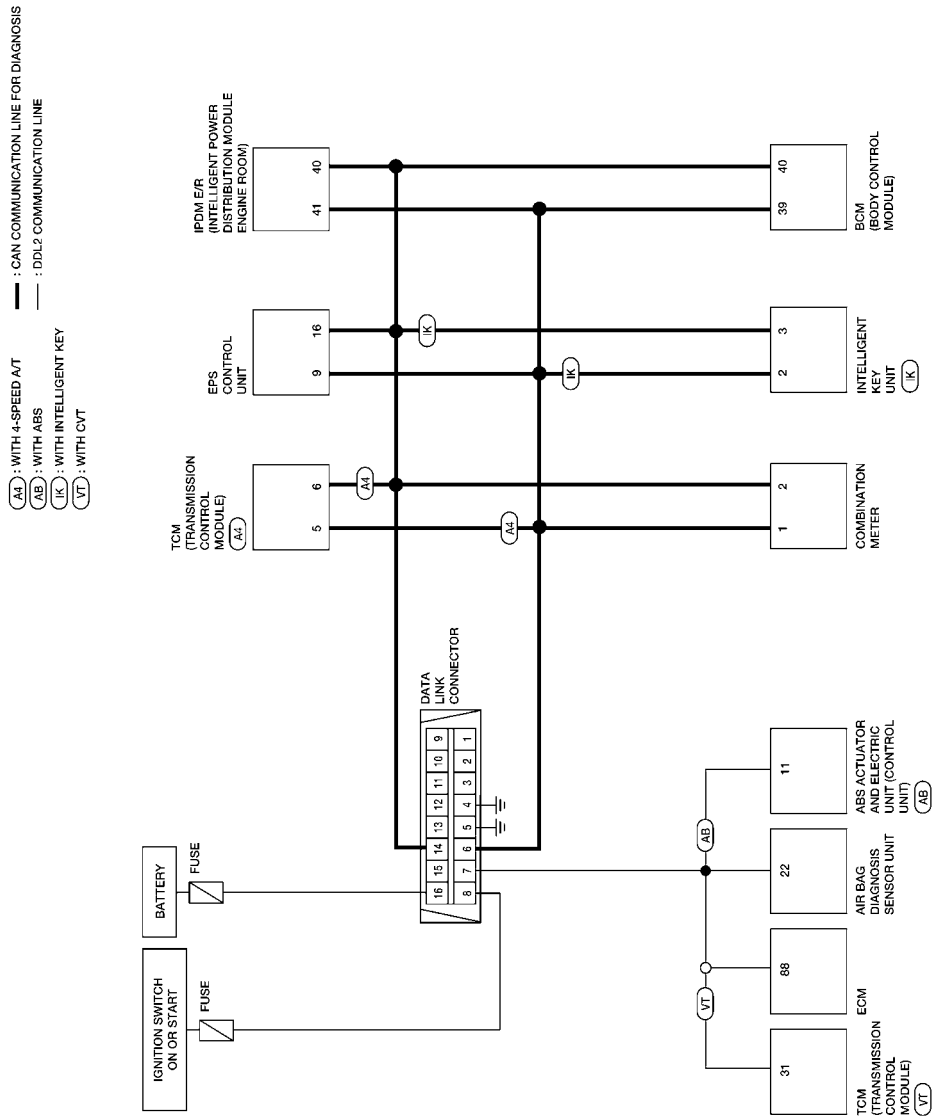

WAWA0009E

INSPECTION PROCEDURE

If the CONSULT-III cannot diagnose the system properly, check the following items.

Symptom	Check item
CONSULT-III cannot access any system.	• CONSULT-III DLC power supply circuit (Terminal 8) and ground circuit (Terminal 4). For detailed circuit, refer to LAN-28, "Wiring Diagram - CAN -".
CONSULT-III cannot access individual system. (Other systems can be accessed.)	• Power supply and ground circuit for the control unit of the system (For detailed circuit, refer to wiring diagram for each system). • Open or short circuit between the system and CONSULT-III DLC (For detailed circuit, refer to wiring diagram for each system). • Open or short circuit CAN communication line. Refer to LAN-28, "Wiring Diagram - CAN -" .

NOTE:
The DDL1 and DDL2 circuits from DLC pins 6, 7 and 14 may be connected to more than one system. A short in a DDL circuit connected to a control unit in one system may affect CONSULT-III access to other systems.

LIFTING POINT

Special Service Tool

INFOID:0000000001702449

Tool number Tool name	Description
LM4086-0200 Board on attachment	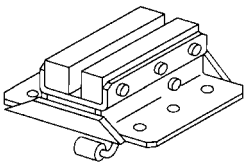 S-NT001
LM4519-0000 Safety stand attachment	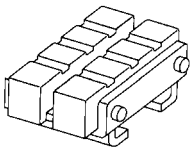 S-NT002

CAUTION:

- **Every time the vehicle is lifted up, maintain the complete vehicle curb condition.**
- **Since the vehicle's center of gravity changes when removing main parts on the front side (engine, transmission, suspension etc.), support a jack up point on the rear side garage jack with a mission jack or equivalent.**
- **Since the vehicle's center of gravity changes when removing main parts on the rear side (rear axle, suspension, etc.), support a jack up point on the front side garage jack with a mission jack or equivalent.**
- **Be careful not to smash or do not do anything that would affect piping parts.**

Garage Jack and Safety Stand and 2-Pole Lift

INFOID:0000000001702450

WARNING:

- **Park the vehicle on a level surface when using the jack. Make sure to avoid damaging pipes, tubes, etc. under the vehicle.**
- **Never get under the vehicle while it is supported only by the jack. Always use safety stands when you have to get under the vehicle.**
- **Place wheel chocks at both front and back of the wheels on the ground.**
- **When lifting the vehicle, open the lift arms as wide as possible and ensure that the front and rear of the vehicle are well balanced.**
- **When setting the lift arm, do not allow the arm to contact the brake tubes, brake cable, fuel lines and sill spoiler.**

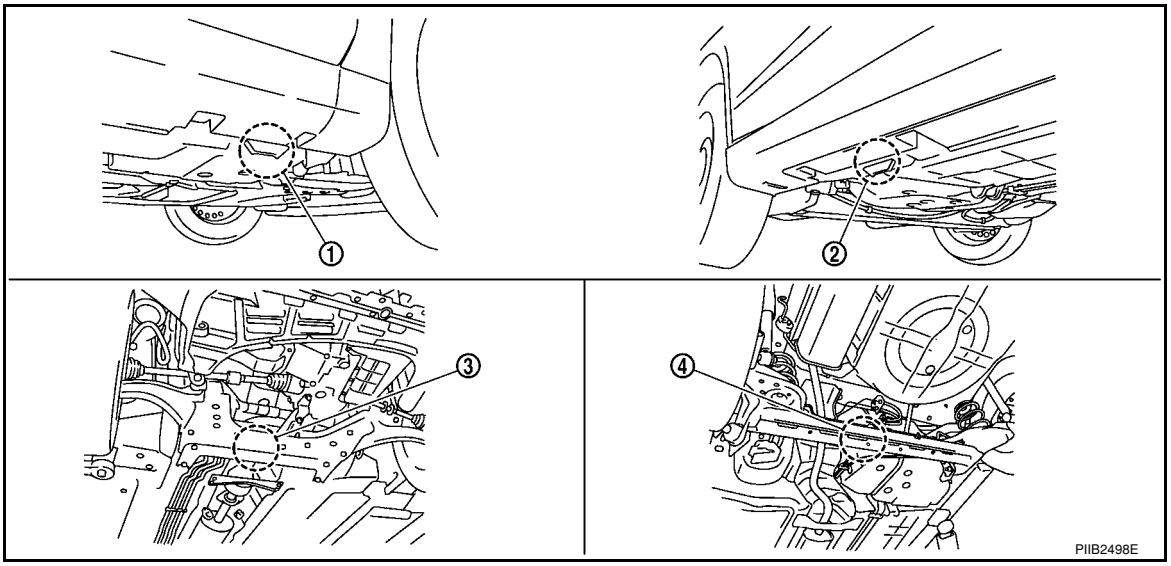

1. Safety stand point and lift up point (front)
2. Safety stand point and lift up point (rear)
3. Garage jack point (front)
4. Garage jack point (rear)

CAUTION:
There is canister just behind Garage jack point rear. Jack up be carefully.

Board-On Lift

INFOID:0000000001702451

CAUTION:
Make sure vehicle is empty when lifting.

- **The board-on lift attachment (LM4086-0200) set at front end of vehicle should be set on the front of the sill under the front door opening.**
- **Position attachments at front and rear ends of board-on lift.**

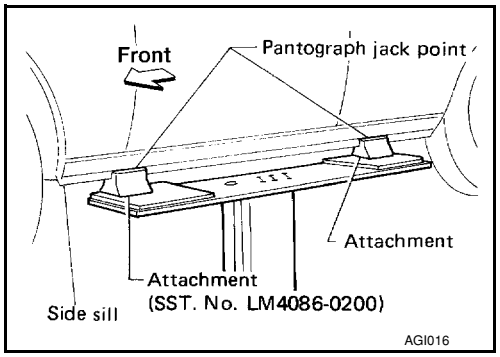

TOW TRUCK TOWING

Tow Truck Towing

INFOID:0000000001702452

CAUTION:
- **All applicable local laws regarding the towing operation must be obeyed.**
- **It is necessary to use proper towing equipment to avoid possible damage to the vehicle during towing operation. Towing is in accordance with Towing Procedure Manual at dealer.**
- **Always attach safety chains before towing.**
- **When towing, make sure that the transmission, steering system and power train are in good order. If any unit is damaged, dollies must be used.**

NISSAN recommends that the vehicle be towed with the driving (front) wheels off the ground as illustrated.

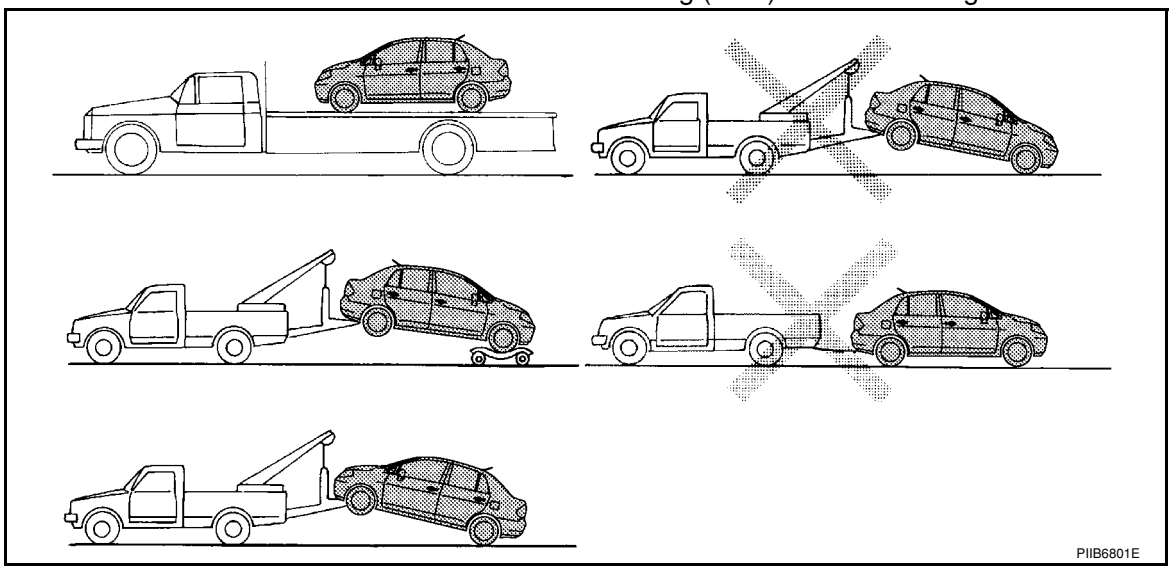

TOWING AN AUTOMATIC TRANSAXLE MODEL WITH FOUR WHEELS ON GROUND

CAUTION:

Never tow an automatic transaxle model with four wheels on the ground as this may cause serious and expensive damage to the transaxle.

Vehicle Recovery (Freeing a Stuck Vehicle)

INFOID:0000000001702453

- Tow chains or cables must be attached only to the main structural members of the vehicle.
- Pulling devices should be routed so they do not touch any part of the suspension, steering, brake or cooling systems.
- Always pull the cable straight out from the front or rear of the vehicle. Never pull on the vehicle at an angle.
- Pulling devices such as ropes or canvas straps are not recommended for use in vehicle towing or recovery.

WARNING:
- **Do not spin the tires at high speed. This could cause them to explode and result in serious injury. Parts of the vehicle could also overheat and be damaged.**
- **Install removable recovery hook securely using wheel nut wrench.**

TIGHTENING TORQUE OF STANDARD BOLTS

Tightening Torque Table

INFOID:0000000001702454

Grade	Bolt size	Bolt diameter * mm	Pitch mm	Tightening torque (Without lubricant)							
				Hexagon head bolt				Hexagon flange bolt			
				N·m	kg-m	ft-lb	in-lb	N·m	kg-m	ft-lb	in-lb
4T	M6	6.0	1.0	5.5	0.56	4	49	7	0.71	5	62
	M8	8.0	1.25	13.5	1.4	10	—	17	1.7	13	—
			1.0	13.5	1.4	10	—	17	1.7	13	—
	M10	10.0	1.5	28	2.9	21	—	35	3.6	26	—
			1.25	28	2.9	21	—	35	3.6	26	—
	M12	12.0	1.75	45	4.6	33	—	55	5.6	41	—
			1.25	45	4.6	33	—	65	6.6	48	—
	M14	14.0	1.5	80	8.2	59	—	100	10	74	—
7T	M6	6.0	1.0	9	0.92	7	80	11	1.1	8	97
	M8	8.0	1.25	22	2.2	16	—	28	2.9	21	—
			1.0	22	2.2	16	—	28	2.9	21	—
	M10	10.0	1.5	45	4.6	33	—	55	5.6	41	—
			1.25	45	4.6	33	—	55	5.6	41	—
	M12	12.0	1.75	80	8.2	59	—	100	10	74	—
			1.25	80	8.2	59	—	100	10	74	—
	M14	14.0	1.5	130	13	96	—	170	17	125	—
9T	M6	6.0	1.0	11	1.1	8	—	13.5	1.4	10	—
	M8	8.0	1.25	28	2.9	21	—	35	3.6	26	—
			1.0	28	2.9	21	—	35	3.6	26	—
	M10	10.0	1.5	55	5.6	41	—	80	8.2	59	—
			1.25	55	5.6	41	—	80	8.2	59	—
	M12	12.0	1.75	100	10	74	—	130	13	96	—
			1.25	100	10	74	—	130	13	96	—
	M14	14.0	1.5	170	17	125	—	210	21	155	—

*: Nominal diameter

1. **Special parts are excluded.**
2. **This standard is applicable to bolts having the following marks embossed on the bolt head.**

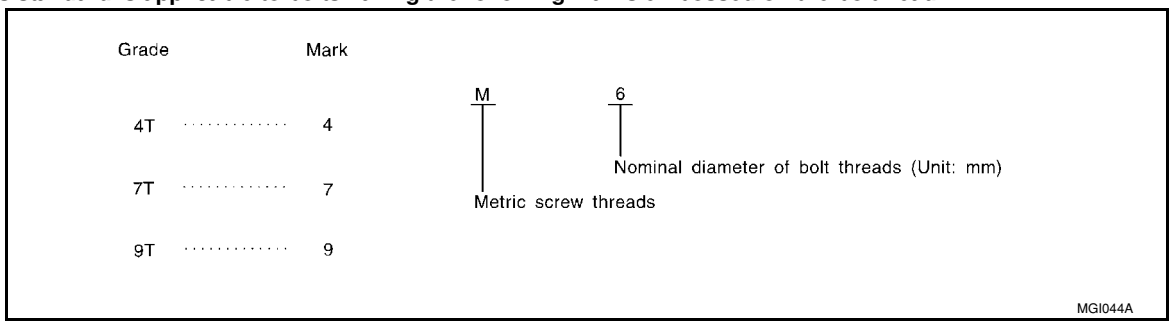

RECOMMENDED CHEMICAL PRODUCTS AND SEALANTS

Recommended Chemical Product and Sealant

INFOID:0000000001702455

Refer to the following chart for help in selecting the appropriate chemical product or sealant.

	Product Description	Purpose	Nissan North America Part No. (USA)	Nissan Canada Part No. (Canada)	Aftermarket Cross-reference Part Nos.
1	Rear View Mirror Adhesive	Used to permanently re-mount rear view mirrors to windows.	999MP-AM000P	99998-50505	Permatex 81844
2	Anaerobic Liquid Gasket	For metal-to-metal flange sealing. Can fill a 0.38 mm (0.015 inch) gap and provide instant sealing for most powertrain applications.	999MP-AM001P	99998-50503	Permatex 51813 and 51817
3	High Performance Thread Sealant	Provides instant sealing on any threaded straight or parallel threaded fitting. (Thread sealant only, no locking ability.) • Do not use on plastic.	999MP-AM002P	999MP-AM002P	Permatex 56521
4	Silicone RTV	Gasket Maker	999MP-AM003P (Ultra Grey)	99998-50506 (Ultra Grey)	Permatex Ultra Grey 82194; Three Bond 1207,1215, 1216, 1217F, 1217G and 1217H Nissan RTV Part No. 999MP-A7007
		Gasket Maker for Maxima/ Quest 5-speed automatic transmission (RE5F22A)	–	–	Three Bond 1281B or exact equivalent in its quality
5	High Temperature, High Strength Thread Locking Sealant (Red)	Threadlocker	999MP-AM004P	999MP-AM004P	Permatex 27200; Three Bond 1360, 1360N, 1305 N&P, 1307N, 1335, 1335B, 1363B, 1377C, 1386B, D&E and 1388 Loctite 648
6	Medium Strength Thread Locking Sealant (Blue)	Threadlocker (service tool removable)	999MP-AM005P	999MP-AM005P	Permatex 24200, 24206, 24240, 24283 and 09178; Three Bond 1322, 1322N, 1324 D&N, 1333D, 1361C, 1364D, 1370C and 1374

IDENTIFICATION INFORMATION

Model Variation

INFOID:0000000001702456

Body	Engine	Transmission	Grade	Destination	
				USA	Canada
Hatchback	MR18DE	6 M/T	S	FDSALDY-EUA	FDSALDY-ENA
		4 A/T		FDSALDA-EUA	FDSALDA-ENA
		6 M/T	SL	FDSALGY-EUA	FDSALGY-ENA
		CVT		FDSALGZ-EUA	FDSALGZ-ENA
Sedan		6 M/T	S	BDSALDY-EUA	BDSALDY-ENA
		4 A/T		BDSALDA-EUA	BDSALDA-ENA
		6 M/T	SL	BDSALGY-EUA	BDSALGY-ENA
		CVT		BDSALGZ-EUA	—

Model code designations:

Position (Left to Right)	Character	Qualifier	Definition
1	F	Body type	F: Hatchback B: Sedan
2	DS	Engine	DS: MR18DE
3			
4	A	Axle	A: 2WD model
5	L	Handle	L: LH drive
6	D	Grade	D: 1.8 S LEV2-ULEV (USA), 1.8 S (CANADA) G: 1.8 SL LEV2-ULEV (USA), 1.8 SL (CANADA)
7	Y	Transmission	Y: 6 M/T A: 4 A/T Z: CVT
8	C11	Model	C11: Versa
9			
10			
11	E	Intake	E: EGI
12	U	Zone	N: Canada V: California U: USA
13	A	Equipment	A: Standard
14	xxxxx	Option Codes	
15			
16			
17			

IDENTIFICATION NUMBER

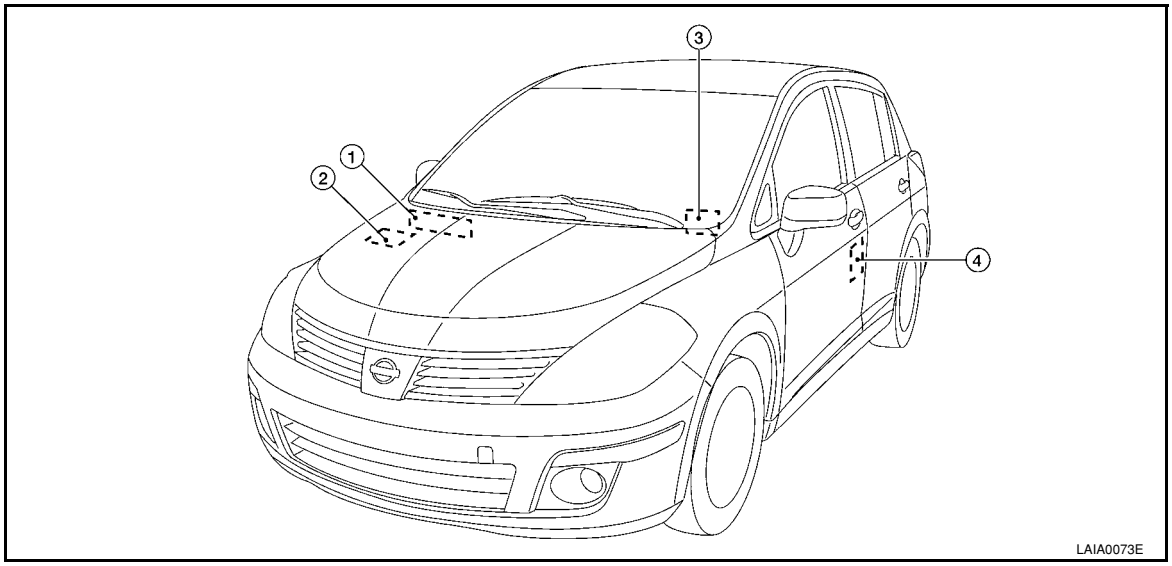

1. Chassis number
2. Emissions control label
3. VIN number
4. FMVSS/CMVSS certification and tire placard labels

VEHICLE IDENTIFICATION NUMBER ARRANGEMENT

VIN Position (Left to Right)	Character	Qualifier	Definition
1	3N1	Country code and vehicle manufacturer	3N1: Mexico
2			
3			
4	B	Engine	B: MR18DE
5	C	Vehicle type	C: NISSAN Versa
6	1	Model change	0 to 9
7	3	Body type	1: 4-door sedan
			3: 4-door hatchback
8	E	Restraint system	A: Driver and front passenger SRS air bag, SRS side air bags and 3 point manual seat belts E: Driver and front passenger SRS air bag, SRS side air bags, SRS side curtain air bags and 3 point manual seat belts
9	*	Check digit	0 to 9 or X
10	8	Model year	8: 2008 Model year
11	L	Manufacturing Plant	L: Aguascalientes, Mexico
12	XXXXXX	Vehicle serial number	Chassis number
13			
14			
15			
16			
17			

IDENTIFICATION PLATE

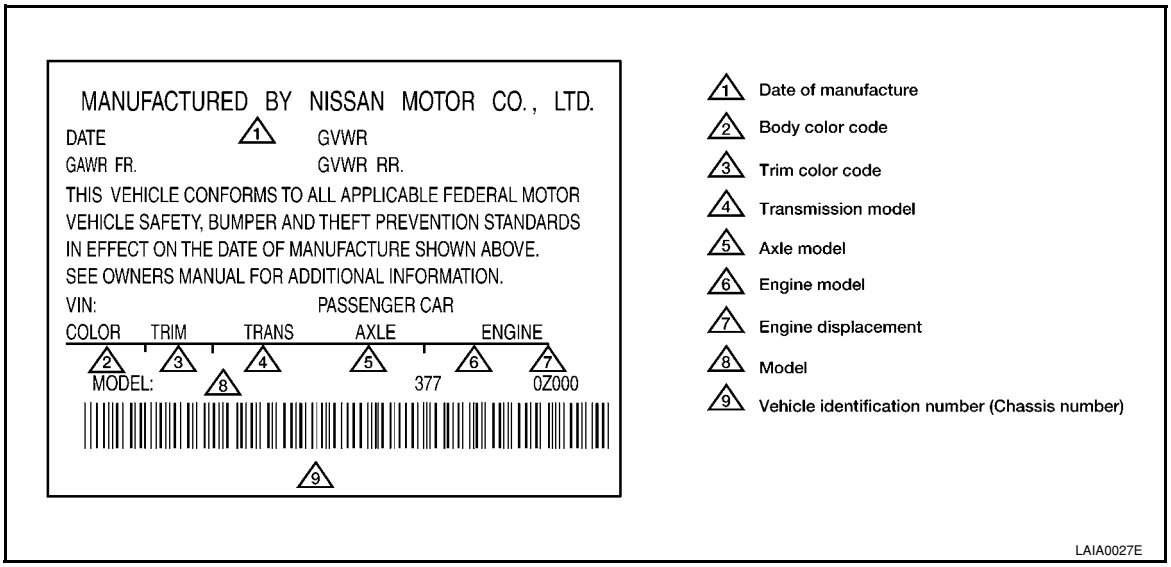

ENGINE SERIAL NUMBER

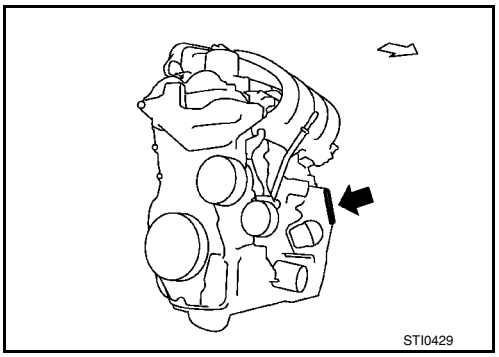

AUTOMATIC TRANSAXLE NUMBER

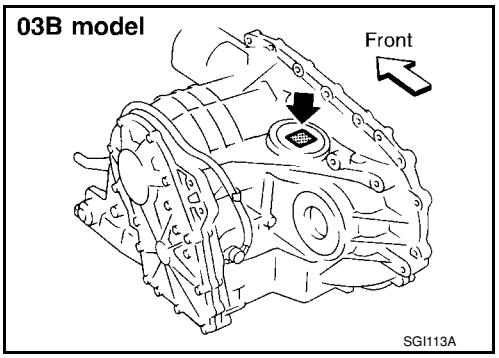

MANUAL TRANSAXLE NUMBER

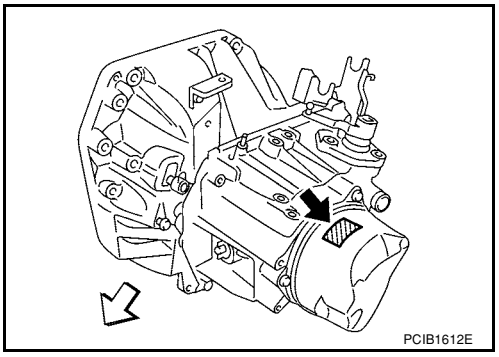

CVT NUMBER

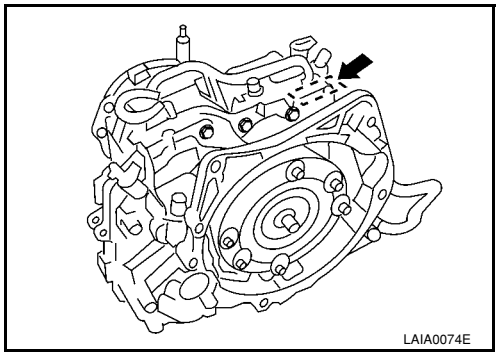

Dimensions

INFOID:0000000001702457

Unit: mm (in)

Overall length	Hatchback: 4,295 (169.1) Sedan: 4470 (176)
Overall width	1,694.2 (66.7)
Overall height	1,534.1 (60.4)
Front tread	1,480 (58.3)
Rear tread	1,485 (58.5)
Wheelbase	2,599.9 (102.4)

Wheels & Tires

INFOID:0000000001702458

Road wheel	
Size	15 x 5.5 JJ
Offset mm (in)	40 (1.57)
Tire size	
Conventional	185/65 R15
Spare	T125/70D15

TERMINOLOGY

SAE J1930 Terminology List

INFOID:0000000001702459

All emission related terms used in this publication in accordance with SAE J1930 are listed. Accordingly, new terms, new acronyms/abbreviations and old terms are listed in the following chart.

NEW TERM	NEW ACRONYM / ABBREVIATION	OLD TERM
Air cleaner	ACL	Air cleaner
Barometric pressure	BARO	***
Barometric pressure sensor-BCDD	BAROS-BCDD	BCDD
Camshaft position	CMP	***
Camshaft position sensor	CMPS	Crank angle sensor
Canister	***	Canister
Carburetor	CARB	Carburetor
Charge air cooler	CAC	Intercooler
Closed loop	CL	Closed loop
Closed throttle position switch	CTP switch	Idle switch
Clutch pedal position switch	CPP switch	Clutch switch
Continuous fuel injection system	CFI system	***
Continuous trap oxidizer system	CTOX system	***
Crankshaft position	CKP	***
Crankshaft position sensor	CKPS	***
Data link connector	DLC	***
Data link connector for CONSULT-III	DLC for CONSULT-III	Diagnostic connector for CONSULT-III
Diagnostic test mode	DTM	Diagnostic mode
Diagnostic test mode selector	DTM selector	Diagnostic mode selector
Diagnostic test mode I	DTM I	Mode I
Diagnostic test mode II	DTM II	Mode II
Diagnostic trouble code	DTC	Malfunction code
Direct fuel injection system	DFI system	***
Distributor ignition system	DI system	Ignition timing control
Early fuel evaporation-mixture heater	EFE-mixture heater	Mixture heater
Early fuel evaporation system	EFE system	Mixture heater control
Electrically erasable programmable read only memory	EEPROM	***
Electronic ignition system	EI system	Ignition timing control
Engine control	EC	***
Engine control module	ECM	ECCS control unit
Engine coolant temperature	ECT	Engine temperature
Engine coolant temperature sensor	ECTS	Engine temperature sensor
Engine modification	EM	***
Engine speed	RPM	Engine speed
Erasable programmable read only memory	EPROM	***
Evaporative emission canister	EVAP canister	Canister
Evaporative emission system	EVAP system	Canister control solenoid valve
Exhaust gas recirculation valve	EGR valve	EGR valve

NEW TERM	NEW ACRONYM / ABBREVIATION	OLD TERM
Exhaust gas recirculation control-BPT valve	EGRC-BPT valve	BPT valve
Exhaust gas recirculation control-solenoid valve	EGRC-solenoid valve	EGR control solenoid valve
Exhaust gas recirculation temperature sensor	EGRT sensor	Exhaust gas temperature sensor
EGR temperature sensor		
Flash electrically erasable programmable read only memory	FEEPROM	***
Flash erasable programmable read only memory	FEPROM	***
Flexible fuel sensor	FFS	***
Flexible fuel system	FF system	***
Fuel pressure regulator	***	Pressure regulator
Fuel pressure regulator control solenoid valve	***	PRVR control solenoid valve
Fuel trim	FT	***
Heated Oxygen sensor	HO2S	Exhaust gas sensor
Idle air control system	IAC system	Idle speed control
Idle air control valve-air regulator	IACV-air regulator	Air regulator
Idle air control valve-auxiliary air control valve	IACV-AAC valve	Auxiliary air control (AAC) valve
Idle air control valve-FICD solenoid valve	IACV-FICD solenoid valve	FICD solenoid valve
Idle air control valve-idle up control solenoid valve	IACV-idle up control solenoid valve	Idle up control solenoid valve
Idle speed control-FI pot	ISC-FI pot	FI pot
Idle speed control system	ISC system	***
Ignition control	IC	***
Ignition control module	ICM	***
Indirect fuel injection system	IFI system	***
Intake air	IA	Air
Intake air temperature sensor	IAT sensor	Air temperature sensor
Knock	***	Detonation
Knock sensor	KS	Detonation sensor
Malfunction indicator lamp	MIL	Check engine light
Manifold absolute pressure	MAP	***
Manifold absolute pressure sensor	MAPS	***
Manifold differential pressure	MDP	***
Manifold differential pressure sensor	MDPS	***
Manifold surface temperature	MST	***
Manifold surface temperature sensor	MSTS	***
Manifold vacuum zone	MVZ	***
Manifold vacuum zone sensor	MVZS	***
Mass air flow sensor	MAFS	Air flow meter
Mixture control solenoid valve	MC solenoid valve	Air-fuel ratio control solenoid valve
Multiport fuel injection System	MFI system	Fuel injection control

NEW TERM	NEW ACRONYM / ABBREVIATION	OLD TERM
Nonvolatile random access memory	NVRAM	***
On board diagnostic system	OBD system	Self-diagnosis
Open loop	OL	Open loop
Oxidation catalyst	OC	Catalyst
Oxidation catalytic converter system	OC system	***
Oxygen sensor	O2S	Exhaust gas sensor
Park position switch	***	Park switch
Park/neutral position switch	PNP switch	Park/neutral switch Inhibitor switch Neutral position switch
Periodic trap oxidizer system	PTOX system	***
Positive crankcase ventilation	PCV	Positive crankcase ventilation
Positive crankcase ventilation valve	PCV valve	PCV valve
Powertrain control module	PCM	***
Programmable read only memory	PROM	***
Pulsed secondary air injection control solenoid valve	PAIRC solenoid valve	AIV control solenoid valve
Pulsed secondary air injection system	PAIR system	Air induction valve (AIV) control
Pulsed secondary air injection valve	PAIR valve	Air induction valve
Random access memory	RAM	***
Read only memory	ROM	***
Scan tool	ST	***
Secondary air injection pump	AIR pump	***
Secondary air injection system	AIR system	***
Sequential multiport fuel injection system	SFI system	Sequential fuel injection
Service reminder indicator	SRI	***
Simultaneous multiport fuel injection system	***	Simultaneous fuel injection
Smoke puff limiter system	SPL system	***
Supercharger	SC	***
Supercharger bypass	SCB	***
System readiness test	SRT	***
Thermal vacuum valve	TVV	Thermal vacuum valve
Three way catalyst	TWC	Catalyst
Three way catalytic converter system	TWC system	***
Three way + oxidation catalyst	TWC + OC	Catalyst
Three way + oxidation catalytic converter system	TWC + OC system	***
Throttle body	TB	Throttle chamber SPI body
Throttle body fuel injection system	TBI system	Fuel injection control
Throttle position	TP	Throttle position
Throttle position sensor	TPS	Throttle sensor
Throttle position switch	TP switch	Throttle switch
Torque converter clutch solenoid valve	TCC solenoid valve	Lock-up cancel solenoid Lock-up solenoid

NEW TERM	NEW ACRONYM / ABBREVIATION	OLD TERM
Transmission control module	TCM	A/T control unit
Turbocharger	TC	Turbocharger
Vehicle speed sensor	VSS	Vehicle speed sensor
Volume air flow sensor	VAFS	Air flow meter
Warm up oxidation catalyst	WU-OC	Catalyst
Warm up oxidation catalytic converter system	WU-OC system	***
Warm up three way catalyst	WU-TWC	Catalyst
Warm up three way catalytic converter system	WU-TWC system	***
Wide open throttle position switch	WOTP switch	Full switch

***: Not applicable

SECTION GW

GLASSES, WINDOW SYSTEM & MIRRORS

CONTENTS

SERVICE INFORMATION 3

PRECAUTIONS 3
Precaution for Supplemental Restraint System (SRS) "AIR BAG" and "SEAT BELT PRE-TENSIONER" 3
Precaution for Procedure without Cowl Top Cover.....3
Handling for Adhesive and Primer 3

PREPARATION 4
Commercial Service Tool 4

SQUEAK AND RATTLE TROUBLE DIAGNOSES 5
Work Flow 5
Generic Squeak and Rattle Troubleshooting 7
Diagnostic Worksheet 9

WINDSHIELD GLASS 11
Removal and Installation 11

OPERA WINDOW GLASS 13
Removal and Installation 13

REAR WINDOW GLASS AND MOLDING 15
Removal and Installation 15

POWER WINDOW SYSTEM 18
Component Parts and Harness Connector Location 18
System Description 18
CAN Communication System Description 22
Schematic 22
Wiring Diagram - WINDOW- 23
Main Power Window and Door Lock/Unlock Switch Harness Connector Terminal Layout 26
Terminal and Reference Value for Main Power Window and Door Lock/Unlock Switch 27
Terminal and Reference Value for BCM 28
Work Flow 28
CONSULT-III Function (BCM) 28
Power Window Auto Operation Initialization 29
Trouble Diagnosis Symptom Chart 29
BCM Power Supply and Ground Circuit Inspection 30
Main Power Window and Door Lock/Unlock Switch Power Supply and Ground Circuit Inspection 30
Front Power Window Motor LH Circuit Inspection...31
Front Power Window RH Circuit Inspection (Power Window and Door Lock/Unlock Switch RH Operation) 32
Front Power Window Motor RH Circuit Inspection...32
Encoder Circuit Inspection 34
Door Switch Check 36
Rear Power Window LH Circuit Inspection (Rear Power Window Switch LH Operation) 37
Rear Power Window RH Circuit Inspection (Rear Power Window Switch RH Operation) 38
Rear Power Window Motor LH Circuit Inspection....38
Rear Power Window Motor RH Circuit Inspection...40

FRONT DOOR GLASS AND REGULATOR 42
Removal and Installation 42
Disassembly and Assembly 44
Inspection after Installation 44

REAR DOOR GLASS AND REGULATOR 46
Removal and Installation 46
Disassembly and Assembly 48
Inspection after Installation 48

REAR WINDOW DEFOGGER 49
Component Parts and Harness Connector Location 49
System Description 49
CAN Communication System Description 50
Wiring Diagram - DEF - 51
Terminal and Reference Value for BCM 52
Terminal and Reference Value for IPDM E/R 52
Work Flow 53
CONSULT-III Function (BCM) 53
Trouble Diagnosis Symptom Chart 53

BCM Power Supply and Ground Circuit Inspection ... 54
Rear Window Defogger Switch Circuit Inspection... 54
Rear Window Defogger Circuit Inspection 55
Door Mirror Defogger Circuit Inspection 58
Filament Check 59
Filament Repair 60

DOOR MIRROR 62
Wiring Diagram - MIRROR - 62
Removal and Installation 63
Disassembly and Assembly 63

INSIDE MIRROR 65
Removal and Installation 65

SERVICE INFORMATION

PRECAUTIONS

Precaution for Supplemental Restraint System (SRS) "AIR BAG" and "SEAT BELT PRE-TENSIONER"

INFOID:0000000001704128

The Supplemental Restraint System such as “AIR BAG” and “SEAT BELT PRE-TENSIONER”, used along with a front seat belt, helps to reduce the risk or severity of injury to the driver and front passenger for certain types of collision. This system includes seat belt switch inputs and dual stage front air bag modules. The SRS system uses the seat belt switches to determine the front air bag deployment, and may only deploy one front air bag, depending on the severity of a collision and whether the front occupants are belted or unbelted. Information necessary to service the system safely is included in the SRS and SB section of this Service Manual.

WARNING:

- **To avoid rendering the SRS inoperative, which could increase the risk of personal injury or death in the event of a collision which would result in air bag inflation, all maintenance must be performed by an authorized NISSAN/INFINITI dealer.**
- **Improper maintenance, including incorrect removal and installation of the SRS, can lead to personal injury caused by unintentional activation of the system. For removal of Spiral Cable and Air Bag Module, see the SRS section.**
- **Do not use electrical test equipment on any circuit related to the SRS unless instructed to in this Service Manual. SRS wiring harnesses can be identified by yellow and/or orange harnesses or harness connectors.**

Precaution for Procedure without Cowl Top Cover

INFOID:0000000001704129

When performing the procedure after removing cowl top cover, cover the lower end of windshield.

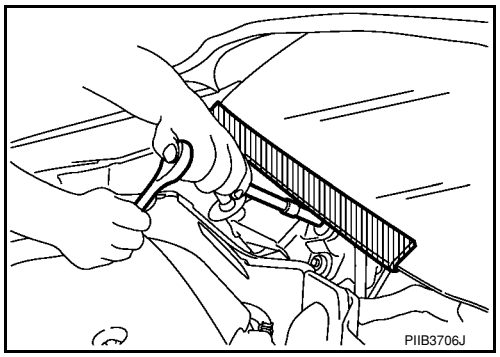

Handling for Adhesive and Primer

INFOID:0000000001704130

- Do not use an adhesive which is past its usable date. Shelf life of the adhesive is limited to six months after the date of manufacture. Carefully adhere to the expiration or manufacture date printed on the box.
- Keep primers and adhesive in a cool, dry place. Ideally, they should be stored in a refrigerator.
- Open the seal of the primer and adhesive just before application. Discard the remainder after application.
- Before application, be sure to shake the primer container to stir the contents. If any floating material is found, do not use it.
- If any primer or adhesive contacts the skin, wipe it off with gasoline or equivalent and wash the skin with soap.
- When using primer and adhesive, always observe the precautions in the instruction manual.

PREPARATION

Commercial Service Tool

INFOID:0000000001704131

Tool name		Description
Engine ear	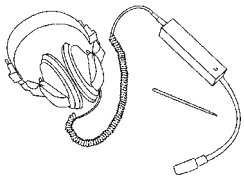 SIIA0995E	Locating the noise
Suction lifter	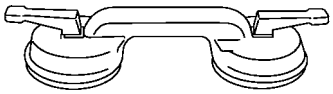 PIIB1805J	Holding of door glass

SQUEAK AND RATTLE TROUBLE DIAGNOSES

Work Flow

INFOID:0000000001704132

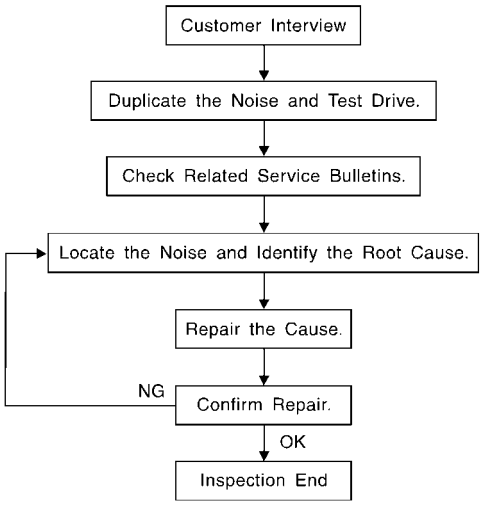

SBT842

CUSTOMER INTERVIEW

Interview the customer if possible, to determine the conditions that exist when the noise occurs. Use the Diagnostic Worksheet during the interview to document the facts and conditions when the noise occurs and any customer's comments; refer to GW-9, "Diagnostic Worksheet". This information is necessary to duplicate the conditions that exist when the noise occurs.

- The customer may not be able to provide a detailed description or the location of the noise. Attempt to obtain all the facts and conditions that exist when the noise occurs (or does not occur).
- If there is more than one noise in the vehicle, be sure to diagnose and repair the noise that the customer is concerned about. This can be accomplished by test driving the vehicle with the customer.
- After identifying the type of noise, isolate the noise in terms of its characteristics. The noise characteristics are provided so the customer, service adviser and technician are all speaking the same language when defining the noise.
- Squeak —(Like tennis shoes on a clean floor)
  Squeak characteristics include the light contact/fast movement/brought on by road conditions/hard surfaces = higher pitch noise/softer surfaces = lower pitch noises/edge to surface = chirping.
- Creak—(Like walking on an old wooden floor)
  Creak characteristics include firm contact/slow movement/twisting with a rotational movement/pitch dependent on materials/often brought on by activity.
- Rattle—(Like shaking a baby rattle)
  Rattle characteristics include the fast repeated contact/vibration or similar movement/loose parts/missing clip or fastener/incorrect clearance.
- Knock —(Like a knock on a door)
  Knock characteristics include hollow sounding/sometimes repeating/often brought on by driver action.
- Tick—(Like a clock second hand)
  Tick characteristics include gentle contacting of light materials/loose components/can be caused by driver action or road conditions.
- Thump—(Heavy, muffled knock noise)
  Thump characteristics include softer knock/dead sound often brought on by activity.
- Buzz—(Like a bumble bee)
  Buzz characteristics include high frequency rattle/firm contact.
- Often the degree of acceptable noise level will vary depending upon the person. A noise that you may judge as acceptable may be very irritating to the customer.
- Weather conditions, especially humidity and temperature, may have a great effect on noise level.

DUPLICATE THE NOISE AND TEST DRIVE

If possible, drive the vehicle with the customer until the noise is duplicated. Note any additional information on the Diagnostic Worksheet regarding the conditions or location of the noise. This information can be used to duplicate the same conditions when you confirm the repair.

If the noise can be duplicated easily during the test drive, to help identify the source of the noise, try to duplicate the noise with the vehicle stopped by doing one or all of the following:
1) Close a door.
2) Tap or push/pull around the area where the noise appears to be coming from.
3) Rev the engine.
4) Use a floor jack to recreate vehicle “twist”.
5) At idle, apply engine load (electrical load, half-clutch on M/T model, drive position on A/T model).
6) Raise the vehicle on a hoist and hit a tire with a rubber hammer.

- Drive the vehicle and attempt to duplicate the conditions the customer states exist when the noise occurs.
- If it is difficult to duplicate the noise, drive the vehicle slowly on an undulating or rough road to stress the vehicle body.

CHECK RELATED SERVICE BULLETINS

After verifying the customer concern or symptom, check ASIST for Technical Service Bulletins (TSBs) related to that concern or symptom.
If a TSB relates to the symptom, follow the procedure to repair the noise.

LOCATE THE NOISE AND IDENTIFY THE ROOT CAUSE

1. Narrow down the noise to a general area.To help pinpoint the source of the noise, use a listening tool (Chassis Ear: J-39570, Engine Ear: J-39565 and mechanic's stethoscope).
2. Narrow down the noise to a more specific area and identify the cause of the noise by:

- removing the components in the area that you suspect the noise is coming from.
  Do not use too much force when removing clips and fasteners, otherwise clips and fasteners can be broken or lost during the repair, resulting in the creation of new noise.
- tapping or pushing/pulling the component that you suspect is causing the noise.
  Do not tap or push/pull the component with excessive force, otherwise the noise will be eliminated only temporarily.
- feeling for a vibration with your hand by touching the component(s) that you suspect is (are) causing the noise.
- placing a piece of paper between components that you suspect are causing the noise.
- looking for loose components and contact marks.
  Refer to GW-7, "Generic Squeak and Rattle Troubleshooting".

REPAIR THE CAUSE

- If the cause is a loose component, tighten the component securely.
- If the cause is insufficient clearance between components:
- separate components by repositioning or loosening and retightening the component, if possible.
- insulate components with a suitable insulator such as urethane pads, foam blocks, felt cloth tape or urethane tape. A NISSAN Squeak and Rattle Kit (J-43980) is available through your authorized NISSAN Parts Department.

CAUTION:
Do not use excessive force as many components are constructed of plastic and may be damaged.
Always check with the Parts Department for the latest parts information.
The following materials are contained in the NISSAN Squeak and Rattle Kit (J-43980). Each item can be ordered separately as needed.
URETHANE PADS [1.5 mm (0.059 in) thick]
Insulates connectors, harness, etc.
76268-9E005: 100×135 mm (3.94×5.31 in)/76884-71L01: 60×85 mm (2.36×3.35 in)/76884-71L02: 15×25 mm (0.59×0.98 in)
INSULATOR (Foam blocks)
Insulates components from contact. Can be used to fill space behind a panel.
73982-9E000: 45 mm (1.77 in) thick, 50×50 mm (1.97×1.97 in)/73982-50Y00: 10 mm (0.39 in) thick, 50×50 mm (1.97×1.97 in)
INSULATOR (Light foam block)
80845-71L00: 30 mm (1.18 in) thick, 30×50 mm (1.18×1.97 in)
FELT CLOTH TAPE
Used to insulate where movement does not occur. Ideal for instrument panel applications.
68370-4B000: 15×25 mm (0.59×0.98 in) pad/68239-13E00: 5 mm (0.20 in) wide tape roll. The following materials not found in the kit can also be used to repair squeaks and rattles.
UHMW (TEFLON) TAPE
Insulates where slight movement is present. Ideal for instrument panel applications.

SILICONE GREASE
Used instead of UHMW tape that will be visible or not fit.
Note: Will only last a few months.
SILICONE SPRAY
Use when grease cannot be applied.
DUCT TAPE
Use to eliminate movement.

CONFIRM THE REPAIR

Confirm that the cause of a noise is repaired by test driving the vehicle. Operate the vehicle under the same conditions as when the noise originally occurred. Refer to the notes on the Diagnostic Worksheet.

Generic Squeak and Rattle Troubleshooting

INFOID:0000000001704133

Refer to Table of Contents for specific component removal and installation information.

INSTRUMENT PANEL

Most incidents are caused by contact and movement between:

1. The cluster lid A and instrument panel
2. Acrylic lens and combination meter housing
3. Instrument panel to front pillar garnish
4. Instrument panel to windshield
5. Instrument panel mounting pins
6. Wiring harnesses behind the combination meter
7. A/C defroster duct and duct joint

These incidents can usually be located by tapping or moving the components to duplicate the noise or by pressing on the components while driving to stop the noise. Most of these incidents can be repaired by applying felt cloth tape or silicone spray (in hard to reach areas). Urethane pads can be used to insulate wiring harness.

CAUTION:
Do not use silicone spray to isolate a squeak or rattle. If you saturate the area with silicone, you will not be able to recheck the repair.

CENTER CONSOLE

Components to pay attention to include:

1. Shifter assembly cover to finisher
2. A/C control unit and cluster lid C
3. Wiring harnesses behind audio and A/C control unit

The instrument panel repair and isolation procedures also apply to the center console.

DOORS

Pay attention to the:

1. Finisher and inner panel making a slapping noise
2. Inside handle escutcheon to door finisher
3. Wiring harnesses tapping
4. Door striker out of alignment causing a popping noise on starts and stops

Tapping or moving the components or pressing on them while driving to duplicate the conditions can isolate many of these incidents. You can usually insulate the areas with felt cloth tape or insulator foam blocks from the NISSAN Squeak and Rattle Kit (J-43980) to repair the noise.

TRUNK

Trunk noises are often caused by a loose jack or loose items put into the trunk by the owner.
In addition look for:

1. Trunk lid bumpers out of adjustment
2. Trunk lid striker out of adjustment
3. The trunk lid torsion bars knocking together
4. A loose license plate or bracket

Most of these incidents can be repaired by adjusting, securing or insulating the item(s) or component(s) causing the noise.

SUNROOF/HEADLINING

Noises in the sunroof/headlining area can often be traced to one of the following:

1. Sunroof lid, rail, linkage or seals making a rattle or light knocking noise
2. Sun visor shaft shaking in the holder
3. Front or rear windshield touching headliner and squeaking

Again, pressing on the components to stop the noise while duplicating the conditions can isolate most of these incidents. Repairs usually consist of insulating with felt cloth tape.

OVERHEAD CONSOLE (FRONT AND REAR)

Overhead console noises are often caused by the console panel clips not being engaged correctly. Most of these incidents are repaired by pushing up on the console at the clip locations until the clips engage.
In addition look for:

1. Loose harness or harness connectors.
2. Front console map/reading lamp lense loose.
3. Loose screws at console attachment points.

SEATS

When isolating seat noise it's important to note the position the seat is in and the load placed on the seat when the noise is present. These conditions should be duplicated when verifying and isolating the cause of the noise.
Cause of seat noise include:

1. Headrest rods and holder
2. A squeak between the seat pad cushion and frame
3. The rear seatback lock and bracket

These noises can be isolated by moving or pressing on the suspected components while duplicating the conditions under which the noise occurs. Most of these incidents can be repaired by repositioning the component or applying urethane tape to the contact area.

UNDERHOOD

Some interior noise may be caused by components under the hood or on the engine wall. The noise is then transmitted into the passenger compartment.
Causes of transmitted underhood noise include:

1. Any component mounted to the engine wall
2. Components that pass through the engine wall
3. Engine wall mounts and connectors
4. Loose radiator mounting pins
5. Hood bumpers out of adjustment
6. Hood striker out of adjustment

These noises can be difficult to isolate since they cannot be reached from the interior of the vehicle. The best method is to secure, move or insulate one component at a time and test drive the vehicle. Also, engine RPM or load can be changed to isolate the noise. Repairs can usually be made by moving, adjusting, securing, or insulating the component causing the noise.

Diagnostic Worksheet

INFOID:0000000001704134

Dear Customer:
We are concerned about your satisfaction with your vehicle. Repairing a squeak or rattle sometimes can be very difficult. To help us fix your vehicle right the first time, please take a moment to note the area of the vehicle where the squeak or rattle occurs and under what conditions. You may be asked to take a test drive with a service advisor or technician to ensure we confirm the noise you are hearing.

SQUEAK & RATTLE DIAGNOSTIC WORKSHEET

I. WHERE DOES THE NOISE COME FROM? (circle the area of the vehicle)
The illustrations are for reference only, and may not reflect the actual configuration of your vehicle.

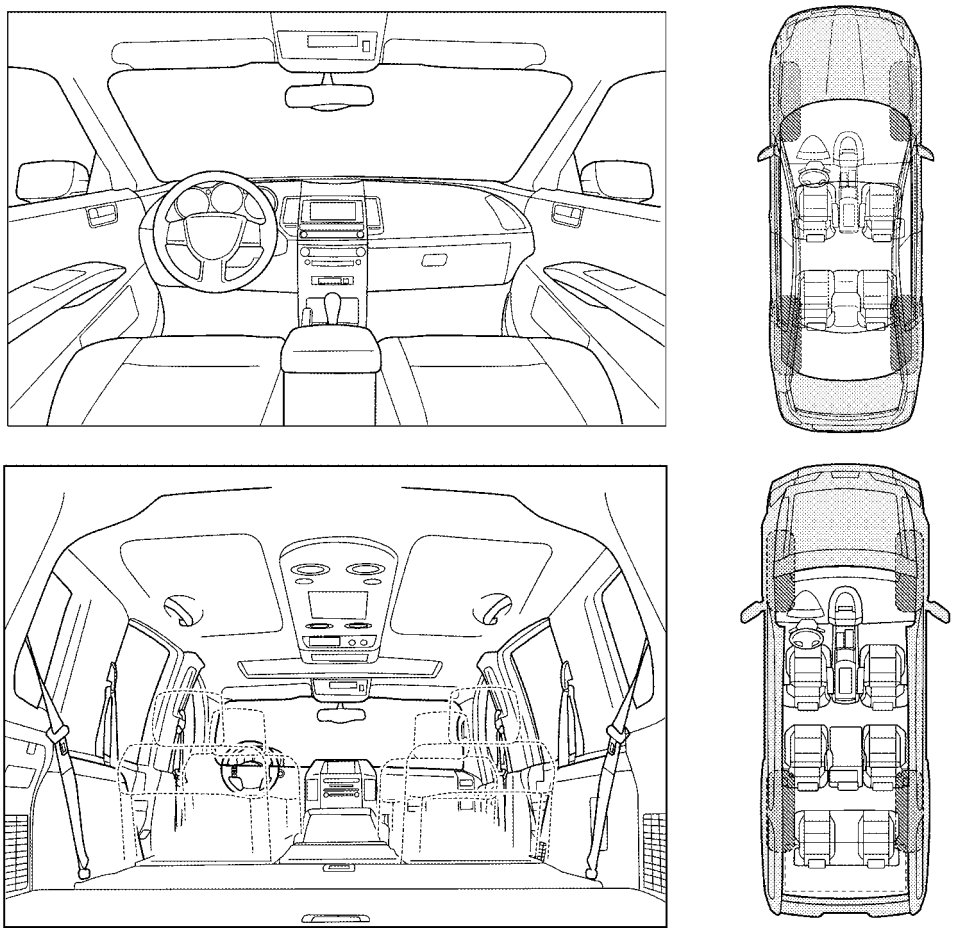

Continue to page 2 of the worksheet and briefly describe the location of the noise or rattle. In addition, please indicate the conditions which are present when the noise occurs.

-1-

LAIA0072E

SQUEAK & RATTLE DIAGNOSTIC WORKSHEET - page 2

Briefly describe the location where the noise occurs:

_____

_____

II. WHEN DOES IT OCCUR? (please check the boxes that apply)

- ☐ Anytime
- ☐ 1st time in the morning
- ☐ Only when it is cold outside
- ☐ Only when it is hot outside
- ☐ After sitting out in the rain
- ☐ When it is raining or wet
- ☐ Dry or dusty conditions
- ☐ Other:

III. WHEN DRIVING:

- ☐ Through driveways
- ☐ Over rough roads
- ☐ Over speed bumps
- ☐ Only about ____ mph
- ☐ On acceleration
- ☐ Coming to a stop
- ☐ On turns: left, right or either (circle)
- ☐ With passengers or cargo
- ☐ Other: _____
- ☐ After driving _____ miles or _____ minutes

IV. WHAT TYPE OF NOISE

- ☐ Squeak (like tennis shoes on a clean floor)
- ☐ Creak (like walking on an old wooden floor)
- ☐ Rattle (like shaking a baby rattle)
- ☐ Knock (like a knock at the door)
- ☐ Tick (like a clock second hand)
- ☐ Thump (heavy muffled knock noise)
- ☐ Buzz (like a bumble bee)

TO BE COMPLETED BY DEALERSHIP PERSONNEL

Test Drive Notes:

_____

_____

_____

	YES	NO	Initials of person performing
Vehicle test driven with customer	☐	☐	_____
- Noise verified on test drive	☐	☐	_____
- Noise source located and repaired	☐	☐	_____
- Follow up test drive performed to confirm repair	☐	☐	_____

VIN: _____ Customer Name _____

W.O.# _____ Date: _____

This form must be attached to Work Order

LAIA0071E

WINDSHIELD GLASS

Removal and Installation

INFOID:0000000001704135

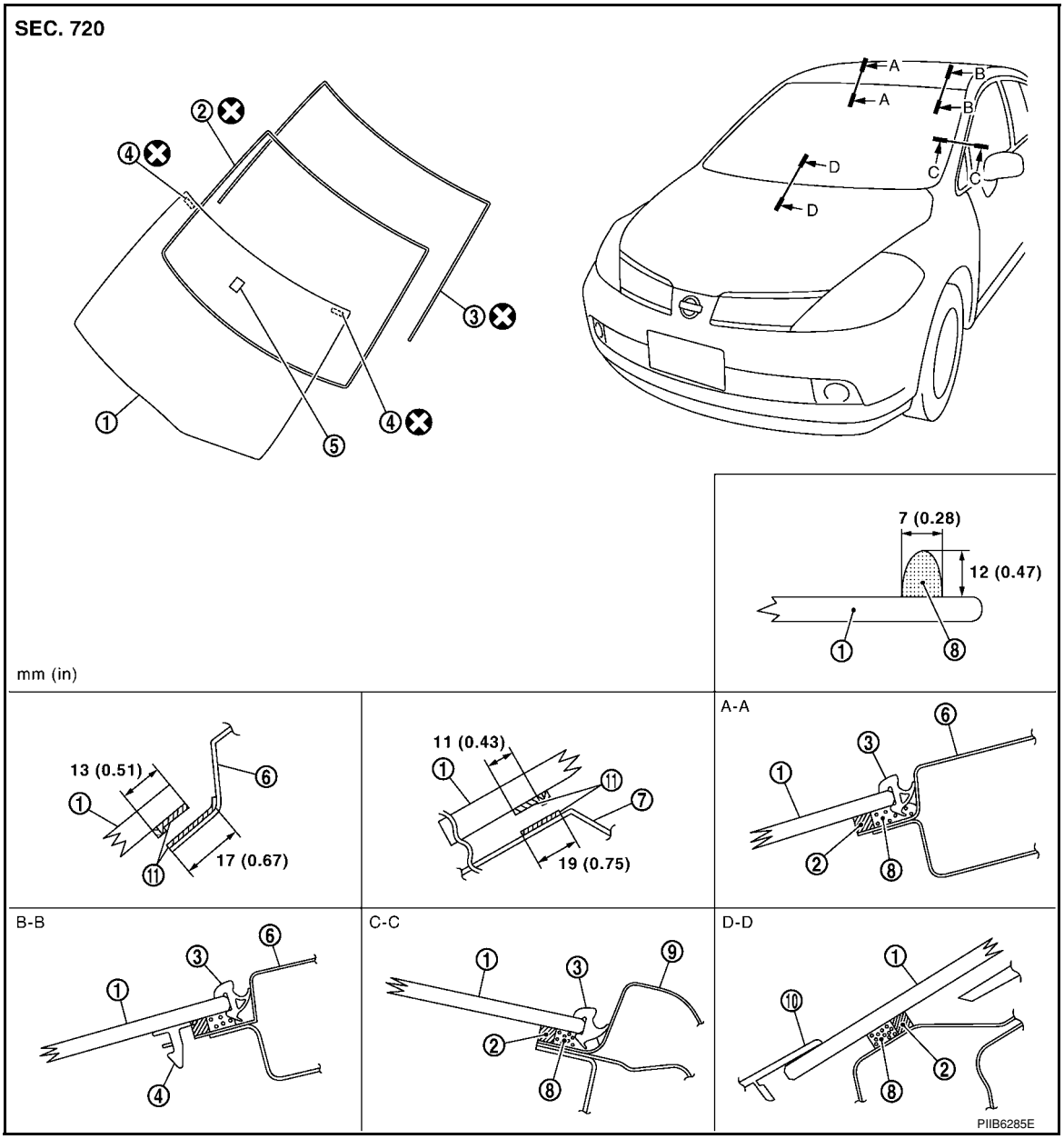

1. Windshield glass assembly	2. Dam sealant	3. Windshield molding
4. Spacer	5. Mirror base	6. Roof panel outer
7. Cowl top front	8. Adhesive	9. Front pillar outer panel
10. Cowl top cover	11. Primer	

REMOVAL

1. Partially remove the headlining (front edge). Refer to EI-45.
2. Remove the front wiper arms. Refer to WW-18, "Removal and Installation of Front Wiper Arms".
3. Remove the cowl top cover. Refer to EI-21.
4. Disconnect the harness connector of wiper deicer.
5. Apply protective tape around the windshield glass to protect the painted surface from damage.

After removing windshield upper molding, remove glass using piano wire or power cutting tool (A) and an inflatable pump bag (B).

- If a windshield glass is to be reused, mark the body and the glass with mating marks.

WARNING:

When cutting the glass from the vehicle, always wear safety glasses and heavy gloves to help prevent glass splinters from entering your eyes or cutting your hands.

CAUTION:

- **When a windshield glass is to be reused, do not use a cutting knife or power cutting tool.**
- **Be careful not to scratch the glass when removing.**
- **Do not set or stand the glass on its edge. Small chips may develop into cracks.**

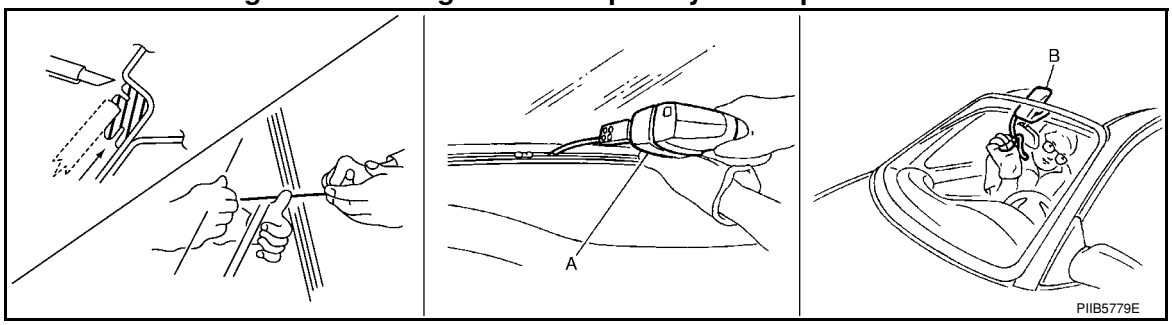

INSTALLATION

- Use a genuine NISSAN Urethane Adhesive Kit (if available) or equivalent and follow the instructions furnished with it.
- While the urethane adhesive is curing, open a door window. This will prevent the glass from being forced out by passenger room air pressure when a door is closed.
- The molding must be installed securely so that it is in position and leaves no gap.
- Inform the customer that the vehicle should remain stationary until the urethane adhesive has completely cured (preferably 24 hours). Curing time varies with temperature and humidity.

WARNING:

- **Keep heat and open flames away as primers and adhesive are flammable.**
- **The materials contained in the kit are harmful if swallowed, and may irritate skin and eyes. Avoid contact with the skin and eyes.**
- **Use in an open, well ventilated location. Avoid breathing the vapors. They can be harmful if inhaled. If affected by vapor inhalation, immediately move to an area with fresh air.**
- **Driving the vehicle before the urethane adhesive has completely cured may affect the performance of the windshield in case of an accident.**

CAUTION:

- **Do not use an adhesive which is past its usable term. Shelf life of the adhesive is limited to six months after the date of manufacture. Carefully adhere to the expiration or manufacture date printed on the box.**
- **Keep primers and adhesive in a cool, dry place. Ideally, they should be stored in a refrigerator.**
- **Do not leave primers or adhesive cartridge unattended with their caps open or off.**
- **The vehicle should not be driven for at least 24 hours or until the urethane adhesive has completely cured. Curing time varies depending on temperature and humidities. The curing time will increase under lower temperatures and lower humidities.**

Repairing Water Leaks

Leaks can be repaired without removing and reinstalling glass.

If water is leaking between the urethane adhesive material and body or glass, determine the extent of leakage. This can be done by applying water to the windshield area while pushing glass outward.

To stop the leak, apply primer (if necessary) and then urethane adhesive to the leak point.

OPERA WINDOW GLASS

Removal and Installation

INFOID:0000000001704136

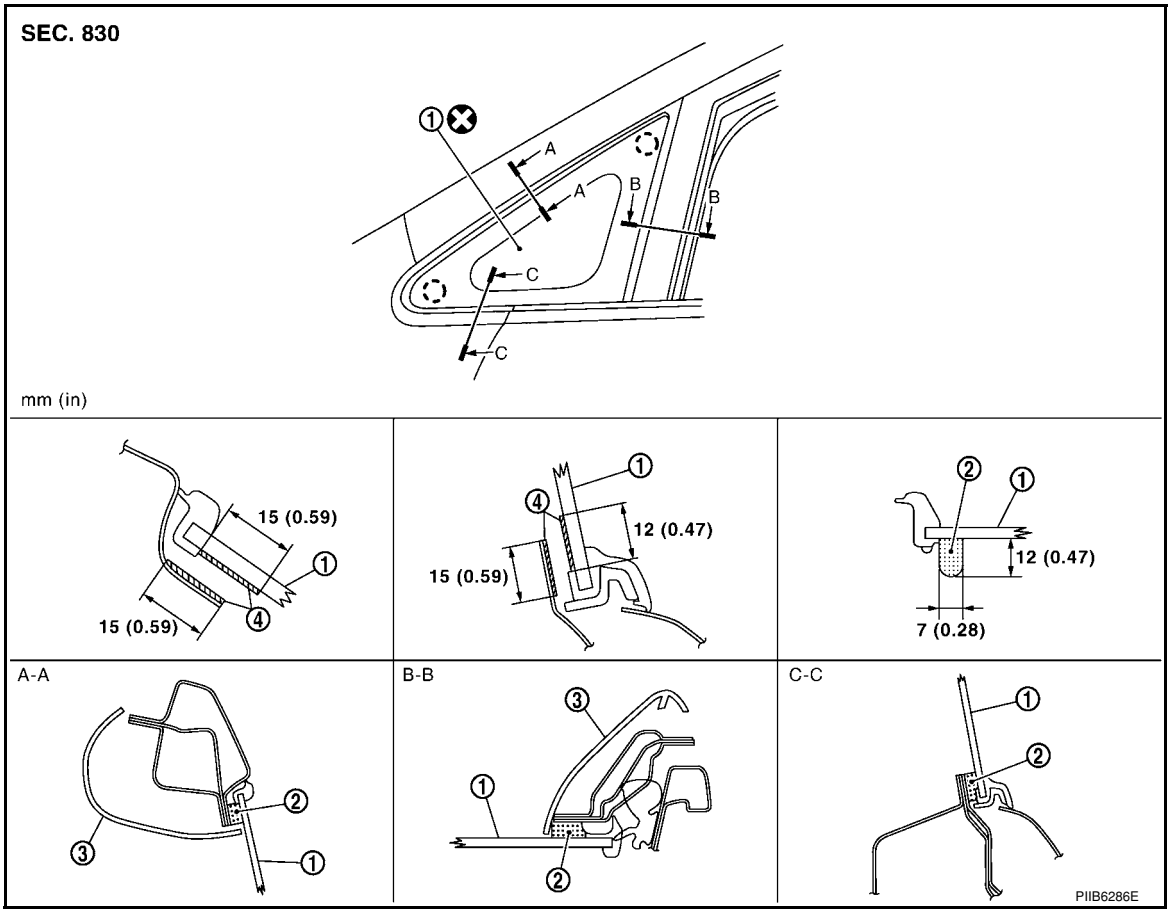

1. Opera window glass
2. Adhesive
3. Front pillar garnish
4. Primer

REMOVAL

1. Remove the front pillar garnish. Refer to EI-38, "Removal and Installation".
2. Remove the instrument side panel. Refer to IP-10.
3. Apply protective tape around the opera window glass to protect the painted surface from damage.

- If a opera window glass is to be reused, mark the body and the glass with mating marks.

4. Remove the opera window glass using piano wire or power cutting tool and inflatable pump bag.

WARNING:

When cutting the glass from the vehicle, always wear safety glasses and heavy gloves to help prevent glass splinters from entering your eyes or cutting your hands.

CAUTION:

- **When a opera window glass is to be reused, do not use a cutting knife or power cutting tool.**
- **Be careful not to scratch the glass when removing.**
- **Do not set or stand the glass on its edge. Small chips may develop into cracks.**
- **Clips are molded to the side window glass. Replace the clips with new ones if they are damaged when removing the side window glass.**

INSTALLATION

- Use a genuine NISSAN Urethane Adhesive Kit (if available) or equivalent and follow the instructions furnished with it.
- While the urethane adhesive is curing, open a door window. This will prevent the glass from being forced out by passenger room air pressure when a door is closed.
- The opera window glass must be installed securely so that the molding around glass is in position and leaves no gap.

- Inform the customer that the vehicle should remain stationary until the urethane adhesive has completely cured (preferably 24 hours). Curing time varies with temperature and humidity.

WARNING:

- **Keep heat and open flames away as primers and adhesive are flammable.**
- **The materials contained in the kit are harmful if swallowed, and may irritate skin and eyes. Avoid contact with the skin and eyes.**
- **Use in an open, well ventilated location. Avoid breathing the vapors. They can be harmful if inhaled. If affected by vapor inhalation, immediately move to an area with fresh air.**
- **Driving the vehicle before the urethane adhesive has completely cured may affect the performance of the side window in case of an accident.**

CAUTION:

- **Do not use an adhesive which is past its usable term. Shelf life of the adhesive is limited to six months after the date of manufacture. Carefully adhere to the expiration or manufacture date printed on the box.**
- **Keep primers and adhesive in a cool, dry place. Ideally, they should be stored in a refrigerator.**
- **Do not leave primers or adhesive cartridge unattended with their caps open or off.**
- **The vehicle should not be driven for at least 24 hours or until the urethane adhesive has completely cured. Curing time varies depending on temperature and humidities. The curing time will increase under lower temperature and lower humidity.**

Repairing Water Leaks

Leaks can be repaired without removing and reinstalling glass.

If water is leaking between the urethane adhesive material and body or glass, determine the extent of leakage. This can be done by applying water to the side window area while pushing glass outward.

To stop the leak, apply primer (if necessary) and then urethane adhesive to the leak point.

REAR WINDOW GLASS AND MOLDING

Removal and Installation

INFOID:0000000001704137

Hatchback

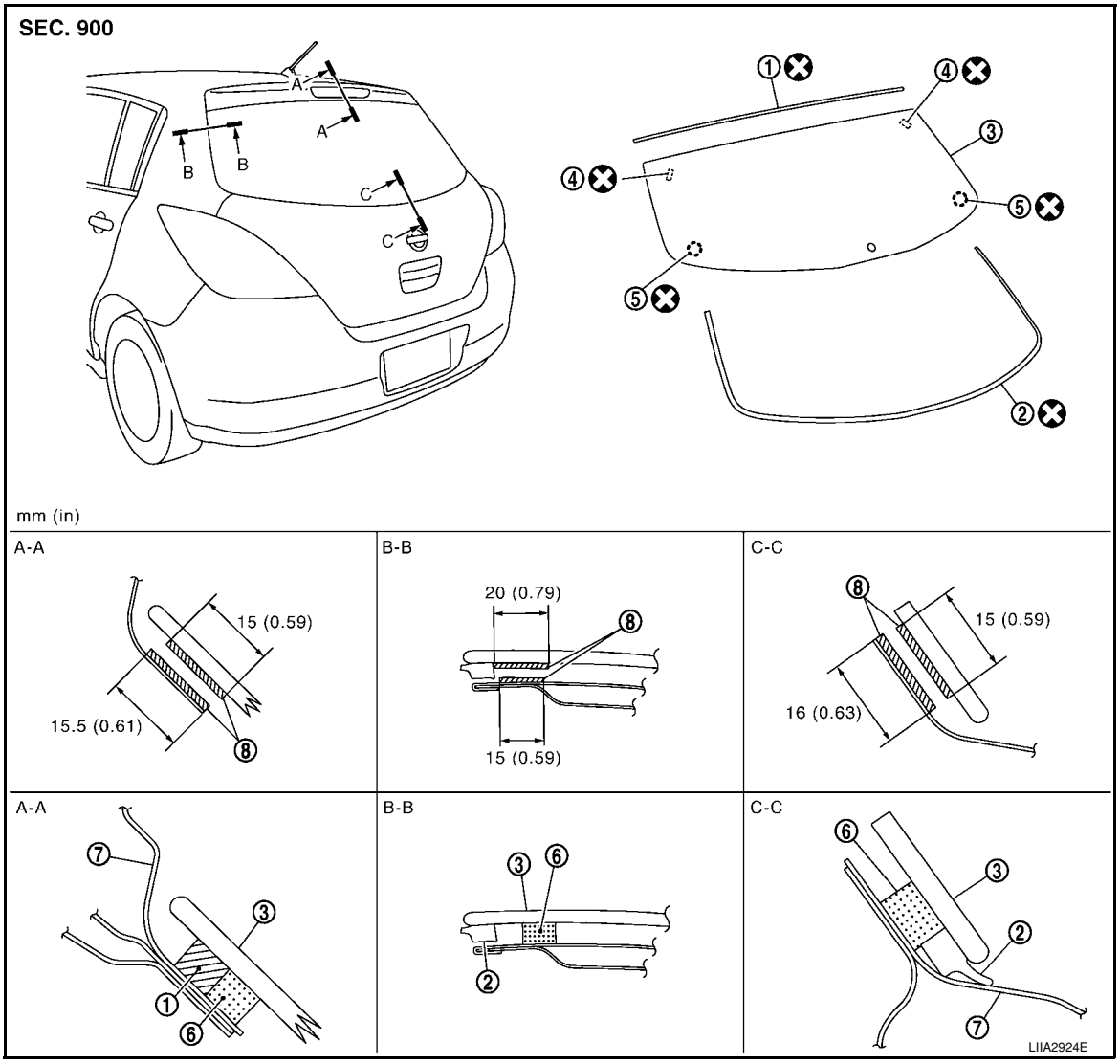

1. Dam rubber
2. Back door window molding (Lower)
3. Back door window glass
4. Clip (Upper)
5. Clip (Lower)
6. Adhesive
7. Back door outer panel
8. Primer

Sedan

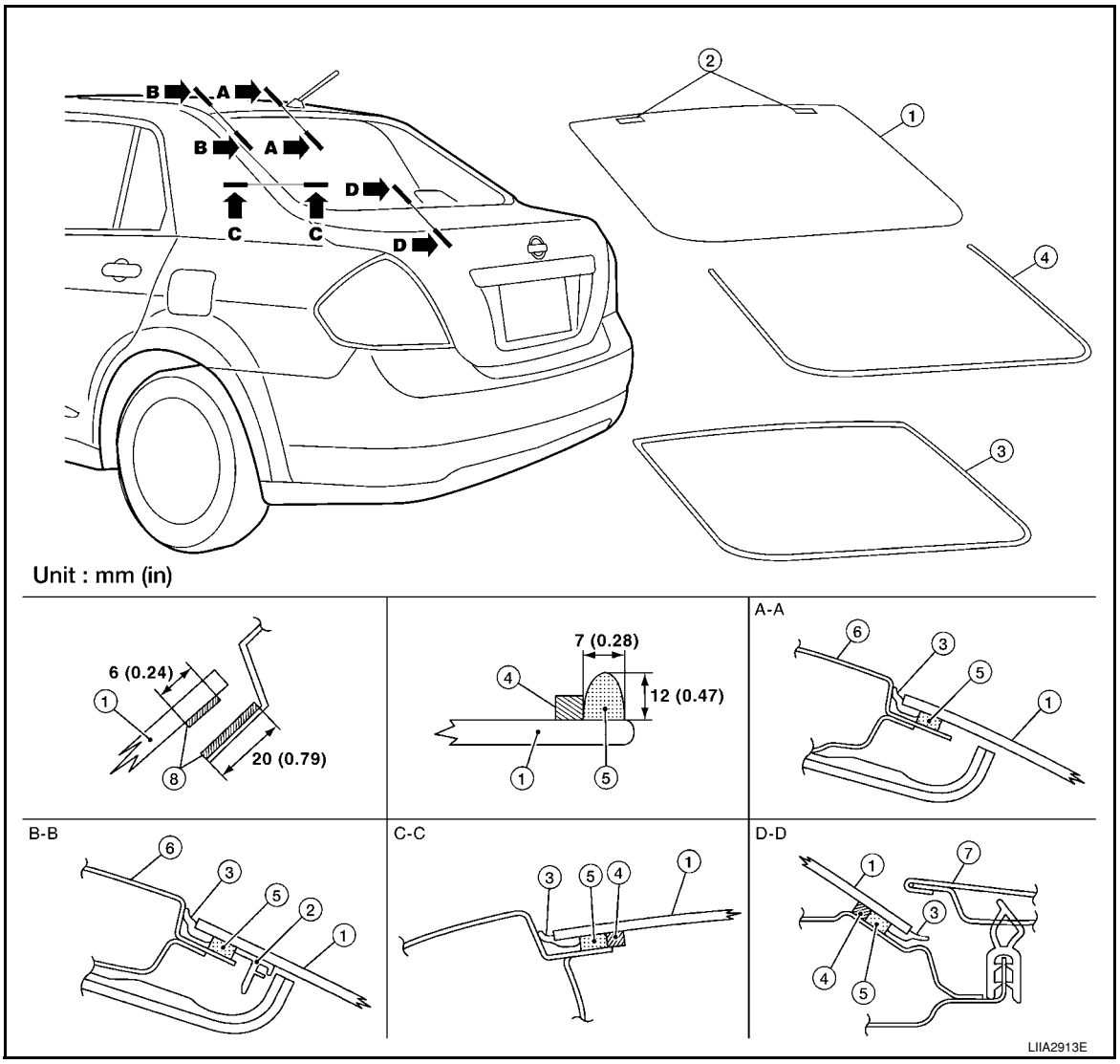

1. Rear window glass	2. Spacer	3. Rear window molding
4. Rubber dam	5. Adhesive	6. Roof panel outer
7. Trunk lid outer panel	8. Primer	

REMOVAL

1. If equipped, remove the rear wiper arm and motor. Refer to WW-31, "Removal and Installation" .
2. Remove the connectors and grounds for the rear window defogger.

- Remove glass using piano wire or power cutting tool and an inflatable pump bag.
- If the rear window glass is to be reused, mark the body and the glass with mating marks.

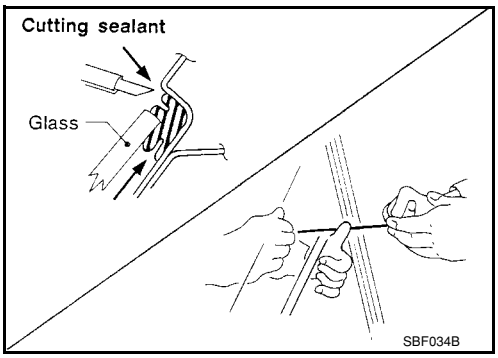

WARNING:

When cutting the glass from the vehicle, always wear safety glasses and heavy gloves to help prevent glass splinters from entering your eyes or cutting your hands.

CAUTION:

- **When a windshield glass is to be reused, do not use a cutting knife or power cutting tool.**
- **Be careful not to scratch the glass when removing.**
- **Do not set or stand the glass on its edge. Small chips may develop into cracks.**

INSTALLATION

Installation is in the reverse order of removal.

- Use a genuine NISSAN Urethane Adhesive Kit (if available) or equivalent and follow the instructions furnished with it.
- While the urethane adhesive is curing, open a door window. This will prevent the glass from being forced out by passenger compartment air pressure when a door is closed.
- The molding must be installed securely so that it is in position and leaves no gap.
- Check gap along bottom to confirm that glass does not contact sheet metal.
- Inform the customer that the vehicle should remain stationary until the urethane adhesive has completely cured (preferably 24 hours). Curing time varies with temperature and humidity.

WARNING:

- **Keep heat and open flames away as primers and adhesive are flammable.**
- **The materials contained in the kit are harmful if swallowed, and may irritate skin and eyes. Avoid contact with the skin and eyes.**
- **Use in an open, well ventilated location. Avoid breathing the vapors. They can be harmful if inhaled. If affected by vapor inhalation, immediately move to an area with fresh air.**
- **Driving the vehicle before the urethane adhesive has completely cured may affect the performance of the windshield in case of an accident.**

CAUTION:

- **Do not use an adhesive which is past its usable term. Shelf life of this product is limited to six months after the date of manufacture. Carefully adhere to the expiration or manufacture date printed on the box.**
- **Keep primers and adhesive in a cool, dry place. Ideally, they should be stored in a refrigerator.**
- **Do not leave primers or adhesive cartridge unattended with their caps open or off.**
- **The vehicle should not be driven for at least 24 hours or until the urethane adhesive has completely cured. Curing time varies depending on temperature and humidity. The curing time will increase under lower temperatures and lower humidities.**

Repairing Water leaks for Rear Window Glass

Leaks can be repaired without removing or reinstalling glass.
If water is leaking between urethane adhesive material and body or glass, determine the extent of leakage.
This can be done by applying water to the rear window area while pushing glass outward.
To stop leak, apply primer (if necessary) and then urethane adhesive to the leak point.

POWER WINDOW SYSTEM

Component Parts and Harness Connector Location

INFOID:0000000001704138

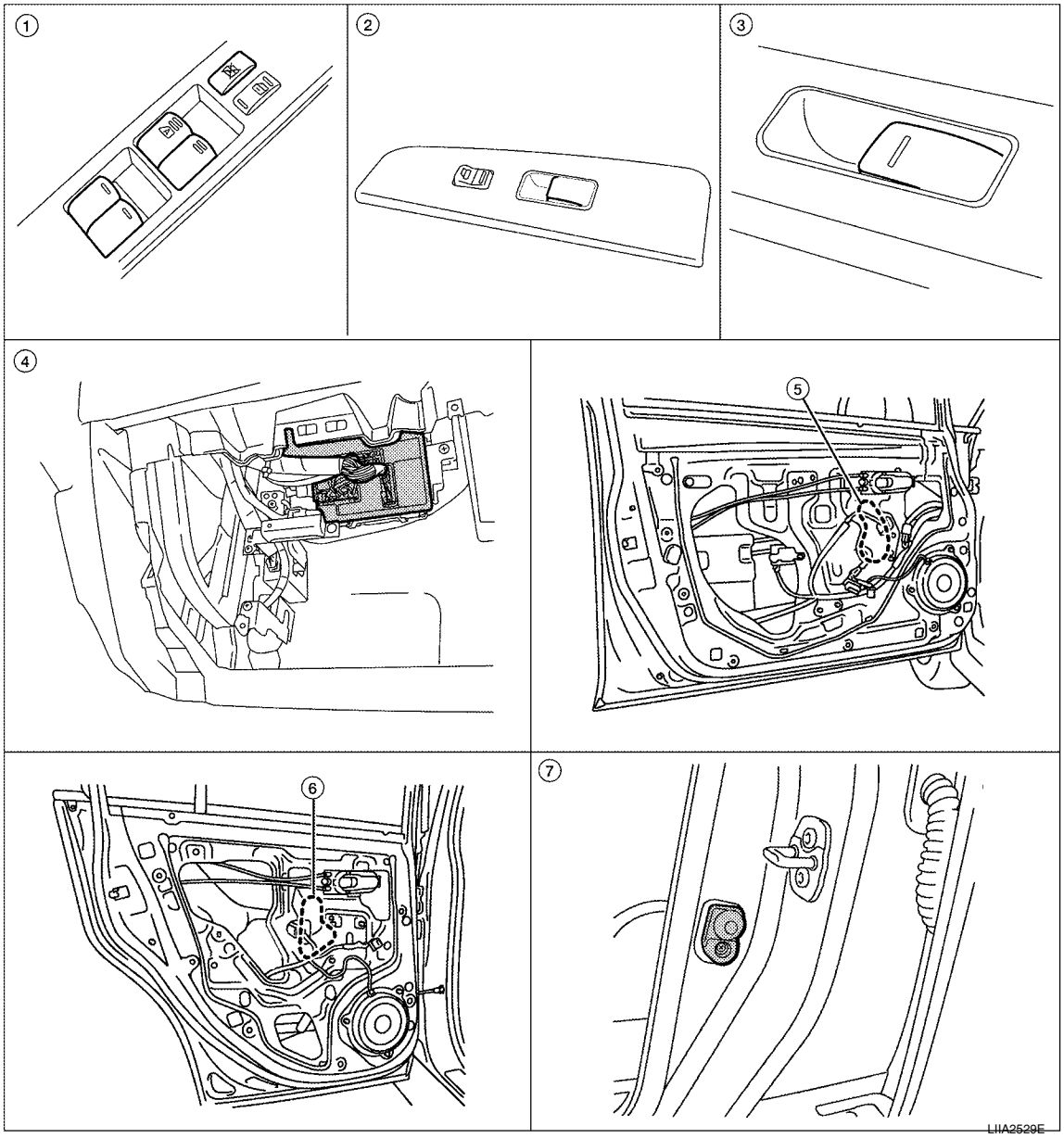

1. Main power window and door lock/ unlock switch D7, D8
2. Power window and door lock/unlock switch RH D105
3. Rear power window switch LH D203, RH D303
4. BCM M18, M19, M20 (view with glove box removed)
5. Front power window motor LH D9, RH D104
6. Rear power window motor LH D204, RH D304
7. Front door switch LH B8, RH B108

System Description

INFOID:0000000001704139

Power is supplied at all times
- through 40A fusible link (letter **g** , located in the fuse and fusible link box)
- to BCM terminal 70.

With ignition switch in ON or START position, power is supplied
- through 10A fuse [No. 6, located in the fuse block (J/B)]
- to BCM terminal 38

- through BCM terminal 68
- to main power window and door lock/unlock switch terminal 10
- to power window and door lock/unlock switch RH terminal 8 and
- to rear power window switches LH and RH terminal 1.

Ground is supplied
- to BCM terminal 67
- to main power window and door lock/unlock switch terminal 17 and
- to power window and door lock/unlock switch RH terminal 3
- through body grounds M57 and M61.

With ignition switch in ACC or ON position, power is supplied
- through 10A fuse [No. 20, located in the fuse block (J/B)]
- to BCM terminal 11.

MANUAL OPERATION

Front Door LH

WINDOW UP

When the front LH switch in the main power window and door lock/unlock switch is pulled in the up position, power is supplied
- through main power window and door lock/unlock switch terminal 8
- to front power window motor LH terminal 2.

Ground is supplied
- through main power window and door lock/unlock switch terminal 11
- to front power window motor LH terminal 3.

Then, the motor raises the window until the switch is released.

WINDOW DOWN

When the front LH switch in the main power window and door lock/unlock switch is pressed in the down position, power is supplied
- through main power window and door lock/unlock switch terminal 11
- to front power window motor LH terminal 3.

Ground is supplied
- through main power window and door lock/unlock switch terminal 8
- to front power window motor LH terminal 2.

Then, the motor lowers the window until the switch is released.

Front Door RH

POWER WINDOW AND DOOR LOCK/UNLOCK SWITCH RH OPERATION

WINDOW UP

When the power window and door lock/unlock switch RH is pulled in the up position, power is supplied
- through power window and door lock/unlock switch RH terminal 7
- to front power window motor RH terminal 2.

Ground is supplied
- through power window and door lock/unlock switch RH terminal 6
- to front power window motor RH terminal 1.

Then, the motor raises the window until the switch is released.

WINDOW DOWN

When the power window and door lock/unlock switch RH is pressed in the down position, power is supplied
- through power window and door lock/unlock switch RH terminal 6
- to front power window motor RH terminal 1.

Ground is supplied
- through power window and door lock/unlock switch RH terminal 7
- to front power window motor RH terminal 2.

Then, the motor lowers the window until the switch is released.

MAIN POWER WINDOW AND DOOR LOCK/UNLOCK SWITCH OPERATION

WINDOW UP

When the main power window and door lock/unlock switch (front RH) is pulled in the up position, power is supplied
- through main power window and door lock/unlock switch terminal 16
- to power window and door lock/unlock switch RH terminal 12
- through power window and door lock/unlock switch RH terminal 7
- to front power window motor RH terminal 2.

Ground is supplied

- through main power window and door lock/unlock switch terminal 12
- to power window and door lock/unlock switch RH terminal 11
- through power window and door lock/unlock switch LH terminal 6
- to front power window motor RH terminal 1.

Then, the motor raises the window until the switch is released.

WINDOW DOWN

When the main power window and door lock/unlock switch (front RH) is pressed in the down position, power is supplied

- through main power window and door lock/unlock switch terminal 12
- to power window and door lock/unlock switch LH terminal 11
- through power window and door lock/unlock switch LH terminal 6
- to front power window motor RH terminal 1.

Ground is supplied

- through main power window and door lock/unlock switch terminal 16
- to power window and door lock/unlock switch RH terminal 12
- through power window and door lock/unlock switch LH terminal 7
- to front power window motor RH terminal 2.

Then, the motor lowers the window until the switch is released.

Rear Door (LH or RH)

REAR POWER WINDOW SWITCH LH OR RH OPERATION

WINDOW UP

When the rear power window switch LH or RH is pulled in the up position, power is supplied

- through rear power window switch LH or RH terminal 5
- to rear power window motor LH or RH terminal 2.

Ground is supplied

- through rear power window switch LH or RH terminal 4
- to rear power window motor LH or RH terminal 1.

Then, the motor raises the window until the switch is released.

WINDOW DOWN

When the rear power window switch LH or RH is pressed in the down position, power is supplied

- through rear power window switch LH or RH terminal 4
- to rear power window motor LH or RH terminal 1.

Ground is supplied

- through rear power window switch LH or RH terminal 5
- to rear power window motor LH or RH terminal 2.

Then, the motor lowers the window until the switch is released.

MAIN POWER WINDOW AND DOOR LOCK/UNLOCK SWITCH OPERATION

WINDOW UP

When the main power window and door lock/unlock switch (rear LH) is pulled in the up position, power is supplied

- through main power window and door lock/unlock switch terminal 1
- to rear power window switch LH terminal 2
- through rear power window switch LH terminal 5
- to rear power window motor LH terminal 2.

Ground is supplied

- through main power window and door lock/unlock switch terminal 3
- to rear power window switch LH terminal 3
- through rear power window switch LH terminal 4
- to rear power window motor LH terminal 1.

Then, the motor raises the window until the switch is released.

When the main power window and door lock/unlock switch (rear RH) is pulled in the up position, power is supplied

- through main power window and door lock/unlock switch terminal 7
- to rear power window switch RH terminal 2
- through rear power window switch RH terminal 5
- to rear power window motor RH terminal 2.

Ground is supplied

- through main power window and door lock/unlock switch terminal 5
- through rear power window switch RH terminal 3
- to rear power window switch RH terminal 4
- to rear power window motor RH terminal 1.

Then, the motor raises the window until the switch is released.

WINDOW DOWN

When the main power window and door lock/unlock switch (rear LH) is pressed in the down position, power is supplied

- through main power window and door lock/unlock switch terminal 3
- to rear power window switch LH terminal 3
- through rear power window switch LH terminal 4
- to rear power window motor LH terminal 1.

Ground is supplied

- through main power window and door lock/unlock switch terminal 1
- to rear power window switch LH terminal 2
- through rear power window switch LH terminal 5
- to rear power window motor LH terminal 2.

Then, the motor lowers the window until the switch is released.

When the main power window and door lock/unlock switch (rear RH) is pressed in the down position, power is supplied

- through main power window and door lock/unlock switch terminal 5
- to rear power window switch RH terminal 3
- through rear power window switch RH terminal 4
- to rear power window motor RH terminal 1.

Ground is supplied

- through main power window and door lock/unlock switch terminal 7
- to rear power window switch RH terminal 2
- through rear power window switch RH terminal 5
- to rear power window motor RH terminal 2.

Then, the motor lowers the window until the switch is released.

AUTO OPERATION

The power window AUTO feature enables the driver to open the window without holding the window switch in the down position.

POWER WINDOW LOCK

The power window lock is designed to lock operation of all windows except for front door window LH.

When in the lock position, the power window lock disables power window and door lock/unlock switch RH and rear power window switch LH and RH by disconnecting switch ground signal. This prevents the power window motors from operating.

RETAINED POWER OPERATION

When the ignition switch is turned to the OFF position from ON or START position, power is supplied for 45 seconds

- through BCM terminal 68
- to main power window and door lock/unlock switch terminal 10
- to power window and door lock/unlock switch RH terminal 8 and
- to rear power window switches LH and RH terminal 1.

When power and ground are supplied, the BCM continues to be energized, and the power window can be operated.

The retained power operation is canceled when the front LH or front RH door is opened.

Retained power operation period can be changed by CONSULT-III. Refer to GW-28, "CONSULT-III Function (BCM)" .

ANTI-PINCH SYSTEM

Main power window and door lock/unlock switch monitors the power window motor operation and the power window position (full closed or other) for front LH power window by the signal from encoder in front power window motor LH.

When main power window and door lock/unlock switch detects interruption during the following close operations

- automatic close operation when ignition switch is in the ON position
- automatic close operation during retained power operation

Main power window and door lock/unlock switch controls front power window motor LH for open and the power window will be lowered.

CAN Communication System Description

INFOID:0000000001704140

Refer to LAN-6, "System Description".

Schematic

INFOID:0000000001704141

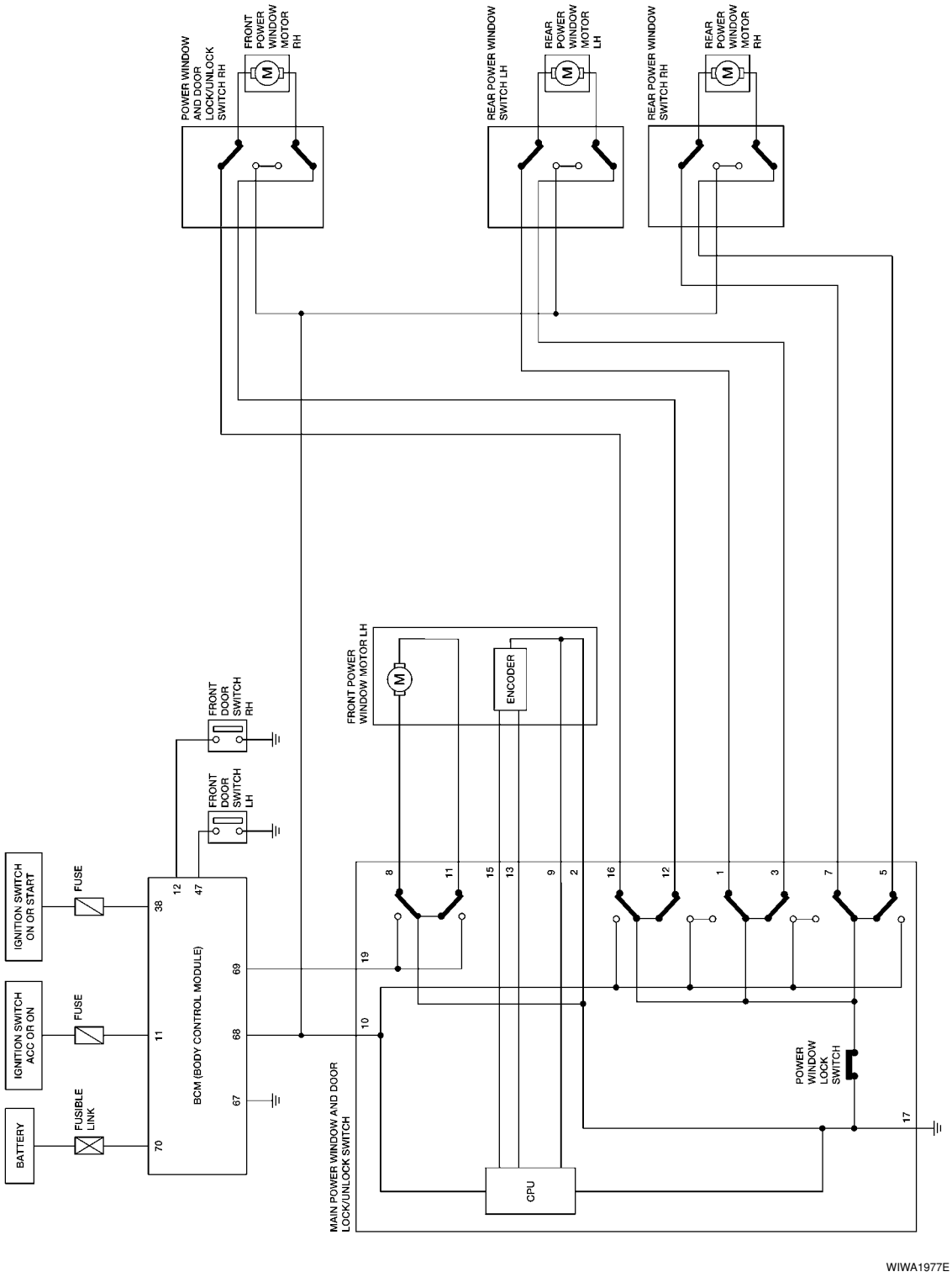

Wiring Diagram - WINDOW-

INFOID:0000000001704142

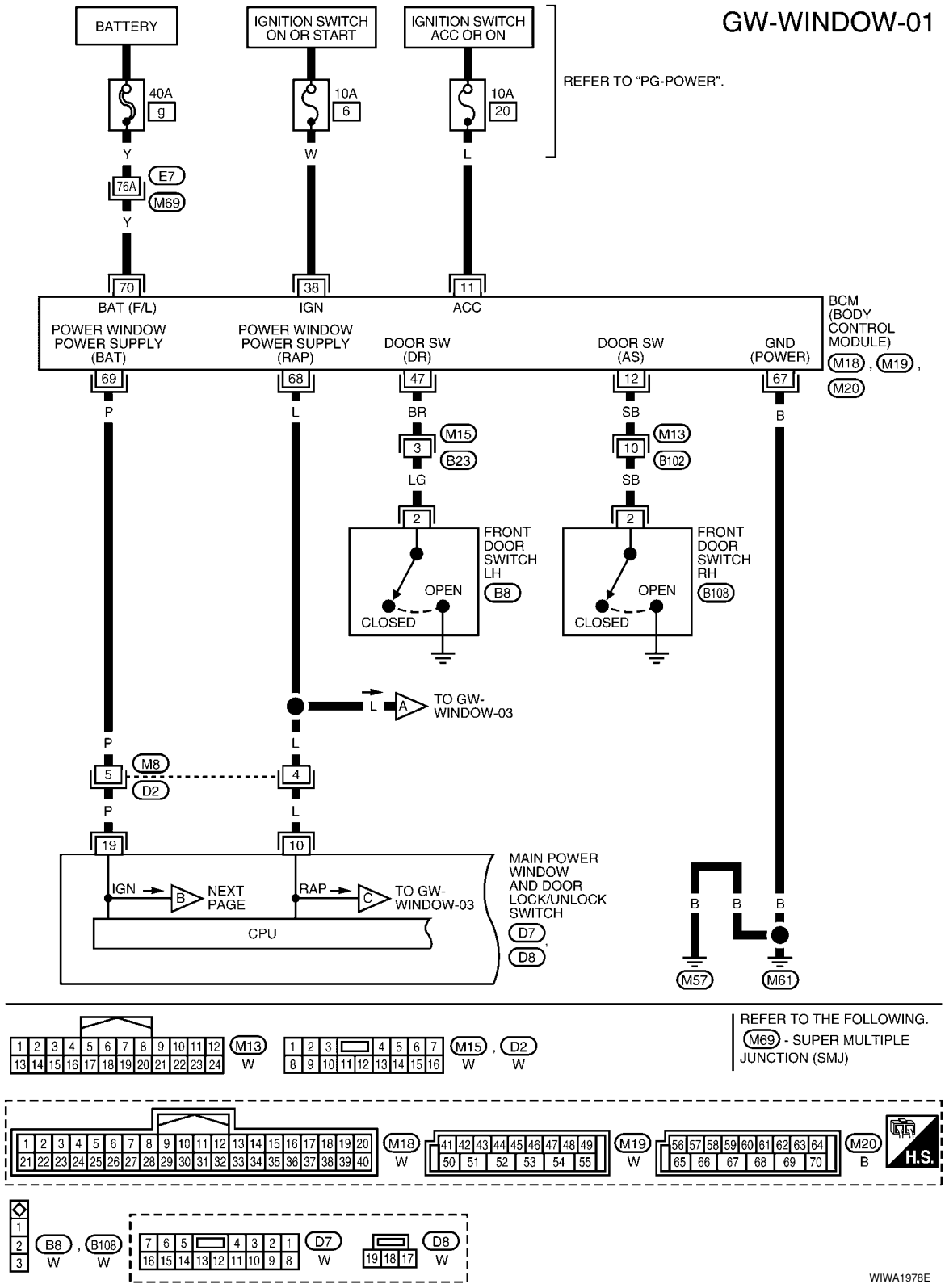

GW-WINDOW-02

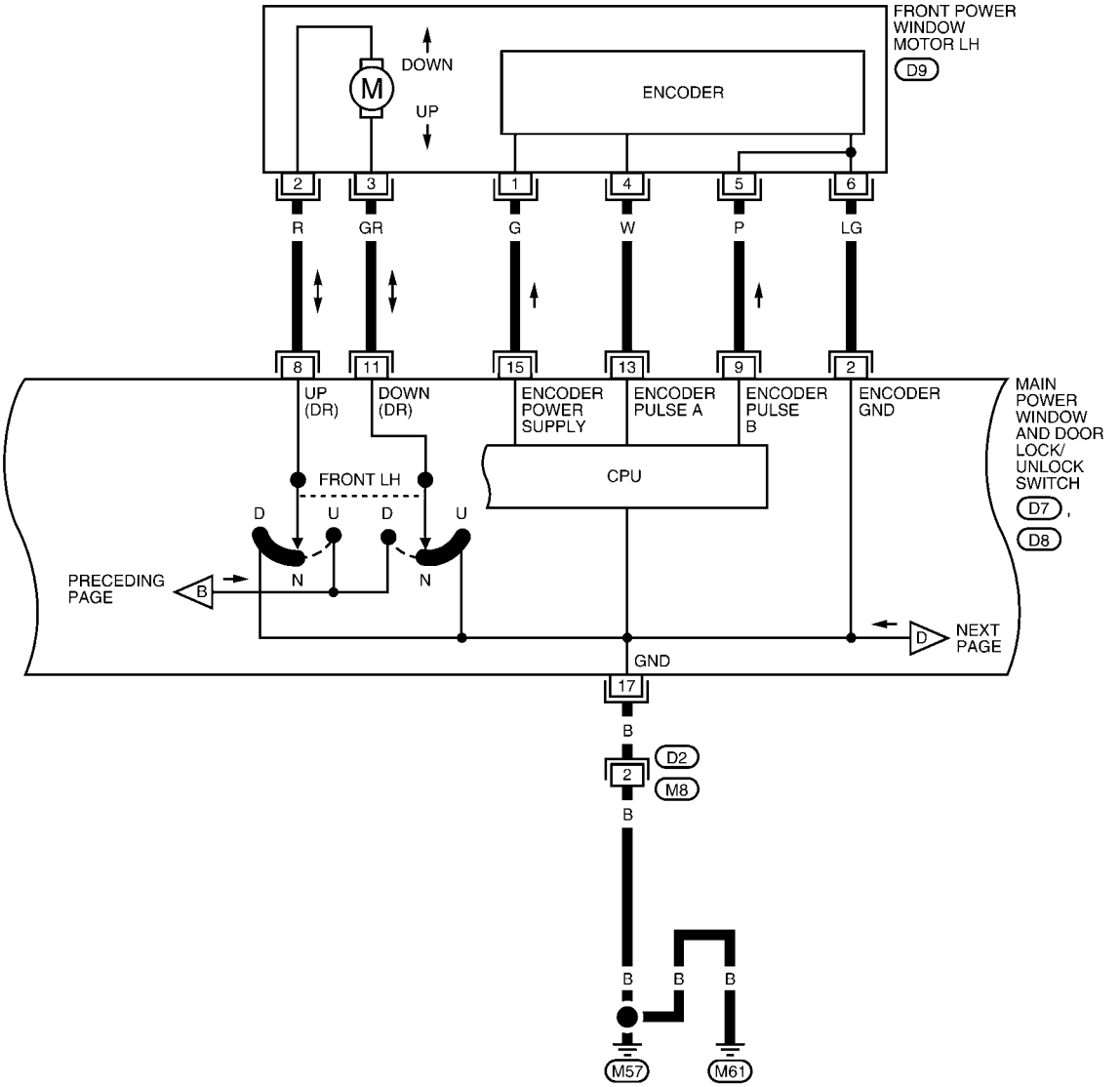

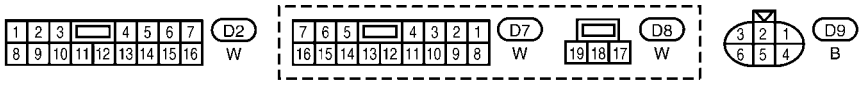

LIWA0556E

GW-WINDOW-03

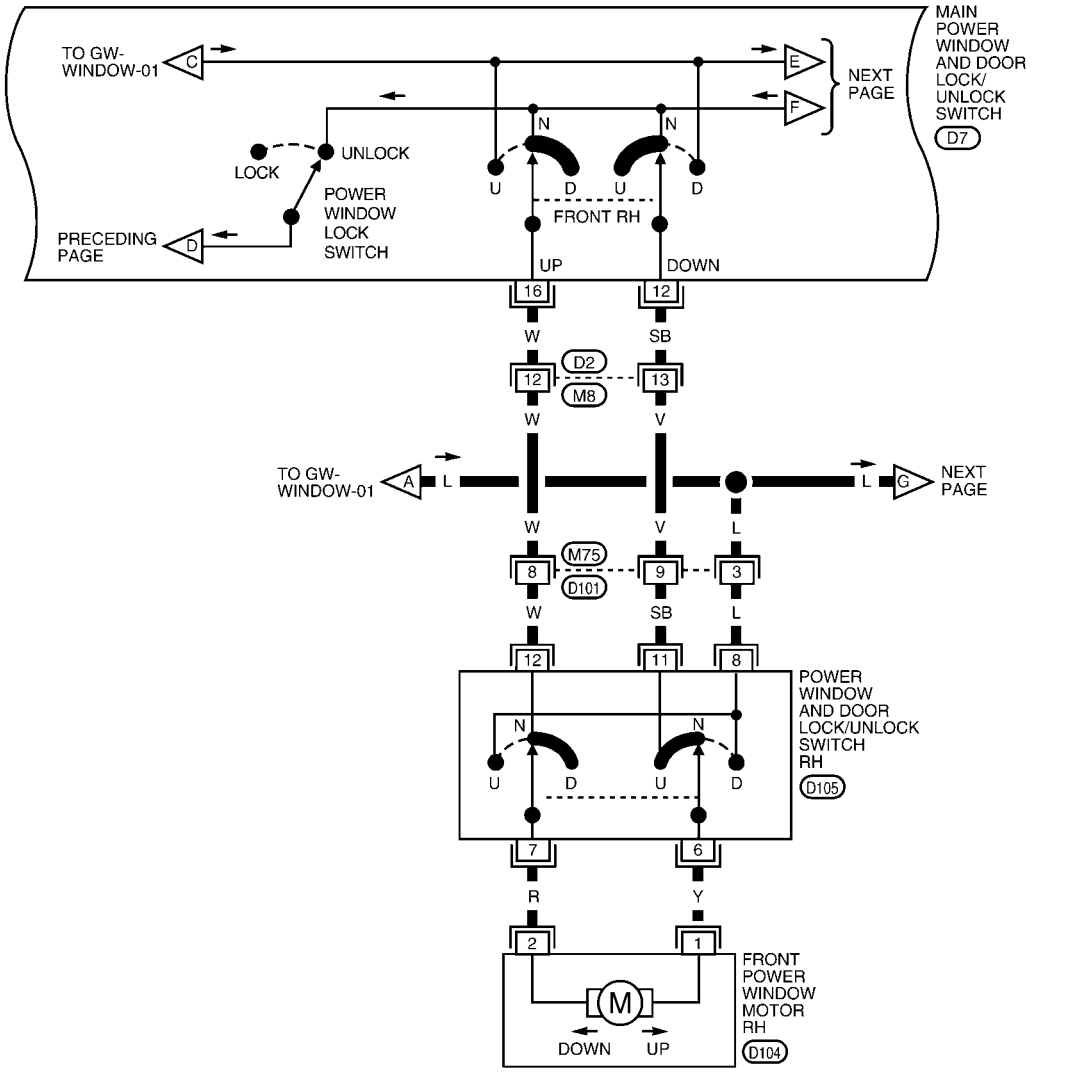

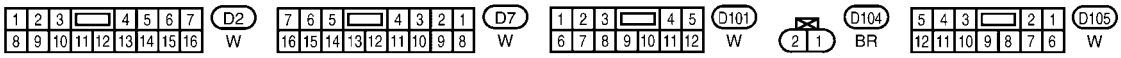

WIWA1979E

GW-WINDOW-04

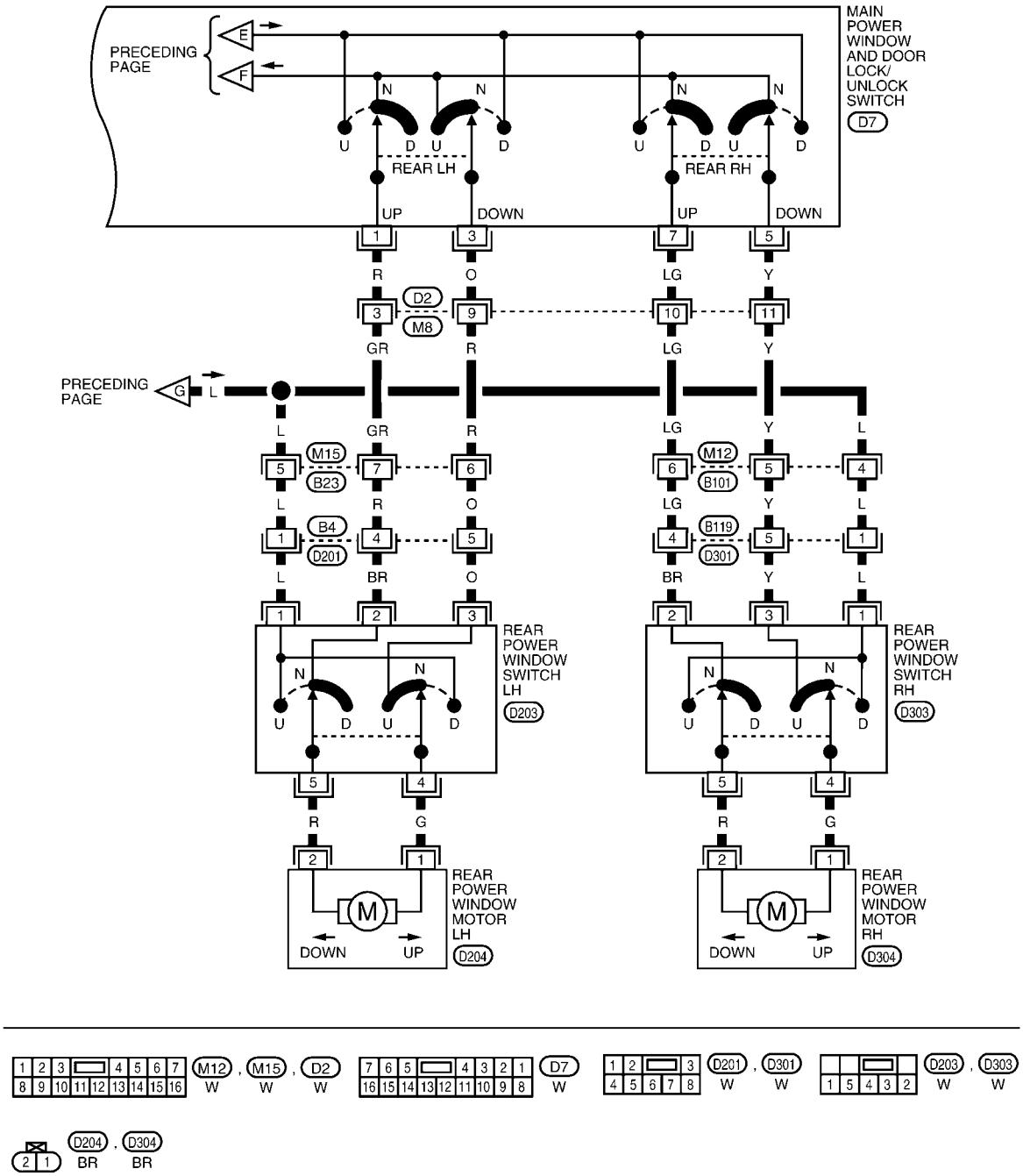

WIWA1980E

Main Power Window and Door Lock/Unlock Switch Harness Connector Terminal Lay-

out

INFOID:0000000001704143

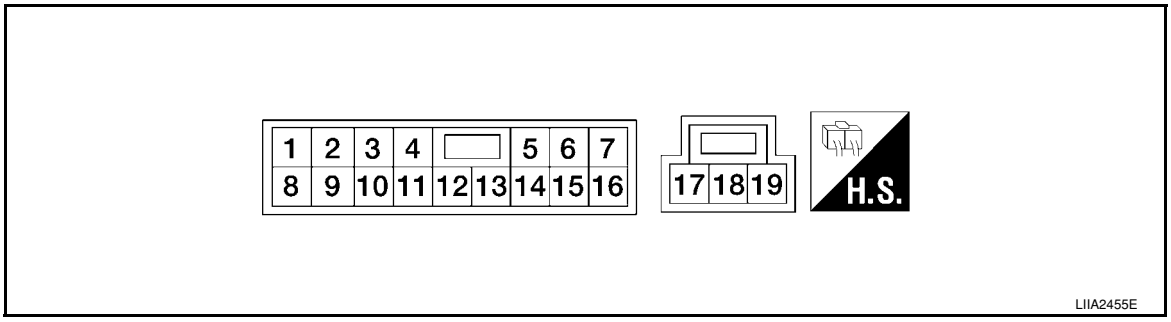

Terminal and Reference Value for Main Power Window and Door Lock/Unlock Switch

INFOID:0000000001704144

Terminal	Wire Color	Item	Condition	Voltage (V) (Approx.)
1	R	Rear power window LH UP signal	When rear LH switch in main power window and door lock/unlock switch is operated UP	Battery voltage
2	LG	Encoder ground	—	0
3	O	Rear power window LH DOWN signal	When rear LH switch in main power window and door lock/unlock switch is operated DOWN	Battery voltage
5	Y	Rear power window RH DOWN signal	When rear RH switch in main power window and door lock/unlock switch is operated DOWN	Battery voltage
7	LG	Rear power window RH UP signal	When rear RH switch in main power window and door lock/unlock switch is operated UP	Battery voltage
8	R	Front power window motor LH UP signal	When power window motor is operated UP	Battery voltage
9	P	Encoder pulse B signal	When power window switch operates	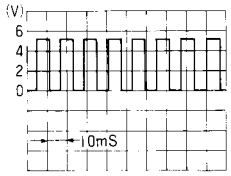 OCC3383D
10	L	RAP signal	When ignition switch ON	Battery voltage
			Within 45 seconds after ignition switch is turned to OFF	Battery voltage
			More than 45 seconds after ignition switch is turned to OFF	0
			When front door LH or RH open or power window timer operates	0
11	GR	Front power window motor LH DOWN signal	When power window motor is operated DOWN	Battery voltage
12	SB	Front power window motor RH DOWN signal	When power window motor is operated DOWN	Battery voltage

Terminal	Wire Color	Item	Condition	Voltage (V) (Approx.)
13	W	Encoder pulse A signal	When power window motor operates	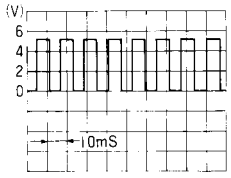 OCC3383D
15	G	Encoder power supply	When ignition switch ON or power window timer operates	10
16	W	Front power window motor LH UP signal	When power window motor is operated UP	Battery voltage
17	B	Ground	—	0
19	P	Battery power supply	—	Battery voltage

Terminal and Reference Value for BCM

INFOID:0000000001704145

Refer to BCS-11, "Terminal and Reference Value for BCM" .

Work Flow

INFOID:0000000001704146

1. Check the symptom and customer's requests.
2. Understand the outline of system. Refer to GW-18, "System Description" .
3. According to the trouble diagnosis chart, repair or replace the cause of the malfunction.
   Refer to GW-29, "Trouble Diagnosis Symptom Chart" .
4. Does power window system operate normally? If Yes, GO TO 5, If No, GO TO 3.
5. Inspection End.

CONSULT-III Function (BCM)

INFOID:0000000001704147

CONSULT-III can display each diagnostic item using the diagnostic test modes shown following.

BCM diagnostic test item	Diagnostic mode	Content
Inspection by part	WORK SUPPORT	Supports inspections and adjustments. Commands are transmitted to the BCM for setting the status suitable for required operation, input/output signals are received from the BCM and received data is displayed.
	DATA MONITOR	Displays BCM input/output data in real time.
	ACTIVE TEST	Operation of electrical loads can be checked by sending drive signal to them.
	SELF-DIAG RESULTS	Displays BCM self-diagnosis results.
	CAN DIAG SUPPORT MNTR	The results of transmit/receive diagnosis of CAN communication can be read.
	ECU PART NUMBER	BCM part number can be read.
	CONFIGURATION	Performs BCM configuration read/write functions.

ACTIVE TEST

Test Item	Description
RETAINED PWR	This test is able to supply RAP signal (power) from BCM (body control module) to power window system and power sunroof system (if equipped). Those systems can be operated when turning on “RETAINED PWR” on CONSULT-III screen even if the ignition switch is turned OFF. **NOTE:** During this test, CONSULT-III can be operated with ignition switch in OFF position. “RETAINED PWR” should be turned “ON” or “OFF” on CONSULT-III screen when ignition switch is ON. Then turn ignition switch OFF to check retained power operation. CONSULT-III might be stuck if “RETAINED PWR” is turned “ON” or “OFF” on CONSULT-III screen when ignition switch is OFF.

WORK SUPPORT

Work item	Description
RETAINED PWR	RAP signal's power supply period can be changed by mode setting. Selects RAP signal's power supply period between three steps • MODE1 (45 sec.)/MODE2 (OFF)/MODE3 (2 min.).

DATA MONITOR

Work item	Description
IGN ON SW	Indicates (ON/OFF) condition of ignition switch
DOOR SW-DR	Indicates (ON/OFF) condition of front door switch LH
DOOR SW-AS	Indicates (ON/OFF) condition of front door switch RH

Power Window Auto Operation Initialization

INFOID:0000000001871741

1. Turn the ignition switch ON.
2. Open the window—all the way DOWN.
3. Pull all the way UP on the switch and hold (close the window).
   • Continue holding the switch all the way UP for 4 seconds after the window is closed.
4. Confirm the window is now operating correctly.
   NOTE:
   • If the window is still not operating correctly, refer to GW-29, "Trouble Diagnosis Symptom Chart".
   • The above initialization procedure must be performed if any of the following occur:
   - Battery cable is disconnected
   - Power window switch connector is disconnected
   - Power window regulator is replaced
   - Power window motor is replaced
   - Window glass is removed
   - Window glass run rubber is replaced
   - Power window fuse is blown
   - Window is partly opened and/or closed many times without being fully closed.

Trouble Diagnosis Symptom Chart

INFOID:0000000001704148

Check that other systems using the signal of the following systems operate normally.

Symptom	Repair order	Refer to page
None of the power windows can be operated using any switch	1. BCM power supply and ground circuit check	BCS-15
	2. Main power window and door lock/unlock power supply and ground circuit check	GW-30
	3. Replace main power window and door lock/unlock switch	EI-32
Front power window LH alone does not operate	1. Front power window motor LH circuit check	GW-31
	2. Replace main power window and door lock/unlock switch	EI-32
Front power window RH does not operate from power window and door lock/unlock switch RH only	1. Front power window RH circuit check (power window and door lock/unlock switch RH operation)	GW-32
Front power window RH does not operate from main power window and door lock/unlock switch only	1. Replace main power window and door lock/unlock switch	EI-32
Front power window RH does not operate from any switch	1. Front power window motor RH circuit check	GW-32

Symptom	Repair order	Refer to page
Anti-pinch system does not operate normally (Front LH)	1. Door window sliding part malfunction • A foreign material adheres to window glass or glass run rubber. • Glass run rubber wear or deformation. • Sash is tilted too much, or not enough.	—
	2. Encoder circuit check	GW-34
Rear power window LH does not operate from rear power window switch LH only	1. Rear power window LH circuit check (rear power window switch LH operation)	GW-37
Rear power window LH does not operate from main power window and door lock/unlock switch only	1. Replace main power window and door lock/unlock switch	EI-32
Rear power window LH does not operate from any switch	1. Rear power window motor LH circuit check	GW-38
Rear power window RH does not operate from rear power window switch RH only	1. Rear power window RH circuit check (rear window switch RH operation)	GW-38
Rear power window RH does not operate from main power window and door lock/unlock switch only	1. Replace main power window and door lock/unlock switch	EI-32
Rear power window RH does not operate from any switch	1. Rear power window motor RH circuit check	GW-40
Power window retained power operation does not operate properly	1. Check the retained power operation mode setting.	GW-28
	2. Door switch check	GW-36
	3. Replace BCM.	BCS-18

BCM Power Supply and Ground Circuit Inspection

INFOID:0000000001704149

Refer to BCS-15, "BCM Power Supply and Ground Circuit Inspection" .

Main Power Window and Door Lock/Unlock Switch Power Supply and Ground Circuit Inspection

INFOID:0000000001704150

1.CHECK POWER SUPPLY CIRCUIT

1. Turn ignition switch ON.
2. Check voltage between main power window and door lock/unlock switch connector D7 terminal 10, D8 terminal 19 and ground.

10 - Ground : Battery voltage
19 - Ground : Battery voltage

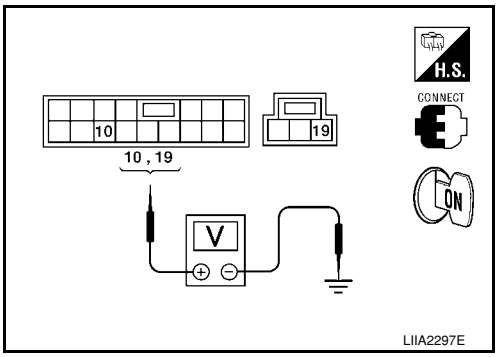

OK or NG

OK >> GO TO 2.
NG >> GO TO 3.

2.CHECK GROUND CIRCUIT

1. Turn ignition switch OFF.
2. Disconnect main power window and door lock/unlock switch.
3. Check continuity between main power window and door lock/unlock switch connector D8 terminal 17 and ground.

17 - Ground : Continuity should exist.

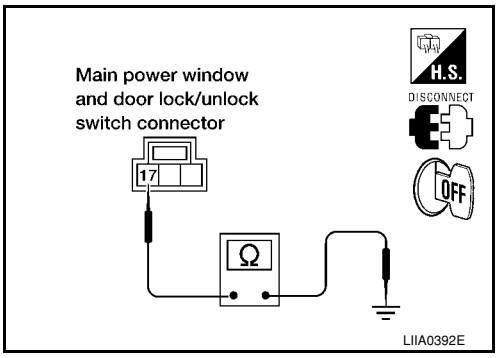

OK or NG

OK >> Power supply and ground circuit are OK.
NG >> Repair or replace harness.

3.CHECK MAIN POWER WINDOW AND DOOR LOCK/UNLOCK SWITCH POWER SUPPLY CIRCUIT

1. Turn ignition switch OFF.
2. Disconnect BCM and main power window and door lock/unlock switch.
3. Check continuity between BCM connector and main power window and door lock/unlock switch connectors.

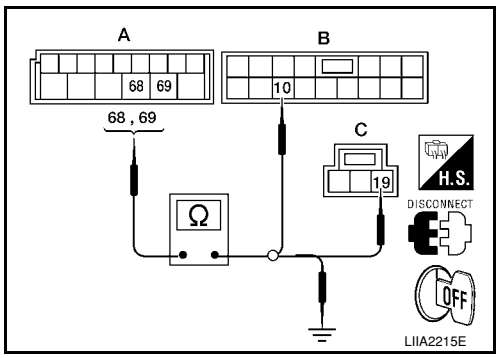

Connector	Terminal	Connector	Terminal	Continuity
A		B		
BCM: M20	68	Main power window and door lock/unlock switch: D7	10	Yes
	69	C	19	Yes
		Main power window and door lock/unlock switch: D8		

4. Check continuity between BCM and ground.

Connector	Terminal	Ground	Continuity
A			
BCM: M20	68		No
	69		No

OK or NG

OK >> GO TO 4.
NG >> Repair or replace harness.

4. CHECK BCM OUTPUT SIGNAL

1. Connect BCM.
2. Turn ignition switch ON.
3. Check voltage between BCM connector M20 terminals 68, 69 and ground.

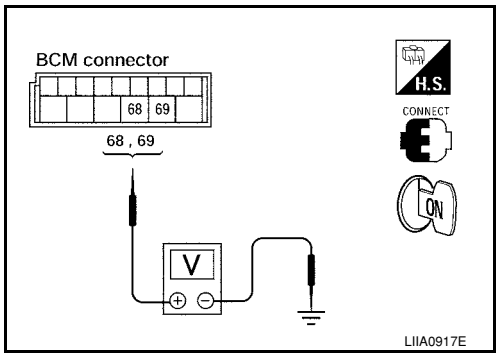

68 - Ground : Battery voltage
69 - Ground : Battery voltage

OK or NG

OK >> Check the condition of the harness and the connector.
NG >> Replace BCM. Refer to BCS-18, "Removal and Installation of BCM" .

Front Power Window Motor LH Circuit Inspection

INFOID:0000000001704151

1. CHECK MAIN POWER WINDOW AND DOOR LOCK/UNLOCK SWITCH OUTPUT SIGNAL

1. Turn ignition switch OFF.
2. Check voltage between main power window and door lock/unlock switch connector D7 terminals 8, 11 and ground.

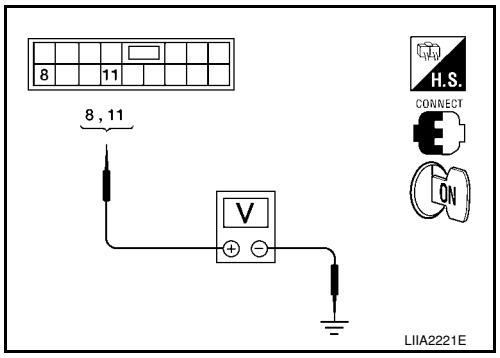

Connector	Terminals (+)	Terminals (-)	Condition	Voltage (V) (Approx.)
D7	8	Ground	UP	Battery voltage
			DOWN	0
	11		UP	0
			DOWN	Battery voltage

OK or NG

OK >> GO TO 2.

NG >> Replace main power window and door lock/unlock switch. Refer to EI-32, "Removal and Installation" .

2. CHECK POWER WINDOW MOTOR CIRCUIT

1. Turn ignition switch OFF.
2. Disconnect main power window and door lock/unlock switch and front power window motor LH.
3. Check continuity between main power window and door lock/unlock switch connector and front power window motor LH connector.

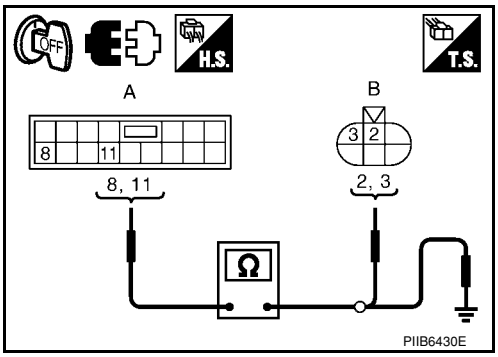

Connector	Terminal	Connector	Terminal	Continuity
A		B		
Main power window and door lock/unlock switch: D7	8	Front power window motor LH: D9	2	Yes
	11		3	Yes

4. Check continuity between main power window and door lock/unlock switch connector and ground.

Connector	Terminal	Ground	Continuity
A			
Main power window and door lock/unlock switch: D7	8		No
	11		No

OK or NG

OK >> Replace front power window motor LH. Refer to GW-42 .
NG >> Repair or replace harness.

Front Power Window RH Circuit Inspection (Power Window and Door Lock/Unlock Switch RH Operation)

INFOID:0000000001704152

1. CHECK POWER SUPPLY CIRCUIT

1. Turn ignition switch ON.
2. Check voltage between power window and door lock/unlock switch RH connector D105 terminal 8 and ground.

8 - Ground : Battery voltage

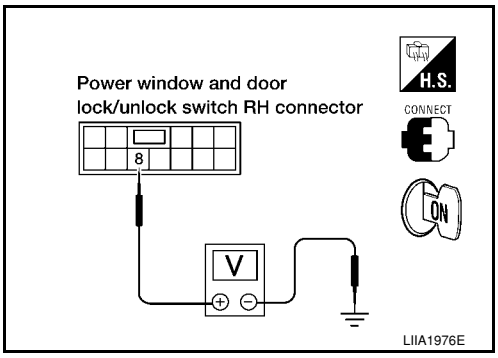

OK or NG

OK >> Replace power window and door lock/unlock switch RH. Refer to EI-32, "Removal and Installation" .
NG >> Repair or replace harness.

Front Power Window Motor RH Circuit Inspection

INFOID:0000000001704153

1. CHECK POWER WINDOW AND DOOR LOCK/UNLOCK SWITCH RH OUTPUT SIGNAL

1. Turn ignition switch OFF.
2. Disconnect front power window motor RH.
3. Turn ignition switch ON.
4. Check voltage between front power window motor RH connector and ground.

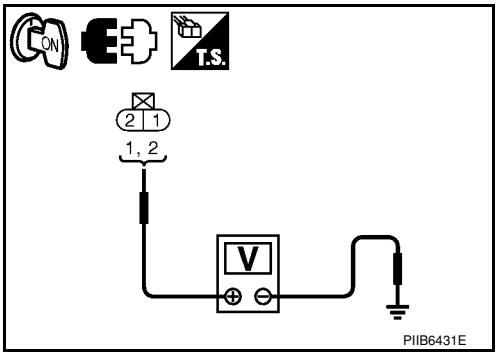

Connector	Terminals (+)	Terminals (-)	Condition	Voltage (V) (Approx.)
Front power window motor RH: D104	1	Ground	UP	0
			DOWN	Battery voltage
	2		UP	Battery voltage
			DOWN	0

OK or NG

OK >> Replace front power window motor RH. Refer to GW-42 .
NG >> GO TO 2.

2. CHECK FRONT POWER WINDOW MOTOR RH CIRCUIT

1. Turn ignition switch OFF.
2. Disconnect power window and door lock/unlock switch RH.
3. Check continuity between rear power window switch RH connector D105 (A) terminals 6, 7 and rear power window motor RH connector D104 (B) terminals 1, 2.

6 - 1 : Continuity should exist.
7 - 2 : Continuity should exist.

4. Check continuity between power window and door lock/unlock switch RH connector D105 (A) terminals 6, 7 and ground.

6 - Ground : Continuity should not exist.
7 - Ground : Continuity should not exist.

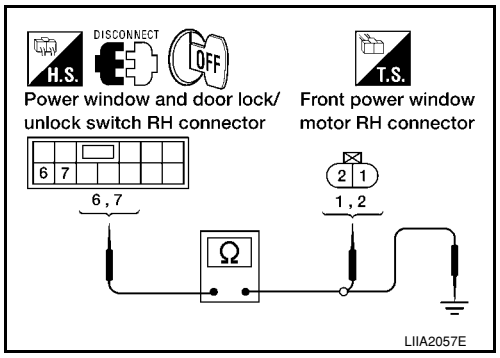

OK or NG

OK >> GO TO 3.
NG >> Repair or replace harness.

3. CHECK POWER WINDOW AND DOOR LOCK/UNLOCK SWITCH RH

1. Disconnect power window and door lock/unlock switch RH.
2. Check continuity between power window and door lock/unlock switch RH terminals.

	Terminals		Condition	Continuity
Power window and door lock/unlock switch RH	6	11	DOWN	No
			Other than above	Yes
	7	12	UP	No
			Other than above	Yes

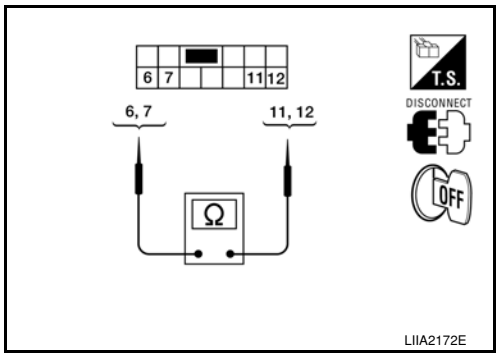

OK or NG

OK >> GO TO 4.
NG >> Replace power window and door lock/unlock switch RH. Refer to EI-32, "Removal and Installation" .

4. CHECK POWER WINDOW AND DOOR LOCK/UNLOCK SWITCH RH CIRCUIT

1. Disconnect main power window and door lock/unlock switch.
2. Check continuity between power window main switch connector and power window and door lock/unlock switch RH connector.

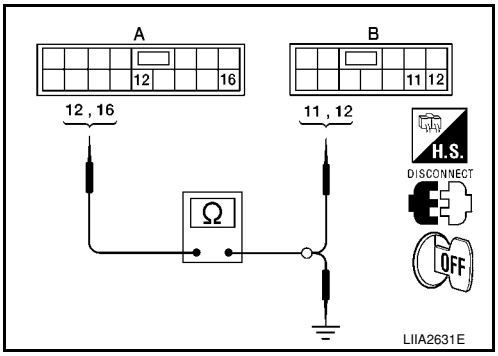

Connector	Terminal	Connector	Terminal	Continuity
A		B		
Main power window and door lock/unlock switch: D7	12	Power window and door lock/unlock switch RH: D105	11	Yes
	16		12	

3. Check continuity power window main switch connector and ground.

Connector	Terminal	Ground	Continuity
A			
Main power window and door lock/unlock switch: D7	12	Ground	No
	16		

OK or NG

OK >> Replace main power window and door lock/unlock switch. Refer to EI-32, "Removal and Installation" .

NG >> Repair or replace harness.

Encoder Circuit Inspection

INFOID:0000000001704154

1. CHECK FRONT POWER WINDOW MOTOR LH POWER SUPPLY

1. Turn ignition switch OFF.
2. Disconnect front power window motor LH.
3. Turn ignition switch ON.
4. Check voltage between front power window motor LH connector D9 terminal 1 and ground.

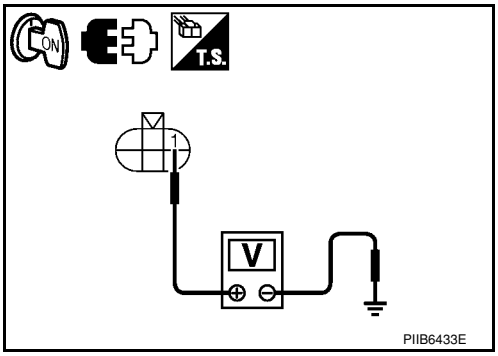

1 - Ground : Approx. 10V

OK or NG

OK >> GO TO 3.

NG >> GO TO 2.

2. CHECK HARNESS CONTINUITY

1. Turn ignition switch OFF.
2. Disconnect main power window and door lock/unlock switch.
3. Check continuity between front power window motor LH connector and main power window and door lock/unlock switch connector.

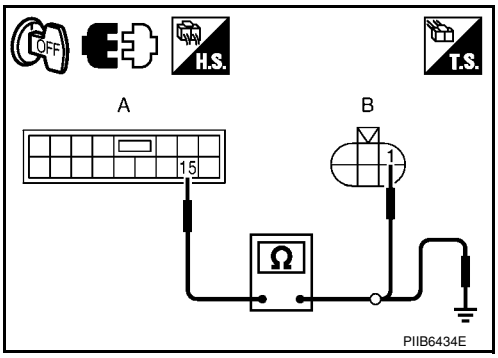

Connector	Terminal	Connector	Terminal	Continuity
A		B		
Main power window and door lock/unlock switch: D7	15	Front power window motor LH: D9	1	Yes

4. Check continuity between front power window motor LH connector and ground.

Connector	Terminal	Ground	Continuity
B			
Front power window motor LH: D9	15		No

OK or NG

OK >> Replace main power window and door lock/unlock switch. Refer to EI-32, "Removal and Installation" .

NG >> Repair or replace harness.

3. CHECK ENCODER GROUND

1. Turn ignition switch OFF.
2. Check continuity between front power window motor LH connector D9 terminal 6 and ground.

6 - Ground : Continuity should exist.

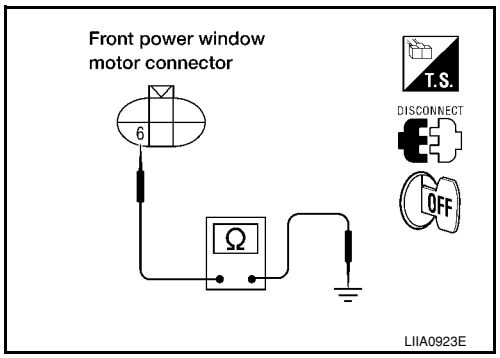

OK or NG

OK >> GO TO 5.

NG >> GO TO 4.

4. CHECK ENCODER GROUND CIRCUIT

1. Disconnect main power window and door lock/unlock switch.
2. Check continuity between front power window motor LH connector D9 terminal 6 and main power window and door lock/unlock switch connector D7 terminal 2.

6 - 2 : Continuity should exist.

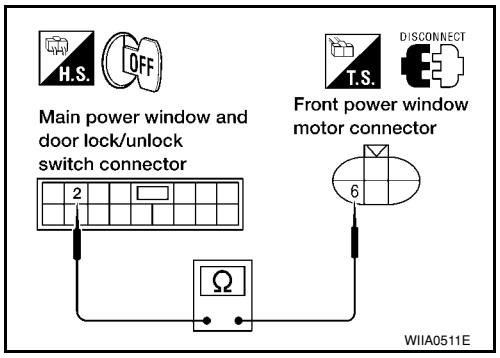

OK or NG

OK >> Replace main power window and door lock/unlock switch. Refer to EI-32, "Removal and Installation" .

NG >> Repair or replace harness.

5. CHECK ENCODER PULSE A SIGNAL

1. Connect front power window motor LH.
2. Turn ignition switch ON.
3. Check the signal between main power window and door lock/unlock switch connector and ground with oscilloscope.

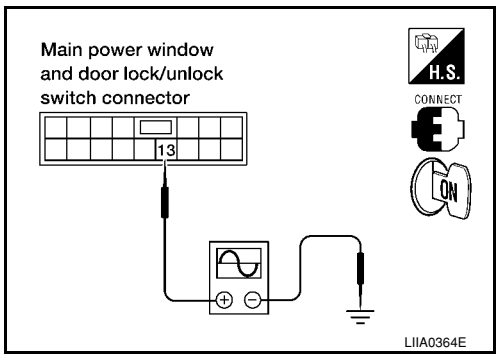

Connector	Terminals (+)	Terminals (-)	Condition	Signal
D7	13	Ground	Opening	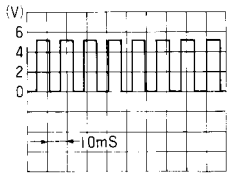 OCC3383D

OK or NG

OK >> Replace main power window and door lock/unlock switch. Refer to EI-32, "Removal and Installation" .

NG >> GO TO 6.

6. CHECK ENCODER PULSE B SIGNAL

Check the signal between main power window and door lock/unlock switch connector and ground with oscilloscope.

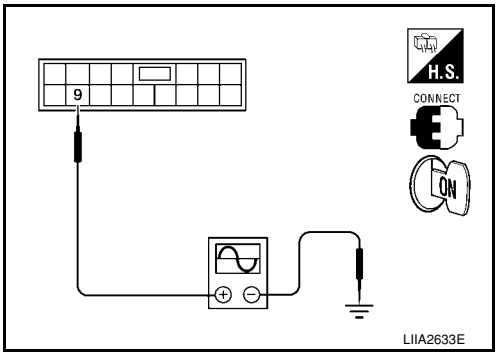

Connector	Terminals (+)	Terminals (-)	Condition	Signal
D7	9	Ground	Opening	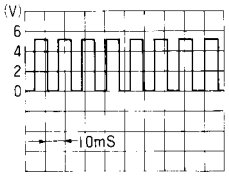 OCC3383D

OK or NG

OK >> Replace main power window and door lock/unlock switch. Refer to EI-32, "Removal and Installation" .

NG >> GO TO 7.

7. CHECK ENCODER CIRCUIT

1. Turn ignition switch OFF.
2. Disconnect front power window motor LH and main power window and door lock/unlock switch.
3. Check continuity between front power window motor LH connector and main power window and door lock/unlock switch connector.

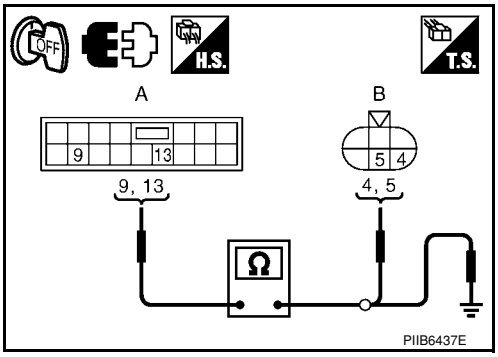

Connector A	Terminal	Connector B	Terminal	Continuity
Main power window and door lock/unlock switch: D7	9	Front power window motor LH: D9	5	Yes
	13		4	

4. Check continuity between front power window motor LH connector and ground.

Connector A	Terminal	Ground	Continuity
Main power window and door lock/unlock switch: D7	9	Ground	No
	13		

OK or NG

OK >> Replace front power window motor LH. Refer to GW-42 .

NG >> Repair or replace harness.

Door Switch Check

INFOID:0000000001704155

1. CHECK FRONT DOOR SWITCH INPUT SIGNAL

With CONSULT-III

Check front door switches (“DOOR SW-DR” and “DOOR SW-AS”) in “DATA MONITOR” mode with CONSULT-III.

Monitor item	Condition
DOOR SW-DR	OPEN: ON
	CLOSE: OFF
DOOR SW-AS	OPEN: ON
	CLOSE: OFF

Without CONSULT-III

Check voltage between BCM connector and ground.

Item	Connector	Terminals (+)	Terminals (-)	Condition	Voltage (V) (Approx.)
Front RH	M18	12	Ground	OPEN	0
				CLOSE	Battery voltage
Front LH	M19	47		OPEN	0
				CLOSE	Battery voltage

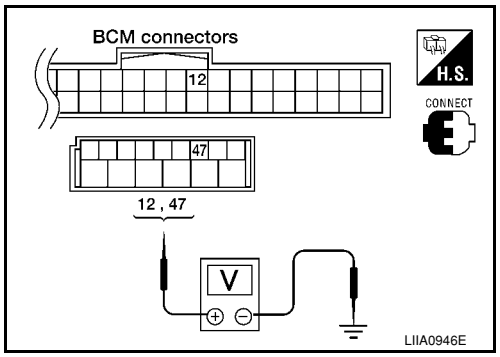

OK or NG

OK >> Front door switch is OK.
NG >> GO TO 2.

2. CHECK FRONT DOOR SWITCH CIRCUIT

1. Turn ignition switch OFF.
2. Disconnect front door switch LH or RH and BCM.
3. Check continuity between front door switch connector B8 (LH) or B108 (RH) terminal 2 and BCM connector M19 terminal 47 (LH) or connector M18 terminal 12 (RH).

Front LH

2 - 47 : Continuity should exist.

Front RH

2 - 12 : Continuity should exist.

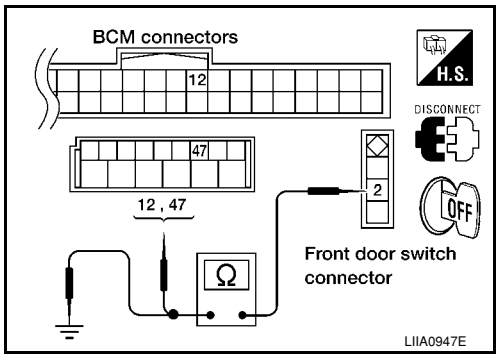

4. Check continuity between front door switch connector B8 (LH) or B108 (RH) terminal 2 and ground.

2 - Ground : Continuity should not exist.

OK or NG

OK >> GO TO 3.
NG >> Repair or replace harness.

3. CHECK DOOR SWITCH

Check continuity between each front door switch terminal 2 and body ground part of front door switch.

Terminal		Door switch	Continuity
2	Body ground part of front door switch	Pushed	No
		Released	Yes

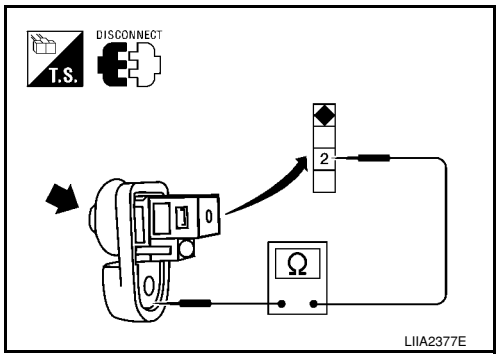

OK or NG

OK >> Replace BCM. Refer to BCS-18, "Removal and Installation of BCM" .
NG >> Replace malfunctioning front door switch.

Rear Power Window LH Circuit Inspection (Rear Power Window Switch LH Operation)

INFOID:0000000001704156

1. CHECK POWER SUPPLY

1. Turn ignition switch ON.
2. Check voltage between rear power window switch LH connector D203 terminal 1 and ground.

1 - Ground : Battery voltage

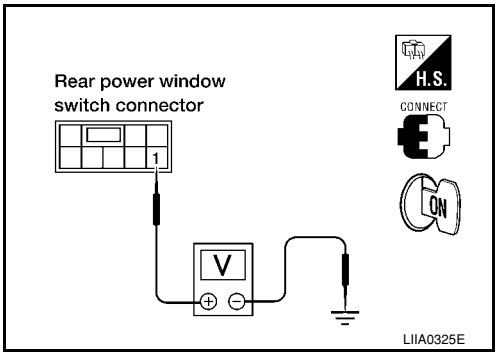

OK or NG

OK >> Replace rear power window switch LH. Refer to EI-32, "Removal and Installation" .

NG >> Repair or replace harness.

Rear Power Window RH Circuit Inspection (Rear Power Window Switch RH Operation)

INFOID:0000000001704157

1.CHECK POWER SUPPLY

1. Turn ignition switch ON.
2. Check voltage between rear power window switch RH connector D303 terminal 1 and ground.

1 - Ground : Battery voltage

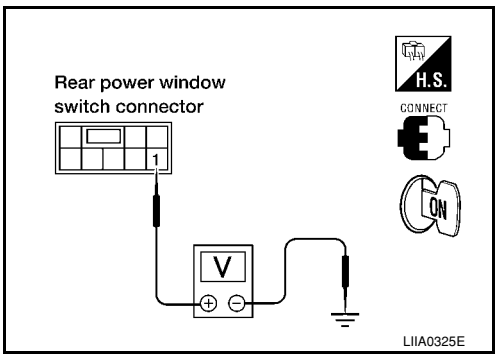

OK or NG

OK >> Replace rear power window switch RH. Refer to EI-32, "Removal and Installation" .

NG >> Repair or replace harness.

Rear Power Window Motor LH Circuit Inspection

INFOID:0000000001704158

1.CHECK REAR POWER WINDOW SWITCH LH OUTPUT SIGNAL

1. Turn ignition switch OFF.
2. Disconnect rear power window motor LH.
3. Turn ignition switch ON.
4. Check voltage between rear power window motor LH connector and ground.

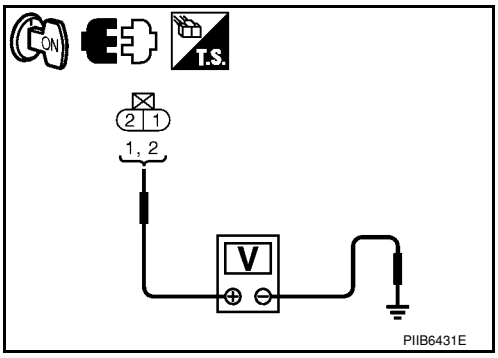

Connector	Terminals		Condition	Voltage (V) (Approx.)
	(+)	(-)		
Rear power window motor LH: D204	1	Ground	UP	0
			DOWN	Battery voltage
	2		UP	Battery voltage
			DOWN	0

OK or NG

OK >> Replace rear power window motor LH. Refer to GW-46 .

NG >> GO TO 2.

2.CHECK REAR POWER WINDOW MOTOR LH CIRCUIT

1. Turn ignition switch OFF.
2. Disconnect rear power window switch LH.
3. Check continuity between rear power window switch LH connector D203 (A) terminals 4, 5 and rear power window motor LH connector D204 (B) terminals 1, 2.

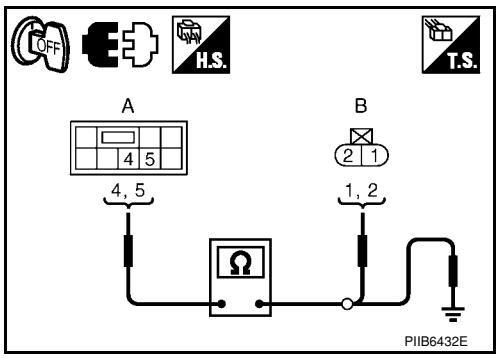

4 - 1 : Continuity should exist.
5 - 2 : Continuity should exist.

4. Check continuity between rear power window switch LH connector D203 (A) terminals 4, 5 and ground.

4 - Ground : Continuity should not exist.
5 - Ground : Continuity should not exist.

OK or NG

OK >> GO TO 3.
NG >> Repair or replace harness.

3. CHECK POWER WINDOW SWITCH

1. Disconnect rear power window switch LH.
2. Check continuity between rear power window switch LH terminals.

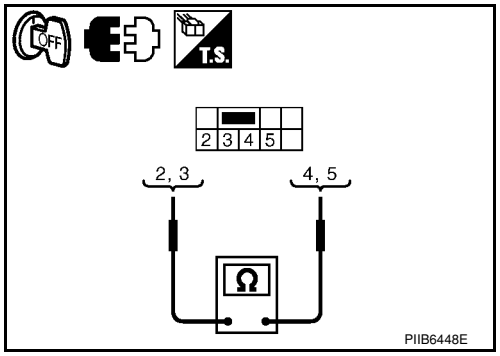

	Terminals		Condition	Continuity
Rear power window switch LH	2	5	UP	No
			Other than above	Yes
	3	4	DOWN	No
			Other than above	Yes

OK or NG

OK >> GO TO 4.
NG >> Replace rear power window switch LH. Refer to EI-32, "Removal and Installation" .

4. CHECK REAR POWER WINDOW SWITCH LH CIRCUIT

1. Disconnect main power window and door lock/unlock switch.
2. Check continuity between power window main switch connector and rear power window switch LH connector.

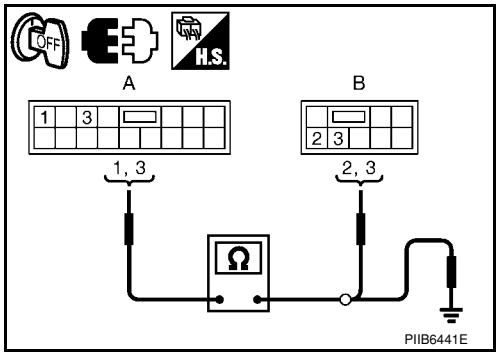

Connector A	Terminal	Connector B	Terminal	Continuity
Main power window and door lock/unlock switch: D7	1	Rear power window switch LH: D203	2	Yes
	3		3	

3. Check continuity power window main switch connector and ground.

Connector A	Terminal	Ground	Continuity
Main power window and door lock/unlock switch: D7	1	Ground	No
	3		

OK or NG

OK >> Replace main power window and door lock/unlock switch. Refer to EI-32, "Removal and Installation" .

NG >> Repair or replace harness.

Rear Power Window Motor RH Circuit Inspection

INFOID:0000000001704159

1. CHECK REAR POWER WINDOW SWITCH RH OUTPUT SIGNAL

1. Turn ignition switch OFF.
2. Disconnect rear power window motor RH.
3. Turn ignition switch ON.
4. Check voltage between rear power window motor RH connector and ground.

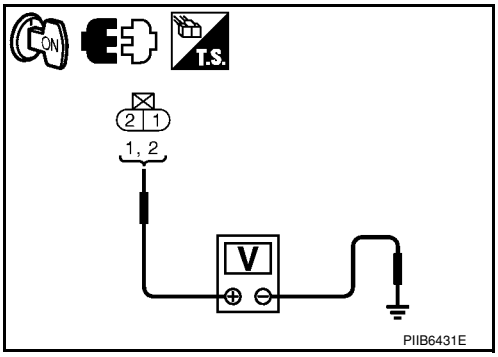

Connector	Terminals (+)	Terminals (-)	Condition	Voltage (V) (Approx.)
Rear power window motor RH: D304	1	Ground	UP	0
			DOWN	Battery voltage
	2		UP	Battery voltage
			DOWN	0

OK or NG

OK >> Replace rear power window motor RH. Refer to GW-46 .
NG >> GO TO 2.

2. CHECK REAR POWER WINDOW MOTOR RH CIRCUIT

1. Turn ignition switch OFF.
2. Disconnect rear power window switch RH.
3. Check continuity between rear power window switch RH connector D303 (A) terminals 4, 5 and rear power window motor RH connector D304 (B) terminals 1, 2.

4 - 1 : Continuity should exist.
5 - 2 : Continuity should exist.

4. Check continuity between rear power window switch RH connector D303 (A) terminals 4, 5 and ground.

4 - Ground : Continuity should not exist.
5 - Ground : Continuity should not exist.

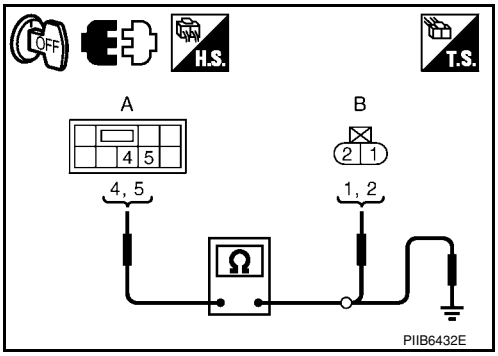

OK or NG

OK >> GO TO 3.
NG >> Repair or replace harness.

3. CHECK POWER WINDOW SWITCH

1. Disconnect rear power window switch RH.
2. Check continuity between rear power window switch RH terminals.

	Terminals		Condition	Continuity
Rear power window switch RH	2	5	UP	No
			Other than above	Yes
	3	4	DOWN	No
			Other than above	Yes

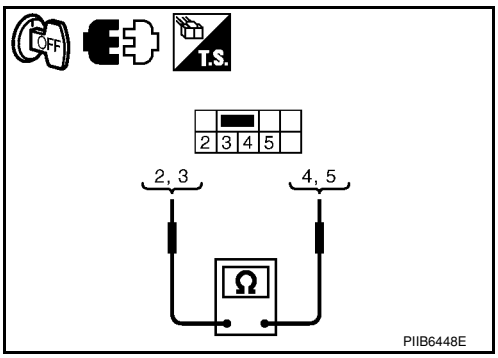

OK or NG

OK >> GO TO 4.
NG >> Replace rear power window switch RH. Refer to EI-32, "Removal and Installation" .

4. CHECK REAR POWER WINDOW SWITCH RH CIRCUIT

1. Disconnect main power window and door lock/unlock switch.
2. Check continuity between power window main switch connector and rear power window switch RH connector.

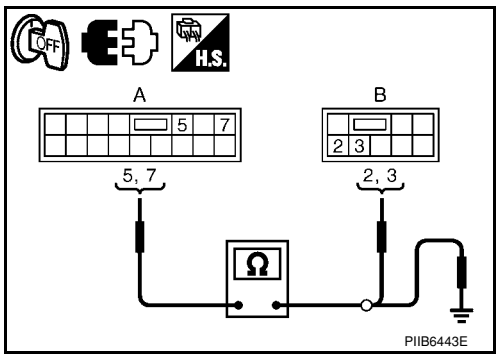

Connector	Terminal	Connector	Terminal	Continuity
A		B		
Main power window and door lock/unlock switch D7	5	Rear power window switch RH D303	3	Yes
	7		2	

3. Check continuity power window main switch connector and ground.

Connector	Terminal	Ground	Continuity
A			
Main power window and door lock/unlock switch D7	5	Ground	No
	7		

OK or NG

OK >> Replace main power window and door lock/unlock switch. Refer to EI-32, "Removal and Installation" .

NG >> Repair or replace harness.

FRONT DOOR GLASS AND REGULATOR

Removal and Installation

INFOID:0000000001704160

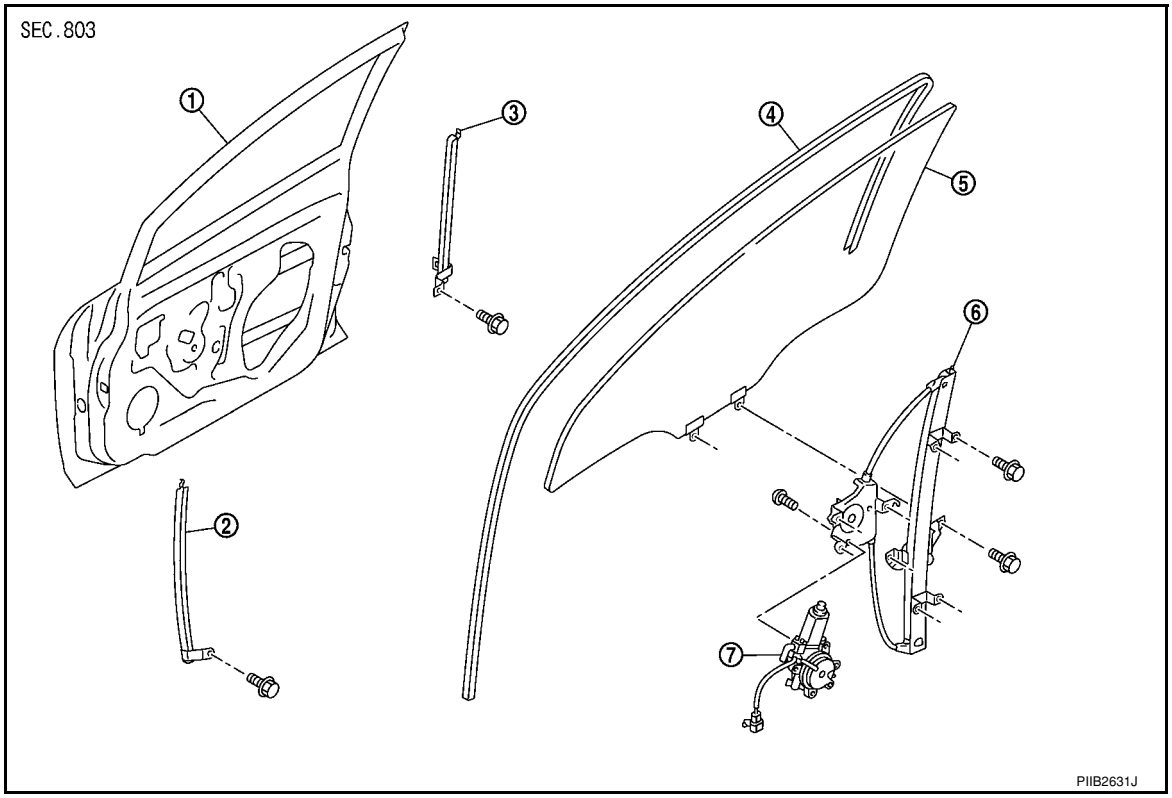

1. Door panel
2. Lower sash (front)
3. Lower sash (rear)
4. Door glass run
5. Door glass
6. Regulator assembly
7. Power window motor (if equipped)

DOOR GLASS

Removal

1. Remove the front door finisher. Refer to EI-32, "Removal and Installation".
2. Disconnect the front door speaker electrical connector.
3. Position aside the sealing screen.
   NOTE:
   If sealing the screen is reused, cut the butyl-tape so that a part of butyl-tape remains on the sealing screen.
4. If equipped, reconnect the power window switch electrical connector. Operate the power window main switch to raise/lower the door window until the glass bolts can be seen.
5. Remove the door glass bolts.

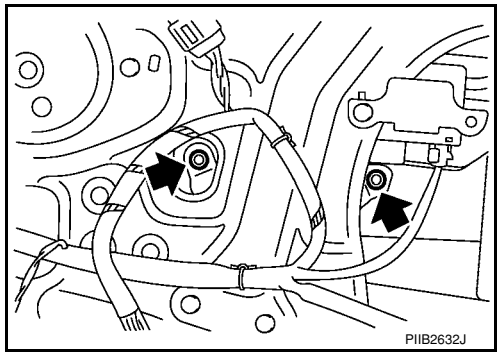

6. While holding the door window, raise it at the rear end to pull the glass out of the sash toward the outside of the door.

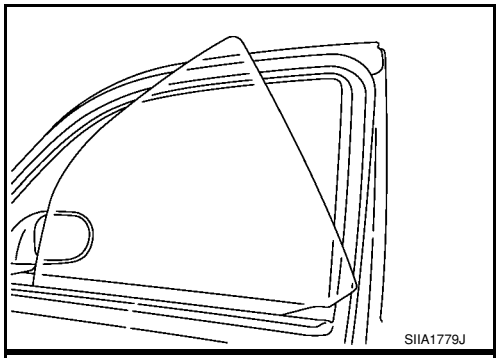

7. Remove the lower sash (rear) bolt, move the lower end portion ahead of the door panel.(3) and pull out the insertion (2) of the upper end from the door panel to remove the lower sash (rear)(1).

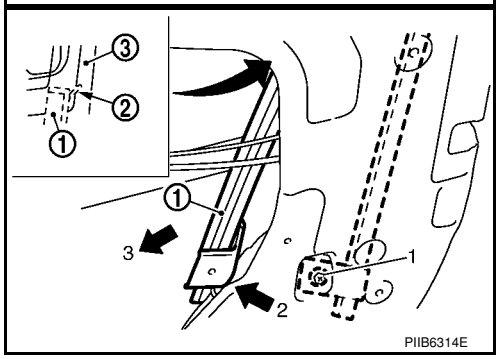

8. Remove the lower sash (front) bolt and pull out the lower sash (front) just downward to remove it.
9. Remove the door glass run from the door panel.

Installation

Installation is in the reverse order of removal.

REGULATOR ASSEMBLY

Removal

1. Remove the front door finisher. Refer to EI-32, "Removal and Installation".
2. Disconnect the harness connector of front speaker, and then remove sealing screen.
   NOTE:
   If sealing screen is reused, cut the butyl-tape so that a part of butyl-tape remains on the sealing screen.
3. If equipped, reconnect the power window switch electrical connector. Operate the power window main switch to raise/lower the door window until the door glass bolts can be seen.
4. Remove the door glass bolts.

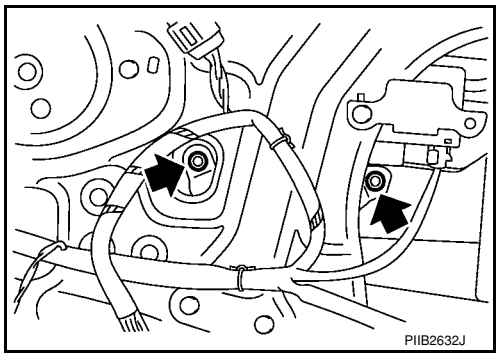

5. Raise the door glass and hold with a suction lifter A.

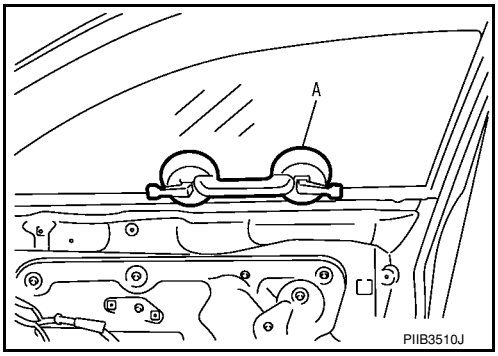

6. If equipped, disconnect the harness connector from the regulator assembly.
7. Remove the door glass bolts, and then remove the regulator assembly.

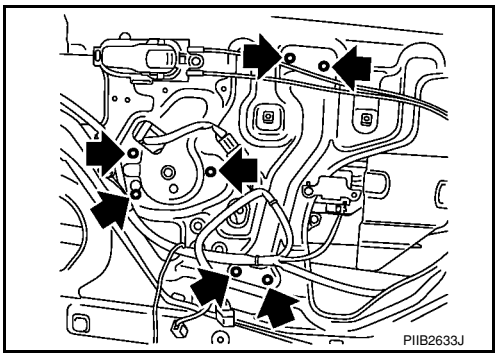

Installation
Installation is in the reverse order of removal.

Inspection after Removal
Check the regulator assembly for the following. [If a problem is detected, grease or replace it as shown].
- Wire wear
- Regulator deformation
- Grease condition for each sliding part

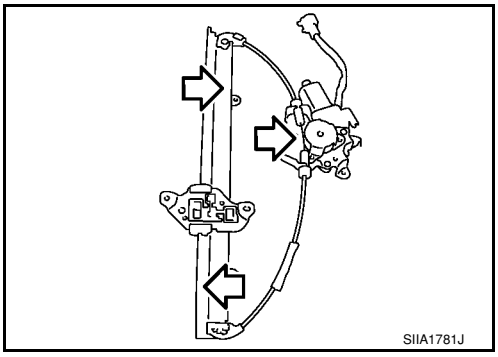

Disassembly and Assembly

INFOID:0000000001704161

POWER WINDOW REGULATOR ASSEMBLY

Disassembly
Remove the power window motor from the regulator assembly.

Assembly
Assembly is in the reverse order of disassembly.

Inspection after Installation

INFOID:0000000001704162

POWER WINDOW SYSTEM INITIALIZATION

If any of the following work has been done, initialize the system.
- Electric power supply to power window switch or motor is interrupted by blown fuse or disconnecting battery cable, etc.
- Removal and installation of the regulator assembly.
- Removal and installation of the motor from the regulator assembly.
- Removal and installation of the harness connector of the power window switch.
- Operate the regulator assembly as a unit.

- Removal and installation of the door glass.
- Removal and installation of the door glass run.

Initialization

After installing each component to the vehicle, follow the steps below.

1. Disconnect the battery negative cable or disconnect power window switch's harness connector temporarily, then reconnect after at least 1 minute.
2. Turn ignition switch ON.
3. Open the window to its full width by operating the power window switch. (Exclude this procedure if the window is already fully opened).
4. Move the power window switch in the up direction (auto close position) and hold. Keep holding the switch even when window is completely closed, and then release after 3 seconds have passed.
5. Inspection of the anti-pinch system function.
   NOTE:
   Initialization may be cancelled with continuous opening and closing operation. In this case, initialize the system.

INSPECT THE FUNCTION OF THE ANTI-PINCH SYSTEM

1. Fully open the door glass.
2. Place a wooden piece (wooden hammer handle, etc.) near the fully closed position.
3. Carry out fully closing operation with auto up switch.

- Check that the glass reverses without pinching the wooden piece, is lowered approx.150 mm (5.91 in) or for 2 seconds and then stops.
- The glass should not be raised with power window main switch while it is reversing or lowering.

CAUTION:

- **Use care to avoid being pinched during the inspection. Do not use a hand, etc. in place of the wooden piece during the inspection.**
- **Check that auto up function is normal before inspection, following the system initialization.**

FITTING INSPECTION

- Make sure the glass is securely fit into the glass run groove.
- Lower the glass slightly [approx. 10 to 20 mm (0.39 to 0.79 in)] and make sure the clearance to the sash is parallel. If the clearance between the glass and sash is not parallel, loosen the regulator bolts, guide rail bolts, and the glass and guide rail bolts to correct the glass position.
- Make sure the system is normal with raising and lowering the glass.

REAR DOOR GLASS AND REGULATOR

Removal and Installation

INFOID:0000000001704163

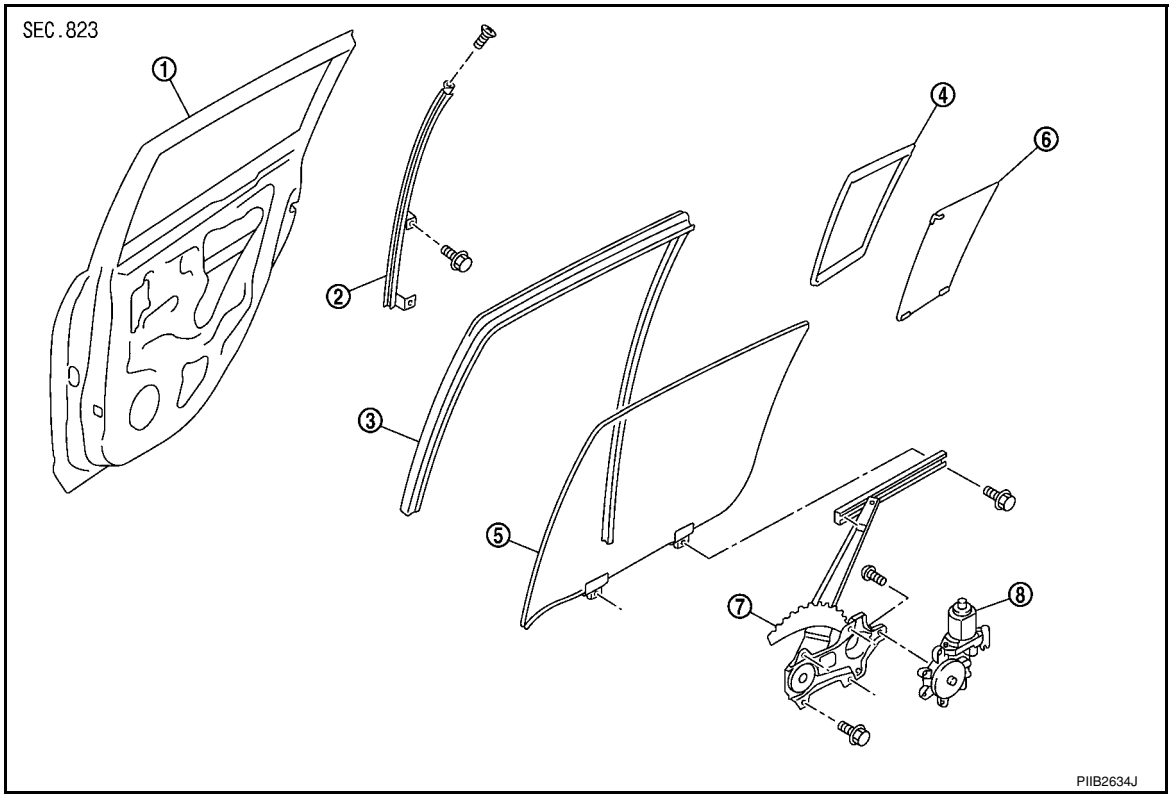

1. Door panel	2. Partition sash	3. Door glass run
4. Partition glass weatherstrip	5. Door glass	6. Partition glass
7. Regulator assembly	8. Power window motor (if equipped)	

DOOR GLASS

Removal

1. Remove position aside the rear door finisher. Refer to EI-32, "Removal and Installation".
2. Disconnect the harness connector of rear door speaker.
3. Position aside the sealing screen.
   NOTE:
   If the sealing screen is reused, cut the butyl-tape so that a part of the butyl-tape remains on the sealing screen.
4. Remove partition sash bolt and screw, pull the partition sash downward and tilt the upper end of the sash forward to pull out the sash upward.

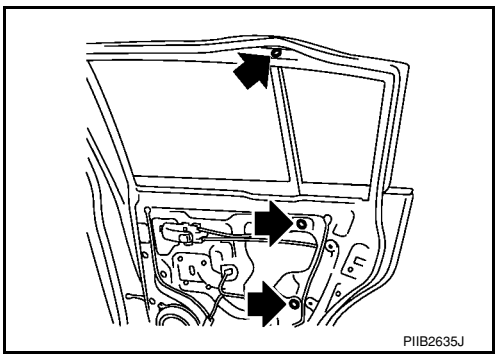

5. Pull out the partition glass in the direction as shown.

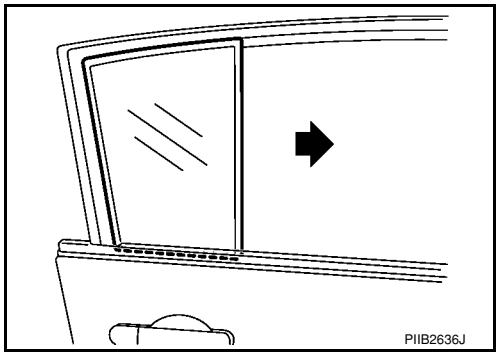

6. If equipped, operate the power window switch to raise/lower the door window until the glass bolts can be seen.
   NOTE:
   Connect the harness connector to the power window switch.
7. Remove the rear door glass bolts.
8. Pull out the rear door glass toward the outside of the door to remove.

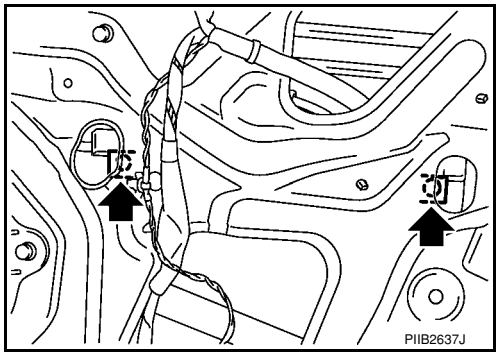

9. Remove the door glass run from the door panel.

Installation

Installation is in the reverse order of removal.

REGULATOR ASSEMBLY

Removal

1. Remove and position aside the rear door finisher. Refer to EI-32, "Removal and Installation".
2. Disconnect the harness connector of rear speaker.
3. Position aside the sealing screen.

NOTE:
If the sealing screen is reused, cut the butyl-tape so that a part of butyl-tape remains on the sealing screen.

4. If equipped, operate the power window switch to raise/lower the door window until the glass bolts can be seen.
   NOTE:
   Connect the harness connector to the power window switch.
5. Remove the rear door glass bolts.

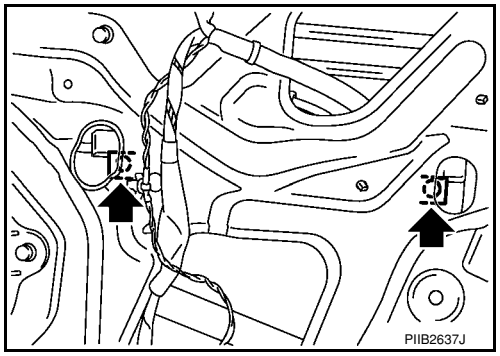

6. Raise up the door glass and hold with a suction lifter A.

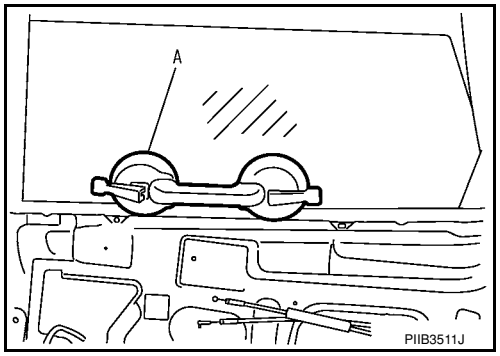

7. Remove the regulator bolts, and then remove the regulator assembly from the door panel.

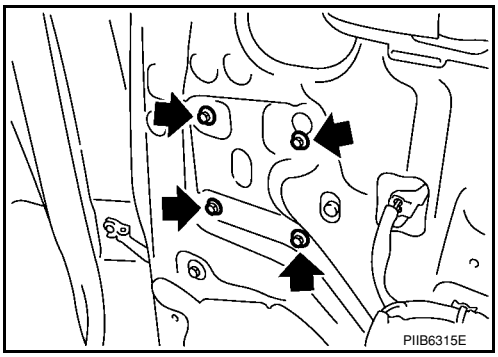

Installation
Installation is in the reverse order of removal.

Inspection after Removal
Check the regulator assembly for the following. [If a problem is detected, grease or replace it as shown].
- Gear wear
- Regulator deformation
- Grease condition for each sliding part

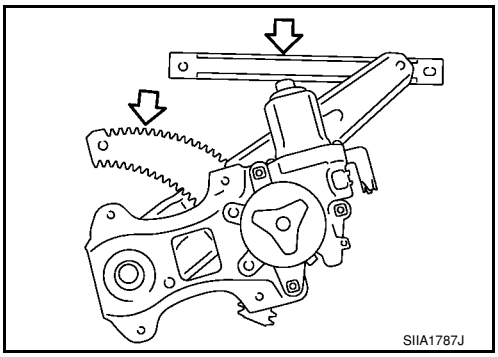

Disassembly and Assembly

INFOID:0000000001704164

POWER WINDOW REGULATOR ASSEMBLY

Disassembly
Remove the power window motor from the regulator assembly.

Assembly
Assembly is in the reverse order of disassembly.

Inspection after Installation

INFOID:0000000001704165

FITTING INSPECTION
- Make sure the glass is securely fit into the glass run groove.
- Lower the glass slightly [approx. 10 to 20 mm (0.39 to 0.79 in)], and make sure the clearance to the sash is parallel. If the clearance between the glass and sash is not parallel, loosen the regulator bolts, guide rail bolts, and glass and carrier plate bolts to correct the glass position.

REAR WINDOW DEFOGGER

Component Parts and Harness Connector Location

INFOID:0000000001704166

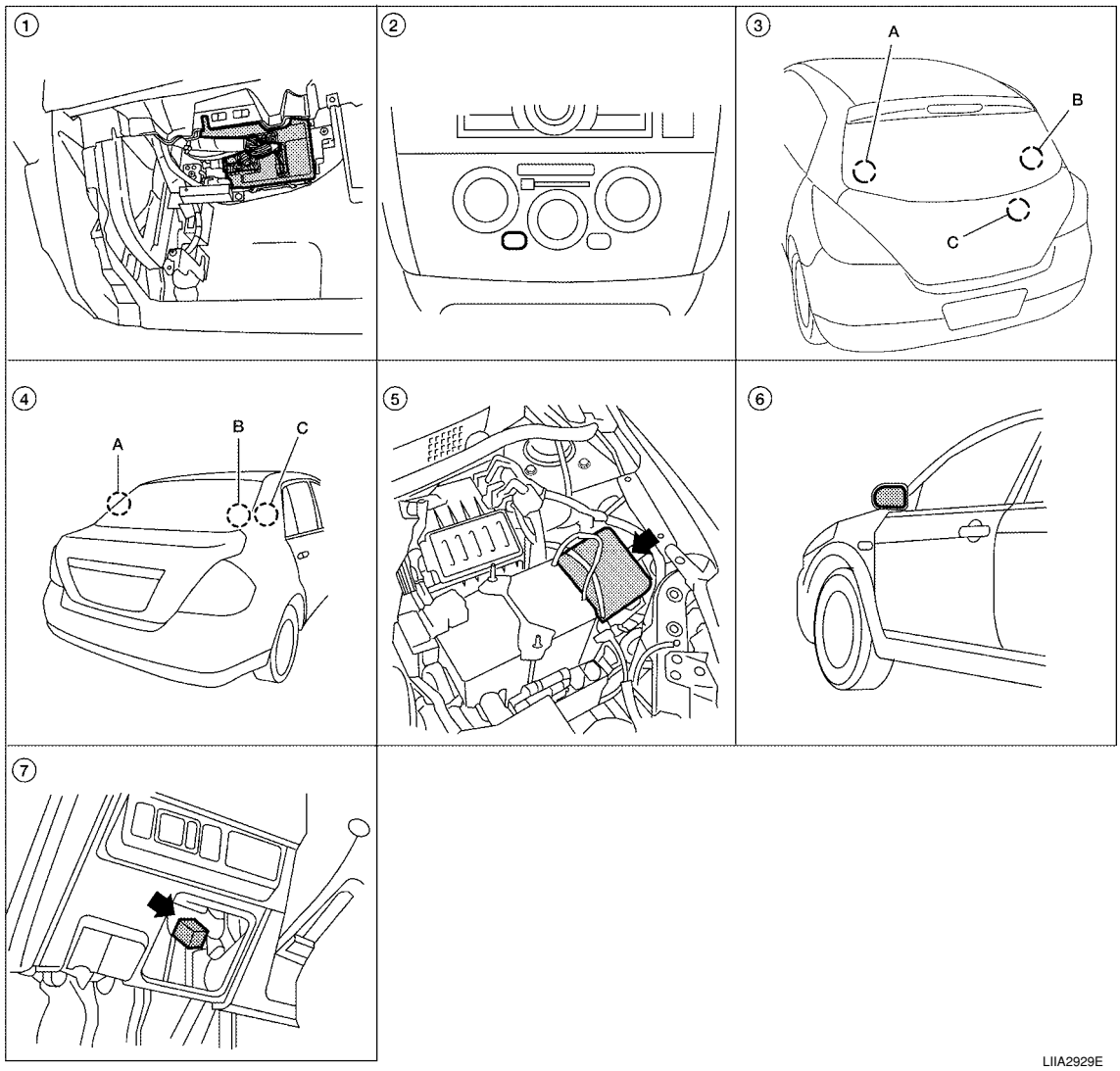

LIIA2929E

1. BCM M18, M20 (view with glove box removed)
2. Front air control M33
3. A. Rear window defogger ground connector D413 (Hatchback)
   B. Rear window defogger connector D412 (Hatchback)
   C. Condenser-1 D409, D411 (Hatchback)
4. A. Rear window defogger connector B140 (Sedan)
   B. Rear window defogger ground connector B141 (Sedan)
   C. Condenser-1 B130, B131 (Sedan)
5. IPDM E/R E46, E48
6. Door mirror LH D4, RH D107 (with heated mirrors)
7. Heated mirror relay M48 (with heated mirrors)

System Description

INFOID:0000000001704167

The rear window defogger system is controlled by BCM (body control module) and IPDM E/R (intelligent power distribution module engine room).
The rear window defogger only operates for approximately 15 minutes.

Power is supplied at all times
- through 15A fuses (No. 46 and 47, located in the IPDM E/R)
- to rear window defogger relay
- through 10A fuse [No. 5 (with heated mirrors), located in the fuse block (J/B)]
- to heated mirror relay terminal 3
- through 40A fusible link (letter **g** , located in the fuse and fusible link box)
- to BCM terminal 70.

With the ignition switch turned to ON or START position, power is supplied
- through ignition relay
- to rear window defogger relay (located in the IPDM E/R)
- through 10A fuse [No. 6, located in the fuse block (J/B)]
- to BCM terminal 38.

Ground is supplied
- to BCM terminal 67 and
- to front air control terminal 8
- through body grounds M57 and M61
- to IPDM E/R terminals 39 and 59
- through body grounds E15 and E24.

When front air control (rear window defogger switch) is turned to ON, ground is supplied
- to BCM terminal 9
- through front air control terminal 3
- through front air control terminal 8
- through body grounds M57 and M61.

Then rear window defogger switch is illuminated.
Then BCM recognizes that rear window defogger switch is turned to ON.
Then it sends rear window defogger switch signals to IPDM E/R via CAN communication (CAN-H, CAN-L).
When IPDM E/R receives rear window defogger switch signals, ground is supplied
- to rear window defogger relay (located in the IPDM E/R)
- through IPDM E/R terminals 39 and 59
- through body grounds E15 and E24

Then rear window defogger relay is energized.
With power and ground supplied, rear window defogger filaments heat and defog the rear window.
When rear window defogger relay is turned to ON (with heated mirrors), power is supplied
- through heated mirror relay terminal 5
- to door mirror (LH and RH) terminal 1.

Door mirror (LH and RH) is grounded through body grounds M57 and M61.
With power and ground supplied, rear window defogger filaments heat and defog the rear window and door mirror filaments heat and defog the mirrors.

CAN Communication System Description

INFOID:0000000001704168

Refer to LAN-6, "System Description".

Wiring Diagram - DEF -

INFOID:0000000001704169

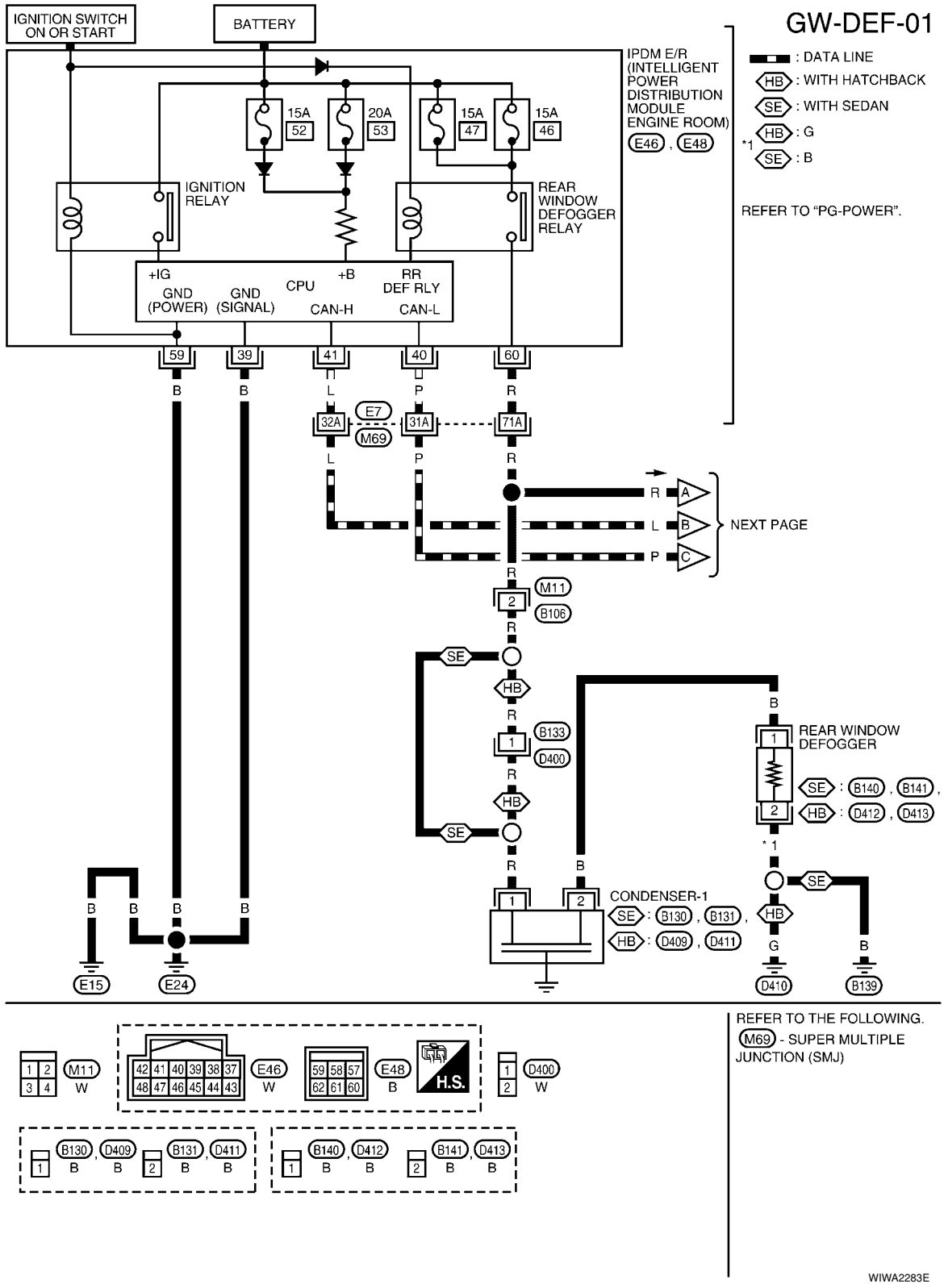

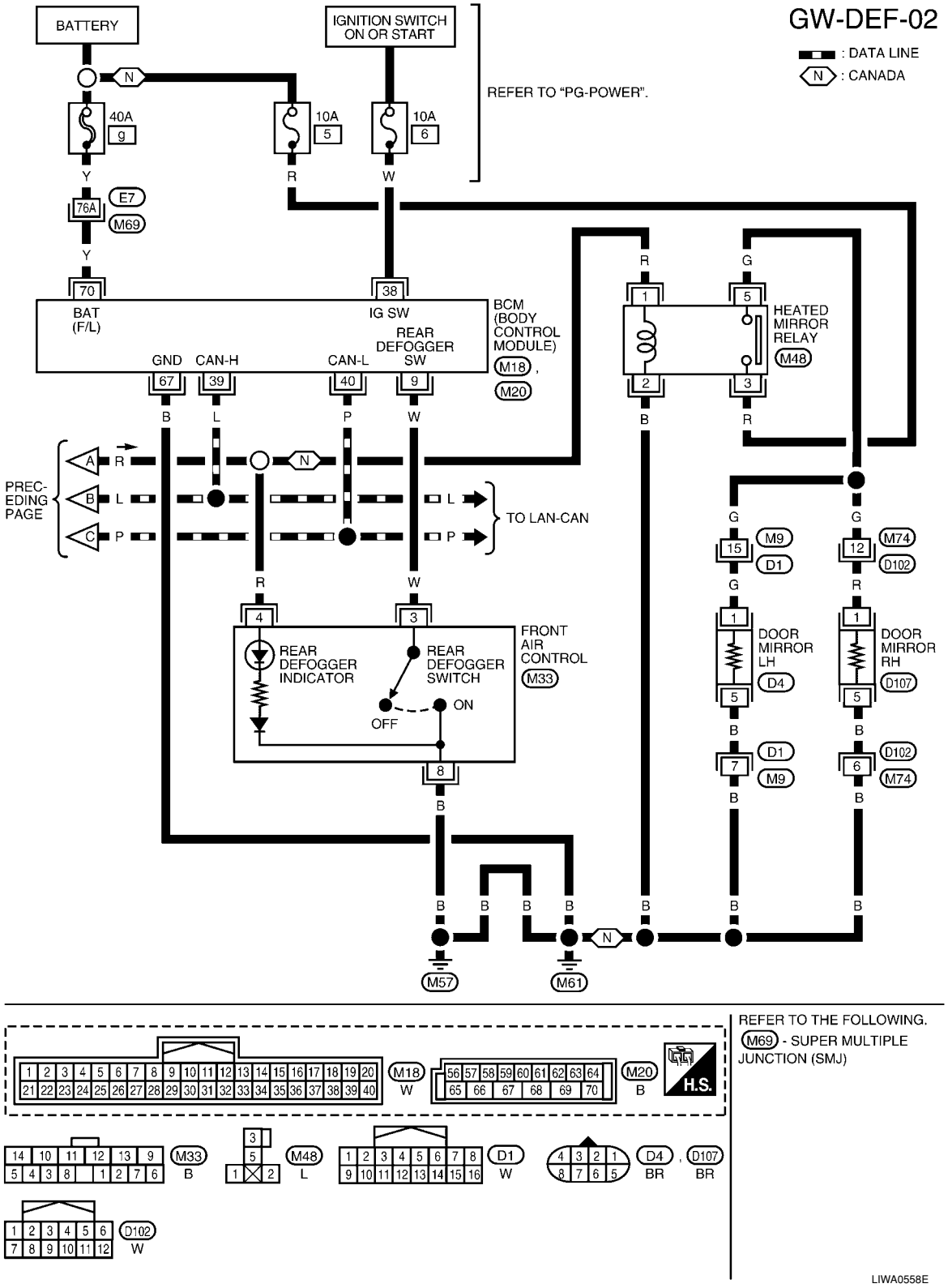

Terminal and Reference Value for BCM

INFOID:0000000001704170

Refer to BCS-11, "Terminal and Reference Value for BCM" .

Terminal and Reference Value for IPDM E/R

INFOID:0000000001704171

Refer to PG-23, "Terminal and Reference Value for IPDM E/R" .

Work Flow

INFOID:0000000001704172

1. Check the symptom and customer's requests.
2. Understand the outline of system. Refer to GW-49, "System Description" .
3. According to the trouble diagnosis chart, repair or replace the cause of the malfunction. Refer to GW-53, "Trouble Diagnosis Symptom Chart" .
4. Does rear window defogger operate normally? YES: GO TO 5, NO: GO TO 3.
5. Inspection End.

CONSULT-III Function (BCM)

INFOID:0000000001704173

CONSULT-III can display each diagnostic item using the diagnostic test modes shown following.

BCM diagnostic test item	Diagnostic mode	Content
Inspection by part	WORK SUPPORT	Supports inspections and adjustments. Commands are transmitted to the BCM for setting the status suitable for required operation, input/output signals are received from the BCM and received data is displayed.
	DATA MONITOR	Displays BCM input/output data in real time.
	ACTIVE TEST	Operation of electrical loads can be checked by sending drive signal to them.
	SELF-DIAG RESULTS	Displays BCM self-diagnosis results.
	CAN DIAG SUPPORT MNTR	The results of transmit/receive diagnosis of CAN communication can be read.
	ECU PART NUMBER	BCM part number can be read.
	CONFIGURATION	Performs BCM configuration read/write functions.

DATA MONITOR

Display Item List

Monitor item “Operation”		Content
REAR DEF SW	“ON/OFF”	Indicates (ON/OFF) condition of the rear window defogger switch.
IGN ON SW	“ON/OFF”	Indicates (ON/OFF) condition of the ignition switch signal.

ACTIVE TEST

Display Item List

Test item	Content
REAR WINDOW DEFOGGER	Gives a drive signal to the rear window defogger to activate it.

Trouble Diagnosis Symptom Chart

INFOID:0000000001704174

Make sure other systems using the signal of the following systems operate normally.

Symptom	Diagnoses / Service procedure	Refer to page
Rear window defogger and door mirror defoggers do not operate. (With heated mirrors)	1. BCM power supply and ground circuit check	BCS-15
	2. IPDM E/R auto active test check	PG-19
	3. Rear window defogger switch circuit check	GW-54
	4. Replace IPDM E/R	PG-26

Symptom	Diagnoses / Service procedure	Refer to page
Rear window defogger does not operate. (Without heated mirrors)	1. BCM power supply and ground circuit check	BCS-15
	2. IPDM E/R auto active test check	PG-19
	3. Rear window defogger switch circuit check	GW-54
	4. Rear window defogger circuit check	GW-55
	5. Filament check	GW-59
	7. Replace IPDM E/R	PG-26
Rear window defogger does not operate but both door mirror defoggers operate. (With heated mirrors)	1. Rear window defogger circuit check	GW-55
	2. Filament check	GW-59
Door mirror defoggers do not operate but rear window defogger operates. (With heated mirrors)	1. Door mirror defogger circuit check	GW-58
Rear window defogger switch does not light, but rear window defogger operates.	1. Replace front air control	MTC-55

BCM Power Supply and Ground Circuit Inspection

INFOID:0000000001704175

Refer to BCS-15, "BCM Power Supply and Ground Circuit Inspection" .

Rear Window Defogger Switch Circuit Inspection

INFOID:0000000001704176

1.CHECK REAR WINDOW DEFOGGER SWITCH OPERATION

With CONSULT-III

Check (“REAR DEF SW”, “IGN ON SW”) in DATA MONITOR mode with CONSULT-III.

When rear window defogger switch is turned to ON
REAR DEF SW : ON
When ignition switch is turned to ON
IGN ON SW : ON

Without CONSULT-III

1. Turn ignition switch ON.
2. Check voltage between BCM connector and ground.

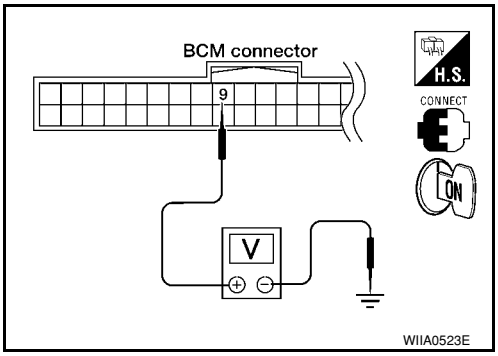

Connector	Terminals (+)	Terminals (-)	Condition	Voltage (V) (Approx.)
M18	9	Ground	Rear window defogger switch is pressed	0
			Rear window defogger switch is released	5

OK or NG

OK >> Rear window defogger switch check is OK.
NG >> GO TO 2.

2.CHECK REAR WINDOW DEFOGGER SWITCH CIRCUIT HARNESS CONTINUITY

1. Turn ignition switch OFF.
2. Disconnect BCM and front air control.
3. Check continuity between BCM connector M18 (A) terminal 9 and front air control connector M33 (B) terminal 3.

9 - 3 : Continuity should exist.

4. Check continuity between BCM connector M18 (A) terminal 9 and ground

9 - Ground : Continuity should not exist.

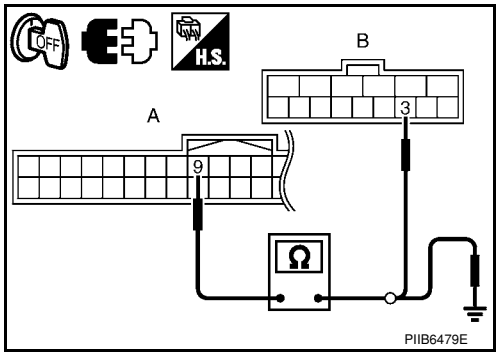

OK or NG

OK >> GO TO 3.
NG >> Repair or replace harness.

3. CHECK REAR WINDOW DEFOGGER SWITCH

Check continuity between front air control terminals.

Terminals		Condition	Continuity
3	8	Rear window defogger switch is ON (pressed)	Yes
		Rear window defogger switch is OFF (released)	No

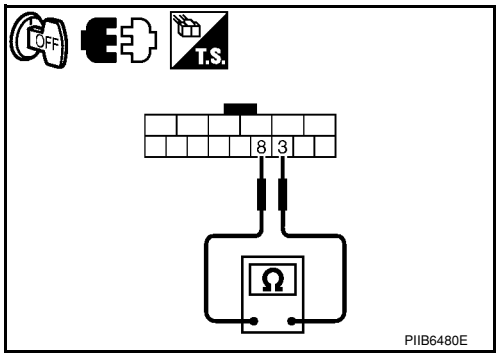

OK or NG

OK >> GO TO 4.
NG >> Replace front air control. Refer to MTC-55, "Removal and Installation" .

4. CHECK REAR WINDOW DEFOGGER SWITCH GROUND

Check continuity between front air control connector M33 terminal 8 and ground.

Connector	Terminal	Ground	Continuity
M33	8		Yes

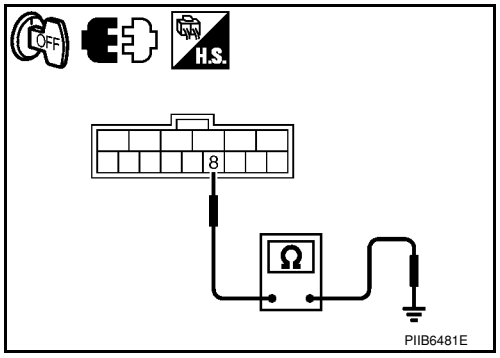

OK or NG

OK >> GO TO 5.
NG >> Repair or replace harness.

5. CHECK BCM OUTPUT SIGNAL

1. Connect BCM.
2. Turn ignition switch ON.
3. Check voltage between BCM connector M18 terminal 9 and ground.

9 - Ground : Approx. 5V

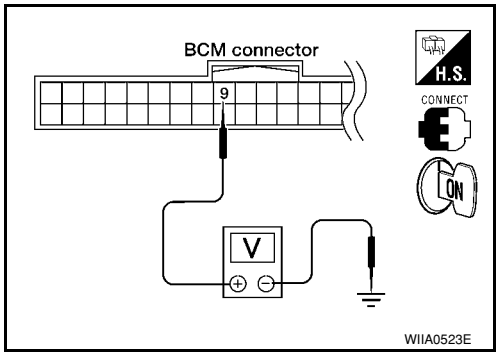

OK or NG

OK >> Replace front air control. Refer to MTC-55 .
NG >> Replace BCM. Refer to BCS-18, "Removal and Installation of BCM" .

Rear Window Defogger Circuit Inspection

INFOID:0000000001704177

1. CHECK FUSES

Check if any of the following fuses in IPDM E/R are blown.

Component Parts	Ampere	Fuse No.
IPDM E/R	15A	46
IPDM E/R	15A	47

OK or NG

OK >> GO TO 2.
NG >> If fuse is blown, be sure to eliminate cause of malfunction before installing new fuse.

2. CHECK REAR WINDOW DEFOGGER POWER SUPPLY CIRCUIT

1. Turn ignition switch OFF.
2. Disconnect rear window defogger.
3. Turn ignition switch ON.
4. Check voltage between rear window defogger connector and ground.

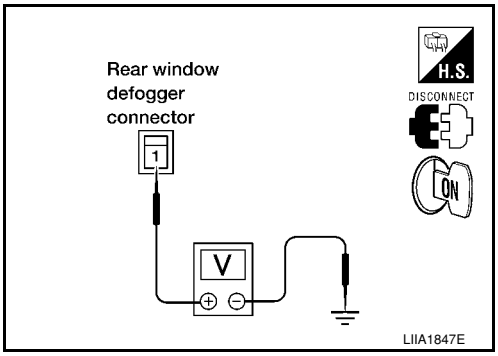

Connector	Terminals		Condition	Voltage (V) (Approx.)
	(+)	(-)		
D412 (Hatch-back) B140 (Se-dan)	1	Ground	Rear window defogger switch ON	Battery voltage
			Rear window defogger switch OFF	0

OK or NG

OK >> GO TO 3.
NG >> GO TO 4.

3. CHECK REAR WINDOW DEFOGGER GROUND CIRCUIT

1. Turn ignition switch OFF.
2. Check continuity between rear window defogger connector D413 (Hatchback) or B141 (Sedan) terminal 2 and ground.

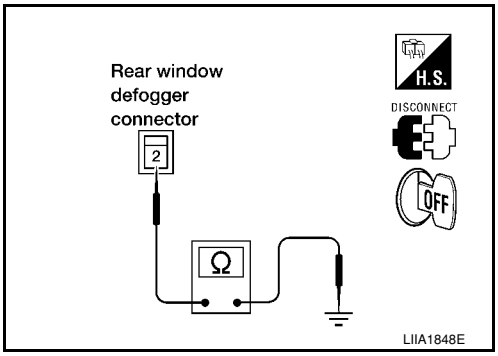

2 - Ground : Continuity should exist.

OK or NG

OK >> Check filament. Refer to GW-59, "Filament Check" .
- If filament is OK.
  Check the condition of the harness and the connector.
- If filament is NG.
  Repair filament. Refer to GW-60, "Filament Repair" .

NG >> Repair or replace harness.

4. CHECK CONDENSER-1 CIRCUIT

1. Disconnect condenser-1.
2. Check continuity between rear window defogger connector and condenser-1 connector.

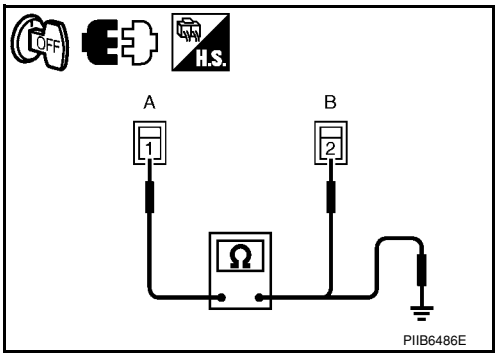

A		B		Continuity
Connector	Terminal	Connector	Terminal	
D412 (Hatchback) B140 (Sedan)	1	D411 (Hatch-back) B141 (Sedan)	2	Yes

3. Check continuity between rear window defogger connector and ground.

A		Ground	Continuity
Connector	Terminal		
D412 (Hatchback) B140 (Sedan)	1		No

OK or NG

OK >> GO TO 5.
NG >> Repair or replace harness.

5. CHECK CONDENSER-1

Check continuity between condenser-1 terminals.

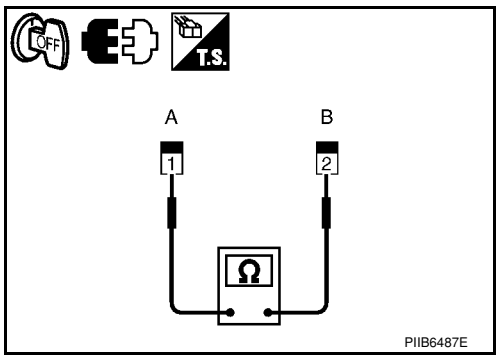

A	B	Continuity
Terminal	Terminal	
1	2	Yes

OK or NG

OK >> GO TO 6.
NG >> Replace condenser-1.

6. CHECK CONDENSER-1 HARNESS CONTINUITY

1. Disconnect IPDM E/R.
2. Check continuity between condenser-1 connector and IPDM E/R connector.

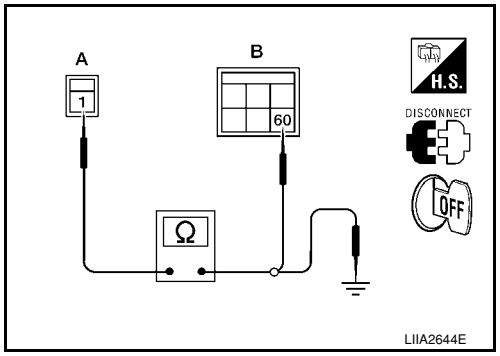

A		B		Continuity
Connector	Terminal	Connector	Terminal	
D409 (Hatchback) B130 (Sedan)	1	E48	60	Yes

3. Check continuity between condenser-1 connector and ground.

A		Ground	Continuity
Condenser-1 connector	Terminal		
D409 (Hatchback) B130 (Sedan)	1		No

OK or NG

OK >> GO TO 7.
NG >> Repair or replace harness.

7. CHECK REAR WINDOW DEFOGGER RELAY OUTPUT SIGNAL

1. Connect IPDM E/R.
2. Turn ignition switch ON.
3. Check voltage between IPDM E/R connector and ground.

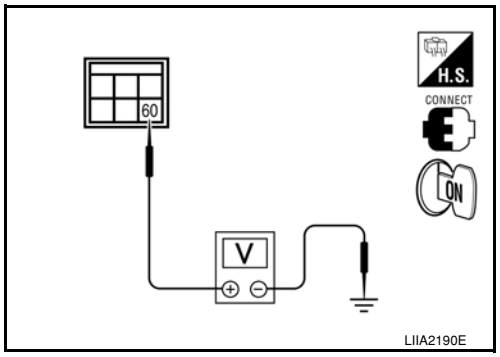

Connector	Terminals		Condition	Voltage (V) (Approx.)
	(+)	(-)		
E48	60	Ground	Rear window defogger switch ON	Battery voltage
			Rear window defogger switch OFF	0

OK or NG

OK >> Check condition of harness and connector.
NG >> Replace IPDM E/R. Refer to PG-26, "Removal and Installation of IPDM E/R" .

Door Mirror Defogger Circuit Inspection

INFOID:0000000001704178

1.CHECK FUSE

Check if the following fuse in the fuse block (J/B) is blown.

Component Parts	Ampere	Fuse No.
Fuse block (J/B)	10A	5

OK or NG

OK >> GO TO 2.
NG >> If fuse is blown, be sure to eliminate cause of malfunction before installing new fuse.

2.CHECK HEATED MIRROR RELAY POWER SUPPLY CIRCUIT

1. Disconnect heated mirror relay.
2. Turn ignition switch ON.
3. Check voltage between heated mirror relay connector and ground.

Connector	Terminals		Voltage (V) (Approx.)
	(+)	(-)	
M48	1	Ground	Battery voltage
	3		

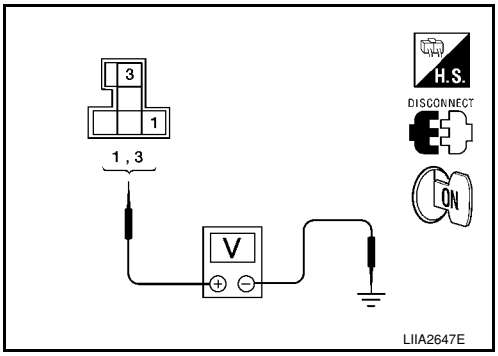

OK or NG

OK >> GO TO 3.
NG >> Repair or replace harness.

3.CHECK HEATED MIRROR RELAY GROUND CIRCUIT

1. Turn ignition switch OFF.
2. Check continuity between heated mirror relay connector M48 terminal 2 and ground.

2 - Ground : Continuity should exist.

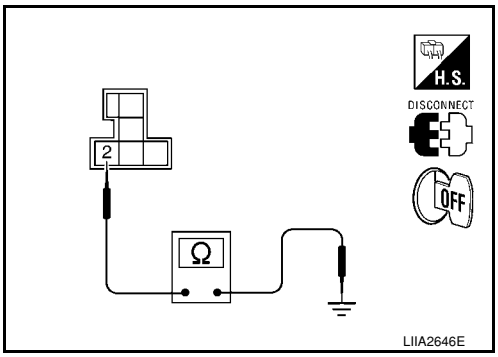

OK or NG

OK >> GO TO 4.
NG >> Repair or replace harness.

4.INSPECTION OF HEATED MIRROR RELAY

Check continuity between heated mirror relay terminals 3 and 5.

Condition	Continuity
12V direct current supply between terminals 1 and 2	Yes
No current supply	No

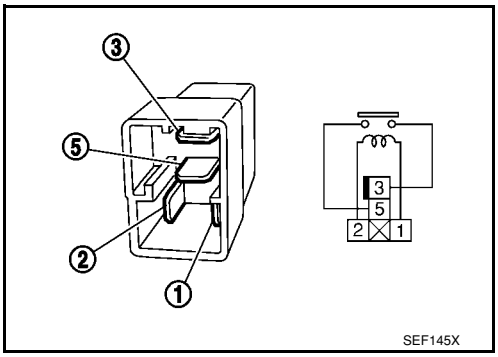

OK or NG

OK >> GO TO 5.
NG >> Replace heated mirror relay.

5.CHECK HARNESS CONTINUITY

1. Disconnect door mirror (LH or RH).
2. Check continuity between door mirror (LH or RH) connector and heated mirror relay connector.

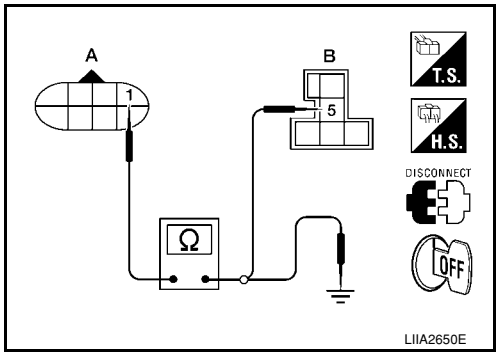

Connector	Terminal	Connector	Terminal	Continuity
A		B		
D4 (LH)	1	M48	5	Yes
D107 (RH)				

3. Check continuity between door mirror (LH or RH) connector and ground.

A		Ground	Continuity
Connector	Terminal		
D4 (LH)	1	Ground	No
D107 (RH)			

OK or NG

OK >> GO TO 6.
NG >> Repair or replace harness.

6. CHECK GROUND CIRCUIT

Check continuity between door mirror (LH or RH) connector and ground.

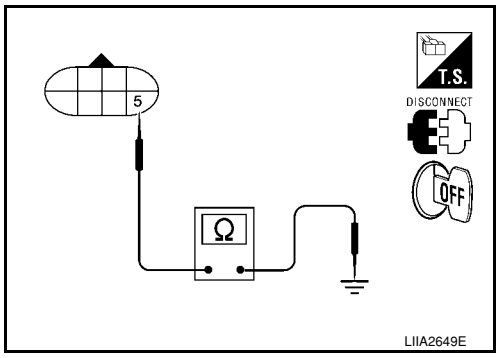

Connector	Terminals		Continuity
D4 (LH)	5	Ground	Battery voltage
D107 (RH)			

OK or NG

OK >> Replace door mirror (LH or RH). Refer to GW-63, "Removal and Installation" .
NG >> Repair or replace harness.

Filament Check

INFOID:0000000001704179

1. When measuring voltage, wrap tin foil around the top of the negative probe. Then press the foil against the wire with your finger.

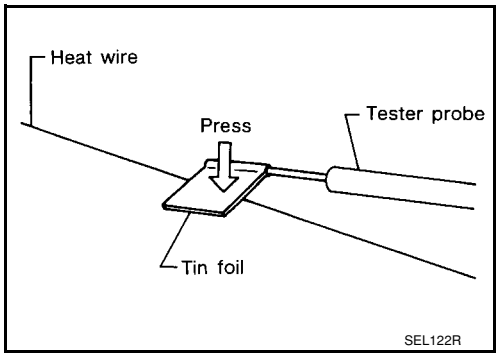

2. Attach probe circuit tester (in Volt range) to middle portion of each filament.

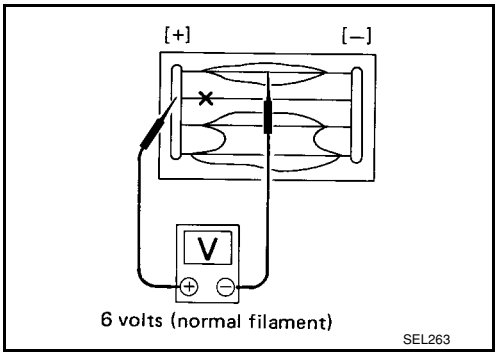

3. If a filament is burned out, circuit tester registers 0 or battery voltage.
4. To locate burned out point, move probe to left and right along filament. Test needle will swing abruptly when probe passes the point.

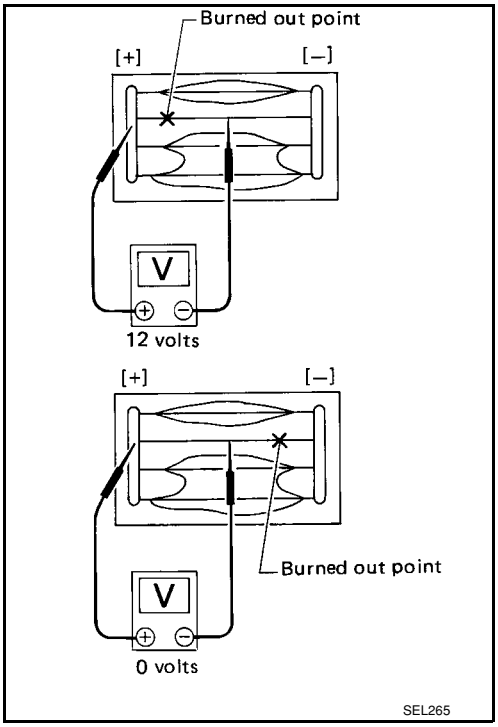

Filament Repair

INFOID:0000000001704180

REPAIR EQUIPMENT

- Conductive silver composition (DuPont No. 4817 or equivalent)
- Ruler 30 cm (11.8 in) long
- Drawing pen
- Heat gun
- Alcohol
- Cloth

REPAIRING PROCEDURE

1. Wipe broken heat wire and its surrounding area clean with a cloth dampened in alcohol.
2. Apply a small amount of conductive silver composition to tip of drawing pen.
   Shake silver composition container before use.
3. Place ruler on glass along broken line. Deposit conductive silver composition on break with drawing pen. Slightly overlap existing heat wire on both sides [preferably 5 mm (0.20 in)] of the break.

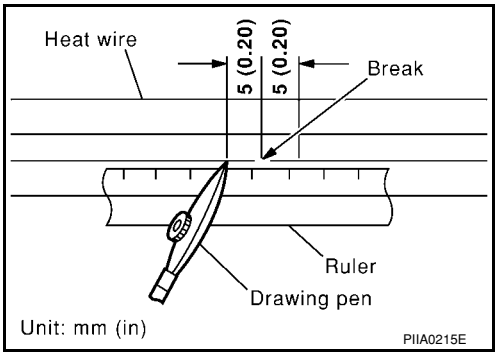

4. After repair has been completed, check repaired wire for continuity. This check should be conducted 10 minutes after silver composition is deposited.
   Do not touch repaired area while test is being conducted.

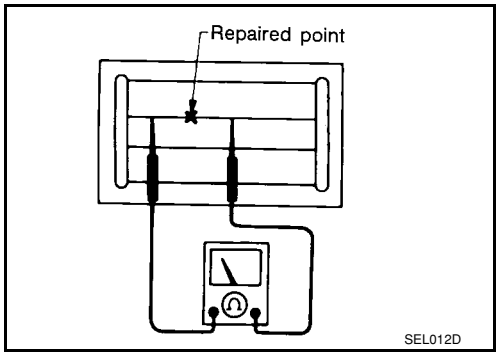

5. Apply a constant stream of hot air directly to the repaired area for approximately 20 minutes with a heat gun. A minimum distance of 3 cm (1.2 in) should be kept between repaired area and hot air outlet.
   If a heat gun is not available, let the repaired area dry for 24 hours.

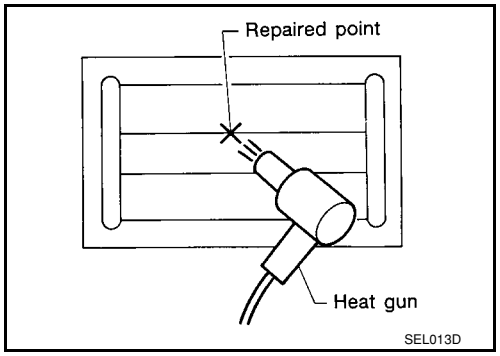

DOOR MIRROR

Wiring Diagram - MIRROR -

INFOID:0000000001704181

GW-MIRROR-01

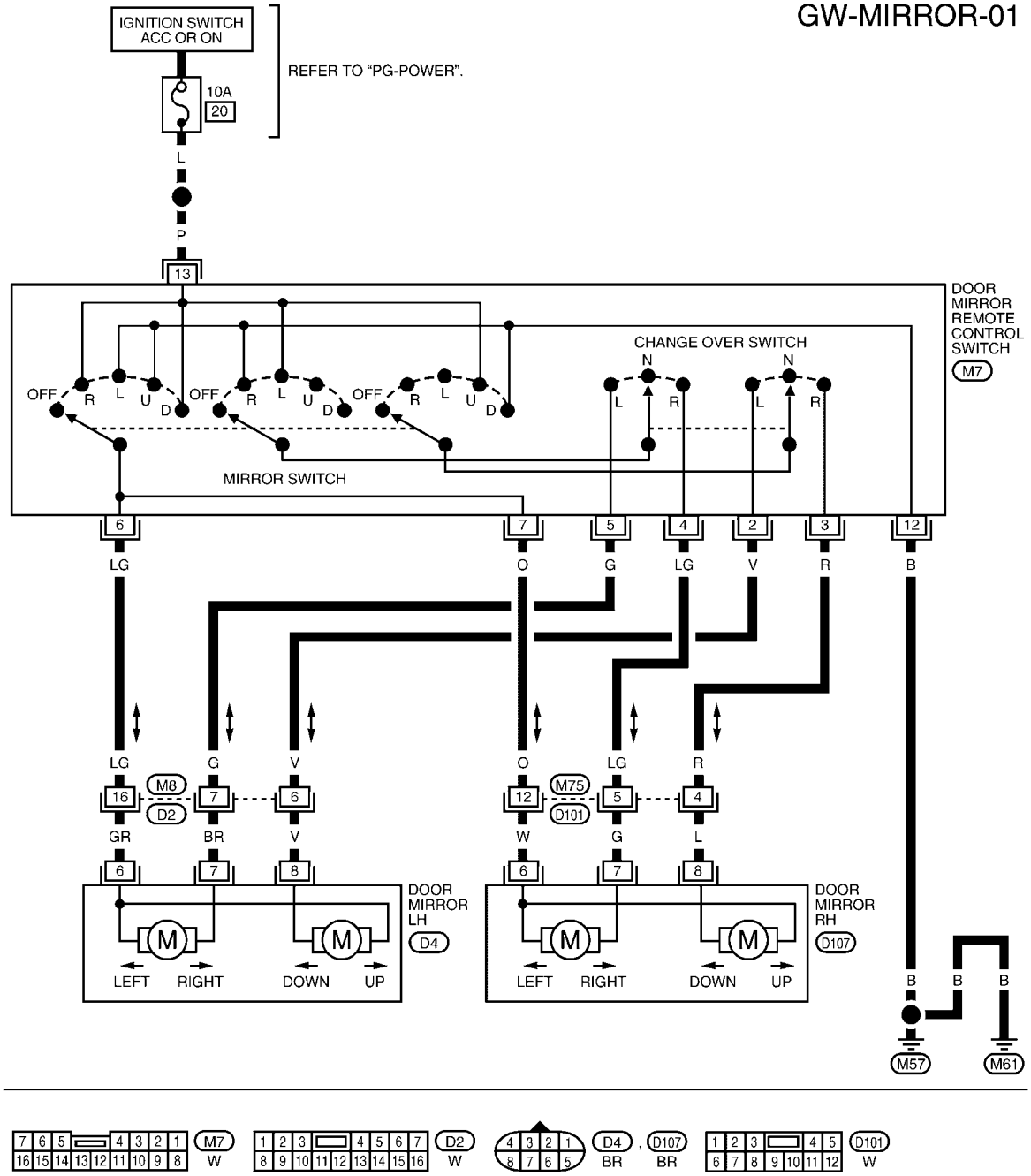

LIWA0559E

Removal and Installation

INFOID:0000000001704182

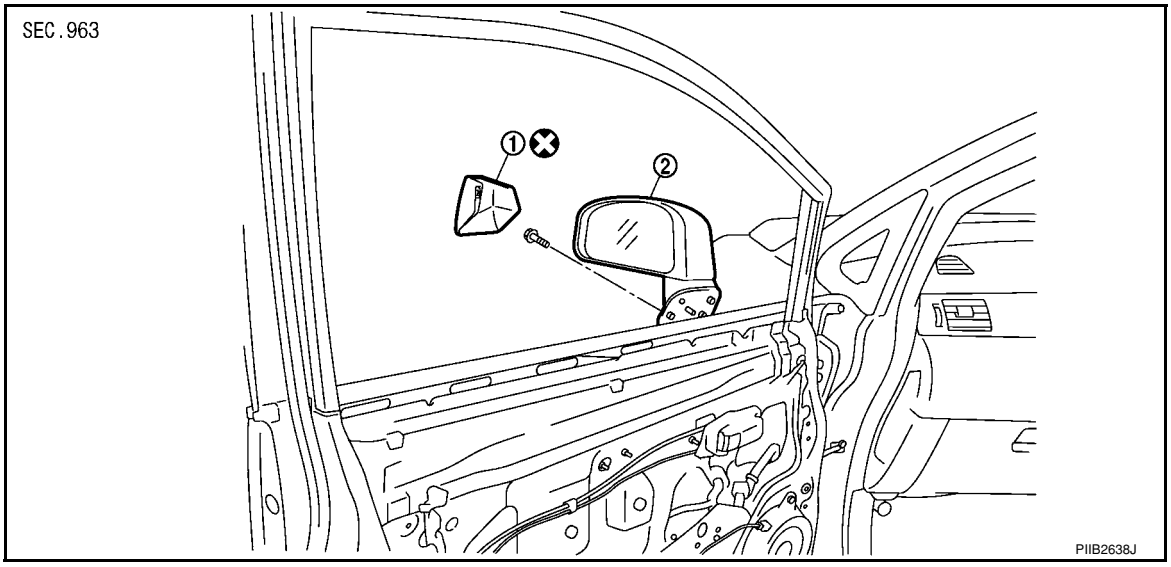

1. Door mirror base cover
2. Door mirror

CAUTION:
Be careful not to damage the mirror body.

REMOVAL

1. Remove the front door finisher. Refer to EI-32, "Removal and Installation".
2. Disconnect the harness connector of door mirror.
3. Using a suitable tool remove door mirror base cover.
   CAUTION:
   - **Do not reuse the disassembled door mirror base cover.**
   - **Be careful not to damage the door panel with a tool.**

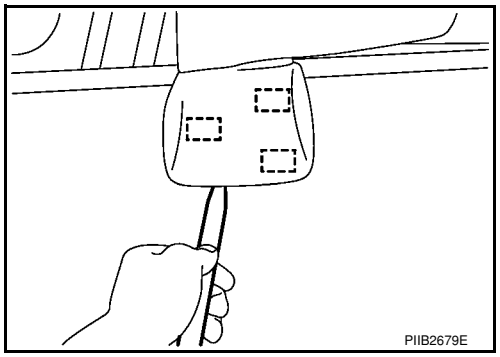

4. Remove the door mirror bolts, and remove the door mirror assembly.
   CAUTION:
   Do not use force to remove the door mirror assembly by force because it is attached by clip.

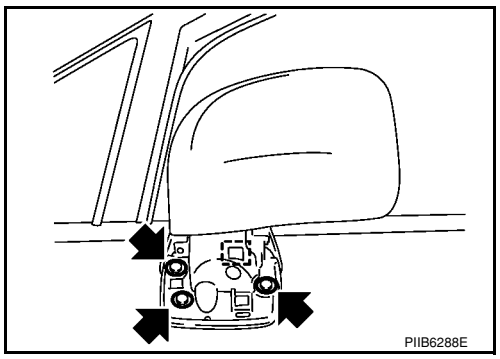

INSTALLATION

Installation is in the reverse order of removal.

Disassembly and Assembly

INFOID:0000000001704183

DISASSEMBLY

1. Pull out all the terminals from the connector.
   NOTE:

Before pulling out the terminal, note the connector terminal arrangement.

2. Turn the mirror glass surface upward.
3. Apply a protective tape A to the housing.
4. Insert a suitable tool B into the concave gap between mirror holder (1) and power unit (2). Push up tabs (3) (2 locations) on mirror holder to disengage lower part of mirror holder, and remove mirror body assembly.
   NOTE:
   When pushing up the tabs, do not forcefully push up only 1 concave position but try to push up 2 concave positions.

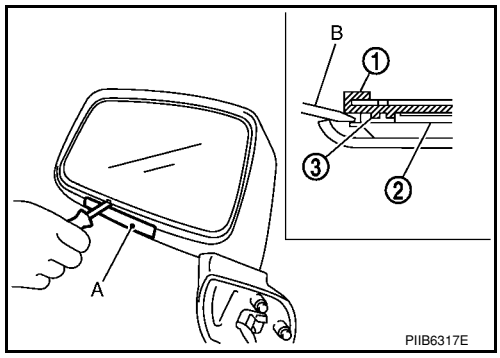

5. Remove the mirror body (1) from the mirror housing assembly (2).

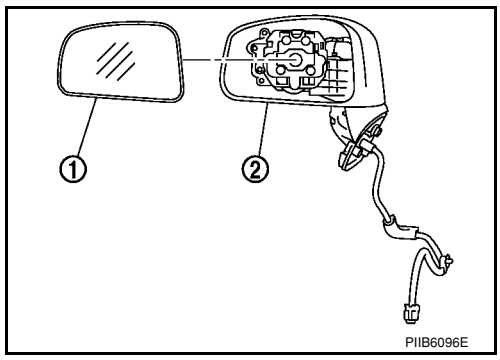

ASSEMBLY

1. Warm the lower tabs with a dryer or equivalent.
   NOTE:
   Warm the lower tabs sufficiently before installing the mirror body. The tabs may be broken if it is cold. Be especially careful in the winter.
2. Engage upper tabs of mirror body (1) with power unit (2). Then, press lower part of mirror glass down until the lower part snaps to allow engagement of lower tabs.
   NOTE:
   After installation, visually check that the lower tabs are securely engaged when viewed from the bottom of mirror surface.
3. Insert the harness terminals into the connector.
   NOTE:
   Make sure to insert the harness terminals into the correct connector. Do not confuse the locations.

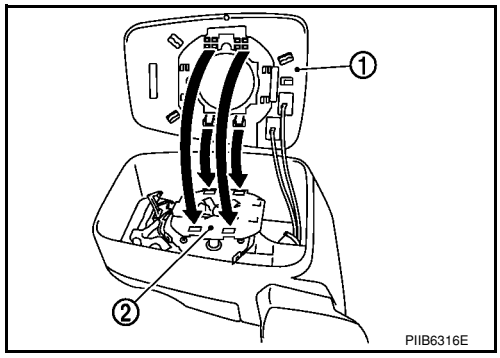

INSIDE MIRROR

Removal and Installation

INFOID:0000000001704184

REMOVAL

Slide the inside mirror upward, and then remove inside mirror (1) from the mirror base (2).

CAUTION:

- **Do not use excessive force to remove the inside mirror because it is inserted tightly into the mirror base.**
- **Do not reuse the inside mirror disassembled from mirror base.**

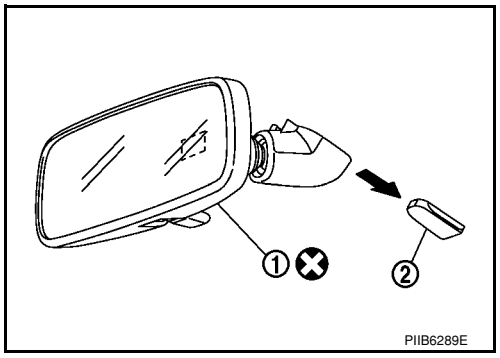

INSTALLATION

Installation is in the reverse order of removal.

CAUTION:

Be sure to insert the inside mirror to the mirror base until the pawl is engaged to the mirror base.

SECTION IP
INSTRUMENT PANEL

CONTENTS

PRECAUTION 2

PRECAUTIONS 2
Precaution for Supplemental Restraint System (SRS) "AIR BAG" and "SEAT BELT PRE-TENSIONER" 2
Precaution 2

PREPARATION 3

PREPARATION 3
Special Service Tool 3
Commercial Service Tool 3

SYMPTOM DIAGNOSIS 4

SQUEAK AND RATTLE TROUBLE DIAGNOSES 4
Work Flow 4
Generic Squeak and Rattle Troubleshooting 6
Diagnostic Worksheet 8

ON-VEHICLE REPAIR 10

INSTRUMENT PANEL ASSEMBLY 10
Component Parts 10
Removal and Installation 11
Disassembly and Assembly 23

PRECAUTION

PRECAUTIONS

Precaution for Supplemental Restraint System (SRS) "AIR BAG" and "SEAT BELT PRE-TENSIONER"

INFOID:0000000001704244

The Supplemental Restraint System such as “AIR BAG” and “SEAT BELT PRE-TENSIONER”, used along with a front seat belt, helps to reduce the risk or severity of injury to the driver and front passenger for certain types of collision. This system includes seat belt switch inputs and dual stage front air bag modules. The SRS system uses the seat belt switches to determine the front air bag deployment, and may only deploy one front air bag, depending on the severity of a collision and whether the front occupants are belted or unbelted.
Information necessary to service the system safely is included in the SR and SB section of this Service Manual.

WARNING:

- **To avoid rendering the SRS inoperative, which could increase the risk of personal injury or death in the event of a collision which would result in air bag inflation, all maintenance must be performed by an authorized NISSAN/INFINITI dealer.**
- **Improper maintenance, including incorrect removal and installation of the SRS, can lead to personal injury caused by unintentional activation of the system. For removal of Spiral Cable and Air Bag Module, see the SR section.**
- **Do not use electrical test equipment on any circuit related to the SRS unless instructed to in this Service Manual. SRS wiring harnesses can be identified by yellow and/or orange harnesses or harness connectors.**

Precaution

INFOID:0000000001704245

- Disconnect both battery terminals in advance.
- Disconnect air bag system line in advance.
- Never tamper with or force air bag lid open, as this may adversely affect air bag performance.
- Be careful not to scratch pad and other parts.
- When removing or disassembling any part, be careful not to damage or deform it. Protect parts which may get in the way with cloth.
- When removing parts, protect parts by wrapping tools with vinyl or tape.
- Keep removed parts protected with cloth.
- If a clip is deformed or damaged, replace it.
- If an non-reusable part is removed, replace it with a new one.
- Tighten bolts and nuts firmly to the specified torque.
- After re-assembly has been completed, make sure each part functions correctly.
- Remove stains in the following way.

Water-soluble stains:
Dip a soft cloth in warm water, and then squeeze it tightly. After wiping the stain, wipe with a soft dry cloth.
Oil stain:
Dissolve a synthetic detergent in warm water (density of 2 to 3% or less), dip the cloth, then clean off the stain with the cloth. Next, dip the cloth in fresh water and squeeze it tightly. Then clean off the detergent completely. Then wipe the area with a soft dry cloth.

- Do not use any organic solvent, such as thinner or benzine.

PREPARATION

PREPARATION

Special Service Tool

INFOID:0000000001704246

The actual shapes of Kent-Moore tools may differ from those of special service tools illustrated here.

Tool number (Kent-Moore No.) Tool name	Description
— (J-39570) Chassis ear 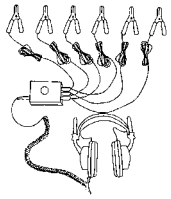 SIIA0993E	Locating the noise
— (J-43980) NISSAN Squeak and Rattle Kit 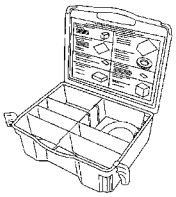 SIIA0994E	Repairing the cause of noise

Commercial Service Tool

INFOID:0000000001704247

Tool name	Description
Engine ear 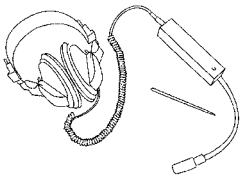 SIIA0995E	Locating the noise
Power tool 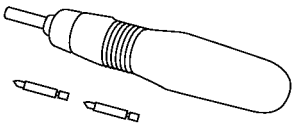 PBIC0191E	Loosening bolts and nuts

SYMPTOM DIAGNOSIS

SQUEAK AND RATTLE TROUBLE DIAGNOSES

Work Flow

INFOID:0000000001704248

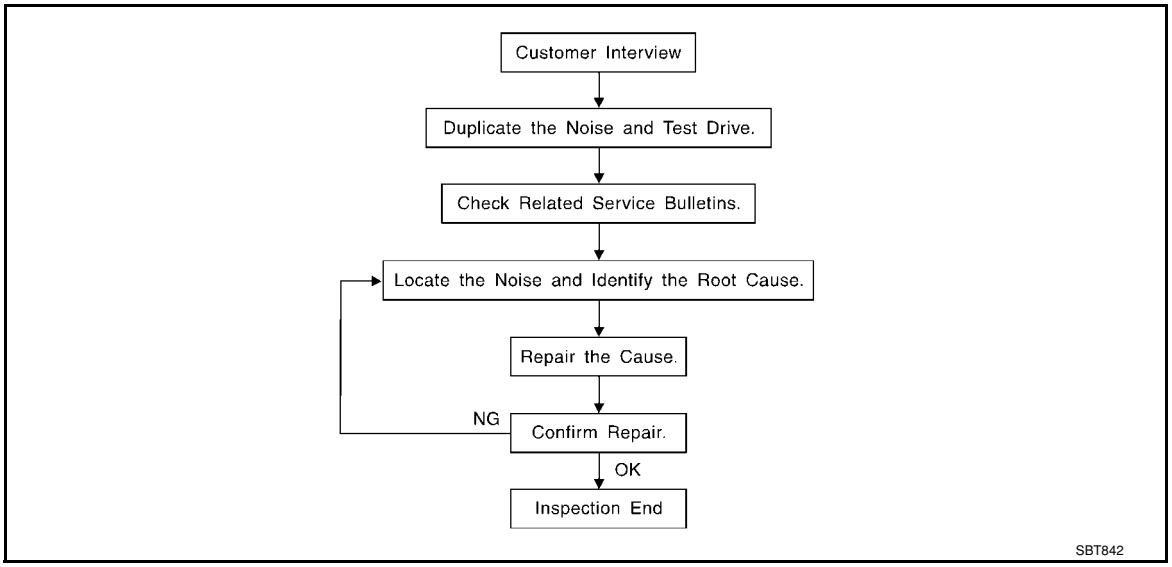

CUSTOMER INTERVIEW

Interview the customer, if possible, to determine the conditions that exist when the noise occurs. Use the Diagnostic Worksheet during the interview to document the facts and conditions when the noise occurs and any customer's comments; refer to IP-8, "Diagnostic Worksheet". This information is necessary to duplicate the conditions that exist when the noise occurs.

- The customer may not be able to provide a detailed description or the location of the noise. Attempt to obtain all the facts and conditions that exist when the noise occurs (or does not occur).
- If there is more than one noise in the vehicle, be sure to diagnose and repair the noise that the customer is concerned about. This can be accomplished by test driving the vehicle with the customer.
- After identifying the type of noise, isolate the noise in terms of its characteristics. The noise characteristics are provided so the customer, service adviser and technician are all speaking the same language when defining the noise.
  - Squeak — (Like tennis shoes on a clean floor)
    Squeak characteristics include the light contact/fast movement/brought on by road conditions/hard surfaces = higher pitch noise/softer surfaces = lower pitch noises/edge to surface = chirping.
  - Creak — (Like walking on an old wooden floor)
    Creak characteristics include firm contact/slow movement/twisting with a rotational movement/pitch dependent on materials/often brought on by activity.
  - Rattle — (Like shaking a baby rattle)
    Rattle characteristics include the fast repeated contact/vibration or similar movement/loose parts/missing clip or fastener/incorrect clearance.
  - Knock — (Like a knock on a door)
    Knock characteristics include hollow sounding/sometimes repeating/often brought on by driver action.
  - Tick — (Like a clock second hand)
    Tick characteristics include gentle contacting of light materials/loose components/can be caused by driver action or road conditions.
  - Thump — (Heavy, muffled knock noise)
    Thump characteristics include softer knock/dead sound often brought on by activity.
  - Buzz — (Like a bumblebee)
    Buzz characteristics include high frequency rattle/firm contact.
- Often the degree of acceptable noise level will vary depending upon the person. A noise that you may judge as acceptable may be very irritating to the customer.
- Weather conditions, especially humidity and temperature, may have a great effect on noise level.

DUPLICATE THE NOISE AND TEST DRIVE

If possible, drive the vehicle with the customer until the noise is duplicated. Note any additional information on the Diagnostic Worksheet regarding the conditions or location of the noise. This information can be used to duplicate the same conditions when you confirm the repair.
If the noise can be duplicated easily during the test drive, to help identify the source of the noise, try to duplicate the noise with the vehicle stopped by doing one or all of the following:

1. Close a door.
2. Tap or push/pull around the area where the noise appears to be coming from.
3. Rev the engine.
4. Use a floor jack to recreate vehicle “twist”.
5. At idle, apply engine load (electrical load, half-clutch on M/T model, drive position on A/T model).
6. Raise the vehicle on a hoist and hit a tire with a rubber hammer.

- Drive the vehicle and attempt to duplicate the conditions the customer states exist when the noise occurs.
- If it is difficult to duplicate the noise, drive the vehicle slowly on an undulating or rough road to stress the vehicle body.

CHECK RELATED SERVICE BULLETINS

After verifying the customer concern or symptom, check ASIST for Technical Service Bulletins (TSBs) related to that concern or symptom.
If a TSB relates to the symptom, follow the procedure to repair the noise.

LOCATE THE NOISE AND IDENTIFY THE ROOT CAUSE

1. Narrow down the noise to a general area. To help pinpoint the source of the noise, use a listening tool (Chassis Ear: J-39570, Engine Ear: J-39565, and mechanics stethoscope).
2. Narrow down the noise to a more specific area and identify the cause of the noise by:
   - Removing the components in the area that you suspect the noise is coming from.
     Do not use too much force when removing clips and fasteners, otherwise clips and fasteners can be broken or lost during the repair, resulting in the creation of new noise.
   - Tapping or pushing/pulling the component that you suspect is causing the noise.
     Do not tap or push/pull the component with excessive force, otherwise the noise will be eliminated only temporarily.
   - Feeling for a vibration with your hand by touching the component(s) that you suspect is (are) causing the noise.
   - Placing a piece of paper between components that you suspect are causing the noise.
   - Looking for loose components and contact marks.

   Refer to IP-6, "Generic Squeak and Rattle Troubleshooting" .

REPAIR THE CAUSE

- If the cause is a loose component, tighten the component securely.
- If the cause is insufficient clearance between components:
- Separate components by repositioning or loosening and retightening the component, if possible.
- Insulate components with a suitable insulator such as urethane pads, foam blocks, felt cloth tape or urethane tape. A NISSAN Squeak and Rattle Kit (J-43980) is available through your authorized NISSAN Parts Department.

CAUTION:
Do not use excessive force as many components are constructed of plastic and may be damaged.
Always check with the Parts Department for the latest parts information.

The following materials are contained in the NISSAN Squeak and Rattle Kit (J-43980). Each item can be ordered separately as needed.
URETHANE PADS [1.5 mm (0.059 in) thick]
Insulates connectors, harness, etc.
76268-9E005: 100 x 135 mm (3.94 x 5.31 in)/76884-71L01: 60 x 85 mm (2.36 x 3.35 in)/76884-71L02: 15 x 25 mm (0.59 x 0.98 in)
INSULATOR (Foam blocks)
Insulates components from contact. Can be used to fill space behind a panel.
73982-9E000: 45 mm (1.77 in) thick, 50 x 50 mm (1.97 x 1.97 in)/73982-50Y00: 10 mm (0.39 in) thick, 50 x 50 mm (1.97 x 1.97 in)
INSULATOR (Light foam block)
80845-71L00: 30 mm (1.18 in) thick, 30 x 50 mm (1.18 x 1.97 in)
FELT CLOTH TAPE
Used to insulate where movement does not occur. Ideal for instrument panel applications.
68370-4B000: 15 x 25 mm (0.59 x 0.98 in) pad/68239-13E00: 5 mm (0.20 in) wide tape roll

The following materials, not found in the kit, can also be used to repair squeaks and rattles.
UHMW (TEFLON) TAPE
Insulates where slight movement is present. Ideal for instrument panel applications.
SILICONE GREASE
Used in place of UHMW tape that will be visible or not fit.
Note: Will only last a few months.
SILICONE SPRAY
Use when grease cannot be applied.
DUCT TAPE
Use to eliminate movement.

CONFIRM THE REPAIR

Confirm that the cause of a noise is repaired by test driving the vehicle. Operate the vehicle under the same conditions as when the noise originally occurred. Refer to the notes on the Diagnostic Worksheet.

Generic Squeak and Rattle Troubleshooting

INFOID:0000000001704249

Refer to Table of Contents for specific component removal and installation information.

INSTRUMENT PANEL

Most incidents are caused by contact and movement between:

1. The cluster lid A and instrument panel
2. Acrylic lens and combination meter housing
3. Instrument panel to front pillar garnish
4. Instrument panel to windshield
5. Instrument panel mounting pins
6. Wiring harnesses behind the combination meter
7. A/C defroster duct and duct joint

These incidents can usually be located by tapping or moving the components to duplicate the noise or by pressing on the components while driving to stop the noise. Most of these incidents can be repaired by applying felt cloth tape or silicone spray (in hard to reach areas). Urethane pads can be used to insulate wiring harness.

CAUTION:
Do not use silicone spray to isolate a squeak or rattle. If you saturate the area with silicone, you will not be able to recheck the repair.

CENTER CONSOLE

Components to pay attention to include:

1. Shifter assembly cover to finisher
2. A/C control unit and cluster lid C
3. Wiring harnesses behind audio and A/C control unit

The instrument panel repair and isolation procedures also apply to the center console.

DOORS

Pay attention to the:

1. Finisher and inner panel making a slapping noise
2. Inside handle escutcheon to door finisher
3. Wiring harnesses tapping
4. Door striker out of alignment causing a popping noise on starts and stops

Tapping or moving the components or pressing on them while driving to duplicate the conditions can isolate many of these incidents. You can usually insulate the areas with felt cloth tape or insulator foam blocks from the NISSAN Squeak and Rattle Kit (J-43980) to repair the noise.

TRUNK

Trunk noises are often caused by a loose jack or loose items put into the trunk by the owner.
In addition look for:

1. Trunk lid bumpers out of adjustment
2. Trunk lid striker out of adjustment

3. The trunk lid torsion bars knocking together
4. A loose license plate or bracket

Most of these incidents can be repaired by adjusting, securing or insulating the item(s) or component(s) causing the noise.

SUNROOF/HEADLINING

Noises in the sunroof/headlining area can often be traced to one of the following:

1. Sunroof lid, rail, linkage or seals making a rattle or light knocking noise
2. Sun visor shaft shaking in the holder
3. Front or rear windshield touching headliner and squeaking

Again, pressing on the components to stop the noise while duplicating the conditions can isolate most of these incidents. Repairs usually consist of insulating with felt cloth tape.

OVERHEAD CONSOLE (FRONT AND REAR)

Overhead console noises are often caused by the console panel clips not being engaged correctly. Most of these incidents are repaired by pushing up on the console at the clip locations until the clips engage.
In addition look for:

1. Loose harness or harness connectors.
2. Front console map/reading lamp lens loose.
3. Loose screws at console attachment points.

SEATS

When isolating seat noise it's important to note the position the seat is in and the load placed on the seat when the noise is present. These conditions should be duplicated when verifying and isolating the cause of the noise.
Cause of seat noise include:

1. Headrest rods and holder
2. A squeak between the seat pad cushion and frame
3. The rear seatback lock and bracket

These noises can be isolated by moving or pressing on the suspected components while duplicating the conditions under which the noise occurs. Most of these incidents can be repaired by repositioning the component or applying urethane tape to the contact area.

UNDERHOOD

Some interior noise may be caused by components under the hood or on the engine wall. The noise is then transmitted into the passenger compartment.
Causes of transmitted underhood noise include:

1. Any component mounted to the engine wall
2. Components that pass through the engine wall
3. Engine wall mounts and connectors
4. Loose radiator mounting pins
5. Hood bumpers out of adjustment
6. Hood striker out of adjustment

These noises can be difficult to isolate since they cannot be reached from the interior of the vehicle. The best method is to secure, move or insulate one component at a time and test drive the vehicle. Also, engine RPM or load can be changed to isolate the noise. Repairs can usually be made by moving, adjusting, securing, or insulating the component causing the noise.

Diagnostic Worksheet

INFOID:0000000001704250

Dear Customer:
We are concerned about your satisfaction with your vehicle. Repairing a squeak or rattle sometimes can be very difficult. To help us fix your vehicle right the first time, please take a moment to note the area of the vehicle where the squeak or rattle occurs and under what conditions. You may be asked to take a test drive with a service advisor or technician to ensure we confirm the noise you are hearing.

SQUEAK & RATTLE DIAGNOSTIC WORKSHEET

I. WHERE DOES THE NOISE COME FROM? (circle the area of the vehicle)
The illustrations are for reference only, and may not reflect the actual configuration of your vehicle.

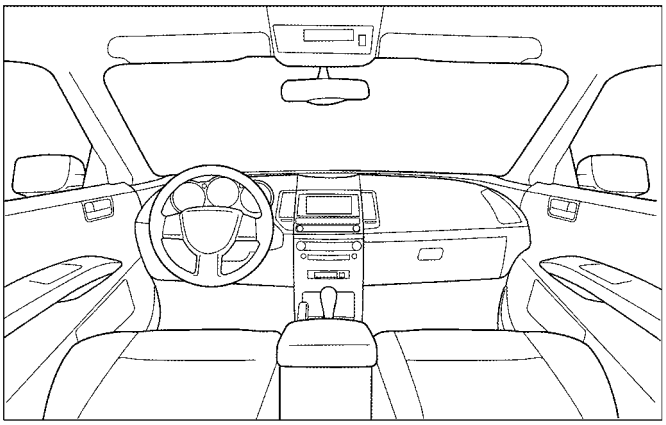

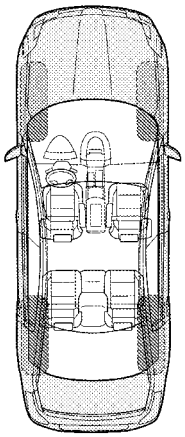

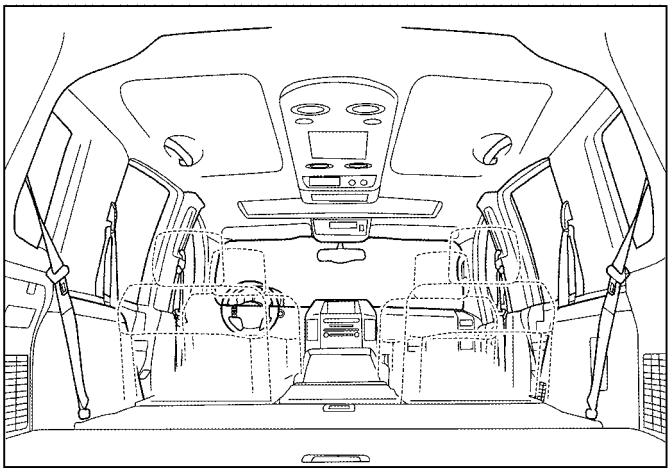

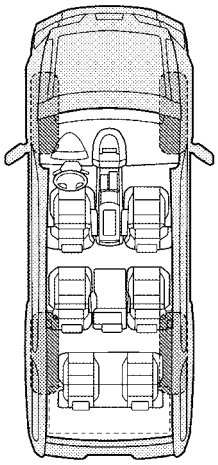

Continue to page 2 of the worksheet and briefly describe the location of the noise or rattle. In addition, please indicate the conditions which are present when the noise occurs.

-1-

LAIA0072E

SQUEAK & RATTLE DIAGNOSTIC WORKSHEET - page 2

Briefly describe the location where the noise occurs:

_____

_____

II. WHEN DOES IT OCCUR? (please check the boxes that apply)

- ☐ Anytime
- ☐ 1st time in the morning
- ☐ Only when it is cold outside
- ☐ Only when it is hot outside
- ☐ After sitting out in the rain
- ☐ When it is raining or wet
- ☐ Dry or dusty conditions
- ☐ Other:

III. WHEN DRIVING:

- ☐ Through driveways
- ☐ Over rough roads
- ☐ Over speed bumps
- ☐ Only about ____ mph
- ☐ On acceleration
- ☐ Coming to a stop
- ☐ On turns: left, right or either (circle)
- ☐ With passengers or cargo
- ☐ Other: _____
- ☐ After driving _____ miles or _____ minutes

IV. WHAT TYPE OF NOISE

- ☐ Squeak (like tennis shoes on a clean floor)
- ☐ Creak (like walking on an old wooden floor)
- ☐ Rattle (like shaking a baby rattle)
- ☐ Knock (like a knock at the door)
- ☐ Tick (like a clock second hand)
- ☐ Thump (heavy muffled knock noise)
- ☐ Buzz (like a bumble bee)

TO BE COMPLETED BY DEALERSHIP PERSONNEL

Test Drive Notes:

_____

_____

_____

	YES	NO	Initials of person performing
Vehicle test driven with customer	☐	☐	_____
- Noise verified on test drive	☐	☐	_____
- Noise source located and repaired	☐	☐	_____
- Follow up test drive performed to confirm repair	☐	☐	_____

VIN: _____ Customer Name _____

W.O.# _____ Date: _____

This form must be attached to Work Order

LAIA0071E

ON-VEHICLE REPAIR

INSTRUMENT PANEL ASSEMBLY

Component Parts

INFOID:0000000001704251

SEC. 251•280•487•680•969

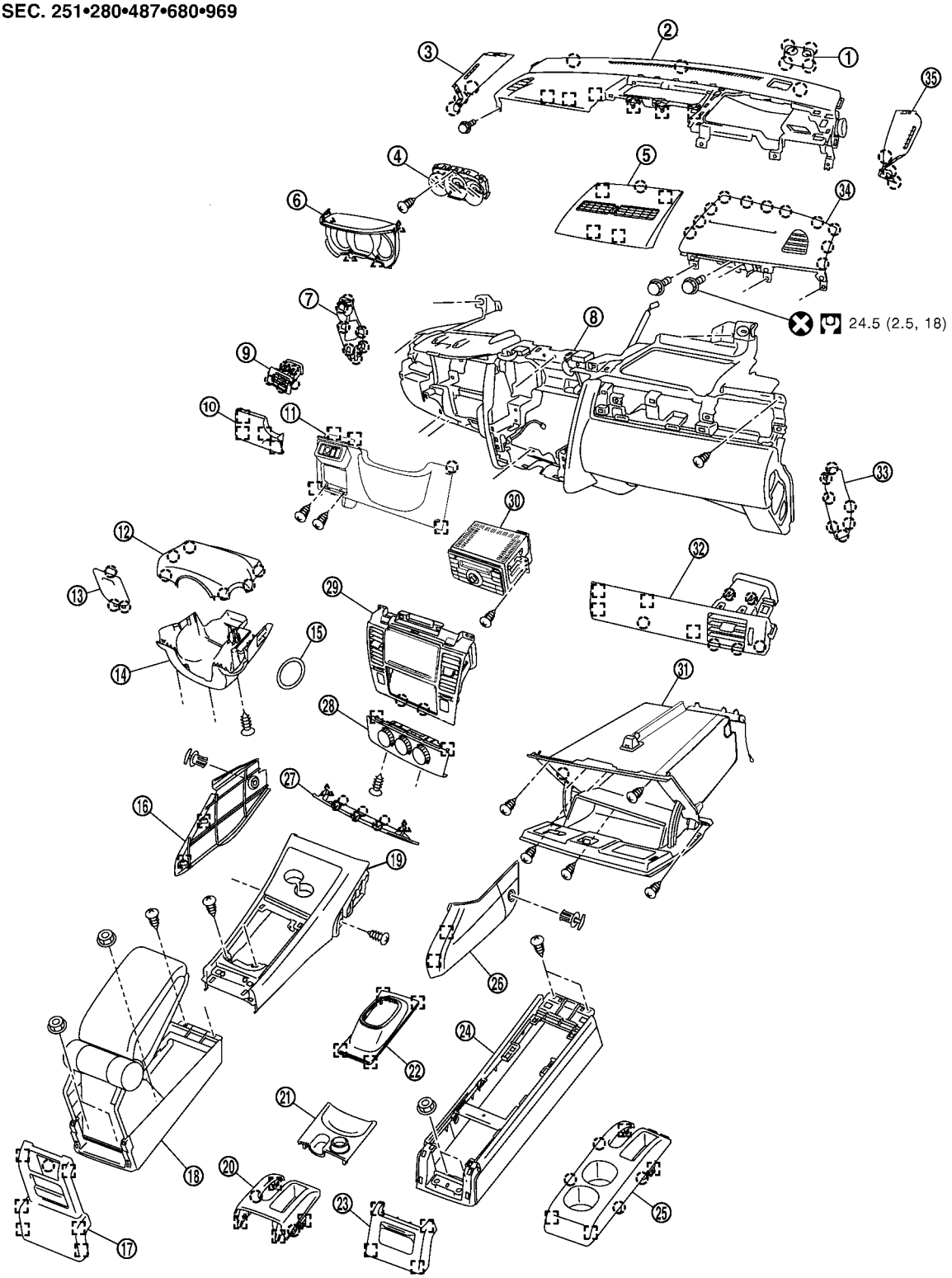

1.	Instrument upper mask	2.	Instrument upper panel assembly	3.	Instrument side panel (LH)
4.	Combination meter	5.	Instrument finisher E	6.	Cluster lid A
7.	Instrument side mask (LH)	8.	Instrument panel & pad	9.	Side ventilator assembly (LH)
10.	Instrument side finisher	11.	Instrument lower finisher	12.	Steering column cover upper
13.	Fuse block lid	14.	Steering column cover lower	15.	Steering lock escutcheon
16.	Instrument lower cover (LH)	17.	Console rear finisher (with armrest)	18.	Console body assembly (with armrest)
19.	Center console	20.	Console mask cover (with armrest)	21.	Console mask
22.	A/T console finisher / M/T console boot / CVT console finisher	23.	Console rear finisher (without armrest)	24.	Console body assembly (without armrest)
25.	Rear cup holder (without armrest)	26.	Instrument lower cover (RH)	27.	Instrument finisher D
28.	Controller	29.	Cluster lid C	30.	Audio unit
31.	Glove box assembly	32.	Side ventilator assembly (RH)	33.	Instrument side mask (RH)
34.	Passenger air bag module assembly	35.	Instrument side panel (RH)		Pawl
	Clip		Metal clip		

Removal and Installation

INFOID:0000000001704252

WORK STEPS

When removing instrument panel & pad, cluster lid A, cluster lid C, passenger air bag module assembly and center console assembly, follow steps in the order shown.

CAUTION:

- **Disconnect both battery cables.**
- **Never tamper with or force air bag lid open, as this may adversely affect air bag performance.**
- **Be careful not to scratch pad and other parts.**

Parts	Reference page	Instrument panel and pad	Cluster lid A	Cluster lid C	Passenger air bag module assembly	Center console assembly
Instrument finisher E	"Removal"	[1]	[1]	[1]		
Cluster lid C	"CLUSTER LID C"	[2]		[2]		
Audio unit	AV-36	[3]				
Front pillar garnish (LH/RH)	EI-37	[4]	[2]		[1]	
Instrument side panel (LH/RH)	IP-10	[5]	[3]		[2]	
Instrument side mask (LH/RH)	IP-10	[6]	[4]		[3]	
Instrument side finisher	IP-10	[7]	[5]			
Side ventilator assembly (LH)	IP-10	[8]	[6]			
Steering lock escutcheon	IP-10	[9]				
Steering column cover upper	IP-10	[10]	[7]			
Steering column cover lower	IP-10	[11]				
Cluster lid A	"CLUSTER LID A"	[12]	[8]			
Combination meter	DI-20	[13]				
Instrument lower finisher	"INSTRUMENT LOWER FINISHER"	[14]				

Parts	Reference page	Instrument panel and pad	Cluster lid A	Cluster lid C	Passenger air bag module assembly	Center console assembly
Glove box assembly	"GLOVE BOX ASSEMBLY"	[15]				
Side ventilator assembly (RH)	IP-10	[16]			[4]	
Passenger air bag module assembly	SRS-38	[17]			[5]	
Instrument upper mask	IP-10	[18]				
Instrument finisher D	IP-10	[19]				
Controller	MTC-55	[20]				
Instrument upper panel assembly	IP-10	[21]				
Console mask	"Removal"	[22]				[1]
CVT, A/T console finisher	IP-23	[23]				[2]
M/T console boot	IP-23	[23]				[2]
Console rear finisher	IP-23	[24]				[3]
Console mask cover (with arm rest)	IP-23	[25]				[4]
Rear cup holder (without arm rest)	IP-23	[25]				[4]
Console body assembly	IP-23	[26]				[5]
Instrument lower cover (LH/RH)	"INSTRUMENT LOWER FINISHER"	[27]				[6]
Center console assembly	"CENTER CONSOLE ASSEMBLY"	[28]				[7]
Fuse block lid	IP-10	[29]				
Lighting and turn signal switch	LT-60	[30]				
Wiper & washer switch	WW-22	[31]				
Instrument panel & pad	IP-10	[32]				

[ ]: Number indicates step in removal procedures.

INSTRUMENT PANEL ASSEMBLY

Removal

1. Pull instrument finisher E backward by approximately 30 degrees while disengaging the instrument finisher E metal clips and pawl.

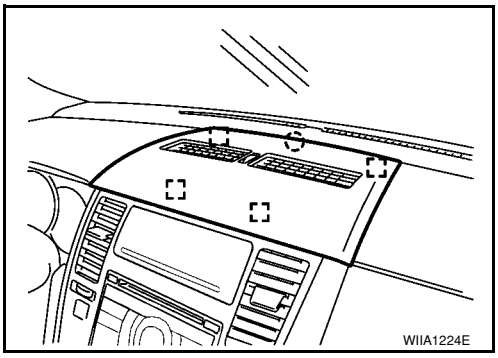

2. Remove cluster lid C.
a. Remove cluster lid C screws.
b. Pull back and disengage pawls and cluster lid C metal clips.
c. Disconnect harness connector and then remove cluster lid C.

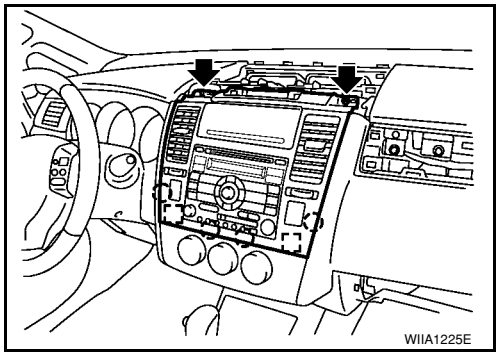

3. Remove audio unit. Refer to AV-36, "Removal and Installation".
4. Remove front pillar garnish. Refer to EI-37.
5. Remove the side panel (LH/RH).
a. Pull up instrument side panel and disengage pawls.
b. Remove instrument side panel.

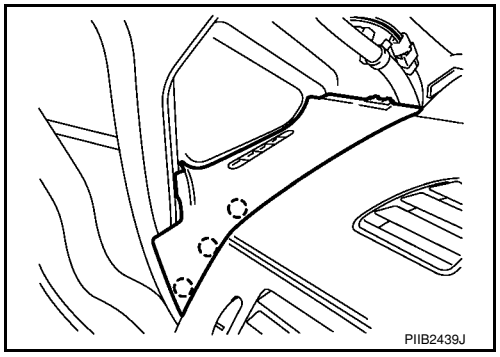

6. Remove instrument side mask (LH/RH).
a. Insert a suitable tool into upper space of instrument mask.
b. Disengage pawls, and then remove instrument side mask.

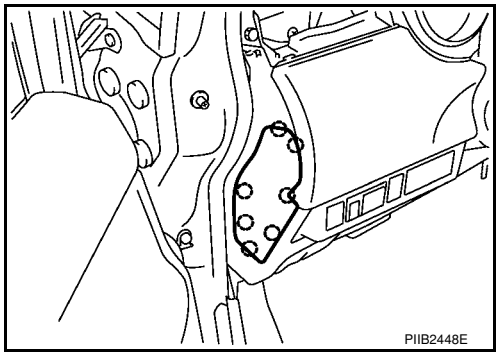

7. Remove instrument side finisher.
a. Insert a suitable tool into space of instrument side finisher.
b. Disengage instrument side finisher metal clips, and then remove instrument side finisher.

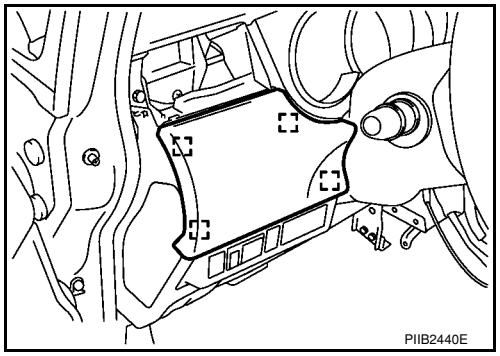

8. Remove side ventilator assembly (LH).

a. Insert a suitable tool into the bottom gap of side ventilator assembly after removing the instrument side mask and push against A and B as shown to disengage the pawls.

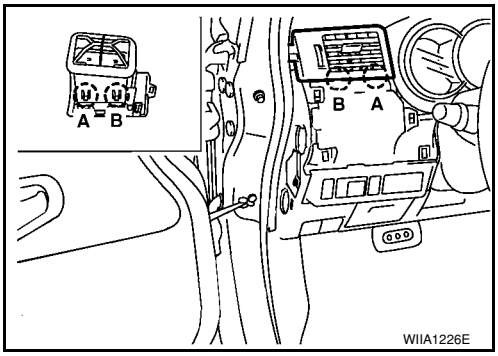

b. Lift the side ventilator up from the bottom, pull backward while disengaging the side ventilator assembly upper pawls, and then remove the side ventilator.

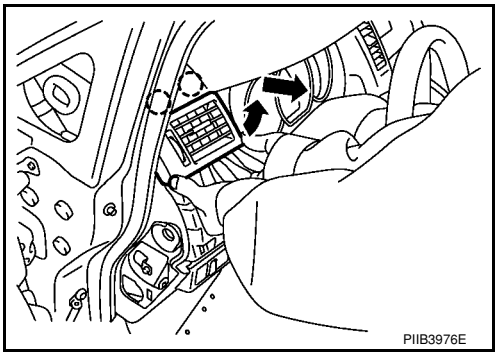

9. Remove steering lock escutcheon.
10. Remove screws, and disengage pawls then remove the steering column cover.
11. Remove cluster lid A.

a. Remove screws from instrument upper panel right side.

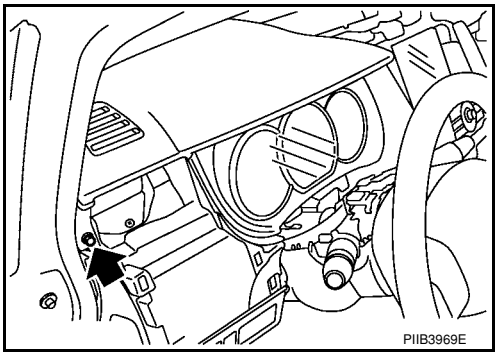

b. Lift the instrument upper panel up, disengage metal clips.

c. Pull backward and disengage clips.

d. Remove cluster lid A.

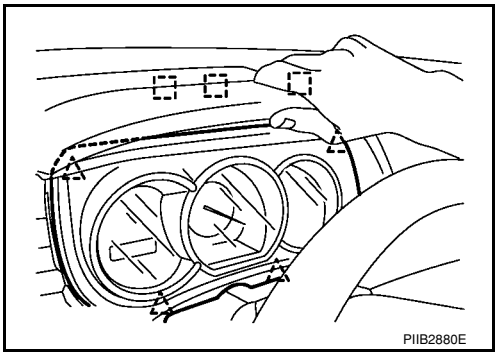

12. Remove combination meter. Refer to DI-20, "Removal and Installation".

13. Remove instrument lower finisher.
a. Disengage pawls and remove fuse block lid.
b. Remove the screws.
c. Pull backward while disengaging the instrument lower finisher clip and pawls.
d. Disconnect in-vehicle sensor and harness connector, and then remove instrument lower finisher.

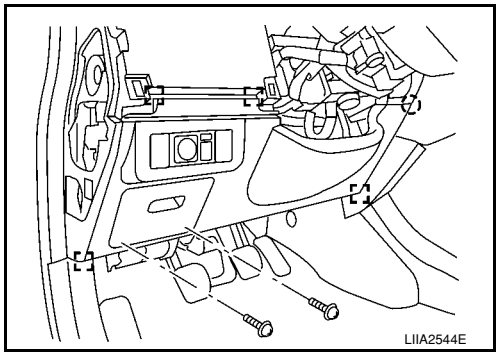

14. Remove glove box. Refer to IP-23, "Disassembly and Assembly".
15. Remove side ventilator assembly.
a. Insert a suitable tool into the side ventilator assembly from center console side, disengage the clips and pawl of instrument panel pad.

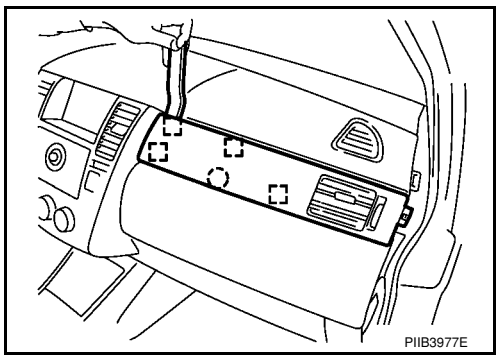

b. Reach through the glove box compartment by hand to the backside of the side ventilator and push against A as shown to engage the pawl.
c. Insert a suitable tool into the bottom gap of side ventilator assembly after removing the instrument side mask and push against B as shown to disengage the pawl.

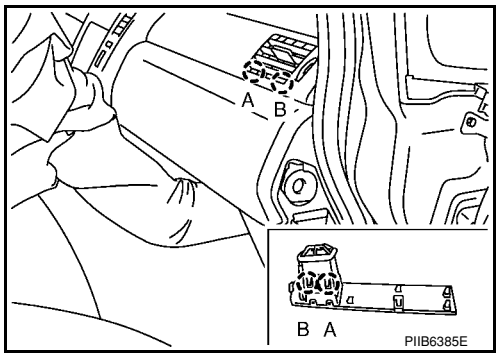

d. Lift the side ventilator assembly up from the bottom, pull backward while disengaging the side ventilator assembly upper pawls, and then remove the side ventilator assembly.

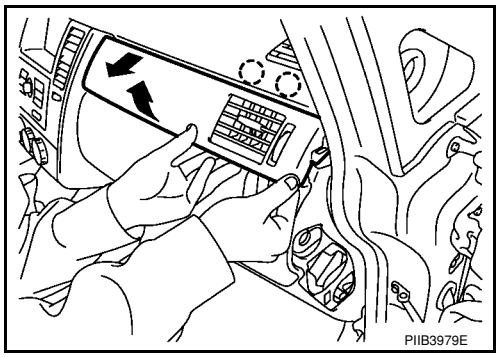

16. Remove front passenger air bag module. Refer to SRS-38.

17. Remove instrument upper mask.
a. Insert a remover into backside space of instrument upper mask.
b. Disconnect harness connector, and then remove instrument upper mask.

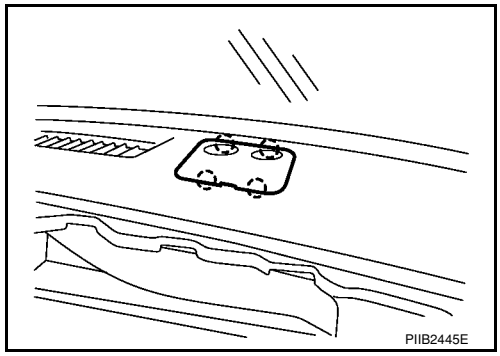

18. Remove instrument finisher D.
a. Insert a remover into upper space of instrument finisher D.
b. Disengage clips and pawls, then remove instrument finisher D.

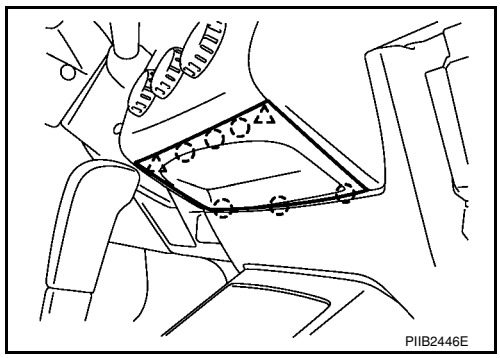

19. Remove controller. Refer to MTC-55.
20. Remove instrument upper panel assembly.
a. Remove bolts and screws.
b. Pull backward and remove instrument upper panel assembly.

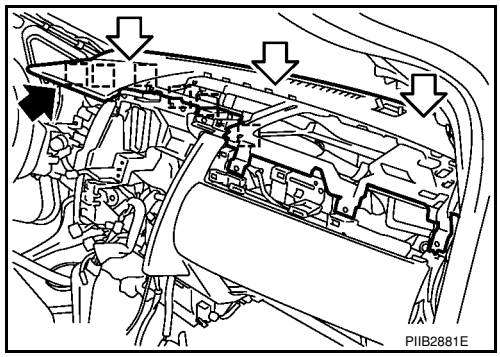

21. Remove lighting & turn signal switch. Refer to LT-60.
22. Remove wiper & washer switch. Refer to WW-22, "Removal and Installation of Front Wiper and Washer Switch".
23. Remove hood opener handle and fuel filler lid opener handle. Refer to BL-15, "Removal and Installation of Hood Lock Control".
24. Remove screws, and then remove instrument panel & pad from passenger door opening portion.

Installation
Installation is in the reverse order of removal.

CLUSTER LID A

Removal

1. Pull instrument finisher E backward by approximately 30 degrees while disengaging the metal clips and pawl.

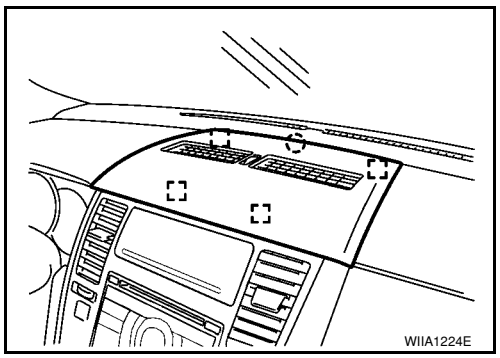

2. Remove front pillar garnish. Refer to EI-37.
3. Pull up instrument side panel and disengage pawls.
4. Remove instrument side panel.

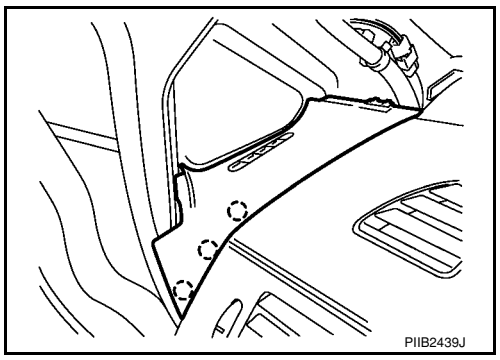

5. Insert a remover into upper space of instrument mask.
6. Disengage pawls, and then remove instrument side mask.

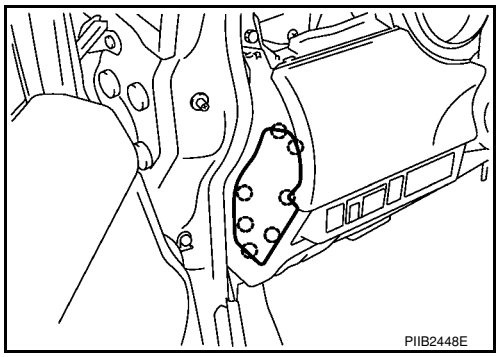

7. Insert a remover into space of instrument side finisher.
8. Disengage metal clips, and then remove instrument side finisher.

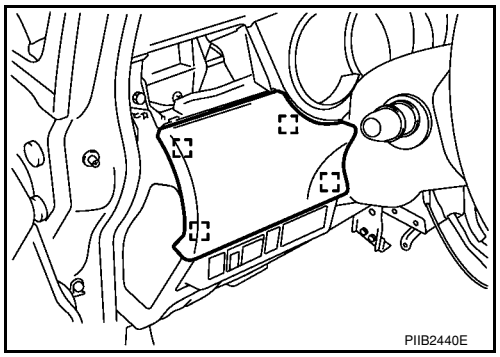

9. Insert suitable tool into the bottom gap of side ventilator assembly after removing the instrument side mask, push against A and B as shown to disengage the pawls.

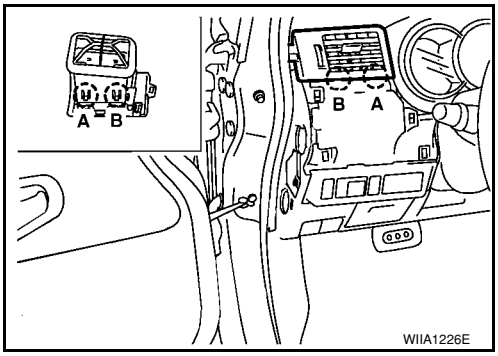

10. Lift the side ventilator up from the bottom, pull backward while disengaging the side ventilator assembly's upper pawls, and then remove the side ventilator.

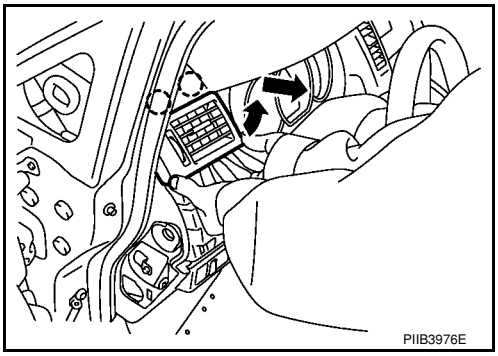

11. Remove screws, and disengage pawls.
12. Remove steering column cover upper.
13. Remove screws from instrument upper panel right side.

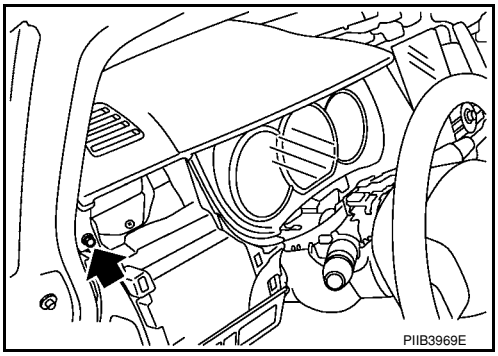

14. Lift the instrument upper panel up, disengage metal clips.
15. Pull backward and disengage clips.
16. Remove cluster lid A.

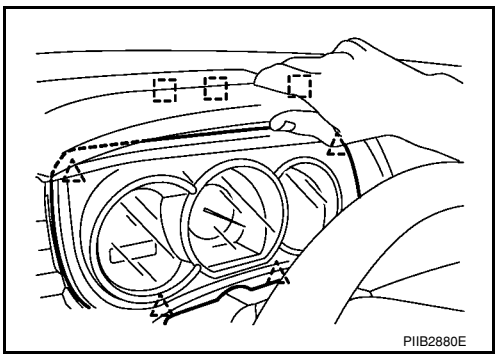

Installation
Installation is in the reverse order of removal.

CLUSTER LID C

Removal

1. Pull instrument finisher E backward by approximately 30 degrees while disengaging the metal clips and pawl.

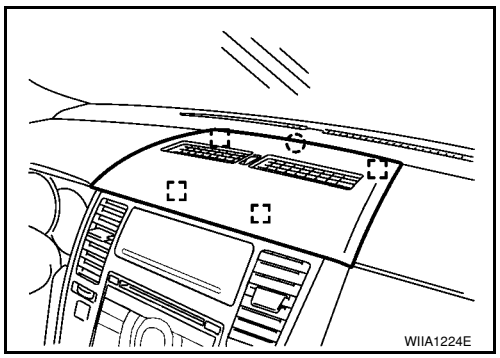

2. Remove screws.
3. Pull back, and disengage pawls and metal clips.
4. Disconnect harness connector, and then remove cluster lid C.

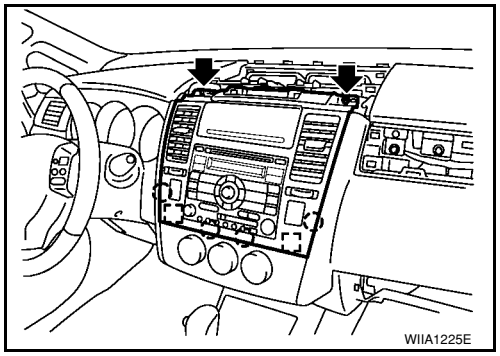

Installation

Installation is in the reverse order of removal.

COMBINATION METER

Removal

1. Pull instrument finisher E backward by approximately 30 degrees while disengaging the metal clips and pawl.

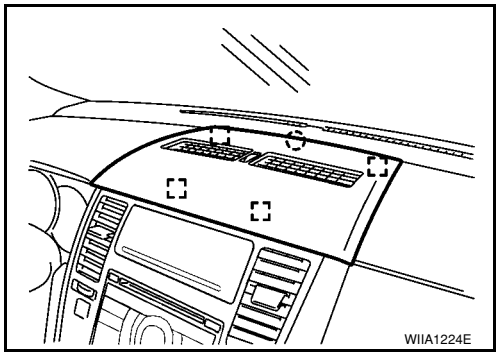

2. Remove front pillar garnish. Refer to EI-37.
3. Pull up instrument side panel and disengage pawls.
4. Remove instrument side panel.

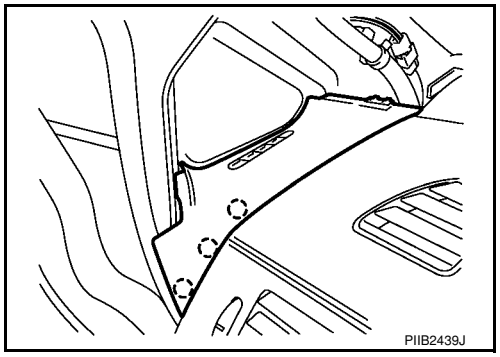

5. Insert a remover into upper space of instrument mask.
6. Disengage pawls, and then remove instrument side mask.

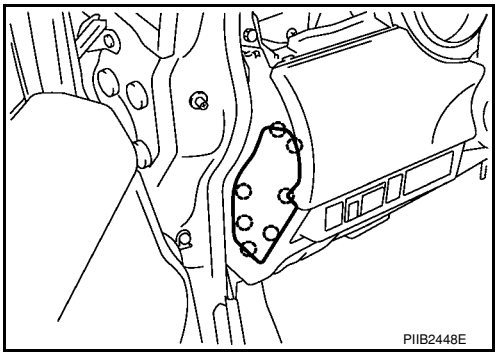

7. Insert a remover into space of instrument side finisher.
8. Disengage metal clips, and then remove instrument side finisher.

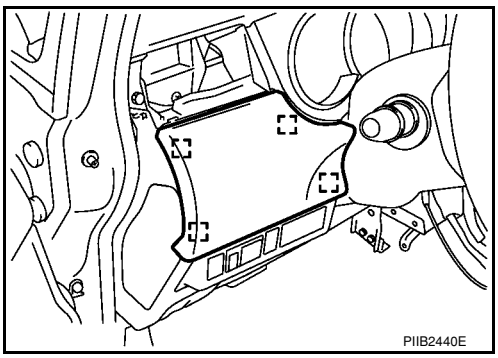

9. Insert suitable tool into the bottom gap of side ventilator assembly after removing the instrument side mask, push against A and B as shown to disengage the pawls.

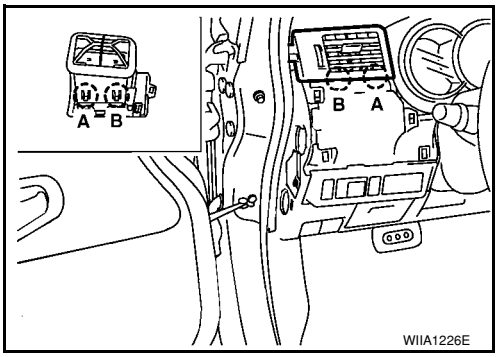

10. Lift the side ventilator up from the bottom, pull backward while disengaging the side ventilator assembly's upper pawls, and then remove the side ventilator.

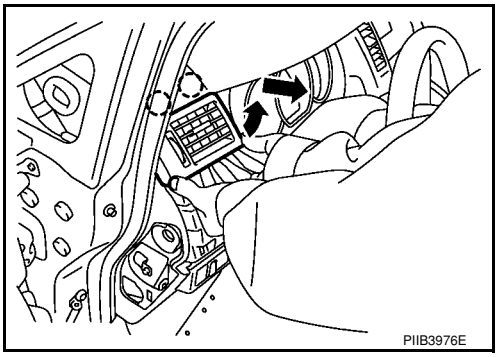

11. Remove screws, and disengage pawls.
12. Remove steering column cover upper.

13. Remove screws from instrument upper panel right side.

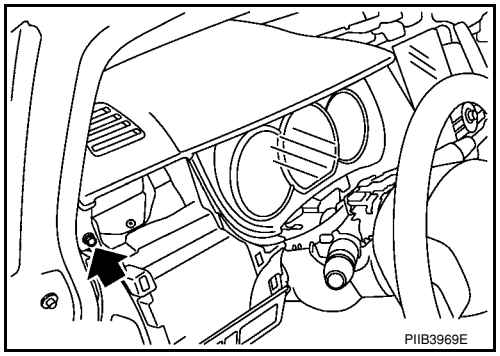

14. Lift the instrument upper panel up, disengage metal clips.
15. Pull backward and disengage clips.
16. Remove cluster lid A.

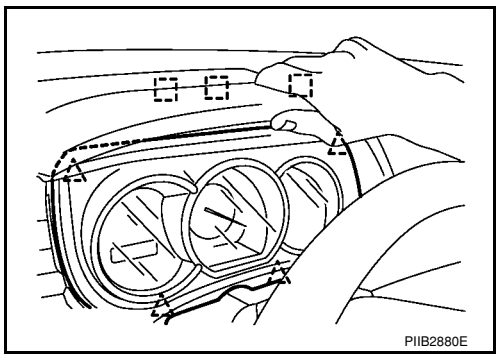

17. Remove screws (A) and metal clip (B), and remove combination meter.

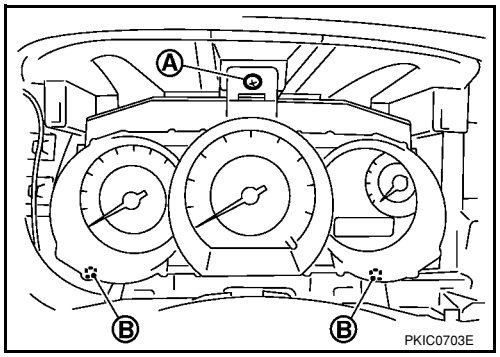

Installation

Installation is in the reverse order of removal.

GLOVE BOX ASSEMBLY

Removal

1. Remove glove box screws.
2. Pull backward while disengaging the glove box assembly pawls.
3. Disconnect lamp harness connector, and then remove glove box assembly.

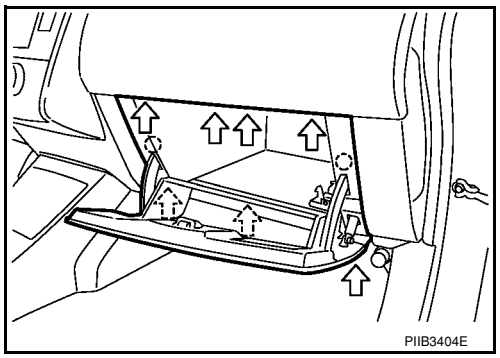

Installation

Installation is in the reverse order of removal.

INSTRUMENT LOWER FINISHER

Removal

1. Pull backward while disengage the instrument lower finisher's clip and pawls.
2. Disconnect in-vehicle sensor and harness connector, and then remove instrument lower finisher.

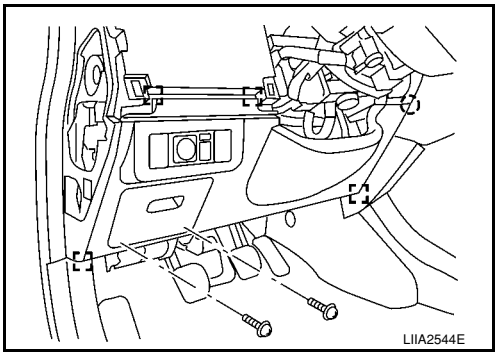

Installation

Installation is in the reverse order of removal.

CENTER CONSOLE ASSEMBLY

Removal

1. Insert a suitable tool into front side space of console mask, and disengage metal clips.
2. Disconnect harness connector, and then remove console mask.

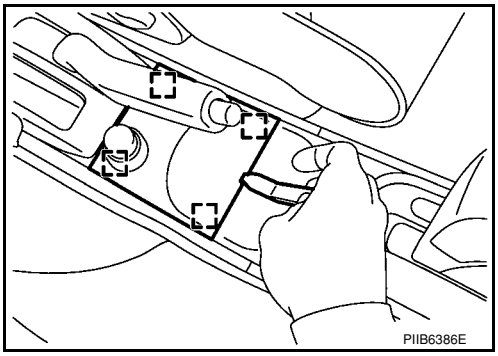

3. Place the selector lever in "D" position (A/T and CVT only).
4. Remove selector lever knob (A/T and CVT only). Refer to CVT-167, "Removal and Installation" (CVT), AT-203, "Control Device Removal and Installation" (A/T).
5. Pull up and disengage A/T and CVT console finisher metal clips (A/T and CVT only).
6. Remove A/T and CVT console finisher (A/T and CVT only).

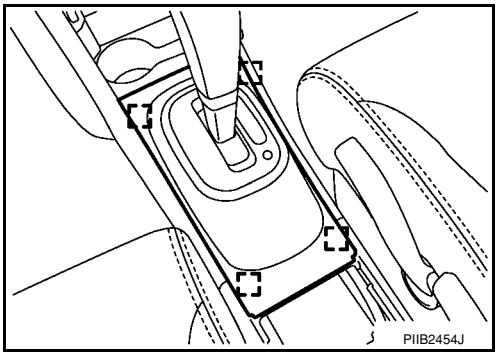

7. Remove shift knob (M/T only). Refer to MT-49.
8. Pull up and disengage M/T console boot metal clips (M/T only).
9. Remove M/T console boot (M/T only).
10. Disengage console rear finisher metal clips and pawl.
11. Remove console rear finisher.

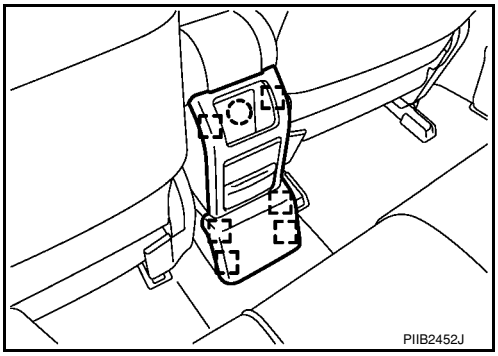

12. Disengage console mask cover metal clips and pawls, and then remove console mask cover (with armrest).

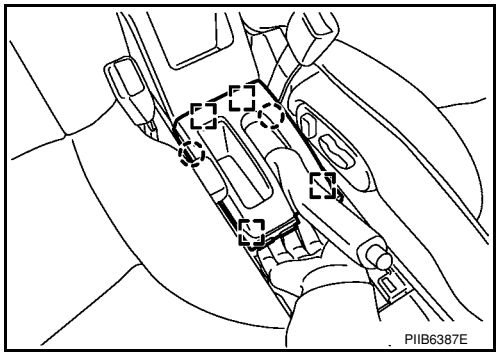

13. Disengage rear cup holder metal clips and pawls (without armrest).
14. Remover rear cup holder (without armrest).

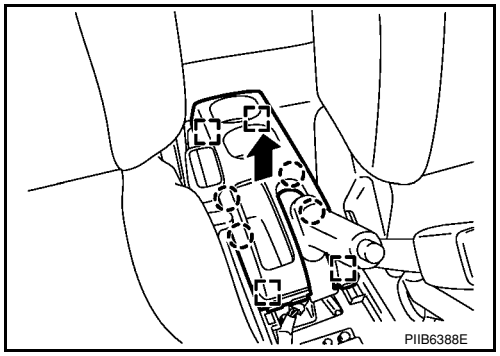

15. Remove console body assembly screws and nut.
16. Disconnect harness connector, and then remove console body assembly.
17. Remove both of the instrument lower cover LH and RH clips.
18. Disengage instrument lower cover LH and RH metal clips and remove both of the instrument lower cover LH and RH.

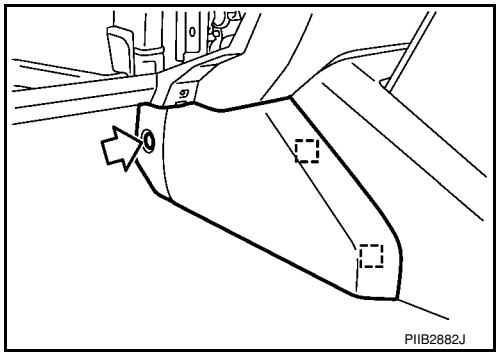

19. Remove screws and then remove center console.

Installation

Installation is in the reverse order of removal.

Disassembly and Assembly

INFOID:0000000001704253

GLOVE BOX ASSEMBLY

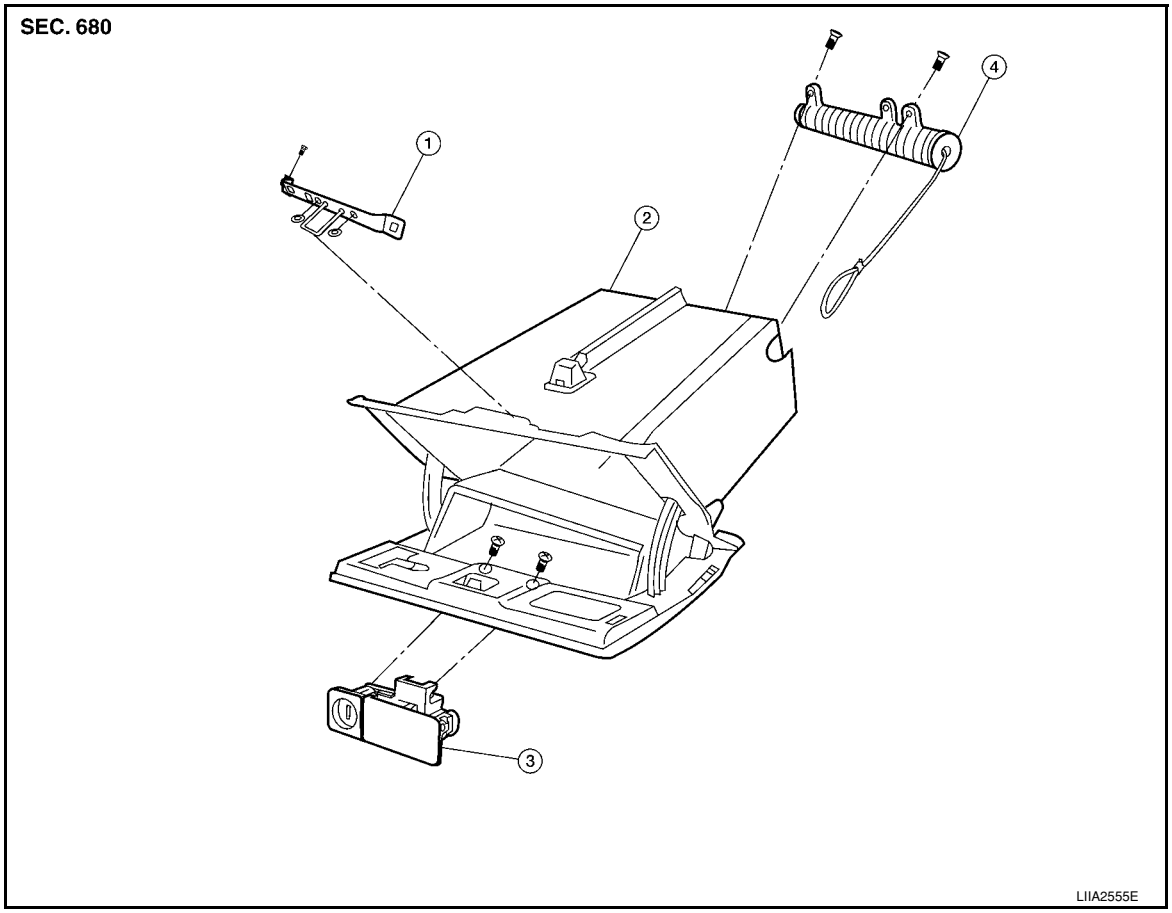

1. Glove box striker
2. Glove box
3. Glove box latch
4. Damper

Disassembly

1. Remove screws of damper, and then remove damper.
2. Remove screws of glove box striker, and then remove glove box striker.
3. Remove screws of glove box latch, and then remove glove box latch.

Assembly

Assembly is in the reverse order of disassembly.

CENTER CONSOLE ASSEMBLY

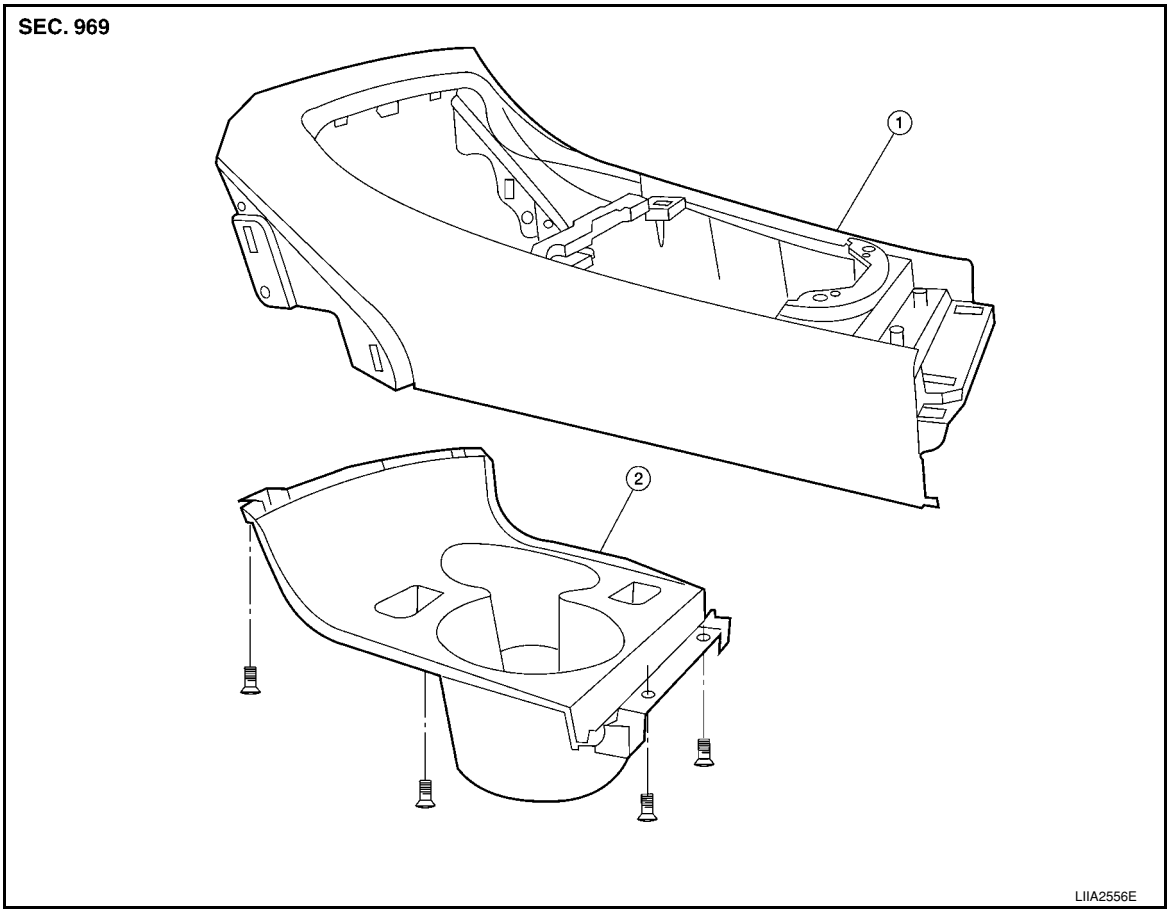

1. Center console
2. Front cup holder

Disassembly
Remove the four screws, and then remove front cup holder from center console.

Assembly
Assembly is in the reverse order of disassembly.

COMBINATION METER

Disassembly
Disengage the eight tabs to separate front cover (1) from the unified meter control unit assembly (2).

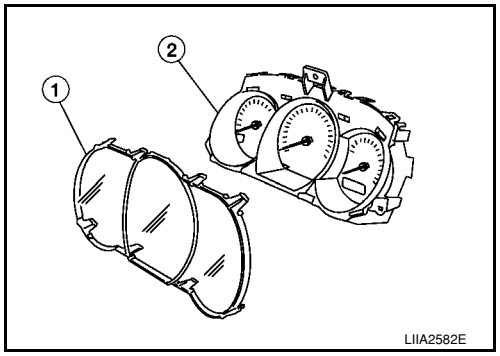

Assembly
Assembly is in the reverse order of disassembly.

SECTION LAN

LAN SYSTEM

CONTENTS

CAN FUNDAMENTAL

PRECAUTION 5

PRECAUTIONS 5
- Precautions for Trouble Diagnosis 5
- Precautions for Harness Repair 5

FUNCTION DIAGNOSIS 6

CAN COMMUNICATION SYSTEM 6
- System Description 6
- System Diagram 6
- CAN Communication Control Circuit 7

DIAG ON CAN 8
- Description 8
- System Diagram 8

TROUBLE DIAGNOSIS 9
- Condition of Error Detection 9
- Symptom When Error Occurs in CAN Communication System 9
- CAN Diagnosis with CONSULT-III 12
- Self-Diagnosis 12
- CAN Diagnostic Support Monitor 12
- How to Use CAN Communication Signal Chart 14

BASIC INSPECTION 15

DIAGNOSIS AND REPAIR WORKFLOW 15
- Trouble Diagnosis Flow Chart 15
- Trouble Diagnosis Procedure 15

CAN

HOW TO USE THIS MANUAL 20

HOW TO USE THIS SECTION 20
- Caution 20
- Abbreviation List 20

PRECAUTION 21

PRECAUTIONS 21
- Precaution for Supplemental Restraint System (SRS) "AIR BAG" and "SEAT BELT PRE-TENSIONER" 21
- Precautions for Trouble Diagnosis 21
- Precautions for Harness Repair 21

BASIC INSPECTION 22

DIAGNOSIS AND REPAIR WORKFLOW 22
- Interview Sheet 22

FUNCTION DIAGNOSIS 23

CAN COMMUNICATION SYSTEM 23
- CAN System Specification Chart 23
- CAN Communication Signal Chart 23

COMPONENT DIAGNOSIS 26

CAN COMMUNICATION SYSTEM 26
- Component Parts Location 26
- Schematic 27
- Wiring Diagram - CAN - 28

MALFUNCTION AREA CHART 30
- Main Line 30
- Branch Line 30
- Short Circuit 30

MAIN LINE BETWEEN DLC AND ABS CIRCUIT 31
- Diagnosis Procedure 31

MAIN LINE BETWEEN DLC AND TCM CIRCUIT 32
- Diagnosis Procedure 32

ECM BRANCH LINE CIRCUIT 33
- Diagnosis Procedure 33

BCM BRANCH LINE CIRCUIT 34
- Diagnosis Procedure 34

DLC BRANCH LINE CIRCUIT 35
Diagnosis Procedure 35

EPS BRANCH LINE CIRCUIT 36
Diagnosis Procedure 36

I-KEY BRANCH LINE CIRCUIT 37
Diagnosis Procedure 37

M&A BRANCH LINE CIRCUIT 38
Diagnosis Procedure 38

ABS BRANCH LINE CIRCUIT 39
Diagnosis Procedure 39

TCM BRANCH LINE CIRCUIT 40
Diagnosis Procedure 40

IPDM-E BRANCH LINE CIRCUIT 41
Diagnosis Procedure 41

CAN COMMUNICATION CIRCUIT 42
Diagnosis Procedure 42

CAN SYSTEM (TYPE 1)

COMPONENT DIAGNOSIS 44

ECM BRANCH LINE CIRCUIT 44
Diagnosis Procedure 44

BCM BRANCH LINE CIRCUIT 45
Diagnosis Procedure 45

DLC BRANCH LINE CIRCUIT 46
Diagnosis Procedure 46

EPS BRANCH LINE CIRCUIT 47
Diagnosis Procedure 47

M&A BRANCH LINE CIRCUIT 48
Diagnosis Procedure 48

IPDM-E BRANCH LINE CIRCUIT 49
Diagnosis Procedure 49

CAN COMMUNICATION CIRCUIT 50
Diagnosis Procedure 50

CAN SYSTEM (TYPE 2)

COMPONENT DIAGNOSIS 52

ECM BRANCH LINE CIRCUIT 52
Diagnosis Procedure 52

BCM BRANCH LINE CIRCUIT 53
Diagnosis Procedure 53

DLC BRANCH LINE CIRCUIT 54
Diagnosis Procedure 54

EPS BRANCH LINE CIRCUIT 55
Diagnosis Procedure 55

I-KEY BRANCH LINE CIRCUIT 56
Diagnosis Procedure 56

M&A BRANCH LINE CIRCUIT 57
Diagnosis Procedure 57

IPDM-E BRANCH LINE CIRCUIT 58
Diagnosis Procedure 58

CAN COMMUNICATION CIRCUIT 59
Diagnosis Procedure 59

CAN SYSTEM (TYPE 3)

COMPONENT DIAGNOSIS 61

MAIN LINE BETWEEN DLC AND ABS CIRCUIT 61
Diagnosis Procedure 61

ECM BRANCH LINE CIRCUIT 62
Diagnosis Procedure 62

BCM BRANCH LINE CIRCUIT 63
Diagnosis Procedure 63

DLC BRANCH LINE CIRCUIT 64
Diagnosis Procedure 64

EPS BRANCH LINE CIRCUIT 65
Diagnosis Procedure 65

M&A BRANCH LINE CIRCUIT 66
Diagnosis Procedure 66

ABS BRANCH LINE CIRCUIT 67
Diagnosis Procedure 67

IPDM-E BRANCH LINE CIRCUIT 68
Diagnosis Procedure 68

CAN COMMUNICATION CIRCUIT 69
Diagnosis Procedure 69

CAN SYSTEM (TYPE 4)

COMPONENT DIAGNOSIS 71

MAIN LINE BETWEEN DLC AND ABS CIRCUIT 71
Diagnosis Procedure 71

ECM BRANCH LINE CIRCUIT 72
Diagnosis Procedure 72

BCM BRANCH LINE CIRCUIT 73
Diagnosis Procedure 73

DLC BRANCH LINE CIRCUIT 74
Diagnosis Procedure 74

EPS BRANCH LINE CIRCUIT 75
Diagnosis Procedure 75

I-KEY BRANCH LINE CIRCUIT .....

Diagnosis Procedure 76

M&A BRANCH LINE CIRCUIT 77
Diagnosis Procedure 77

ABS BRANCH LINE CIRCUIT 78
Diagnosis Procedure 78

IPDM-E BRANCH LINE CIRCUIT 79
Diagnosis Procedure 79

CAN COMMUNICATION CIRCUIT 80
Diagnosis Procedure 80

CAN SYSTEM (TYPE 5)

COMPONENT DIAGNOSIS 82

MAIN LINE BETWEEN DLC AND TCM CIRCUIT 82
Diagnosis Procedure 82

ECM BRANCH LINE CIRCUIT 83
Diagnosis Procedure 83

BCM BRANCH LINE CIRCUIT 84
Diagnosis Procedure 84

DLC BRANCH LINE CIRCUIT 85
Diagnosis Procedure 85

EPS BRANCH LINE CIRCUIT 86
Diagnosis Procedure 86

M&A BRANCH LINE CIRCUIT 87
Diagnosis Procedure 87

TCM BRANCH LINE CIRCUIT 88
Diagnosis Procedure 88

IPDM-E BRANCH LINE CIRCUIT 89
Diagnosis Procedure 89

CAN COMMUNICATION CIRCUIT 90
Diagnosis Procedure 90

CAN SYSTEM (TYPE 6)

COMPONENT DIAGNOSIS 92

MAIN LINE BETWEEN DLC AND TCM CIRCUIT 92
Diagnosis Procedure 92

ECM BRANCH LINE CIRCUIT 93
Diagnosis Procedure 93

BCM BRANCH LINE CIRCUIT 94
Diagnosis Procedure 94

DLC BRANCH LINE CIRCUIT 95
Diagnosis Procedure 95

EPS BRANCH LINE CIRCUIT 96
Diagnosis Procedure 96

M&A BRANCH LINE CIRCUIT 97
Diagnosis Procedure 97

ABS BRANCH LINE CIRCUIT 98
Diagnosis Procedure 98

TCM BRANCH LINE CIRCUIT 99
Diagnosis Procedure 99

IPDM-E BRANCH LINE CIRCUIT 100
Diagnosis Procedure 100

CAN COMMUNICATION CIRCUIT 101
Diagnosis Procedure 101

CAN SYSTEM (TYPE 7)

COMPONENT DIAGNOSIS 103

MAIN LINE BETWEEN DLC AND TCM CIRCUIT 103
Diagnosis Procedure 103

ECM BRANCH LINE CIRCUIT 104
Diagnosis Procedure 104

BCM BRANCH LINE CIRCUIT 105
Diagnosis Procedure 105

DLC BRANCH LINE CIRCUIT 106
Diagnosis Procedure 106

EPS BRANCH LINE CIRCUIT 107
Diagnosis Procedure 107

M&A BRANCH LINE CIRCUIT 108
Diagnosis Procedure 108

TCM BRANCH LINE CIRCUIT 109
Diagnosis Procedure 109

IPDM-E BRANCH LINE CIRCUIT 110
Diagnosis Procedure 110

CAN COMMUNICATION CIRCUIT 111
Diagnosis Procedure 111

CAN SYSTEM (TYPE 8)

COMPONENT DIAGNOSIS 113

MAIN LINE BETWEEN DLC AND TCM CIRCUIT 113
Diagnosis Procedure 113

ECM BRANCH LINE CIRCUIT 114
Diagnosis Procedure 114

BCM BRANCH LINE CIRCUIT 115
Diagnosis Procedure 115

DLC BRANCH LINE CIRCUIT 116
Diagnosis Procedure 116

EPS BRANCH LINE CIRCUIT 117

Diagnosis Procedure 117

I-KEY BRANCH LINE CIRCUIT 118
Diagnosis Procedure 118

M&A BRANCH LINE CIRCUIT 119
Diagnosis Procedure 119

TCM BRANCH LINE CIRCUIT 120
Diagnosis Procedure 120

IPDM-E BRANCH LINE CIRCUIT 121
Diagnosis Procedure 121

CAN COMMUNICATION CIRCUIT 122
Diagnosis Procedure 122

CAN SYSTEM (TYPE 9)

COMPONENT DIAGNOSIS 124

MAIN LINE BETWEEN DLC AND TCM CIRCUIT 124
Diagnosis Procedure 124

ECM BRANCH LINE CIRCUIT 125
Diagnosis Procedure 125

BCM BRANCH LINE CIRCUIT 126
Diagnosis Procedure 126

DLC BRANCH LINE CIRCUIT 127
Diagnosis Procedure 127

EPS BRANCH LINE CIRCUIT 128
Diagnosis Procedure 128

M&A BRANCH LINE CIRCUIT 129
Diagnosis Procedure 129

ABS BRANCH LINE CIRCUIT 130
Diagnosis Procedure 130

TCM BRANCH LINE CIRCUIT 131
Diagnosis Procedure 131

IPDM-E BRANCH LINE CIRCUIT 132
Diagnosis Procedure 132

CAN COMMUNICATION CIRCUIT 133
Diagnosis Procedure 133

CAN SYSTEM (TYPE 10)

COMPONENT DIAGNOSIS 135

MAIN LINE BETWEEN DLC AND TCM CIRCUIT 135
Diagnosis Procedure 135

ECM BRANCH LINE CIRCUIT 136
Diagnosis Procedure 136

BCM BRANCH LINE CIRCUIT 137
Diagnosis Procedure 137

DLC BRANCH LINE CIRCUIT 138
Diagnosis Procedure 138

EPS BRANCH LINE CIRCUIT 139
Diagnosis Procedure 139

I-KEY BRANCH LINE CIRCUIT 140
Diagnosis Procedure 140

M&A BRANCH LINE CIRCUIT 141
Diagnosis Procedure 141

ABS BRANCH LINE CIRCUIT 142
Diagnosis Procedure 142

TCM BRANCH LINE CIRCUIT 143
Diagnosis Procedure 143

IPDM-E BRANCH LINE CIRCUIT 144
Diagnosis Procedure 144

CAN COMMUNICATION CIRCUIT 145
Diagnosis Procedure 145

PRECAUTION

PRECAUTIONS

Precautions for Trouble Diagnosis

INFOID:0000000001711198

CAUTION:
- **Never apply 7.0 V or more to the measurement terminal.**
- **Use a tester with open terminal voltage of 7.0 V or less.**
- **Turn the ignition switch OFF and disconnect the battery cable from the negative terminal when checking the harness.**

Precautions for Harness Repair

INFOID:0000000001711199

- Solder the repaired area and wrap tape around the soldered area.
  NOTE:
  A fray of twisted lines must be within 110 mm (4.33 in).

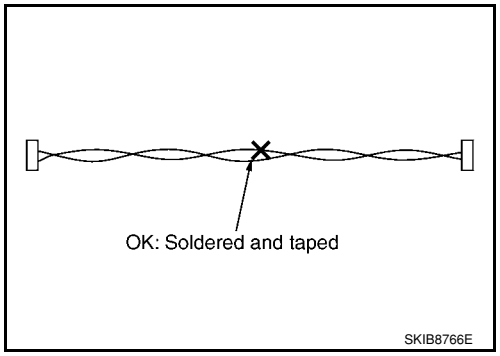

- Bypass connection is never allowed at the repaired area.
  NOTE:
  Bypass connection may cause CAN communication error. The spliced wire becomes separated and the characteristics of twisted line are lost.

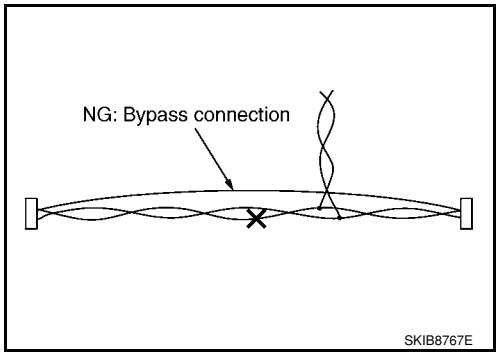

- Replace the applicable harness as an assembly if error is detected on the shield lines of CAN communication line.

FUNCTION DIAGNOSIS

CAN COMMUNICATION SYSTEM

System Description

INFOID:0000000001711200

- CAN communication is a multiplex communication system. This enables the system to transmit and receive large quantities of data at high speed by connecting control units with two communication lines (CAN-H and CAN-L).
- Control units on the CAN network transmit signals using the CAN communication control circuit. They receive only necessary signals from other control units to operate various functions.
- CAN communication lines adopt twisted-pair line style (two lines twisted) for noise immunity.

System Diagram

INFOID:0000000001711201

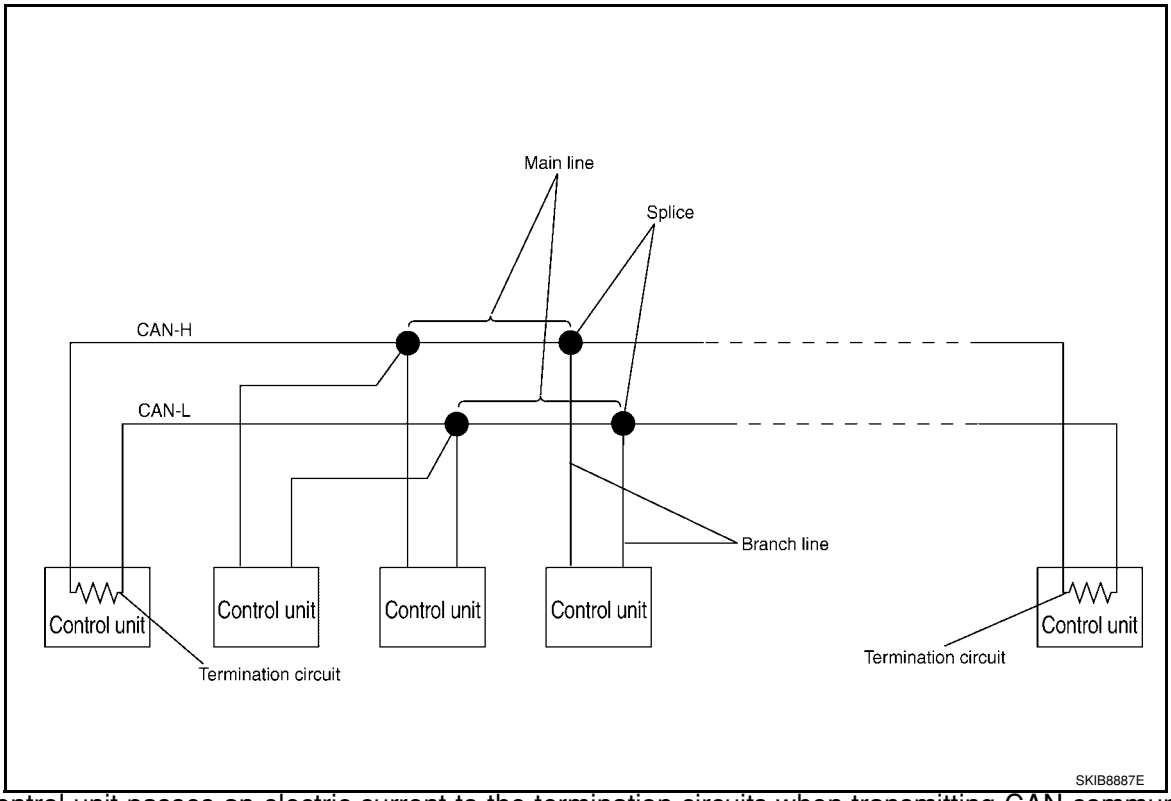

Each control unit passes an electric current to the termination circuits when transmitting CAN communication signal. The termination circuits produce an electrical potential difference between CAN-H and CAN-L. CAN communication system transmits and receives CAN communication signals by the potential difference.

Component	Description
Main line	CAN communication line between splices
Branch line	CAN communication line between splice and a control unit
Splice	A point connecting a branch line with a main line
Termination circuit	Refer to LAN-7, "CAN Communication Control Circuit".

CAN Communication Control Circuit

INFOID:0000000001711202

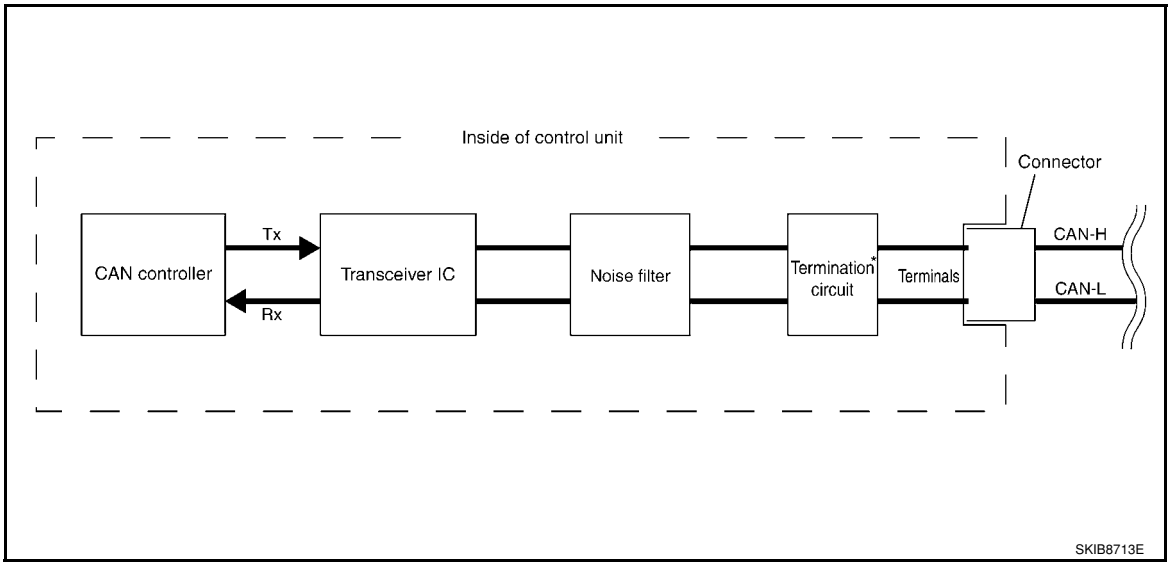

Component	System description
CAN controller	It controls CAN communication signal transmission and reception, error detection, etc.
Transceiver IC	It converts digital signal into CAN communication signal, and CAN communication signal into digital signal.
Noise filter	It eliminates noise of CAN communication signal.
Termination circuit* (Resistance of approx. 120 Ω)	It produces potential difference.

*: These are the only control units wired with both ends of CAN communication system.

DIAG ON CAN

Description

INFOID:0000000001711203

"Diag on CAN" is a diagnosis using CAN communication instead of previous DDL1 and DDL2 communication lines, between control units and diagnosis unit.

System Diagram

INFOID:0000000001711204

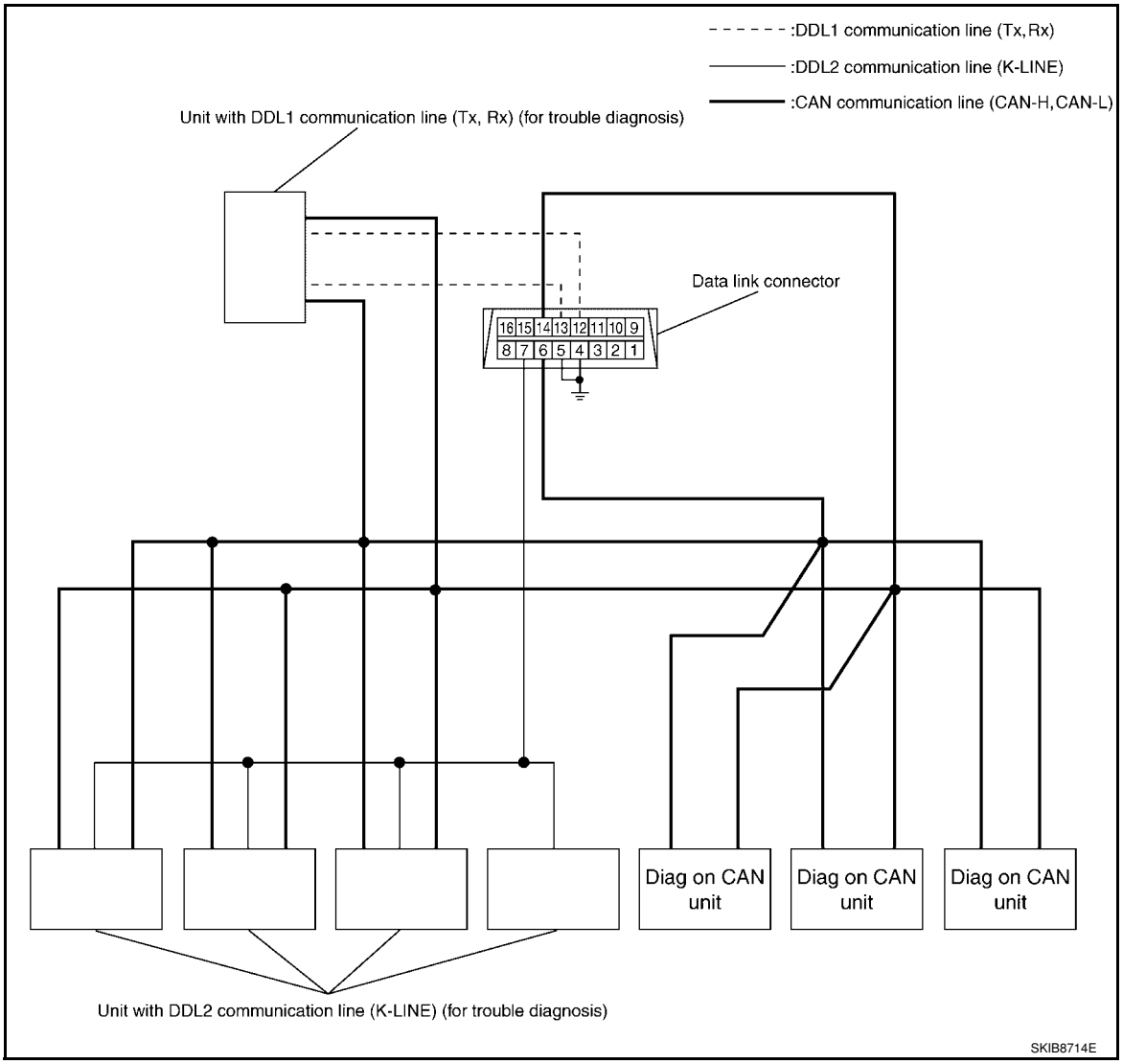

Name	Harness	Description
DDL1	Tx Rx	It is used for trouble diagnosis. (CAN-H and CAN-L are used for controlling)
DDL2	K-LINE	It is used for trouble diagnosis. (CAN-H and CAN-L are used for controlling)
Diag on CAN	CAN-H CAN-L	It is used for trouble diagnosis and control.

TROUBLE DIAGNOSIS

Condition of Error Detection

INFOID:0000000001711205

"U1000" or "U1001" is indicated on SELF-DIAG RESULTS on CONSULT-III if CAN communication signal is not transmitted or received between units for 2 seconds or more.

CAN COMMUNICATION SYSTEM ERROR

- CAN communication line open (CAN-H, CAN-L, or both)
- CAN communication line short (ground, between CAN communication lines, other harnesses)
- Error of CAN communication control circuit of the unit connected to CAN communication line

WHEN "U1000" OR "U1001" IS INDICATED EVEN THOUGH CAN COMMUNICATION SYSTEM IS NORMAL

- Removal/installation of parts: Error may be detected when removing and installing CAN communication unit and related parts while turning the ignition switch ON. (A DTC except for CAN communication may be detected.)
- Fuse blown out (removed): CAN communication of the unit may cease.
- Voltage drop: Error may be detected if voltage drops due to discharged battery when turning the ignition switch ON (Depending on the control unit which carries out CAN communication).
- Error may be detected if the power supply circuit of the control unit, which carries out CAN communication, malfunctions (Depending on the control unit which carries out CAN communication).
- Error may be detected if reprogramming is not completed normally.

NOTE:
CAN communication system is normal if "U1000" or "U1001" is indicated on SELF-DIAG RESULTS of CONSULT-III under the above conditions. Erase the memory of the self-diagnosis of each unit.

Symptom When Error Occurs in CAN Communication System

INFOID:0000000001711206

In CAN communication system, multiple units mutually transmit and receive signals. Each unit cannot transmit and receive signals if any error occurs on CAN communication line. Under this condition, multiple control units related to the root cause malfunction or go into fail-safe mode.

ERROR EXAMPLE

NOTE:
- Each vehicle differs in symptom of each unit under fail-safe mode and CAN communication line wiring.
- Refer to LAN-20, "Abbreviation List" for the unit abbreviation.

Example: TCM branch line open circuit

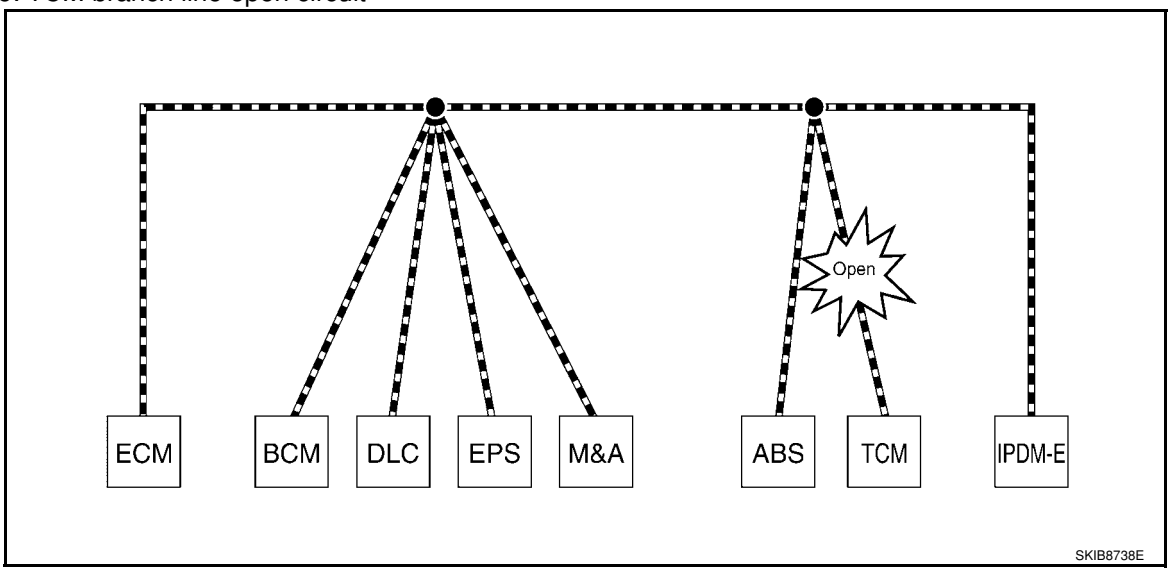

Unit name	Symptom
ECM	Engine torque limiting is affected, and shift harshness increases.
BCM	Reverse warning chime does not sound.

Unit name	Symptom
EPS control unit	Normal operation.
Combination meter	• Shift position indicator and OD OFF indicator turn OFF. • Warning lamps turn ON.
ABS actuator and electric unit (control unit)	Normal operation.
TCM	No impact on operation.
IPDM E/R	Normal operation.

Example: Data link connector branch line open circuit

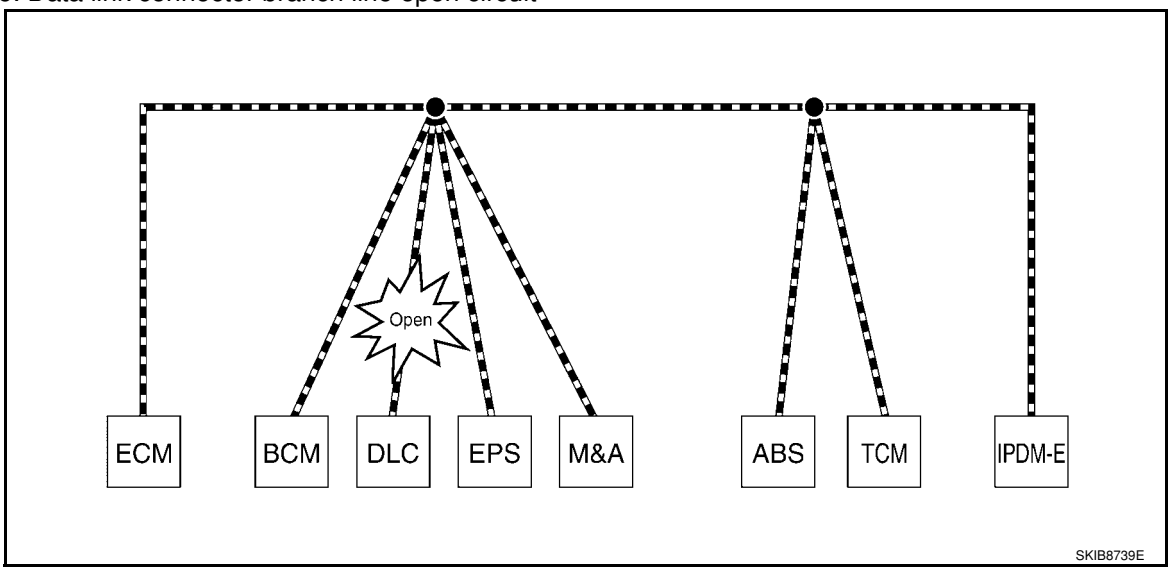

Unit name	Symptom
ECM	Normal operation.
BCM	
EPS control unit	
Combination meter	
ABS actuator and electric unit (control unit)	
TCM	
IPDM E/R	

NOTE:
- When data link connector branch line is open, transmission and reception of CAN communication signals are not affected. Therefore, no symptoms occur. However, be sure to repair malfunctioning circuit.
- The model (all units on CAN communication system are Diag on CAN) cannot perform CAN diagnosis with CONSULT-III if the following error occurs. The error is judged by the symptom.

Error	Difference of symptom
Data link connector branch line open circuit	Normal operation.
CAN-H, CAN-L harness short-circuit	Most of the units which are connected to the CAN communication system enter fail-safe mode or are deactivated.

Example: Main Line Between Data Link Connector and ABS Actuator and Electric Unit (Control Unit) Open Circuit

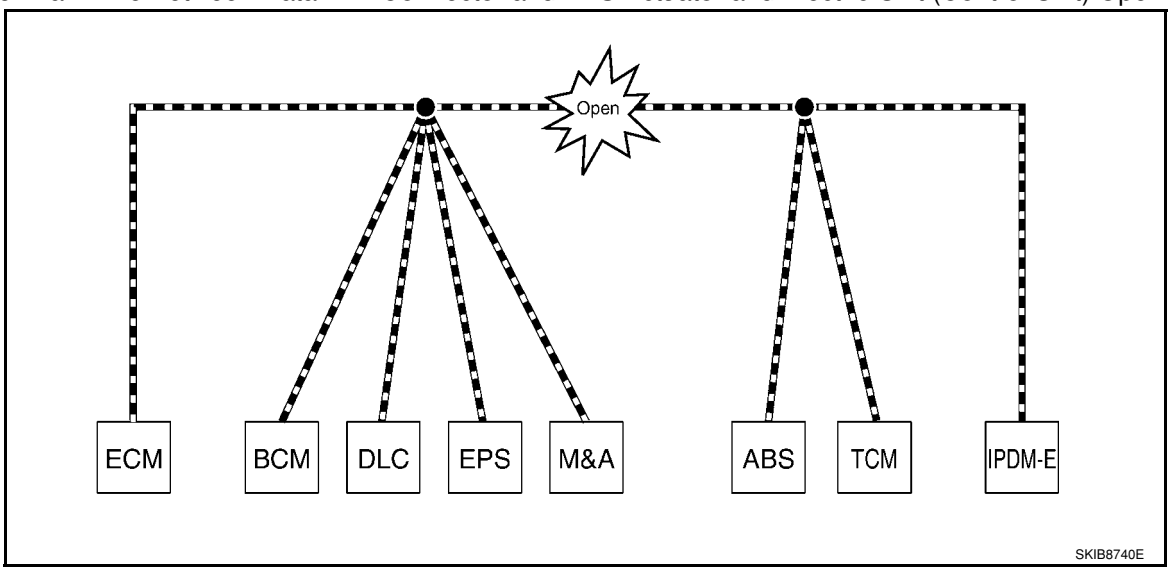

Unit name	Symptom
ECM	Engine torque limiting is affected, and shift harshness increases.
BCM	• Reverse warning chime does not sound. • The front wiper moves under continuous operation mode even though the front wiper switch being in the intermittent position.
EPS control unit	The steering effort increases.
Combination meter	• The shift position indicator and OD OFF indicator turn OFF. • The speedometer is inoperative. • The odo/trip meter stops.
ABS actuator and electric unit (control unit)	Normal operation.
TCM	No impact on operation.
IPDM E/R	When the ignition switch is ON, • The headlamps (Lo) turn ON. • The cooling fan continues to rotate.

Example: CAN-H, CAN-L Harness Short Circuit

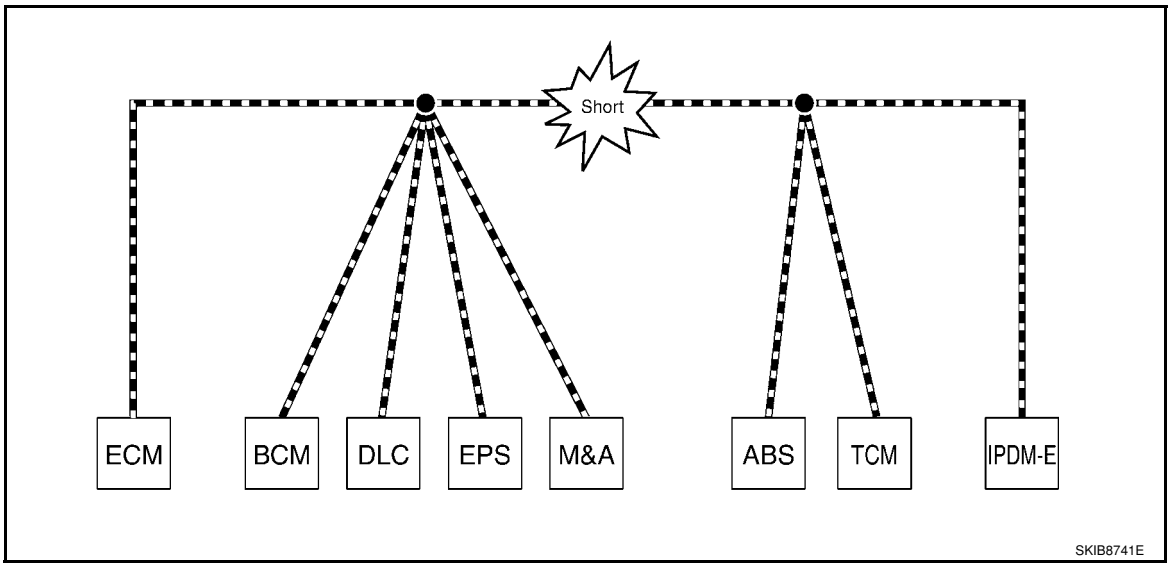

Unit name	Symptom
ECM	• Engine torque limiting is affected, and shift harshness increases. • Engine speed drops.
BCM	• Reverse warning chime does not sound. • The front wiper moves under continuous operation mode even though the front wiper switch being in the intermittent position. • The room lamp does not turn ON. • The engine does not start (if an error or malfunction occurs while turning the ignition switch OFF.) • The steering lock does not release (if an error or malfunction occurs while turning the ignition switch OFF.)
EPS control unit	The steering effort increases.
Combination meter	• The tachometer and the speedometer do not move. • Warning lamps turn ON. • Indicator lamps do not turn ON.
ABS actuator and electric unit (control unit)	Normal operation.
TCM	No impact on operation.
IPDM E/R	When the ignition switch is ON, • The headlamps (Lo) turn ON. • The cooling fan continues to rotate.

CAN Diagnosis with CONSULT-III

INFOID:0000000001711207

CAN diagnosis on CONSULT-III extracts the root cause by receiving the following information.
- Response to the system call
- Control unit diagnosis information
- Self-diagnosis
- CAN diagnostic support monitor

Self-Diagnosis

INFOID:0000000001711208

DTC	Self-diagnosis item (CONSULT-III indication)	DTC detection condition	Inspection/Action
U1000	CAN COMM CIRCUIT	When ECM is not transmitting or receiving CAN communication signal of OBD (emission-related diagnosis) for 2 seconds or more.	Start the inspection. Refer to the applicable section of the indicated control unit.
		When a control unit (except for ECM) is not transmitting or receiving CAN communication signal for 2 seconds or more.	
U1001	CAN COMM CIRCUIT	When ECM is not transmitting or receiving CAN communication signal other than OBD (emission-related diagnosis) for 2 seconds or more.	
U1002	SYSTEM COMM	When a control unit is not transmitting or receiving CAN communication signal for 2 seconds or less.	
U1010	CONTROL UNIT [CAN]	When an error is detected during the initial diagnosis for CAN controller of each control unit.	Replace the control unit indicating “U1010”.

CAN Diagnostic Support Monitor

INFOID:0000000001711209

MONITOR ITEM (CONSULT-III)

Example: CAN DIAG SUPPORT MNTR indication

Without PAST

ECM	PRSNT	PAST
INITIAL DIAG	OK	
TRANSMIT DIAG	OK	
TCM	OK	
VDC/TCS/ABS	UNKWN	
METER/M&A	OK	
ICC	UNKWN	
BCM/SEC	OK	
IPDM E/R	OK	

With PAST

ECM	PRSNT	PAST
TRANSMIT DIAG	OK	OK
VDC/TCS/ABS	-	-
METER/M&A	OK	OK
BCM/SEC	OK	OK
ICC	-	-
HVAC	-	-
TCM	OK	OK
EPS	-	-
IPDM E/R	OK	OK
e4WD	-	-
AWD/4WD	OK	OK

JSMIA0015GB

Without PAST

Item	PRSNT	Description
Initial diagnosis	OK	Normal at present
	NG	Control unit error (Except for some control units)
Transmission diagnosis	OK	Normal at present
	UNKWN	Unable to transmit signals for 2 seconds or more.
		Diagnosis not performed
Control unit name (Reception diagnosis)	OK	Normal at present
	UNKWN	Unable to receive signals for 2 seconds or more.
		Diagnosis not performed
		No control unit for receiving signals. (No applicable optional parts)

With PAST

Item	PRSNT	PAST	Description
Transmission diagnosis	OK	OK	Normal at present and in the past
		1 – 39	Normal at present, but unable to transmit signals for 2 seconds or more in the past. (The number indicates the number of ignition switch cycles from OFF to ON.)
	UNKWN	0	Unable to transmit signals for 2 seconds or more at present.
Control unit name (Reception diagnosis)	OK	OK	Normal at present and in the past
		1 – 39	Normal at present, but unable to receive signals for 2 seconds or more in the past. (The number indicates the number of ignition switch cycles from OFF to ON.)
	UNKWN	0	Unable to receive signals for 2 seconds or more at present.
	–	–	Diagnosis not performed.
			No control unit for receiving signals. (No applicable optional parts)

MONITOR ITEM (ON-BOARD DIAGNOSIS)

NOTE:

For some models, CAN communication diagnosis result is received from the vehicle monitor.

Example: Vehicle Display

Item	Result indicated	Error counter	Description
CAN_COMM (Initial diagnosis)	OK	0	Normal at present
	NG	1 – 50	Control unit error (The number indicates how many times diagnosis has been run.)
CAN_CIRC_1 (Transmission diagnosis)	OK	0	Normal at present
	UNKWN	1 – 50	Unable to transmit for 2 seconds or more at present. (The number indicates how many times diagnosis has been run.)
CAN_CIRC_2 – 9 (Reception diagnosis of each unit)	OK	0	Normal at present
	UNKWN	1 – 50	Unable to transmit for 2 seconds or more at present. (The number indicates how many times diagnosis has been run.)
			Diagnosis not performed.
			No control unit for receiving signals. (No applicable optional parts)

How to Use CAN Communication Signal Chart

INFOID:0000000001711210

The CAN communication signal chart lists the signals needed for trouble diagnosis. It is useful for detecting the root cause by finding a signal related to the symptom, and by checking transmission and reception unit.

Example: Tachometer does not move even though the engine rotates.

T: Transmit R: Receive

Signal name/Connecting unit	ECM	BCM	M&A	STRG	ABS	IPDM-E
A/C compressor feedback signal	T		R			
A/C compressor request signal	T					R
Accelerator pedal position signal	T				R	
Cooling fan motor operation signal	T					R
Engine coolant temperature signal	T		R			
Engine speed signal	T		R		R	
Fuel consumption monitor signal	T		R			
Malfunction indicator lamp signal	T		R			
A/C switch signal	R	T				
Ignition switch signal		T				R
Sleep/wake up signal		T	R			R

No communication between ECM and M&A.

It indicates that an error occurs between ECM and M&A (Shaded area).

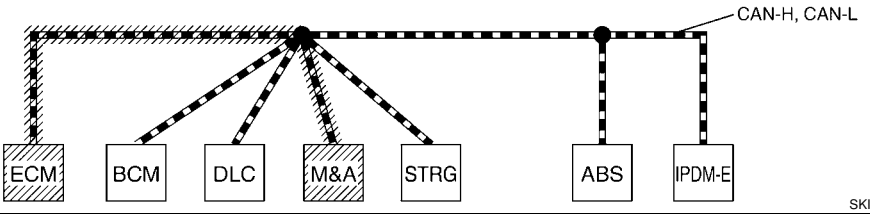

SKIB8715E

BASIC INSPECTION

DIAGNOSIS AND REPAIR WORKFLOW

Trouble Diagnosis Flow Chart

INFOID:0000000001711211

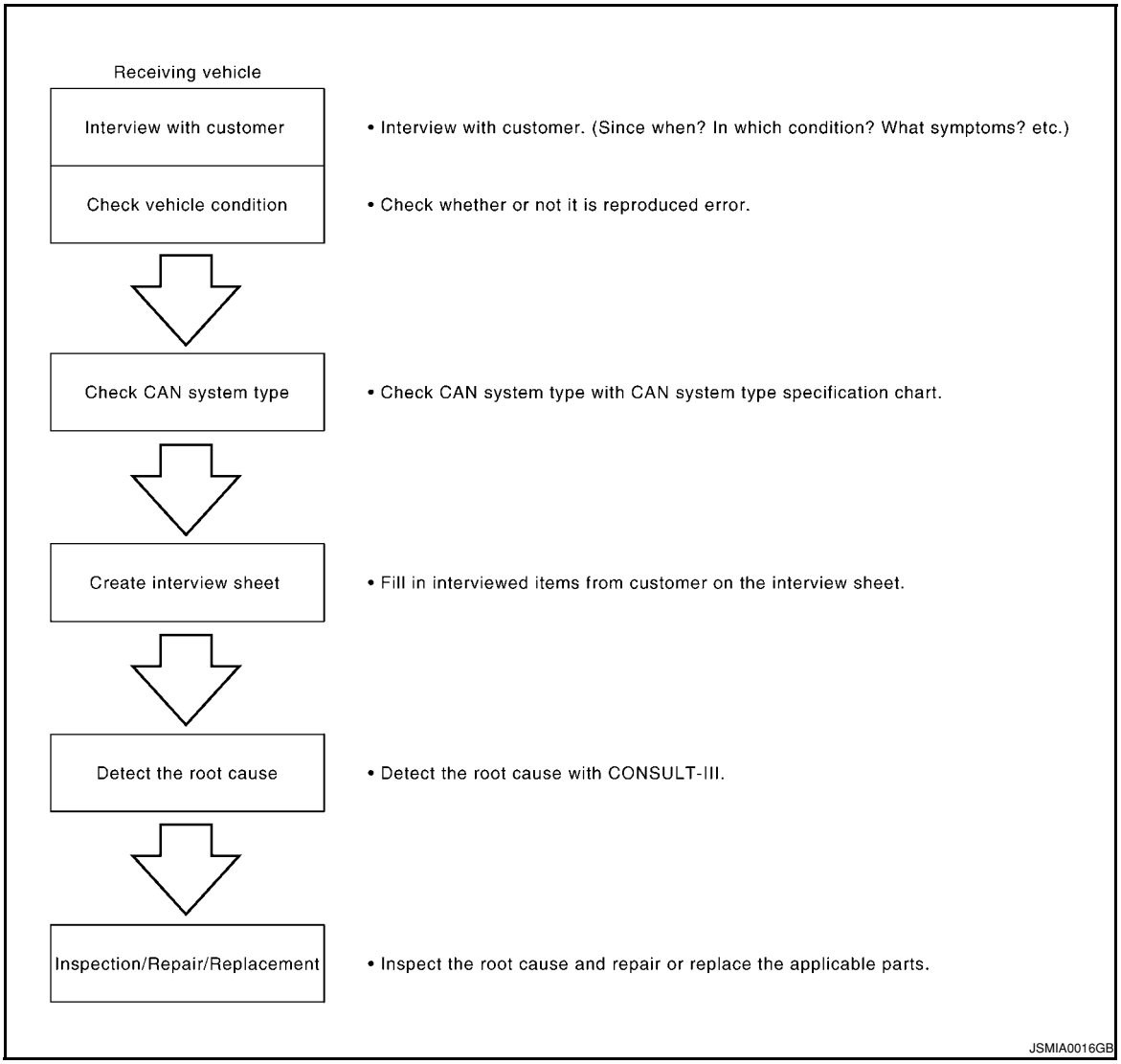

Trouble Diagnosis Procedure

INFOID:0000000001711212

INTERVIEW WITH CUSTOMER

Interview with the customer is important to detect the root cause of CAN communication system errors and to understand vehicle condition and symptoms for proper trouble diagnosis.

Points in interview
- What: Parts name, system name
- When: Date, Frequency
- Where: Road condition, Place
- In what condition: Driving condition/environment
- Result: Symptom

NOTE:
- Check normal units as well as error symptoms.
- Example: Circuit between ECM and the combination meter is judged normal if the customer indicates tachometer functions normally.
- When a CAN communication system error is present, multiple control units may malfunction or go into fail-safe mode.

- Indication of the combination meter is important to detect the root cause because it is the most obvious to the customer, and it performs CAN communication with many units.

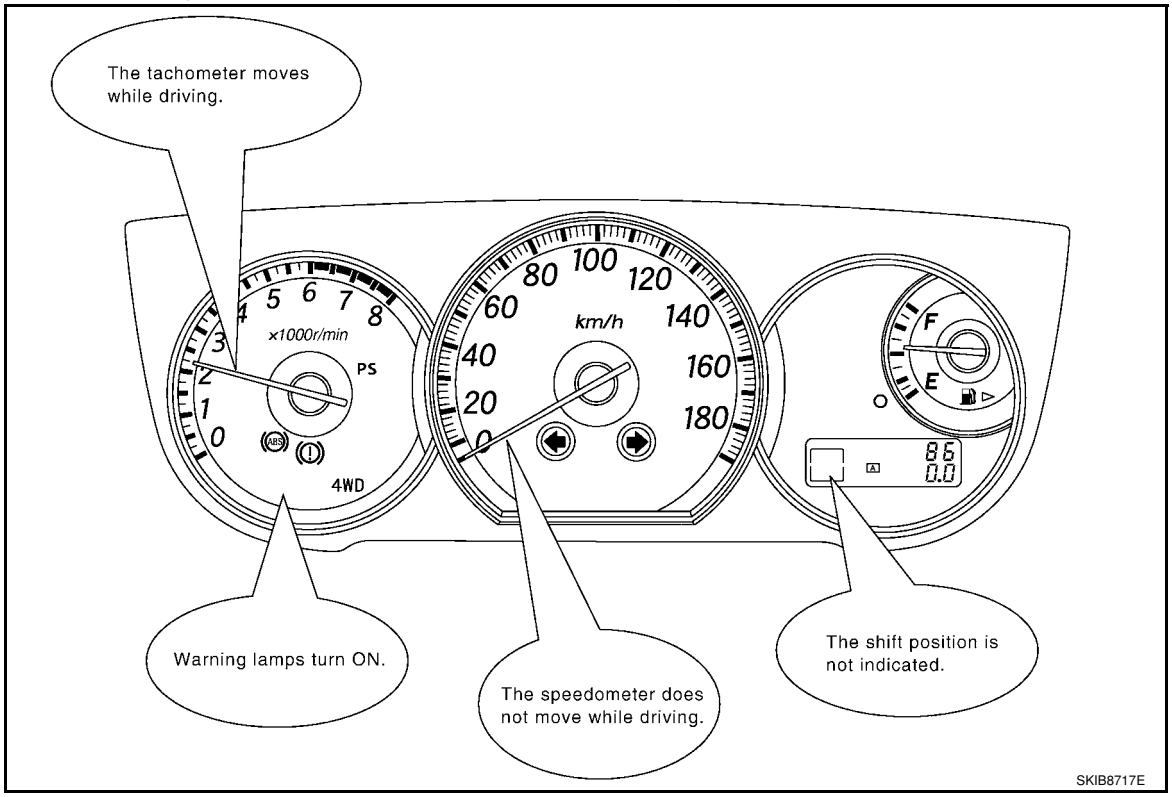

INSPECTION OF VEHICLE CONDITION

Check whether the symptom is reproduced or not.

NOTE:

Do not turn the ignition switch OFF or disconnect the battery cable while reproducing the error. The error may temporarily correct itself, making it difficult to determine the root cause.

CHECK OF CAN SYSTEM TYPE (HOW TO USE CAN SYSTEM TYPE SPECIFICATION CHART)

Determine CAN system type based on vehicle equipment.

NOTE:

- This chart is used if CONSULT-III does not automatically recognize CAN system type.
- There are two styles for CAN system type specification charts. Depending on the number of available system types, either style A or style B may be used.

CAN System Type Specification Chart (Style A)

NOTE:

CAN system type is easily checked with the vehicle equipment identification information shown in the chart.

Example:
Vehicle is equipped as follows: Wagon, AWD, VQ35DE, CVT, VDC, and Intelligent Key system. (shows an example of CAN system type.)

CAN System Specification Chart
Determine CAN system type from the following specification chart.

Body type	Wagon					
Axle	2WD				AWD	
Engine	QR25DE		VQ35DE			
Transmission	A/T		CVT			
Brake control	ABS				VDC	
Intelligent Key system		×		×		×
CAN system type	1	2	3	4	5	6
CAN communication signal chart	XX-XX. "TYPE 1/TYPE 2"		XX-XX. "TYPE 3/TYPE 4"		XX-XX. "TYPE 5/TYPE 6"	

× : Applicable

Check the vehicle equipment with the vehicle identification number plate.

Check the vehicle equipment.

The number indicates the CAN system type of the vehicle.

VEHICLE EQUIPMENT IDENTIFICATION INFORMATION
NOTE:
Check CAN system type from the vehicle shape and equipment.

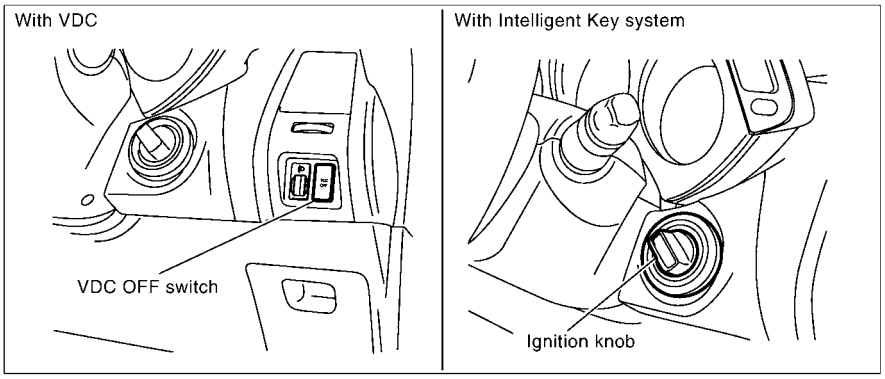

In the above example,
- Checking VDC OFF switch leads to judge whether or not VDC is equipped.
- Checking the ignition knob leads to judge whether or not Intelligent Key system is equipped.

For the above case, CAN system type is "6".

JSMIA0017GB

CAN System Type Specification Chart (Style B)
NOTE:

CAN system type is easily checked with the vehicle equipment identification information shown in the chart.

Example:
Vehicle is equipped as follows: Sedan, 2WD, MR20DE, CVT, ABS, Active AFS, Intelligent Key system, Navigation system and Automatic drive positioner. (◯ shows an example of CAN system type.)

CAN System Specification Chart

Refer to the specification as shown in the chart.

Body type	Sedan			Check the vehicle equipment with the vehicle identification number plate.
Axle	2WD		AWD	
Engine	HR15DE	MR20DE	HR15DE	
Transmission	A/T	CVT	A/T	
Brake control	ABS			Check the vehicle equipment.
Specification chart	XX.XX. SPECIFICATION CHART A	YY.YY. SPECIFICATION CHART B	XX.XX. SPECIFICATION CHART C	Select the applicable vehicle equipment. Refer to the specification chart.

×: Applicable

SPECIFICATION CHART B

Determine CAN system type from the following specification chart.

Body type	Sedan											
Axle	2WD											
Engine	MR20DE											
Transmission	CVT											
Brake control	ABS											
Active AFS		×			×	×			×	×		×
Intelligent Key system			×		×		×	×	×	×	×	×
Navigation system				×		×	×		×		×	×
Automatic drive positioner								×		×	×	×
CAN system type	9	10	11	12	13	14	15	16	17	18	19	20
CAN communication signal chart	XX.XX. TYPE WIRES HELVER INTVER INTVER TYPE WIRES HELVER INTVER TYPE HELVER INTVER TYPE W.											

Check the vehicle equipment.

The number indicates the CAN system type of the vehicle.

×: Applicable

VEHICLE EQUIPMENT IDENTIFICATION INFORMATION

NOTE:

Check CAN system type from the vehicle shape and equipment.

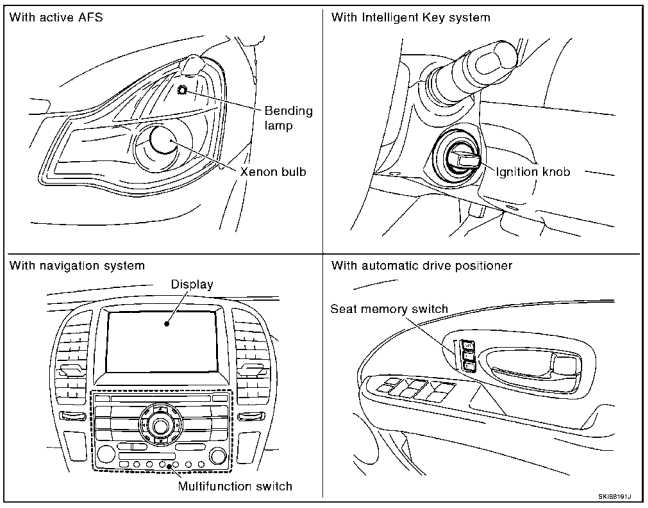

In the above example,
- Checking Xenon bulb and bending lamp lead to judge whether or not Active AFS is equipped.
- Checking the ignition knob leads to judge whether or not Intelligent Key system is equipped.
- Checking display and multifunction switch lead to judge whether or not Navigation system is equipped.
- Checking seat memory switch leads to judge whether or not Automatic drive positioner is equipped.

For the above case, CAN system type is "20".

JSMIA0018GB

CREATE INTERVIEW SHEET

Fill out the symptom described by the customer, vehicle condition, and CAN system type on the interview sheet.

Interview Sheet (Example)

CAN Communication System Diagnosis Interview Sheet

Date received: 3, Feb. 2006

Type: DBA-KG11 VIN No.: KG11-005040

Model: BDRARGZ397EDA-E-J-

First registration: 10, Jan. 2001 Mileage: 62,140

CAN system type: Type 19

Symptom (Results from interview with customer)

- Headlamps suddenly turn ON while driving the vehicle.
- The engine does not restart after stopping the vehicle and turning the ignition switch OFF.
- The cooling fan continues rotating while turning the ignition switch ON.

Condition at inspection

Error Symptom: (Present) / Past

The engine does not start.
While turning the ignition switch ON,
- The headlamps (Lo) turn ON, and the cooling fan continues rotating.
- The interior lamp does not turn ON.

JSMIA0019GB

DETECT THE ROOT CAUSE

CAN diagnosis function of CONSULT-III detects the root cause.

HOW TO USE THIS MANUAL

HOW TO USE THIS SECTION

Caution

INFOID:0000000001711213

- This section describes information peculiar to a vehicle and inspection procedures.
- For trouble diagnosis procedure, refer to LAN-15, "Trouble Diagnosis Procedure".

Abbreviation List

INFOID:0000000001711214

Unit name abbreviations in CONSULT-III CAN diagnosis and in this section are as per the following list.

Abbreviation	Unit name
A-BAG	Air bag diagnosis sensor unit
ABS	ABS actuator and electric unit (control unit)
BCM	BCM
DLC	Data link connector
ECM	ECM
EPS	EPS control unit
I-KEY	Intelligent Key unit
IPDM-E	IPDM E/R
M&A	Combination meter
TCM	TCM

PRECAUTION

PRECAUTIONS

Precaution for Supplemental Restraint System (SRS) "AIR BAG" and "SEAT BELT PRE-TENSIONER"

INFOID:0000000001711215

The Supplemental Restraint System such as “AIR BAG” and “SEAT BELT PRE-TENSIONER”, used along with a front seat belt, helps to reduce the risk or severity of injury to the driver and front passenger for certain types of collision. Information necessary to service the system safely is included in the “SRS AIRBAG” and “SEAT BELT” of this Service Manual.

WARNING:

- **To avoid rendering the SRS inoperative, which could increase the risk of personal injury or death in the event of a collision which would result in air bag inflation, all maintenance must be performed by an authorized NISSAN/INFINITI dealer.**
- **Improper maintenance, including incorrect removal and installation of the SRS, can lead to personal injury caused by unintentional activation of the system. For removal of Spiral Cable and Air Bag Module, see the “SRS AIRBAG”.**
- **Do not use electrical test equipment on any circuit related to the SRS unless instructed to in this Service Manual. SRS wiring harnesses can be identified by yellow and/or orange harnesses or harness connectors.**

Precautions for Trouble Diagnosis

INFOID:0000000001711216

CAUTION:

- **Never apply 7.0 V or more to the measurement terminal.**
- **Use a tester with open terminal voltage of 7.0 V or less.**
- **Turn the ignition switch OFF and disconnect the battery cable from the negative terminal when checking the harness.**

Precautions for Harness Repair

INFOID:0000000001711217

- Solder the repaired area and wrap tape around the soldered area.
  NOTE:
  A fray of twisted lines must be within 110 mm (4.33 in).

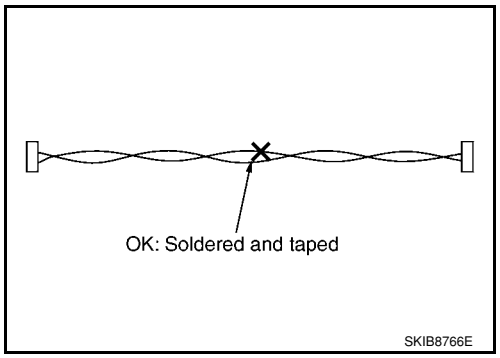

- Bypass connection is never allowed at the repaired area.
  NOTE:
  Bypass connection may cause CAN communication error. The spliced wire becomes separated and the characteristics of twisted line are lost.

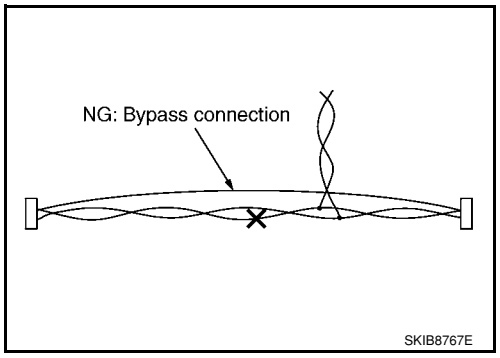

- Replace the applicable harness as an assembly if error is detected on the shield lines of CAN communication line.

BASIC INSPECTION

DIAGNOSIS AND REPAIR WORKFLOW

Interview Sheet

INFOID:0000000001711218

CAN Communication System Diagnosis Interview Sheet

Date received:

Type: VIN No.:

Model:

First registration: Mileage:

CAN system type:

Symptom (Results from interview with customer)

Condition at inspection

Error symptom : Present / Past

SKIB8898E

FUNCTION DIAGNOSIS

CAN COMMUNICATION SYSTEM

CAN System Specification Chart

INFOID:0000000001711219

NOTE:
Refer to LAN-15, "Trouble Diagnosis Procedure" for how to use CAN system specification chart.

Body type	Hatchback/Sedan									
Axle	2WD									
Engine	MR18DE									
Transmission	M/T				A/T		CVT			
Brake control	—		ABS		—	ABS	—		ABS	
Intelligent Key system		×		×				×		×
CAN system type	1	2	3	4	5	6	7	8	9	10
Start CAN Diagnosis (CONSULT-III)	1	2	3	4	5	6	7	8	9	10

×: Applicable

VEHICLE EQUIPMENT IDENTIFICATION INFORMATION

NOTE:
Check CAN system type from the vehicle shape and equipment.

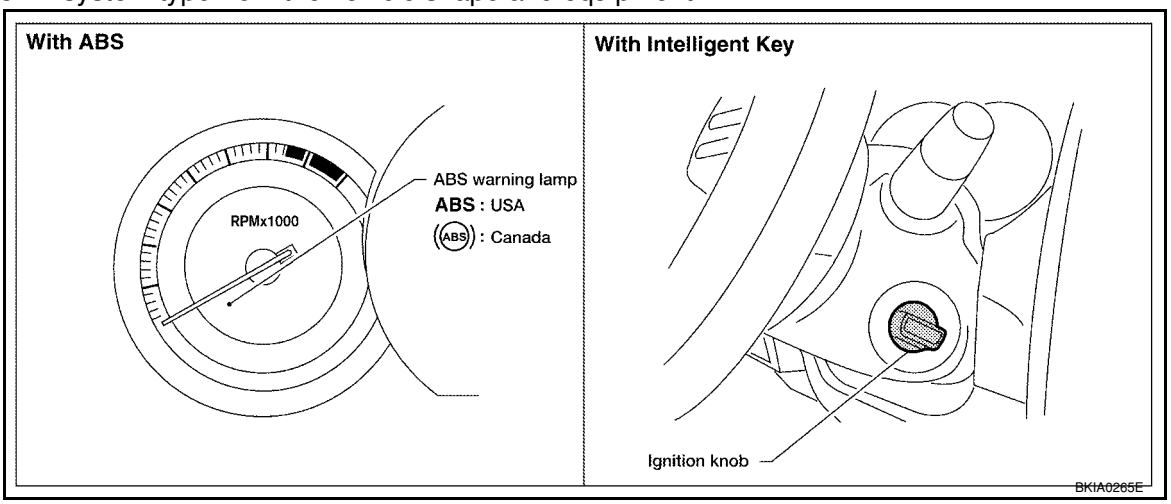

CAN Communication Signal Chart

INFOID:0000000001711220

Refer to LAN-14, "How to Use CAN Communication Signal Chart" for how to use CAN communication signal chart.

NOTE:
Refer to LAN-20, "Abbreviation List" for the abbreviations of the connecting units.

T: Transmit R: Receive

Signal name/Connecting unit	ECM	BCM	EPS	I-KEY	M&A	ABS	TCM*1	TCM*2	IPDM-E
A/C compressor request signal	T								R
Accelerator pedal position signal	T						R	R	
ASCD CRUISE lamp signal	T				R				
ASCD SET lamp signal	T				R				
Closed throttle position signal	T						R	R	
Cooling fan motor operation signal	T								R

Signal name/Connecting unit	ECM	BCM	EPS	I-KEY	M&A	ABS	TCM*1	TCM*2	IPDM-E
Engine coolant temperature signal	T				R				
Engine speed signal	T				R			R	
Engine status signal	T		R						
Fuel consumption monitor signal	T				R				
Malfunction indicator lamp signal	T				R				
Wide open throttle position signal	T						R	R	
A/C switch signal	R	T							
Blower fan motor switch signal	R	T							
Buzzer output signal		T			R				
				T	R				
Day time running light request signal*3		T			R				R
Door lock/unlock status signal		T		R					
Door switch signal		T		R	R				R
Front wiper request signal		T							R
High beam request signal		T			R				R
Horn chirp signal		T							R
Ignition switch signal		T							R
Low beam request signal		T							R
Position lights request signal		T			R				R
Rear window defogger switch signal		T							R
Sleep/wake up signal		R			T				
		T		R	R				R
Theft warning horn request signal		T							R
Tire pressure signal*4		T			R				
Trunk open/close status signal		T		R					
Turn indicator signal		T			R				
EPS operation signal	R		T						
EPS warning lamp signal			T		R				
Door lock/unlock/trunk open request signal		R		T					
Hazard request signal		R		T					
Ignition knob switch signal		R		T					
KEY warning lamp signal				T	R				
LOCK warning lamp signal				T	R				
Panic alarm request signal		R		T					
Fuel level sensor signal	R				T				
Overdrive control switch signal					T		R	R	
P/N range signal					T		R		
Stop lamp switch signal					T		R	R	
Vehicle speed signal	R	R	R		T				
	R		R		R	T		R	
			R*5		R*5			T*5	
ABS warning lamp signal					R	T			

Signal name/Connecting unit	ECM	BCM	EPS	I-KEY	M&A	ABS	TCM*1	TCM*2	IPDM-E
Brake warning lamp signal					R	T			
A/T check indicator signal					R		T		
A/T self-diagnosis signal	R						T		
OD OFF indicator signal					R		T		
Output shaft revolution signal	R						T	T	
Shift position indicator signal					R		T	T	
Turbine revolution signal	R						T		
CVT self-diagnosis signal	R							T	
Input shaft revolution signal	R							T	
OD OFF indicator signal					R			T	
Front wiper stop position signal		R							T
High beam status signal	R								T
Low beam status signal	R								T
Oil pressure switch signal					R				T
Rear window defogger control signal	R								T

*1: A/T models
*2: CVT models
*3: Models for Canada
*4: Models for USA
*5: Models without ABS

NOTE:
CAN data of the air bag diagnosis sensor unit is not used by usual service work, thus it is omitted.

COMPONENT DIAGNOSIS

CAN COMMUNICATION SYSTEM

Component Parts Location

INFOID:0000000001711221

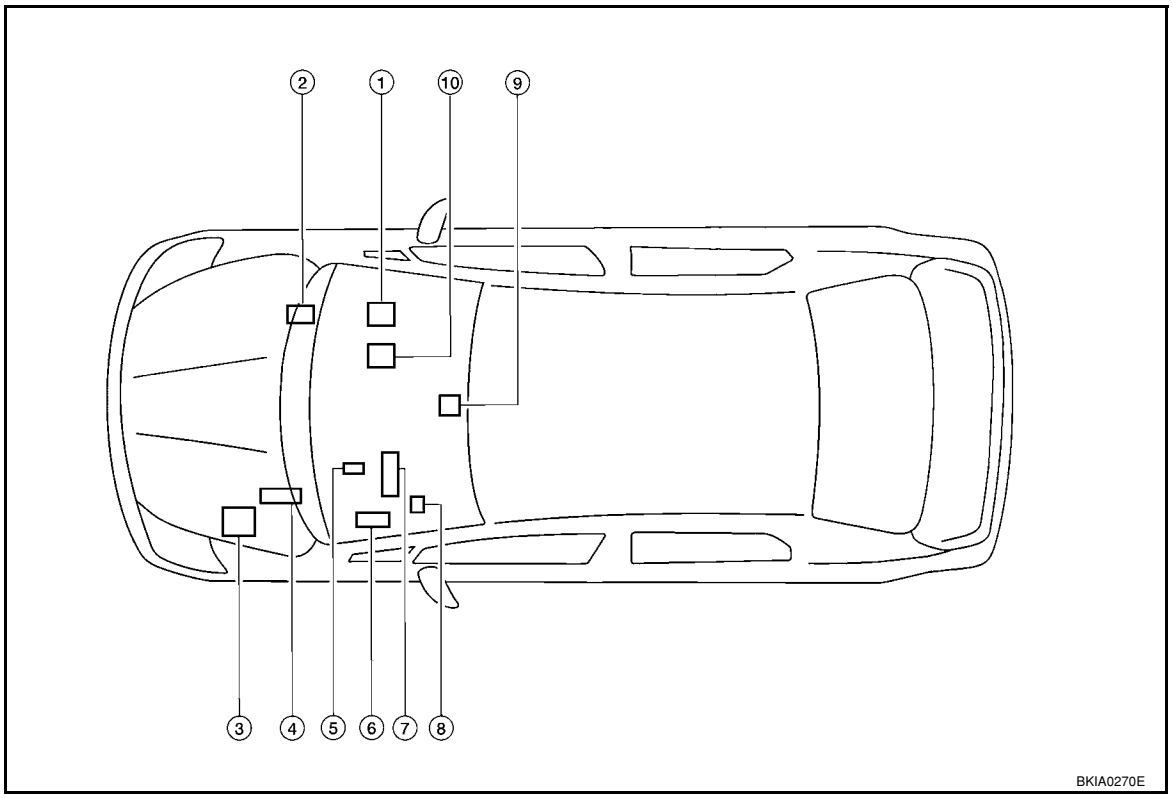

1. BCM M18
2. ABS actuator and electric unit (control unit) E33
3. IPDM E/R E46
4. ECM E16
5. EPS control unit M53
6. TCM E31
7. Combination meter M24
8. Data link connector M22
9. Air bag diagnosis sensor unit M35
10. Intelligent Key unit M52

Schematic

INFOID:0000000001724328

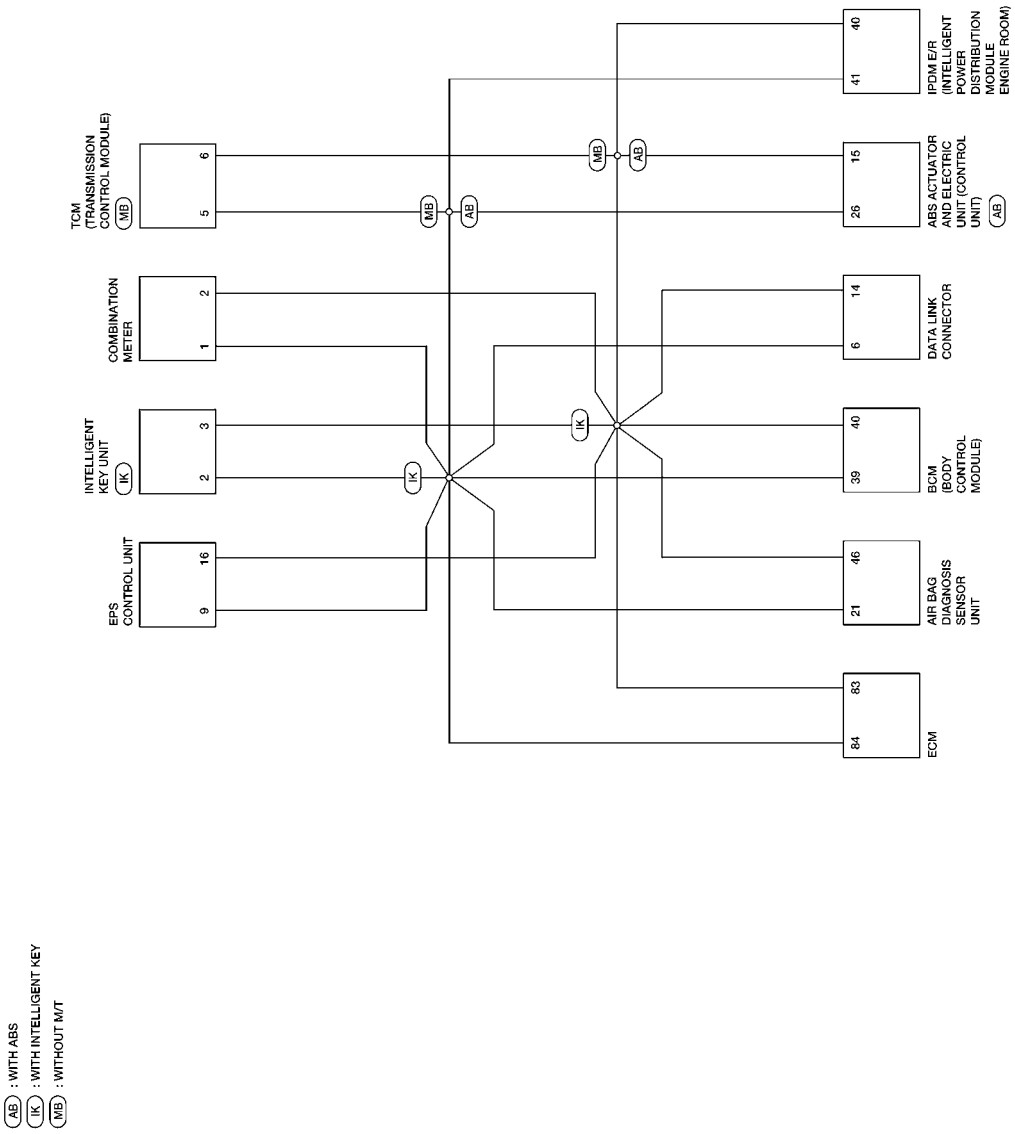

BKWA0819E

Wiring Diagram - CAN -

INFOID:0000000001711222

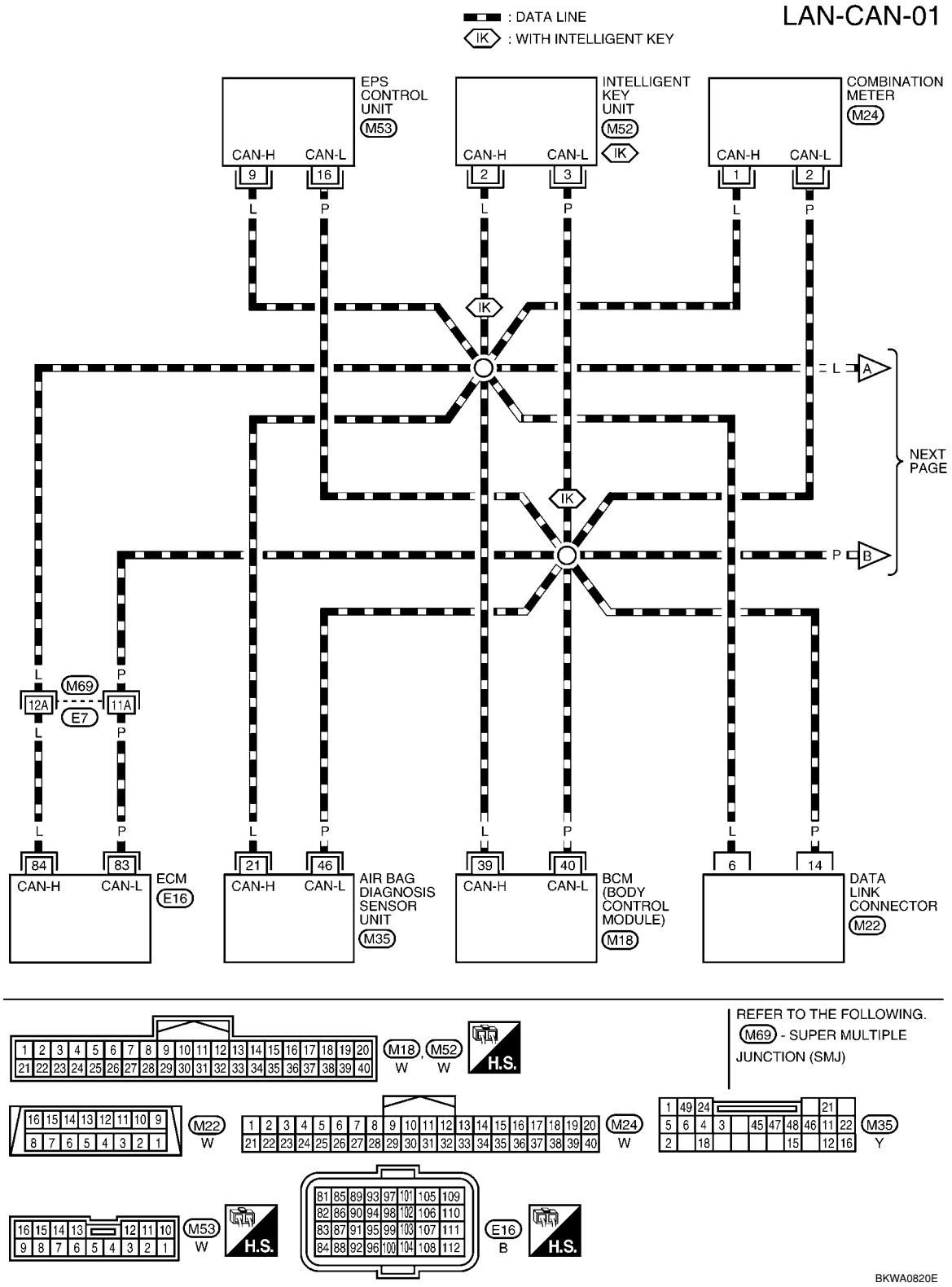

LAN-CAN-02

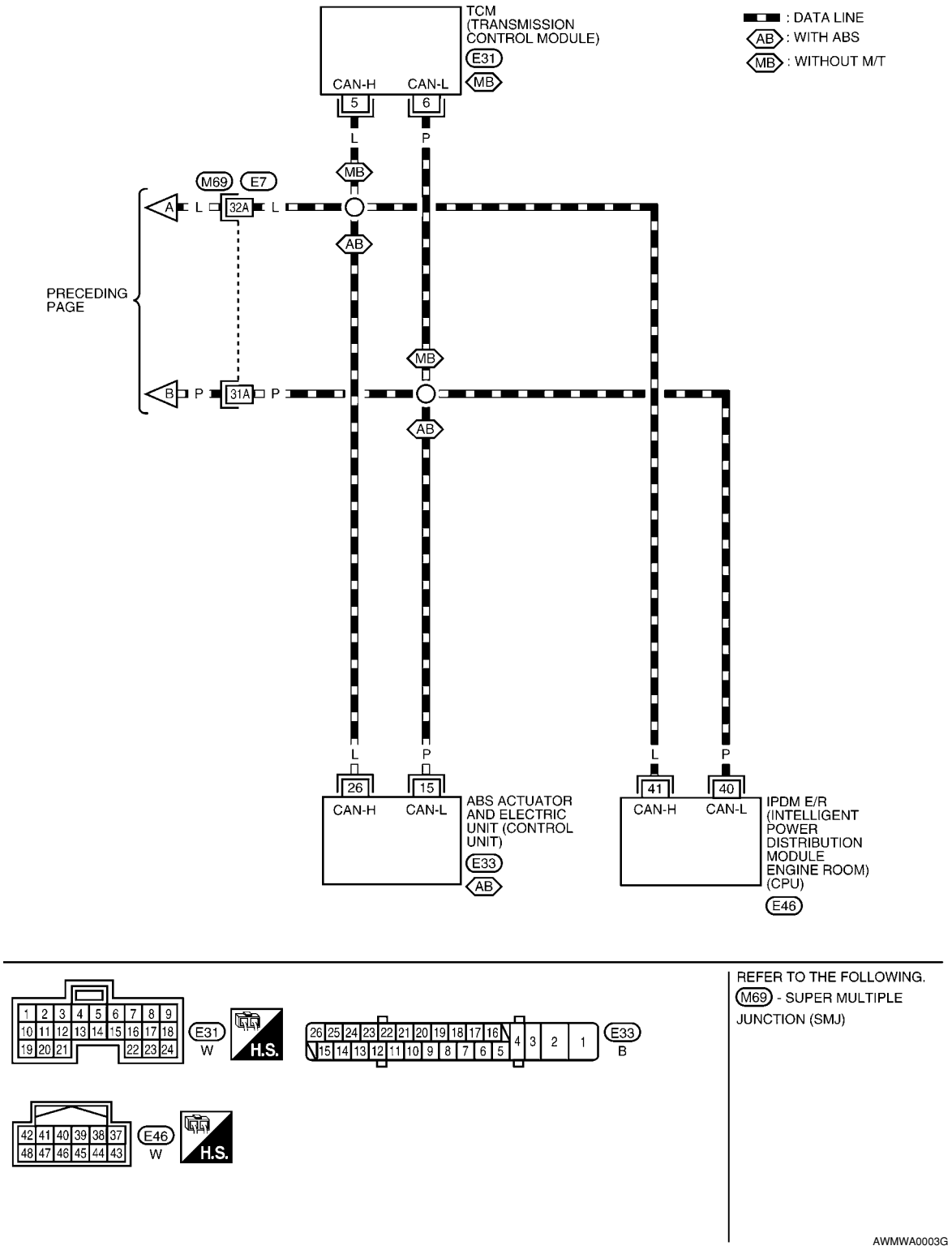
TCM (TRANSMISSION CONTROL MODULE)
E31
MB
CAN-H
CAN-L
5
6
L
P
: DATA LINE
AB : WITH ABS
MB : WITHOUT M/T
M69
E7
A
32A
B
31A
PRECEDING PAGE
26
15
41
40
ABS ACTUATOR AND ELECTRIC UNIT (CONTROL UNIT)
E33
IPDM E/R (INTELLIGENT POWER DISTRIBUTION MODULE ENGINE ROOM) (CPU)
E46
E31
W
H.S.
E33
B
E46
W
REFER TO THE FOLLOWING.
M69 - SUPER MULTIPLE JUNCTION (SMJ)
AWMWA0003G

MALFUNCTION AREA CHART

Main Line

INFOID:0000000001711223

Malfunction Area	Reference
Main line between data link connector and ABS actuator and electric unit (control unit)	LAN-31, "Diagnosis Procedure"
Main line between data link connector and TCM	LAN-32, "Diagnosis Procedure"

Branch Line

INFOID:0000000001711224

Malfunction Area	Reference
ECM branch line circuit	LAN-33, "Diagnosis Procedure"
BCM branch line circuit	LAN-34, "Diagnosis Procedure"
Data link connector branch line circuit	LAN-35, "Diagnosis Procedure"
EPS control unit branch line circuit	LAN-36, "Diagnosis Procedure"
Intelligent Key unit branch line circuit	LAN-37, "Diagnosis Procedure"
Combination meter branch line circuit	LAN-38, "Diagnosis Procedure"
ABS actuator and electric unit (control unit) branch line circuit	LAN-39, "Diagnosis Procedure"
TCM branch line circuit	LAN-40, "Diagnosis Procedure"
IPDM E/R branch line circuit	LAN-41, "Diagnosis Procedure"

Short Circuit

INFOID:0000000001711225

Malfunction Area	Reference
CAN communication circuit	LAN-42, "Diagnosis Procedure"

MAIN LINE BETWEEN DLC AND ABS CIRCUIT

Diagnosis Procedure

INFOID:0000000001711226

INSPECTION PROCEDURE

1. CHECK CONNECTOR

1. Turn the ignition switch OFF.
2. Disconnect the battery cable from the negative terminal.
3. Check the following terminals and connectors for damage, bend and loose connection (connector side and harness side).

- Harness connector M69
- Harness connector E7

Is the inspection result normal?

YES >> GO TO 2.
NO >> Repair the terminal and connector.

2. CHECK HARNESS CONTINUITY (OPEN CIRCUIT)

1. Disconnect the harness connectors M69 and E7.
2. Check the continuity between the data link connector and the harness connector.

Data link connector		Harness connector		Continuity
Connector No.	Terminal No.	Connector No.	Terminal No.	
M22	6	M69	32A	Existed
	14		31A	Existed

Is the inspection result normal?

YES >> GO TO 3.
NO >> Repair the main line between the data link connector and the harness connector M69.

3. CHECK HARNESS CONTINUITY (OPEN CIRCUIT)

1. Disconnect the connector of ABS actuator and electric unit (control unit).
2. Check the continuity between the harness connector and the ABS actuator and electric unit (control unit) harness connector.

Harness connector		ABS actuator and electric unit (control unit) harness connector		Continuity
Connector No.	Terminal No.	Connector No.	Terminal No.	
E7	32A	E33	26	Existed
	31A		15	Existed

Is the inspection result normal?

YES (Present error)>>Check CAN system type decision again.
YES (Past error)>>Error was detected in the main line between the data link connector and the ABS actuator and electric unit (control unit).
NO >> Repair the main line between the harness connector E7 and the ABS actuator and electric unit (control unit).

MAIN LINE BETWEEN DLC AND TCM CIRCUIT

Diagnosis Procedure

INFOID:0000000001711227

INSPECTION PROCEDURE

1.CHECK CONNECTOR

1. Turn the ignition switch OFF.
2. Disconnect the battery cable from the negative terminal.
3. Check the following terminals and connectors for damage, bend and loose connection (connector side and harness side).

- Harness connector M69
- Harness connector E7

Is the inspection result normal?

YES >> GO TO 2.
NO >> Repair the terminal and connector.

2.CHECK HARNESS CONTINUITY (OPEN CIRCUIT)

1. Disconnect the harness connectors M69 and E7.
2. Check the continuity between the data link connector and the harness connector.

Data link connector		Harness connector		Continuity
Connector No.	Terminal No.	Connector No.	Terminal No.	
M22	6	M69	32A	Existed
	14		31A	Existed

Is the inspection result normal?

YES >> GO TO 3.
NO >> Repair the main line between the data link connector and the harness connector M69.

3.CHECK HARNESS CONTINUITY (OPEN CIRCUIT)

1. Disconnect the connector of TCM.
2. Check the continuity between the harness connector and the TCM.

Harness connector		TCM harness connector		Continuity
Connector No.	Terminal No.	Connector No.	Terminal No.	
E7	32A	E31	5	Existed
	31A		6	Existed

Is the inspection result normal?

YES (Present error)>>Check CAN system type decision again.
YES (Past error)>>Error was detected in the main line between the data link connector and the TCM.
NO >> Repair the main line between the harness connector E7 and the TCM.

ECM BRANCH LINE CIRCUIT

Diagnosis Procedure

INFOID:0000000001711229

1. CHECK CONNECTOR

1. Turn the ignition switch OFF.
2. Disconnect the battery cable from the negative terminal.
3. Check the following terminals and connectors for damage, bend and loose connection (unit side and connector side).

- ECM
- Harness connector E7
- Harness connector M69

Is the inspection result normal?

YES >> GO TO 2.
NO >> Repair the terminal and connector.

2. CHECK HARNESS FOR OPEN CIRCUIT

1. Disconnect the connector of ECM.
2. Check the resistance between the ECM harness connector terminals.

ECM harness connector			Resistance (Ω)
Connector No.	Terminal No.		
E16	84	83	Approx. 108 – 132

Is the measurement value within the specification?

YES >> GO TO 3.
NO >> Repair the ECM branch line.

3. CHECK POWER SUPPLY AND GROUND CIRCUIT

Check the power supply and the ground circuit of the ECM. Refer to EC-138, "Diagnosis Procedure".

Is the inspection result normal?

YES (Present error)>>Replace the ECM. Refer to EC-75, "Procedure After Replacing ECM".
YES (Past error)>>Error was detected in the ECM branch line.
NO >> Repair the power supply and the ground circuit.

BCM BRANCH LINE CIRCUIT

Diagnosis Procedure

INFOID:0000000001711230

1.CHECK CONNECTOR

1. Turn the ignition switch OFF.
2. Disconnect the battery cable from the negative terminal.
3. Check the terminals and connectors of the BCM for damage, bend and loose connection (unit side and connector side).

Is the inspection result normal?

YES >> GO TO 2.
NO >> Repair the terminal and connector.

2.CHECK HARNESS FOR OPEN CIRCUIT

1. Disconnect the connector of BCM.
2. Check the resistance between the BCM harness connector terminals.

BCM harness connector			Resistance (Ω)
Connector No.	Terminal No.		
M18	39	40	Approx. 54 – 66

Is the measurement value within the specification?

YES >> GO TO 3.
NO >> Repair the BCM branch line.

3.CHECK POWER SUPPLY AND GROUND CIRCUIT

Check the power supply and the ground circuit of the BCM. Refer to BCS-15, "BCM Power Supply and Ground Circuit Inspection".

Is the inspection result normal?

YES (Present error)>>Replace the BCM. Refer to BCS-18, "Removal and Installation of BCM".
YES (Past error)>>Error was detected in the BCM branch line.
NO >> Repair the power supply and the ground circuit.

DLC BRANCH LINE CIRCUIT

Diagnosis Procedure

INFOID:0000000001711231

INSPECTION PROCEDURE

1. CHECK CONNECTOR

1. Turn the ignition switch OFF.
2. Disconnect the battery cable from the negative terminal.
3. Check the terminals and connectors of the data link connector for damage, bend and loose connection (connector side and harness side).

Is the inspection result normal?

YES >> GO TO 2.
NO >> Repair the terminal and connector.

2. CHECK HARNESS FOR OPEN CIRCUIT

Check the resistance between the data link connector terminals.

Data link connector			Resistance (Ω)
Connector No.	Terminal No.		
M22	6	14	Approx. 54 – 66

Is the measurement value within the specification?

YES (Present error)>>Check the CAN system type decision again.
YES (Past error)>>Error was detected in the data link connector branch line circuit.
NO >> Repair the data link connector branch line.

EPS BRANCH LINE CIRCUIT

Diagnosis Procedure

INFOID:0000000001711232

INSPECTION PROCEDURE

1.CHECK CONNECTOR

1. Turn the ignition switch OFF.
2. Disconnect the battery cable from the negative terminal.
3. Check the terminals and connectors of the EPS control unit for damage, bend and loose connection (unit side and connector side).

Is the inspection result normal?

YES >> GO TO 2.
NO >> Repair the terminal and connector.

2.CHECK HARNESS FOR OPEN CIRCUIT

1. Disconnect the connector of EPS control unit.
2. Check the resistance between the EPS control unit harness connector terminals.

EPS control unit harness connector			Resistance (Ω)
Connector No.	Terminal No.		
M53	9	16	Approx. 54 – 66

Is the measurement value within the specification?

YES >> GO TO 3.
NO >> Repair the EPS control unit branch line.

3.CHECK POWER SUPPLY AND GROUND CIRCUIT

Check the power supply and the ground circuit of the EPS control unit. Refer to STC-14, "DTC C1601 BATTERY VOLT".

Is the inspection result normal?

YES (Present error)>>Replace the EPS control unit. Refer to PS-9, "Removal and Installation".
YES (Past error)>>Error was detected in the EPS control unit branch line.
NO >> Repair the power supply and the ground circuit.

I-KEY BRANCH LINE CIRCUIT

Diagnosis Procedure

INFOID:0000000001711233

INSPECTION PROCEDURE

1. CHECK CONNECTOR

1. Turn the ignition switch OFF.
2. Disconnect the battery cable from the negative terminal.
3. Check the terminals and connectors of the Intelligent Key unit for damage, bend and loose connection (unit side and connector side).

Is the inspection result normal?

YES >> GO TO 2.
NO >> Repair the terminal and connector.

2. CHECK HARNESS FOR OPEN CIRCUIT

1. Disconnect the connector of Intelligent Key unit.
2. Check the resistance between the Intelligent Key unit harness connector terminals.

Intelligent Key unit harness connector			Resistance (Ω)
Connector No.	Terminal No.		
M52	2	3	Approx. 54 – 66

Is the measurement value within the specification?

YES >> GO TO 3.
NO >> Repair the Intelligent Key unit branch line.

3. CHECK POWER SUPPLY AND GROUND CIRCUIT

Check the power supply and the ground circuit of the Intelligent Key unit. Refer to BL-110, "Power Supply and Ground Circuit Inspection".

Is the inspection result normal?

YES (Present error)>>Replace the Intelligent Key unit. Refer to BL-142, "Removal and Installation of Intelligent Key Unit".
YES (Past error)>>Error was detected in the Intelligent Key unit branch line.
NO >> Repair the power supply and the ground circuit.

M&A BRANCH LINE CIRCUIT

Diagnosis Procedure

INFOID:0000000001711234

INSPECTION PROCEDURE

1.CHECK CONNECTOR

1. Turn the ignition switch OFF.
2. Disconnect the battery cable from the negative terminal.
3. Check the terminals and connectors of the combination meter for damage, bend and loose connection (unit side and connector side).

Is the inspection result normal?

YES >> GO TO 2.
NO >> Repair the terminal and connector.

2.CHECK HARNESS FOR OPEN CIRCUIT

1. Disconnect the connector of combination meter.
2. Check the resistance between the combination meter harness connector terminals.

Combination meter harness connector			Resistance (Ω)
Connector No.	Terminal No.		
M24	1	2	Approx. 54 – 66

Is the measurement value within the specification?

YES >> GO TO 3.
NO >> Repair the combination meter branch line.

3.CHECK POWER SUPPLY AND GROUND CIRCUIT

Check the power supply and the ground circuit of the combination meter. Refer to DI-15, "Power Supply and Ground Circuit Inspection".

Is the inspection result normal?

YES (Present error)>>Replace the combination meter. Refer to DI-20, "Removal and Installation".
YES (Past error)>>Error was detected in the combination meter branch line.
NO >> Repair the power supply and the ground circuit.

ABS BRANCH LINE CIRCUIT

Diagnosis Procedure

INFOID:0000000001711237

1. CHECK CONNECTOR

1. Turn the ignition switch OFF.
2. Disconnect the battery cable from the negative terminal.
3. Check the terminals and connectors of the ABS actuator and electric unit (control unit) for damage, bend and loose connection (unit side and connector side).

Is the inspection result normal?

YES >> GO TO 2.
NO >> Repair the terminal and connector.

2. CHECK HARNESS FOR OPEN CIRCUIT

1. Disconnect the connector of ABS actuator and electric unit (control unit).
2. Check the resistance between the ABS actuator and electric unit (control unit) harness connector terminals.

ABS actuator and electric unit (control unit) harness connector			Resistance (Ω)
Connector No.	Terminal No.		
E33	26	15	Approx. 54 – 66

Is the measurement value within the specification?

YES >> GO TO 3.
NO >> Repair the ABS actuator and electric unit (control unit) branch line.

3. CHECK POWER SUPPLY AND GROUND CIRCUIT

Check the power supply and the ground circuit of the ABS actuator and electric unit (control unit). Refer to BRC-27, "ABS Control Unit Power and Ground Systems Inspection".

Is the inspection result normal?

YES (Present error)>>Replace the ABS actuator and electric unit (control unit). Refer to BRC-35, "Removal and Installation".
YES (Past error)>>Error was detected in the ABS actuator and electric unit (control unit) branch line.
NO >> Repair the power supply and the ground circuit.

TCM BRANCH LINE CIRCUIT

Diagnosis Procedure

INFOID:0000000001711238

1.CHECK CONNECTOR

1. Turn the ignition switch OFF.
2. Disconnect the battery cable from the negative terminal.
3. Check the terminals and connector of the TCM for damage, bend and loose connection (unit side and connector side).

Is the inspection result normal?

YES >> GO TO 2.
NO >> Repair the terminal and connector.

2.CHECK HARNESS FOR OPEN CIRCUIT

1. Disconnect the connector of TCM.
2. Check the resistance between the TCM harness connector terminals.

TCM harness connector			Resistance (Ω)
Connector No.	Terminal No.		
E31	5	6	Approx. 54 – 66

Is the measurement value within the specification?

YES >> GO TO 3.
NO >> Repair the TCM branch line.

3.CHECK POWER SUPPLY AND GROUND CIRCUIT

Check the power supply and the ground circuit of the TCM. Refer to the following.
- A/T models: AT-165, "Diagnosis Procedure"
- CVT models: CVT-123, "Diagnosis Procedure"

Is the inspection result normal?

YES (Present error)>>Replace the TCM. Refer to the following.
- A/T models: AT-202, "Removal and Installation"
- CVT models: CVT-161, "Removal and Installation"

YES (Past error)>>Error was detected in the TCM branch line.
NO >> Repair the power supply and the ground circuit.

IPDM-E BRANCH LINE CIRCUIT

Diagnosis Procedure

INFOID:0000000001711239

INSPECTION PROCEDURE

1. CHECK CONNECTOR

1. Turn the ignition switch OFF.
2. Disconnect the battery cable from the negative terminal.
3. Check the following terminals and connectors for damage, bend and loose connection (unit side and connector side).

- IPDM E/R
- Harness connector E7 (Models without ABS)
- Harness connector M69 (Models without ABS)

Is the inspection result normal?

YES >> GO TO 2.
NO >> Repair the terminal and connector.

2. CHECK HARNESS FOR OPEN CIRCUIT

1. Disconnect the connector of IPDM E/R.
2. Check the resistance between the IPDM E/R harness connector terminals.

IPDM E/R harness connector			Resistance (Ω)
Connector No.	Terminal No.		
E46	41	40	Approx. 108 – 132

Is the measurement value within the specification?

YES >> GO TO 3.
NO >> Repair the IPDM E/R branch line.

3. CHECK POWER SUPPLY AND GROUND CIRCUIT

Check the power supply and the ground circuit of the IPDM E/R. Refer to PG-25, "IPDM E/R Power/Ground Circuit Inspection".

Is the inspection result normal?

YES (Present error)>>Replace the IPDM E/R. Refer to PG-26, "Removal and Installation of IPDM E/R".
YES (Past error)>>Error was detected in the IPDM E/R branch line.
NO >> Repair the power supply and the ground circuit.

CAN COMMUNICATION CIRCUIT

Diagnosis Procedure

INFOID:0000000001711240

INSPECTION PROCEDURE

1. CONNECTOR INSPECTION

1. Turn the ignition switch OFF.
2. Disconnect the battery cable from the negative terminal.
3. Disconnect all the unit connectors on CAN communication system.
4. Check terminals and connectors for damage, bend and loose connection.

Is the inspection result normal?

YES >> GO TO 2.
NO >> Repair the terminal and connector.

2. CHECK HARNESS CONTINUITY (SHORT CIRCUIT)

Check the continuity between the data link connector terminals.

Data link connector			Continuity
Connector No.	Terminal No.		
M22	6	14	Not existed

Is the inspection result normal?

YES >> GO TO 3.
NO >> Check the harness and repair the root cause.

3. CHECK HARNESS CONTINUITY (SHORT CIRCUIT)

Check the continuity between the data link connector and the ground.

Data link connector		Ground	Continuity
Connector No.	Terminal No.		
M22	6		Not existed
	14		Not existed

Is the inspection result normal?

YES >> GO TO 4.
NO >> Check the harness and repair the root cause.

4. CHECK ECM AND IPDM E/R TERMINATION CIRCUIT

1. Remove the ECM and the IPDM E/R.
2. Check the resistance between the ECM terminals.

ECM		Resistance (Ω)
Terminal No.		
84	83	Approx. 108 – 132

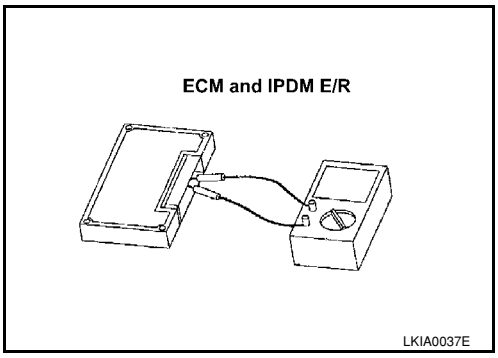

3. Check the resistance between the IPDM E/R terminals.

IPDM E/R		Resistance (Ω)
Terminal No.		
41	40	Approx. 108 – 132

Is the measurement value within the specification?

YES >> GO TO 5.
NO >> Replace the ECM and/or the IPDM E/R.

5. CHECK SYMPTOM

Connect all the connectors. Check if the symptoms described in the “Symptom (Results from interview with customer)” are reproduced.

Inspection result

Reproduced>>GO TO 6.
Non-reproduced>>Start the diagnosis again. Follow the trouble diagnosis procedure when past error is detected.

6. CHECK UNIT REPRODUCTION

Perform the reproduction test as per the following procedure for each unit.

1. Turn the ignition switch OFF.
2. Disconnect the battery cable from the negative terminal.
3. Disconnect one of the unit connectors of CAN communication system.
   NOTE:
   ECM and IPDM E/R have a termination circuit. Check other units first.
4. Connect the battery cable to the negative terminal. Check if the symptoms described in the “Symptom (Results from interview with customer)” are reproduced.
   NOTE:
   Although unit-related error symptoms occur, do not confuse them with other symptoms.

Inspection result

Reproduced>>Connect the connector. Check other units as per the above procedure.
Non-reproduced>>Replace the unit whose connector was disconnected.

COMPONENT DIAGNOSIS

ECM BRANCH LINE CIRCUIT

Diagnosis Procedure

INFOID:0000000001711345

1.CHECK CONNECTOR

1. Turn the ignition switch OFF.
2. Disconnect the battery cable from the negative terminal.
3. Check the following terminals and connectors for damage, bend and loose connection (unit side and connector side).

- ECM
- Harness connector E7
- Harness connector M69

Is the inspection result normal?

YES >> GO TO 2.
NO >> Repair the terminal and connector.

2.CHECK HARNESS FOR OPEN CIRCUIT

1. Disconnect the connector of ECM.
2. Check the resistance between the ECM harness connector terminals.

ECM harness connector			Resistance (Ω)
Connector No.	Terminal No.		
E16	84	83	Approx. 108 – 132

Is the measurement value within the specification?

YES >> GO TO 3.
NO >> Repair the ECM branch line.

3.CHECK POWER SUPPLY AND GROUND CIRCUIT

Check the power supply and the ground circuit of the ECM. Refer to EC-138, "Diagnosis Procedure".

Is the inspection result normal?

YES (Present error)>>Replace the ECM. Refer to EC-75, "Procedure After Replacing ECM".
YES (Past error)>>Error was detected in the ECM branch line.
NO >> Repair the power supply and the ground circuit.

BCM BRANCH LINE CIRCUIT

Diagnosis Procedure

INFOID:0000000001711346

1. CHECK CONNECTOR

1. Turn the ignition switch OFF.
2. Disconnect the battery cable from the negative terminal.
3. Check the terminals and connectors of the BCM for damage, bend and loose connection (unit side and connector side).

Is the inspection result normal?

YES >> GO TO 2.
NO >> Repair the terminal and connector.

2. CHECK HARNESS FOR OPEN CIRCUIT

1. Disconnect the connector of BCM.
2. Check the resistance between the BCM harness connector terminals.

BCM harness connector			Resistance (Ω)
Connector No.	Terminal No.		
M18	39	40	Approx. 54 – 66

Is the measurement value within the specification?

YES >> GO TO 3.
NO >> Repair the BCM branch line.

3. CHECK POWER SUPPLY AND GROUND CIRCUIT

Check the power supply and the ground circuit of the BCM. Refer to BCS-15, "BCM Power Supply and Ground Circuit Inspection".

Is the inspection result normal?

YES (Present error)>>Replace the BCM. Refer to BCS-18, "Removal and Installation of BCM".
YES (Past error)>>Error was detected in the BCM branch line.
NO >> Repair the power supply and the ground circuit.

DLC BRANCH LINE CIRCUIT

Diagnosis Procedure

INFOID:0000000001711347

INSPECTION PROCEDURE

1.CHECK CONNECTOR

1. Turn the ignition switch OFF.
2. Disconnect the battery cable from the negative terminal.
3. Check the terminals and connectors of the data link connector for damage, bend and loose connection (connector side and harness side).

Is the inspection result normal?

YES >> GO TO 2.
NO >> Repair the terminal and connector.

2.CHECK HARNESS FOR OPEN CIRCUIT

Check the resistance between the data link connector terminals.

Data link connector			Resistance (Ω)
Connector No.	Terminal No.		
M22	6	14	Approx. 54 – 66

Is the measurement value within the specification?

YES (Present error)>>Check the CAN system type decision again.
YES (Past error)>>Error was detected in the data link connector branch line circuit.
NO >> Repair the data link connector branch line.

EPS BRANCH LINE CIRCUIT

Diagnosis Procedure

INFOID:0000000001711348

INSPECTION PROCEDURE

1. CHECK CONNECTOR

1. Turn the ignition switch OFF.
2. Disconnect the battery cable from the negative terminal.
3. Check the terminals and connectors of the EPS control unit for damage, bend and loose connection (unit side and connector side).

Is the inspection result normal?

YES >> GO TO 2.
NO >> Repair the terminal and connector.

2. CHECK HARNESS FOR OPEN CIRCUIT

1. Disconnect the connector of EPS control unit.
2. Check the resistance between the EPS control unit harness connector terminals.

EPS control unit harness connector			Resistance (Ω)
Connector No.	Terminal No.		
M53	9	16	Approx. 54 – 66

Is the measurement value within the specification?

YES >> GO TO 3.
NO >> Repair the EPS control unit branch line.

3. CHECK POWER SUPPLY AND GROUND CIRCUIT

Check the power supply and the ground circuit of the EPS control unit. Refer to STC-14, "DTC C1601 BATTERY VOLT".

Is the inspection result normal?

YES (Present error)>>Replace the EPS control unit. Refer to PS-9, "Removal and Installation".
YES (Past error)>>Error was detected in the EPS control unit branch line.
NO >> Repair the power supply and the ground circuit.

M&A BRANCH LINE CIRCUIT

Diagnosis Procedure

INFOID:0000000001711350

INSPECTION PROCEDURE

1.CHECK CONNECTOR

1. Turn the ignition switch OFF.
2. Disconnect the battery cable from the negative terminal.
3. Check the terminals and connectors of the combination meter for damage, bend and loose connection (unit side and connector side).

Is the inspection result normal?

YES >> GO TO 2.
NO >> Repair the terminal and connector.

2.CHECK HARNESS FOR OPEN CIRCUIT

1. Disconnect the connector of combination meter.
2. Check the resistance between the combination meter harness connector terminals.

Combination meter harness connector			Resistance (Ω)
Connector No.	Terminal No.		
M24	1	2	Approx. 54 – 66

Is the measurement value within the specification?

YES >> GO TO 3.
NO >> Repair the combination meter branch line.

3.CHECK POWER SUPPLY AND GROUND CIRCUIT

Check the power supply and the ground circuit of the combination meter. Refer to DI-15, "Power Supply and Ground Circuit Inspection".

Is the inspection result normal?

YES (Present error)>>Replace the combination meter. Refer to DI-20, "Removal and Installation".
YES (Past error)>>Error was detected in the combination meter branch line.
NO >> Repair the power supply and the ground circuit.

IPDM-E BRANCH LINE CIRCUIT

Diagnosis Procedure

INFOID:0000000001711355

INSPECTION PROCEDURE

1.CHECK CONNECTOR

1. Turn the ignition switch OFF.
2. Disconnect the battery cable from the negative terminal.
3. Check the following terminals and connectors for damage, bend and loose connection (unit side and connector side).

- IPDM E/R
- Harness connector E7 (Models without ABS)
- Harness connector M69 (Models without ABS)

Is the inspection result normal?

YES >> GO TO 2.
NO >> Repair the terminal and connector.

2.CHECK HARNESS FOR OPEN CIRCUIT

1. Disconnect the connector of IPDM E/R.
2. Check the resistance between the IPDM E/R harness connector terminals.

IPDM E/R harness connector			Resistance (Ω)
Connector No.	Terminal No.		
E46	41	40	Approx. 108 – 132

Is the measurement value within the specification?

YES >> GO TO 3.
NO >> Repair the IPDM E/R branch line.

3.CHECK POWER SUPPLY AND GROUND CIRCUIT

Check the power supply and the ground circuit of the IPDM E/R. Refer to PG-25, "IPDM E/R Power/Ground Circuit Inspection".

Is the inspection result normal?

YES (Present error)>>Replace the IPDM E/R. Refer to PG-26, "Removal and Installation of IPDM E/R".
YES (Past error)>>Error was detected in the IPDM E/R branch line.
NO >> Repair the power supply and the ground circuit.

CAN COMMUNICATION CIRCUIT

Diagnosis Procedure

INFOID:0000000001711356

INSPECTION PROCEDURE

1. CONNECTOR INSPECTION

1. Turn the ignition switch OFF.
2. Disconnect the battery cable from the negative terminal.
3. Disconnect all the unit connectors on CAN communication system.
4. Check terminals and connectors for damage, bend and loose connection.

Is the inspection result normal?

YES >> GO TO 2.
NO >> Repair the terminal and connector.

2. CHECK HARNESS CONTINUITY (SHORT CIRCUIT)

Check the continuity between the data link connector terminals.

Data link connector			Continuity
Connector No.	Terminal No.		
M22	6	14	Not existed

Is the inspection result normal?

YES >> GO TO 3.
NO >> Check the harness and repair the root cause.

3. CHECK HARNESS CONTINUITY (SHORT CIRCUIT)

Check the continuity between the data link connector and the ground.

Data link connector		Ground	Continuity
Connector No.	Terminal No.		
M22	6		Not existed
	14		Not existed

Is the inspection result normal?

YES >> GO TO 4.
NO >> Check the harness and repair the root cause.

4. CHECK ECM AND IPDM E/R TERMINATION CIRCUIT

1. Remove the ECM and the IPDM E/R.
2. Check the resistance between the ECM terminals.

ECM		Resistance (Ω)
Terminal No.		
84	83	Approx. 108 – 132

3. Check the resistance between the IPDM E/R terminals.

IPDM E/R		Resistance (Ω)
Terminal No.		
41	40	Approx. 108 – 132

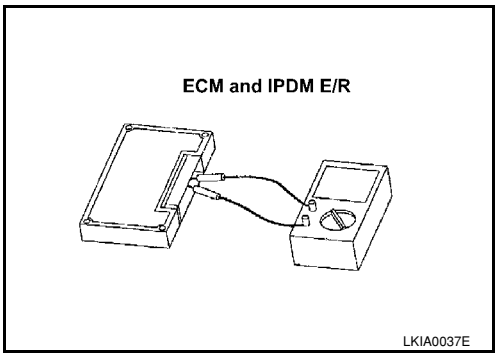

Is the measurement value within the specification?

YES >> GO TO 5.
NO >> Replace the ECM and/or the IPDM E/R.

5. CHECK SYMPTOM

Connect all the connectors. Check if the symptoms described in the “Symptom (Results from interview with customer)” are reproduced.

Inspection result

Reproduced>>GO TO 6.
Non-reproduced>>Start the diagnosis again. Follow the trouble diagnosis procedure when past error is detected.

6. CHECK UNIT REPRODUCTION

Perform the reproduction test as per the following procedure for each unit.

1. Turn the ignition switch OFF.
2. Disconnect the battery cable from the negative terminal.
3. Disconnect one of the unit connectors of CAN communication system.
   NOTE:
   ECM and IPDM E/R have a termination circuit. Check other units first.
4. Connect the battery cable to the negative terminal. Check if the symptoms described in the “Symptom (Results from interview with customer)” are reproduced.
   NOTE:
   Although unit-related error symptoms occur, do not confuse them with other symptoms.

Inspection result

Reproduced>>Connect the connector. Check other units as per the above procedure.
Non-reproduced>>Replace the unit whose connector was disconnected.

COMPONENT DIAGNOSIS

ECM BRANCH LINE CIRCUIT

Diagnosis Procedure

INFOID:0000000001711365

1.CHECK CONNECTOR

1. Turn the ignition switch OFF.
2. Disconnect the battery cable from the negative terminal.
3. Check the following terminals and connectors for damage, bend and loose connection (unit side and connector side).

- ECM
- Harness connector E7
- Harness connector M69

Is the inspection result normal?

YES >> GO TO 2.
NO >> Repair the terminal and connector.

2.CHECK HARNESS FOR OPEN CIRCUIT

1. Disconnect the connector of ECM.
2. Check the resistance between the ECM harness connector terminals.

ECM harness connector			Resistance (Ω)
Connector No.	Terminal No.		
E16	84	83	Approx. 108 – 132

Is the measurement value within the specification?

YES >> GO TO 3.
NO >> Repair the ECM branch line.

3.CHECK POWER SUPPLY AND GROUND CIRCUIT

Check the power supply and the ground circuit of the ECM. Refer to EC-138, "Diagnosis Procedure".

Is the inspection result normal?

YES (Present error)>>Replace the ECM. Refer to EC-75, "Procedure After Replacing ECM".
YES (Past error)>>Error was detected in the ECM branch line.
NO >> Repair the power supply and the ground circuit.

BCM BRANCH LINE CIRCUIT

Diagnosis Procedure

INFOID:0000000001711366

1. CHECK CONNECTOR

1. Turn the ignition switch OFF.
2. Disconnect the battery cable from the negative terminal.
3. Check the terminals and connectors of the BCM for damage, bend and loose connection (unit side and connector side).

Is the inspection result normal?

YES >> GO TO 2.
NO >> Repair the terminal and connector.

2. CHECK HARNESS FOR OPEN CIRCUIT

1. Disconnect the connector of BCM.
2. Check the resistance between the BCM harness connector terminals.

BCM harness connector			Resistance (Ω)
Connector No.	Terminal No.		
M18	39	40	Approx. 54 – 66

Is the measurement value within the specification?

YES >> GO TO 3.
NO >> Repair the BCM branch line.

3. CHECK POWER SUPPLY AND GROUND CIRCUIT

Check the power supply and the ground circuit of the BCM. Refer to BCS-15, "BCM Power Supply and Ground Circuit Inspection".

Is the inspection result normal?

YES (Present error)>>Replace the BCM. Refer to BCS-18, "Removal and Installation of BCM".
YES (Past error)>>Error was detected in the BCM branch line.
NO >> Repair the power supply and the ground circuit.

DLC BRANCH LINE CIRCUIT

Diagnosis Procedure

INFOID:0000000001711367

INSPECTION PROCEDURE

1.CHECK CONNECTOR

1. Turn the ignition switch OFF.
2. Disconnect the battery cable from the negative terminal.
3. Check the terminals and connectors of the data link connector for damage, bend and loose connection (connector side and harness side).

Is the inspection result normal?

YES >> GO TO 2.
NO >> Repair the terminal and connector.

2.CHECK HARNESS FOR OPEN CIRCUIT

Check the resistance between the data link connector terminals.

Data link connector			Resistance (Ω)
Connector No.	Terminal No.		
M22	6	14	Approx. 54 – 66

Is the measurement value within the specification?

YES (Present error)>>Check the CAN system type decision again.
YES (Past error)>>Error was detected in the data link connector branch line circuit.
NO >> Repair the data link connector branch line.

EPS BRANCH LINE CIRCUIT

Diagnosis Procedure

INFOID:0000000001711368

INSPECTION PROCEDURE

1. CHECK CONNECTOR

1. Turn the ignition switch OFF.
2. Disconnect the battery cable from the negative terminal.
3. Check the terminals and connectors of the EPS control unit for damage, bend and loose connection (unit side and connector side).

Is the inspection result normal?

YES >> GO TO 2.
NO >> Repair the terminal and connector.

2. CHECK HARNESS FOR OPEN CIRCUIT

1. Disconnect the connector of EPS control unit.
2. Check the resistance between the EPS control unit harness connector terminals.

EPS control unit harness connector			Resistance (Ω)
Connector No.	Terminal No.		
M53	9	16	Approx. 54 – 66

Is the measurement value within the specification?

YES >> GO TO 3.
NO >> Repair the EPS control unit branch line.

3. CHECK POWER SUPPLY AND GROUND CIRCUIT

Check the power supply and the ground circuit of the EPS control unit. Refer to STC-14, "DTC C1601 BATTERY VOLT".

Is the inspection result normal?

YES (Present error)>>Replace the EPS control unit. Refer to PS-9, "Removal and Installation".
YES (Past error)>>Error was detected in the EPS control unit branch line.
NO >> Repair the power supply and the ground circuit.

I-KEY BRANCH LINE CIRCUIT

Diagnosis Procedure

INFOID:0000000001711369

INSPECTION PROCEDURE

1.CHECK CONNECTOR

1. Turn the ignition switch OFF.
2. Disconnect the battery cable from the negative terminal.
3. Check the terminals and connectors of the Intelligent Key unit for damage, bend and loose connection (unit side and connector side).

Is the inspection result normal?

YES >> GO TO 2.
NO >> Repair the terminal and connector.

2.CHECK HARNESS FOR OPEN CIRCUIT

1. Disconnect the connector of Intelligent Key unit.
2. Check the resistance between the Intelligent Key unit harness connector terminals.

Intelligent Key unit harness connector			Resistance (Ω)
Connector No.	Terminal No.		
M52	2	3	Approx. 54 – 66

Is the measurement value within the specification?

YES >> GO TO 3.
NO >> Repair the Intelligent Key unit branch line.

3.CHECK POWER SUPPLY AND GROUND CIRCUIT

Check the power supply and the ground circuit of the Intelligent Key unit. Refer to BL-110, "Power Supply and Ground Circuit Inspection".

Is the inspection result normal?

YES (Present error)>>Replace the Intelligent Key unit. Refer to BL-142, "Removal and Installation of Intelligent Key Unit".
YES (Past error)>>Error was detected in the Intelligent Key unit branch line.
NO >> Repair the power supply and the ground circuit.

M&A BRANCH LINE CIRCUIT

Diagnosis Procedure

INFOID:0000000001711370

INSPECTION PROCEDURE

1. CHECK CONNECTOR

1. Turn the ignition switch OFF.
2. Disconnect the battery cable from the negative terminal.
3. Check the terminals and connectors of the combination meter for damage, bend and loose connection (unit side and connector side).

Is the inspection result normal?

YES >> GO TO 2.
NO >> Repair the terminal and connector.

2. CHECK HARNESS FOR OPEN CIRCUIT

1. Disconnect the connector of combination meter.
2. Check the resistance between the combination meter harness connector terminals.

Combination meter harness connector			Resistance (Ω)
Connector No.	Terminal No.		
M24	1	2	Approx. 54 – 66

Is the measurement value within the specification?

YES >> GO TO 3.
NO >> Repair the combination meter branch line.

3. CHECK POWER SUPPLY AND GROUND CIRCUIT

Check the power supply and the ground circuit of the combination meter. Refer to DI-15, "Power Supply and Ground Circuit Inspection".

Is the inspection result normal?

YES (Present error)>>Replace the combination meter. Refer to DI-20, "Removal and Installation".
YES (Past error)>>Error was detected in the combination meter branch line.
NO >> Repair the power supply and the ground circuit.

IPDM-E BRANCH LINE CIRCUIT

Diagnosis Procedure

INFOID:0000000001711375

INSPECTION PROCEDURE

1.CHECK CONNECTOR

1. Turn the ignition switch OFF.
2. Disconnect the battery cable from the negative terminal.
3. Check the following terminals and connectors for damage, bend and loose connection (unit side and connector side).

- IPDM E/R
- Harness connector E7 (Models without ABS)
- Harness connector M69 (Models without ABS)

Is the inspection result normal?

YES >> GO TO 2.
NO >> Repair the terminal and connector.

2.CHECK HARNESS FOR OPEN CIRCUIT

1. Disconnect the connector of IPDM E/R.
2. Check the resistance between the IPDM E/R harness connector terminals.

IPDM E/R harness connector			Resistance (Ω)
Connector No.	Terminal No.		
E46	41	40	Approx. 108 – 132

Is the measurement value within the specification?

YES >> GO TO 3.
NO >> Repair the IPDM E/R branch line.

3.CHECK POWER SUPPLY AND GROUND CIRCUIT

Check the power supply and the ground circuit of the IPDM E/R. Refer to PG-25, "IPDM E/R Power/Ground Circuit Inspection".

Is the inspection result normal?

YES (Present error)>>Replace the IPDM E/R. Refer to PG-26, "Removal and Installation of IPDM E/R".
YES (Past error)>>Error was detected in the IPDM E/R branch line.
NO >> Repair the power supply and the ground circuit.

CAN COMMUNICATION CIRCUIT

Diagnosis Procedure

INFOID:0000000001711376

INSPECTION PROCEDURE

1. CONNECTOR INSPECTION

1. Turn the ignition switch OFF.
2. Disconnect the battery cable from the negative terminal.
3. Disconnect all the unit connectors on CAN communication system.
4. Check terminals and connectors for damage, bend and loose connection.

Is the inspection result normal?

YES >> GO TO 2.
NO >> Repair the terminal and connector.

2. CHECK HARNESS CONTINUITY (SHORT CIRCUIT)

Check the continuity between the data link connector terminals.

Data link connector			Continuity
Connector No.	Terminal No.		
M22	6	14	Not existed

Is the inspection result normal?

YES >> GO TO 3.
NO >> Check the harness and repair the root cause.

3. CHECK HARNESS CONTINUITY (SHORT CIRCUIT)

Check the continuity between the data link connector and the ground.

Data link connector		Ground	Continuity
Connector No.	Terminal No.		
M22	6		Not existed
	14		Not existed

Is the inspection result normal?

YES >> GO TO 4.
NO >> Check the harness and repair the root cause.

4. CHECK ECM AND IPDM E/R TERMINATION CIRCUIT

1. Remove the ECM and the IPDM E/R.
2. Check the resistance between the ECM terminals.

ECM		Resistance (Ω)
Terminal No.		
84	83	Approx. 108 – 132

3. Check the resistance between the IPDM E/R terminals.

IPDM E/R		Resistance (Ω)
Terminal No.		
41	40	Approx. 108 – 132

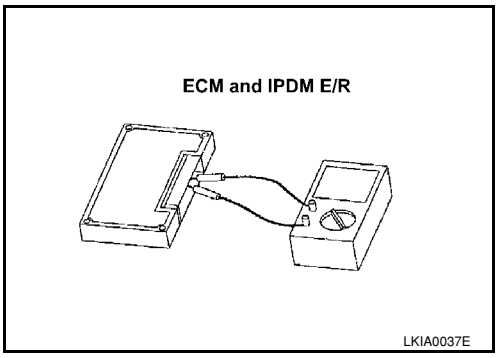

Is the measurement value within the specification?

YES >> GO TO 5.
NO >> Replace the ECM and/or the IPDM E/R.

5. CHECK SYMPTOM

Connect all the connectors. Check if the symptoms described in the “Symptom (Results from interview with customer)” are reproduced.

Inspection result

Reproduced>>GO TO 6.
Non-reproduced>>Start the diagnosis again. Follow the trouble diagnosis procedure when past error is detected.

6. CHECK UNIT REPRODUCTION

Perform the reproduction test as per the following procedure for each unit.

1. Turn the ignition switch OFF.
2. Disconnect the battery cable from the negative terminal.
3. Disconnect one of the unit connectors of CAN communication system.
   NOTE:
   ECM and IPDM E/R have a termination circuit. Check other units first.
4. Connect the battery cable to the negative terminal. Check if the symptoms described in the “Symptom (Results from interview with customer)” are reproduced.
   NOTE:
   Although unit-related error symptoms occur, do not confuse them with other symptoms.

Inspection result

Reproduced>>Connect the connector. Check other units as per the above procedure.
Non-reproduced>>Replace the unit whose connector was disconnected.

COMPONENT DIAGNOSIS

MAIN LINE BETWEEN DLC AND ABS CIRCUIT

Diagnosis Procedure

INFOID:0000000001711382

INSPECTION PROCEDURE

1. CHECK CONNECTOR

1. Turn the ignition switch OFF.
2. Disconnect the battery cable from the negative terminal.
3. Check the following terminals and connectors for damage, bend and loose connection (connector side and harness side).

- Harness connector M69
- Harness connector E7

Is the inspection result normal?

YES >> GO TO 2.
NO >> Repair the terminal and connector.

2. CHECK HARNESS CONTINUITY (OPEN CIRCUIT)

1. Disconnect the harness connectors M69 and E7.
2. Check the continuity between the data link connector and the harness connector.

Data link connector		Harness connector		Continuity
Connector No.	Terminal No.	Connector No.	Terminal No.	
M22	6	M69	32A	Existed
	14		31A	Existed

Is the inspection result normal?

YES >> GO TO 3.
NO >> Repair the main line between the data link connector and the harness connector M69.

3. CHECK HARNESS CONTINUITY (OPEN CIRCUIT)

1. Disconnect the connector of ABS actuator and electric unit (control unit).
2. Check the continuity between the harness connector and the ABS actuator and electric unit (control unit) harness connector.

Harness connector		ABS actuator and electric unit (control unit) harness connector		Continuity
Connector No.	Terminal No.	Connector No.	Terminal No.	
E7	32A	E33	26	Existed
	31A		15	Existed

Is the inspection result normal?

YES (Present error)>>Check CAN system type decision again.
YES (Past error)>>Error was detected in the main line between the data link connector and the ABS actuator and electric unit (control unit).
NO >> Repair the main line between the harness connector E7 and the ABS actuator and electric unit (control unit).

ECM BRANCH LINE CIRCUIT

Diagnosis Procedure

INFOID:0000000001711385

1.CHECK CONNECTOR

1. Turn the ignition switch OFF.
2. Disconnect the battery cable from the negative terminal.
3. Check the following terminals and connectors for damage, bend and loose connection (unit side and connector side).

- ECM
- Harness connector E7
- Harness connector M69

Is the inspection result normal?

YES >> GO TO 2.
NO >> Repair the terminal and connector.

2.CHECK HARNESS FOR OPEN CIRCUIT

1. Disconnect the connector of ECM.
2. Check the resistance between the ECM harness connector terminals.

ECM harness connector			Resistance (Ω)
Connector No.	Terminal No.		
E16	84	83	Approx. 108 – 132

Is the measurement value within the specification?

YES >> GO TO 3.
NO >> Repair the ECM branch line.

3.CHECK POWER SUPPLY AND GROUND CIRCUIT

Check the power supply and the ground circuit of the ECM. Refer to EC-138, "Diagnosis Procedure".

Is the inspection result normal?

YES (Present error)>>Replace the ECM. Refer to EC-75, "Procedure After Replacing ECM".
YES (Past error)>>Error was detected in the ECM branch line.
NO >> Repair the power supply and the ground circuit.

BCM BRANCH LINE CIRCUIT

Diagnosis Procedure

INFOID:0000000001711386

1.CHECK CONNECTOR

1. Turn the ignition switch OFF.
2. Disconnect the battery cable from the negative terminal.
3. Check the terminals and connectors of the BCM for damage, bend and loose connection (unit side and connector side).

Is the inspection result normal?

YES >> GO TO 2.
NO >> Repair the terminal and connector.

2.CHECK HARNESS FOR OPEN CIRCUIT

1. Disconnect the connector of BCM.
2. Check the resistance between the BCM harness connector terminals.

BCM harness connector			Resistance (Ω)
Connector No.	Terminal No.		
M18	39	40	Approx. 54 – 66

Is the measurement value within the specification?

YES >> GO TO 3.
NO >> Repair the BCM branch line.

3.CHECK POWER SUPPLY AND GROUND CIRCUIT

Check the power supply and the ground circuit of the BCM. Refer to BCS-15, "BCM Power Supply and Ground Circuit Inspection".

Is the inspection result normal?

YES (Present error)>>Replace the BCM. Refer to BCS-18, "Removal and Installation of BCM".
YES (Past error)>>Error was detected in the BCM branch line.
NO >> Repair the power supply and the ground circuit.

DLC BRANCH LINE CIRCUIT

Diagnosis Procedure

INFOID:0000000001711387

INSPECTION PROCEDURE

1.CHECK CONNECTOR

1. Turn the ignition switch OFF.
2. Disconnect the battery cable from the negative terminal.
3. Check the terminals and connectors of the data link connector for damage, bend and loose connection (connector side and harness side).

Is the inspection result normal?

YES >> GO TO 2.
NO >> Repair the terminal and connector.

2.CHECK HARNESS FOR OPEN CIRCUIT

Check the resistance between the data link connector terminals.

Data link connector			Resistance (Ω)
Connector No.	Terminal No.		
M22	6	14	Approx. 54 – 66

Is the measurement value within the specification?

YES (Present error)>>Check the CAN system type decision again.
YES (Past error)>>Error was detected in the data link connector branch line circuit.
NO >> Repair the data link connector branch line.

EPS BRANCH LINE CIRCUIT

Diagnosis Procedure

INFOID:0000000001711388

INSPECTION PROCEDURE

1. CHECK CONNECTOR

1. Turn the ignition switch OFF.
2. Disconnect the battery cable from the negative terminal.
3. Check the terminals and connectors of the EPS control unit for damage, bend and loose connection (unit side and connector side).

Is the inspection result normal?

YES >> GO TO 2.
NO >> Repair the terminal and connector.

2. CHECK HARNESS FOR OPEN CIRCUIT

1. Disconnect the connector of EPS control unit.
2. Check the resistance between the EPS control unit harness connector terminals.

EPS control unit harness connector			Resistance (Ω)
Connector No.	Terminal No.		
M53	9	16	Approx. 54 – 66

Is the measurement value within the specification?

YES >> GO TO 3.
NO >> Repair the EPS control unit branch line.

3. CHECK POWER SUPPLY AND GROUND CIRCUIT

Check the power supply and the ground circuit of the EPS control unit. Refer to STC-14, "DTC C1601 BATTERY VOLT".

Is the inspection result normal?

YES (Present error)>>Replace the EPS control unit. Refer to PS-9, "Removal and Installation".
YES (Past error)>>Error was detected in the EPS control unit branch line.
NO >> Repair the power supply and the ground circuit.

M&A BRANCH LINE CIRCUIT

Diagnosis Procedure

INFOID:0000000001711390

INSPECTION PROCEDURE

1.CHECK CONNECTOR

1. Turn the ignition switch OFF.
2. Disconnect the battery cable from the negative terminal.
3. Check the terminals and connectors of the combination meter for damage, bend and loose connection (unit side and connector side).

Is the inspection result normal?

YES >> GO TO 2.
NO >> Repair the terminal and connector.

2.CHECK HARNESS FOR OPEN CIRCUIT

1. Disconnect the connector of combination meter.
2. Check the resistance between the combination meter harness connector terminals.

Combination meter harness connector			Resistance (Ω)
Connector No.	Terminal No.		
M24	1	2	Approx. 54 – 66

Is the measurement value within the specification?

YES >> GO TO 3.
NO >> Repair the combination meter branch line.

3.CHECK POWER SUPPLY AND GROUND CIRCUIT

Check the power supply and the ground circuit of the combination meter. Refer to DI-15, "Power Supply and Ground Circuit Inspection".

Is the inspection result normal?

YES (Present error)>>Replace the combination meter. Refer to DI-20, "Removal and Installation".
YES (Past error)>>Error was detected in the combination meter branch line.
NO >> Repair the power supply and the ground circuit.

ABS BRANCH LINE CIRCUIT

Diagnosis Procedure

INFOID:0000000001711393

1. CHECK CONNECTOR

1. Turn the ignition switch OFF.
2. Disconnect the battery cable from the negative terminal.
3. Check the terminals and connectors of the ABS actuator and electric unit (control unit) for damage, bend and loose connection (unit side and connector side).

Is the inspection result normal?

YES >> GO TO 2.
NO >> Repair the terminal and connector.

2. CHECK HARNESS FOR OPEN CIRCUIT

1. Disconnect the connector of ABS actuator and electric unit (control unit).
2. Check the resistance between the ABS actuator and electric unit (control unit) harness connector terminals.

ABS actuator and electric unit (control unit) harness connector			Resistance (Ω)
Connector No.	Terminal No.		
E33	26	15	Approx. 54 – 66

Is the measurement value within the specification?

YES >> GO TO 3.
NO >> Repair the ABS actuator and electric unit (control unit) branch line.

3. CHECK POWER SUPPLY AND GROUND CIRCUIT

Check the power supply and the ground circuit of the ABS actuator and electric unit (control unit). Refer to BRC-27, "ABS Control Unit Power and Ground Systems Inspection".

Is the inspection result normal?

YES (Present error)>>Replace the ABS actuator and electric unit (control unit). Refer to BRC-35, "Removal and Installation".
YES (Past error)>>Error was detected in the ABS actuator and electric unit (control unit) branch line.
NO >> Repair the power supply and the ground circuit.

IPDM-E BRANCH LINE CIRCUIT

Diagnosis Procedure

INFOID:0000000001711395

INSPECTION PROCEDURE

1.CHECK CONNECTOR

1. Turn the ignition switch OFF.
2. Disconnect the battery cable from the negative terminal.
3. Check the following terminals and connectors for damage, bend and loose connection (unit side and connector side).

- IPDM E/R
- Harness connector E7 (Models without ABS)
- Harness connector M69 (Models without ABS)

Is the inspection result normal?

YES >> GO TO 2.
NO >> Repair the terminal and connector.

2.CHECK HARNESS FOR OPEN CIRCUIT

1. Disconnect the connector of IPDM E/R.
2. Check the resistance between the IPDM E/R harness connector terminals.

IPDM E/R harness connector			Resistance (Ω)
Connector No.	Terminal No.		
E46	41	40	Approx. 108 – 132

Is the measurement value within the specification?

YES >> GO TO 3.
NO >> Repair the IPDM E/R branch line.

3.CHECK POWER SUPPLY AND GROUND CIRCUIT

Check the power supply and the ground circuit of the IPDM E/R. Refer to PG-25, "IPDM E/R Power/Ground Circuit Inspection".

Is the inspection result normal?

YES (Present error)>>Replace the IPDM E/R. Refer to PG-26, "Removal and Installation of IPDM E/R".
YES (Past error)>>Error was detected in the IPDM E/R branch line.
NO >> Repair the power supply and the ground circuit.

CAN COMMUNICATION CIRCUIT

Diagnosis Procedure

INFOID:0000000001711396

INSPECTION PROCEDURE

1. CONNECTOR INSPECTION

1. Turn the ignition switch OFF.
2. Disconnect the battery cable from the negative terminal.
3. Disconnect all the unit connectors on CAN communication system.
4. Check terminals and connectors for damage, bend and loose connection.

Is the inspection result normal?

YES >> GO TO 2.
NO >> Repair the terminal and connector.

2. CHECK HARNESS CONTINUITY (SHORT CIRCUIT)

Check the continuity between the data link connector terminals.

Data link connector			Continuity
Connector No.	Terminal No.		
M22	6	14	Not existed

Is the inspection result normal?

YES >> GO TO 3.
NO >> Check the harness and repair the root cause.

3. CHECK HARNESS CONTINUITY (SHORT CIRCUIT)

Check the continuity between the data link connector and the ground.

Data link connector		Ground	Continuity
Connector No.	Terminal No.		
M22	6		Not existed
	14		Not existed

Is the inspection result normal?

YES >> GO TO 4.
NO >> Check the harness and repair the root cause.

4. CHECK ECM AND IPDM E/R TERMINATION CIRCUIT

1. Remove the ECM and the IPDM E/R.
2. Check the resistance between the ECM terminals.

ECM		Resistance (Ω)
Terminal No.		
84	83	Approx. 108 – 132

3. Check the resistance between the IPDM E/R terminals.

IPDM E/R		Resistance (Ω)
Terminal No.		
41	40	Approx. 108 – 132

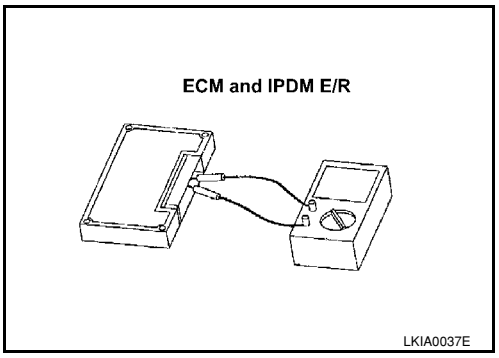

Is the measurement value within the specification?

YES >> GO TO 5.
NO >> Replace the ECM and/or the IPDM E/R.

5. CHECK SYMPTOM

Connect all the connectors. Check if the symptoms described in the “Symptom (Results from interview with customer)” are reproduced.

Inspection result

Reproduced>>GO TO 6.
Non-reproduced>>Start the diagnosis again. Follow the trouble diagnosis procedure when past error is detected.

6. CHECK UNIT REPRODUCTION

Perform the reproduction test as per the following procedure for each unit.

1. Turn the ignition switch OFF.
2. Disconnect the battery cable from the negative terminal.
3. Disconnect one of the unit connectors of CAN communication system.
   NOTE:
   ECM and IPDM E/R have a termination circuit. Check other units first.
4. Connect the battery cable to the negative terminal. Check if the symptoms described in the “Symptom (Results from interview with customer)” are reproduced.
   NOTE:
   Although unit-related error symptoms occur, do not confuse them with other symptoms.

Inspection result

Reproduced>>Connect the connector. Check other units as per the above procedure.
Non-reproduced>>Replace the unit whose connector was disconnected.

COMPONENT DIAGNOSIS

MAIN LINE BETWEEN DLC AND ABS CIRCUIT

Diagnosis Procedure

INFOID:0000000001711402

INSPECTION PROCEDURE

1. CHECK CONNECTOR

1. Turn the ignition switch OFF.
2. Disconnect the battery cable from the negative terminal.
3. Check the following terminals and connectors for damage, bend and loose connection (connector side and harness side).

- Harness connector M69
- Harness connector E7

Is the inspection result normal?

YES >> GO TO 2.
NO >> Repair the terminal and connector.

2. CHECK HARNESS CONTINUITY (OPEN CIRCUIT)

1. Disconnect the harness connectors M69 and E7.
2. Check the continuity between the data link connector and the harness connector.

Data link connector		Harness connector		Continuity
Connector No.	Terminal No.	Connector No.	Terminal No.	
M22	6	M69	32A	Existed
	14		31A	Existed

Is the inspection result normal?

YES >> GO TO 3.
NO >> Repair the main line between the data link connector and the harness connector M69.

3. CHECK HARNESS CONTINUITY (OPEN CIRCUIT)

1. Disconnect the connector of ABS actuator and electric unit (control unit).
2. Check the continuity between the harness connector and the ABS actuator and electric unit (control unit) harness connector.

Harness connector		ABS actuator and electric unit (control unit) harness connector		Continuity
Connector No.	Terminal No.	Connector No.	Terminal No.	
E7	32A	E33	26	Existed
	31A		15	Existed

Is the inspection result normal?

YES (Present error)>>Check CAN system type decision again.
YES (Past error)>>Error was detected in the main line between the data link connector and the ABS actuator and electric unit (control unit).
NO >> Repair the main line between the harness connector E7 and the ABS actuator and electric unit (control unit).

ECM BRANCH LINE CIRCUIT

Diagnosis Procedure

INFOID:0000000001711405

1.CHECK CONNECTOR

1. Turn the ignition switch OFF.
2. Disconnect the battery cable from the negative terminal.
3. Check the following terminals and connectors for damage, bend and loose connection (unit side and connector side).

- ECM
- Harness connector E7
- Harness connector M69

Is the inspection result normal?

YES >> GO TO 2.
NO >> Repair the terminal and connector.

2.CHECK HARNESS FOR OPEN CIRCUIT

1. Disconnect the connector of ECM.
2. Check the resistance between the ECM harness connector terminals.

ECM harness connector			Resistance (Ω)
Connector No.	Terminal No.		
E16	84	83	Approx. 108 – 132

Is the measurement value within the specification?

YES >> GO TO 3.
NO >> Repair the ECM branch line.

3.CHECK POWER SUPPLY AND GROUND CIRCUIT

Check the power supply and the ground circuit of the ECM. Refer to EC-138, "Diagnosis Procedure".

Is the inspection result normal?

YES (Present error)>>Replace the ECM. Refer to EC-75, "Procedure After Replacing ECM".
YES (Past error)>>Error was detected in the ECM branch line.
NO >> Repair the power supply and the ground circuit.

BCM BRANCH LINE CIRCUIT

Diagnosis Procedure

INFOID:0000000001711406

1.CHECK CONNECTOR

1. Turn the ignition switch OFF.
2. Disconnect the battery cable from the negative terminal.
3. Check the terminals and connectors of the BCM for damage, bend and loose connection (unit side and connector side).

Is the inspection result normal?

YES >> GO TO 2.
NO >> Repair the terminal and connector.

2.CHECK HARNESS FOR OPEN CIRCUIT

1. Disconnect the connector of BCM.
2. Check the resistance between the BCM harness connector terminals.

BCM harness connector			Resistance (Ω)
Connector No.	Terminal No.		
M18	39	40	Approx. 54 – 66

Is the measurement value within the specification?

YES >> GO TO 3.
NO >> Repair the BCM branch line.

3.CHECK POWER SUPPLY AND GROUND CIRCUIT

Check the power supply and the ground circuit of the BCM. Refer to BCS-15, "BCM Power Supply and Ground Circuit Inspection".

Is the inspection result normal?

YES (Present error)>>Replace the BCM. Refer to BCS-18, "Removal and Installation of BCM".
YES (Past error)>>Error was detected in the BCM branch line.
NO >> Repair the power supply and the ground circuit.

DLC BRANCH LINE CIRCUIT

Diagnosis Procedure

INFOID:0000000001711407

INSPECTION PROCEDURE

1.CHECK CONNECTOR

1. Turn the ignition switch OFF.
2. Disconnect the battery cable from the negative terminal.
3. Check the terminals and connectors of the data link connector for damage, bend and loose connection (connector side and harness side).

Is the inspection result normal?

YES >> GO TO 2.
NO >> Repair the terminal and connector.

2.CHECK HARNESS FOR OPEN CIRCUIT

Check the resistance between the data link connector terminals.

Data link connector			Resistance (Ω)
Connector No.	Terminal No.		
M22	6	14	Approx. 54 – 66

Is the measurement value within the specification?

YES (Present error)>>Check the CAN system type decision again.
YES (Past error)>>Error was detected in the data link connector branch line circuit.
NO >> Repair the data link connector branch line.

EPS BRANCH LINE CIRCUIT

Diagnosis Procedure

INFOID:0000000001711408

INSPECTION PROCEDURE

1. CHECK CONNECTOR

1. Turn the ignition switch OFF.
2. Disconnect the battery cable from the negative terminal.
3. Check the terminals and connectors of the EPS control unit for damage, bend and loose connection (unit side and connector side).

Is the inspection result normal?

YES >> GO TO 2.
NO >> Repair the terminal and connector.

2. CHECK HARNESS FOR OPEN CIRCUIT

1. Disconnect the connector of EPS control unit.
2. Check the resistance between the EPS control unit harness connector terminals.

EPS control unit harness connector			Resistance (Ω)
Connector No.	Terminal No.		
M53	9	16	Approx. 54 – 66

Is the measurement value within the specification?

YES >> GO TO 3.
NO >> Repair the EPS control unit branch line.

3. CHECK POWER SUPPLY AND GROUND CIRCUIT

Check the power supply and the ground circuit of the EPS control unit. Refer to STC-14, "DTC C1601 BATTERY VOLT".

Is the inspection result normal?

YES (Present error)>>Replace the EPS control unit. Refer to PS-9, "Removal and Installation".
YES (Past error)>>Error was detected in the EPS control unit branch line.
NO >> Repair the power supply and the ground circuit.

I-KEY BRANCH LINE CIRCUIT

Diagnosis Procedure

INFOID:0000000001711409

INSPECTION PROCEDURE

1.CHECK CONNECTOR

1. Turn the ignition switch OFF.
2. Disconnect the battery cable from the negative terminal.
3. Check the terminals and connectors of the Intelligent Key unit for damage, bend and loose connection (unit side and connector side).

Is the inspection result normal?

YES >> GO TO 2.
NO >> Repair the terminal and connector.

2.CHECK HARNESS FOR OPEN CIRCUIT

1. Disconnect the connector of Intelligent Key unit.
2. Check the resistance between the Intelligent Key unit harness connector terminals.

Intelligent Key unit harness connector			Resistance (Ω)
Connector No.	Terminal No.		
M52	2	3	Approx. 54 – 66

Is the measurement value within the specification?

YES >> GO TO 3.
NO >> Repair the Intelligent Key unit branch line.

3.CHECK POWER SUPPLY AND GROUND CIRCUIT

Check the power supply and the ground circuit of the Intelligent Key unit. Refer to BL-110, "Power Supply and Ground Circuit Inspection".

Is the inspection result normal?

YES (Present error)>>Replace the Intelligent Key unit. Refer to BL-142, "Removal and Installation of Intelligent Key Unit".
YES (Past error)>>Error was detected in the Intelligent Key unit branch line.
NO >> Repair the power supply and the ground circuit.

M&A BRANCH LINE CIRCUIT

Diagnosis Procedure

INFOID:0000000001711410

INSPECTION PROCEDURE

1.CHECK CONNECTOR

1. Turn the ignition switch OFF.
2. Disconnect the battery cable from the negative terminal.
3. Check the terminals and connectors of the combination meter for damage, bend and loose connection (unit side and connector side).

Is the inspection result normal?

YES >> GO TO 2.
NO >> Repair the terminal and connector.

2.CHECK HARNESS FOR OPEN CIRCUIT

1. Disconnect the connector of combination meter.
2. Check the resistance between the combination meter harness connector terminals.

Combination meter harness connector			Resistance (Ω)
Connector No.	Terminal No.		
M24	1	2	Approx. 54 – 66

Is the measurement value within the specification?

YES >> GO TO 3.
NO >> Repair the combination meter branch line.

3.CHECK POWER SUPPLY AND GROUND CIRCUIT

Check the power supply and the ground circuit of the combination meter. Refer to DI-15, "Power Supply and Ground Circuit Inspection".

Is the inspection result normal?

YES (Present error)>>Replace the combination meter. Refer to DI-20, "Removal and Installation".
YES (Past error)>>Error was detected in the combination meter branch line.
NO >> Repair the power supply and the ground circuit.

ABS BRANCH LINE CIRCUIT

Diagnosis Procedure

INFOID:0000000001711413

1. CHECK CONNECTOR

1. Turn the ignition switch OFF.
2. Disconnect the battery cable from the negative terminal.
3. Check the terminals and connectors of the ABS actuator and electric unit (control unit) for damage, bend and loose connection (unit side and connector side).

Is the inspection result normal?

YES >> GO TO 2.
NO >> Repair the terminal and connector.

2. CHECK HARNESS FOR OPEN CIRCUIT

1. Disconnect the connector of ABS actuator and electric unit (control unit).
2. Check the resistance between the ABS actuator and electric unit (control unit) harness connector terminals.

ABS actuator and electric unit (control unit) harness connector			Resistance (Ω)
Connector No.	Terminal No.		
E33	26	15	Approx. 54 – 66

Is the measurement value within the specification?

YES >> GO TO 3.
NO >> Repair the ABS actuator and electric unit (control unit) branch line.

3. CHECK POWER SUPPLY AND GROUND CIRCUIT

Check the power supply and the ground circuit of the ABS actuator and electric unit (control unit). Refer to BRC-27, "ABS Control Unit Power and Ground Systems Inspection".

Is the inspection result normal?

YES (Present error)>>Replace the ABS actuator and electric unit (control unit). Refer to BRC-35, "Removal and Installation".
YES (Past error)>>Error was detected in the ABS actuator and electric unit (control unit) branch line.
NO >> Repair the power supply and the ground circuit.

IPDM-E BRANCH LINE CIRCUIT

Diagnosis Procedure

INFOID:0000000001711415

INSPECTION PROCEDURE

1.CHECK CONNECTOR

1. Turn the ignition switch OFF.
2. Disconnect the battery cable from the negative terminal.
3. Check the following terminals and connectors for damage, bend and loose connection (unit side and connector side).

- IPDM E/R
- Harness connector E7 (Models without ABS)
- Harness connector M69 (Models without ABS)

Is the inspection result normal?

YES >> GO TO 2.
NO >> Repair the terminal and connector.

2.CHECK HARNESS FOR OPEN CIRCUIT

1. Disconnect the connector of IPDM E/R.
2. Check the resistance between the IPDM E/R harness connector terminals.

IPDM E/R harness connector			Resistance (Ω)
Connector No.	Terminal No.		
E46	41	40	Approx. 108 – 132

Is the measurement value within the specification?

YES >> GO TO 3.
NO >> Repair the IPDM E/R branch line.

3.CHECK POWER SUPPLY AND GROUND CIRCUIT

Check the power supply and the ground circuit of the IPDM E/R. Refer to PG-25, "IPDM E/R Power/Ground Circuit Inspection".

Is the inspection result normal?

YES (Present error)>>Replace the IPDM E/R. Refer to PG-26, "Removal and Installation of IPDM E/R".
YES (Past error)>>Error was detected in the IPDM E/R branch line.
NO >> Repair the power supply and the ground circuit.

CAN COMMUNICATION CIRCUIT

Diagnosis Procedure

INFOID:0000000001711416

INSPECTION PROCEDURE

1. CONNECTOR INSPECTION

1. Turn the ignition switch OFF.
2. Disconnect the battery cable from the negative terminal.
3. Disconnect all the unit connectors on CAN communication system.
4. Check terminals and connectors for damage, bend and loose connection.

Is the inspection result normal?

YES >> GO TO 2.
NO >> Repair the terminal and connector.

2. CHECK HARNESS CONTINUITY (SHORT CIRCUIT)

Check the continuity between the data link connector terminals.

Data link connector			Continuity
Connector No.	Terminal No.		
M22	6	14	Not existed

Is the inspection result normal?

YES >> GO TO 3.
NO >> Check the harness and repair the root cause.

3. CHECK HARNESS CONTINUITY (SHORT CIRCUIT)

Check the continuity between the data link connector and the ground.

Data link connector		Ground	Continuity
Connector No.	Terminal No.		
M22	6		Not existed
	14		Not existed

Is the inspection result normal?

YES >> GO TO 4.
NO >> Check the harness and repair the root cause.

4. CHECK ECM AND IPDM E/R TERMINATION CIRCUIT

1. Remove the ECM and the IPDM E/R.
2. Check the resistance between the ECM terminals.

ECM		Resistance (Ω)
Terminal No.		
84	83	Approx. 108 – 132

3. Check the resistance between the IPDM E/R terminals.

IPDM E/R		Resistance (Ω)
Terminal No.		
41	40	Approx. 108 – 132

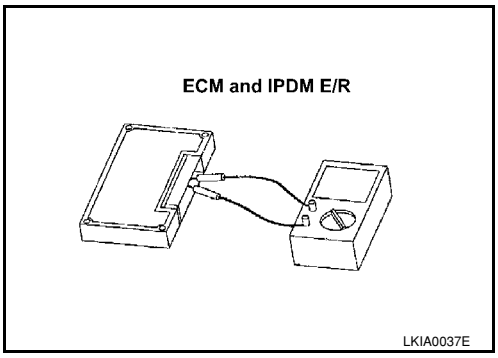

Is the measurement value within the specification?

YES >> GO TO 5.
NO >> Replace the ECM and/or the IPDM E/R.

5. CHECK SYMPTOM

Connect all the connectors. Check if the symptoms described in the “Symptom (Results from interview with customer)” are reproduced.

Inspection result

Reproduced>>GO TO 6.
Non-reproduced>>Start the diagnosis again. Follow the trouble diagnosis procedure when past error is detected.

6. CHECK UNIT REPRODUCTION

Perform the reproduction test as per the following procedure for each unit.

1. Turn the ignition switch OFF.
2. Disconnect the battery cable from the negative terminal.
3. Disconnect one of the unit connectors of CAN communication system.
   NOTE:
   ECM and IPDM E/R have a termination circuit. Check other units first.
4. Connect the battery cable to the negative terminal. Check if the symptoms described in the “Symptom (Results from interview with customer)” are reproduced.
   NOTE:
   Although unit-related error symptoms occur, do not confuse them with other symptoms.

Inspection result

Reproduced>>Connect the connector. Check other units as per the above procedure.
Non-reproduced>>Replace the unit whose connector was disconnected.

COMPONENT DIAGNOSIS

MAIN LINE BETWEEN DLC AND TCM CIRCUIT

Diagnosis Procedure

INFOID:0000000001711423

INSPECTION PROCEDURE

1.CHECK CONNECTOR

1. Turn the ignition switch OFF.
2. Disconnect the battery cable from the negative terminal.
3. Check the following terminals and connectors for damage, bend and loose connection (connector side and harness side).

- Harness connector M69
- Harness connector E7

Is the inspection result normal?

YES >> GO TO 2.
NO >> Repair the terminal and connector.

2.CHECK HARNESS CONTINUITY (OPEN CIRCUIT)

1. Disconnect the harness connectors M69 and E7.
2. Check the continuity between the data link connector and the harness connector.

Data link connector		Harness connector		Continuity
Connector No.	Terminal No.	Connector No.	Terminal No.	
M22	6	M69	32A	Existed
	14		31A	Existed

Is the inspection result normal?

YES >> GO TO 3.
NO >> Repair the main line between the data link connector and the harness connector M69.

3.CHECK HARNESS CONTINUITY (OPEN CIRCUIT)

1. Disconnect the connector of TCM.
2. Check the continuity between the harness connector and the TCM.

Harness connector		TCM harness connector		Continuity
Connector No.	Terminal No.	Connector No.	Terminal No.	
E7	32A	E31	5	Existed
	31A		6	Existed

Is the inspection result normal?

YES (Present error)>>Check CAN system type decision again.
YES (Past error)>>Error was detected in the main line between the data link connector and the TCM.
NO >> Repair the main line between the harness connector E7 and the TCM.

ECM BRANCH LINE CIRCUIT

Diagnosis Procedure

INFOID:0000000001711425

1. CHECK CONNECTOR

1. Turn the ignition switch OFF.
2. Disconnect the battery cable from the negative terminal.
3. Check the following terminals and connectors for damage, bend and loose connection (unit side and connector side).

- ECM
- Harness connector E7
- Harness connector M69

Is the inspection result normal?

YES >> GO TO 2.
NO >> Repair the terminal and connector.

2. CHECK HARNESS FOR OPEN CIRCUIT

1. Disconnect the connector of ECM.
2. Check the resistance between the ECM harness connector terminals.

ECM harness connector			Resistance (Ω)
Connector No.	Terminal No.		
E16	84	83	Approx. 108 – 132

Is the measurement value within the specification?

YES >> GO TO 3.
NO >> Repair the ECM branch line.

3. CHECK POWER SUPPLY AND GROUND CIRCUIT

Check the power supply and the ground circuit of the ECM. Refer to EC-138, "Diagnosis Procedure".

Is the inspection result normal?

YES (Present error)>>Replace the ECM. Refer to EC-75, "Procedure After Replacing ECM".
YES (Past error)>>Error was detected in the ECM branch line.
NO >> Repair the power supply and the ground circuit.

BCM BRANCH LINE CIRCUIT

Diagnosis Procedure

INFOID:0000000001711426

1.CHECK CONNECTOR

1. Turn the ignition switch OFF.
2. Disconnect the battery cable from the negative terminal.
3. Check the terminals and connectors of the BCM for damage, bend and loose connection (unit side and connector side).

Is the inspection result normal?

YES >> GO TO 2.
NO >> Repair the terminal and connector.

2.CHECK HARNESS FOR OPEN CIRCUIT

1. Disconnect the connector of BCM.
2. Check the resistance between the BCM harness connector terminals.

BCM harness connector			Resistance (Ω)
Connector No.	Terminal No.		
M18	39	40	Approx. 54 – 66

Is the measurement value within the specification?

YES >> GO TO 3.
NO >> Repair the BCM branch line.

3.CHECK POWER SUPPLY AND GROUND CIRCUIT

Check the power supply and the ground circuit of the BCM. Refer to BCS-15, "BCM Power Supply and Ground Circuit Inspection".

Is the inspection result normal?

YES (Present error)>>Replace the BCM. Refer to BCS-18, "Removal and Installation of BCM".
YES (Past error)>>Error was detected in the BCM branch line.
NO >> Repair the power supply and the ground circuit.

DLC BRANCH LINE CIRCUIT

Diagnosis Procedure

INFOID:0000000001711427

INSPECTION PROCEDURE

1. CHECK CONNECTOR

1. Turn the ignition switch OFF.
2. Disconnect the battery cable from the negative terminal.
3. Check the terminals and connectors of the data link connector for damage, bend and loose connection (connector side and harness side).

Is the inspection result normal?

YES >> GO TO 2.
NO >> Repair the terminal and connector.

2. CHECK HARNESS FOR OPEN CIRCUIT

Check the resistance between the data link connector terminals.

Data link connector			Resistance (Ω)
Connector No.	Terminal No.		
M22	6	14	Approx. 54 – 66

Is the measurement value within the specification?

YES (Present error)>>Check the CAN system type decision again.
YES (Past error)>>Error was detected in the data link connector branch line circuit.
NO >> Repair the data link connector branch line.

EPS BRANCH LINE CIRCUIT

Diagnosis Procedure

INFOID:0000000001711428

INSPECTION PROCEDURE

1.CHECK CONNECTOR

1. Turn the ignition switch OFF.
2. Disconnect the battery cable from the negative terminal.
3. Check the terminals and connectors of the EPS control unit for damage, bend and loose connection (unit side and connector side).

Is the inspection result normal?

YES >> GO TO 2.
NO >> Repair the terminal and connector.

2.CHECK HARNESS FOR OPEN CIRCUIT

1. Disconnect the connector of EPS control unit.
2. Check the resistance between the EPS control unit harness connector terminals.

EPS control unit harness connector			Resistance (Ω)
Connector No.	Terminal No.		
M53	9	16	Approx. 54 – 66

Is the measurement value within the specification?

YES >> GO TO 3.
NO >> Repair the EPS control unit branch line.

3.CHECK POWER SUPPLY AND GROUND CIRCUIT

Check the power supply and the ground circuit of the EPS control unit. Refer to STC-14, "DTC C1601 BATTERY VOLT".

Is the inspection result normal?

YES (Present error)>>Replace the EPS control unit. Refer to PS-9, "Removal and Installation".
YES (Past error)>>Error was detected in the EPS control unit branch line.
NO >> Repair the power supply and the ground circuit.

M&A BRANCH LINE CIRCUIT

Diagnosis Procedure

INFOID:0000000001711430

INSPECTION PROCEDURE

1. CHECK CONNECTOR

1. Turn the ignition switch OFF.
2. Disconnect the battery cable from the negative terminal.
3. Check the terminals and connectors of the combination meter for damage, bend and loose connection (unit side and connector side).

Is the inspection result normal?

YES >> GO TO 2.
NO >> Repair the terminal and connector.

2. CHECK HARNESS FOR OPEN CIRCUIT

1. Disconnect the connector of combination meter.
2. Check the resistance between the combination meter harness connector terminals.

Combination meter harness connector			Resistance (Ω)
Connector No.	Terminal No.		
M24	1	2	Approx. 54 – 66

Is the measurement value within the specification?

YES >> GO TO 3.
NO >> Repair the combination meter branch line.

3. CHECK POWER SUPPLY AND GROUND CIRCUIT

Check the power supply and the ground circuit of the combination meter. Refer to DI-15, "Power Supply and Ground Circuit Inspection".

Is the inspection result normal?

YES (Present error)>>Replace the combination meter. Refer to DI-20, "Removal and Installation".
YES (Past error)>>Error was detected in the combination meter branch line.
NO >> Repair the power supply and the ground circuit.

TCM BRANCH LINE CIRCUIT

Diagnosis Procedure

INFOID:0000000001711434

1.CHECK CONNECTOR

1. Turn the ignition switch OFF.
2. Disconnect the battery cable from the negative terminal.
3. Check the terminals and connector of the TCM for damage, bend and loose connection (unit side and connector side).

Is the inspection result normal?

YES >> GO TO 2.
NO >> Repair the terminal and connector.

2.CHECK HARNESS FOR OPEN CIRCUIT

1. Disconnect the connector of TCM.
2. Check the resistance between the TCM harness connector terminals.

TCM harness connector			Resistance (Ω)
Connector No.	Terminal No.		
E31	5	6	Approx. 54 – 66

Is the measurement value within the specification?

YES >> GO TO 3.
NO >> Repair the TCM branch line.

3.CHECK POWER SUPPLY AND GROUND CIRCUIT

Check the power supply and the ground circuit of the TCM. Refer to the following.
- A/T models: AT-165, "Diagnosis Procedure"
- CVT models: CVT-123, "Diagnosis Procedure"

Is the inspection result normal?

YES (Present error)>>Replace the TCM. Refer to the following.
- A/T models: AT-202, "Removal and Installation"
- CVT models: CVT-161, "Removal and Installation"

YES (Past error)>>Error was detected in the TCM branch line.
NO >> Repair the power supply and the ground circuit.

IPDM-E BRANCH LINE CIRCUIT

Diagnosis Procedure

INFOID:0000000001711435

INSPECTION PROCEDURE

1. CHECK CONNECTOR

1. Turn the ignition switch OFF.
2. Disconnect the battery cable from the negative terminal.
3. Check the following terminals and connectors for damage, bend and loose connection (unit side and connector side).

- IPDM E/R
- Harness connector E7 (Models without ABS)
- Harness connector M69 (Models without ABS)

Is the inspection result normal?

YES >> GO TO 2.
NO >> Repair the terminal and connector.

2. CHECK HARNESS FOR OPEN CIRCUIT

1. Disconnect the connector of IPDM E/R.
2. Check the resistance between the IPDM E/R harness connector terminals.

IPDM E/R harness connector			Resistance (Ω)
Connector No.	Terminal No.		
E46	41	40	Approx. 108 – 132

Is the measurement value within the specification?

YES >> GO TO 3.
NO >> Repair the IPDM E/R branch line.

3. CHECK POWER SUPPLY AND GROUND CIRCUIT

Check the power supply and the ground circuit of the IPDM E/R. Refer to PG-25, "IPDM E/R Power/Ground Circuit Inspection".

Is the inspection result normal?

YES (Present error)>>Replace the IPDM E/R. Refer to PG-26, "Removal and Installation of IPDM E/R".
YES (Past error)>>Error was detected in the IPDM E/R branch line.
NO >> Repair the power supply and the ground circuit.

CAN COMMUNICATION CIRCUIT

Diagnosis Procedure

INFOID:0000000001711436

INSPECTION PROCEDURE

1. CONNECTOR INSPECTION

1. Turn the ignition switch OFF.
2. Disconnect the battery cable from the negative terminal.
3. Disconnect all the unit connectors on CAN communication system.
4. Check terminals and connectors for damage, bend and loose connection.

Is the inspection result normal?

YES >> GO TO 2.
NO >> Repair the terminal and connector.

2. CHECK HARNESS CONTINUITY (SHORT CIRCUIT)

Check the continuity between the data link connector terminals.

Data link connector			Continuity
Connector No.	Terminal No.		
M22	6	14	Not existed

Is the inspection result normal?

YES >> GO TO 3.
NO >> Check the harness and repair the root cause.

3. CHECK HARNESS CONTINUITY (SHORT CIRCUIT)

Check the continuity between the data link connector and the ground.

Data link connector		Ground	Continuity
Connector No.	Terminal No.		
M22	6		Not existed
	14		Not existed

Is the inspection result normal?

YES >> GO TO 4.
NO >> Check the harness and repair the root cause.

4. CHECK ECM AND IPDM E/R TERMINATION CIRCUIT

1. Remove the ECM and the IPDM E/R.
2. Check the resistance between the ECM terminals.

ECM		Resistance (Ω)
Terminal No.		
84	83	Approx. 108 – 132

3. Check the resistance between the IPDM E/R terminals.

IPDM E/R		Resistance (Ω)
Terminal No.		
41	40	Approx. 108 – 132

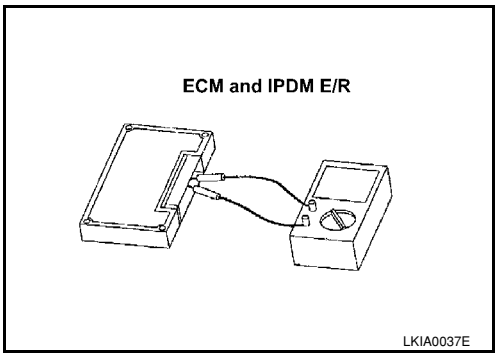

Is the measurement value within the specification?

YES >> GO TO 5.
NO >> Replace the ECM and/or the IPDM E/R.

5. CHECK SYMPTOM

Connect all the connectors. Check if the symptoms described in the “Symptom (Results from interview with customer)” are reproduced.

Inspection result

Reproduced>>GO TO 6.
Non-reproduced>>Start the diagnosis again. Follow the trouble diagnosis procedure when past error is detected.

6. CHECK UNIT REPRODUCTION

Perform the reproduction test as per the following procedure for each unit.

1. Turn the ignition switch OFF.
2. Disconnect the battery cable from the negative terminal.
3. Disconnect one of the unit connectors of CAN communication system.
   NOTE:
   ECM and IPDM E/R have a termination circuit. Check other units first.
4. Connect the battery cable to the negative terminal. Check if the symptoms described in the “Symptom (Results from interview with customer)” are reproduced.
   NOTE:
   Although unit-related error symptoms occur, do not confuse them with other symptoms.

Inspection result

Reproduced>>Connect the connector. Check other units as per the above procedure.
Non-reproduced>>Replace the unit whose connector was disconnected.

COMPONENT DIAGNOSIS

MAIN LINE BETWEEN DLC AND TCM CIRCUIT

Diagnosis Procedure

INFOID:0000000001711443

INSPECTION PROCEDURE

1.CHECK CONNECTOR

1. Turn the ignition switch OFF.
2. Disconnect the battery cable from the negative terminal.
3. Check the following terminals and connectors for damage, bend and loose connection (connector side and harness side).

- Harness connector M69
- Harness connector E7

Is the inspection result normal?

YES >> GO TO 2.
NO >> Repair the terminal and connector.

2.CHECK HARNESS CONTINUITY (OPEN CIRCUIT)

1. Disconnect the harness connectors M69 and E7.
2. Check the continuity between the data link connector and the harness connector.

Data link connector		Harness connector		Continuity
Connector No.	Terminal No.	Connector No.	Terminal No.	
M22	6	M69	32A	Existed
	14		31A	Existed

Is the inspection result normal?

YES >> GO TO 3.
NO >> Repair the main line between the data link connector and the harness connector M69.

3.CHECK HARNESS CONTINUITY (OPEN CIRCUIT)

1. Disconnect the connector of TCM.
2. Check the continuity between the harness connector and the TCM.

Harness connector		TCM harness connector		Continuity
Connector No.	Terminal No.	Connector No.	Terminal No.	
E7	32A	E31	5	Existed
	31A		6	Existed

Is the inspection result normal?

YES (Present error)>>Check CAN system type decision again.
YES (Past error)>>Error was detected in the main line between the data link connector and the TCM.
NO >> Repair the main line between the harness connector E7 and the TCM.

ECM BRANCH LINE CIRCUIT

Diagnosis Procedure

INFOID:0000000001711445

1.CHECK CONNECTOR

1. Turn the ignition switch OFF.
2. Disconnect the battery cable from the negative terminal.
3. Check the following terminals and connectors for damage, bend and loose connection (unit side and connector side).

- ECM
- Harness connector E7
- Harness connector M69

Is the inspection result normal?

YES >> GO TO 2.
NO >> Repair the terminal and connector.

2.CHECK HARNESS FOR OPEN CIRCUIT

1. Disconnect the connector of ECM.
2. Check the resistance between the ECM harness connector terminals.

ECM harness connector			Resistance (Ω)
Connector No.	Terminal No.		
E16	84	83	Approx. 108 – 132

Is the measurement value within the specification?

YES >> GO TO 3.
NO >> Repair the ECM branch line.

3.CHECK POWER SUPPLY AND GROUND CIRCUIT

Check the power supply and the ground circuit of the ECM. Refer to EC-138, "Diagnosis Procedure".

Is the inspection result normal?

YES (Present error)>>Replace the ECM. Refer to EC-75, "Procedure After Replacing ECM".
YES (Past error)>>Error was detected in the ECM branch line.
NO >> Repair the power supply and the ground circuit.

BCM BRANCH LINE CIRCUIT

Diagnosis Procedure

INFOID:0000000001711446

1.CHECK CONNECTOR

1. Turn the ignition switch OFF.
2. Disconnect the battery cable from the negative terminal.
3. Check the terminals and connectors of the BCM for damage, bend and loose connection (unit side and connector side).

Is the inspection result normal?

YES >> GO TO 2.
NO >> Repair the terminal and connector.

2.CHECK HARNESS FOR OPEN CIRCUIT

1. Disconnect the connector of BCM.
2. Check the resistance between the BCM harness connector terminals.

BCM harness connector			Resistance (Ω)
Connector No.	Terminal No.		
M18	39	40	Approx. 54 – 66

Is the measurement value within the specification?

YES >> GO TO 3.
NO >> Repair the BCM branch line.

3.CHECK POWER SUPPLY AND GROUND CIRCUIT

Check the power supply and the ground circuit of the BCM. Refer to BCS-15, "BCM Power Supply and Ground Circuit Inspection".

Is the inspection result normal?

YES (Present error)>>Replace the BCM. Refer to BCS-18, "Removal and Installation of BCM".
YES (Past error)>>Error was detected in the BCM branch line.
NO >> Repair the power supply and the ground circuit.

DLC BRANCH LINE CIRCUIT

Diagnosis Procedure

INFOID:0000000001711447

INSPECTION PROCEDURE

1. CHECK CONNECTOR

1. Turn the ignition switch OFF.
2. Disconnect the battery cable from the negative terminal.
3. Check the terminals and connectors of the data link connector for damage, bend and loose connection (connector side and harness side).

Is the inspection result normal?

YES >> GO TO 2.
NO >> Repair the terminal and connector.

2. CHECK HARNESS FOR OPEN CIRCUIT

Check the resistance between the data link connector terminals.

Data link connector			Resistance (Ω)
Connector No.	Terminal No.		
M22	6	14	Approx. 54 – 66

Is the measurement value within the specification?

YES (Present error)>>Check the CAN system type decision again.
YES (Past error)>>Error was detected in the data link connector branch line circuit.
NO >> Repair the data link connector branch line.

EPS BRANCH LINE CIRCUIT

Diagnosis Procedure

INFOID:0000000001711448

INSPECTION PROCEDURE

1.CHECK CONNECTOR

1. Turn the ignition switch OFF.
2. Disconnect the battery cable from the negative terminal.
3. Check the terminals and connectors of the EPS control unit for damage, bend and loose connection (unit side and connector side).

Is the inspection result normal?

YES >> GO TO 2.
NO >> Repair the terminal and connector.

2.CHECK HARNESS FOR OPEN CIRCUIT

1. Disconnect the connector of EPS control unit.
2. Check the resistance between the EPS control unit harness connector terminals.

EPS control unit harness connector			Resistance (Ω)
Connector No.	Terminal No.		
M53	9	16	Approx. 54 – 66

Is the measurement value within the specification?

YES >> GO TO 3.
NO >> Repair the EPS control unit branch line.

3.CHECK POWER SUPPLY AND GROUND CIRCUIT

Check the power supply and the ground circuit of the EPS control unit. Refer to STC-14, "DTC C1601 BATTERY VOLT".

Is the inspection result normal?

YES (Present error)>>Replace the EPS control unit. Refer to PS-9, "Removal and Installation".
YES (Past error)>>Error was detected in the EPS control unit branch line.
NO >> Repair the power supply and the ground circuit.

M&A BRANCH LINE CIRCUIT

Diagnosis Procedure

INFOID:0000000001711450

INSPECTION PROCEDURE

1.CHECK CONNECTOR

1. Turn the ignition switch OFF.
2. Disconnect the battery cable from the negative terminal.
3. Check the terminals and connectors of the combination meter for damage, bend and loose connection (unit side and connector side).

Is the inspection result normal?

YES >> GO TO 2.
NO >> Repair the terminal and connector.

2.CHECK HARNESS FOR OPEN CIRCUIT

1. Disconnect the connector of combination meter.
2. Check the resistance between the combination meter harness connector terminals.

Combination meter harness connector			Resistance (Ω)
Connector No.	Terminal No.		
M24	1	2	Approx. 54 – 66

Is the measurement value within the specification?

YES >> GO TO 3.
NO >> Repair the combination meter branch line.

3.CHECK POWER SUPPLY AND GROUND CIRCUIT

Check the power supply and the ground circuit of the combination meter. Refer to DI-15, "Power Supply and Ground Circuit Inspection".

Is the inspection result normal?

YES (Present error)>>Replace the combination meter. Refer to DI-20, "Removal and Installation".
YES (Past error)>>Error was detected in the combination meter branch line.
NO >> Repair the power supply and the ground circuit.

ABS BRANCH LINE CIRCUIT

Diagnosis Procedure

INFOID:0000000001711453

1. CHECK CONNECTOR

1. Turn the ignition switch OFF.
2. Disconnect the battery cable from the negative terminal.
3. Check the terminals and connectors of the ABS actuator and electric unit (control unit) for damage, bend and loose connection (unit side and connector side).

Is the inspection result normal?

YES >> GO TO 2.
NO >> Repair the terminal and connector.

2. CHECK HARNESS FOR OPEN CIRCUIT

1. Disconnect the connector of ABS actuator and electric unit (control unit).
2. Check the resistance between the ABS actuator and electric unit (control unit) harness connector terminals.

ABS actuator and electric unit (control unit) harness connector			Resistance (Ω)
Connector No.	Terminal No.		
E33	26	15	Approx. 54 – 66

Is the measurement value within the specification?

YES >> GO TO 3.
NO >> Repair the ABS actuator and electric unit (control unit) branch line.

3. CHECK POWER SUPPLY AND GROUND CIRCUIT

Check the power supply and the ground circuit of the ABS actuator and electric unit (control unit). Refer to BRC-27, "ABS Control Unit Power and Ground Systems Inspection".

Is the inspection result normal?

YES (Present error)>>Replace the ABS actuator and electric unit (control unit). Refer to BRC-35, "Removal and Installation".
YES (Past error)>>Error was detected in the ABS actuator and electric unit (control unit) branch line.
NO >> Repair the power supply and the ground circuit.

TCM BRANCH LINE CIRCUIT

Diagnosis Procedure

INFOID:0000000001711454

1. CHECK CONNECTOR

1. Turn the ignition switch OFF.
2. Disconnect the battery cable from the negative terminal.
3. Check the terminals and connector of the TCM for damage, bend and loose connection (unit side and connector side).

Is the inspection result normal?

YES >> GO TO 2.
NO >> Repair the terminal and connector.

2. CHECK HARNESS FOR OPEN CIRCUIT

1. Disconnect the connector of TCM.
2. Check the resistance between the TCM harness connector terminals.

TCM harness connector			Resistance (Ω)
Connector No.	Terminal No.		
E31	5	6	Approx. 54 – 66

Is the measurement value within the specification?

YES >> GO TO 3.
NO >> Repair the TCM branch line.

3. CHECK POWER SUPPLY AND GROUND CIRCUIT

Check the power supply and the ground circuit of the TCM. Refer to the following.
- A/T models: AT-165, "Diagnosis Procedure"
- CVT models: CVT-123, "Diagnosis Procedure"

Is the inspection result normal?

YES (Present error)>>Replace the TCM. Refer to the following.
- A/T models: AT-202, "Removal and Installation"
- CVT models: CVT-161, "Removal and Installation"

YES (Past error)>>Error was detected in the TCM branch line.
NO >> Repair the power supply and the ground circuit.

IPDM-E BRANCH LINE CIRCUIT

Diagnosis Procedure

INFOID:0000000001711455

INSPECTION PROCEDURE

1.CHECK CONNECTOR

1. Turn the ignition switch OFF.
2. Disconnect the battery cable from the negative terminal.
3. Check the following terminals and connectors for damage, bend and loose connection (unit side and connector side).

- IPDM E/R
- Harness connector E7 (Models without ABS)
- Harness connector M69 (Models without ABS)

Is the inspection result normal?

YES >> GO TO 2.
NO >> Repair the terminal and connector.

2.CHECK HARNESS FOR OPEN CIRCUIT

1. Disconnect the connector of IPDM E/R.
2. Check the resistance between the IPDM E/R harness connector terminals.

IPDM E/R harness connector			Resistance (Ω)
Connector No.	Terminal No.		
E46	41	40	Approx. 108 – 132

Is the measurement value within the specification?

YES >> GO TO 3.
NO >> Repair the IPDM E/R branch line.

3.CHECK POWER SUPPLY AND GROUND CIRCUIT

Check the power supply and the ground circuit of the IPDM E/R. Refer to PG-25, "IPDM E/R Power/Ground Circuit Inspection".

Is the inspection result normal?

YES (Present error)>>Replace the IPDM E/R. Refer to PG-26, "Removal and Installation of IPDM E/R".
YES (Past error)>>Error was detected in the IPDM E/R branch line.
NO >> Repair the power supply and the ground circuit.

CAN COMMUNICATION CIRCUIT

Diagnosis Procedure

INFOID:0000000001711456

INSPECTION PROCEDURE

1. CONNECTOR INSPECTION

1. Turn the ignition switch OFF.
2. Disconnect the battery cable from the negative terminal.
3. Disconnect all the unit connectors on CAN communication system.
4. Check terminals and connectors for damage, bend and loose connection.

Is the inspection result normal?

YES >> GO TO 2.
NO >> Repair the terminal and connector.

2. CHECK HARNESS CONTINUITY (SHORT CIRCUIT)

Check the continuity between the data link connector terminals.

Data link connector			Continuity
Connector No.	Terminal No.		
M22	6	14	Not existed

Is the inspection result normal?

YES >> GO TO 3.
NO >> Check the harness and repair the root cause.

3. CHECK HARNESS CONTINUITY (SHORT CIRCUIT)

Check the continuity between the data link connector and the ground.

Data link connector		Ground	Continuity
Connector No.	Terminal No.		
M22	6		Not existed
	14		Not existed

Is the inspection result normal?

YES >> GO TO 4.
NO >> Check the harness and repair the root cause.

4. CHECK ECM AND IPDM E/R TERMINATION CIRCUIT

1. Remove the ECM and the IPDM E/R.
2. Check the resistance between the ECM terminals.

ECM		Resistance (Ω)
Terminal No.		
84	83	Approx. 108 – 132

3. Check the resistance between the IPDM E/R terminals.

IPDM E/R		Resistance (Ω)
Terminal No.		
41	40	Approx. 108 – 132

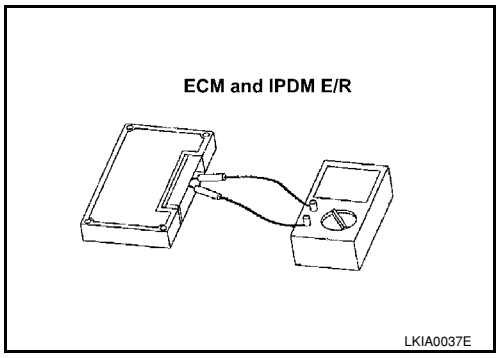

Is the measurement value within the specification?

YES >> GO TO 5.
NO >> Replace the ECM and/or the IPDM E/R.

5. CHECK SYMPTOM

Connect all the connectors. Check if the symptoms described in the “Symptom (Results from interview with customer)” are reproduced.

Inspection result

Reproduced>>GO TO 6.
Non-reproduced>>Start the diagnosis again. Follow the trouble diagnosis procedure when past error is detected.

6.CHECK UNIT REPRODUCTION

Perform the reproduction test as per the following procedure for each unit.

1. Turn the ignition switch OFF.
2. Disconnect the battery cable from the negative terminal.
3. Disconnect one of the unit connectors of CAN communication system.
   NOTE:
   ECM and IPDM E/R have a termination circuit. Check other units first.
4. Connect the battery cable to the negative terminal. Check if the symptoms described in the “Symptom (Results from interview with customer)” are reproduced.
   NOTE:
   Although unit-related error symptoms occur, do not confuse them with other symptoms.

Inspection result

Reproduced>>Connect the connector. Check other units as per the above procedure.
Non-reproduced>>Replace the unit whose connector was disconnected.

COMPONENT DIAGNOSIS

MAIN LINE BETWEEN DLC AND TCM CIRCUIT

Diagnosis Procedure

INFOID:0000000001711463

INSPECTION PROCEDURE

1. CHECK CONNECTOR

1. Turn the ignition switch OFF.
2. Disconnect the battery cable from the negative terminal.
3. Check the following terminals and connectors for damage, bend and loose connection (connector side and harness side).

- Harness connector M69
- Harness connector E7

Is the inspection result normal?

YES >> GO TO 2.
NO >> Repair the terminal and connector.

2. CHECK HARNESS CONTINUITY (OPEN CIRCUIT)

1. Disconnect the harness connectors M69 and E7.
2. Check the continuity between the data link connector and the harness connector.

Data link connector		Harness connector		Continuity
Connector No.	Terminal No.	Connector No.	Terminal No.	
M22	6	M69	32A	Existed
	14		31A	Existed

Is the inspection result normal?

YES >> GO TO 3.
NO >> Repair the main line between the data link connector and the harness connector M69.

3. CHECK HARNESS CONTINUITY (OPEN CIRCUIT)

1. Disconnect the connector of TCM.
2. Check the continuity between the harness connector and the TCM.

Harness connector		TCM harness connector		Continuity
Connector No.	Terminal No.	Connector No.	Terminal No.	
E7	32A	E31	5	Existed
	31A		6	Existed

Is the inspection result normal?

YES (Present error)>>Check CAN system type decision again.
YES (Past error)>>Error was detected in the main line between the data link connector and the TCM.
NO >> Repair the main line between the harness connector E7 and the TCM.

ECM BRANCH LINE CIRCUIT

Diagnosis Procedure

INFOID:0000000001711465

1.CHECK CONNECTOR

1. Turn the ignition switch OFF.
2. Disconnect the battery cable from the negative terminal.
3. Check the following terminals and connectors for damage, bend and loose connection (unit side and connector side).

- ECM
- Harness connector E7
- Harness connector M69

Is the inspection result normal?

YES >> GO TO 2.
NO >> Repair the terminal and connector.

2.CHECK HARNESS FOR OPEN CIRCUIT

1. Disconnect the connector of ECM.
2. Check the resistance between the ECM harness connector terminals.

ECM harness connector			Resistance (Ω)
Connector No.	Terminal No.		
E16	84	83	Approx. 108 – 132

Is the measurement value within the specification?

YES >> GO TO 3.
NO >> Repair the ECM branch line.

3.CHECK POWER SUPPLY AND GROUND CIRCUIT

Check the power supply and the ground circuit of the ECM. Refer to EC-138, "Diagnosis Procedure".

Is the inspection result normal?

YES (Present error)>>Replace the ECM. Refer to EC-75, "Procedure After Replacing ECM".
YES (Past error)>>Error was detected in the ECM branch line.
NO >> Repair the power supply and the ground circuit.

BCM BRANCH LINE CIRCUIT

Diagnosis Procedure

INFOID:0000000001711466

1.CHECK CONNECTOR

1. Turn the ignition switch OFF.
2. Disconnect the battery cable from the negative terminal.
3. Check the terminals and connectors of the BCM for damage, bend and loose connection (unit side and connector side).

Is the inspection result normal?

YES >> GO TO 2.
NO >> Repair the terminal and connector.

2.CHECK HARNESS FOR OPEN CIRCUIT

1. Disconnect the connector of BCM.
2. Check the resistance between the BCM harness connector terminals.

BCM harness connector			Resistance (Ω)
Connector No.	Terminal No.		
M18	39	40	Approx. 54 – 66

Is the measurement value within the specification?

YES >> GO TO 3.
NO >> Repair the BCM branch line.

3.CHECK POWER SUPPLY AND GROUND CIRCUIT

Check the power supply and the ground circuit of the BCM. Refer to BCS-15, "BCM Power Supply and Ground Circuit Inspection".

Is the inspection result normal?

YES (Present error)>>Replace the BCM. Refer to BCS-18, "Removal and Installation of BCM".
YES (Past error)>>Error was detected in the BCM branch line.
NO >> Repair the power supply and the ground circuit.

DLC BRANCH LINE CIRCUIT

Diagnosis Procedure

INFOID:0000000001711467

INSPECTION PROCEDURE

1.CHECK CONNECTOR

1. Turn the ignition switch OFF.
2. Disconnect the battery cable from the negative terminal.
3. Check the terminals and connectors of the data link connector for damage, bend and loose connection (connector side and harness side).

Is the inspection result normal?

YES >> GO TO 2.
NO >> Repair the terminal and connector.

2.CHECK HARNESS FOR OPEN CIRCUIT

Check the resistance between the data link connector terminals.

Data link connector			Resistance (Ω)
Connector No.	Terminal No.		
M22	6	14	Approx. 54 – 66

Is the measurement value within the specification?

YES (Present error)>>Check the CAN system type decision again.
YES (Past error)>>Error was detected in the data link connector branch line circuit.
NO >> Repair the data link connector branch line.

EPS BRANCH LINE CIRCUIT

Diagnosis Procedure

INFOID:0000000001711468

INSPECTION PROCEDURE

1. CHECK CONNECTOR

1. Turn the ignition switch OFF.
2. Disconnect the battery cable from the negative terminal.
3. Check the terminals and connectors of the EPS control unit for damage, bend and loose connection (unit side and connector side).

Is the inspection result normal?

YES >> GO TO 2.
NO >> Repair the terminal and connector.

2. CHECK HARNESS FOR OPEN CIRCUIT

1. Disconnect the connector of EPS control unit.
2. Check the resistance between the EPS control unit harness connector terminals.

EPS control unit harness connector			Resistance (Ω)
Connector No.	Terminal No.		
M53	9	16	Approx. 54 – 66

Is the measurement value within the specification?

YES >> GO TO 3.
NO >> Repair the EPS control unit branch line.

3. CHECK POWER SUPPLY AND GROUND CIRCUIT

Check the power supply and the ground circuit of the EPS control unit. Refer to STC-14, "DTC C1601 BATTERY VOLT".

Is the inspection result normal?

YES (Present error)>>Replace the EPS control unit. Refer to PS-9, "Removal and Installation".
YES (Past error)>>Error was detected in the EPS control unit branch line.
NO >> Repair the power supply and the ground circuit.

M&A BRANCH LINE CIRCUIT

Diagnosis Procedure

INFOID:0000000001711470

INSPECTION PROCEDURE

1.CHECK CONNECTOR

1. Turn the ignition switch OFF.
2. Disconnect the battery cable from the negative terminal.
3. Check the terminals and connectors of the combination meter for damage, bend and loose connection (unit side and connector side).

Is the inspection result normal?

YES >> GO TO 2.
NO >> Repair the terminal and connector.

2.CHECK HARNESS FOR OPEN CIRCUIT

1. Disconnect the connector of combination meter.
2. Check the resistance between the combination meter harness connector terminals.

Combination meter harness connector			Resistance (Ω)
Connector No.	Terminal No.		
M24	1	2	Approx. 54 – 66

Is the measurement value within the specification?

YES >> GO TO 3.
NO >> Repair the combination meter branch line.

3.CHECK POWER SUPPLY AND GROUND CIRCUIT

Check the power supply and the ground circuit of the combination meter. Refer to DI-15, "Power Supply and Ground Circuit Inspection".

Is the inspection result normal?

YES (Present error)>>Replace the combination meter. Refer to DI-20, "Removal and Installation".
YES (Past error)>>Error was detected in the combination meter branch line.
NO >> Repair the power supply and the ground circuit.

TCM BRANCH LINE CIRCUIT

Diagnosis Procedure

INFOID:0000000001711474

1. CHECK CONNECTOR

1. Turn the ignition switch OFF.
2. Disconnect the battery cable from the negative terminal.
3. Check the terminals and connector of the TCM for damage, bend and loose connection (unit side and connector side).

Is the inspection result normal?

YES >> GO TO 2.
NO >> Repair the terminal and connector.

2. CHECK HARNESS FOR OPEN CIRCUIT

1. Disconnect the connector of TCM.
2. Check the resistance between the TCM harness connector terminals.

TCM harness connector			Resistance (Ω)
Connector No.	Terminal No.		
E31	5	6	Approx. 54 – 66

Is the measurement value within the specification?

YES >> GO TO 3.
NO >> Repair the TCM branch line.

3. CHECK POWER SUPPLY AND GROUND CIRCUIT

Check the power supply and the ground circuit of the TCM. Refer to the following.
- A/T models: AT-165, "Diagnosis Procedure"
- CVT models: CVT-123, "Diagnosis Procedure"

Is the inspection result normal?

YES (Present error)>>Replace the TCM. Refer to the following.
- A/T models: AT-202, "Removal and Installation"
- CVT models: CVT-161, "Removal and Installation"

YES (Past error)>>Error was detected in the TCM branch line.
NO >> Repair the power supply and the ground circuit.

IPDM-E BRANCH LINE CIRCUIT

Diagnosis Procedure

INFOID:0000000001711475

INSPECTION PROCEDURE

1.CHECK CONNECTOR

1. Turn the ignition switch OFF.
2. Disconnect the battery cable from the negative terminal.
3. Check the following terminals and connectors for damage, bend and loose connection (unit side and connector side).

- IPDM E/R
- Harness connector E7 (Models without ABS)
- Harness connector M69 (Models without ABS)

Is the inspection result normal?

YES >> GO TO 2.
NO >> Repair the terminal and connector.

2.CHECK HARNESS FOR OPEN CIRCUIT

1. Disconnect the connector of IPDM E/R.
2. Check the resistance between the IPDM E/R harness connector terminals.

IPDM E/R harness connector			Resistance (Ω)
Connector No.	Terminal No.		
E46	41	40	Approx. 108 – 132

Is the measurement value within the specification?

YES >> GO TO 3.
NO >> Repair the IPDM E/R branch line.

3.CHECK POWER SUPPLY AND GROUND CIRCUIT

Check the power supply and the ground circuit of the IPDM E/R. Refer to PG-25, "IPDM E/R Power/Ground Circuit Inspection".

Is the inspection result normal?

YES (Present error)>>Replace the IPDM E/R. Refer to PG-26, "Removal and Installation of IPDM E/R".
YES (Past error)>>Error was detected in the IPDM E/R branch line.
NO >> Repair the power supply and the ground circuit.

CAN COMMUNICATION CIRCUIT

Diagnosis Procedure

INFOID:0000000001711476

INSPECTION PROCEDURE

1. CONNECTOR INSPECTION

1. Turn the ignition switch OFF.
2. Disconnect the battery cable from the negative terminal.
3. Disconnect all the unit connectors on CAN communication system.
4. Check terminals and connectors for damage, bend and loose connection.

Is the inspection result normal?

YES >> GO TO 2.
NO >> Repair the terminal and connector.

2. CHECK HARNESS CONTINUITY (SHORT CIRCUIT)

Check the continuity between the data link connector terminals.

Data link connector			Continuity
Connector No.	Terminal No.		
M22	6	14	Not existed

Is the inspection result normal?

YES >> GO TO 3.
NO >> Check the harness and repair the root cause.

3. CHECK HARNESS CONTINUITY (SHORT CIRCUIT)

Check the continuity between the data link connector and the ground.

Data link connector		Ground	Continuity
Connector No.	Terminal No.		
M22	6		Not existed
	14		Not existed

Is the inspection result normal?

YES >> GO TO 4.
NO >> Check the harness and repair the root cause.

4. CHECK ECM AND IPDM E/R TERMINATION CIRCUIT

1. Remove the ECM and the IPDM E/R.
2. Check the resistance between the ECM terminals.

ECM		Resistance (Ω)
Terminal No.		
84	83	Approx. 108 – 132

3. Check the resistance between the IPDM E/R terminals.

IPDM E/R		Resistance (Ω)
Terminal No.		
41	40	Approx. 108 – 132

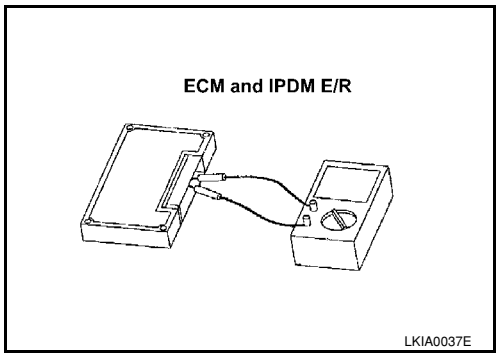

Is the measurement value within the specification?

YES >> GO TO 5.
NO >> Replace the ECM and/or the IPDM E/R.

5. CHECK SYMPTOM

Connect all the connectors. Check if the symptoms described in the “Symptom (Results from interview with customer)” are reproduced.

Inspection result

Reproduced>>GO TO 6.
Non-reproduced>>Start the diagnosis again. Follow the trouble diagnosis procedure when past error is detected.

6. CHECK UNIT REPRODUCTION

Perform the reproduction test as per the following procedure for each unit.

1. Turn the ignition switch OFF.
2. Disconnect the battery cable from the negative terminal.
3. Disconnect one of the unit connectors of CAN communication system.
   NOTE:
   ECM and IPDM E/R have a termination circuit. Check other units first.
4. Connect the battery cable to the negative terminal. Check if the symptoms described in the “Symptom (Results from interview with customer)” are reproduced.
   NOTE:
   Although unit-related error symptoms occur, do not confuse them with other symptoms.

Inspection result

Reproduced>>Connect the connector. Check other units as per the above procedure.
Non-reproduced>>Replace the unit whose connector was disconnected.

COMPONENT DIAGNOSIS

MAIN LINE BETWEEN DLC AND TCM CIRCUIT

Diagnosis Procedure

INFOID:0000000001711483

INSPECTION PROCEDURE

1. CHECK CONNECTOR

1. Turn the ignition switch OFF.
2. Disconnect the battery cable from the negative terminal.
3. Check the following terminals and connectors for damage, bend and loose connection (connector side and harness side).

- Harness connector M69
- Harness connector E7

Is the inspection result normal?

YES >> GO TO 2.
NO >> Repair the terminal and connector.

2. CHECK HARNESS CONTINUITY (OPEN CIRCUIT)

1. Disconnect the harness connectors M69 and E7.
2. Check the continuity between the data link connector and the harness connector.

Data link connector		Harness connector		Continuity
Connector No.	Terminal No.	Connector No.	Terminal No.	
M22	6	M69	32A	Existed
	14		31A	Existed

Is the inspection result normal?

YES >> GO TO 3.
NO >> Repair the main line between the data link connector and the harness connector M69.

3. CHECK HARNESS CONTINUITY (OPEN CIRCUIT)

1. Disconnect the connector of TCM.
2. Check the continuity between the harness connector and the TCM.

Harness connector		TCM harness connector		Continuity
Connector No.	Terminal No.	Connector No.	Terminal No.	
E7	32A	E31	5	Existed
	31A		6	Existed

Is the inspection result normal?

YES (Present error)>>Check CAN system type decision again.
YES (Past error)>>Error was detected in the main line between the data link connector and the TCM.
NO >> Repair the main line between the harness connector E7 and the TCM.

ECM BRANCH LINE CIRCUIT

Diagnosis Procedure

INFOID:0000000001711485

1.CHECK CONNECTOR

1. Turn the ignition switch OFF.
2. Disconnect the battery cable from the negative terminal.
3. Check the following terminals and connectors for damage, bend and loose connection (unit side and connector side).

- ECM
- Harness connector E7
- Harness connector M69

Is the inspection result normal?

YES >> GO TO 2.
NO >> Repair the terminal and connector.

2.CHECK HARNESS FOR OPEN CIRCUIT

1. Disconnect the connector of ECM.
2. Check the resistance between the ECM harness connector terminals.

ECM harness connector			Resistance (Ω)
Connector No.	Terminal No.		
E16	84	83	Approx. 108 – 132

Is the measurement value within the specification?

YES >> GO TO 3.
NO >> Repair the ECM branch line.

3.CHECK POWER SUPPLY AND GROUND CIRCUIT

Check the power supply and the ground circuit of the ECM. Refer to EC-138, "Diagnosis Procedure".

Is the inspection result normal?

YES (Present error)>>Replace the ECM. Refer to EC-75, "Procedure After Replacing ECM".
YES (Past error)>>Error was detected in the ECM branch line.
NO >> Repair the power supply and the ground circuit.

BCM BRANCH LINE CIRCUIT

Diagnosis Procedure

INFOID:0000000001711486

1.CHECK CONNECTOR

1. Turn the ignition switch OFF.
2. Disconnect the battery cable from the negative terminal.
3. Check the terminals and connectors of the BCM for damage, bend and loose connection (unit side and connector side).

Is the inspection result normal?

YES >> GO TO 2.
NO >> Repair the terminal and connector.

2.CHECK HARNESS FOR OPEN CIRCUIT

1. Disconnect the connector of BCM.
2. Check the resistance between the BCM harness connector terminals.

BCM harness connector			Resistance (Ω)
Connector No.	Terminal No.		
M18	39	40	Approx. 54 – 66

Is the measurement value within the specification?

YES >> GO TO 3.
NO >> Repair the BCM branch line.

3.CHECK POWER SUPPLY AND GROUND CIRCUIT

Check the power supply and the ground circuit of the BCM. Refer to BCS-15, "BCM Power Supply and Ground Circuit Inspection".

Is the inspection result normal?

YES (Present error)>>Replace the BCM. Refer to BCS-18, "Removal and Installation of BCM".
YES (Past error)>>Error was detected in the BCM branch line.
NO >> Repair the power supply and the ground circuit.

DLC BRANCH LINE CIRCUIT

Diagnosis Procedure

INFOID:0000000001711487

INSPECTION PROCEDURE

1.CHECK CONNECTOR

1. Turn the ignition switch OFF.
2. Disconnect the battery cable from the negative terminal.
3. Check the terminals and connectors of the data link connector for damage, bend and loose connection (connector side and harness side).

Is the inspection result normal?

YES >> GO TO 2.
NO >> Repair the terminal and connector.

2.CHECK HARNESS FOR OPEN CIRCUIT

Check the resistance between the data link connector terminals.

Data link connector			Resistance (Ω)
Connector No.	Terminal No.		
M22	6	14	Approx. 54 – 66

Is the measurement value within the specification?

YES (Present error)>>Check the CAN system type decision again.
YES (Past error)>>Error was detected in the data link connector branch line circuit.
NO >> Repair the data link connector branch line.

EPS BRANCH LINE CIRCUIT

Diagnosis Procedure

INFOID:0000000001711488

INSPECTION PROCEDURE

1. CHECK CONNECTOR

1. Turn the ignition switch OFF.
2. Disconnect the battery cable from the negative terminal.
3. Check the terminals and connectors of the EPS control unit for damage, bend and loose connection (unit side and connector side).

Is the inspection result normal?

YES >> GO TO 2.
NO >> Repair the terminal and connector.

2. CHECK HARNESS FOR OPEN CIRCUIT

1. Disconnect the connector of EPS control unit.
2. Check the resistance between the EPS control unit harness connector terminals.

EPS control unit harness connector			Resistance (Ω)
Connector No.	Terminal No.		
M53	9	16	Approx. 54 – 66

Is the measurement value within the specification?

YES >> GO TO 3.
NO >> Repair the EPS control unit branch line.

3. CHECK POWER SUPPLY AND GROUND CIRCUIT

Check the power supply and the ground circuit of the EPS control unit. Refer to STC-14, "DTC C1601 BATTERY VOLT".

Is the inspection result normal?

YES (Present error)>>Replace the EPS control unit. Refer to PS-9, "Removal and Installation".
YES (Past error)>>Error was detected in the EPS control unit branch line.
NO >> Repair the power supply and the ground circuit.

I-KEY BRANCH LINE CIRCUIT

Diagnosis Procedure

INFOID:0000000001711489

INSPECTION PROCEDURE

1.CHECK CONNECTOR

1. Turn the ignition switch OFF.
2. Disconnect the battery cable from the negative terminal.
3. Check the terminals and connectors of the Intelligent Key unit for damage, bend and loose connection (unit side and connector side).

Is the inspection result normal?

YES >> GO TO 2.
NO >> Repair the terminal and connector.

2.CHECK HARNESS FOR OPEN CIRCUIT

1. Disconnect the connector of Intelligent Key unit.
2. Check the resistance between the Intelligent Key unit harness connector terminals.

Intelligent Key unit harness connector			Resistance (Ω)
Connector No.	Terminal No.		
M52	2	3	Approx. 54 – 66

Is the measurement value within the specification?

YES >> GO TO 3.
NO >> Repair the Intelligent Key unit branch line.

3.CHECK POWER SUPPLY AND GROUND CIRCUIT

Check the power supply and the ground circuit of the Intelligent Key unit. Refer to BL-110, "Power Supply and Ground Circuit Inspection".

Is the inspection result normal?

YES (Present error)>>Replace the Intelligent Key unit. Refer to BL-142, "Removal and Installation of Intelligent Key Unit".
YES (Past error)>>Error was detected in the Intelligent Key unit branch line.
NO >> Repair the power supply and the ground circuit.

M&A BRANCH LINE CIRCUIT

Diagnosis Procedure

INFOID:0000000001711490

INSPECTION PROCEDURE

1.CHECK CONNECTOR

1. Turn the ignition switch OFF.
2. Disconnect the battery cable from the negative terminal.
3. Check the terminals and connectors of the combination meter for damage, bend and loose connection (unit side and connector side).

Is the inspection result normal?

YES >> GO TO 2.
NO >> Repair the terminal and connector.

2.CHECK HARNESS FOR OPEN CIRCUIT

1. Disconnect the connector of combination meter.
2. Check the resistance between the combination meter harness connector terminals.

Combination meter harness connector			Resistance (Ω)
Connector No.	Terminal No.		
M24	1	2	Approx. 54 – 66

Is the measurement value within the specification?

YES >> GO TO 3.
NO >> Repair the combination meter branch line.

3.CHECK POWER SUPPLY AND GROUND CIRCUIT

Check the power supply and the ground circuit of the combination meter. Refer to DI-15, "Power Supply and Ground Circuit Inspection".

Is the inspection result normal?

YES (Present error)>>Replace the combination meter. Refer to DI-20, "Removal and Installation".
YES (Past error)>>Error was detected in the combination meter branch line.
NO >> Repair the power supply and the ground circuit.

TCM BRANCH LINE CIRCUIT

Diagnosis Procedure

INFOID:0000000001711494

1.CHECK CONNECTOR

1. Turn the ignition switch OFF.
2. Disconnect the battery cable from the negative terminal.
3. Check the terminals and connector of the TCM for damage, bend and loose connection (unit side and connector side).

Is the inspection result normal?

YES >> GO TO 2.
NO >> Repair the terminal and connector.

2.CHECK HARNESS FOR OPEN CIRCUIT

1. Disconnect the connector of TCM.
2. Check the resistance between the TCM harness connector terminals.

TCM harness connector			Resistance (Ω)
Connector No.	Terminal No.		
E31	5	6	Approx. 54 – 66

Is the measurement value within the specification?

YES >> GO TO 3.
NO >> Repair the TCM branch line.

3.CHECK POWER SUPPLY AND GROUND CIRCUIT

Check the power supply and the ground circuit of the TCM. Refer to the following.
- A/T models: AT-165, "Diagnosis Procedure"
- CVT models: CVT-123, "Diagnosis Procedure"

Is the inspection result normal?

YES (Present error)>>Replace the TCM. Refer to the following.
- A/T models: AT-202, "Removal and Installation"
- CVT models: CVT-161, "Removal and Installation"

YES (Past error)>>Error was detected in the TCM branch line.
NO >> Repair the power supply and the ground circuit.

IPDM-E BRANCH LINE CIRCUIT

Diagnosis Procedure

INFOID:0000000001711495

INSPECTION PROCEDURE

1. CHECK CONNECTOR

1. Turn the ignition switch OFF.
2. Disconnect the battery cable from the negative terminal.
3. Check the following terminals and connectors for damage, bend and loose connection (unit side and connector side).

- IPDM E/R
- Harness connector E7 (Models without ABS)
- Harness connector M69 (Models without ABS)

Is the inspection result normal?

YES >> GO TO 2.
NO >> Repair the terminal and connector.

2. CHECK HARNESS FOR OPEN CIRCUIT

1. Disconnect the connector of IPDM E/R.
2. Check the resistance between the IPDM E/R harness connector terminals.

IPDM E/R harness connector			Resistance (Ω)
Connector No.	Terminal No.		
E46	41	40	Approx. 108 – 132

Is the measurement value within the specification?

YES >> GO TO 3.
NO >> Repair the IPDM E/R branch line.

3. CHECK POWER SUPPLY AND GROUND CIRCUIT

Check the power supply and the ground circuit of the IPDM E/R. Refer to PG-25, "IPDM E/R Power/Ground Circuit Inspection".

Is the inspection result normal?

YES (Present error)>>Replace the IPDM E/R. Refer to PG-26, "Removal and Installation of IPDM E/R".
YES (Past error)>>Error was detected in the IPDM E/R branch line.
NO >> Repair the power supply and the ground circuit.

CAN COMMUNICATION CIRCUIT

Diagnosis Procedure

INFOID:0000000001711496

INSPECTION PROCEDURE

1. CONNECTOR INSPECTION

1. Turn the ignition switch OFF.
2. Disconnect the battery cable from the negative terminal.
3. Disconnect all the unit connectors on CAN communication system.
4. Check terminals and connectors for damage, bend and loose connection.

Is the inspection result normal?

YES >> GO TO 2.
NO >> Repair the terminal and connector.

2. CHECK HARNESS CONTINUITY (SHORT CIRCUIT)

Check the continuity between the data link connector terminals.

Data link connector			Continuity
Connector No.	Terminal No.		
M22	6	14	Not existed

Is the inspection result normal?

YES >> GO TO 3.
NO >> Check the harness and repair the root cause.

3. CHECK HARNESS CONTINUITY (SHORT CIRCUIT)

Check the continuity between the data link connector and the ground.

Data link connector		Ground	Continuity
Connector No.	Terminal No.		
M22	6		Not existed
	14		Not existed

Is the inspection result normal?

YES >> GO TO 4.
NO >> Check the harness and repair the root cause.

4. CHECK ECM AND IPDM E/R TERMINATION CIRCUIT

1. Remove the ECM and the IPDM E/R.
2. Check the resistance between the ECM terminals.

ECM		Resistance (Ω)
Terminal No.		
84	83	Approx. 108 – 132

3. Check the resistance between the IPDM E/R terminals.

IPDM E/R		Resistance (Ω)
Terminal No.		
41	40	Approx. 108 – 132

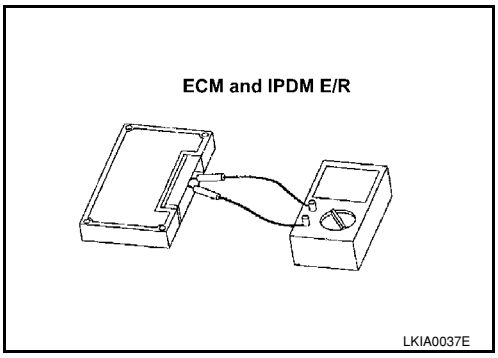

Is the measurement value within the specification?

YES >> GO TO 5.
NO >> Replace the ECM and/or the IPDM E/R.

5. CHECK SYMPTOM

Connect all the connectors. Check if the symptoms described in the “Symptom (Results from interview with customer)” are reproduced.

Inspection result

Reproduced>>GO TO 6.
Non-reproduced>>Start the diagnosis again. Follow the trouble diagnosis procedure when past error is detected.

6. CHECK UNIT REPRODUCTION

Perform the reproduction test as per the following procedure for each unit.

1. Turn the ignition switch OFF.
2. Disconnect the battery cable from the negative terminal.
3. Disconnect one of the unit connectors of CAN communication system.
   NOTE:
   ECM and IPDM E/R have a termination circuit. Check other units first.
4. Connect the battery cable to the negative terminal. Check if the symptoms described in the “Symptom (Results from interview with customer)” are reproduced.
   NOTE:
   Although unit-related error symptoms occur, do not confuse them with other symptoms.

Inspection result

Reproduced>>Connect the connector. Check other units as per the above procedure.
Non-reproduced>>Replace the unit whose connector was disconnected.

COMPONENT DIAGNOSIS

MAIN LINE BETWEEN DLC AND TCM CIRCUIT

Diagnosis Procedure

INFOID:0000000001711503

INSPECTION PROCEDURE

1.CHECK CONNECTOR

1. Turn the ignition switch OFF.
2. Disconnect the battery cable from the negative terminal.
3. Check the following terminals and connectors for damage, bend and loose connection (connector side and harness side).

- Harness connector M69
- Harness connector E7

Is the inspection result normal?

YES >> GO TO 2.
NO >> Repair the terminal and connector.

2.CHECK HARNESS CONTINUITY (OPEN CIRCUIT)

1. Disconnect the harness connectors M69 and E7.
2. Check the continuity between the data link connector and the harness connector.

Data link connector		Harness connector		Continuity
Connector No.	Terminal No.	Connector No.	Terminal No.	
M22	6	M69	32A	Existed
	14		31A	Existed

Is the inspection result normal?

YES >> GO TO 3.
NO >> Repair the main line between the data link connector and the harness connector M69.

3.CHECK HARNESS CONTINUITY (OPEN CIRCUIT)

1. Disconnect the connector of TCM.
2. Check the continuity between the harness connector and the TCM.

Harness connector		TCM harness connector		Continuity
Connector No.	Terminal No.	Connector No.	Terminal No.	
E7	32A	E31	5	Existed
	31A		6	Existed

Is the inspection result normal?

YES (Present error)>>Check CAN system type decision again.
YES (Past error)>>Error was detected in the main line between the data link connector and the TCM.
NO >> Repair the main line between the harness connector E7 and the TCM.

ECM BRANCH LINE CIRCUIT

Diagnosis Procedure

INFOID:0000000001711505

1.CHECK CONNECTOR

1. Turn the ignition switch OFF.
2. Disconnect the battery cable from the negative terminal.
3. Check the following terminals and connectors for damage, bend and loose connection (unit side and connector side).

- ECM
- Harness connector E7
- Harness connector M69

Is the inspection result normal?

YES >> GO TO 2.
NO >> Repair the terminal and connector.

2.CHECK HARNESS FOR OPEN CIRCUIT

1. Disconnect the connector of ECM.
2. Check the resistance between the ECM harness connector terminals.

ECM harness connector			Resistance (Ω)
Connector No.	Terminal No.		
E16	84	83	Approx. 108 – 132

Is the measurement value within the specification?

YES >> GO TO 3.
NO >> Repair the ECM branch line.

3.CHECK POWER SUPPLY AND GROUND CIRCUIT

Check the power supply and the ground circuit of the ECM. Refer to EC-138, "Diagnosis Procedure".

Is the inspection result normal?

YES (Present error)>>Replace the ECM. Refer to EC-75, "Procedure After Replacing ECM".
YES (Past error)>>Error was detected in the ECM branch line.
NO >> Repair the power supply and the ground circuit.

BCM BRANCH LINE CIRCUIT

Diagnosis Procedure

INFOID:0000000001711506

1.CHECK CONNECTOR

1. Turn the ignition switch OFF.
2. Disconnect the battery cable from the negative terminal.
3. Check the terminals and connectors of the BCM for damage, bend and loose connection (unit side and connector side).

Is the inspection result normal?

YES >> GO TO 2.
NO >> Repair the terminal and connector.

2.CHECK HARNESS FOR OPEN CIRCUIT

1. Disconnect the connector of BCM.
2. Check the resistance between the BCM harness connector terminals.

BCM harness connector			Resistance (Ω)
Connector No.	Terminal No.		
M18	39	40	Approx. 54 – 66

Is the measurement value within the specification?

YES >> GO TO 3.
NO >> Repair the BCM branch line.

3.CHECK POWER SUPPLY AND GROUND CIRCUIT

Check the power supply and the ground circuit of the BCM. Refer to BCS-15, "BCM Power Supply and Ground Circuit Inspection".

Is the inspection result normal?

YES (Present error)>>Replace the BCM. Refer to BCS-18, "Removal and Installation of BCM".
YES (Past error)>>Error was detected in the BCM branch line.
NO >> Repair the power supply and the ground circuit.

DLC BRANCH LINE CIRCUIT

Diagnosis Procedure

INFOID:0000000001711507

INSPECTION PROCEDURE

1. CHECK CONNECTOR

1. Turn the ignition switch OFF.
2. Disconnect the battery cable from the negative terminal.
3. Check the terminals and connectors of the data link connector for damage, bend and loose connection (connector side and harness side).

Is the inspection result normal?

YES >> GO TO 2.
NO >> Repair the terminal and connector.

2. CHECK HARNESS FOR OPEN CIRCUIT

Check the resistance between the data link connector terminals.

Data link connector			Resistance (Ω)
Connector No.	Terminal No.		
M22	6	14	Approx. 54 – 66

Is the measurement value within the specification?

YES (Present error)>>Check the CAN system type decision again.
YES (Past error)>>Error was detected in the data link connector branch line circuit.
NO >> Repair the data link connector branch line.

EPS BRANCH LINE CIRCUIT

Diagnosis Procedure

INFOID:0000000001711508

INSPECTION PROCEDURE

1.CHECK CONNECTOR

1. Turn the ignition switch OFF.
2. Disconnect the battery cable from the negative terminal.
3. Check the terminals and connectors of the EPS control unit for damage, bend and loose connection (unit side and connector side).

Is the inspection result normal?

YES >> GO TO 2.
NO >> Repair the terminal and connector.

2.CHECK HARNESS FOR OPEN CIRCUIT

1. Disconnect the connector of EPS control unit.
2. Check the resistance between the EPS control unit harness connector terminals.

EPS control unit harness connector			Resistance (Ω)
Connector No.	Terminal No.		
M53	9	16	Approx. 54 – 66

Is the measurement value within the specification?

YES >> GO TO 3.
NO >> Repair the EPS control unit branch line.

3.CHECK POWER SUPPLY AND GROUND CIRCUIT

Check the power supply and the ground circuit of the EPS control unit. Refer to STC-14, "DTC C1601 BATTERY VOLT".

Is the inspection result normal?

YES (Present error)>>Replace the EPS control unit. Refer to PS-9, "Removal and Installation".
YES (Past error)>>Error was detected in the EPS control unit branch line.
NO >> Repair the power supply and the ground circuit.

M&A BRANCH LINE CIRCUIT

Diagnosis Procedure

INFOID:0000000001711510

INSPECTION PROCEDURE

1.CHECK CONNECTOR

1. Turn the ignition switch OFF.
2. Disconnect the battery cable from the negative terminal.
3. Check the terminals and connectors of the combination meter for damage, bend and loose connection (unit side and connector side).

Is the inspection result normal?

YES >> GO TO 2.
NO >> Repair the terminal and connector.

2.CHECK HARNESS FOR OPEN CIRCUIT

1. Disconnect the connector of combination meter.
2. Check the resistance between the combination meter harness connector terminals.

Combination meter harness connector			Resistance (Ω)
Connector No.	Terminal No.		
M24	1	2	Approx. 54 – 66

Is the measurement value within the specification?

YES >> GO TO 3.
NO >> Repair the combination meter branch line.

3.CHECK POWER SUPPLY AND GROUND CIRCUIT

Check the power supply and the ground circuit of the combination meter. Refer to DI-15, "Power Supply and Ground Circuit Inspection".

Is the inspection result normal?

YES (Present error)>>Replace the combination meter. Refer to DI-20, "Removal and Installation".
YES (Past error)>>Error was detected in the combination meter branch line.
NO >> Repair the power supply and the ground circuit.

ABS BRANCH LINE CIRCUIT

Diagnosis Procedure

INFOID:0000000001711513

1.CHECK CONNECTOR

1. Turn the ignition switch OFF.
2. Disconnect the battery cable from the negative terminal.
3. Check the terminals and connectors of the ABS actuator and electric unit (control unit) for damage, bend and loose connection (unit side and connector side).

Is the inspection result normal?

YES >> GO TO 2.
NO >> Repair the terminal and connector.

2.CHECK HARNESS FOR OPEN CIRCUIT

1. Disconnect the connector of ABS actuator and electric unit (control unit).
2. Check the resistance between the ABS actuator and electric unit (control unit) harness connector terminals.

ABS actuator and electric unit (control unit) harness connector			Resistance (Ω)
Connector No.	Terminal No.		
E33	26	15	Approx. 54 – 66

Is the measurement value within the specification?

YES >> GO TO 3.
NO >> Repair the ABS actuator and electric unit (control unit) branch line.

3.CHECK POWER SUPPLY AND GROUND CIRCUIT

Check the power supply and the ground circuit of the ABS actuator and electric unit (control unit). Refer to BRC-27, "ABS Control Unit Power and Ground Systems Inspection".

Is the inspection result normal?

YES (Present error)>>Replace the ABS actuator and electric unit (control unit). Refer to BRC-35, "Removal and Installation".
YES (Past error)>>Error was detected in the ABS actuator and electric unit (control unit) branch line.
NO >> Repair the power supply and the ground circuit.

TCM BRANCH LINE CIRCUIT

Diagnosis Procedure

INFOID:0000000001711514

1. CHECK CONNECTOR

1. Turn the ignition switch OFF.
2. Disconnect the battery cable from the negative terminal.
3. Check the terminals and connector of the TCM for damage, bend and loose connection (unit side and connector side).

Is the inspection result normal?

YES >> GO TO 2.
NO >> Repair the terminal and connector.

2. CHECK HARNESS FOR OPEN CIRCUIT

1. Disconnect the connector of TCM.
2. Check the resistance between the TCM harness connector terminals.

TCM harness connector			Resistance (Ω)
Connector No.	Terminal No.		
E31	5	6	Approx. 54 – 66

Is the measurement value within the specification?

YES >> GO TO 3.
NO >> Repair the TCM branch line.

3. CHECK POWER SUPPLY AND GROUND CIRCUIT

Check the power supply and the ground circuit of the TCM. Refer to the following.
- A/T models: AT-165, "Diagnosis Procedure"
- CVT models: CVT-123, "Diagnosis Procedure"

Is the inspection result normal?

YES (Present error)>>Replace the TCM. Refer to the following.
- A/T models: AT-202, "Removal and Installation"
- CVT models: CVT-161, "Removal and Installation"

YES (Past error)>>Error was detected in the TCM branch line.
NO >> Repair the power supply and the ground circuit.

IPDM-E BRANCH LINE CIRCUIT

Diagnosis Procedure

INFOID:0000000001711515

INSPECTION PROCEDURE

1.CHECK CONNECTOR

1. Turn the ignition switch OFF.
2. Disconnect the battery cable from the negative terminal.
3. Check the following terminals and connectors for damage, bend and loose connection (unit side and connector side).

- IPDM E/R
- Harness connector E7 (Models without ABS)
- Harness connector M69 (Models without ABS)

Is the inspection result normal?

YES >> GO TO 2.
NO >> Repair the terminal and connector.

2.CHECK HARNESS FOR OPEN CIRCUIT

1. Disconnect the connector of IPDM E/R.
2. Check the resistance between the IPDM E/R harness connector terminals.

IPDM E/R harness connector			Resistance (Ω)
Connector No.	Terminal No.		
E46	41	40	Approx. 108 – 132

Is the measurement value within the specification?

YES >> GO TO 3.
NO >> Repair the IPDM E/R branch line.

3.CHECK POWER SUPPLY AND GROUND CIRCUIT

Check the power supply and the ground circuit of the IPDM E/R. Refer to PG-25, "IPDM E/R Power/Ground Circuit Inspection".

Is the inspection result normal?

YES (Present error)>>Replace the IPDM E/R. Refer to PG-26, "Removal and Installation of IPDM E/R".
YES (Past error)>>Error was detected in the IPDM E/R branch line.
NO >> Repair the power supply and the ground circuit.

CAN COMMUNICATION CIRCUIT

Diagnosis Procedure

INFOID:0000000001711516

INSPECTION PROCEDURE

1. CONNECTOR INSPECTION

1. Turn the ignition switch OFF.
2. Disconnect the battery cable from the negative terminal.
3. Disconnect all the unit connectors on CAN communication system.
4. Check terminals and connectors for damage, bend and loose connection.

Is the inspection result normal?

YES >> GO TO 2.
NO >> Repair the terminal and connector.

2. CHECK HARNESS CONTINUITY (SHORT CIRCUIT)

Check the continuity between the data link connector terminals.

Data link connector			Continuity
Connector No.	Terminal No.		
M22	6	14	Not existed

Is the inspection result normal?

YES >> GO TO 3.
NO >> Check the harness and repair the root cause.

3. CHECK HARNESS CONTINUITY (SHORT CIRCUIT)

Check the continuity between the data link connector and the ground.

Data link connector		Ground	Continuity
Connector No.	Terminal No.		
M22	6		Not existed
	14		Not existed

Is the inspection result normal?

YES >> GO TO 4.
NO >> Check the harness and repair the root cause.

4. CHECK ECM AND IPDM E/R TERMINATION CIRCUIT

1. Remove the ECM and the IPDM E/R.
2. Check the resistance between the ECM terminals.

ECM		Resistance (Ω)
Terminal No.		
84	83	Approx. 108 – 132

3. Check the resistance between the IPDM E/R terminals.

IPDM E/R		Resistance (Ω)
Terminal No.		
41	40	Approx. 108 – 132

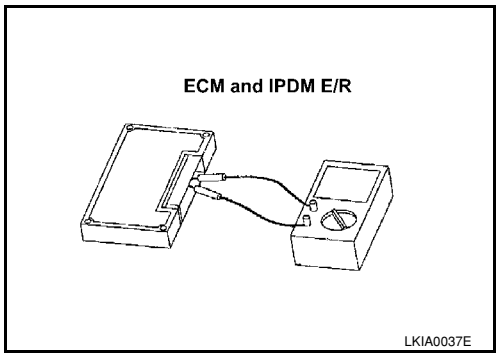

Is the measurement value within the specification?

YES >> GO TO 5.
NO >> Replace the ECM and/or the IPDM E/R.

5. CHECK SYMPTOM

Connect all the connectors. Check if the symptoms described in the “Symptom (Results from interview with customer)” are reproduced.

Inspection result

Reproduced>>GO TO 6.
Non-reproduced>>Start the diagnosis again. Follow the trouble diagnosis procedure when past error is detected.

6. CHECK UNIT REPRODUCTION

Perform the reproduction test as per the following procedure for each unit.

1. Turn the ignition switch OFF.
2. Disconnect the battery cable from the negative terminal.
3. Disconnect one of the unit connectors of CAN communication system.
   NOTE:
   ECM and IPDM E/R have a termination circuit. Check other units first.
4. Connect the battery cable to the negative terminal. Check if the symptoms described in the “Symptom (Results from interview with customer)” are reproduced.
   NOTE:
   Although unit-related error symptoms occur, do not confuse them with other symptoms.

Inspection result

Reproduced>>Connect the connector. Check other units as per the above procedure.
Non-reproduced>>Replace the unit whose connector was disconnected.

COMPONENT DIAGNOSIS

MAIN LINE BETWEEN DLC AND TCM CIRCUIT

Diagnosis Procedure

INFOID:0000000001711523

INSPECTION PROCEDURE

1. CHECK CONNECTOR

1. Turn the ignition switch OFF.
2. Disconnect the battery cable from the negative terminal.
3. Check the following terminals and connectors for damage, bend and loose connection (connector side and harness side).

- Harness connector M69
- Harness connector E7

Is the inspection result normal?

YES >> GO TO 2.
NO >> Repair the terminal and connector.

2. CHECK HARNESS CONTINUITY (OPEN CIRCUIT)

1. Disconnect the harness connectors M69 and E7.
2. Check the continuity between the data link connector and the harness connector.

Data link connector		Harness connector		Continuity
Connector No.	Terminal No.	Connector No.	Terminal No.	
M22	6	M69	32A	Existed
	14		31A	Existed

Is the inspection result normal?

YES >> GO TO 3.
NO >> Repair the main line between the data link connector and the harness connector M69.

3. CHECK HARNESS CONTINUITY (OPEN CIRCUIT)

1. Disconnect the connector of TCM.
2. Check the continuity between the harness connector and the TCM.

Harness connector		TCM harness connector		Continuity
Connector No.	Terminal No.	Connector No.	Terminal No.	
E7	32A	E31	5	Existed
	31A		6	Existed

Is the inspection result normal?

YES (Present error)>>Check CAN system type decision again.
YES (Past error)>>Error was detected in the main line between the data link connector and the TCM.
NO >> Repair the main line between the harness connector E7 and the TCM.

ECM BRANCH LINE CIRCUIT

Diagnosis Procedure

INFOID:0000000001711525

1.CHECK CONNECTOR

1. Turn the ignition switch OFF.
2. Disconnect the battery cable from the negative terminal.
3. Check the following terminals and connectors for damage, bend and loose connection (unit side and connector side).

- ECM
- Harness connector E7
- Harness connector M69

Is the inspection result normal?

YES >> GO TO 2.
NO >> Repair the terminal and connector.

2.CHECK HARNESS FOR OPEN CIRCUIT

1. Disconnect the connector of ECM.
2. Check the resistance between the ECM harness connector terminals.

ECM harness connector			Resistance (Ω)
Connector No.	Terminal No.		
E16	84	83	Approx. 108 – 132

Is the measurement value within the specification?

YES >> GO TO 3.
NO >> Repair the ECM branch line.

3.CHECK POWER SUPPLY AND GROUND CIRCUIT

Check the power supply and the ground circuit of the ECM. Refer to EC-138, "Diagnosis Procedure".

Is the inspection result normal?

YES (Present error)>>Replace the ECM. Refer to EC-75, "Procedure After Replacing ECM".
YES (Past error)>>Error was detected in the ECM branch line.
NO >> Repair the power supply and the ground circuit.

BCM BRANCH LINE CIRCUIT

Diagnosis Procedure

INFOID:0000000001711526

1.CHECK CONNECTOR

1. Turn the ignition switch OFF.
2. Disconnect the battery cable from the negative terminal.
3. Check the terminals and connectors of the BCM for damage, bend and loose connection (unit side and connector side).

Is the inspection result normal?

YES >> GO TO 2.
NO >> Repair the terminal and connector.

2.CHECK HARNESS FOR OPEN CIRCUIT

1. Disconnect the connector of BCM.
2. Check the resistance between the BCM harness connector terminals.

BCM harness connector			Resistance (Ω)
Connector No.	Terminal No.		
M18	39	40	Approx. 54 – 66

Is the measurement value within the specification?

YES >> GO TO 3.
NO >> Repair the BCM branch line.

3.CHECK POWER SUPPLY AND GROUND CIRCUIT

Check the power supply and the ground circuit of the BCM. Refer to BCS-15, "BCM Power Supply and Ground Circuit Inspection".

Is the inspection result normal?

YES (Present error)>>Replace the BCM. Refer to BCS-18, "Removal and Installation of BCM".
YES (Past error)>>Error was detected in the BCM branch line.
NO >> Repair the power supply and the ground circuit.

DLC BRANCH LINE CIRCUIT

Diagnosis Procedure

INFOID:0000000001711527

INSPECTION PROCEDURE

1.CHECK CONNECTOR

1. Turn the ignition switch OFF.
2. Disconnect the battery cable from the negative terminal.
3. Check the terminals and connectors of the data link connector for damage, bend and loose connection (connector side and harness side).

Is the inspection result normal?

YES >> GO TO 2.
NO >> Repair the terminal and connector.

2.CHECK HARNESS FOR OPEN CIRCUIT

Check the resistance between the data link connector terminals.

Data link connector			Resistance (Ω)
Connector No.	Terminal No.		
M22	6	14	Approx. 54 – 66

Is the measurement value within the specification?

YES (Present error)>>Check the CAN system type decision again.
YES (Past error)>>Error was detected in the data link connector branch line circuit.
NO >> Repair the data link connector branch line.

EPS BRANCH LINE CIRCUIT

Diagnosis Procedure

INFOID:0000000001711528

INSPECTION PROCEDURE

1. CHECK CONNECTOR

1. Turn the ignition switch OFF.
2. Disconnect the battery cable from the negative terminal.
3. Check the terminals and connectors of the EPS control unit for damage, bend and loose connection (unit side and connector side).

Is the inspection result normal?

YES >> GO TO 2.
NO >> Repair the terminal and connector.

2. CHECK HARNESS FOR OPEN CIRCUIT

1. Disconnect the connector of EPS control unit.
2. Check the resistance between the EPS control unit harness connector terminals.

EPS control unit harness connector			Resistance (Ω)
Connector No.	Terminal No.		
M53	9	16	Approx. 54 – 66

Is the measurement value within the specification?

YES >> GO TO 3.
NO >> Repair the EPS control unit branch line.

3. CHECK POWER SUPPLY AND GROUND CIRCUIT

Check the power supply and the ground circuit of the EPS control unit. Refer to STC-14, "DTC C1601 BATTERY VOLT".

Is the inspection result normal?

YES (Present error)>>Replace the EPS control unit. Refer to PS-9, "Removal and Installation".
YES (Past error)>>Error was detected in the EPS control unit branch line.
NO >> Repair the power supply and the ground circuit.

I-KEY BRANCH LINE CIRCUIT

Diagnosis Procedure

INFOID:0000000001711529

INSPECTION PROCEDURE

1.CHECK CONNECTOR

1. Turn the ignition switch OFF.
2. Disconnect the battery cable from the negative terminal.
3. Check the terminals and connectors of the Intelligent Key unit for damage, bend and loose connection (unit side and connector side).

Is the inspection result normal?

YES >> GO TO 2.
NO >> Repair the terminal and connector.

2.CHECK HARNESS FOR OPEN CIRCUIT

1. Disconnect the connector of Intelligent Key unit.
2. Check the resistance between the Intelligent Key unit harness connector terminals.

Intelligent Key unit harness connector			Resistance (Ω)
Connector No.	Terminal No.		
M52	2	3	Approx. 54 – 66

Is the measurement value within the specification?

YES >> GO TO 3.
NO >> Repair the Intelligent Key unit branch line.

3.CHECK POWER SUPPLY AND GROUND CIRCUIT

Check the power supply and the ground circuit of the Intelligent Key unit. Refer to BL-110, "Power Supply and Ground Circuit Inspection".

Is the inspection result normal?

YES (Present error)>>Replace the Intelligent Key unit. Refer to BL-142, "Removal and Installation of Intelligent Key Unit".
YES (Past error)>>Error was detected in the Intelligent Key unit branch line.
NO >> Repair the power supply and the ground circuit.

M&A BRANCH LINE CIRCUIT

Diagnosis Procedure

INFOID:0000000001711530

INSPECTION PROCEDURE

1. CHECK CONNECTOR

1. Turn the ignition switch OFF.
2. Disconnect the battery cable from the negative terminal.
3. Check the terminals and connectors of the combination meter for damage, bend and loose connection (unit side and connector side).

Is the inspection result normal?

YES >> GO TO 2.
NO >> Repair the terminal and connector.

2. CHECK HARNESS FOR OPEN CIRCUIT

1. Disconnect the connector of combination meter.
2. Check the resistance between the combination meter harness connector terminals.

Combination meter harness connector			Resistance (Ω)
Connector No.	Terminal No.		
M24	1	2	Approx. 54 – 66

Is the measurement value within the specification?

YES >> GO TO 3.
NO >> Repair the combination meter branch line.

3. CHECK POWER SUPPLY AND GROUND CIRCUIT

Check the power supply and the ground circuit of the combination meter. Refer to DI-15, "Power Supply and Ground Circuit Inspection".

Is the inspection result normal?

YES (Present error)>>Replace the combination meter. Refer to DI-20, "Removal and Installation".
YES (Past error)>>Error was detected in the combination meter branch line.
NO >> Repair the power supply and the ground circuit.

ABS BRANCH LINE CIRCUIT

Diagnosis Procedure

INFOID:0000000001711533

1.CHECK CONNECTOR

1. Turn the ignition switch OFF.
2. Disconnect the battery cable from the negative terminal.
3. Check the terminals and connectors of the ABS actuator and electric unit (control unit) for damage, bend and loose connection (unit side and connector side).

Is the inspection result normal?

YES >> GO TO 2.
NO >> Repair the terminal and connector.

2.CHECK HARNESS FOR OPEN CIRCUIT

1. Disconnect the connector of ABS actuator and electric unit (control unit).
2. Check the resistance between the ABS actuator and electric unit (control unit) harness connector terminals.

ABS actuator and electric unit (control unit) harness connector			Resistance (Ω)
Connector No.	Terminal No.		
E33	26	15	Approx. 54 – 66

Is the measurement value within the specification?

YES >> GO TO 3.
NO >> Repair the ABS actuator and electric unit (control unit) branch line.

3.CHECK POWER SUPPLY AND GROUND CIRCUIT

Check the power supply and the ground circuit of the ABS actuator and electric unit (control unit). Refer to BRC-27, "ABS Control Unit Power and Ground Systems Inspection".

Is the inspection result normal?

YES (Present error)>>Replace the ABS actuator and electric unit (control unit). Refer to BRC-35, "Removal and Installation".
YES (Past error)>>Error was detected in the ABS actuator and electric unit (control unit) branch line.
NO >> Repair the power supply and the ground circuit.

TCM BRANCH LINE CIRCUIT

Diagnosis Procedure

INFOID:0000000001711534

1.CHECK CONNECTOR

1. Turn the ignition switch OFF.
2. Disconnect the battery cable from the negative terminal.
3. Check the terminals and connector of the TCM for damage, bend and loose connection (unit side and connector side).

Is the inspection result normal?

YES >> GO TO 2.
NO >> Repair the terminal and connector.

2.CHECK HARNESS FOR OPEN CIRCUIT

1. Disconnect the connector of TCM.
2. Check the resistance between the TCM harness connector terminals.

TCM harness connector			Resistance (Ω)
Connector No.	Terminal No.		
E31	5	6	Approx. 54 – 66

Is the measurement value within the specification?

YES >> GO TO 3.
NO >> Repair the TCM branch line.

3.CHECK POWER SUPPLY AND GROUND CIRCUIT

Check the power supply and the ground circuit of the TCM. Refer to the following.
- A/T models: AT-165, "Diagnosis Procedure"
- CVT models: CVT-123, "Diagnosis Procedure"

Is the inspection result normal?

YES (Present error)>>Replace the TCM. Refer to the following.
- A/T models: AT-202, "Removal and Installation"
- CVT models: CVT-161, "Removal and Installation"

YES (Past error)>>Error was detected in the TCM branch line.
NO >> Repair the power supply and the ground circuit.

IPDM-E BRANCH LINE CIRCUIT

Diagnosis Procedure

INFOID:0000000001711535

INSPECTION PROCEDURE

1.CHECK CONNECTOR

1. Turn the ignition switch OFF.
2. Disconnect the battery cable from the negative terminal.
3. Check the following terminals and connectors for damage, bend and loose connection (unit side and connector side).

- IPDM E/R
- Harness connector E7 (Models without ABS)
- Harness connector M69 (Models without ABS)

Is the inspection result normal?

YES >> GO TO 2.
NO >> Repair the terminal and connector.

2.CHECK HARNESS FOR OPEN CIRCUIT

1. Disconnect the connector of IPDM E/R.
2. Check the resistance between the IPDM E/R harness connector terminals.

IPDM E/R harness connector			Resistance (Ω)
Connector No.	Terminal No.		
E46	41	40	Approx. 108 – 132

Is the measurement value within the specification?

YES >> GO TO 3.
NO >> Repair the IPDM E/R branch line.

3.CHECK POWER SUPPLY AND GROUND CIRCUIT

Check the power supply and the ground circuit of the IPDM E/R. Refer to PG-25, "IPDM E/R Power/Ground Circuit Inspection".

Is the inspection result normal?

YES (Present error)>>Replace the IPDM E/R. Refer to PG-26, "Removal and Installation of IPDM E/R".
YES (Past error)>>Error was detected in the IPDM E/R branch line.
NO >> Repair the power supply and the ground circuit.

CAN COMMUNICATION CIRCUIT

Diagnosis Procedure

INFOID:0000000001711536

INSPECTION PROCEDURE

1. CONNECTOR INSPECTION

1. Turn the ignition switch OFF.
2. Disconnect the battery cable from the negative terminal.
3. Disconnect all the unit connectors on CAN communication system.
4. Check terminals and connectors for damage, bend and loose connection.

Is the inspection result normal?

YES >> GO TO 2.
NO >> Repair the terminal and connector.

2. CHECK HARNESS CONTINUITY (SHORT CIRCUIT)

Check the continuity between the data link connector terminals.

Data link connector			Continuity
Connector No.	Terminal No.		
M22	6	14	Not existed

Is the inspection result normal?

YES >> GO TO 3.
NO >> Check the harness and repair the root cause.

3. CHECK HARNESS CONTINUITY (SHORT CIRCUIT)

Check the continuity between the data link connector and the ground.

Data link connector		Ground	Continuity
Connector No.	Terminal No.		
M22	6		Not existed
	14		Not existed

Is the inspection result normal?

YES >> GO TO 4.
NO >> Check the harness and repair the root cause.

4. CHECK ECM AND IPDM E/R TERMINATION CIRCUIT

1. Remove the ECM and the IPDM E/R.
2. Check the resistance between the ECM terminals.

ECM		Resistance (Ω)
Terminal No.		
84	83	Approx. 108 – 132

3. Check the resistance between the IPDM E/R terminals.

IPDM E/R		Resistance (Ω)
Terminal No.		
41	40	Approx. 108 – 132

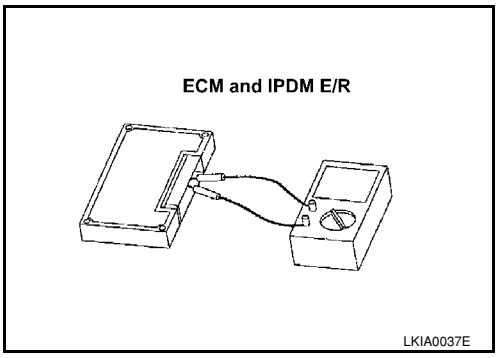

Is the measurement value within the specification?

YES >> GO TO 5.
NO >> Replace the ECM and/or the IPDM E/R.

5. CHECK SYMPTOM

Connect all the connectors. Check if the symptoms described in the “Symptom (Results from interview with customer)” are reproduced.

Inspection result

Reproduced>>GO TO 6.
Non-reproduced>>Start the diagnosis again. Follow the trouble diagnosis procedure when past error is detected.

6. CHECK UNIT REPRODUCTION

Perform the reproduction test as per the following procedure for each unit.

1. Turn the ignition switch OFF.
2. Disconnect the battery cable from the negative terminal.
3. Disconnect one of the unit connectors of CAN communication system.
   NOTE:
   ECM and IPDM E/R have a termination circuit. Check other units first.
4. Connect the battery cable to the negative terminal. Check if the symptoms described in the “Symptom (Results from interview with customer)” are reproduced.
   NOTE:
   Although unit-related error symptoms occur, do not confuse them with other symptoms.

Inspection result

Reproduced>>Connect the connector. Check other units as per the above procedure.
Non-reproduced>>Replace the unit whose connector was disconnected.

SECTION LT
LIGHTING SYSTEM

CONTENTS

SERVICE INFORMATION 3

PRECAUTIONS 3
Precaution for Supplemental Restraint System (SRS) "AIR BAG" and "SEAT BELT PRE-TENSIONER" 3

HEADLAMP (FOR USA) 4
Component Parts and Harness Connector Location 4
System Description 4
CAN COMMUNICATION SYSTEM DESCRIPTION 5
Schematic 6
Wiring Diagram 7
Terminal and Reference Value for BCM 10
Terminal and Reference Value for IPDM E/R 10
How to Perform Trouble Diagnosis 11
Preliminary Check 11
CONSULT-III Function (BCM) 11
CONSULT-III Function (IPDM E/R) 12
Headlamp High Beam Does Not Illuminate (Both Sides) 13
Headlamp High Beam Does Not Illuminate (One Side) 15
High Beam Indicator Lamp Does Not Illuminate 16
Headlamp Low Beam Does Not Illuminate (Both Sides) 16
Headlamp Low Beam Does Not Illuminate (One Side) 19
Headlamps Do Not Turn OFF 20
Aiming Adjustment 21
Bulb Replacement 22
Removal and Installation 23
Disassembly and Assembly 23

HEADLAMP (FOR CANADA) - DAYTIME LIGHT SYSTEM - 25
Component Parts and Harness Connector Location 25
System Description 25
CAN Communication System Description 27
Schematic 28
Wiring Diagram - DTRL - 29
Terminal and Reference Value for BCM 32
Terminal and Reference Value for IPDM E/R 32
How to Perform Trouble Diagnosis 33
Preliminary Check 33
CONSULT-III Function (BCM) 33
CONSULT-III Function (IPDM E/R) 33
Daytime Light Control Does Not Operate Properly (High Beam Headlamps Operate Properly) 33
Aiming Adjustment 35
Bulb Replacement 36
Removal and Installation 37
Disassembly and Assembly 37

FRONT FOG LAMP 39
Component Parts and Harness Connector Location 39
System Description 39
CAN Communication System Description 40
Wiring Diagram - F/FOG - 41
Terminal and Reference Value for BCM 42
Terminal and Reference Value for IPDM E/R 42
How to Proceed with Trouble Diagnosis 43
Preliminary Check 43
CONSULT-III Function (BCM) 43
CONSULT-III Function (IPDM E/R) 43
Front Fog lamps Do Not Illuminate (Both Sides) 43
Front Fog Lamp Does Not Illuminate (One Side) 45
Aiming Adjustment 46
Bulb Replacement 47
Removal and Installation 47

TURN SIGNAL AND HAZARD WARNING LAMPS 48
Component Parts and Harness Connector Location 48
System Description 48
CAN Communication System Description 50
Schematic 51

Wiring Diagram - TURN - 52
Terminal and Reference Value for BCM 55
How to Proceed with Trouble Diagnosis 55
Preliminary Check 56
CONSULT-III Function (BCM) 56
Turn Signals Do Not Operate 56
Front Turn Signal Lamp Does Not Operate 56
Rear Turn Signal Lamp Does Not Operate 57
Hazard Warning Lamp Does Not Operate But Turn Signal Lamp Operates 58
Turn Signal Indicator Lamp Does Not Operate 59
Bulb Replacement for Front Turn Signal Lamp 59
Bulb Replacement for Rear Turn Signal Lamp 59
Removal and Installation of Front Turn Signal Lamp 59
Removal and Installation of Rear Turn Signal Lamp 59

LIGHTING AND TURN SIGNAL SWITCH 60
Removal and Installation 60

HAZARD SWITCH 61
Removal and Installation 61

COMBINATION SWITCH 62
Wiring Diagram - COMBSW - 62
Combination Switch Reading Function 62
Terminal and Reference Value for BCM 63
CONSULT-III Function (BCM) 63
Combination Switch Inspection 63
Removal and Installation 65

STOP LAMP 66
Wiring Diagram - STOP/L 66
Wiring Diagram - STOP/L 67
Bulb Replacement for High-Mounted Stop Lamp ... 67
Bulb Replacement for Rear Combination Lamp for Stop Lamp 68
Removal and Installation of High-Mounted Stop Lamp 68
Removal and Installation of Rear Combination Lamp for Stop Lamp 69

BACK-UP LAMP 70
Wiring Diagram - BACK/L - 70
Bulb Replacement 70
Removal and Installation 71

PARKING, LICENSE PLATE AND TAIL LAMPS 72
Component Parts and Harness Connector Location 72
System Description 72
CAN Communication System Description 73
Schematic 74
Wiring Diagram - TAIL/L - 75
Terminal and Reference Value for BCM 78
Terminal and Reference Value for IPDM E/R 78
How to Proceed with Trouble Diagnosis 79
Preliminary Check 79
CONSULT-III Function (BCM) 79
CONSULT-III Function (IPDM E/R) 79
Parking, License Plate and Tail Lamps Do Not Illuminate 79
Parking, License Plate and Tail Lamps Do Not Turn OFF (After Approx. 10 Minutes) 82
Bulb Replacement 82
Removal and Installation 83

REAR COMBINATION LAMP 85
Component 85
Bulb Replacement 85
Removal and Installation 86
Disassembly and Assembly 86

INTERIOR LAMP 87
Map Lamp 87
Luggage Compartment Lamp 87

INTERIOR ROOM LAMP 89
Component Parts and Harness Connector Location 89
System Description 89
Schematic 93
Wiring Diagram - INT/L - 94
Terminal and Reference Value for BCM 98
How to Proceed with Trouble Diagnosis 98
Preliminary Check 99
CONSULT-III Function (BCM) 99
Interior Room Lamp Control Does Not Operate (With Map Lamp) 100
Interior Room Lamp Control Does Not Operate (Without Map Lamp) 102
Bulb Replacement 103
Removal and Installation 103

ILLUMINATION 105
System Description 105
CAN Communication System Description 106
Schematic 107
Wiring Diagram - ILL - 108
Bulb Replacement 111

BULB SPECIFICATIONS 113
Headlamp 113
Exterior Lamp 113
Interior Lamp/Illumination 113

SERVICE INFORMATION

PRECAUTIONS

Precaution for Supplemental Restraint System (SRS) "AIR BAG" and "SEAT BELT PRE-TENSIONER"

INFOID:0000000001704359

The Supplemental Restraint System such as “AIR BAG” and “SEAT BELT PRE-TENSIONER”, used along with a front seat belt, helps to reduce the risk or severity of injury to the driver and front passenger for certain types of collision. This system includes seat belt switch inputs and dual stage front air bag modules. The SRS system uses the seat belt switches to determine the front air bag deployment, and may only deploy one front air bag, depending on the severity of a collision and whether the front occupants are belted or unbelted.
Information necessary to service the system safely is included in the SRS and SB section of this Service Manual.

WARNING:

- **To avoid rendering the SRS inoperative, which could increase the risk of personal injury or death in the event of a collision which would result in air bag inflation, all maintenance must be performed by an authorized NISSAN/INFINITI dealer.**
- **Improper maintenance, including incorrect removal and installation of the SRS, can lead to personal injury caused by unintentional activation of the system. For removal of Spiral Cable and Air Bag Module, see the SRS section.**
- **Do not use electrical test equipment on any circuit related to the SRS unless instructed to in this Service Manual. SRS wiring harnesses can be identified by yellow and/or orange harnesses or harness connectors.**

HEADLAMP (FOR USA)

Component Parts and Harness Connector Location

INFOID:0000000001704360

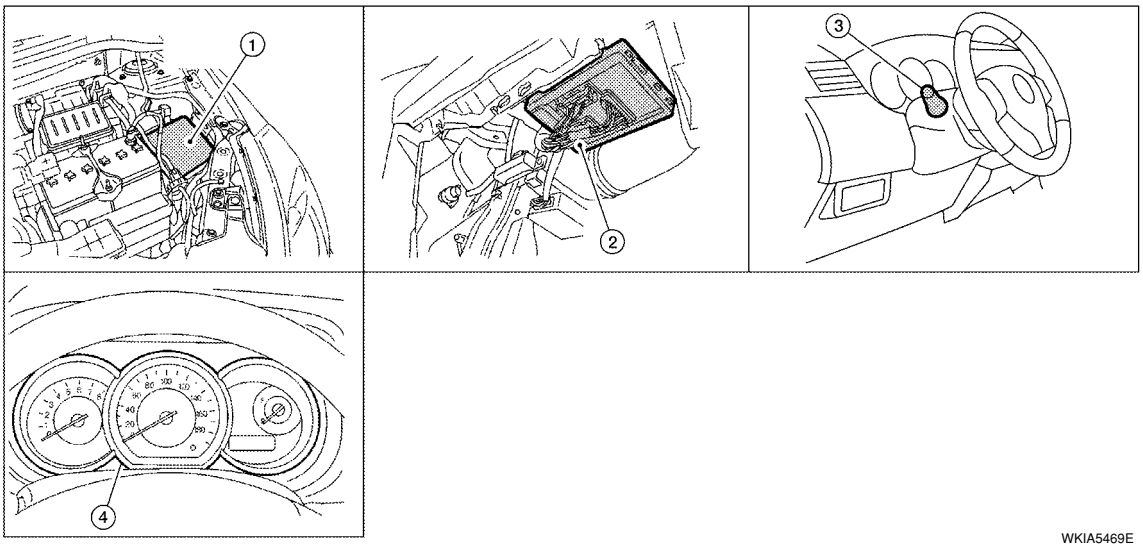

WKIA5469E

1. IPDM E/R E46, E47 and E48
2. BCM M18 and M20 (view with glove box removed)
3. Combination switch (lighting switch) M28
4. Combination meter M24

System Description

INFOID:0000000001704361

Headlamp operation is controlled by the BCM (body control module) based on inputs from the combination switch (lighting switch). When the lighting switch is placed in the 2ND position, the BCM receives an input signal requesting the headlamps (and tail lamps) illuminate. The BCM sends a signal, via the CAN communication lines, to the IPDM E/R (intelligent power distribution module engine room) requesting the headlamps be turned ON. The CPU (central processing unit) located in the IPDM E/R controls ground for the headlamp high and headlamp low relay coils. These relays direct power to the respective headlamps, which then illuminate.

OUTLINE

Power is supplied at all times
- to headlamp high relay RH and LH (located in IPDM E/R),
- to headlamp low relay (located in IPDM E/R),
- to ignition relay (located in IPDM E/R),
- through 15A fuse (No. 52, located in IPDM E/R) and
- through 20A fuse (No. 53, located in IPDM E/R)
- to CPU located in IPDM E/R,
- through 40A fusible link (letter **g** , located in fuse and fusible link block)
- to BCM terminal 70,
- through 10A fuse [No. 8, located in fuse block (J/B)]
- to BCM terminal 57, and
- through 10A fuse [No. 13, located in fuse block (J/B)]
- to combination meter terminal 27.

With the ignition switch in the ON or START position, power is supplied
- to the ignition relay (located in IPDM E/R),
- through 10A fuse [No. 6, located in fuse block (J/B)]
- to BCM terminal 38,
- through 10A fuse [No. 3, located in fuse block (J/B)]
- to combination meter terminal 28.

With the ignition switch in the ACC or ON position, power is supplied
- through 10A fuse [No. 20, located in fuse block (J/B)]
- to BCM terminal 11.

Ground is supplied

- to BCM terminal 67
- to combination meter terminals 21, 22 and 23
- through grounds M57 and M61, and
- to IPDM E/R terminals 39 and 59
- through grounds E15 and E24.

HEADLAMP OPERATION

Low Beam Operation

With the lighting switch in 2ND position, the BCM receives an input signal requesting the headlamps to illuminate. The BCM then sends a signal, via the CAN communication lines, to the IPDM E/R requesting the low beam headlamps be turned ON. The CPU located in the IPDM E/R controls ground to the headlamp low relay coil, which when energized, directs power

- through 15A fuse (No. 41, located in IPDM E/R)
- through IPDM E/R terminal 54
- to headlamp RH terminal 3, and
- through 15A fuse (No. 40, located in IPDM E/R)
- through IPDM E/R terminal 52
- to headlamp LH terminal 3.

Ground is supplied

- to headlamp RH and LH terminals 2
- through grounds E15 and E24.

With power and ground supplied, low beam headlamps illuminate.

High Beam Operation/Flash-to-Pass Operation

With the lighting switch in 2ND position and high beam switch in the HIGH position, the BCM receives an input signal requesting the headlamp high beams to illuminate. The flash to pass feature can be used any time and also sends a signal to the BCM. This input signal is then communicated to the IPDM E/R and the combination meter via the CAN communication. The CPU located in the IPDM E/R controls the headlamp high relays (LH and RH), which when energized, directs power

- through 10A fuse (No. 34, located in IPDM E/R)
- through IPDM E/R terminal 56
- to headlamp RH terminal 1, and
- through 10A fuse (No. 35, located in IPDM E/R)
- through IPDM E/R terminal 55
- to headlamp LH terminal 1.

Ground is supplied

- to headlamp RH and LH terminal 2
- through grounds E15 and E24.

With power and ground supplied, the high beam headlamps illuminate.

The BCM sends a signal, via the CAN communication lines, to the combination meter requesting the high beam indicator lamp be turned ON.

COMBINATION SWITCH READING FUNCTION

Refer to BCS-3, "System Description" .

EXTERIOR LAMP BATTERY SAVER CONTROL

Refer to LT-72, "System Description" .

CAN COMMUNICATION SYSTEM DESCRIPTION

INFOID:0000000001704362

Refer to LAN-6 .

Schematic

INFOID:0000000001704363

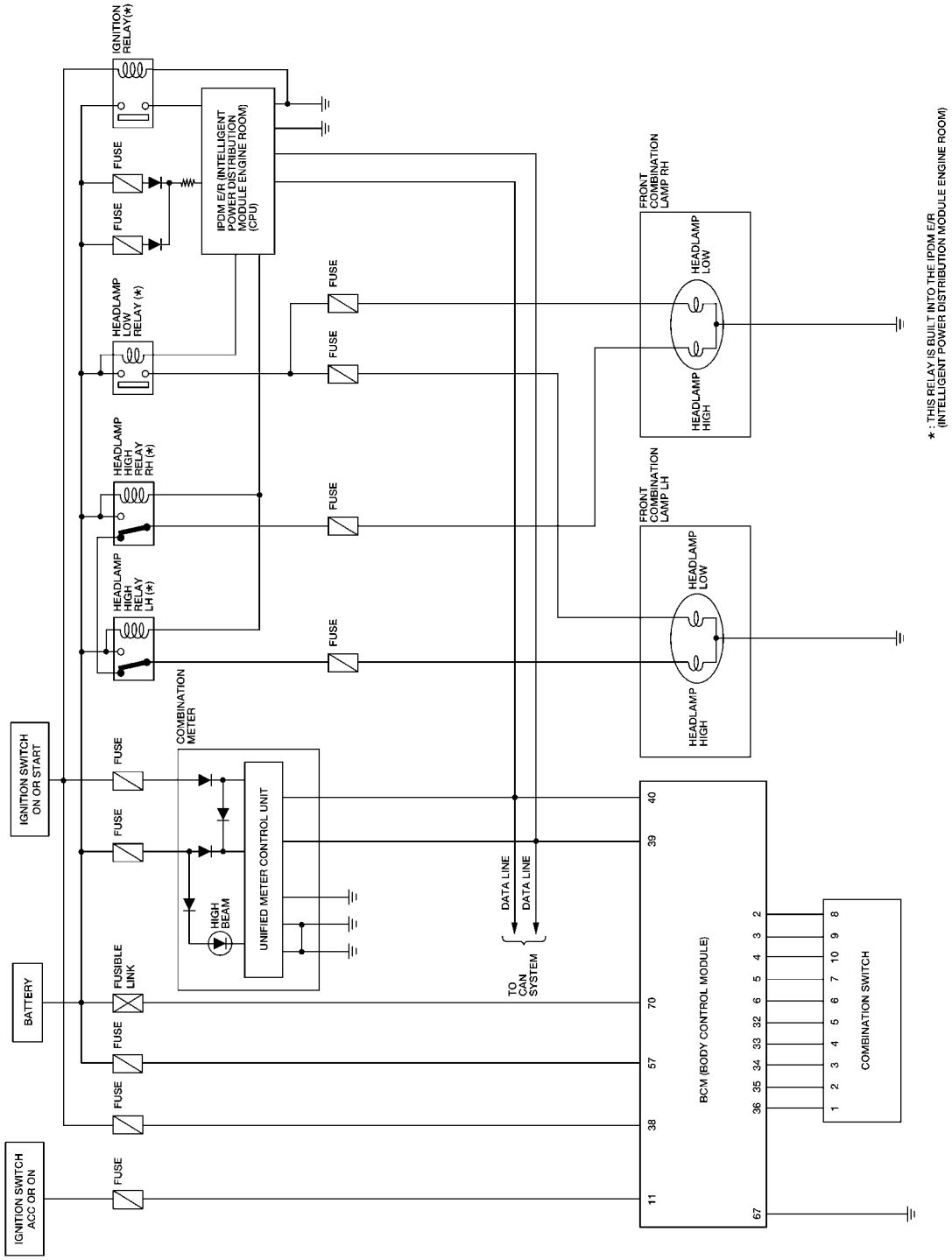

Wiring Diagram

INFOID:0000000001704364

LT-H/LAMP-01

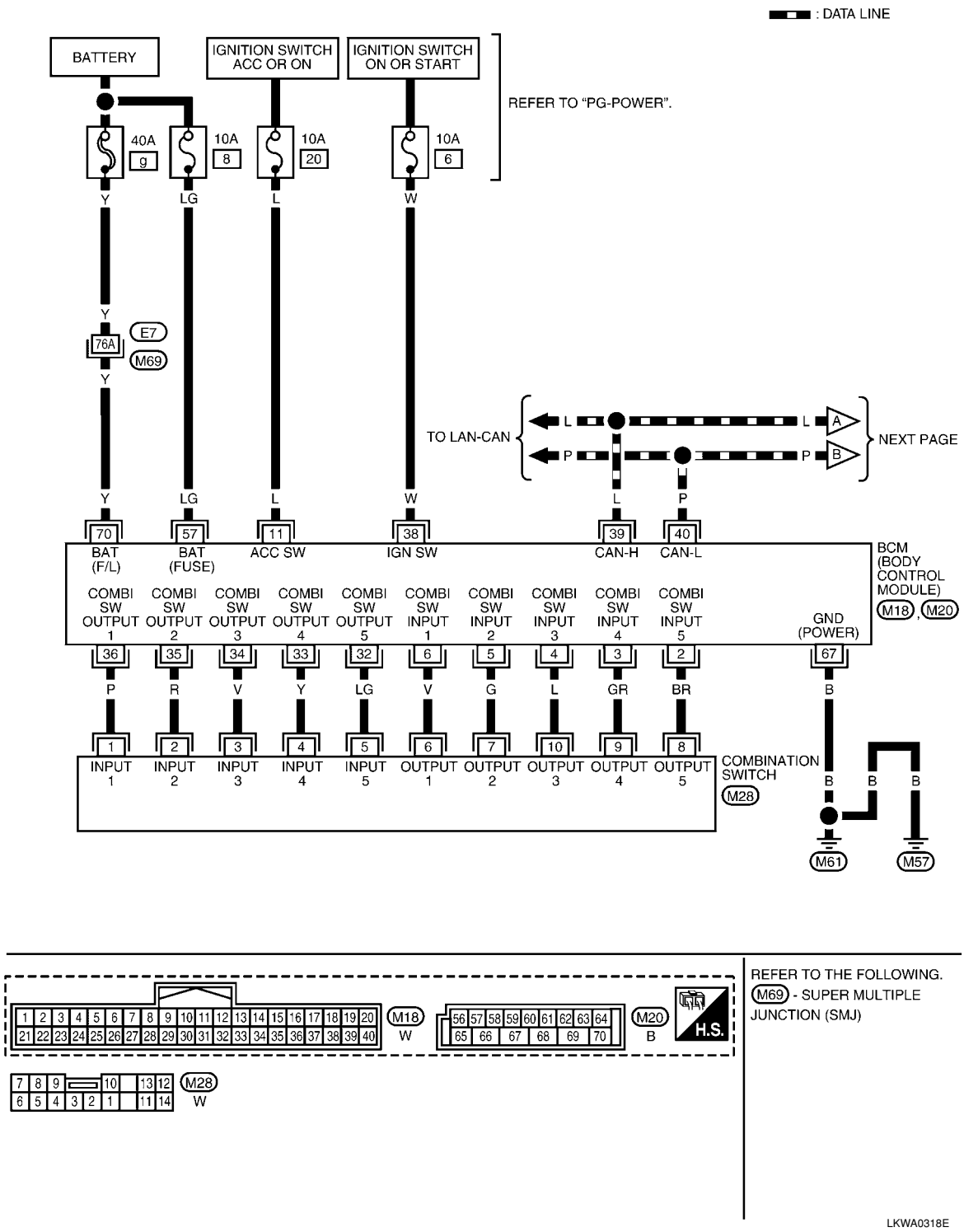

REFER TO THE FOLLOWING.
M69 - SUPER MULTIPLE JUNCTION (SMJ)

LKWA0318E

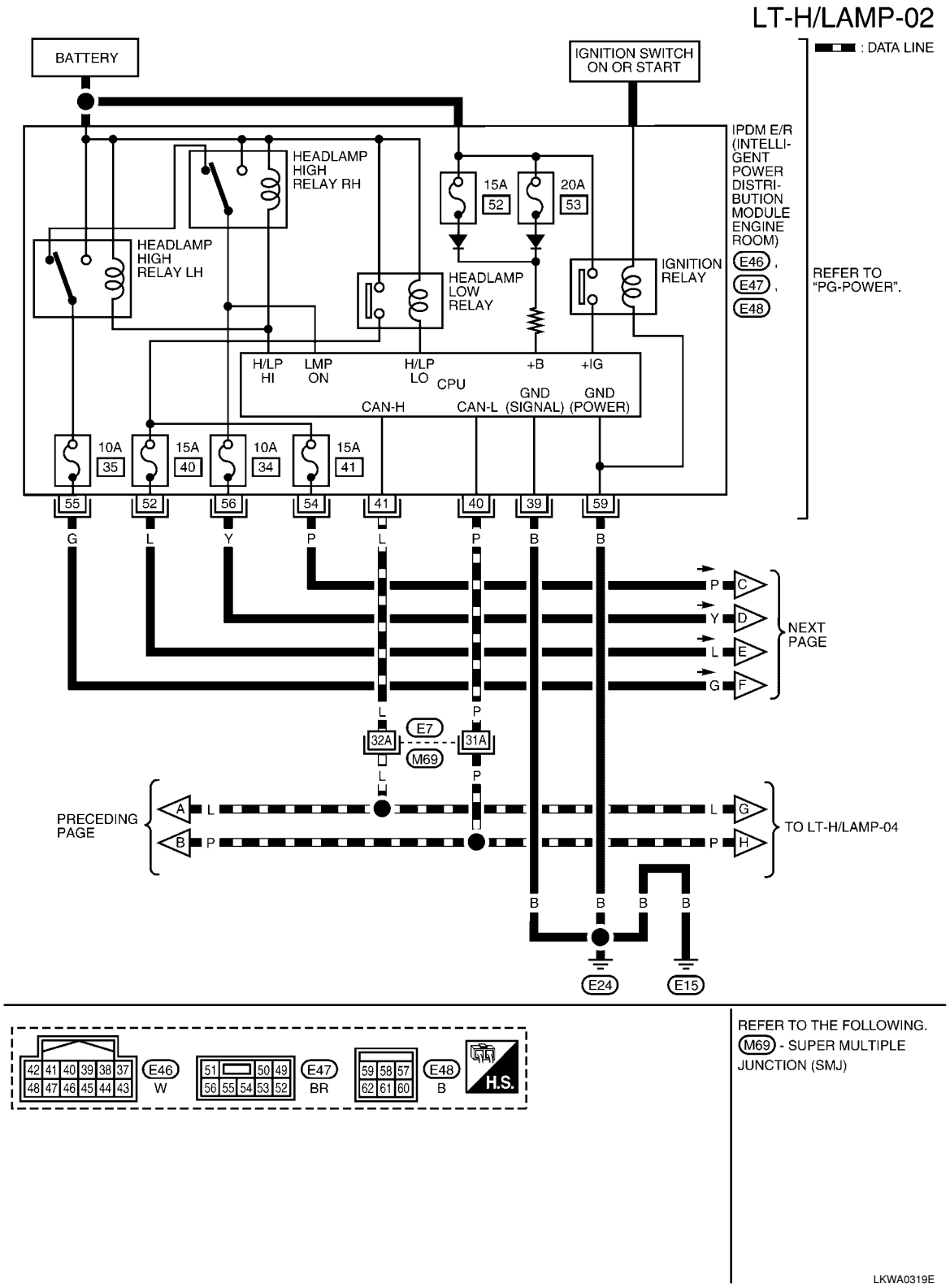
LT-H/LAMP-02
: DATA LINE
BATTERY
IGNITION SWITCH ON OR START
IPDM E/R (INTELLI-GENT POWER DISTRI-BUTION MODULE ENGINE ROOM)
E46, E47, E48
REFER TO "PG-POWER".
HEADLAMP HIGH RELAY RH
HEADLAMP HIGH RELAY LH
HEADLAMP LOW RELAY
IGNITION RELAY
15A 52
20A 53
H/LP HI
LMP ON
H/LP LO
CPU
+B
+IG
CAN-H
CAN-L
GND (SIGNAL)
GND (POWER)
10A 35
15A 40
10A 34
15A 41
55 52 56 54 41 40 39 59
G L Y P L P B B
NEXT PAGE
E7
M69
32A 31A
PRECEDING PAGE
TO LT-H/LAMP-04
E24
E15
E46 W
E47 BR
E48 B
H.S.
REFER TO THE FOLLOWING.
M69 - SUPER MULTIPLE JUNCTION (SMJ)
LKWA0319E

LT-H/LAMP-03

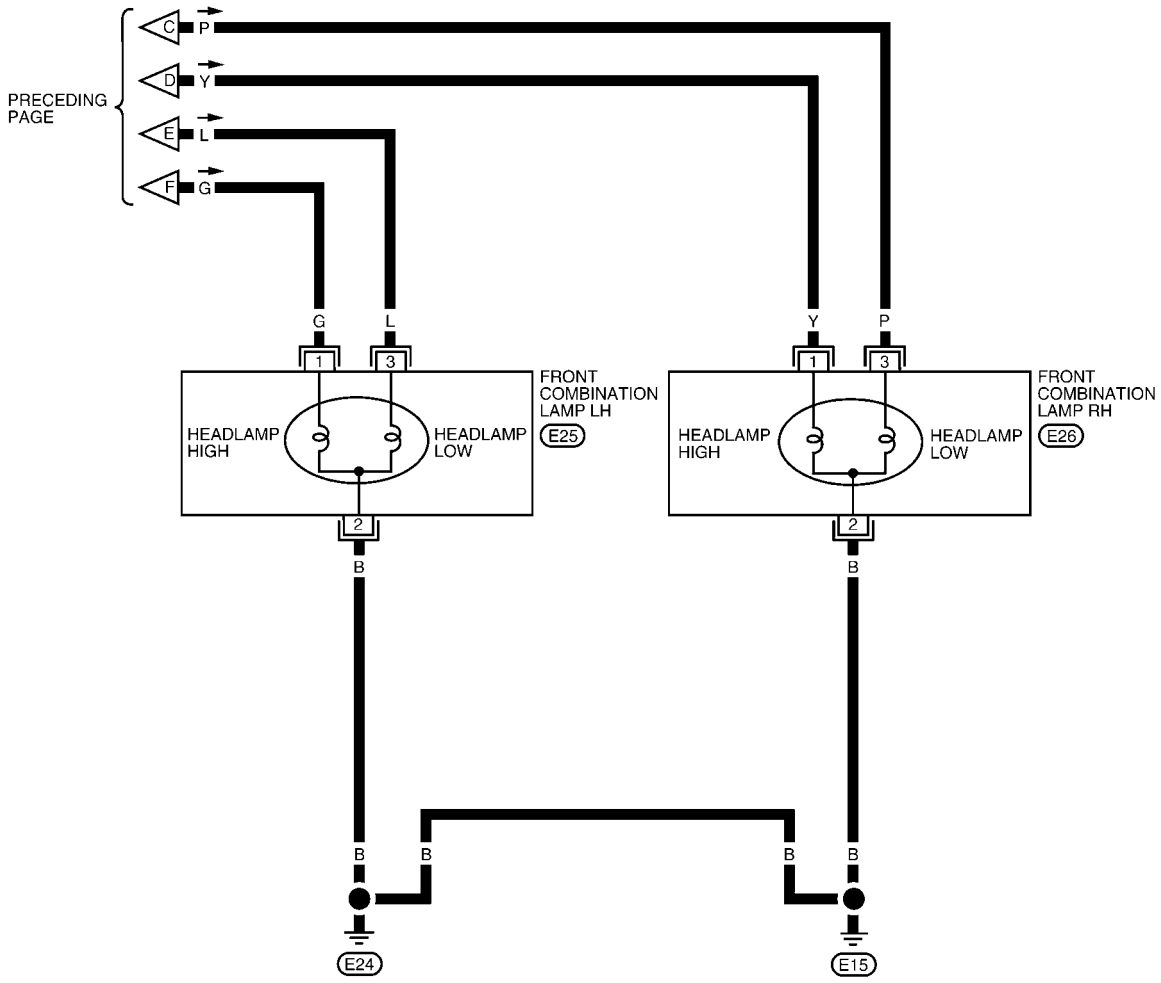

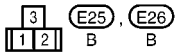

LKWA0320E

LT-H/LAMP-04

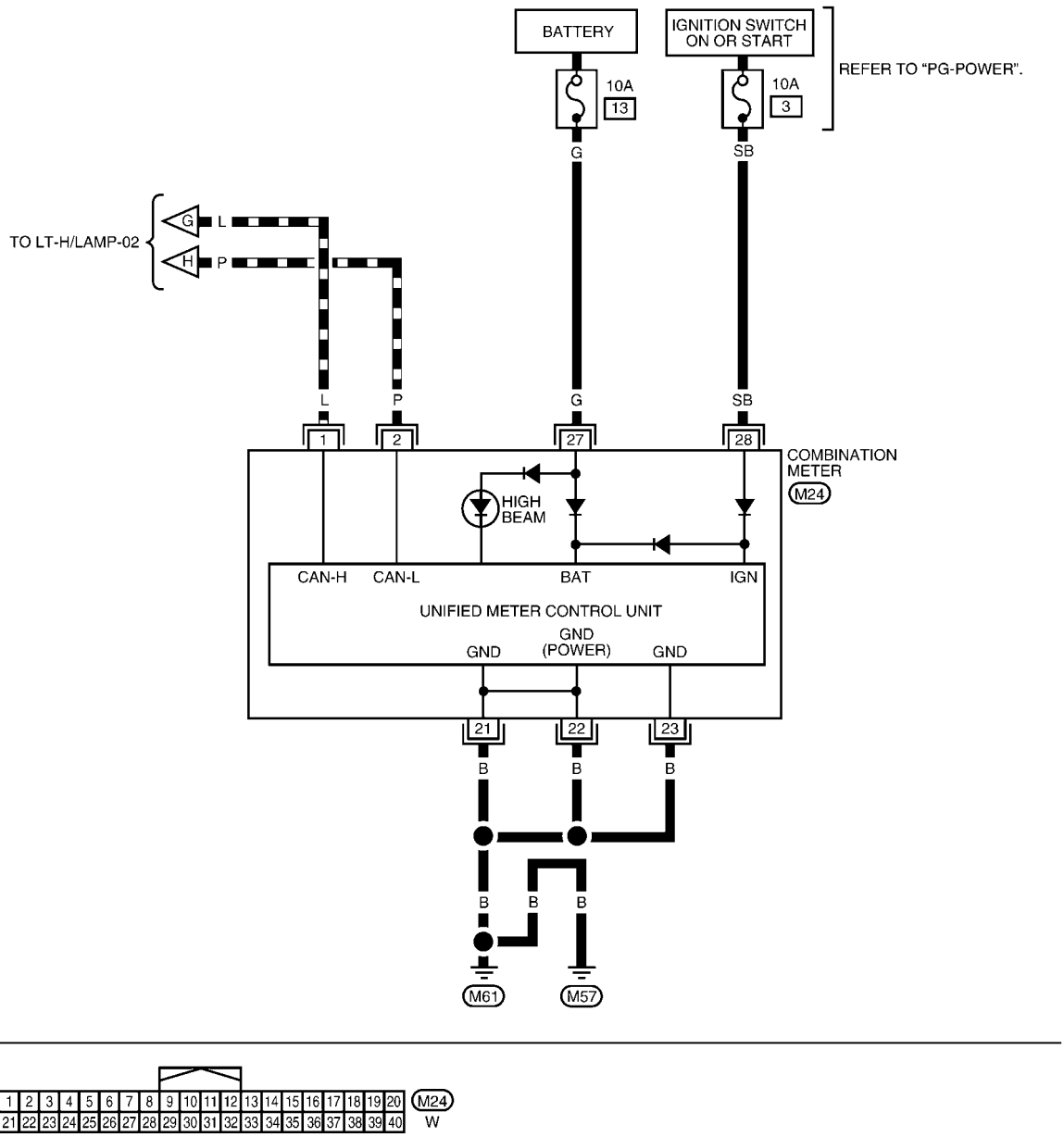

LKWA0321E

Terminal and Reference Value for BCM

INFOID:0000000001704365

Refer to BCS-11, "Terminal and Reference Value for BCM" .

Terminal and Reference Value for IPDM E/R

INFOID:0000000001704366

Refer to PG-23, "Terminal and Reference Value for IPDM E/R" .

How to Perform Trouble Diagnosis

INFOID:0000000001704367

1. Confirm the symptom or customer complaint.
2. Understand operation, description and function description. Refer to LT-4, "System Description" .
3. Perform the Preliminary Check. Refer to LT-11, "Preliminary Check" .
4. Check symptom and repair or replace the cause of the malfunction.
5. Do the headlamps operate normally? If YES, GO TO 6. If NO, GO TO 4.
6. INSPECTION END

Preliminary Check

INFOID:0000000001704368

CHECK POWER SUPPLY AND GROUND CIRCUIT FOR BCM

Refer to BCS-15, "BCM Power Supply and Ground Circuit Inspection" .

CHECK POWER SUPPLY AND GROUND CIRCUIT FOR IPDM E/R

Refer to PG-25, "IPDM E/R Power/Ground Circuit Inspection" .

CONSULT-III Function (BCM)

INFOID:0000000001704369

CONSULT-III can display each diagnostic item using the diagnostic test modes shown following.

BCM diagnostic test item	Diagnostic mode	Description
Inspection by part	WORK SUPPORT	Supports inspections and adjustments. Commands are transmitted to the BCM for setting the status suitable for required operation, input/output signals are received from the BCM and received data is displayed.
	DATA MONITOR	Displays BCM input/output data in real time.
	ACTIVE TEST	Operation of electrical loads can be checked by sending drive signal to them.
	SELF-DIAG RESULTS	Displays BCM self-diagnosis results.
	CAN DIAG SUPPORT MNTR	The result of transmit/receive diagnosis of CAN communication can be read.
	ECU PART NUMBER	BCM part number can be read.
	CONFIGURATION	Performs BCM configuration read/write functions.

WORK SUPPORT

Display Item List

Item	Description	CONSULT-III	Factory setting
BATTERY SAVER SET	Exterior lamp battery saver control mode can be changed in this mode. Selects exterior lamp battery saver control mode between ON/OFF.	ON	×
		OFF	—

DATA MONITOR

Display Item List

Monitor item		Contents
IGN ON SW	"ON/OFF"	Displays "IGN position (ON)/OFF, ACC position (OFF)" judged from the ignition switch signal.
ACC ON SW	"ON/OFF"	Displays "ACC (ON)/OFF, Ignition OFF (OFF)" status judged from ignition switch signal.
HI BEAM SW	"ON/OFF"	Displays status (high beam switch: ON/Others: OFF) of high beam switch judged from lighting switch signal.
HEAD LAMP SW 1	"ON/OFF"	Displays status (headlamp switch 1: ON/Others: OFF) of headlamp switch 2 judged from lighting switch signal.
HEAD LAMP SW 2	"ON/OFF"	Displays status (headlamp switch 2: ON/Others: OFF) of headlamp switch 2 judged from lighting switch signal.

Monitor item		Contents
LIGHT SW 1ST	"ON/OFF"	Displays status (lighting switch 1st position: ON/Others: OFF) of lighting switch judged from lighting switch signal.
PASSING SW	"ON/OFF"	Displays status (flash-to-pass switch: ON/Others: OFF) of flash-to-pass switch judged from lighting switch signal.
FR FOG SW	"ON/OFF"	Displays status (front fog lamp switch: ON/Others: OFF) of front fog lamp switch judged from lighting switch signal.
DOOR SW - DR	"ON/OFF"	Displays status of the front door LH as judged from the front door switch LH signal. (Door is open: ON/Door is closed: OFF)
DOOR SW - AS	"ON/OFF"	Displays status of the front door RH as judged from the front door switch RH signal. (Door is open: ON/Door is closed: OFF)
DOOR SW - RR	"ON/OFF"	Displays status of the rear door as judged from the rear door switch (RH) signal. (Door is open: ON/Door is closed: OFF)
DOOR SW - RL	"ON/OFF"	Displays status of the rear door as judged from the rear door switch (LH) signal. (Door is open: ON/Door is closed: OFF)
BACK DOOR SW	"ON/OFF"	Displays status of the back door as judged from the back door switch signal. (Door is open: ON/Door is closed: OFF)
TURN SIGNAL R	"ON/OFF"	Displays status (Turn right: ON/Others: OFF) as judged from lighting switch signal.
TURN SIGNAL L	"ON/OFF"	Displays status (Turn left: ON/Others: OFF) as judged from lighting switch signal.
ENGINE RUN[Note 1]	"ON/OFF"	Displays status (Engine running: ON/Others: OFF) as judged from engine status signal.
PKB SW[Note 1]	"ON/OFF"	Displays status (Parking brake switch: ON/Others: OFF) as judged from parking brake switch signal.

Note 1: Vehicles without daytime light system may display this item, but cannot monitor it.

ACTIVE TEST

Display Item List

Test item	Description
TAIL LAMP	Allows tail lamp relay to operate by switching ON-OFF.
HEAD LAMP	Allows headlamp relay (HI, LO) to operate by switching ON-OFF.
FR FOG LAMP	Allows fog lamp relay to operate by switching ON-OFF.

SELF-DIAGNOSTIC RESULTS

Display Item List

Monitored item	CONSULT-III display	Description
CAN communication	CAN communication [U1000]	Malfunction is detected in CAN communication.
CAN communication system	CAN communication system 1 to 6 [U1000]	Malfunction is detected in CAN system.

CONSULT-III Function (IPDM E/R)

INFOID:0000000001704370

CONSULT-III can display each diagnostic item using the diagnostic test modes shown following.

IPDM E/R diagnostic Mode	Description
SELF-DIAG RESULTS	Displays IPDM E/R self-diagnosis results.
DATA MONITOR	Displays IPDM E/R input/output data in real time.
CAN DIAG SUPPORT MNTR	The result of transmit/receive diagnosis of CAN communication can be read.
ACTIVE TEST	Operation of electrical loads can be checked by sending drive signal to them.

DATA MONITOR

All Items, Main Items, Select Item Menu

Item name	CONSULT-III screen display	Display or unit	Monitor item selection			Description
			ALL SIGNALS	MAIN SIGNALS	SELECTION FROM MENU	
Parking, license plate and tail lamps request	TAIL&CLR REQ	ON/OFF	×	×	×	Signal status input from BCM
Headlamp low beam request	HL LO REQ	ON/OFF	×	×	×	Signal status input from BCM
Headlamp high beam request	HL HI REQ	ON/OFF	×	×	×	Signal status input from BCM
Front fog lamps request	FR FOG REQ	ON/OFF	×	×	×	Signal status input from BCM
Daytime light request	DTRL REQ	ON/OFF	x	x	x	Signal status input from BCM

NOTE:
Perform monitoring of IPDM E/R data with the ignition switch ON. When the ignition switch is at ACC, the display may not be correct.

ACTIVE TEST

Test item	CONSULT-III screen display	Description
Tail lamp relay output	TAIL LAMP	Allows tail lamp relay to operate by switching operation ON-OFF at your option.
Headlamp relay (HI, LO) output	LAMPS	Allows headlamp relay (HI, LO) to operate by switching operation (OFF, HI, LO) at your option (Head lamp high beam repeats ON-OFF every 1 second).
Front fog lamp relay (FOG) output		Allows fog lamp relay (FOG) to operate by switching operation ON-OFF at your option.

Headlamp High Beam Does Not Illuminate (Both Sides)

INFOID:0000000001704371

1. CHECK COMBINATION SWITCH INPUT SIGNAL

With CONSULT-III
1. Select “BCM” on CONSULT-III. Select “HEAD LAMP” on “SELECT TEST ITEM” screen.
2. Select “DATA MONITOR” on “SELECT DIAG MODE” screen. Make sure that “HI BEAM SW” turns ON-OFF linked with operation of lighting switch.

When lighting switch is high position : HI BEAM SW ON

Without CONSULT-III
Refer to LT-63, "Combination Switch Inspection" .

OK or NG
OK >> GO TO 2.
NG >> Check combination switch (lighting switch). Refer to LT-63, "Combination Switch Inspection" .

2. HEADLAMP ACTIVE TEST

With CONSULT-III
1. Select “IPDM E/R” on CONSULT-III. Select “ACTIVE TEST” on “SELECT DIAG MODE” screen.
2. Select “EXTERNAL LAMPS” on “SELECT TEST ITEM” screen.
3. Touch “HI” screen.
4. Make sure headlamp high beam operates.

Headlamp high beam should operate (Headlamp high beam repeats ON–OFF every 2 seconds).

Without CONSULT-III
1. Start auto active test. Refer to PG-19, "Auto Active Test" .
2. Make sure headlamp high beam operates.

Headlamp high beam should operate.

OK or NG

OK >> GO TO 3.
NG >> GO TO 4.

3. CHECK IPDM E/R

1. Select “IPDM E/R” on CONSULT-III. Select “DATA MONITOR” on “SELECT DIAG MODE” screen.
2. Make sure “HL HI REQ” turns ON when lighting switch is in high position.

When lighting switch is high position : HL HI REQ ON

OK or NG

OK >> Replace IPDM E/R. Refer to PG-26, "Removal and Installation of IPDM E/R" .
NG >> Replace BCM. Refer to BCS-18, "Removal and Installation of BCM" .

4. HEADLAMP HIGH BEAM FUSE INSPECTION

Inspect 10A fuse No. 34 (LH) and fuse No. 35 (RH).

OK or NG

OK >> GO TO 5.
NG >> Repair harness.

5. BULB INSPECTION

Inspect inoperative headlamp bulbs.

OK or NG

OK >> GO TO 6.
NG >> Replace headlamp bulb. LT-22, "Bulb Replacement" .

6. CHECK HEADLAMP INPUT SIGNAL

With CONSULT-III

1. Turn ignition switch OFF.
2. Disconnect headlamp connector.
3. Select “IPDM E/R” on CONSULT-III. Select “ACTIVE TEST” on “SELECT DIAG MODE” screen.
4. Select “EXTERNAL LAMPS” on “SELECT TEST ITEM” screen.
5. Touch “HI” screen.
6. When headlamp high beam is operating, check voltage between headlamp harness connector and ground (Headlamp high beam repeats ON–OFF every 2 seconds).

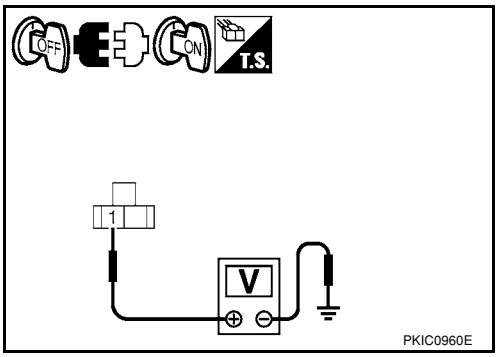

Terminal				Voltage
(+)			(–)	
Headlamp connector		Terminal		
RH	E26	1	Ground	Battery voltage
LH	E25			

Without CONSULT-III

1. Turn ignition switch OFF.
2. Disconnect headlamp connector.
3. Start auto active test. Refer to PG-19, "Auto Active Test" .
4. When headlamp high beam is operating, check voltage between headlamp harness connector and ground.

Terminal			Voltage
(+)		(–)	
Headlamp connector	Terminal		

RH	E26	1	Ground	Battery voltage
LH	E25			

OK or NG

OK >> GO TO 7.
NG >> GO TO 8.

7. CHECK HEADLAMP GROUND CIRCUIT

1. Turn ignition switch OFF.
2. Check continuity between headlamp harness connector and ground.

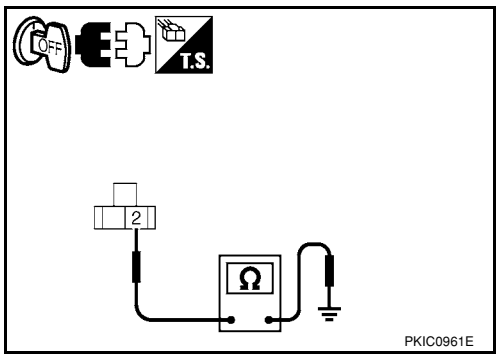

Headlamp connector		Terminal		Continuity
RH	E26	2	Ground	Yes
LH	E25			

OK or NG

OK >> Check front combination lamp connector for damage or poor connection. Repair as necessary.
NG >> Repair harness.

8. CHECK HEADLAMP CIRCUIT

1. Turn ignition switch OFF.
2. Disconnect IPDM E/R connector.
3. Check continuity between IPDM E/R harness connector (A) and headlamp harness connector (B).

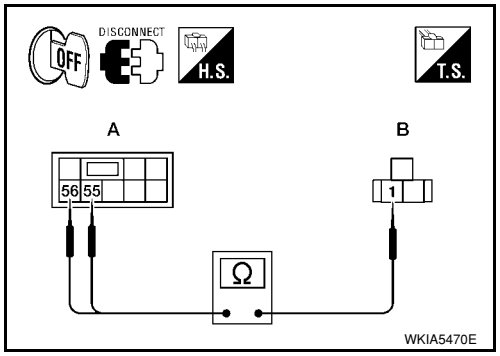

Circuit	A		B		Continuity
	Connector	Terminal	Connector	Terminal	
RH	E47	56	E26	1	Yes
LH		55	E25		

OK or NG

OK >> Replace IPDM E/R. Refer to PG-26, "Removal and Installation of IPDM E/R" .
NG >> Repair harness or connector.

Headlamp High Beam Does Not Illuminate (One Side)

INFOID:0000000001704372

1. HEADLAMP HIGH BEAM FUSE INSPECTION

Inspect 10A fuse No. 34 (LH) or fuse No. 35 (RH).

OK or NG

OK >> GO TO 2.
NG >> Repair harness.

2. CHECK BULB

Check headlamp bulb which does not illuminate.

OK or NG

OK >> GO TO 3.
NG >> Replace bulb. Refer to LT-22, "Bulb Replacement" .

3. CHECK HEADLAMP INPUT SIGNAL

1. Turn ignition switch OFF.
2. Disconnect headlamp connector.
3. Lighting switch is turned to HIGH position.

4. Check voltage between headlamp harness connector and ground.

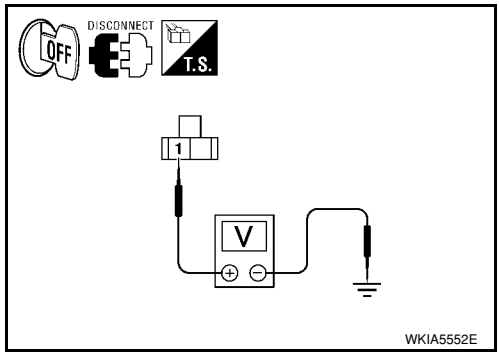

Terminal				Voltage
(+)			(–)	
Headlamp connector		Terminal		
RH	E26	1	Ground	Battery voltage
LH	E25			

OK or NG

OK >> GO TO 4.
NG >> GO TO 5.

4. CHECK HEADLAMP GROUND CIRCUIT

1. Turn ignition switch OFF.
2. Check continuity between headlamp harness connector and ground.

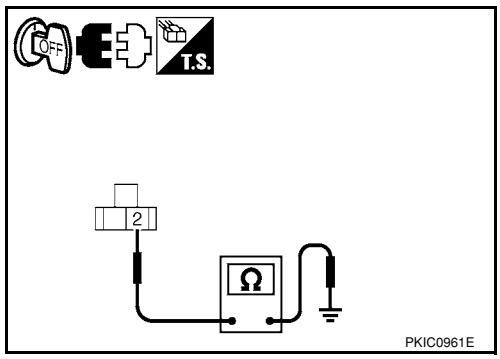

Headlamp connector		Terminal	Ground	Continuity
RH	E26	2	Ground	Yes
LH	E25			

OK or NG

OK >> Check connecting condition headlamp harness connector.
NG >> Repair harness or connector.

5. CHECK HEADLAMP CIRCUIT

1. Turn ignition switch OFF.
2. Disconnect IPDM E/R connector.
3. Check continuity between IPDM E/R harness connector (A) and headlamp harness connector (B).

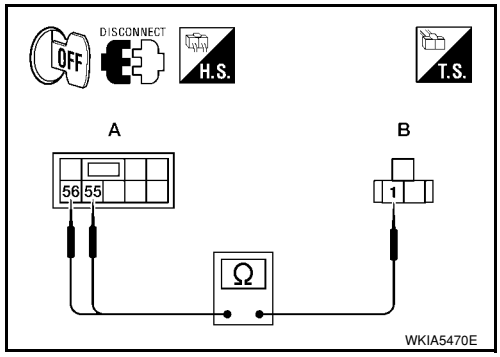

Circuit	A		B		Continuity
	Connector	Terminal	Connector	Terminal	
RH	E47	56	E26	1	Yes
LH		55	E25		

OK or NG

OK >> Replace IPDM E/R. Refer to PG-26, "Removal and Installation of IPDM E/R" .
NG >> Repair harness or connector.

High Beam Indicator Lamp Does Not Illuminate

INFOID:0000000001704373

1. BULB INSPECTION

Inspect CAN communication system. Refer to LAN-6 .

OK or NG

OK >> Replace combination meter. Refer to DI-20, "Removal and Installation" .
NG >> Repair as necessary.

Headlamp Low Beam Does Not Illuminate (Both Sides)

INFOID:0000000001704374

1. CHECK COMBINATION SWITCH INPUT SIGNAL

With CONSULT-III

1. Select “BCM” on CONSULT-III. Select “HEAD LAMP” on “SELECT TEST ITEM” screen.

2. Select “DATA MONITOR” on “SELECT DIAG MODE” screen. Make sure that “HEAD LAMP SW 1” and “HEAD LAMP SW 2” turns ON-OFF linked with operation of lighting switch.

When lighting switch is 2ND position	**: HEAD LAMP SW 1 ON** **: HEAD LAMP SW 2 ON**

Without CONSULT-III
Refer to LT-63, "Combination Switch Inspection" .

OK or NG

OK >> GO TO 2.
NG >> Check combination switch (lighting switch). Refer to LT-63, "Combination Switch Inspection" .

2. CHECK HEADLAMP ACTIVE TEST

With CONSULT-III
1. Select “IPDM E/R” on CONSULT-III. Select “ACTIVE TEST” on “SELECT DIAG MODE” screen.
2. Select “EXTERNAL LAMPS” on “SELECT TEST ITEM” screen.
3. Touch “LO” screen.
4. Make sure headlamp low beam operates.

Headlamp low beam should operate.

Without CONSULT-III
1. Start auto active test. Refer to PG-19, "Auto Active Test" .
2. Make sure headlamp low beam operates.

Headlamp low beam should operate.

OK or NG

OK >> GO TO 3.
NG >> GO TO 4.

3. CHECK IPDM E/R

1. Select “IPDM E/R” on CONSULT-III. Select “DATA MONITOR” on “SELECT DIAG MODE” screen.
2. Make sure “HL LO REQ” turns ON when lighting switch is in 2ND position.

When lighting switch is 2ND position	**: HL LO REQ ON**

OK or NG

OK >> Replace IPDM E/R. Refer to PG-26, "Removal and Installation of IPDM E/R" .
NG >> Replace BCM. Refer toBCS-18, "Removal and Installation of BCM" .

4. HEADLAMP LOW BEAM FUSE INSPECTION

Inspect 15A fuse No. 40 (LH) and fuse No. 41 (RH).

OK or NG

OK >> GO TO 5.
NG >> Repair harness.

5. BULB INSPECTION

Inspect inoperative headlamp bulbs.

OK or NG

OK >> GO TO 6.
NG >> Replace headlamp bulb.LT-22, "Bulb Replacement" .

6. CHECK HEADLAMP INPUT SIGNAL

With CONSULT-III
1. Turn ignition switch OFF.
2. Disconnect headlamp connector.
3. Select “IPDM E/R” on CONSULT-III. Select “ACTIVE TEST” on “SELECT DIAG MODE” screen.
4. Select “EXTERNAL LAMPS” on “SELECT TEST ITEM” screen.

5. Touch “LO” screen.
6. When headlamp low beam is operating, check voltage between headlamp harness connector and ground.

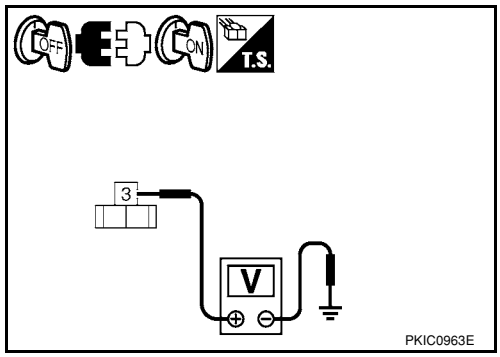

Terminal				Voltage
(+)			(–)	
Headlamp connector		Terminal		
RH	E26	3	Ground	Battery voltage
LH	E25			

Without CONSULT-III
1. Turn ignition switch OFF.
2. Disconnect headlamp connector.
3. Start auto active test. Refer to PG-19, "Auto Active Test" .
4. When headlamp low beam is operating, check voltage between headlamp harness connector and ground.

Terminal				Voltage
(+)			(–)	
Headlamp connector		Terminal		
RH	E26	3	Ground	Battery voltage
LH	E25			

OK or NG

OK >> GO TO 7.
NG >> GO TO 8.

7. CHECK HEADLAMP GROUND CIRCUIT

1. Turn ignition switch OFF.
2. Check continuity between headlamp harness connector (B) and ground.

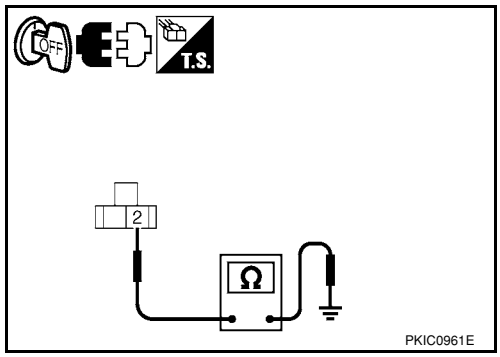

Headlamp connector		Terminal	Ground	Continuity
RH	E26	2		Yes
LH	E25			

OK or NG

OK >> Check front combination lamp connector for damage or poor connection. Repair as necessary.
NG >> Repair harness.

8. CHECK HEADLAMP CIRCUIT

1. Turn ignition switch OFF.
2. Disconnect IPDM E/R connector.
3. Check continuity between IPDM E/R harness connector (A) and headlamp harness connector (B).

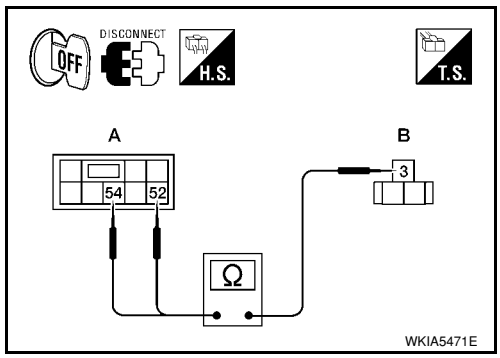

Circuit	A		B		Continuity
	Connector	Terminal	Connector	Terminal	
RH	E47	54	E26	3	Yes
LH		52	E25		

OK or NG

OK >> Replace IPDM E/R. Refer to PG-26, "Removal and Installation of IPDM E/R" .
NG >> Repair harness or connector.

Headlamp Low Beam Does Not Illuminate (One Side)

INFOID:0000000001704375

1. HEADLAMP LOW BEAM FUSE INSPECTION

Inspect 15A fuse No. 40 (LH) and fuse No. 41 (RH).

OK or NG

OK >> GO TO 2.
NG >> Repair harness.

2. CHECK BULB

Check bulb of headlamp which does not illuminate.

OK or NG

OK >> GO TO 3.
NG >> Replace bulb. Refer to LT-22, "Bulb Replacement" .

3. CHECK HEADLAMP INPUT SIGNAL

1. Turn ignition switch OFF.
2. Disconnect headlamp connector.
3. Lighting switch is turned to 2ND position.
4. Check voltage between headlamp harness connector and ground.

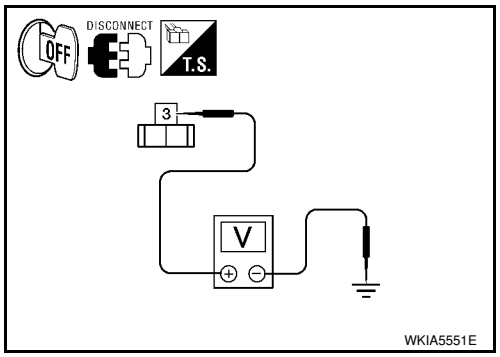

Terminal				Voltage
(+)			(–)	
Headlamp connector		Terminal		
RH	E26	3	Ground	Battery voltage
LH	E25			

OK or NG

OK >> GO TO 4.
NG >> GO TO 5.

4. CHECK HEADLAMP GROUND CIRCUIT

1. Turn ignition switch OFF.
2. Check continuity between headlamp harness connector and ground.

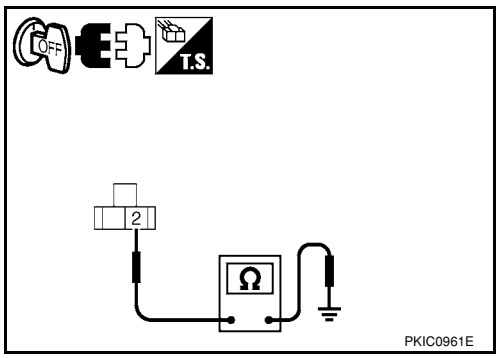

Headlamp connector		Terminal		Continuity
RH	E26	2	Ground	Yes
LH	E25			

OK or NG

OK >> Check condition of headlamp harness connector.
NG >> Repair harness or connector.

5. CHECK HEADLAMP CIRCUIT

1. Turn ignition switch OFF.
2. Disconnect IPDM E/R connector.

3. Check continuity between IPDM E/R harness connector (A) and headlamp harness connector (B).

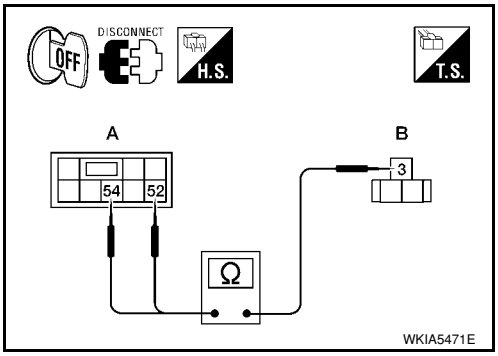

Circuit	A		B		Continuity
	Connector	Terminal	Connector	Terminal	
RH	E47	54	E26	3	Yes
LH		52	E25		

OK or NG

OK >> Replace IPDM E/R. Refer to PG-25, "IPDM E/R Power/ Ground Circuit Inspection" .

NG >> Repair harness or connector.

Headlamps Do Not Turn OFF

INFOID:0000000001704376

1. CHECK HEADLAMPS TURN OFF

Make sure that lighting switch is OFF. Make sure headlamp turns OFF when ignition switch is turned OFF.

OK or NG

OK >> GO TO 3.

NG >> GO TO 2.

2. CHECK COMBINATION SWITCH INPUT SIGNAL

1. Select “BCM” on CONSULT-III. Select “HEAD LAMP” on “SELECT TEST ITEM” screen.
2. Select “DATA MONITOR” on “SELECT DIAG MODE” screen. Make sure that “HEAD LAMP SW 1” and “HEAD LAMP SW 2” turns ON-OFF linked with operation of lighting switch.

When lighting switch is OFF position	**: HEAD LAMP SW 1 OFF**
	: HEAD LAMP SW 2 OFF

OK or NG

OK >> Replace IPDM E/R. Refer to PG-26, "Removal and Installation of IPDM E/R" .

NG >> Check combination switch (lighting switch). Refer to LT-63, "Combination Switch Inspection" .

3. CHECKING CAN COMMUNICATIONS BETWEEN BCM AND IPDM E/R

Select “BCM” on CONSULT-III, and perform self-diagnosis for “BCM”.

Display of self-diagnosis results

NO DTC>> Replace IPDM E/R. Refer to PG-26, "Removal and Installation of IPDM E/R".

CAN COMM CIRCUIT>> Refer to LAN-6, "System Description".

Aiming Adjustment

INFOID:0000000001704377

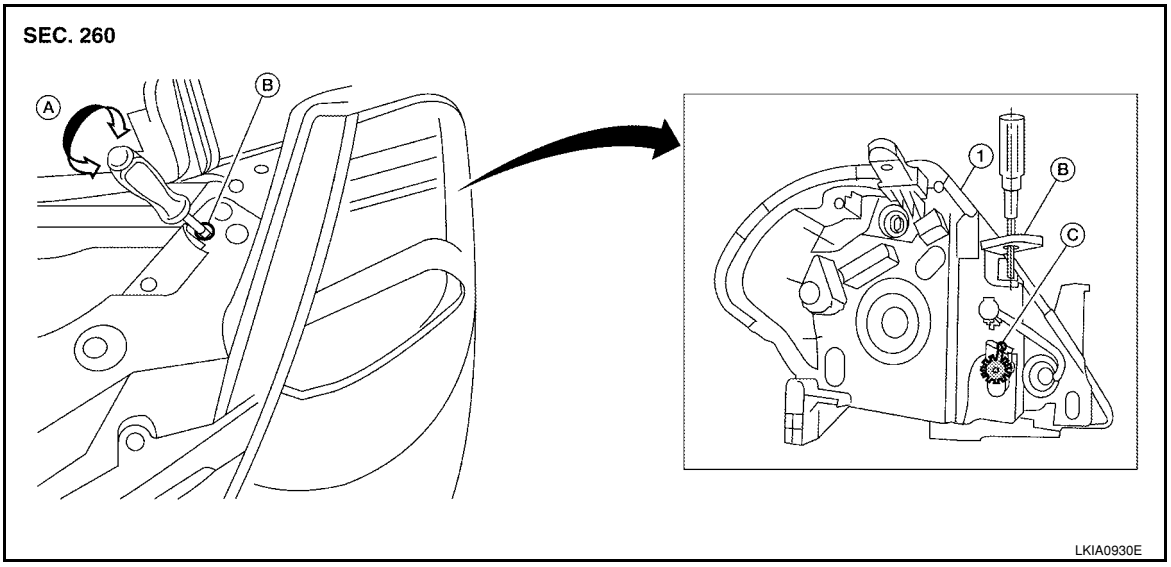

1. Headlamp
A. Inner and outer adjustment
B. Adjusting screw access hole
C. Adjusting screw

PREPARATION BEFORE ADJUSTING

Before performing aiming adjustment, check the following.

1. Keep all tires inflated to correct pressures.
2. Place vehicle on level surface.
3. See that there is no-load in vehicle other than the driver (or equivalent weight placed in driver's position). Coolant, engine oil filled up to correct level and full fuel tank, spare tire, jack and tools are properly stowed.

LOW BEAM AND HIGH BEAM

1. Turn headlamp low beam ON.
2. Use adjusting screw to perform aiming adjustment.
3. Insert the tool through the adjusting screw access hole to avoid damage to the adjusting screw.

ADJUSTMENT USING AN ADJUSTMENT SCREEN (LIGHT/DARK BORDERLINE)

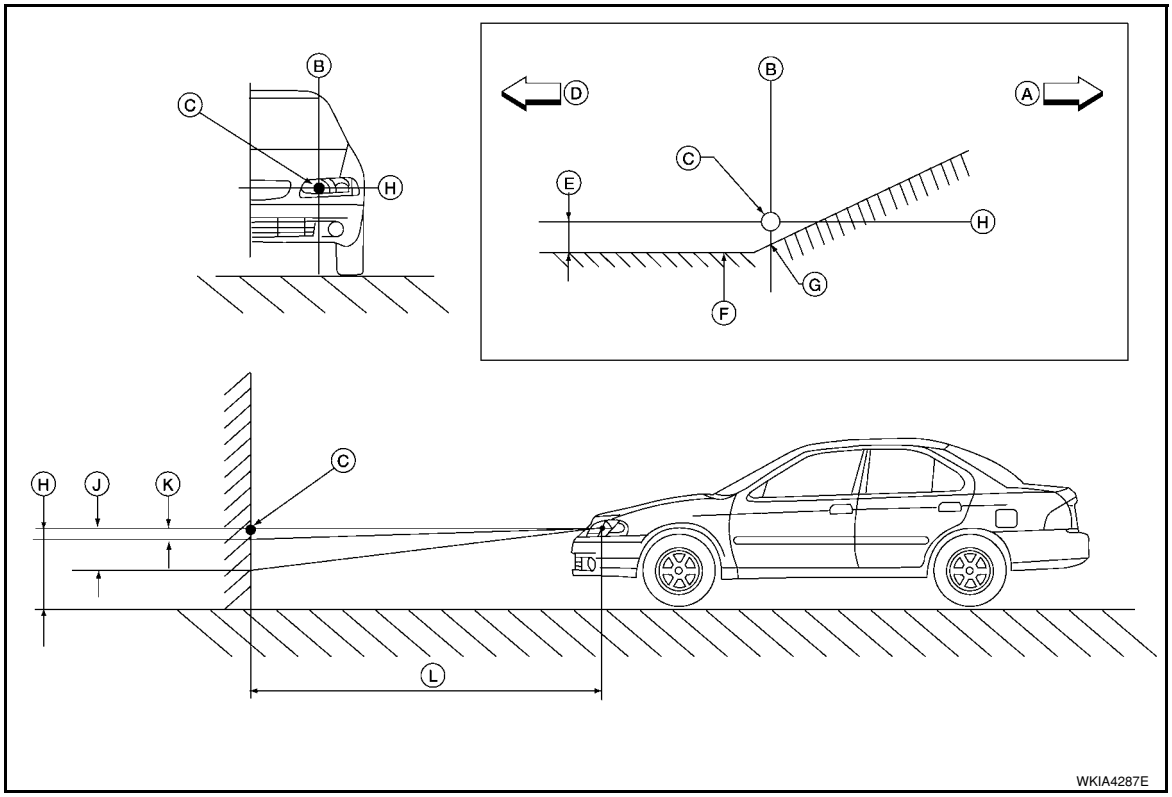

A.	Right	B.	Vertical center line of headlamp	C.	Horizontal aiming center line of headlamp
D.	Left	E.	Vertical aiming cutoff point	F.	Cutoff line for vertical aiming evaluation
G.	Acceptable vertical cutoff setting at horizontal aiming point	H.	Horizontal center line of headlamp	J.	Maximum acceptable vertical aiming point
K.	Minimum acceptable vertical aiming point	L.	Aiming distance from center of headlamp to aiming screen		

- Aim each headlamp individually and ensure other headlamp beam pattern is blocked from screen.
- For vertical headlamp aiming, adjust headlamp until beam pattern is positioned per specified dimensions.

Description	Halogen Headlamp
Vertical aiming cutoff point (E)	53.2 mm (2.094 in)
Minimum acceptable vertical aiming point (K)	13.3 mm (0.52 in)
Maximum acceptable vertical aiming point (J)	93.1 mm (3.67 in)
Aiming distance from center of headlamp to aiming screen (L)	7.62 m (25 ft)

Bulb Replacement

INFOID:0000000001704378

CAUTION:
After installing bulb, be sure to install plastic cap and bulb socket securely to ensure watertightness.

HEADLAMP (HIGH/LOW)

1. Turn lighting switch OFF.
2. Remove the headlamp. Refer to LT-23, "Removal and Installation".
3. Remove back cover.
4. Unlock retaining spring and remove bulb from headlamp.

PARKING (CLEARANCE) LAMP

1. Turn lighting switch OFF.

2. Remove the headlamp. Refer to LT-23, "Removal and Installation".
3. Turn bulb socket counterclockwise and unlock it.
4. Remove bulb from its socket.

FRONT TURN SIGNAL LAMP

1. Turn lighting switch OFF.
2. Remove the headlamp. Refer to LT-23, "Removal and Installation".
3. Turn bulb socket counterclockwise and unlock it.
4. Remove bulb from its socket.

Removal and Installation

INFOID:0000000001704379

REMOVAL

1. Disconnect the negative battery terminal.
2. Remove front bumper fascia. Refer to EI-14.
3. Remove headlamp bolts (A).
4. Pull headlamp (1) toward the vehicle front, disconnect connector, and remove headlamp.

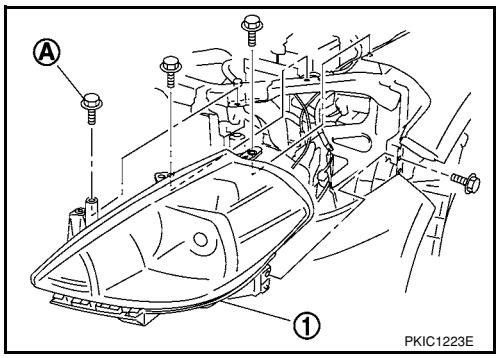

INSTALLATION

Installation is in the reverse order of removal.

- After installation, perform aiming adjustment. Refer to LT-21, "Aiming Adjustment".

Disassembly and Assembly

INFOID:0000000001704380

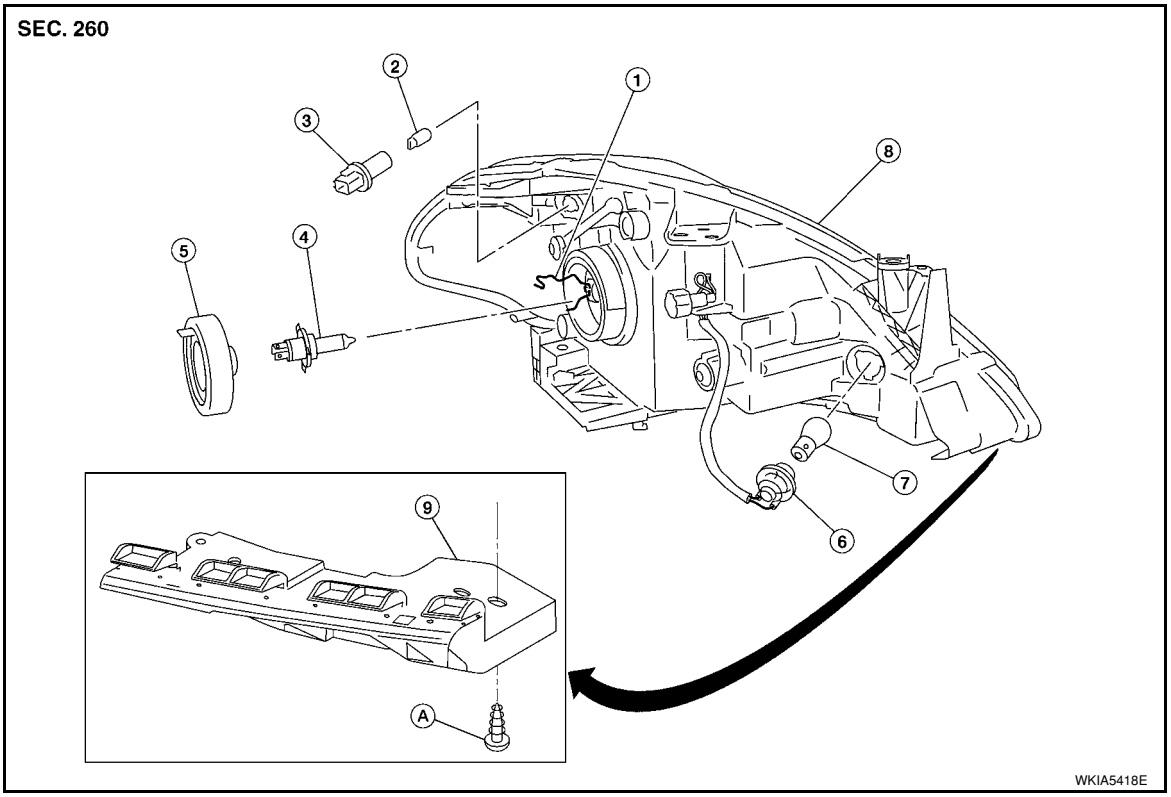

1. Retaining spring
2. Parking (clearance) lamp bulb
3. Parking (clearance) lamp bulb socket
4. Halogen bulb (High/Low)
5. Back cover
6. Front turn signal lamp bulb socket
7. Front turn signal lamp bulb
8. Headlamp housing assembly
9. Bumper stay

A. Screw

DISASSEMBLY

1. Remove back cover.
2. Unlock retaining spring and remove bulb (High/Low).
3. Turn parking (clearance) lamp bulb socket counterclockwise and unlock it.
4. Remove parking (clearance) lamp bulb from its socket.
5. Turn front turn signal lamp bulb socket counterclockwise and unlock it.
6. Remove front turn signal lamp bulb from its socket.
7. Remove the bumper stay.

ASSEMBLY

Assembly is in the reverse order of disassembly.

CAUTION:

- **After installing bulb, be sure to install plastic cap securely to insure water tight seal.**

HEADLAMP (FOR CANADA) - DAYTIME LIGHT SYSTEM -

Component Parts and Harness Connector Location

INFOID:0000000001704381

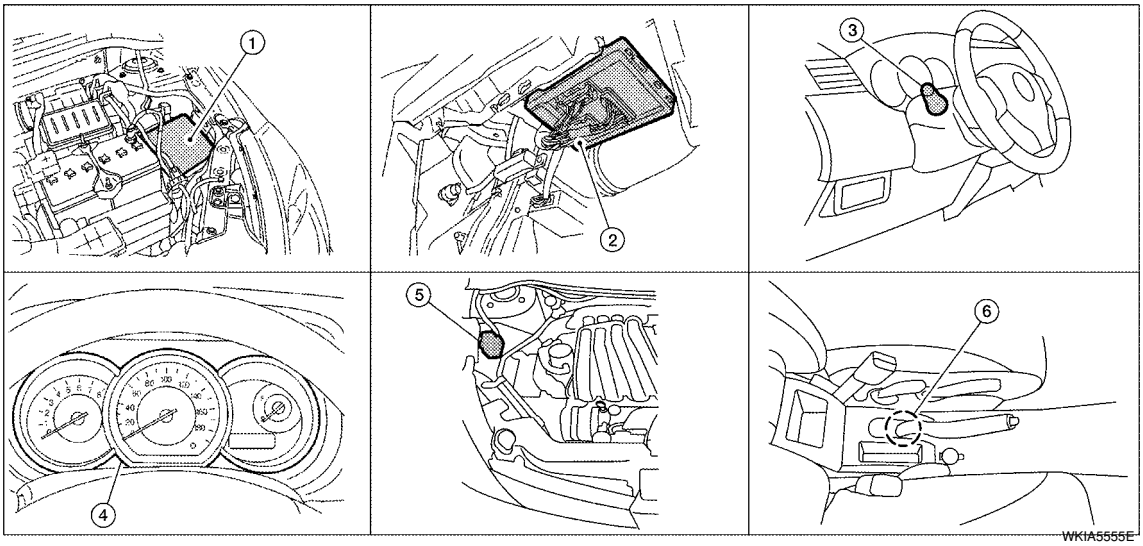

1. IPDM E/R E43, E46, E47 and E48	2. BCM M18 and M20 (view with glove box removed)	3. Combination switch (lighting switch) M28
4. Combination meter M24	5. Daytime light relay 1 E37 and daytime light relay 2 E38	6. Parking brake switch M17

System Description

INFOID:0000000001704382

Headlamp operation is controlled by the BCM (body control module) based on inputs from the combination switch (lighting switch). When the lighting switch is placed in the 2ND position, the BCM receives an input signal requesting the headlamps (and tail lamps) illuminate. The request is then communicated to the IPDM E/R (intelligent power distribution module engine room) via the CAN communication lines. The CPU (central processing unit) located in the IPDM E/R controls ground for the headlamp high and headlamp low relay coils. These relays direct power to the respective headlamps, which then illuminate. When the headlamp switch is OFF or in the 1ST position (parking lamps ON), the parking brake is released and the engine is running, the IPDM E/R de-energizes the headlamp relays and supplies ground to the daytime light relay 1 to actuate the daytime light function.

OUTLINE

Power is supplied at all times
- to headlamp high relay RH and LH (located in IPDM E/R)
- to headlamp low relay (located in IPDM E/R) and
- to ignition relay (located in IPDM E/R)
- through 15A fuse (No. 52, located in IPDM E/R) and
- through 20A fuse (No. 53, located in IPDM E/R)
- to CPU located in IPDM E/R,
- through 40A fusible link (letter **g** , located in fuse and fusible link box)
- to BCM terminal 70,
- through 10A fuse [No. 8, located in fuse block (J/B)]
- to BCM terminal 57,
- through 10A fuse [No. 13, located in fuse block (J/B)]
- to combination meter terminal 27,
- through 10A fuse (No. 26, located in fuse and fusible link box)
- to the daytime light relay 1.

With the ignition switch in the ON or START position, power is supplied
- to the ignition relay (located in IPDM E/R),
- through 10A fuse [No. 6, located in fuse block (J/B)]
- to BCM terminal 38,

- through 10A fuse [No. 3, located in fuse block (J/B)]
- to combination meter terminal 28.

With the ignition switch in the ACC or ON position, power is supplied
- through 10A fuse [No. 20, located in fuse block (J/B)]
- to BCM terminal 11.

Ground is supplied
- to BCM terminal 67 and
- to combination meter terminals 21, 22 and 23
- through grounds M57 and M61,
- to IPDM E/R terminals 39 and 59
- through grounds E15 and E24,

HEADLAMP OPERATION

Low Beam Operation

With the lighting switch in 2ND position, the BCM receives an input signal requesting the headlamps to illuminate. This input signal is communicated to the IPDM E/R via the CAN communication lines. The CPU located in the IPDM E/R controls the headlamp low relay coil, which when energized, directs power
- through 15A fuse (No. 41, located in IPDM E/R)
- through IPDM E/R terminal 54
- to daytime light relay 2 terminals 1 and 5 (energizing the relay),
- through daytime light relay 2 terminal 3
- to front combination lamp RH terminal 3, and
- through 15A fuse (No. 40, located in IPDM E/R)
- through IPDM E/R terminal 52
- to front combination lamp LH terminal 3.

Ground is supplied
- to front combination lamp LH terminal 2
- through grounds E15 and E24,
- to headlamp RH terminal 2 via
- daytime light relay 1 terminals 3 and 4
- through grounds E15 and E24.

With power and ground supplied, low beam headlamps illuminate.

High Beam/Flash-to-Pass Operation

With the lighting switch in 2ND position and high beam switch in the HIGH position, the BCM receives input signal requesting the headlamp high beams to illuminate. The flash-to-pass feature can be used any time and also sends a signal to the BCM. This input signal is communicated to the IPDM E/R and the combination meter via the CAN communication lines. The CPU located in the IPDM E/R controls the headlamp high relay coil, which when energized, directs power
- through 10A fuse (No. 34, located in IPDM E/R)
- through IPDM E/R terminal 56
- to front combination lamp RH terminal 1, and
- through 10A fuse (No. 35, located in IPDM E/R)
- through IPDM E/R terminal 55
- to front combination lamp LH terminal 1.

Ground is supplied
- to front combination lamp LH terminal 2
- through grounds E15 and E24, and
- to front combination lamp RH terminal 2 via
- daytime light relay 1 terminals 3 and 4
- through grounds E15 and E24.

With power and ground supplied, the high beam headlamps illuminate.
The BCM sends a signal to the combination meter requesting the high beam indicator lamp to turn ON.

Daytime Light System Operation

With the lighting switch in the OFF or 1ST position (parking lamps ON), the BCM receives inputs requesting the headlights off. If the parking brake is released and the engine is running, the BCM then sends a signal, via the CAN communication lines, requesting the IPDM E/R to activate the daytime light system. The CPU located in the IPDM E/R controls the daytime light relay 1 coil, which when energized, directs power
- from daytime light relay 1 terminal 3
- to front combination lamp RH terminal 2,
- through front combination lamp RH high beam terminal 1

- to IPDM E/R terminal 56,
- through 10A fuse (No. 34, located in IPDM E/R) and
- through both de-energized headlamp high relays
- to 10A fuse (No. 35, located in IPDM E/R),
- through IPDM E/R terminal 55
- to front combination lamp LH terminal high beam 1.

Ground is supplied

- to front combination lamp LH terminal 2
- through grounds E15 and E24,
- to daytime light relay 1 terminal 1
- through IPDM E/R terminal 6.

With power and ground supplied, high beam headlamps illuminate at reduced intensity.

COMBINATION SWITCH READING FUNCTION

Refer to BCS-3, "System Description" .

EXTERIOR LAMP BATTERY SAVER CONTROL

Refer to LT-72, "System Description" .

CAN Communication System Description

INFOID:0000000001704383

Refer to LAN-6, "System Description" .

Schematic

INFOID:0000000001704384

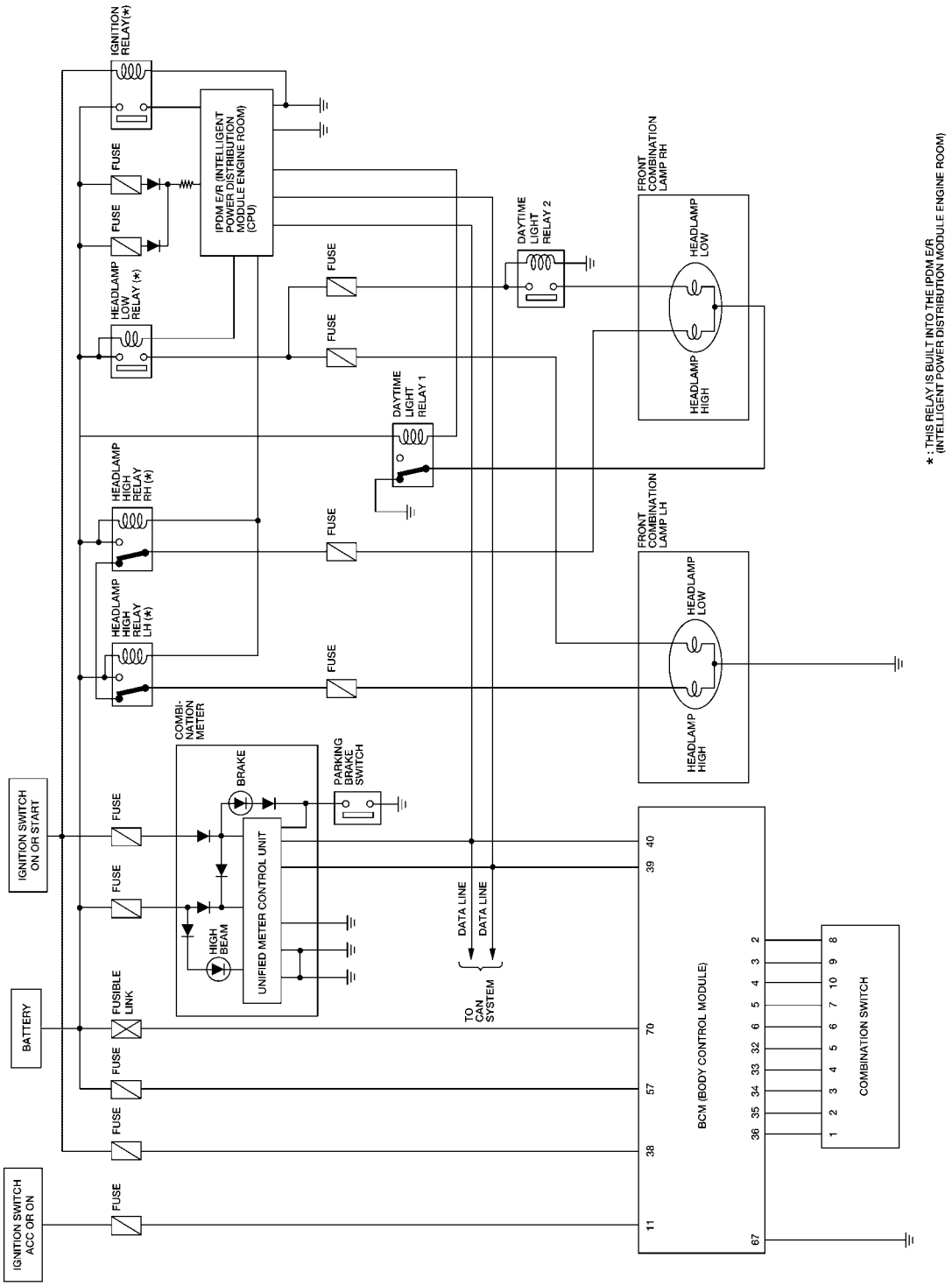

WKWA4972E

Wiring Diagram - DTRL -

INFOID:0000000001704385

LT-DTRL-01

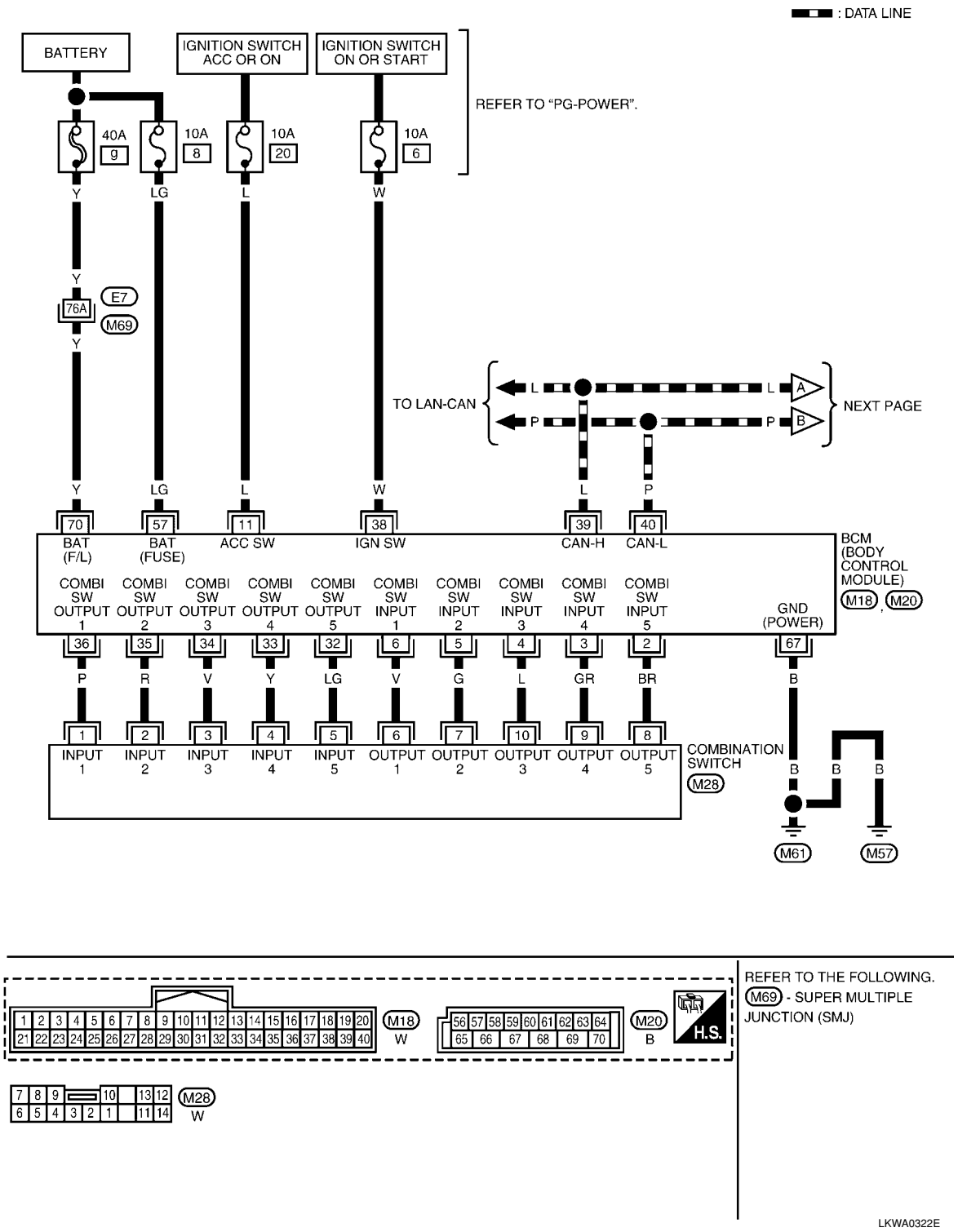

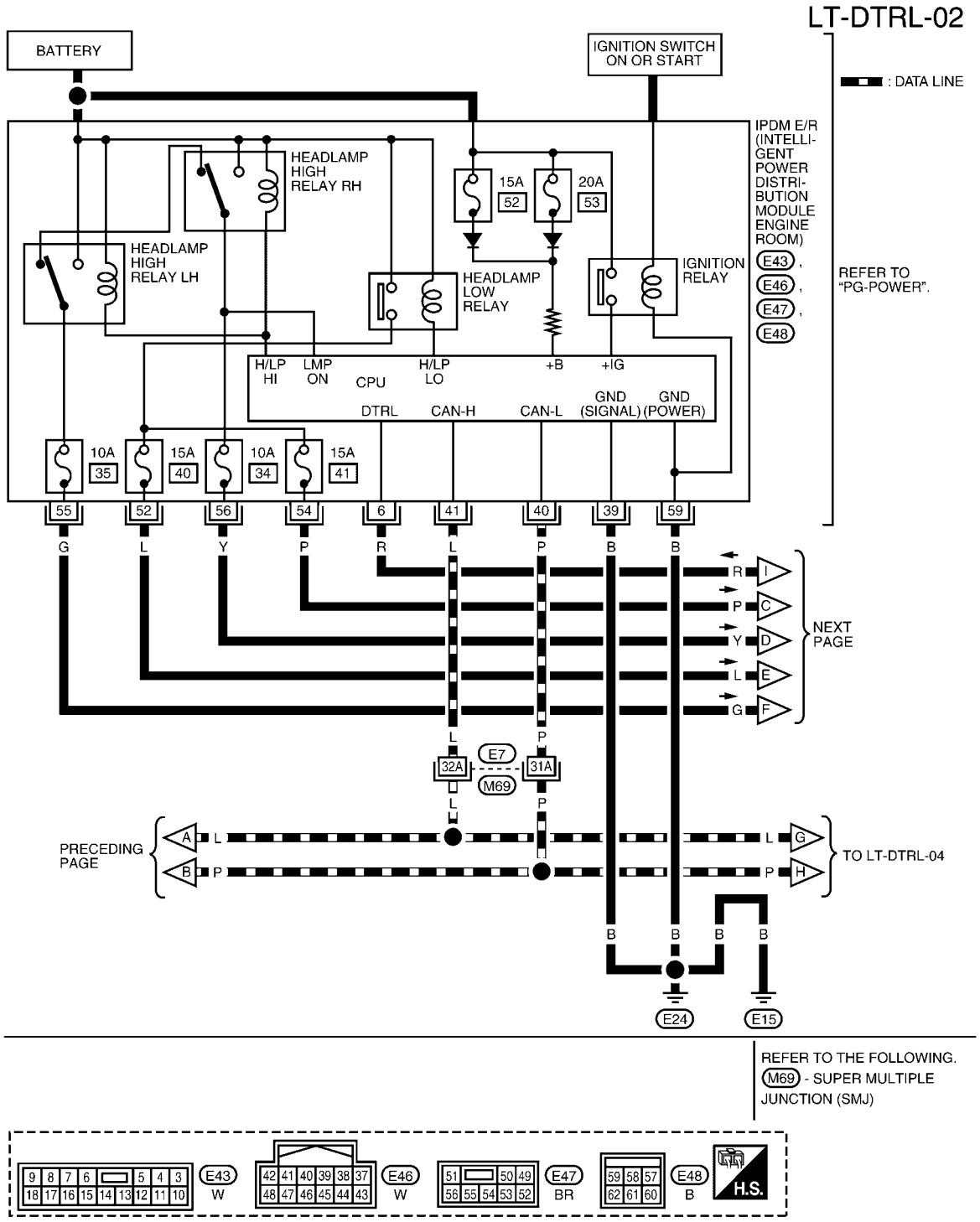
LT-DTRL-02
BATTERY
IGNITION SWITCH ON OR START
: DATA LINE
IPDM E/R (INTELLIGENT POWER DISTRIBUTION MODULE ENGINE ROOM)
E43, E46, E47, E48
REFER TO "PG-POWER".
HEADLAMP HIGH RELAY RH
HEADLAMP HIGH RELAY LH
HEADLAMP LOW RELAY
IGNITION RELAY
15A 52
20A 53
H/LP HI
LMP ON
CPU
H/LP LO
+B
+IG
DTRL
CAN-H
CAN-L
GND (SIGNAL)
GND (POWER)
10A 35
15A 40
10A 34
15A 41
55 52 56 54 6 41 40 39 59
G L Y P R L P B B
NEXT PAGE
32A E7 M69 31A
PRECEDING PAGE
TO LT-DTRL-04
E24 E15
REFER TO THE FOLLOWING.
M69 - SUPER MULTIPLE JUNCTION (SMJ)
E43 W
E46 W
E47 BR
E48 B
H.S.
LKWA0323E

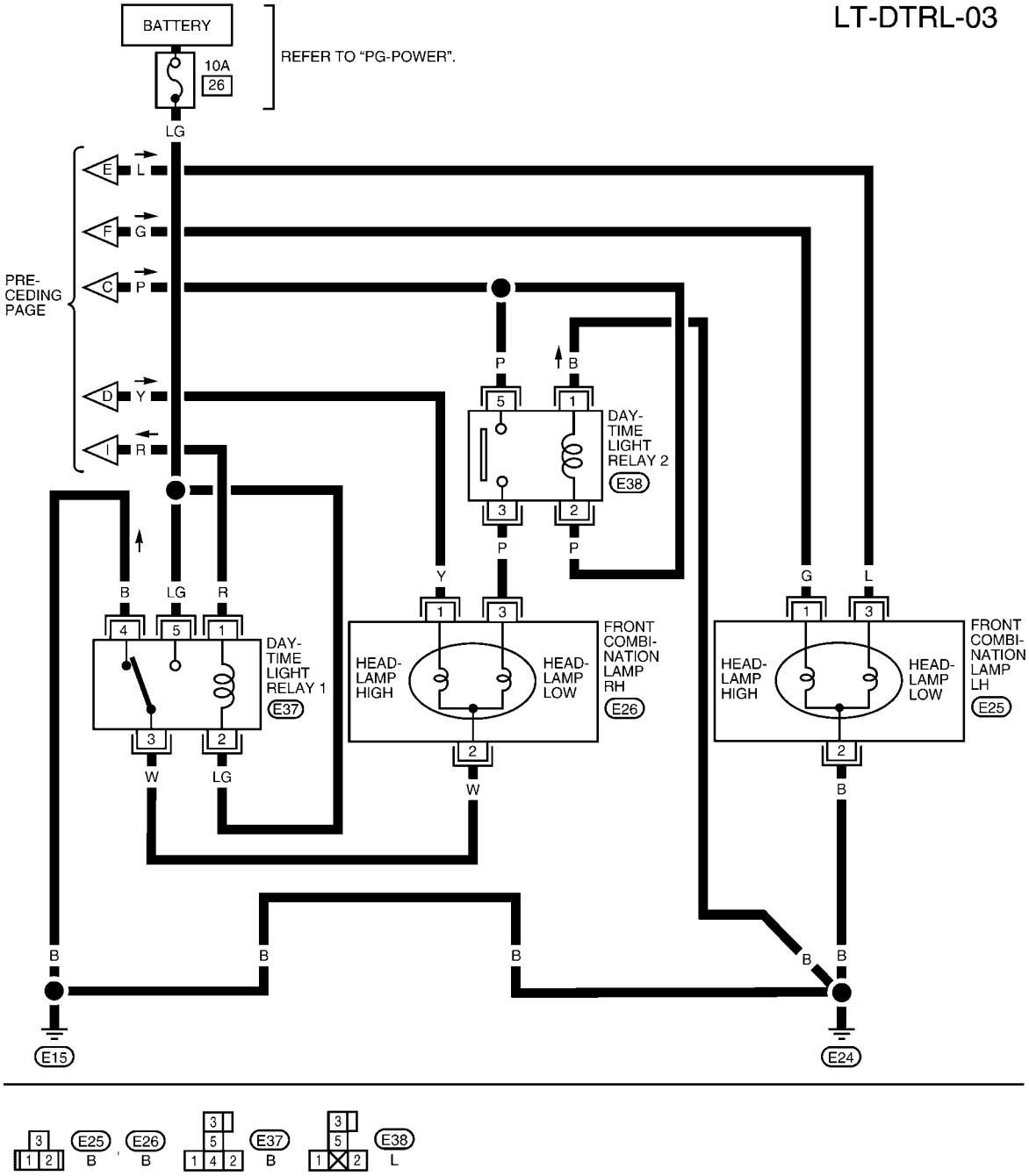
LT-DTRL-03
BATTERY
10A
26
REFER TO "PG-POWER".
LG
PRE-
CEDING
PAGE
E
L
F
G
C
P
D
Y
I
R
P
B
5
1
DAY-
TIME
LIGHT
RELAY 2
E38
3
2
P
P
B
LG
R
4
5
1
DAY-
TIME
LIGHT
RELAY 1
E37
3
2
W
LG
Y
1
3
HEAD-
LAMP
HIGH
HEAD-
LAMP
LOW
FRONT
COMBI-
NATION
LAMP
RH
E26
2
W
G
L
1
3
HEAD-
LAMP
HIGH
HEAD-
LAMP
LOW
FRONT
COMBI-
NATION
LAMP
LH
E25
2
B
B
B
B
B
B
E15
E24
E25
B
E26
B
E37
B
E38
L
LKWA0324E

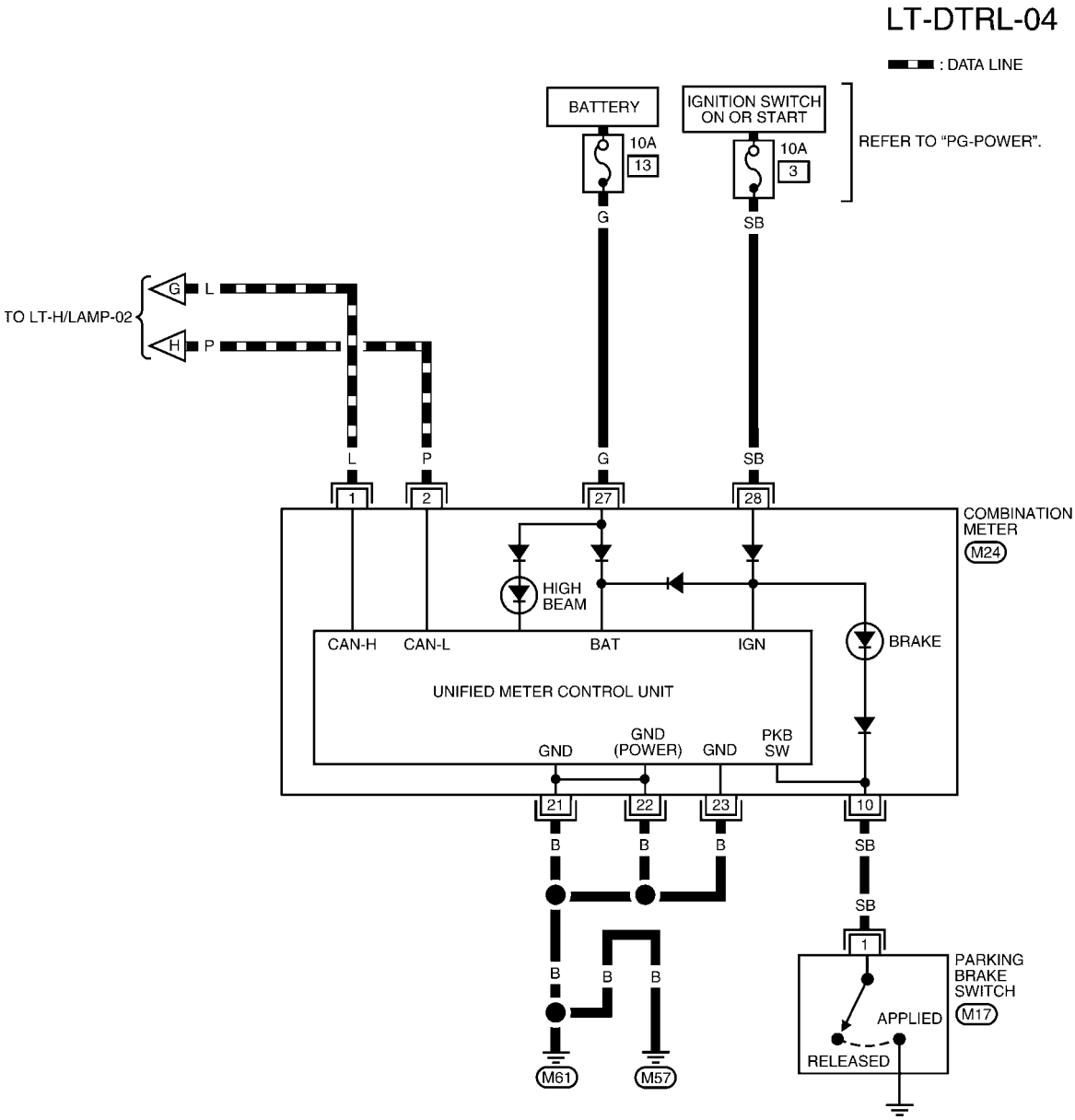

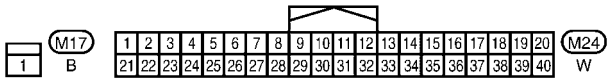

LKWA0325E

Terminal and Reference Value for BCM

INFOID:0000000001704386

Refer to BCS-11, "Terminal and Reference Value for BCM"

Terminal and Reference Value for IPDM E/R

INFOID:0000000001704387

Refer to PG-23, "Terminal and Reference Value for IPDM E/R" .

How to Perform Trouble Diagnosis

INFOID:0000000001704388

1. Confirm the symptom or customer complaint.
2. Understand operation, description and function description. Refer to LT-25, "System Description" .
3. Perform the Preliminary Check. Refer to LT-33, "Preliminary Check" .
4. Check symptom and repair or replace the cause of the malfunction.
5. Does the daytime light system operate normally? If YES, GO TO 6. If NO, GO TO 4.
6. INSPECTION END

Preliminary Check

INFOID:0000000001704389

CHECK BCM CONFIGURATION

1.CHECK BCM CONFIGURATION

Confirm BCM configuration for "DTRL" is set to "WITH". Refer to BCS-17, "Configuration" .

OK or NG

OK >> Continue preliminary check. Refer to BCS-15, "BCM Power Supply and Ground Circuit Inspection" .

NG >> Change BCM configuration for "DTRL" to "WITH". Refer to BCS-17, "Configuration" .

CHECK POWER SUPPLY AND GROUND CIRCUIT FOR BCM

Refer to BCS-15, "BCM Power Supply and Ground Circuit Inspection" .

CHECK POWER SUPPLY AND GROUND CIRCUIT FOR IPDM E/R

Refer to PG-25, "IPDM E/R Power/Ground Circuit Inspection" .

CONSULT-III Function (BCM)

INFOID:0000000001704390

Refer to LT-11, "CONSULT-III Function (BCM)" .

CONSULT-III Function (IPDM E/R)

INFOID:0000000001704391

Refer to LT-12, "CONSULT-III Function (IPDM E/R)" .

Daytime Light Control Does Not Operate Properly (High Beam Headlamps Operate Properly)

INFOID:0000000001704392

1.CHECK DAYTIME LIGHT RELAY 1 FUSE

Inspect daytime light relay fuse 10A fuse (No. 26, located in the fuse and fusible link box).

OK or NG

OK >> GO TO 2.

NG >> Repair harness.

2.CHECK DAYTIME LIGHT RELAY 1 POWER SUPPLY CIRCUIT

1. Turn ignition switch OFF.
2. Remove daytime light relay 1.
3. Check voltage between daytime light relay 1 harness connector E37 terminals 2, 5 and ground.

2, 5 - Ground : Battery voltage should exist.

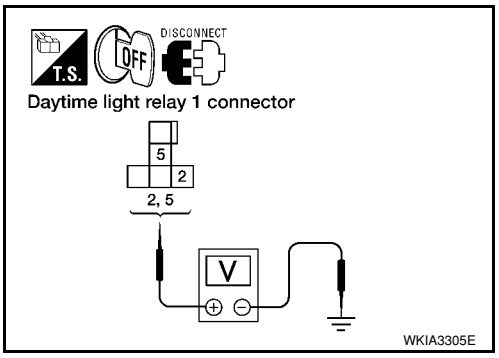

OK or NG

OK >> GO TO 3.

NG >> Repair harness or connector.

3.CHECK DAYTIME LIGHT RELAY 1

1. Apply battery voltage to daytime light relay 1 terminal 2 and supply ground to terminal 1.

2. Check continuity between terminals 3 and 5.

3 - 5 : Continuity should exist.

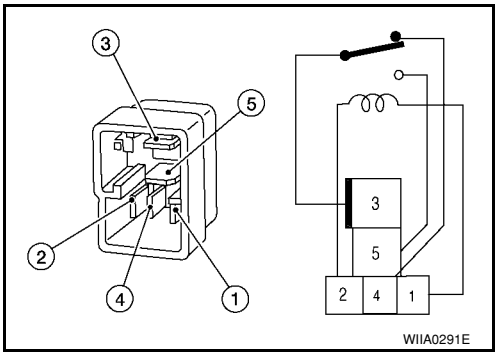

OK or NG

OK >> GO TO 4.
NG >> Replace daytime light relay 1.

4. CHECK INPUT SIGNAL

1. Connect daytime light relay 1.
2. Apply parking brake and start engine. Headlamp switch OFF.
3. Select "IPDM E/R" on CONSULT-III. With DATA MONITOR, make sure "DTRL REQ" turns OFF-ON linked with operation of parking brake switch.

Parking brake ON : DTRL REQ OFF
Parking brake OFF : DTRL REQ ON

OK or NG

OK >> GO TO 6.
NG >> GO TO 5.

5. CHECKING CAN COMMUNICATIONS

Select "BCM" on CONSULT-III and perform self-diagnosis for BCM.

Displayed self-diagnosis results

NO DTC>>Replace BCM. Refer to BCS-18, "Removal and Installation of BCM" .
CAN COMM CIRCUIT>> Check BCM CAN communication system. Refer to LAN-15, "Trouble Diagnosis Flow Chart" .

6. CHECK DAYTIME LIGHT RELAY 1 CONTROL CIRCUIT

1. Turn ignition switch OFF.
2. Disconnect daytime light relay 1 connector E37.
3. Disconnect IPDM E/R connector E43.
4. Check continuity between IPDM E/R connector E43 (A) terminal 6 and daytime light relay 1 connector E37 (B) terminal 1.

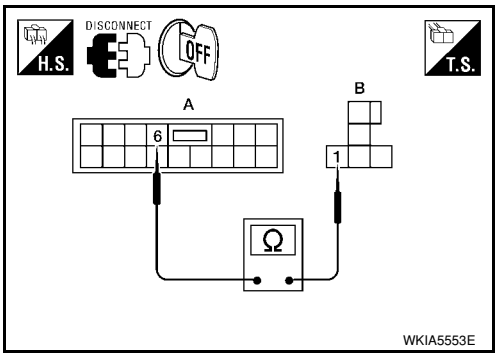

A		B		Continuity
Connector	Terminal	Connector	Terminal	Yes
E43	6	E37	1	

OK or NG

OK >> Replace the IPDM E/R. Refer to PG-26, "Removal and Installation of IPDM E/R" .
NG >> Repair harness or connector.

Aiming Adjustment

INFOID:0000000001704393

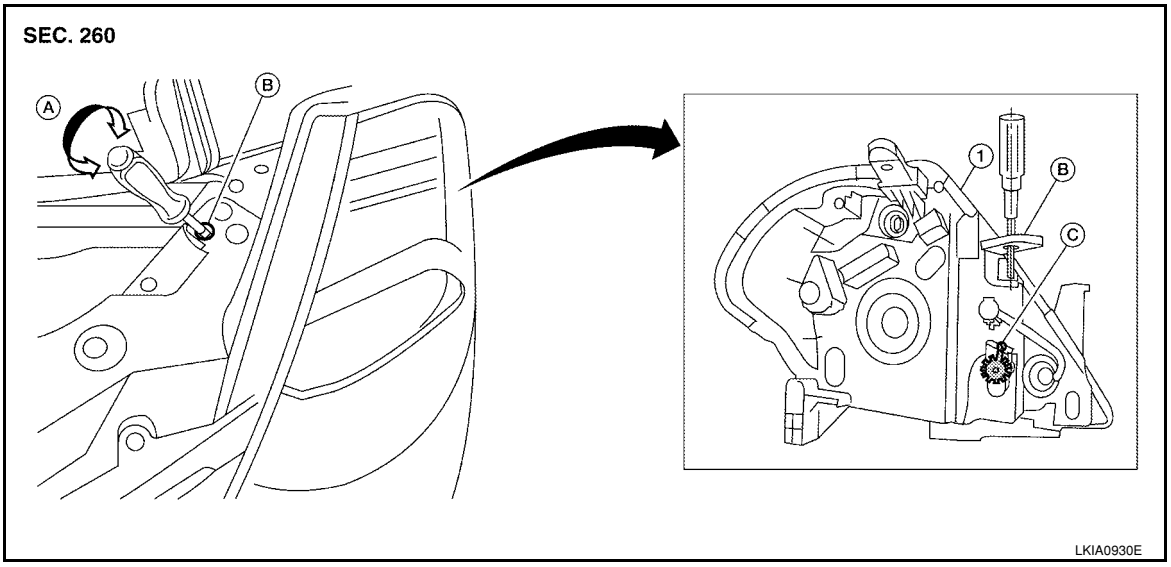

1. Headlamp
A. Inner and outer adjustment
B. Adjusting screw access hole
C. Adjusting screw

PREPARATION BEFORE ADJUSTING

Before performing aiming adjustment, check the following.

1. Keep all tires inflated to correct pressures.
2. Place vehicle on level surface.
3. Set that there is no-load in vehicle other than the driver (or equivalent weight placed in driver's position). Coolant, engine oil filled up to correct level and full fuel tank, spare tire, jack and tools are properly stowed.

LOW BEAM AND HIGH BEAM

1. Turn headlamp low beam ON.
2. Use adjusting screw to perform aiming adjustment.
3. Insert the tool through the adjusting screw access hole to avoid damage to the adjusting screw.

ADJUSTMENT USING AN ADJUSTMENT SCREEN (LIGHT/DARK BORDERLINE)

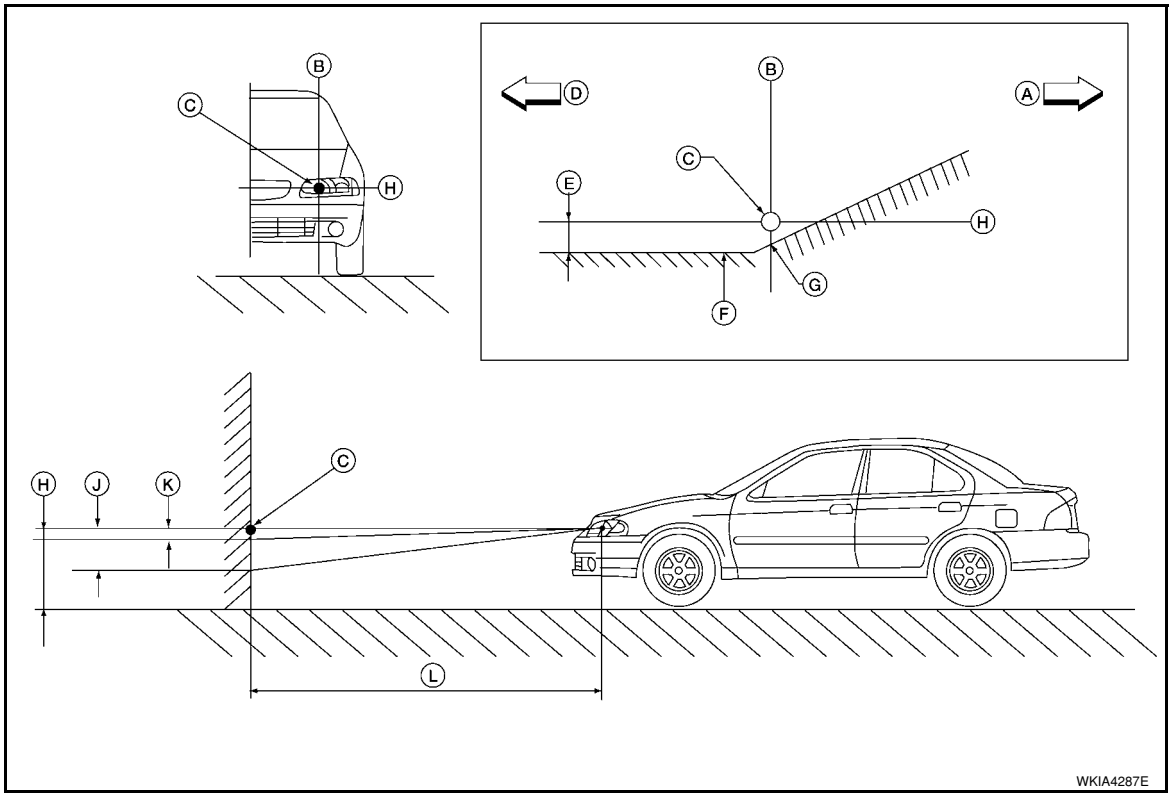

A.	Right	B.	Vertical center line of headlamp	C.	Horizontal aiming center line of headlamp
D.	Left	E.	Vertical aiming cutoff point	F.	Cutoff line for vertical aiming evaluation
G.	Acceptable vertical cutoff setting at horizontal aiming point	H.	Horizontal center line of headlamp	J.	Maximum acceptable vertical aiming point
K.	Minimum acceptable vertical aiming point	L.	Aiming distance from center of headlamp to aiming screen		

- Aim each headlamp individually and ensure other headlamp beam pattern is blocked from screen.
- For vertical headlamp aiming, adjust headlamp until beam pattern is positioned per specified dimensions.

Description	Halogen Headlamp
Vertical aiming cutoff point (E)	53.2 mm (2.094 in)
Minimum acceptable vertical aiming point (K)	13.3 mm (0.52 in)
Maximum acceptable vertical aiming point (J)	93.1 mm (3.67 in)
Aiming distance from center of headlamp to aiming screen (L)	7.62 m (25 ft)

Bulb Replacement

INFOID:0000000001704394

CAUTION:
After installing bulb, be sure to install plastic cap and bulb socket securely to ensure watertightness.

HEADLAMP (HIGH/LOW)

1. Turn lighting switch OFF.
2. Remove the headlamp. Refer to LT-23, "Removal and Installation".
3. Remove back cover.
4. Unlock retaining spring and remove bulb from headlamp.

PARKING (CLEARANCE) LAMP

1. Turn lighting switch OFF.

2. Remove the headlamp. Refer to LT-23, "Removal and Installation".
3. Turn bulb socket counterclockwise and unlock it.
4. Remove bulb from its socket.

FRONT TURN SIGNAL LAMP

1. Turn lighting switch OFF.
2. Remove the headlamp. Refer to LT-23, "Removal and Installation".
3. Turn bulb socket counterclockwise and unlock it.
4. Remove bulb from its socket.

Removal and Installation

INFOID:0000000001704395

REMOVAL

1. Disconnect the negative battery terminal.
2. Remove front bumper fascia. Refer to EI-14.
3. Remove headlamp bolts (A).
4. Pull headlamp (1) toward the vehicle front, disconnect connector, and remove headlamp.

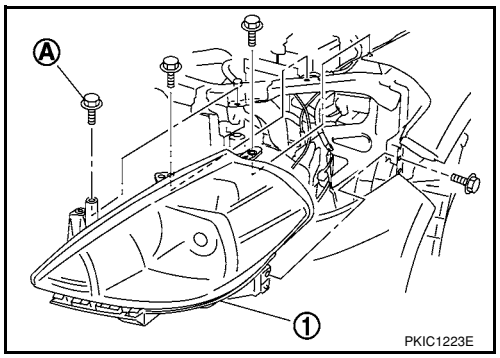

INSTALLATION

Installation is in the reverse order of removal.

- After installation, perform aiming adjustment. Refer to LT-35, "Aiming Adjustment".

Disassembly and Assembly

INFOID:0000000001704396

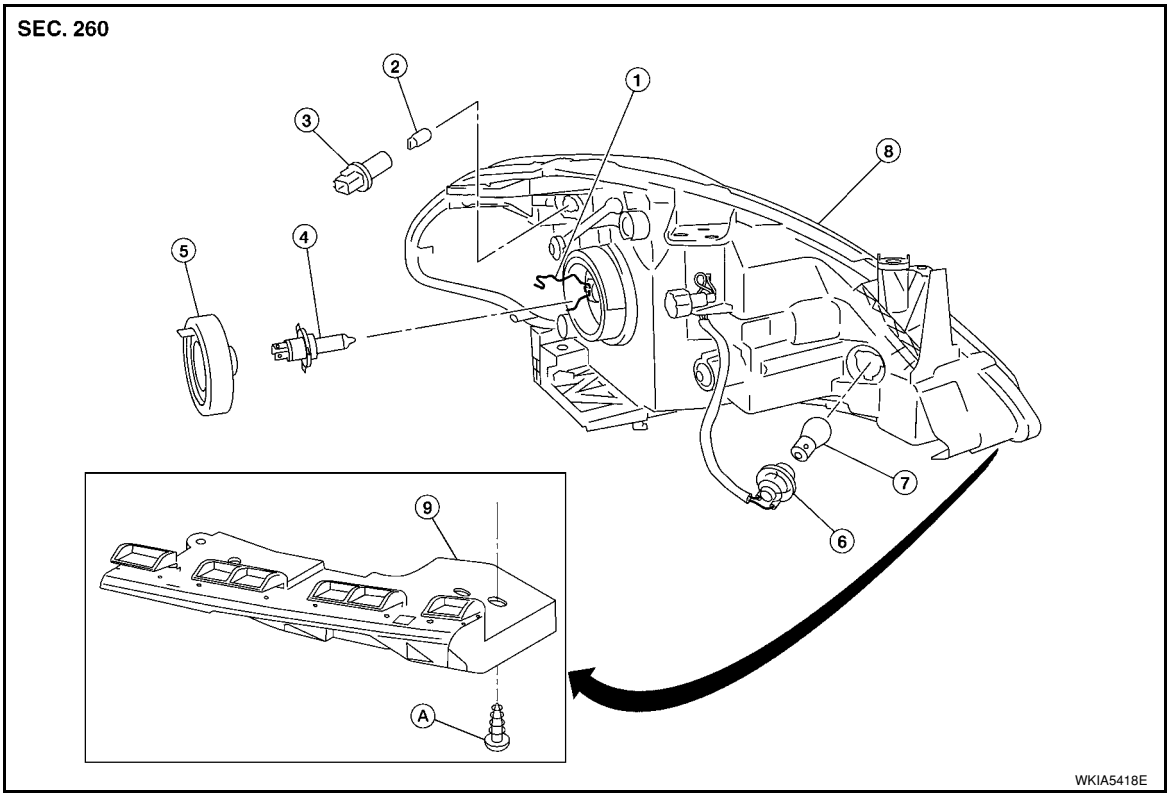

1. Retaining spring
2. Parking (clearance) lamp bulb
3. Parking (clearance) lamp bulb socket
4. Halogen bulb (High/Low)
5. Back cover
6. Front turn signal lamp bulb socket
7. Front turn signal lamp bulb
8. Headlamp housing assembly
9. Bumper stay

A. Screw

DISASSEMBLY

1. Remove back cover.
2. Unlock retaining spring and remove bulb (High/Low).
3. Turn parking (clearance) lamp bulb socket counterclockwise and unlock it.
4. Remove parking (clearance) lamp bulb from its socket.
5. Turn front turn signal lamp bulb socket counterclockwise and unlock it.
6. Remove front turn signal lamp bulb from its socket.
7. Remove the bumper stay.

ASSEMBLY

Assembly is in the reverse order of disassembly.

CAUTION:

- **After installing bulb, be sure to install plastic cap securely to insure water tight seal.**

FRONT FOG LAMP

Component Parts and Harness Connector Location

INFOID:0000000001704397

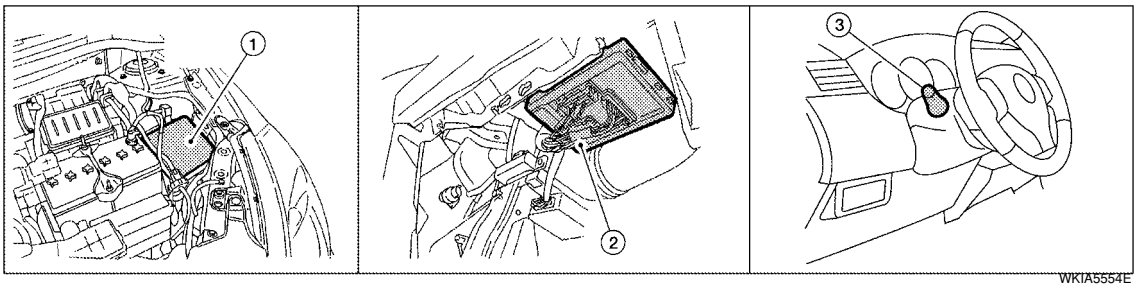

1. IPDM E/R E46, E47 and E48
2. BCM M18 and M20 (viewed with glove box removed)
3. Combination switch (lighting switch) M28

System Description

INFOID:0000000001704398

The front fog lamps are controlled by lighting switch inputs to the BCM (body control module). The lighting switch must be in the 1ST or 2ND position with the high beams OFF before the BCM will request the IPDM E/R (intelligent power distribution module engine room) to turn the front fog lamps on. The BCM requests the front fog lamps over the CAN communication lines to the IPDM E/R. The CPU (central processing unit) of the IPDM E/R controls the front fog lamp relay coil ground. When energized, the relay directs power to the front fog lamps.

OUTLINE

Power is supplied at all times:
- to front fog lamp relay (located in IPDM E/R),
- to ignition relay (located in IPDM E/R),
- through 15A fuse (No. 52, located in IPDM E/R) and
- through 20A fuse (No. 53, located in IPDM E/R)
- to CPU located in IPDM E/R,
- through 40A fusible link (letter **g** , located in the fuse and fusible link box)
- to BCM terminal 70,
- through 10A fuse [No. 8, located in fuse block (J/B)]
- to BCM terminal 57,
- through 10A fuse [No. 13, located in fuse block (J/B)]
- to combination meter terminal 27.

With the ignition switch in the ON or START position, power is supplied:
- to ignition relay (located in IPDM E/R),
- through 10A fuse [No. 6, located in fuse block (J/B)]
- to BCM terminal 38.

With the ignition switch in the ACC or ON position, power is supplied
- through 10A fuse [No. 20, located in fuse block (J/B)]
- to BCM terminal 11.

Ground is supplied
- to BCM terminal 67
- through grounds M57 and M61,
- to IPDM E/R terminals 39 and 59
- through grounds E15 and E24.

FOG LAMP OPERATION

The front fog lamp switch is built into the lighting switch. The lighting switch must be in 1ST position or 2ND position and front fog lamp switch must be ON position for front fog lamp operation. The fog lamp will not operate with the high beam headlamps ON.

When the front fog lamp switch is in the ON position, the BCM sends a request, via the CAN communication lines, to the CPU of the IPDM E/R to ground the coil side of the front fog lamp relay. The front fog lamp relay then directs power
- through 15A fuse (No. 56, located in IPDM E/R)

- through IPDM E/R terminal 50
- to front fog lamp LH terminal 1, and
- through IPDM E/R terminal 51
- to front fog lamp RH terminal 1.

Ground is supplied

- to front fog lamp terminal 2,
- through grounds E15 and E24.

With power and grounds supplied, front fog lamps illuminate.

COMBINATION SWITCH READING FUNCTION

Refer to BCS-3, "System Description" .

EXTERIOR LAMP BATTERY SAVER CONTROL

Refer to LT-72, "System Description" .

CAN Communication System Description

INFOID:0000000001704399

Refer to LAN-6, "System Description" .

Wiring Diagram - F/FOG -

INFOID:0000000001704400

LT-F/FOG-01

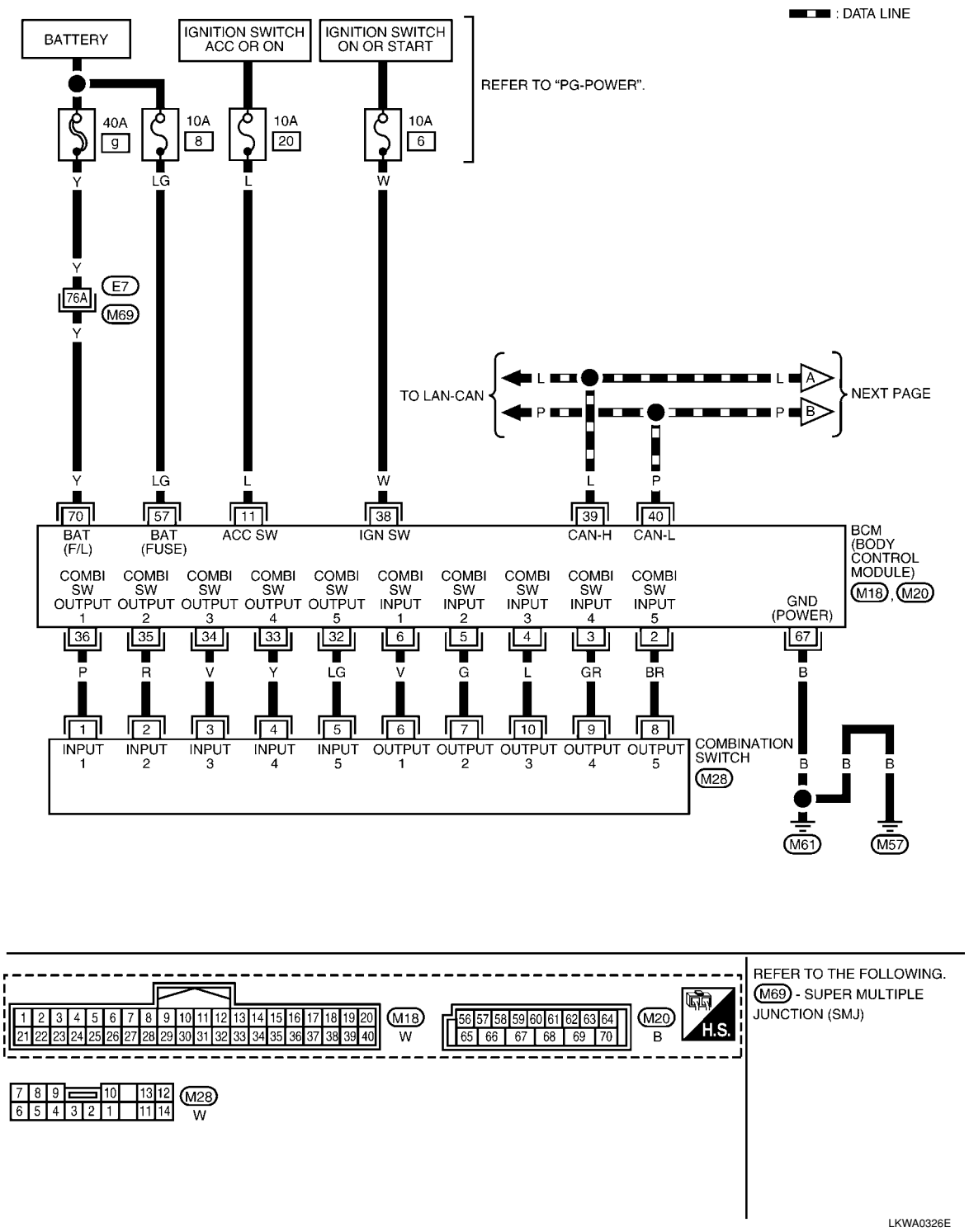

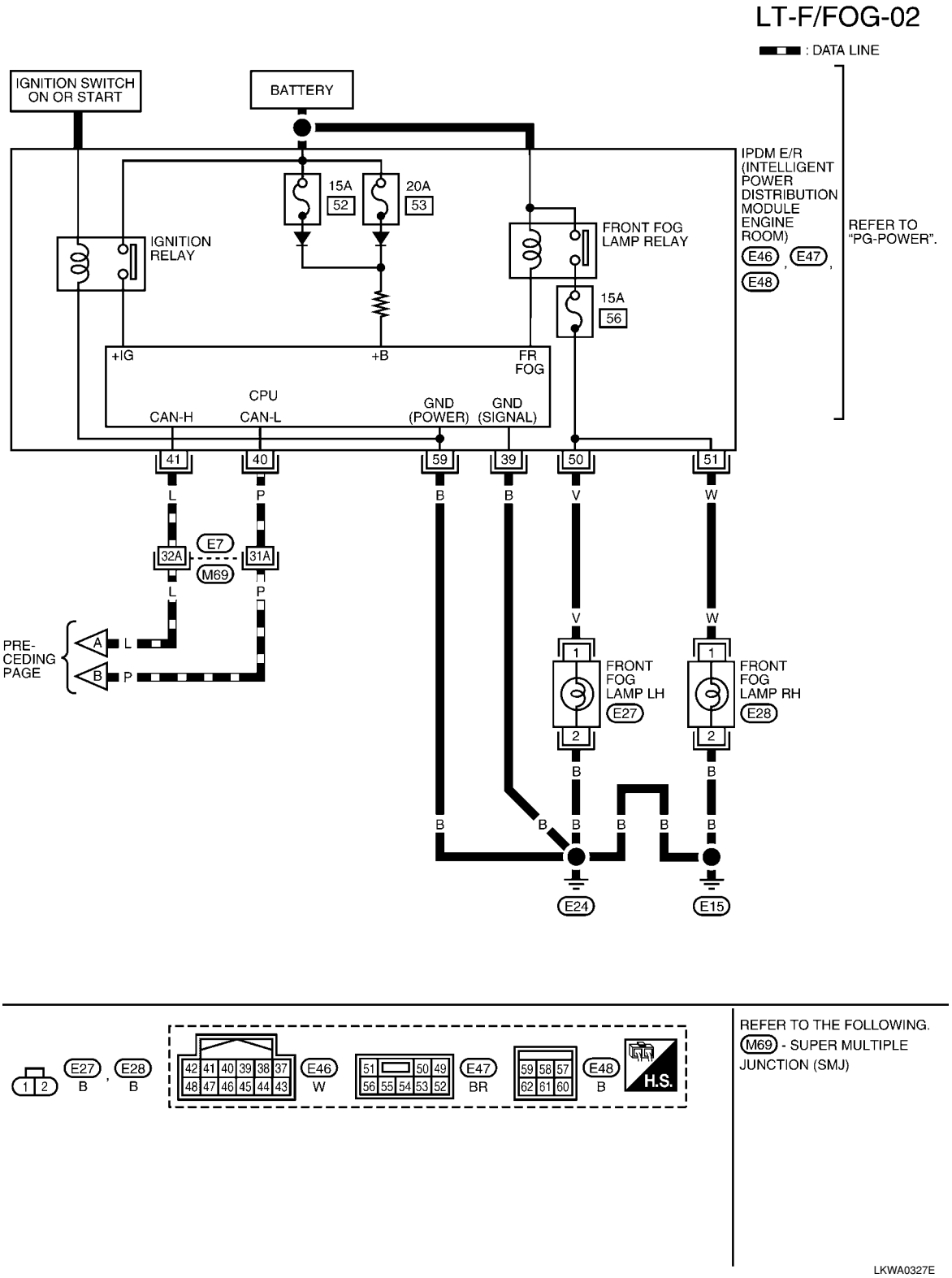

Terminal and Reference Value for BCM

INFOID:0000000001704401

Refer to BCS-11, "Terminal and Reference Value for BCM" .

Terminal and Reference Value for IPDM E/R

INFOID:0000000001704402

Refer to PG-23, "Terminal and Reference Value for IPDM E/R" .

How to Proceed with Trouble Diagnosis

INFOID:0000000001704403

1. Confirm the symptom or customer complaint.
2. Understand operation description and function description. Refer to LT-39, "System Description" .
3. Perform the Preliminary Check. Refer to LT-43, "Preliminary Check" .
4. Check symptom and repair or replace the cause of the malfunction.
5. Do the front fog lamps operate normally? If YES, GO TO 6. If NO, GO TO 4.
6. INSPECTION END.

Preliminary Check

INFOID:0000000001704404

CHECK POWER SUPPLY AND GROUND CIRCUIT FOR BCM
Refer to BCS-15, "BCM Power Supply and Ground Circuit Inspection" .

CHECK POWER SUPPLY AND GROUND CIRCUIT FOR IPDM E/R
Refer to PG-25, "IPDM E/R Power/Ground Circuit Inspection" .

CONSULT-III Function (BCM)

INFOID:0000000001704405

Refer to BCS-16, "CONSULT-III Function (BCM)" .

CONSULT-III Function (IPDM E/R)

INFOID:0000000001704406

Refer to PG-17, "CONSULT-III Function (IPDM E/R)" .

Front Fog lamps Do Not Illuminate (Both Sides)

INFOID:0000000001704407

1. INSPECT FOG LAMP FUSE

Inspect fog lamp 15A fuse No. 56 in IPDM E/R.

OK or NG

OK >> GO TO 2.
NG >> Repair harness.

2. CHECK COMBINATION SWITCH INPUT SIGNAL

1. Select “BCM” on CONSULT-III. Select “HEAD LAMP” on “SELECT TEST ITEM” screen.
2. Select “DATA MONITOR” on “SELECT DIAG MODE” screen. Make sure that “FR FOG SW” turns ON-OFF linked with operation of fog lamp switch.

When fog lamp switch is ON : FR FOG SW ON

With CONSULT-III
Select “BCM” on CONSULT-III. With “HEAD LAMP” data monitor, make sure “FR FOG SW” turns ON-OFF linked with operation of front fog lamp switch.

Without CONSULT-III
Refer to LT-63, "Combination Switch Inspection" .

OK or NG

OK >> GO TO 3.
NG >> Check combination switch (lighting switch). Refer to LT-63, "Combination Switch Inspection" .

3. FOG LAMP ACTIVE TEST

With CONSULT-III
1. Select “IPDM E/R” on CONSULT-III. Select “ACTIVE TEST” on “SELECT DIAG MODE” screen.
2. Select “EXTERNAL LAMPS” on “SELECT TEST ITEM” screen.
3. Touch “FOG” screen.
4. Make sure front fog lamp operates.

Front fog lamp should operate.

Without CONSULT-III

1. Start auto active test. Refer to PG-19, "Auto Active Test" .
2. Make sure front fog lamp operates.

Front fog lamp should operate.

OK or NG

OK >> GO TO 4.
NG >> GO TO 5.

4. CHECK IPDM E/R

1. Select “IPDM E/R” on CONSULT-III. Select “DATA MONITOR” on “SELECT DIAG MODE” screen.
2. Make sure “FR FOG REQ” turns ON when front fog lamp switch is in ON position.

When front fog lamp switch is ON position : FR FOG REQ ON

OK or NG

OK >> Replace IPDM E/R. Refer to PG-26, "Removal and Installation of IPDM E/R" .
NG >> Replace BCM. Refer toBCS-18, "Removal and Installation of BCM" .

5. CHECK FOG LAMP INPUT SIGNAL

With CONSULT-III

1. Turn ignition switch OFF.
2. Disconnect front fog lamp connector.
3. Select “IPDM E/R” on CONSULT-III, and select “ACTIVE TEST” on “SELECT DIAG MODE” screen.
4. Select “EXTERNAL LAMPS” on “SELECT TEST ITEM” screen.
5. Touch “FOG” screen.
6. When front fog lamp relay is operating, check voltage between front fog lamp harness connector and ground.

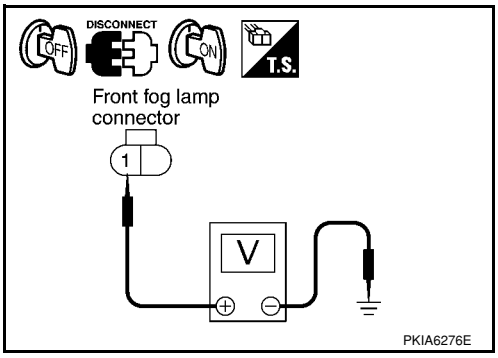

(+)		(–)	Voltage
Front fog lamp connector	Terminal		
RH	E28	1	Ground	Battery voltage
LH	E27			

Without CONSULT-III

1. Turn ignition switch OFF.
2. Disconnect front fog lamp connector.
3. Start auto active test. Refer to PG-19, "Auto Active Test" .
4. When front fog lamp relay is operating, check voltage between front fog lamp harness connector and ground.

(+)		(–)	Voltage
Front fog lamp connector	Terminal		
RH	E28	1	Ground	Battery voltage
LH	E27		

OK or NG

OK >> GO TO 7.
NG >> GO TO 6.

6. CHECK FOG LAMP CIRCUIT

1. Turn ignition switch OFF.
2. Disconnect IPDM E/R connector.

3. Check continuity between IPDM E/R harness connector (A) and front fog lamp harness connector (B).

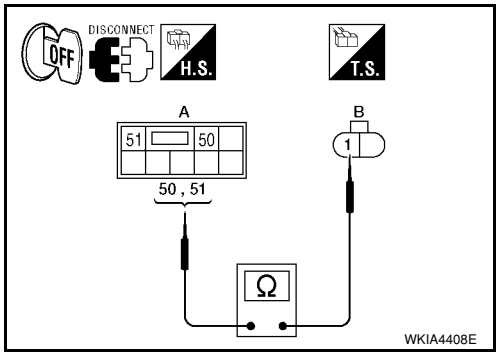

Circuit	A		B		Continuity
	Connector	Terminal	Connector	Terminal	
RH	E47	51	E28	1	Yes
LH		50	E27		

OK or NG

OK >> Replace IPDM E/R. Refer to PG-26, "Removal and Installation of IPDM E/R" .

NG >> Repair harness or connector.

7. CHECK FOG LAMP GROUND

1. Check continuity between front fog lamp harness connector and ground.

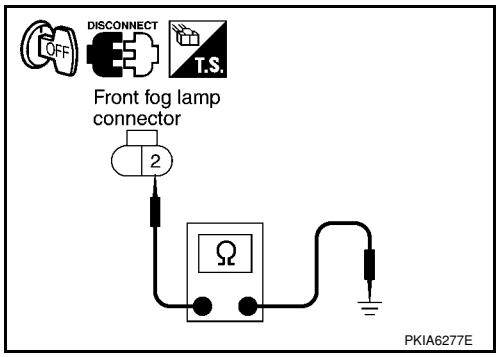

Front fog lamp connector		Terminal	Ground	Continuity
RH	E28	2		Yes
LH	E27			

OK or NG

OK >> Check front fog lamp bulbs.

NG >> Repair harness or connector.

Front Fog Lamp Does Not Illuminate (One Side)

INFOID:0000000001704408

1. CHECK BULB

Check bulb of lamp which does not illuminate.

OK or NG

OK >> GO TO 2.

NG >> Replace front fog lamp bulb.

2. CHECK FOG LAMP CIRCUIT

1. Turn ignition switch OFF.
2. Disconnect IPDM E/R connector and front fog lamp connector.
3. Check continuity between IPDM E/R harness connector (A) and front fog lamp harness connector (B).

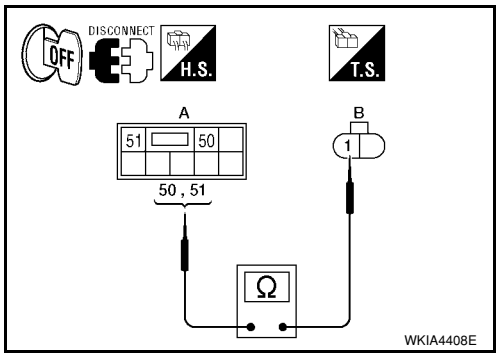

Circuit	A		B		Continuity
	Connector	Terminal	Connector	Terminal	
RH	E47	51	E28	1	Yes
LH		50	E27		

OK or NG

OK >> GO TO 3.

NG >> Repair harness or connector.

3. CHECK FOG LAMP GROUND

1. Check continuity between front fog lamp harness connector and ground.

Front fog lamp connector		Terminal		Continuity
RH	E28	2	Ground	Yes
LH	E27			

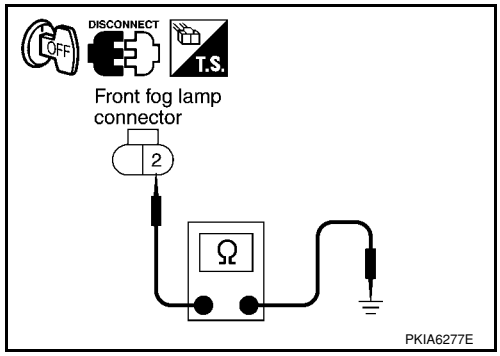

OK or NG

OK >> Replace IPDM E/R. Refer to PG-26, "Removal and Installation of IPDM E/R" .

NG >> Repair harness or connector.

Aiming Adjustment

INFOID:0000000001704409

The front fog lamp is a semi-sealed beam type which uses a replaceable halogen bulb. Before performing aiming adjustment, make sure of the following.

- Keep all tires inflated to correct pressure.
- Place vehicle on level surface.
- Set that there is no-load in vehicle other than the driver (or equivalent weight placed in driver's position). Coolant, engine oil filled up to correct level and full fuel tank, spare tire, jack and tools are properly stowed.

Adjust aiming in the vertical direction by turning the adjusting screw (A).

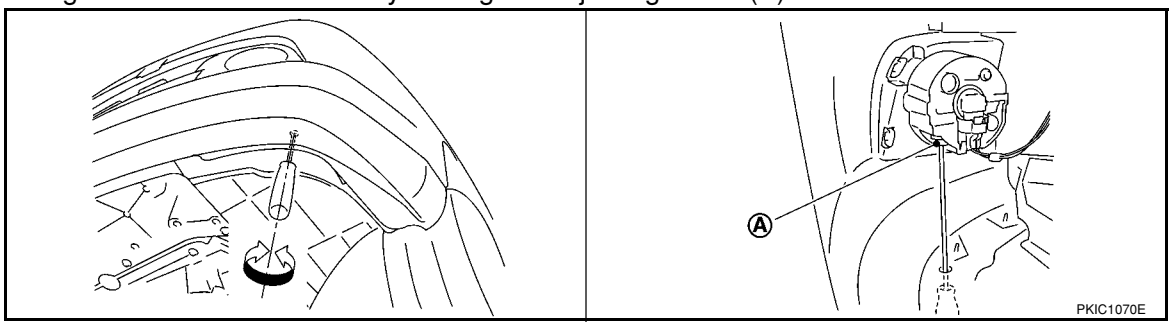

1. Set the distance (C) between the screen and the center of front fog lamp lens (E) as shown.
2. Turn front fog lamps (1) to ON.
3. Adjust front fog lamps using adjusting screw so that the top edge of the high intensity zone (A) is as shown.

Aiming distance from center of fog lamp to screen (C)	25,000 mm (984.3 in)
Foglamp beam width (D)	870 mm (34.3 in)
Horizontal distance from ground to bottom edge of high intensity zone (B)	220 mm (8.7 in)
Horizontal distance from bottom edge to top edge of high intensity zone (A)	21.75 mm (0.9 in)

NOTE:
When performing adjustment, if necessary, cover the headlamps and opposite front fog lamp.

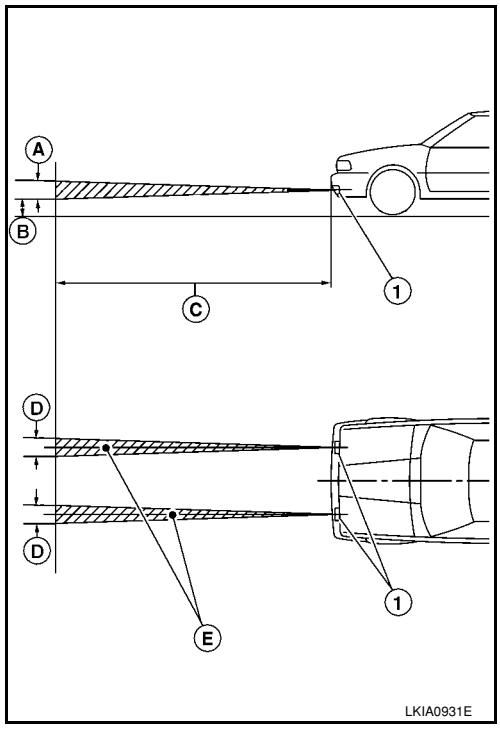

Bulb Replacement

INFOID:0000000001704410

1. Turn lighting switch OFF.
2. Turn off the fender protector (front) to obtain work space between the fender protector and fender.
3. Disconnect front fog lamp connector (1).
4. Turn bulb socket (2) counterclockwise unlock and remove it.
5. Remove bulb from its socket.

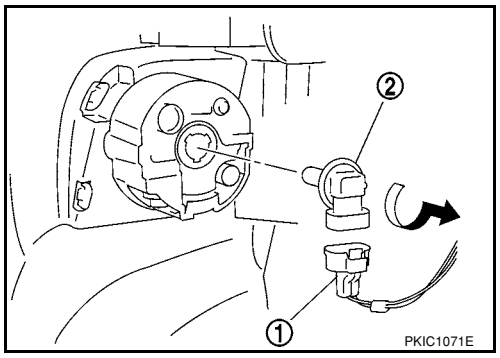

Removal and Installation

INFOID:0000000001704411

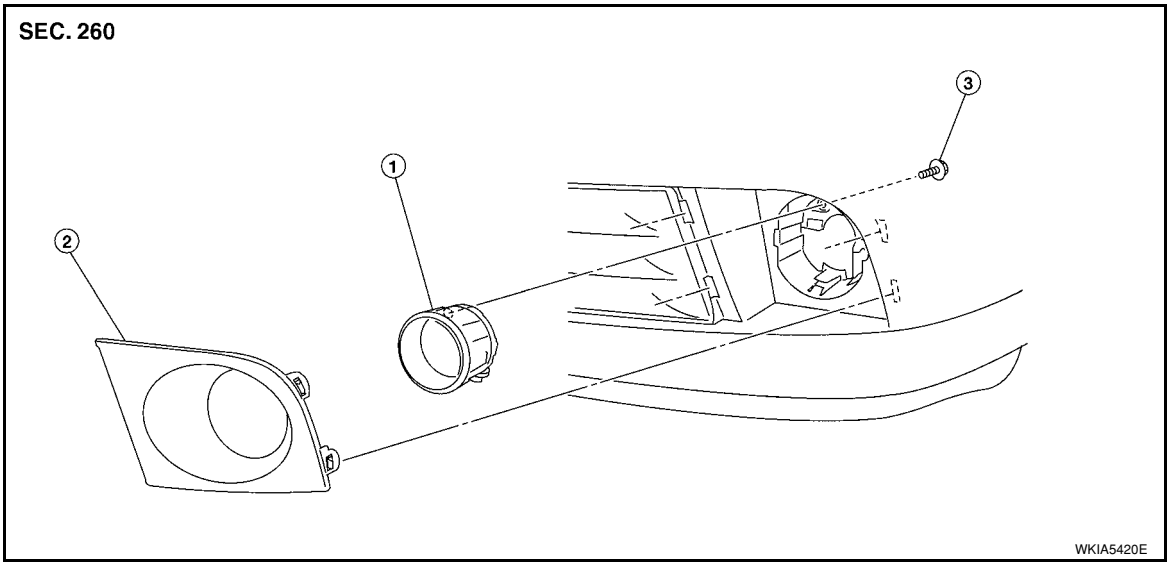

1. Front fog lamp
2. Front bumper finisher
3. Bolt

REMOVAL

1. Turn over the fender protector and undercover to obtain work space between the fender protector and fender.
2. Disconnect front fog lamp connector.
3. Remove pawl, and front bumper finisher from front bumper.
4. Remove bolt and remove front fog lamp from bracket.

INSTALLATION

Installation is in the reverse order of removal.

TURN SIGNAL AND HAZARD WARNING LAMPS

Component Parts and Harness Connector Location

INFOID:0000000001704412

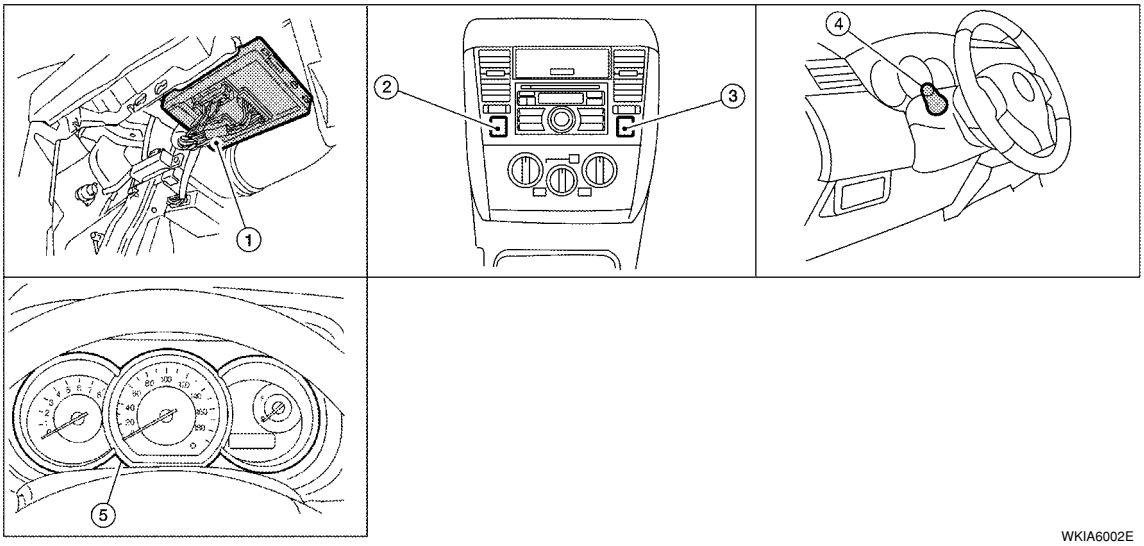

WKIA6002E

1. BCM M18 and M20 (view with glove box removed)
2. Hazard switch M55 (late production)
3. Hazard switch M55 (early production)
4. Combination switch (lighting switch) M28
5. Combination meter M24

System Description

INFOID:0000000001704413

TURN SIGNAL OPERATION

Power is supplied at all times
- through 40A fusible link (letter **g** , located in the fuse and fusible link box)
- to BCM (body control module) terminal 70,
- through 10A fuse [No. 8, located in the fuse block (J/B)]
- to BCM terminal 57,
- through 10A fuse [No. 13, located in the fuse block (J/B)]
- to combination meter terminal 27.

With the ignition switch in the ON or START position, power is supplied
- through 10A fuse [No. 6, located in fuse block (J/B)]
- to BCM terminal 38,
- through 10A fuse [No. 3, located in fuse block (J/B)]
- to combination meter terminal 28.

With the ignition switch in the ACC or ON position, power is supplied
- through 10A fuse [No. 20, located in the fuse block (J/B)]
- to BCM terminal 11.

Ground is supplied
- to BCM terminal 67 and
- to combination meter terminals 21, 22 and 23
- through grounds M57 and M61.

LH Turn Signal Lamp

When the turn signal switch is moved to the left turn position, the BCM receives an input signal requesting left turn signals to flash. The BCM then supplies power
- through BCM terminal 60
- to front combination lamp LH terminal 4 and
- to rear combination lamp LH terminal 6.

Ground is supplied
- to front combination lamp LH terminal 5
- through grounds E15 and E24,

- to rear combination lamp LH terminal 1
- through grounds B7 and B19.

The BCM also sends a request, via the CAN communication lines, to the combination meter to flash the left turn signal indicator. The unified meter control unit in the combination meter supplies ground to the left turn signal indicator lamp and activates the audible turn signal indicator.
With power, ground and input supplied, the BCM controls the flashing of the turn signal lamps.

RH Turn Signal Lamp

When turn signal switch is moved to the right turn position, the BCM receives an input signal requesting right turn signals to flash. The BCM then supplies power
- through BCM terminal 61
- to front combination lamp RH terminal 4 and
- to rear combination lamp RH terminal 6.

Ground is supplied
- to front combination lamp RH terminal 5
- through grounds E15 and E24,
- to rear combination lamp RH terminal 1
- through grounds B117, B132 (all models) and D402 (with hatchback).

The BCM also sends a request, via the CAN communication lines, to the combination meter to flash the right turn signal indicator. The unified meter control unit in the combination meter supplies ground to the right turn signal indicator lamp and activates the audible turn signal indicator.
With power, ground and input supplied, the BCM controls the flashing of the turn signal lamps.

HAZARD LAMP OPERATION

Power is supplied at all times
- through 40A fusible link (letter **g** , located in fuse, fusible link and relay box)
- to BCM terminal 70,
- through 10A fuse [No. 8, located in fuse block (J/B)]
- to BCM terminal 57,
- through 10A fuse [No. 13, located in fuse block (J/B)]
- to combination meter terminal 27.

Ground is supplied
- to hazard switch terminal 1,
- to BCM terminal 67, and
- to combination meter terminals 21, 22 and 23
- through grounds M57 and M61.

When hazard switch is depressed, ground is supplied
- through hazard switch terminal 2
- to BCM terminal 29.

BCM then supplies power
- to front combination lamp LH terminal 4 and
- to rear combination lamp LH terminal 6
- through BCM terminal 60,
- to front combination lamp RH terminal 4 and
- to rear combination lamp RH terminal 6
- through BCM terminal 61.

Ground is supplied
- to front combination lamp LH and RH terminal 5
- through grounds E15 and E24,
- to rear combination lamp LH terminal 1
- through grounds B7 and B19,
- to rear combination lamp RH terminal 1
- through grounds B117, B132 and D402 (hatchback).

The BCM also supplies input to combination meter across the CAN communication lines. This input is processed by unified meter control unit in combination meter, which in turn supplies ground to the left and right turn signal indicator lamps.
With power and input supplied, BCM controls flashing of hazard warning lamps.

REMOTE KEYLESS ENTRY SYSTEM OPERATION

Power is supplied at all times
- through 40A fusible link (letter **g** , located in fuse, fusible link and relay box)
- to BCM terminal 70,

- through 10A fuse [No. 13, located in fuse block (J/B)]
- to combination meter terminal 27.

Ground is supplied

- to BCM terminal 67 and
- to combination meter terminals 21, 22 and 23
- through grounds M57 and M61.

When the remote keyless entry system is triggered by input from the keyfob, the BCM supplies power

- through BCM terminal 60
- to front combination lamp LH terminal 4 and
- to rear combination lamp LH terminal 6,
- through BCM terminal 61
- to front turn signal lamp RH terminal 4 and
- to rear combination lamp RH terminal 6.

Ground is supplied

- to front combination lamp LH and RH terminals 5
- through grounds E15 and E24,
- to rear combination lamp LH terminal 1
- through grounds B7 and B19,
- to rear combination lamp RH terminal 1
- through grounds B117, B132 (all models) and D402 (with hatchback).

The BCM also supplies input to combination meter via the CAN communication lines. This input is processed by the unified meter control unit in combination meter, which in turn supplies ground to the left and right turn signal indicator lamps.

With power and ground supplied, BCM controls flashing of hazard warning lamps when keyfob is used to activate remote keyless entry system.

COMBINATION SWITCH READING FUNCTION

Refer to BCS-3, "System Description" .

CAN Communication System Description

INFOID:0000000001704414

Refer to LAN-6, "System Description" .

Schematic

INFOID:0000000001704415

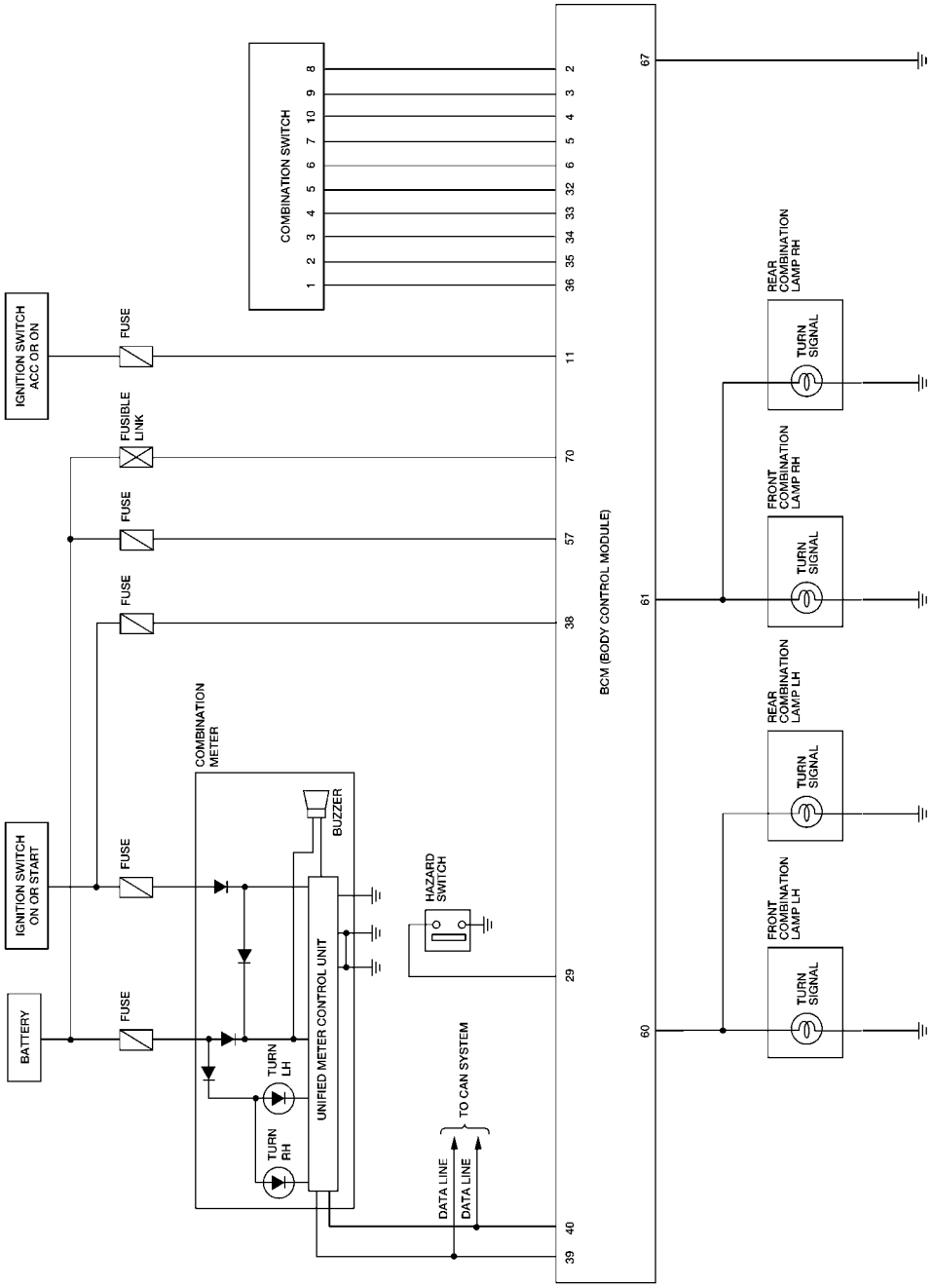

WKWA4974E

Wiring Diagram - TURN -

INFOID:0000000001704416

LT-TURN-01

: DATA LINE

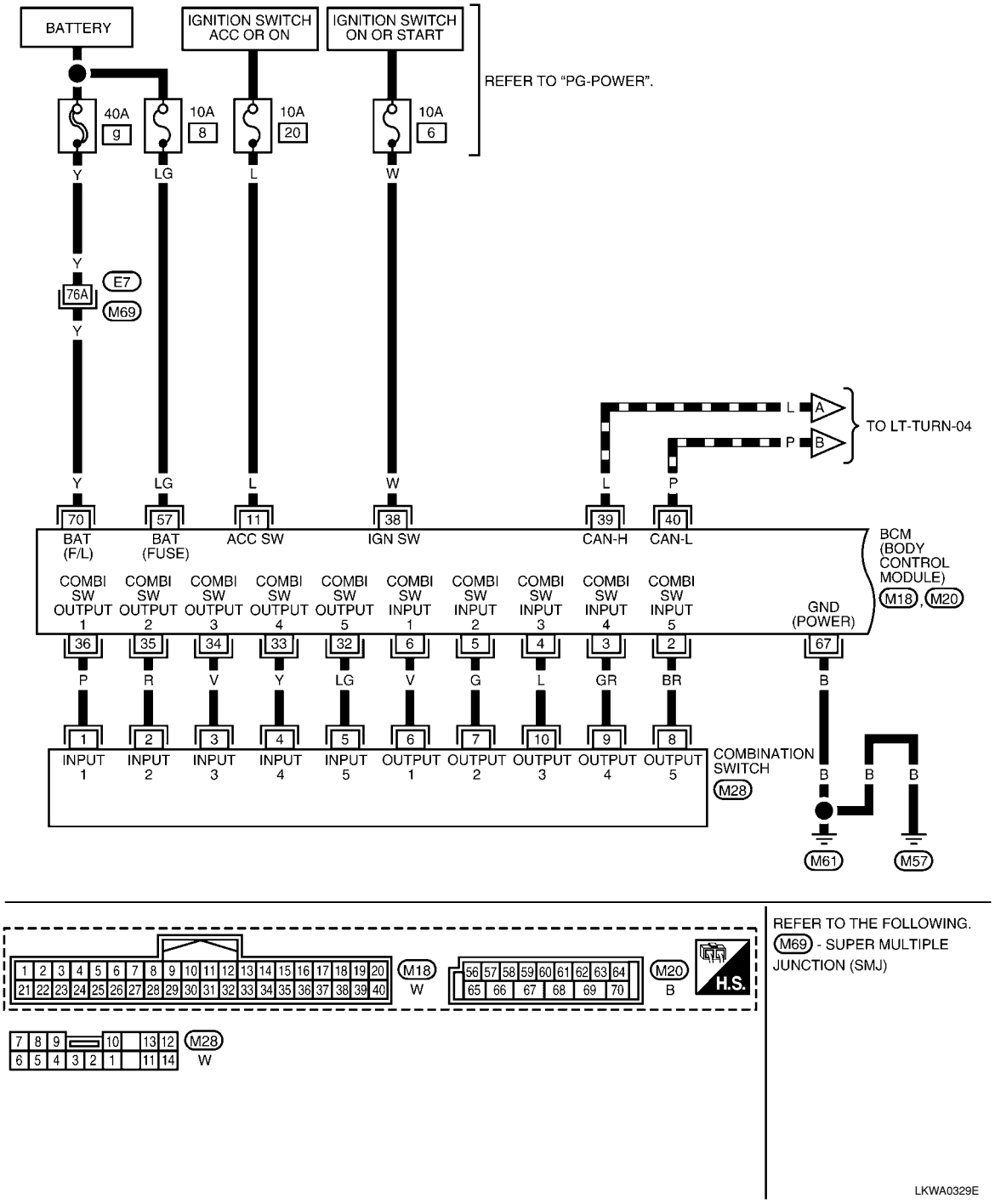

LT-TURN-02

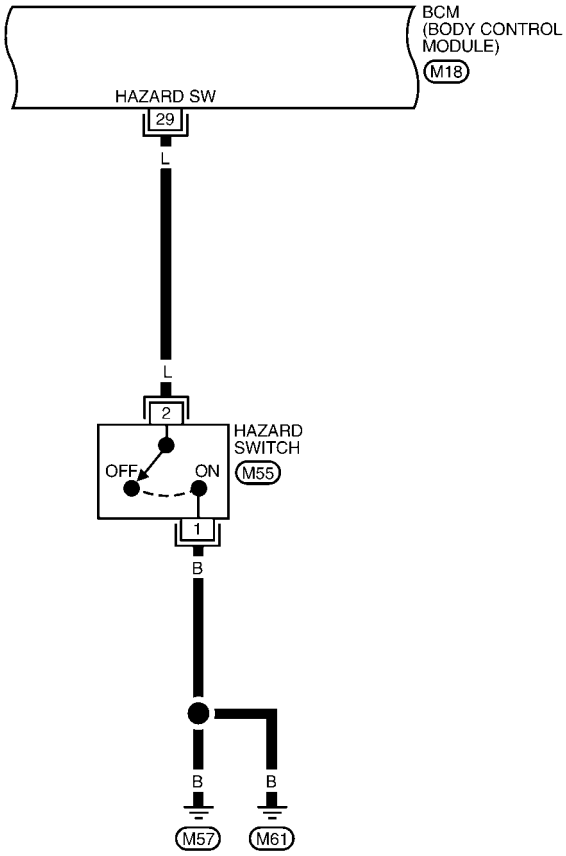

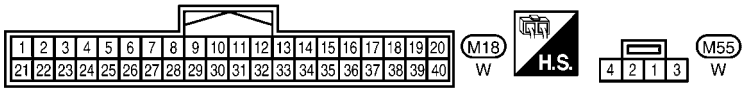

LKWA0330E

LT-TURN-03

HB : WITH HATCHBACK

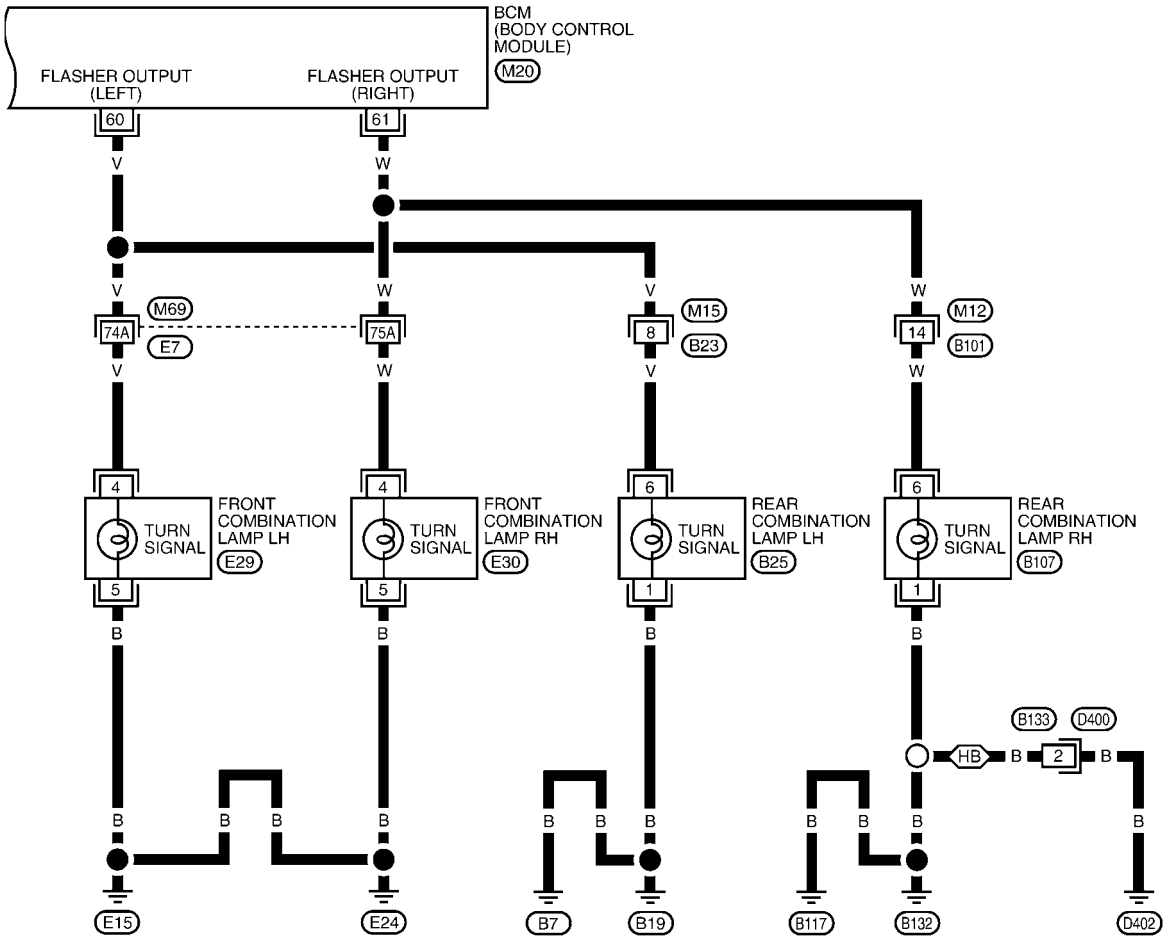

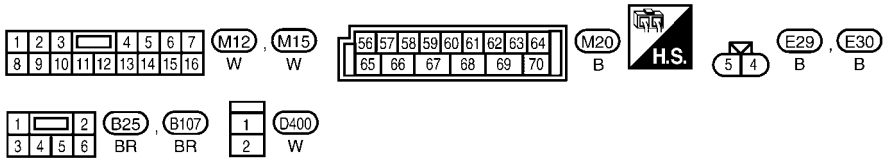

REFER TO THE FOLLOWING.
M69 - SUPER MULTIPLE JUNCTION (SMJ)

WKWA5808E

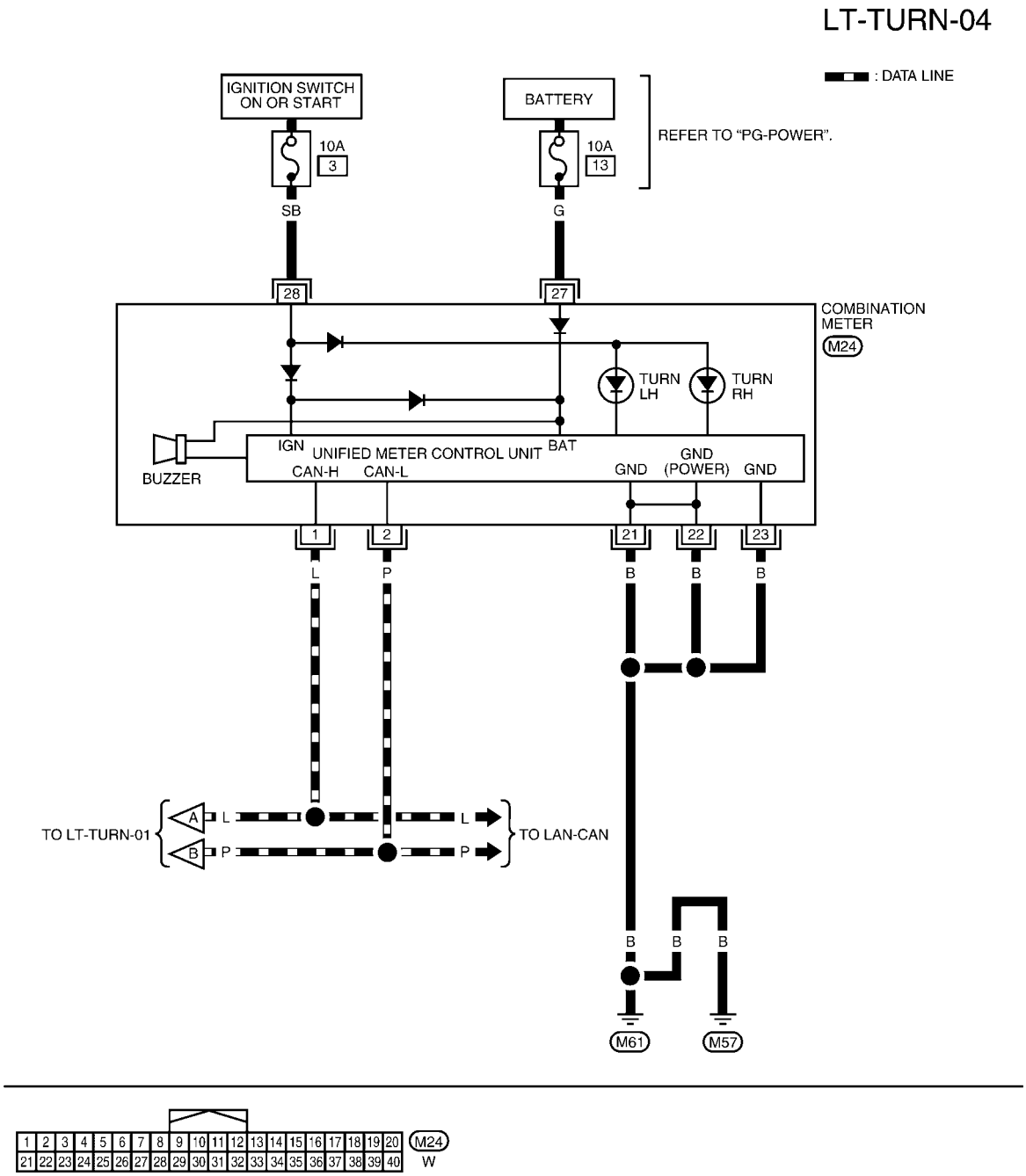

LKWA0332E

Terminal and Reference Value for BCM

INFOID:0000000001704417

Refer to BCS-11, "Terminal and Reference Value for BCM" .

How to Proceed with Trouble Diagnosis

INFOID:0000000001704418

1. Confirm the symptom or customer complaint.
2. Understand operation description and function description. Refer to LT-48, "System Description" .

3. Perform the preliminary check. Refer to LT-56, "Preliminary Check" .
4. Check symptom and repair or replace the cause of the malfunction.
5. Do turn signal and hazard warning lamps operate normally? If YES, GO TO 6. If NO, GO TO 4.
6. INSPECTION END

Preliminary Check

INFOID:0000000001704419

CHECK POWER SUPPLY AND GROUND CIRCUIT FOR BCM

Refer to BCS-15, "BCM Power Supply and Ground Circuit Inspection" .

CONSULT-III Function (BCM)

INFOID:0000000001704420

Refer to LT-11, "CONSULT-III Function (BCM)" .

Turn Signals Do Not Operate

INFOID:0000000001704421

1. CHECK COMBINATION SWITCH INPUT SIGNAL

With CONSULT-III

1. Select “BCM” on CONSULT-III. Select “FLASHER” on “SELECT TEST ITEM” screen.
2. Select “DATA MONITOR” on “SELECT DIAG MODE” screen. Make sure that “TURN SIGNAL R” and “TURN SIGNAL L” turns ON-OFF linked with operation of lighting switch.

When turn signal switch is right position	**: TURN SIGNAL R ON**
When turn signal switch is left position	**: TURN SIGNAL L ON**

Without CONSULT-III

Refer to LT-63, "Combination Switch Inspection" .

OK or NG

OK >> Replace the BCM. BCS-18, "Removal and Installation of BCM"
NG >> Check combination switch (lighting switch). Refer to LT-63, "Combination Switch Inspection" .

Front Turn Signal Lamp Does Not Operate

INFOID:0000000001704422

1. CHECK BULB

Verify the bulb standard of each turn signal lamp is correct. Refer to LT-113, "Exterior Lamp" .

OK or NG

OK >> GO TO 2.
NG >> Replace turn signal lamp bulb. Refer to LT-59, "Bulb Replacement for Front Turn Signal Lamp" .

2. CHECK FRONT TURN SIGNAL LAMP CIRCUIT

1. Turn ignition switch OFF.
2. Disconnect BCM connector and front combination lamp LH or RH connector.
3. Check continuity between BCM harness connector M20 (A) terminal 60 and front combination lamp LH harness connector E29 (B) terminal 4.

60 - 4 : Continuity should exist.

4. Check continuity between BCM harness connector M20 terminal 61 (A) and front combination lamp RH harness connector E30 (B) terminal 4.

61 - 4 : Continuity should exist.

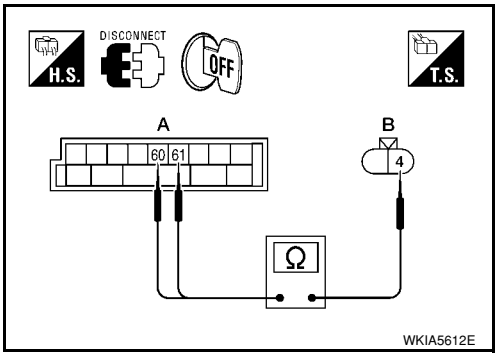

OK or NG

OK >> GO TO 3.

NG >> Repair harness or connector.

3. CHECK GROUND CIRCUIT

1. Check continuity between front combination lamp LH harness connector E29 terminal 5 and ground.

5 - Ground : Continuity should exist.

2. Check continuity between front combination lamp RH harness connector E30 terminal 5 and ground.

5 - Ground : Continuity should exist.

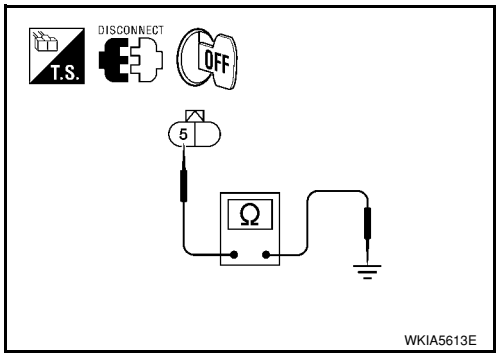

OK or NG

OK >> Inspect connection at front combination lamp.
NG >> Repair harness.

Rear Turn Signal Lamp Does Not Operate

INFOID:0000000001704423

1. CHECK BULB

Verify the bulb standard of each turn signal lamp is correct. Refer to LT-113, "Exterior Lamp" .

OK or NG

OK >> GO TO 2.
NG >> Replace turn signal lamp bulb. Refer to LT-59, "Bulb Replacement for Rear Turn Signal Lamp" .

2. CHECK REAR TURN SIGNAL LAMP CIRCUIT

1. Turn ignition switch OFF.
2. Disconnect BCM connector and rear combination lamp LH or RH connector.
3. Check continuity between BCM harness connector M20 (A) terminal 60 and rear combination lamp LH harness connector B25 (B) terminal 6.

60 - 6 : Continuity should exist.

4. Check continuity between BCM harness connector M20 (A) terminal 61 and rear combination lamp RH harness connector B107 (B) terminal 6.

61 - 6 : Continuity should exist.

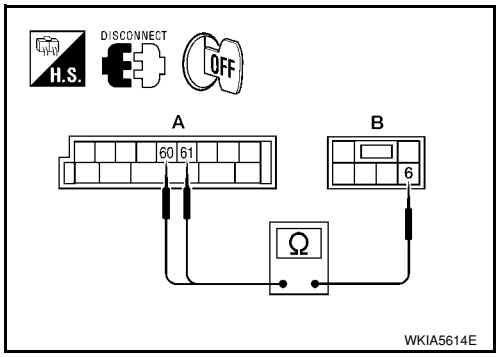

OK or NG

OK >> GO TO 3.
NG >> Repair harness or connector.

3. CHECK GROUND CIRCUIT

1. Check continuity between rear combination lamp LH harness connector B25 terminal 1 and ground.

1 - Ground : Continuity should exist.

2. Check continuity between rear combination lamp RH harness connector B107 terminal 1 and ground.

1 - Ground : Continuity should exist.

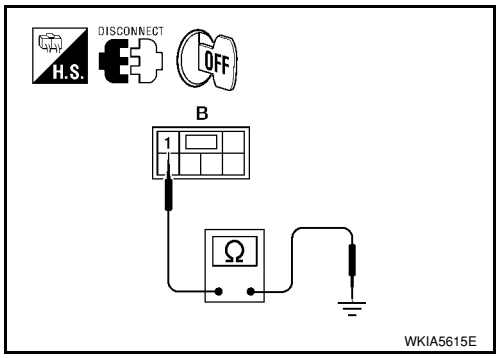

OK or NG

OK >> Check rear combination lamp connector for proper connection. Repair as necessary.
NG >> Repair harness or connector.

Hazard Warning Lamp Does Not Operate But Turn Signal Lamp Operates

INFOID:0000000001704424

1. CHECK HAZARD SWITCH INPUT SIGNAL

With CONSULT-III

1. Select “BCM” on CONSULT-III. Select “FLASHER” on “SELECT TEST ITEM” screen.
2. Select “DATA MONITOR” on “SELECT DIAG MODE” screen. Make sure that “HAZARD SW” turns ON-OFF linked with operation of hazard switch.

When hazard switch is in ON position : HAZARD SW ON

Without CONSULT-III

Check voltage between BCM harness connector and ground.

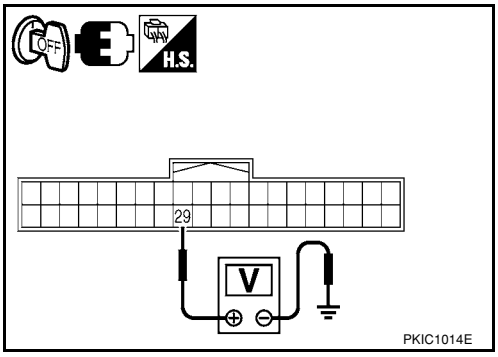

Terminal			Condition	Voltage
(+)		(–)		
BCM connector	Terminal			
M18	29	Ground	Hazard switch is ON	0V
			Hazard switch is OFF	Battery voltage

OK or NG

OK >> Replace BCM. Refer to BCS-18, "Removal and Installation of BCM" .

NG >> GO TO 2.

2. CHECK HAZARD SWITCH CIRCUIT

1. Turn ignition switch OFF.
2. Disconnect BCM connector and hazard switch connector.
3. Check continuity BCM harness connector M18 (A) and hazard switch harness connector M55 (B).

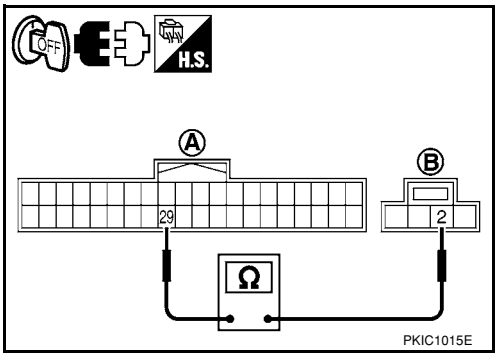

A		B		Continuity
Connector	Terminal	Connector	Terminal	
M18	29	M55	2	Yes

OK or NG

OK >> GO TO 3.

NG >> Repair harness or connector.

3. CHECK GROUND CIRCUIT

Check continuity between hazard switch harness connector M55 terminal 1 and ground.

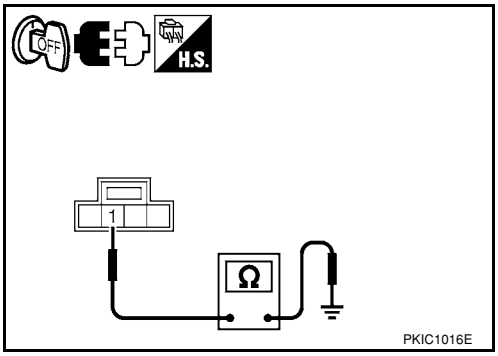

1 – Ground : Continuity should exist.

OK or NG

OK >> GO TO 4.

NG >> Repair harness or connector.

4. CHECK HAZARD SWITCH

1. Disconnect hazard switch connector.
2. Check continuity hazard switch terminals.

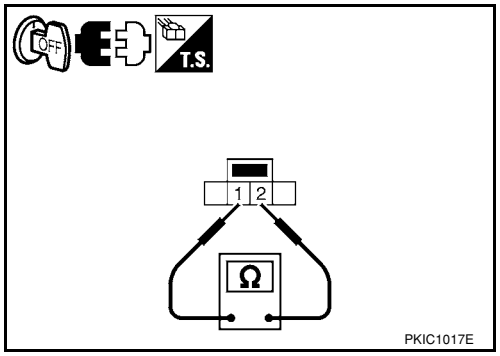

Terminal		Condition	Continuity
Hazard switch			
1	2	Hazard switch is ON	Yes
		Hazard switch is OFF	No

OK or NG

OK >> Replace BCM if hazard warning lamps do not operate after setting the connector again. Refer to BCS-18, "Removal and Installation of BCM" .

NG >> Replace hazard switch.

Turn Signal Indicator Lamp Does Not Operate

INFOID:0000000001704425

1. CHECK CAN COMMUNICATION SYSTEM

Check CAN communication. Refer to LAN-6 .

OK or NG

OK >> Replace combination meter. Refer to DI-20, "Removal and Installation" .

NG >> Repair as necessary.

Bulb Replacement for Front Turn Signal Lamp

INFOID:0000000001704426

Refer to LT-22, "Bulb Replacement" .

Bulb Replacement for Rear Turn Signal Lamp

INFOID:0000000001704427

Refer to LT-85, "Bulb Replacement" .

Removal and Installation of Front Turn Signal Lamp

INFOID:0000000001704428

Refer to LT-23, "Removal and Installation" .

Removal and Installation of Rear Turn Signal Lamp

INFOID:0000000001704429

Refer to LT-86, "Removal and Installation" .

LIGHTING AND TURN SIGNAL SWITCH

Removal and Installation

INFOID:0000000001704430

REMOVAL

1. Remove steering column cover. Refer to IP-10 .
2. While pressing pawls (A) in direction as shown, pull lighting and turn signal switch (1) toward LH door and disconnect from the base.

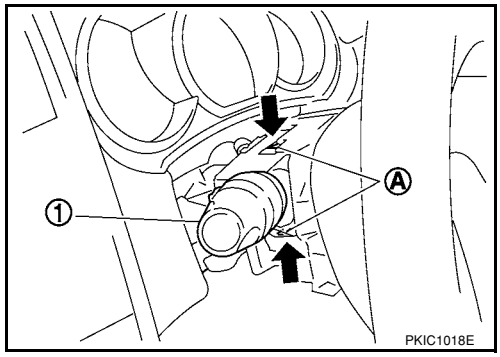

INSTALLATION

Installation is in the reverse order of removal.

HAZARD SWITCH

Removal and Installation

INFOID:0000000001704431

REMOVAL

1. Remove cluster lid C. Refer to IP-10 .
2. Disconnect hazard switch connector.
3. Press pawl (A) on reverse side and remove the hazard switch (1).

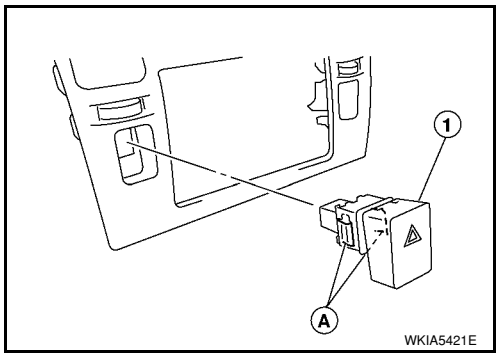

INSTALLATION

Installation is in the reverse order of removal.

COMBINATION SWITCH

Wiring Diagram - COMBSW -

INFOID:0000000001704432

LT-COMBSW-01

: DATA LINE

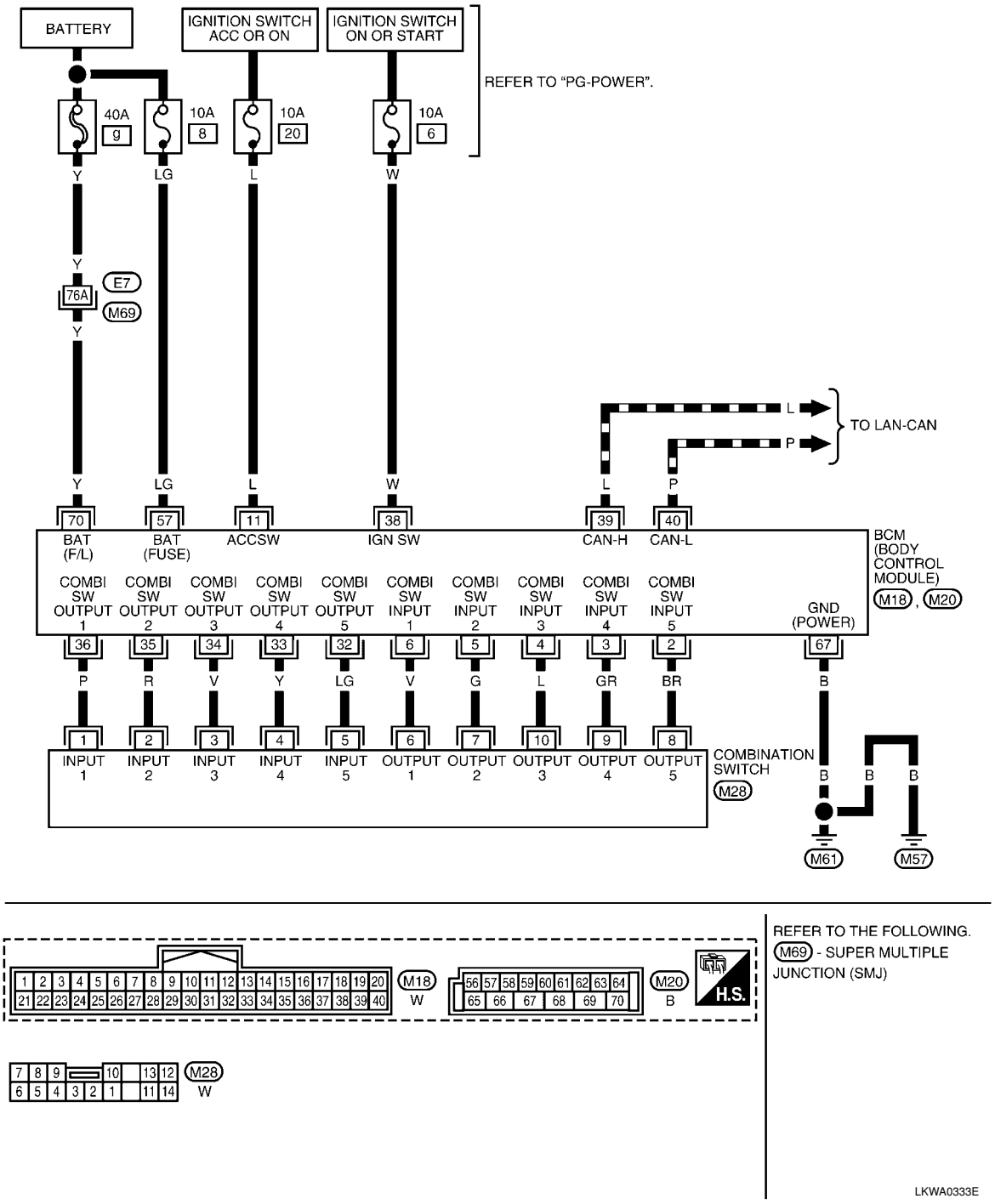

Combination Switch Reading Function

INFOID:0000000001704433

For details, refer to BCS-3, "System Description" .

Terminal and Reference Value for BCM

INFOID:0000000001704434

Refer to BCS-11, "Terminal and Reference Value for BCM" .

CONSULT-III Function (BCM)

INFOID:0000000001704435

Refer to LT-11, "CONSULT-III Function (BCM)" .

Combination Switch Inspection

INFOID:0000000001704436

1.SYSTEM CHECK

Referring to table below, check which system malfunctioning switch belongs to.

System 1	System 2	System 3	System 4	System 5
—	FRONT WASHER	FRONT WIPER LO	TURN LH	TURN RH
FRONT WIPER HI	—	FRONT WIPER INT	PASSING	HEAD LAMP 1
INT VOLUME 1	—	—	HEAD LAMP 2	HI BEAM
—	INT VOLUME 3	—	—	LIGHT SW 1ST
INT VOLUME 2	—	—	FRONT FOG	—

>> Check the system to which the switch belongs, and GO TO 2.

2.SYSTEM CHECK

With CONSULT-III

CAUTION:

If CONSULT-III is used with no connection of CONSULT-III CONVERTER, malfunctions might be detected in self-diagnosis depending on control unit which carry out CAN communication.

1. Connect CONSULT-III, and select “COMB SW” on “SELECT TEST ITEM” screen.
2. Select “DATA MONITOR”.
3. Select “START”, and confirm that other switches in the system operate normally.
   Example: When turn signal LH is inoperative, confirm that PASSING, HEAD LAMP 2 or FRONT FOG (if equipped) turn ON-OFF normally.

Without CONSULT-III

Operating combination switch, and confirm that other switches in the system operate normally.
Example: When a turn signal switch is inoperative, confirm that FRONT WIPER LO or FRONT WIPER INT turn ON-OFF normally.

Check results

Other switches in the system operate normally.>>Replace lighting switch or wiper switch.
Other switches in the system do not operate normally.>>GO TO 3.

3.HARNESS INSPECTION

1. Turn ignition switch OFF.
2. Disconnect BCM connector and combination switch connector.
3. Check for continuity between BCM harness connector of the suspect system and the corresponding combination switch harness connector.

Suspect system	A			B		Continuity
	Connector	Terminal		Connector	Terminal	
1	M18	Input 1	6	M28	6	Yes
		Output 1	36		1	
2		Input 2	5		7	
		Output 2	35		2	
3		Input 3	4		10	
		Output 3	34		3	
4		Input 4	3		9	
		Output 4	33		4	
5		Input 5	2		8	
		Output 5	32		5	

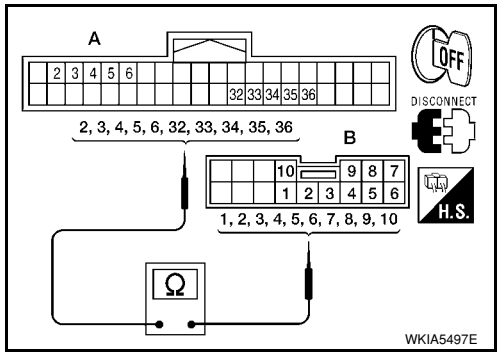

4. Check for continuity between of BCM harness connector in suspect system and ground.

Suspect system	BCM				Continuity
	Connector	Terminal			
1	M18	Input 1	6	Ground	No
		Output 1	36		
2		Input 2	5		
		Output 2	35		
3		Input 3	4		
		Output 3	34		
4		Input 4	3		
		Output 4	33		
5		Input 5	2		
		Output 5	32		

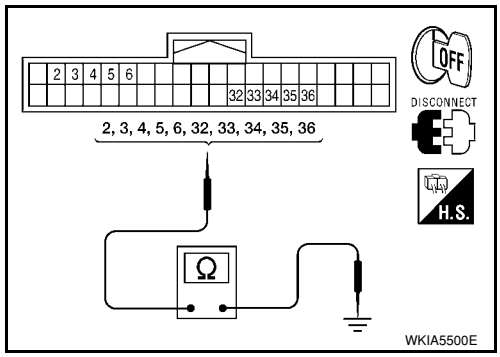

OK or NG

OK >> GO TO 4.
NG >> Check harness between BCM and combination switch for open or short circuit.

4. CHECK BCM OUTPUT TERMINAL

1. Connect BCM and combination switch connectors.
2. Turn ignition switch ON.
3. Turn lighting switch and wiper switch to OFF position.
4. Set wiper dial position 4.
5. Check BCM output terminal voltage waveform of suspect system.

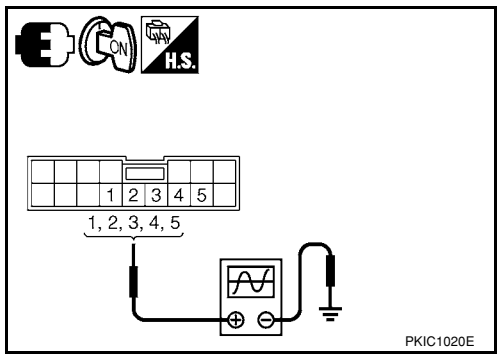

Suspect system	Terminal (+) Combination switch connector	Terminal (+) Terminal	Terminal (–)	Reference value
1	M28	1	Ground	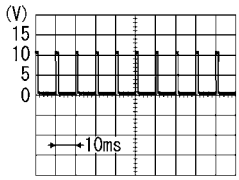 PKIB4958J 1.2V
2		2		
3		3		
4		4		
5		5		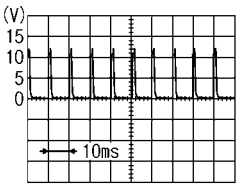 PKIB8643J 1.2V

OK or NG

OK >> Open circuit in combination switch, GO TO 5.
NG >> Replace BCM. Refer to BCS-18, "Removal and Installation of BCM" .

5. COMBINATION SWITCH INSPECTION

Referring to table below, perform combination switch inspection.

Procedure									
1	2		3	4		5	6		7
Re-place lighting switch	Confirm check results	OK	INSPECTION END	Confirm check results	OK	INSPECTION END	Confirm check results	OK	INSPECTION END
		NG	Replace wiper switch		NG	Replace switch base		NG	Confirm symptom again

>> INSPECTION END

Removal and Installation

INFOID:0000000001704437

Refer to LT-60 .

STOP LAMP

Wiring Diagram - STOP/L

INFOID:0000000001704438

HATCHBACK

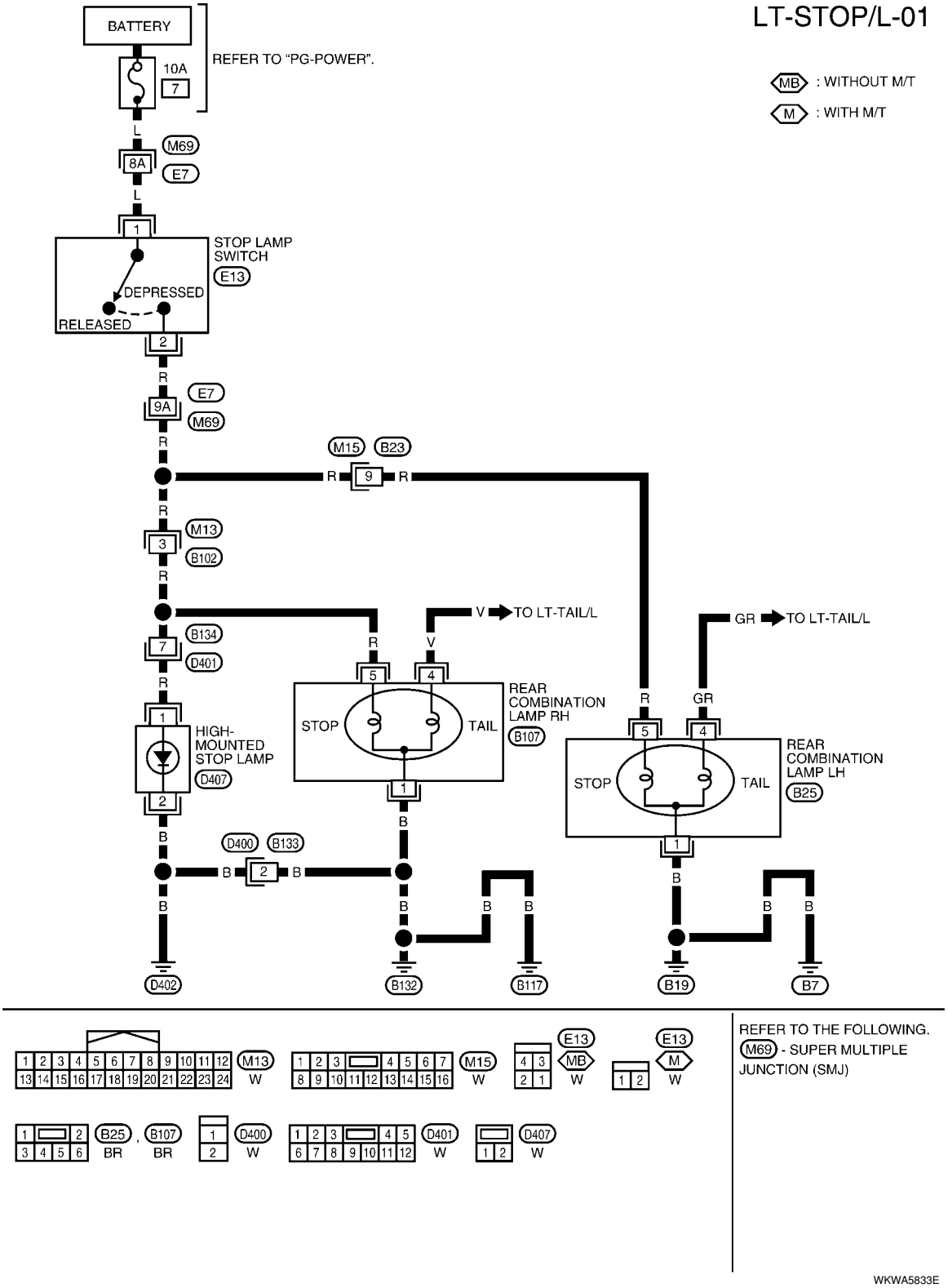

Wiring Diagram - STOP/L

INFOID:0000000001704439

SEDAN

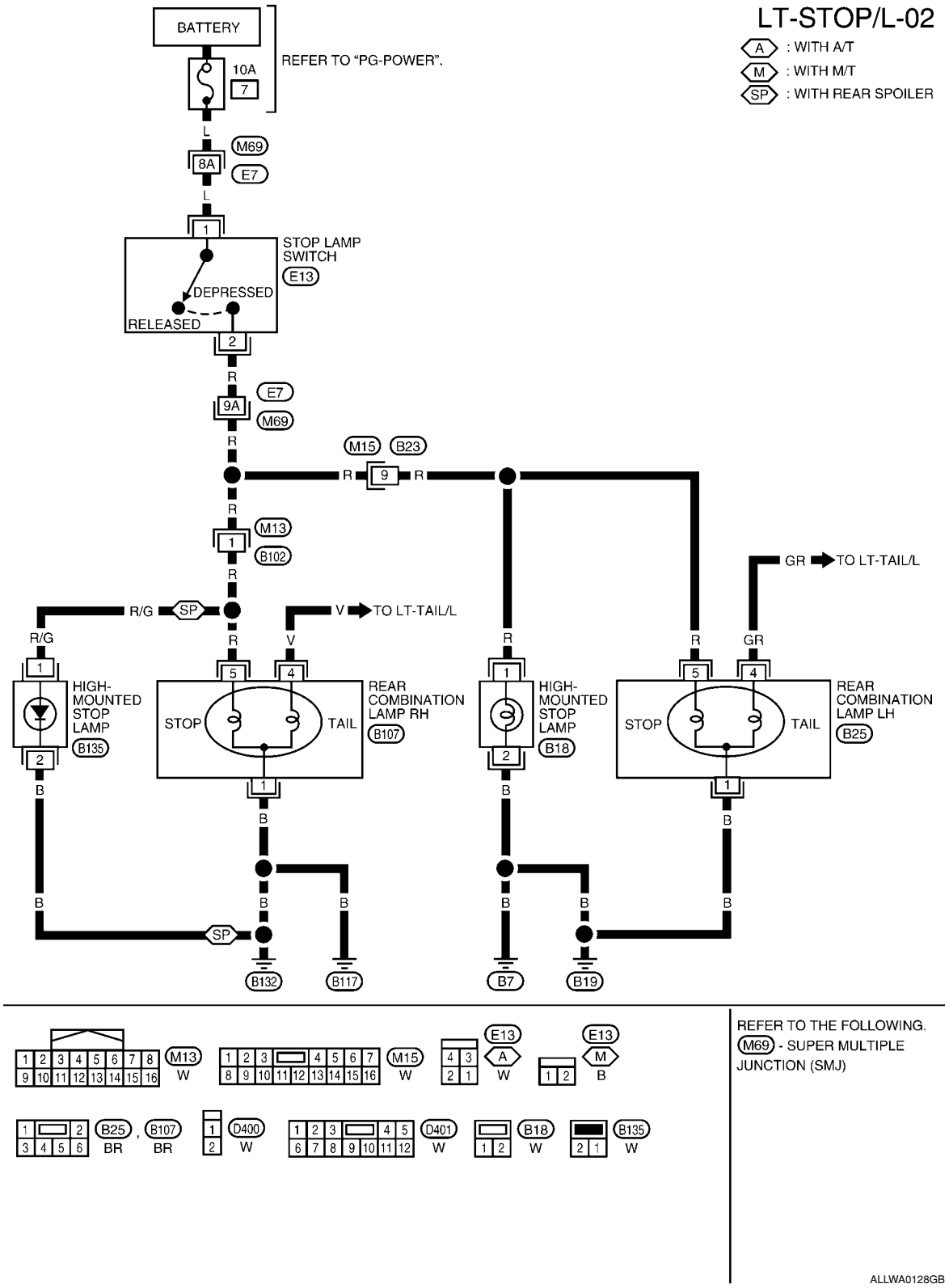

Bulb Replacement for High-Mounted Stop Lamp

INFOID:0000000001704440

HATCHBACK

The LED element is not serviced separately, the high-mounted stop lamp must be replaced as an assembly. Refer to LT-68, "Removal and Installation of High-Mounted Stop Lamp".

SEDAN

1. Remove the high-mounted stop lamp bulb socket (1) and remove the high-mounted stop lamp (2).

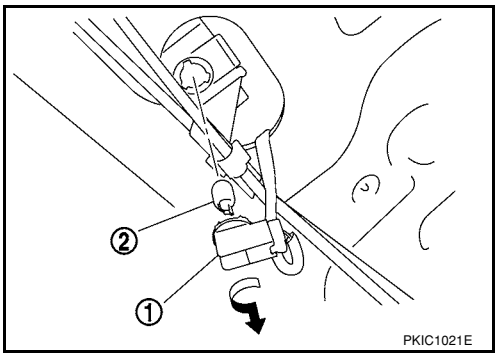

2. Installation is in the reverse order of removal.

Bulb Replacement for Rear Combination Lamp for Stop Lamp

INFOID:0000000001704441

Refer to LT-85, "Bulb Replacement".

Removal and Installation of High-Mounted Stop Lamp

INFOID:0000000001704442

HATCHBACK

Removal

1. Remove the rear hatch finish panel. Refer to EI-51.
2. Disconnect the high-mounted stop lamp connector.
3. Remove the nuts and remove the high-mounted stop lamp from rear hatch.

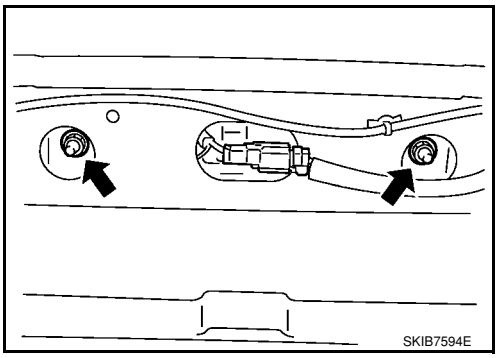

Installation

Installation is in the reverse order of removal.

CAUTION:

Properly seal the high-mounted stop lamp base to the rear hatch to prevent water leaks.

SEDAN

Removal

1. Remove the rear parcel shelf. Refer to EI-42, "Removal and Installation".

2. Remove the high-mounted stop lamp screws (A) and remove the high-mounted stop lamp (1).

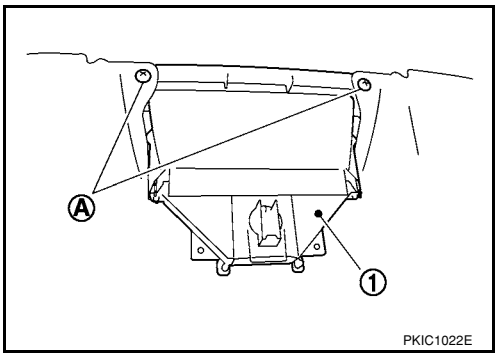

3. Remove the high-mounted stop lamp finisher screws (A) and remove the high-mounted stop lamp finisher (1).

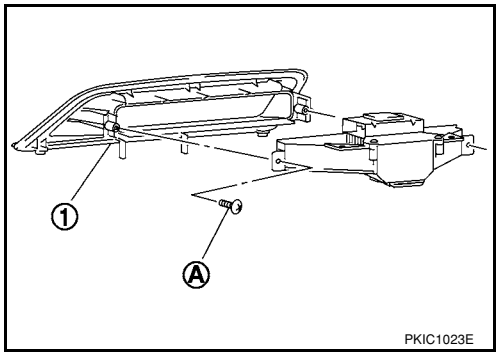

Installation

Installation is in the reverse order of removal.

Removal and Installation of Rear Combination Lamp for Stop Lamp

INFOID:0000000001704443

Refer to LT-86, "Removal and Installation".

BACK-UP LAMP

Wiring Diagram - BACK/L -

INFOID:0000000001704444

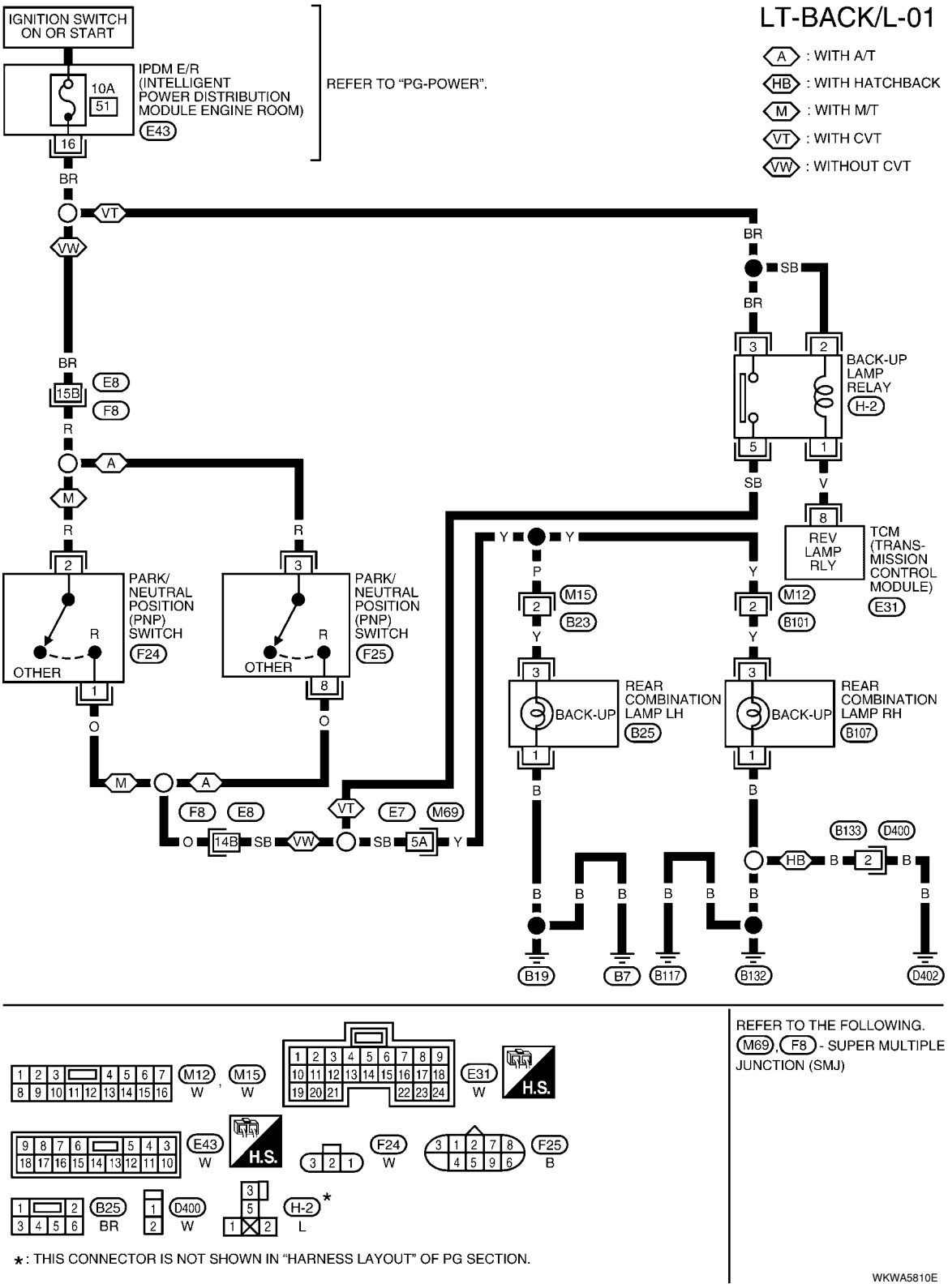

Bulb Replacement

INFOID:0000000001704445

Refer to LT-85, "Bulb Replacement" .

Removal and Installation

INFOID:0000000001704446

Refer to LT-86, "Removal and Installation" .

PARKING, LICENSE PLATE AND TAIL LAMPS

Component Parts and Harness Connector Location

INFOID:0000000001704447

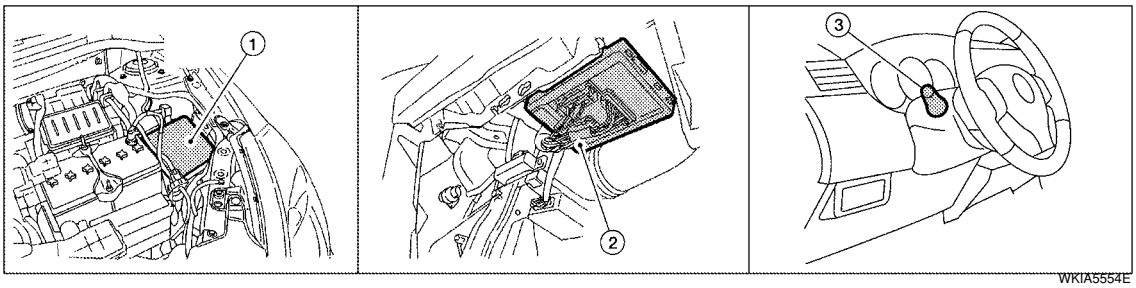

1. IPDM E/R E45, E46 and E48
2. BCM M18 and M20 (view with glove box removed)
3. Combination switch (lighting switch) M28

System Description

INFOID:0000000001704448

The control of the parking, license plate and tail lamp operation is dependent upon the position of lighting switch. When the lighting switch is placed in the 1ST position, the BCM (body control module) receives input signal requesting the parking, license plate and tail lamps to illuminate. This input signal is communicated to the IPDM E/R (intelligent power distribution module engine room) via the CAN communication lines. The CPU (central processing unit) located in the IPDM E/R controls the tail lamp relay coil. This relay, when energized, directs power to parking, license plate and tail lamps, which then illuminate.

Power is supplied at all times

- to ignition relay located in IPDM E/R,
- to tail lamp relay located in IPDM E/R,
- through 15A fuse (No. 52, located in IPDM E/R) and
- through 20A fuse (No. 53, located in IPDM E/R)
- to the CPU located in the IPDM E/R,
- through 40A fusible link (letter **g** , located in fuse and fusible link block)
- to BCM terminal 70,
- through 10A fuse [No. 8, located in fuse block (J/B)],
- to BCM terminal 57.

With the ignition switch in the ON or START position, power is supplied

- through 10A fuse [No. 6, located in fuse block (J/B)]
- to BCM terminal 38,
- to ignition relay located in IPDM E/R and
- through the ignition relay
- to the CPU of the IPDM E/R.

With the ignition switch in the ACC or ON position, power is supplied

- through 10A fuse [No. 20, located in fuse block (J/B)]
- to BCM terminal 11.

Ground is supplied

- to BCM terminal 67
- through grounds M20 and M61,
- to IPDM E/R terminals 59 and 39
- through grounds E15 and E24.

OPERATION BY LIGHTING SWITCH

With the lighting switch in the 1ST or 2ND position, the BCM receives an input signal requesting parking, license plate and tail lamps to illuminate. This input signal is communicated to the IPDM E/R via the CAN communication lines. The CPU, located in the IPDM E/R, controls the tail lamp relay coil. When energized, the tail lamp relay directs power

- through 10A fuse (No. 37, located in IPDM E/R),
- through IPDM E/R terminal 26
- to front combination lamp LH terminal 6, and
- through IPDM E/R terminal 27

- to front combination lamp RH terminal 6,
- through IPDM E/R terminal 28
- to rear combination lamp LH terminal 4 and
- to license plate lamp LH and RH terminal 1,
- through IPDM E/R terminal 29
- to rear combination lamp RH terminal 4.

Ground is supplied

- to front combination lamp LH and RH terminal 7
- through grounds E15 and E24,
- to rear combination lamp LH terminal 1 and
- to license plate lamp LH and RH terminal 2
- through grounds B7 and B19, and
- to rear combination lamp RH terminal 1
- through grounds B117, B132 (all models) and D402 (with hatchback).

With power and ground supplied, parking, license plate and tail lamps illuminate.

COMBINATION SWITCH READING FUNCTION

Refer to BCS-3, "System Description" .

EXTERIOR LAMP BATTERY SAVER CONTROL

When the combination switch (lighting switch) is in the 1ST (or 2ND) position and the ignition switch is turned from ON or ACC to OFF, the battery saver control feature is activated.

Under this condition, the parking, license and tail lamps remain illuminated for 5 minutes, then the parking, license plate and tail lamps are turned off.

Exterior lamp battery saver control mode can be changed by the function setting of CONSULT-III.

CAN Communication System Description

INFOID:0000000001704449

Refer to LAN-6, "System Description" .

Schematic

INFOID:0000000001704450

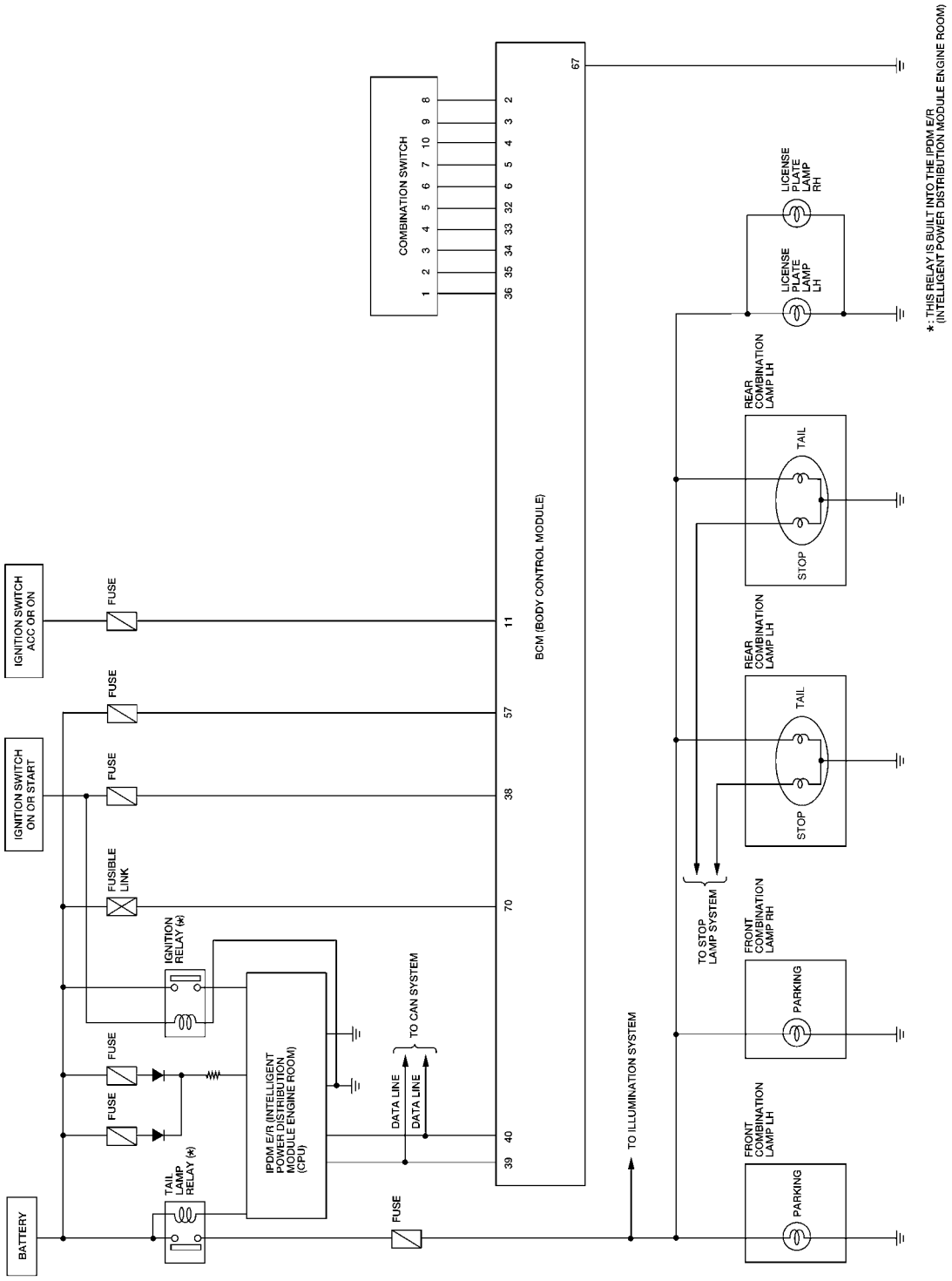

WKWA4975E

Wiring Diagram - TAIL/L -

INFOID:0000000001704451

LT-TAIL/L-01

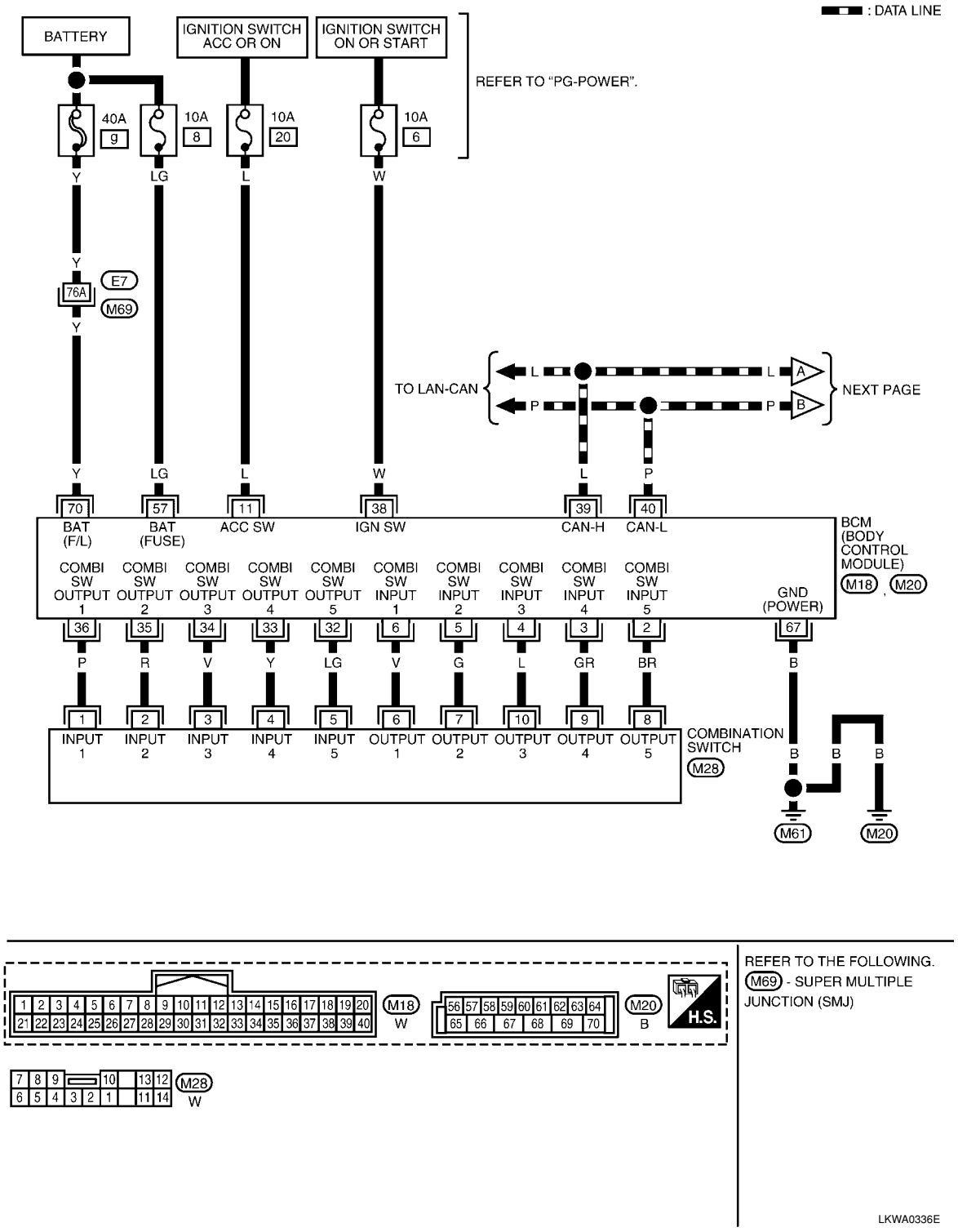

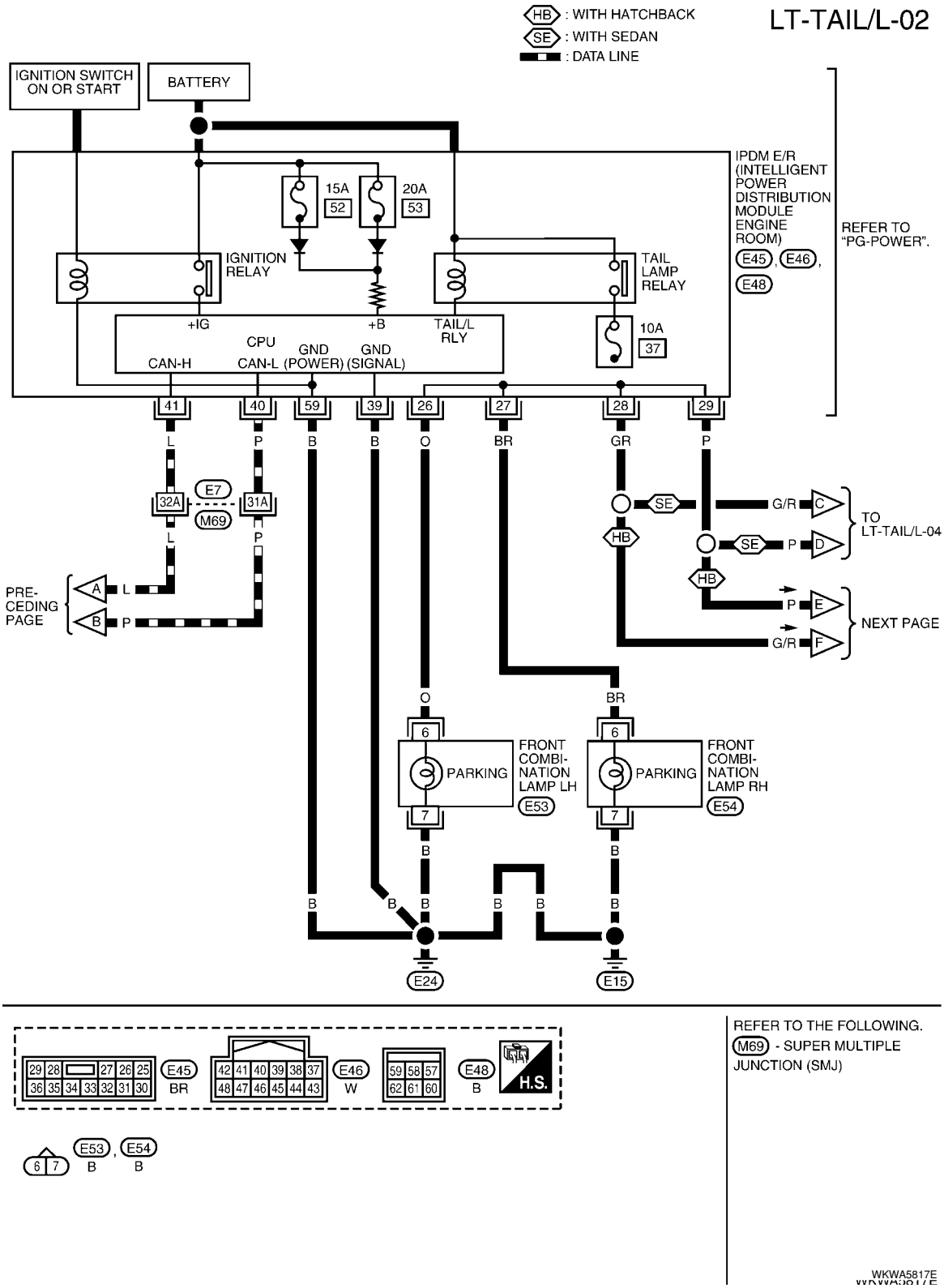
HB : WITH HATCHBACK
SE : WITH SEDAN
: DATA LINE
LT-TAIL/L-02
IGNITION SWITCH ON OR START
BATTERY
IPDM E/R (INTELLIGENT POWER DISTRIBUTION MODULE ENGINE ROOM)
E45, E46, E48
REFER TO "PG-POWER".
15A 52
20A 53
IGNITION RELAY
TAIL LAMP RELAY
+IG
+B
TAIL/L RLY
10A 37
CPU
CAN-H
CAN-L
GND (POWER)
GND (SIGNAL)
41
40
59
39
26
27
28
29
L
P
B
B
O
BR
GR
P
32A
E7
M69
31A
SE
HB
G/R
C
D
TO LT-TAIL/L-04
PRE-CEDING PAGE
A
B
E
F
NEXT PAGE
6
7
PARKING
FRONT COMBI-NATION LAMP LH
E53
FRONT COMBI-NATION LAMP RH
E54
E24
E15
E45 BR
E46 W
E48 B
H.S.
E53 B, E54 B
REFER TO THE FOLLOWING.
M69 - SUPER MULTIPLE JUNCTION (SMJ)
WKWA5817E

Hatchback

LT-TAIL/L-03

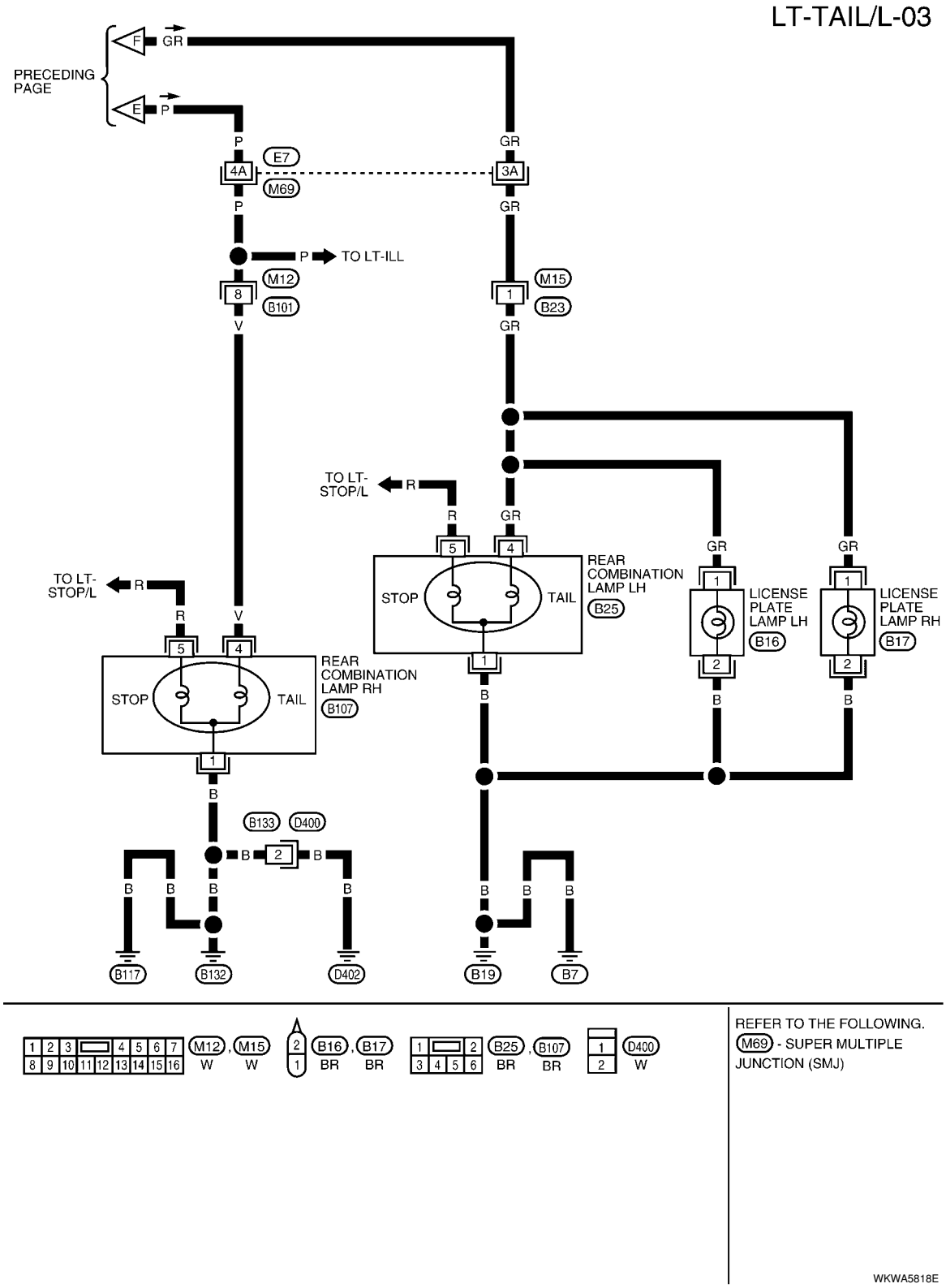

Sedan

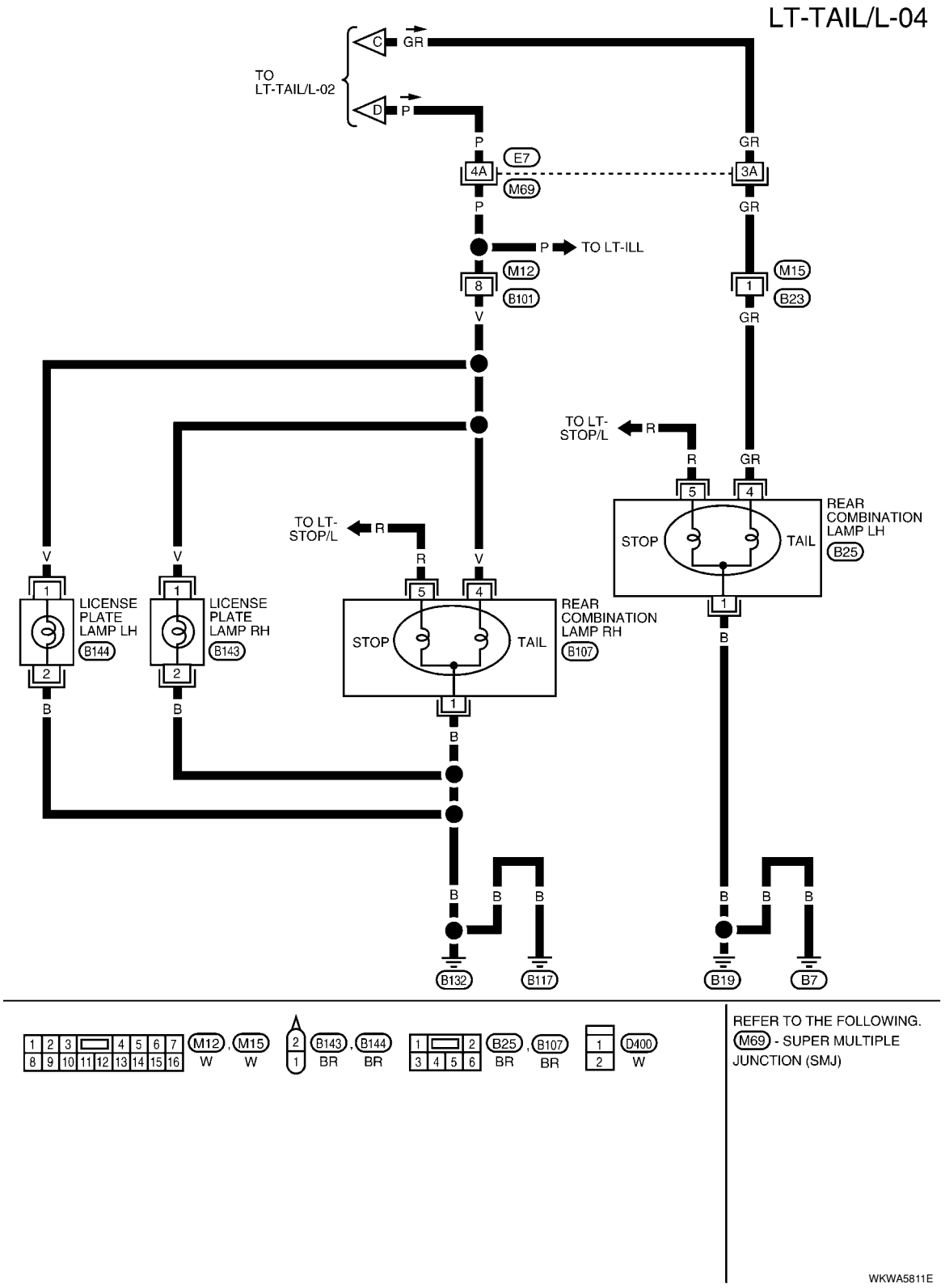

Terminal and Reference Value for BCM

INFOID:0000000001704452

Refer to BCS-11, "Terminal and Reference Value for BCM" .

Terminal and Reference Value for IPDM E/R

INFOID:0000000001704453

Refer to PG-23, "Terminal and Reference Value for IPDM E/R" .

How to Proceed with Trouble Diagnosis

INFOID:0000000001704454

1. Confirm the symptom or customer complaint.
2. Understand operation description and function description. Refer to LT-72, "System Description" .
3. Perform the preliminary check. Refer to LT-79, "Preliminary Check" .
4. Check symptom and repair or replace the cause of the malfunction.
5. Do the parking, license plate and tail lamps operate normally? If YES, GO TO 6. If NO, GO TO 4.
6. Inspection End.

Preliminary Check

INFOID:0000000001704455

CHECK POWER SUPPLY AND GROUND CIRCUIT FOR BCM

Refer to BCS-15, "BCM Power Supply and Ground Circuit Inspection" .

CHECK POWER SUPPLY AND GROUND CIRCUIT FOR IPDM E/R

Refer to PG-25, "IPDM E/R Power/Ground Circuit Inspection" .

CONSULT-III Function (BCM)

INFOID:0000000001704456

Refer to LT-11, "CONSULT-III Function (BCM)" .

CONSULT-III Function (IPDM E/R)

INFOID:0000000001704457

Refer to LT-12, "CONSULT-III Function (IPDM E/R)" .

Parking, License Plate and Tail Lamps Do Not Illuminate

INFOID:0000000001704458

1. CHECK TAIL LAMP FUSE

Inspect tail lamp 10A fuse (No. 37, located in IPDM E/R).

OK or NG

OK >> GO TO 2.
NG >> Repair harness.

2. CHECK COMBINATION SWITCH INPUT SIGNAL

With CONSULT-III

1. Select “BCM” on CONSULT-III. Select “HEAD LAMP” on “SELECT TEST ITEM” screen.
2. Select “DATA MONITOR” on “SELECT DIAG MODE” screen. Make sure “LIGHT SW 1ST” turns ON-OFF linked with operation of lighting switch.

When lighting switch is 1ST position	**: LIGHT SW 1ST ON**

Without CONSULT-III

Refer to LT-63, "Combination Switch Inspection" .

OK or NG

OK >> GO TO 3.
NG >> Check combination switch (lighting switch). Refer to LT-63, "Combination Switch Inspection" .

3. ACTIVE TEST

With CONSULT-III

1. Select “IPDM E/R” on CONSULT-III, and select “ACTIVE TEST” on “SELECT DIAG MODE” screen.
2. Select “EXTERNAL LAMPS” on “SELECT TEST ITEM” screen.
3. Touch “TAIL” on "ACTIVE TEST" screen.
4. Make sure parking, license plate and tail lamps operate.

Parking, license plate and tail lamps should operate.

Without CONSULT-III

1. Start auto active test. Refer to PG-19, "Auto Active Test" .
2. Make sure parking, license plate and tail lamps operate.

Parking, license plate and tail lamps should operate.

OK or NG

OK >> GO TO 4.
NG >> GO TO 5.

4. CHECK IPDM E/R

1. Select “IPDM E/R” on CONSULT-III, and select “DATA MONITOR” on “SELECT DIAG MODE” screen.
2. Make sure “TAIL&CLR REQ” turns ON when lighting switch is in 1ST position.

When lighting switch is 1ST position : TAIL&CLR REQ ON

OK or NG

OK >> Replace IPDM E/R. Refer to PG-26, "Removal and Installation of IPDM E/R" .
NG >> Replace BCM. Refer to BCS-18, "Removal and Installation of BCM" .

5. CHECK INPUT SIGNAL

With CONSULT-III

1. Turn ignition switch OFF.
2. Disconnect front combination lamp, license plate lamp and rear combination lamp connectors.
3. Select “IPDM E/R” on CONSULT-III, and select “ACTIVE TEST” on “SELECT DIAG MODE” screen.
4. Select “EXTERNAL LAMPS” on “SELECT TEST ITEM” screen.
5. Touch “TAIL” on "ACTIVE TEST" screen.
6. When tail lamp relay is operating, check voltage between front combination lamp, license plate lamp and rear combination lamp harness connector and ground.

Without CONSULT-III

1. Turn ignition switch OFF.
2. Disconnect front combination lamp, license plate lamp and rear combination lamp connectors.
3. Start auto active test. Refer to PG-19, "Auto Active Test" .
4. When tail lamp relay is operating, check voltage between front combination lamp, license plate lamp and rear combination lamp harness connector and ground.

Terminal				Voltage
(+)			(–)	
Front combination lamp connector		Terminal		
RH	E54	6	Ground	Battery voltage
LH	E53			

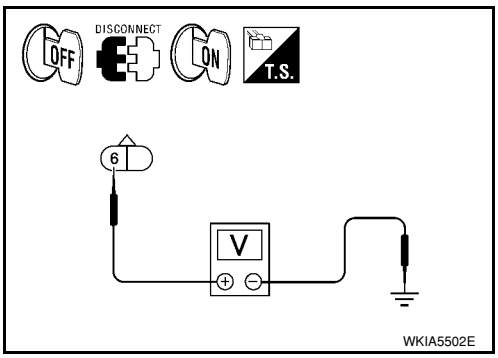

Terminal				Voltage
(+)			(–)	
License plate lamp connector		Terminal		
RH	B17 (Hatchback) B144 (Sedan)	1	Ground	Battery voltage
LH	B16 (Hatchback) B143 (Sedan)			

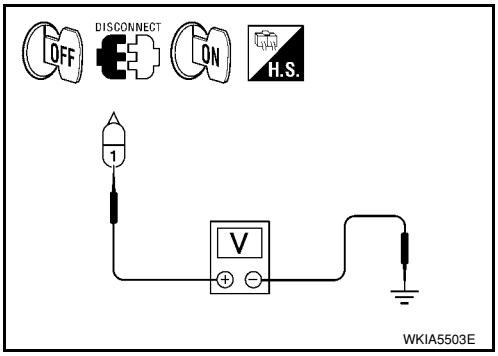

Terminal				Voltage
(+)			(–)	
Rear combination lamp connector (Tail lamp)		Terminal		
RH	B107	4	Ground	Battery voltage
LH	B25			

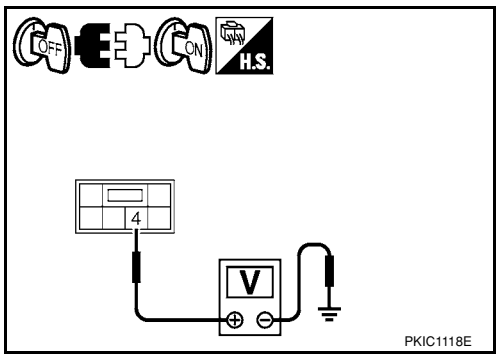

OK or NG

OK >> GO TO 7.
NG >> GO TO 6.

6. CHECK PARKING, LICENSE PLATE AND TAIL LAMP CIRCUIT

1. Turn ignition switch OFF.
2. Disconnect IPDM E/R connector.
3. Check continuity between IPDM E/R harness connector (A) and front combination lamp harness connector (B).

A		B			Continuity
Connector	Terminal	Connector		Terminal	
E45	27	RH	E54	6	Yes
	26	LH	E53		

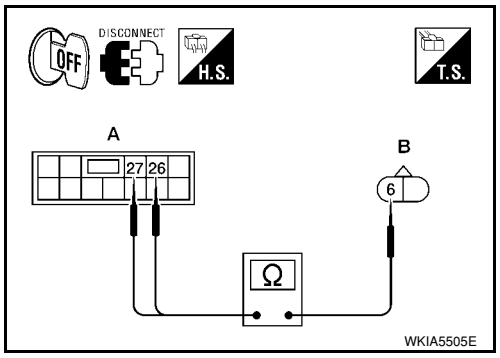

4. Check continuity between IPDM E/R harness connector (A) and license plate lamp harness connector (B).

A		B			Continuity
Connector	Terminal	Connector		Terminal	
E45	28	RH	B17 (Hatchback) B144 (Sedan)	1	Yes
		LH	B16 (Hatchback) B143 (Sedan)		

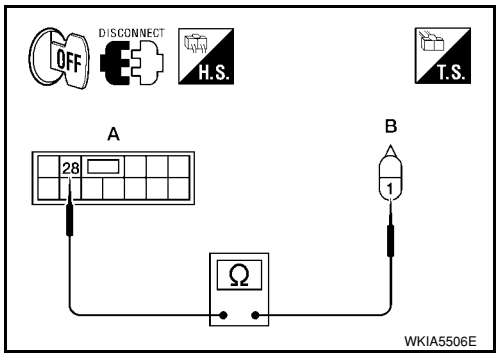

5. Check continuity between IPDM E/R harness connector (A) and rear combination lamp harness connector (B).

A		B			Continuity
Connector	Terminal	Connector		Terminal	
E45	29	RH	B107	4	Yes
	28	LH	B25		

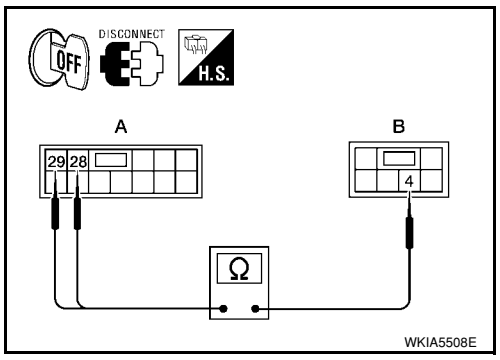

OK or NG

OK >> Replace IPDM E/R. Refer to PG-26, "Removal and Installation of IPDM E/R" .
NG >> Repair harness or connector.

7. CHECK PARKING, LICENSE PLATE AND TAIL LAMPS GROUND CIRCUIT

1. Check continuity between front combination lamp harness connector and ground.

Front combination lamp connector		Terminal		Continuity
RH	E54	7	Ground	Yes
LH	E53			

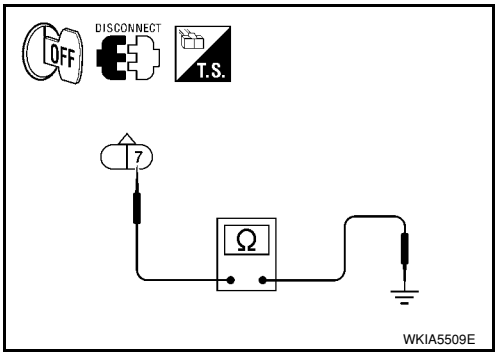

2. Check continuity between license plate lamp harness connector and ground.

License plate lamp connector		Terminal		Continuity
RH	B17 (Hatchback) B144 (Sedan)	2	Ground	Yes
LH	B16 (Hatchback) B143 (Sedan)			

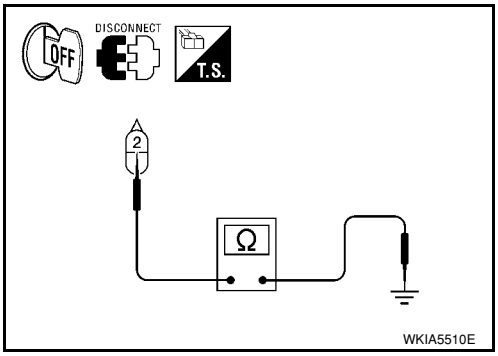

3. Check continuity between rear combination lamp harness connector and ground.

Rear combination lamp connector		Terminal		Continuity
RH	B107	1	Ground	Yes
LH	B25			

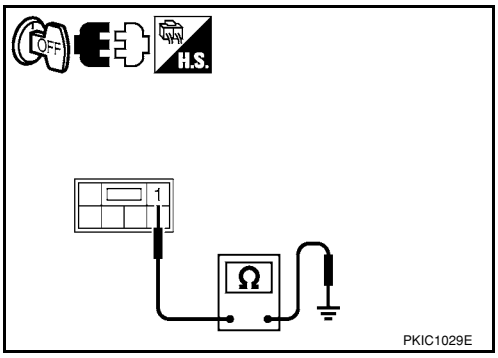

OK or NG

OK >> Check bulbs.
NG >> Repair harness or connector.

Parking, License Plate and Tail Lamps Do Not Turn OFF (After Approx. 10 Minutes)

INFOID:0000000001704459

- This symptom is related to the ignition relay in IPDM E/R. Refer to PG-17, "Function of Detecting Ignition Relay Malfunction" .
- Select “BCM” on CONSULT-III. Select “HEADLAMP” on “SELECT TEST ITEM” screen and select “DATA MONITOR” on “SELECT DIAG MODE” screen. If “LIGHT SW 1ST” is OFF when lighting switch is OFF, replace IPDM E/R.

Bulb Replacement

INFOID:0000000001704460

PARKING LAMP

Refer to LT-85, "Bulb Replacement".

LICENSE PLATE LAMP

Hatchback

1. Remove the license plate lamp. Refer to LT-83, "Removal and Installation".
2. Turn bulb socket counterclockwise and unlock it.
3. Remove bulb from the socket.
4. Installation is in the reverse order of removal.

Sedan

1. Remove the trunk lid finisher. Refer to EI-30, "Removal and Installation".

2. Remove the license plate lamp bulb socket (1) and remove the license plate lamp bulb (2).
3. Installation is in the reverse order of removal.

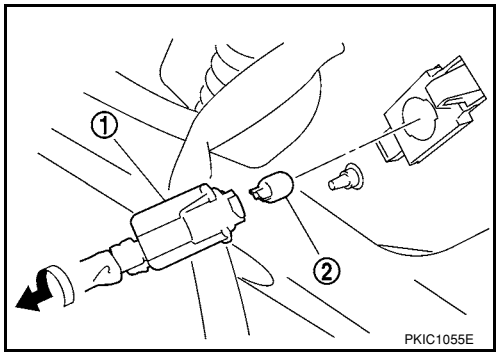

TAIL LAMP

Refer to LT-85, "Bulb Replacement".

Removal and Installation

INFOID:0000000001704461

PARKING LAMP

Refer to LT-86, "Removal and Installation".

LICENSE PLATE LAMP-HATCHBACK

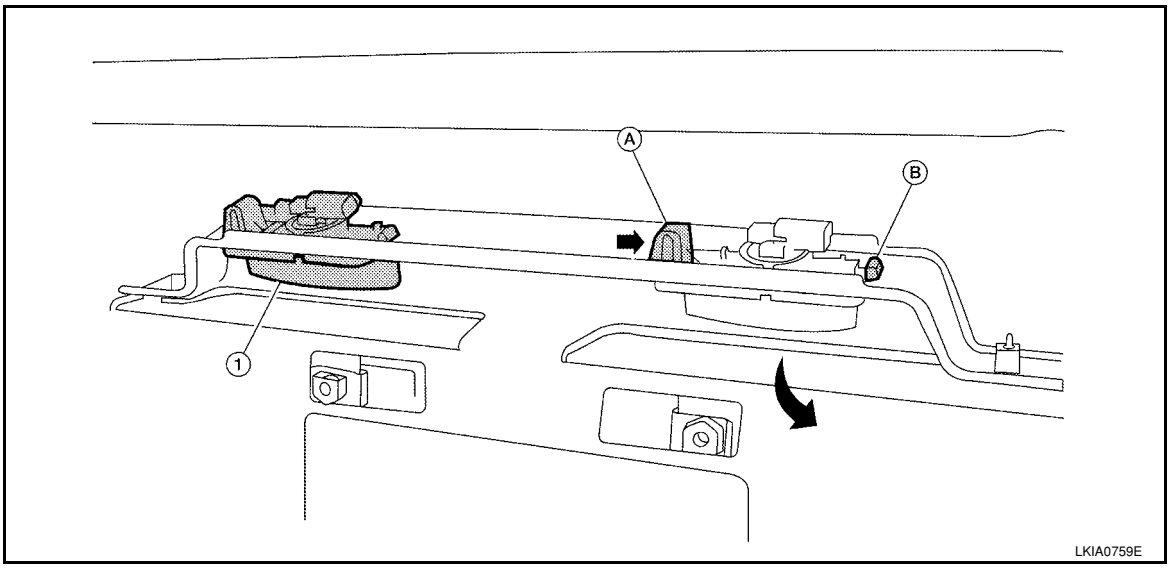

1. License plate lamp
A. Pawl
B. Hook

Removal

1. Press the license plate lamp pawl on the side of the rear bumper fascia, then swing the license plate lamp down to release the license plate lamp hook from the rear bumper fascia.
2. Disconnect the license plate lamp connector and remove the licence plate lamp.

Installation

Installation is in the reverse order of removal.

LICENSE PLATE LAMP-SEDAN

Removal

1. Remove the license plate lamp finisher. Refer to EI-53, "Removal and Installation".

2. Remove the license plate lamp assembly (1).

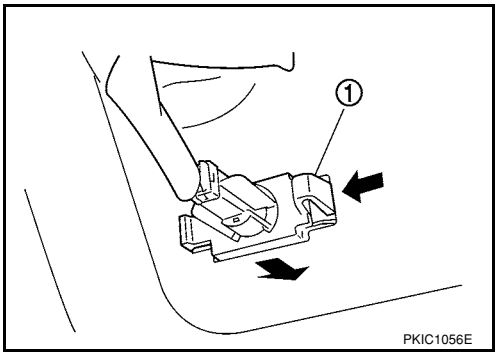

Installation
Installation is in the reverse order of removal.

TAIL LAMP

Refer to LT-86, "Removal and Installation".

REAR COMBINATION LAMP

Component

INFOID:0000000001704462

Hatchback

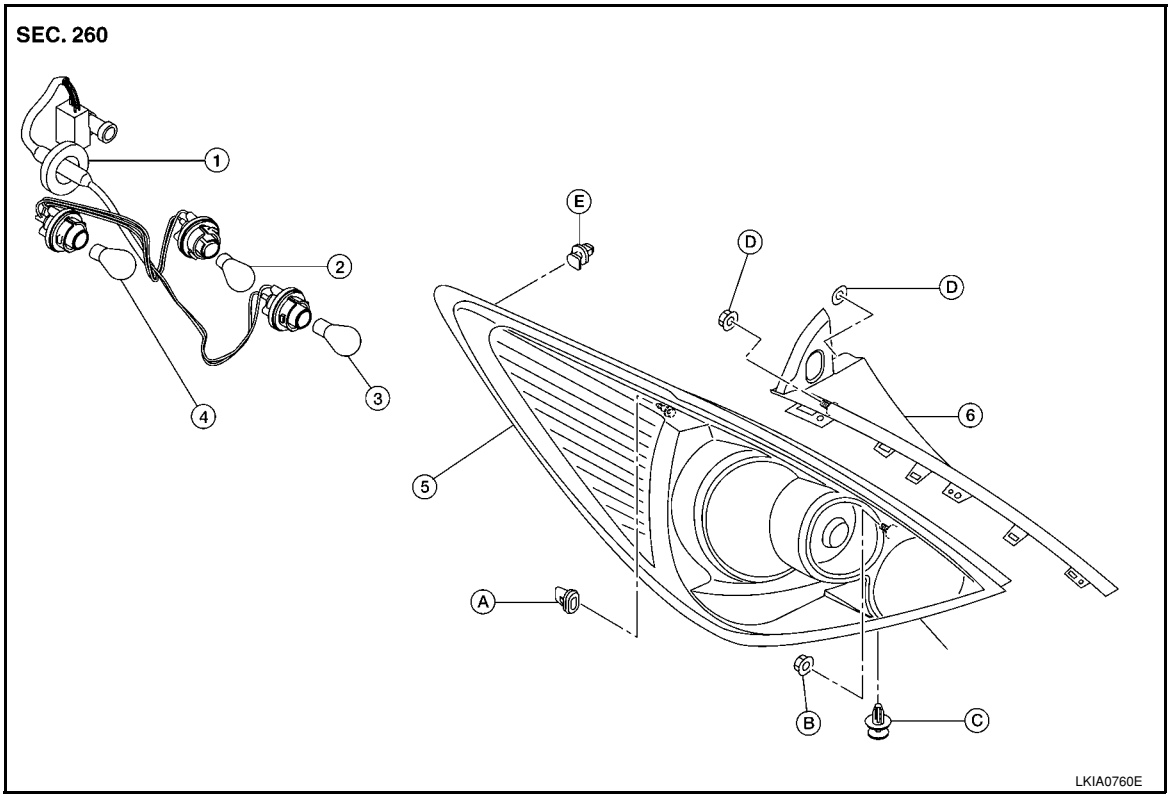

1.	Rear combination lamp harness	2.	Turn signal lamp bulb	3.	Back-up lamp bulb
4.	Stop/tail lamp bulb	5.	Rear combination lamp housing assembly	6.	Bumper stay
A.	Grommet	B.	Nut	C.	Clip
D.	Nuts	E.	Clip		

Bulb Replacement

INFOID:0000000001704463

HATCHBACK

1. Remove the rear combination lamp. Refer to LT-86, "Removal and Installation".
2. Turn bulb socket counterclockwise and unlock it.
3. Remove bulb.
4. Installation is in the reverse order of removal.

SEDAN

1. Remove trunk side finisher. Refer to EI-53, "Removal and Installation".
2. Turn bulb socket counterclockwise and unlock it.
3. Remove the stop/tail lamp bulb (1), turn signal lamp bulb (2), and the back-up lamp bulb (3).
4. Installation is in the reverse order of removal.

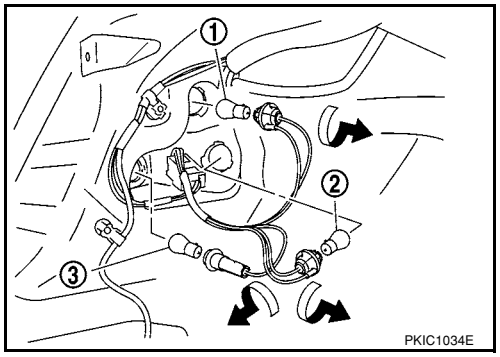

Removal and Installation

INFOID:0000000001704464

HATCHBACK

Removal

1. Remove rear combination lamp nuts.
2. Pull the rear combination lamp toward rear of the vehicle and remove from the vehicle.
3. Disconnect rear combination lamp connector, and remove rear combination lamp.

Installation
Installation is in the reverse order of removal.

SEDAN

Removal

1. Remove trunk side finisher. Refer to EI-51, "Removal and Installation".
2. Remove the rear combination lamp nuts (1).
3. Remove the rear combination lamp (2).
4. Remove the rear combination lamp seal (3).

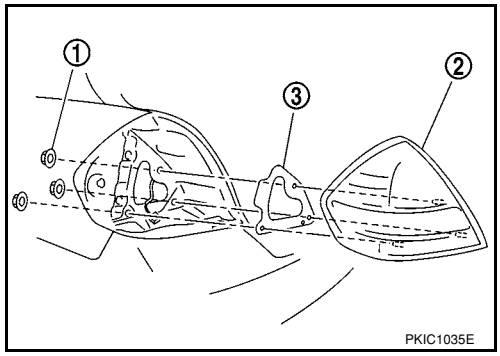

Installation
Installation is in the reverse order of removal.

Disassembly and Assembly

INFOID:0000000001704465

DISSASEMBLY

1. Remove the rear combination lamp harness.
2. Remove the bulbs from the rear combination lamp harness, as necessary.
3. Remove the bumper stay (hatchback only).
4. Remove the rear combination lamp seal (sedan only).

ASSEMBLY

Assembly is in the reverse order of disassembly.

INTERIOR LAMP

Map Lamp

INFOID:0000000001704466

BULB REPLACEMENT

1. Remove the map lamp lens (1).
2. Remove the bulb from lamp.
   NOTE:
   Pull bulb end from Y-shaped connector first to remove.
3. Installation is in the reverse order of removal.
   - Install the map lamp lens (1) so the round lens is positioned to the front of the vehicle as shown. There is a tab on the lens to prevent incorrect installation of the lens.

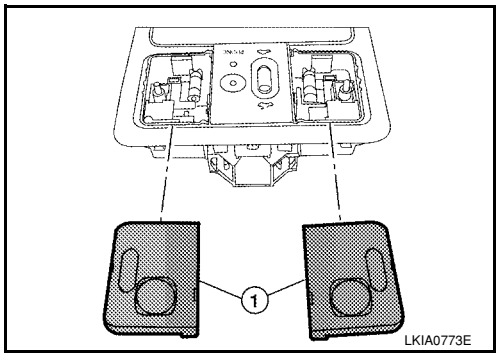

REMOVAL AND INSTALLATION

Removal

1. Insert a suitable tool and disengage the pawl (A) fittings the map lamp (1).
2. Disconnect map lamp connector and remove map lamp (1).

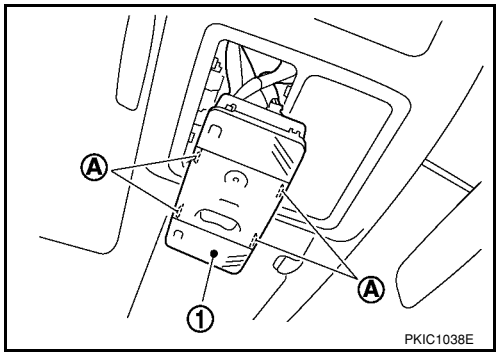

Installation

Installation is in the reverse order of removal.

DISASSEMBLY AND ASSEMBLY

Disassembly

1. Remove screw (A).
2. Remove sunroof switch (1).

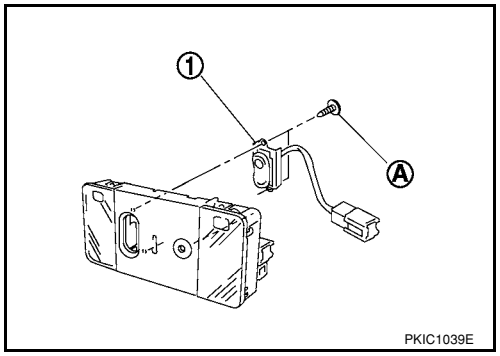

Assembly

Assembly is in the reverse order of disassembly.

Luggage Compartment Lamp

INFOID:0000000001704467

BULB REPLACEMENT

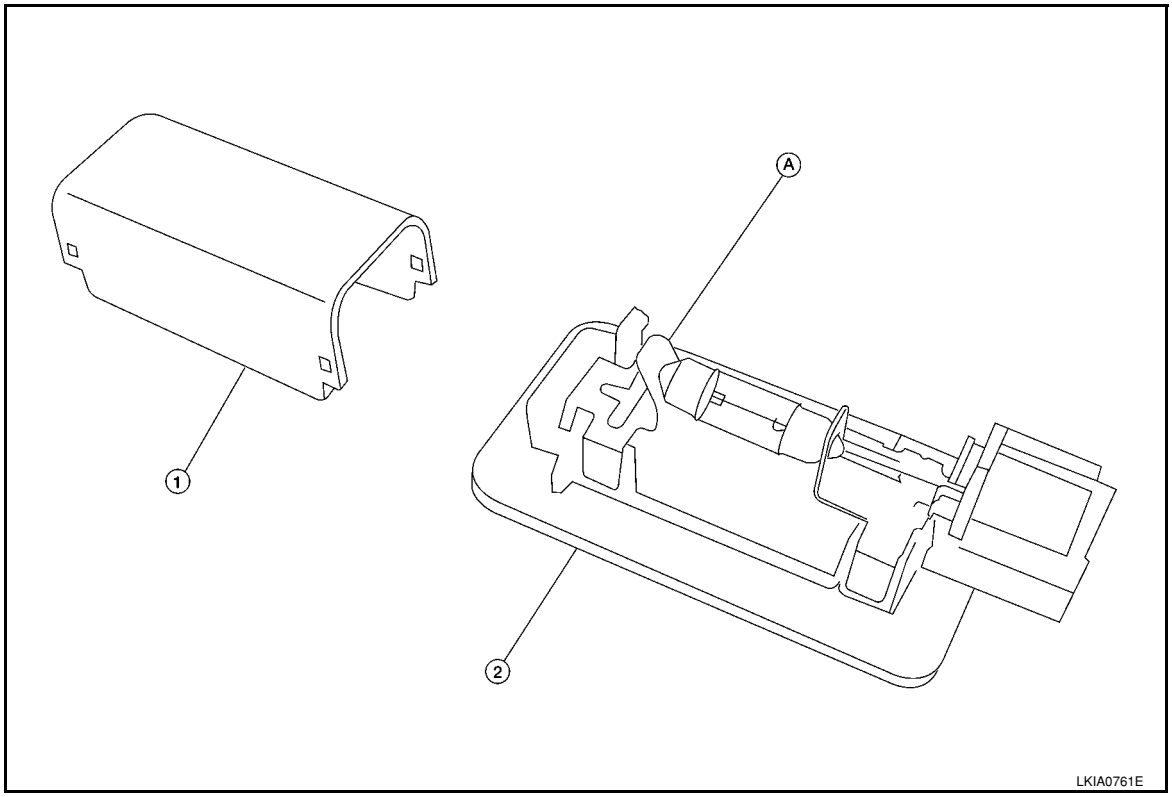

1. Luggage compartment lamp bulb cover 2. Luggage compartment lamp A. Tab A

1. Remove luggage compartment lamp cover.
2. Press tab A and remove the bulb.
3. Installation is in the reverse order of removal.

REMOVAL AND INSTALLATION

Removal

1. Remove luggage compartment lamp from the luggage side finisher LH.
2. Disconnect luggage compartment lamp connector.

Installation

Installation is in the reverse order of removal.

INTERIOR ROOM LAMP

Component Parts and Harness Connector Location

INFOID:0000000001704468

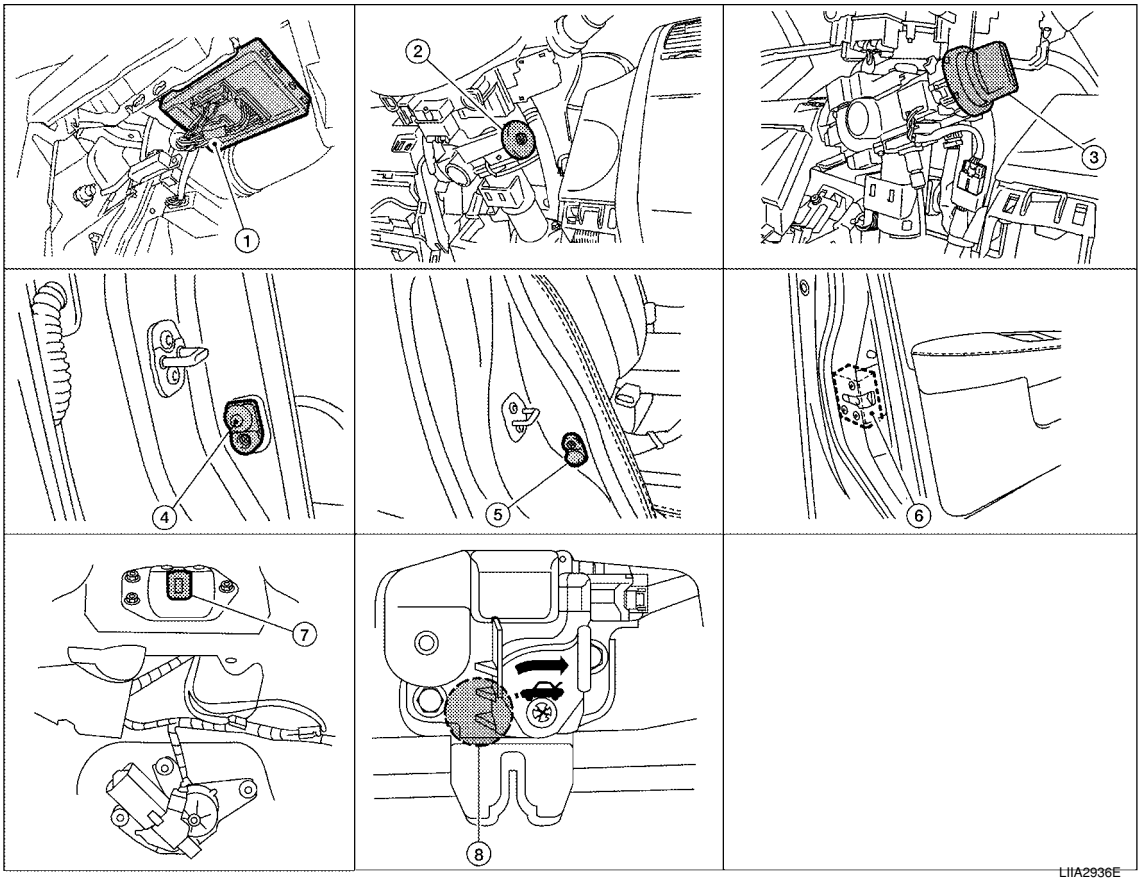

1. BCM M18, M19 and M20 (view with glove box removed)
2. Key switch and key lock solenoid (without Intelligent Key) M27
3. Key switch and ignition knob switch (with Intelligent Key) M73
4. Front door switch LH B8 and RH B108
5. Rear door switch LH B6 and RH B116
6. Front door key cylinder switch LH D14
7. Back door lock assembly D405 (hatchback)
8. Trunk lamp switch and trunk release solenoid B127 (sedan)

System Description

INFOID:0000000001704469

When room lamp switch is in DOOR position, room lamp ON/OFF is controlled by timer according to signals from switches including key switch, front door switch LH, unlock signal from keyfob, door lock and unlock switch, key cylinder lock and unlock switch, ignition switch.
When room lamp turns ON, there is a gradual brightening over 1 second.
When room lamp turns OFF, there is a gradual dimming over 1 second.
Interior room lamp timer is controlled by BCM (body control module).
Interior room lamp timer control settings can be changed with CONSULT-III.

POWER SUPPLY AND GROUND

Power is supplied at all times (without Intelligent Key system)
- through 10A fuse [No. 14, located in fuse block (J/B)]
- to key switch and key lock solenoid terminal 2,
- through 10A fuse [No. 8, located in fuse block (J/B)]
- to BCM terminal 57,
- through 40A fusible link (letter **g** , located in fuse and fusible link box)
- to BCM terminal 70.

Power is supplied at all times (with Intelligent Key system)

- through 10A fuse (No. 31, located in fuse and fusible link box)
- to key switch and ignition knob switch terminals 2 and 4,
- through 10A fuse [No. 8, located in fuse block (J/B)]
- to BCM terminal 57,
- through 40A fusible link (letter **g** , located in fuse and fusible link box)
- to BCM terminal 70.

When key is inserted in the key switch and key lock solenoid, power is supplied (without Intelligent Key system)

- through key switch and key lock solenoid terminal 1
- to BCM terminal 37.

When key is inserted in the key switch and ignition knob switch, power is supplied (with Intelligent Key system)

- through key switch and ignition knob switch terminal 1
- to BCM terminal 37.

When ignition knob switch is pushed, power is supplied (with Intelligent Key system)

- through key switch and ignition knob switch terminal 3
- to Intelligent Key unit terminal 27.

With the ignition switch in the ON or START position, power is supplied

- through 10A fuse [No. 6, located in fuse block (J/B)]
- to BCM terminal 38.

Ground is supplied

- to BCM terminal 67
- through grounds M57 and M61.

When front door LH is opened, ground is supplied

- to BCM terminal 47
- through front door switch LH terminal 2
- through case ground of front door switch LH.

When front door RH is opened, ground is supplied

- to BCM terminal 12
- through front door switch RH terminal 2
- through case ground of front door switch RH.

When rear door LH is opened, ground is supplied

- to BCM terminal 48
- through rear door switch LH terminal 1
- through case ground of rear door switch LH.

When rear door RH is opened, ground is supplied

- to BCM terminal 13
- through rear door switch RH terminal 1
- through case ground of rear door switch RH.

When back door (hatchback) is opened, ground is supplied

- to BCM terminal 43
- through back door lock assembly (back door switch) terminal 3
- through back door lock assembly (back door switch) terminal 4
- through grounds B117, B132 and D402.

When trunk lid (sedan) is opened, ground is supplied

- to BCM terminal 42
- through trunk lamp switch and trunk release solenoid terminal 3
- through trunk lamp switch and trunk release solenoid terminal 1
- through grounds B117 and B132.

When front door LH is unlocked by front door key cylinder switch LH, the BCM receives a ground signal

- to BCM terminal 7
- through front door key cylinder switch LH terminal 3
- through front door key cylinder switch LH terminal 2
- through grounds M57 and M61.

When a signal, or combination of signals is received by BCM, ground is supplied

- to room lamp terminal 2
- through map lamp terminals 5 and 2 (with map lamp)
- through BCM terminal 63.

With power and ground supplied, the interior room lamp illuminates.

SWITCH OPERATION

When map lamp switch is ON (with map lamp), ground is supplied

- through grounds M57 and M61.

• to map lamp terminal 1
Power is supplied
• through BCM terminal 56
• to map lamp terminal 4.
When interior room lamp switch is ON, ground is supplied
• to interior room lamp terminal 1
• through map lamp (with map lamp) terminal 7
• through map lamp (with map lamp) terminal 1
• through grounds M57 and M61.
Power is supplied
• through BCM terminal 56
• through map lamp (with map lamp) terminal 4
• through map lamp (with map lamp) terminal 6
• to room lamp terminal 3.

INTERIOR ROOM LAMP TIMER OPERATION

Without Intelligent Key System

When room lamp switch is in DOOR position, and when all conditions below are met, BCM performs timer control (maximum 30 seconds) for room lamp ON/OFF.
In addition, when the interior room lamp turns ON or OFF there is gradual brightening or dimming over 1 second.
Power is supplied
• through 10A fuse [No. 14, located in fuse block (J/B)]
• to key switch and key lock solenoid terminal 2.
When the key is removed from ignition key cylinder (key switch OFF), power will not be supplied to BCM terminal 37.
When front door key cylinder switch LH is unlocked, ground is supplied
• to BCM terminal 7
• through front door key cylinder switch LH terminal 3
• through front door key cylinder switch LH terminal 2
• through grounds M57 and M61.
At the time that front door LH is opened, BCM detects that front door LH is unlocked. It determines that interior room lamp timer operation condition is met, and turns the room lamp ON for 30 seconds.
When key is in ignition key cylinder (key switch ON),
Power is supplied
• through key switch and key lock solenoid terminal 1
• to BCM terminal 37.
When key is removed from key switch and key lock solenoid (key switch OFF), the power supply to BCM terminal 37 is terminated. BCM detects that key has been removed, determines that interior room lamp timer conditions are met, and turns the room lamp ON for 30 seconds.
When front door LH opens → closes, and the key is not inserted in the key switch and key lock solenoid (key switch OFF), voltage at BCM terminal 47 changes between 0V (door open) → 12V (door closed). The BCM determines that conditions for room lamp operation are met and turns the room lamp ON for 30 seconds.
Interior room lamp timer control is canceled under the following conditions:
• Front door LH is locked (locked front door key cylinder switch LH).
• Front door LH is opened (front door switch LH).
• Ignition switch ON.

With Intelligent Key System

When the room lamp switch is in DOOR position, and when all conditions below are met, BCM performs timer control (maximum 30 second) for room lamp ON/OFF.
In addition, when interior room lamp turns ON or OFF there is gradual brightening or dimming over 1 second.
Power is supplied
• through 10A fuse (No. 31, located in fuse and fusible link box)
• to key switch and ignition knob switch terminals 2 and 4.
When key is removed from ignition key cylinder (key switch OFF), power will not be supplied to BCM terminal 37.
When the ignition knob switch is released, power will not be supplied to Intelligent Key unit terminal 27.
When front door key cylinder switch LH is unlocked, ground is supplied
• to BCM terminal 7
• through front door key cylinder switch LH terminal 3

- through front door key cylinder switch LH terminal 2
- through grounds M57 and M61.

At the time the front door LH is opened, the BCM detects the front door LH is unlocked. It determines that the interior room lamp timer operation conditions are met, and interior room lamp ON for 30 seconds.
When the key is in ignition key cylinder (key switch ON), or ignition knob switch is pushed, power is supplied

- through key switch and ignition knob switch terminal 1
- to BCM terminal 37, or
- through key switch and ignition knob switch terminal 3
- to Intelligent Key unit terminal 27.

When the key is removed from key switch (key switch OFF), power supply to BCM terminal 37 is terminated. When the ignition knob switch is released, power supply to intelligent key unit is terminated. The BCM detects that the key has been removed, determines that interior room lamp timer conditions are met, and turns room lamp ON for 30 seconds.
When the front door LH opens → closes, and key is not inserted in key switch (or ignition knob switch is released), BCM terminal 47 changes between 0V (door open) → 12V (door closed). BCM determines that conditions for room lamp operation are met, and turns room lamp ON for 30 seconds.
Interior room lamp timer control is canceled under the following conditions:

- Front door LH is locked (with keyfob or front door key cylinder switch LH).
- Front door LH is opened (front door switch LH).
- Ignition switch ON.

INTERIOR LAMP BATTERY SAVER CONTROL

If an interior room lamp is left ON, it will not be turned OFF even when door is closed.
BCM turns off interior lamp automatically to save battery 30 minutes after ignition switch is turned off.
After lamps are turned OFF by the battery saver system, the lamps illuminate again when

- front door key cylinder switch LH is locked or unlocked
- door is opened or closed
- key is removed from ignition key cylinder or inserted in ignition key cylinder, or the ignition knob switch is pushed or released.

Interior lamp battery saver control time period can be changed by the function setting of CONSULT-III.

Schematic

INFOID:0000000001704470

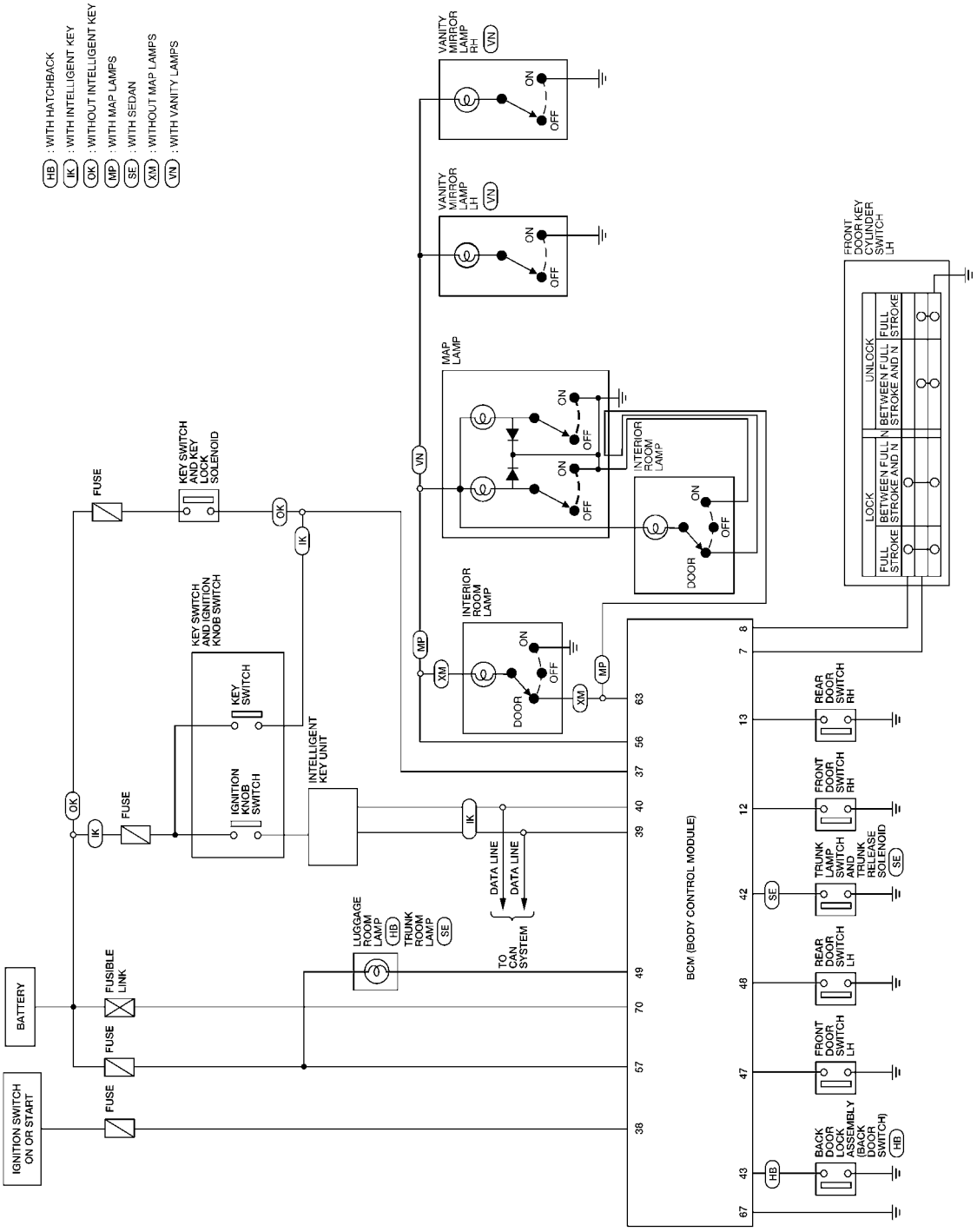

Wiring Diagram - INT/L -

INFOID:0000000001704471

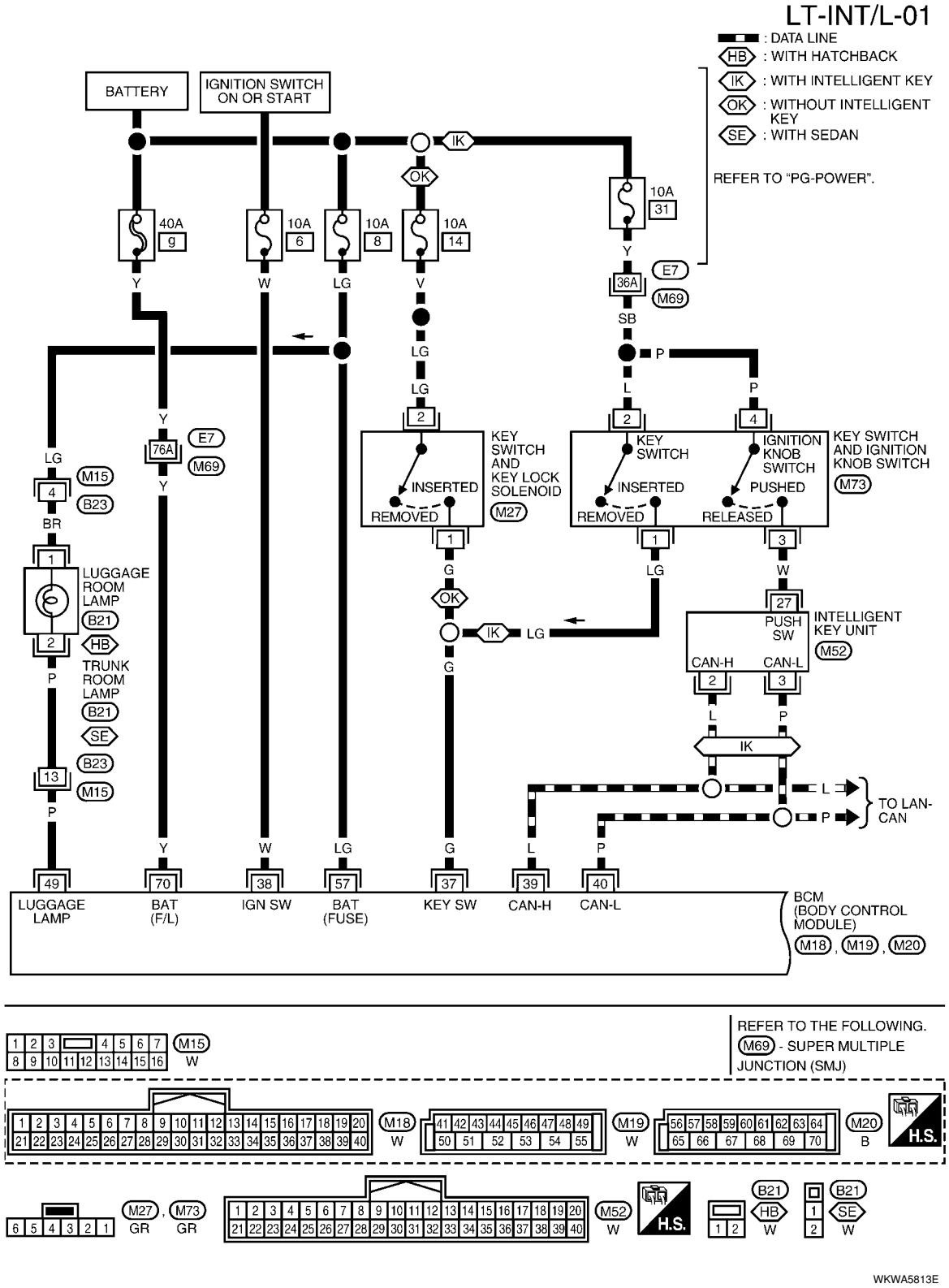

LT-INTL/L-02

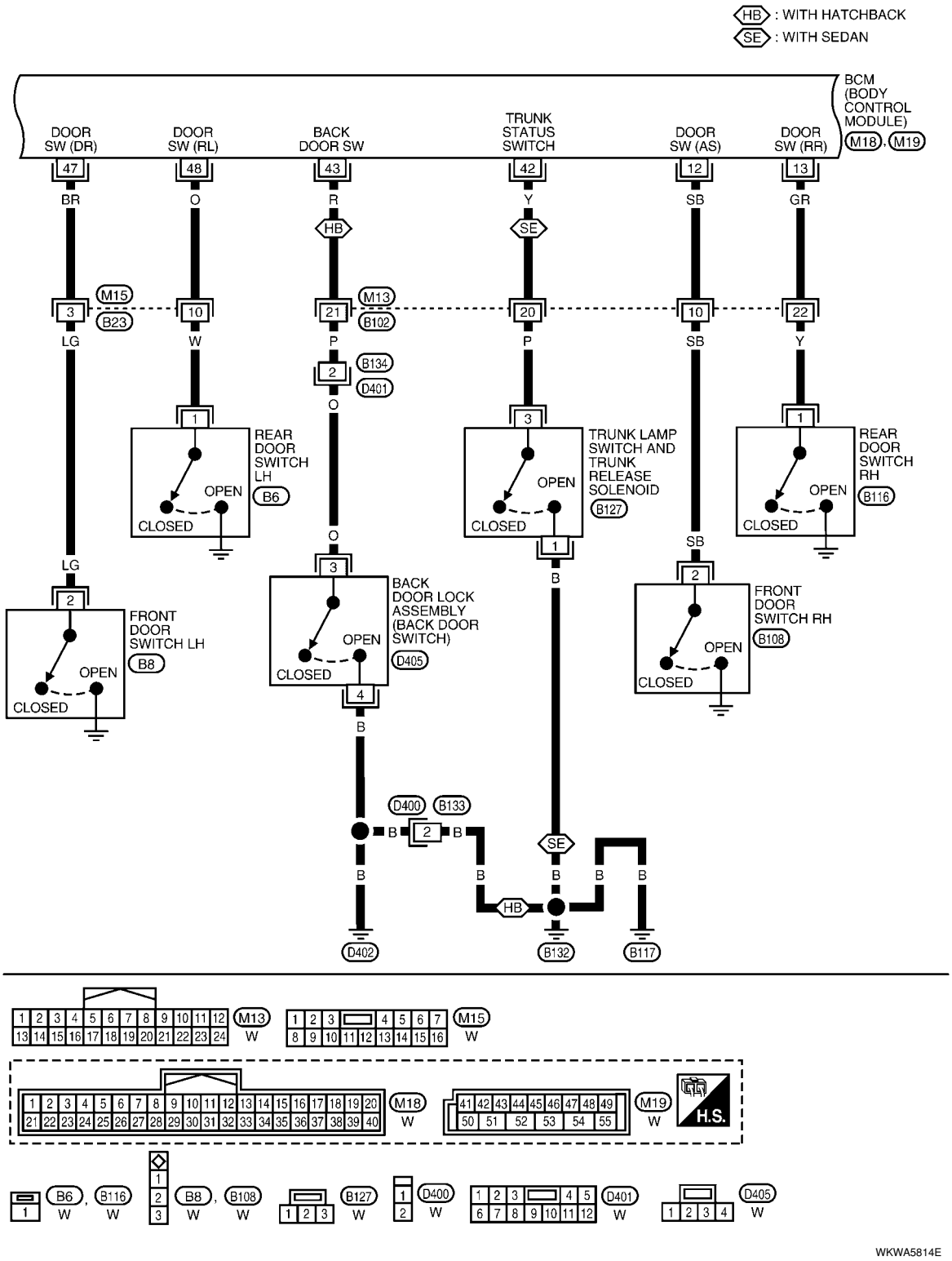
HB : WITH HATCHBACK
SE : WITH SEDAN
BCM (BODY CONTROL MODULE)
M18, M19
DOOR SW (DR)
DOOR SW (RL)
BACK DOOR SW
TRUNK STATUS SWITCH
DOOR SW (AS)
DOOR SW (RR)
47
48
43
42
12
13
BR
O
R
Y
SB
GR
M15
B23
M13
B102
B134
D401
LG
W
P
P
SB
Y
REAR DOOR SWITCH LH
B6
TRUNK LAMP SWITCH AND TRUNK RELEASE SOLENOID
B127
REAR DOOR SWITCH RH
B116
OPEN
CLOSED
FRONT DOOR SWITCH LH
B8
BACK DOOR LOCK ASSEMBLY (BACK DOOR SWITCH)
D405
FRONT DOOR SWITCH RH
B108
D400
B133
D402
B132
B117
M13
W
M15
W
M18
W
M19
W
H.S.
B6
B116
B8
B108
B127
D400
D401
D405
WKWA5814E

LT-INT/L-03

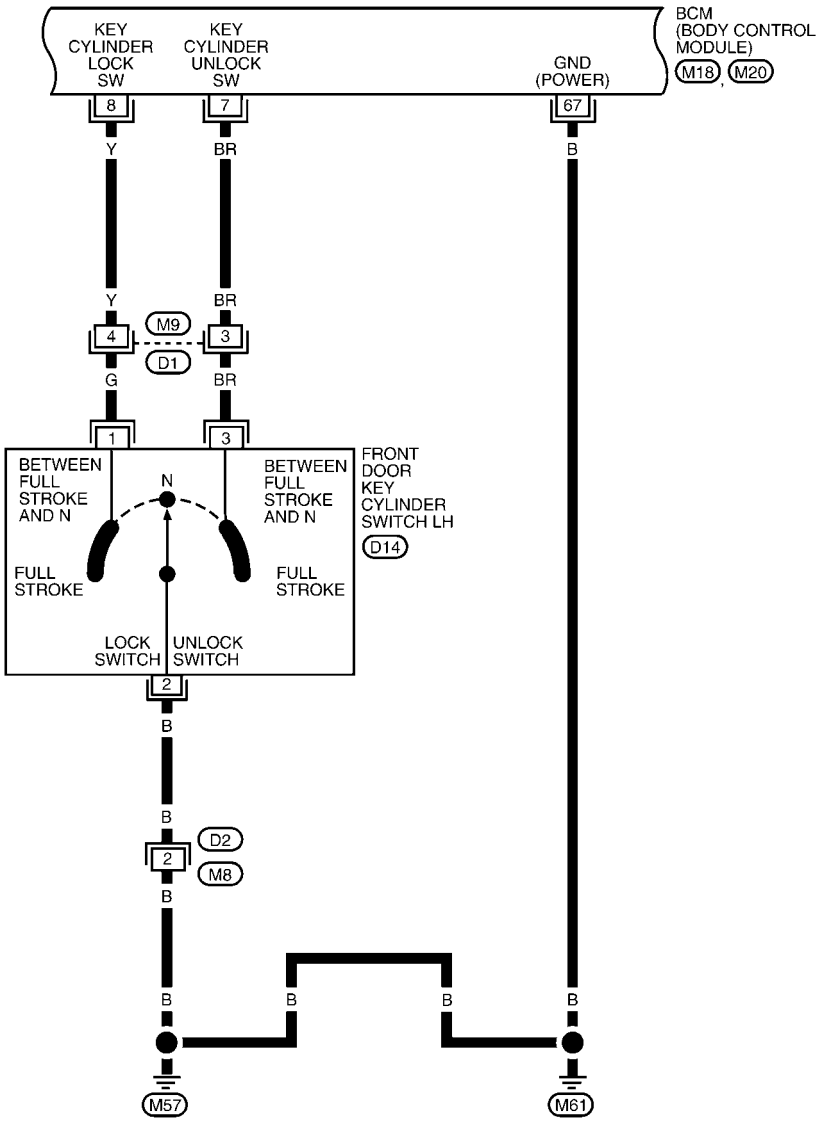

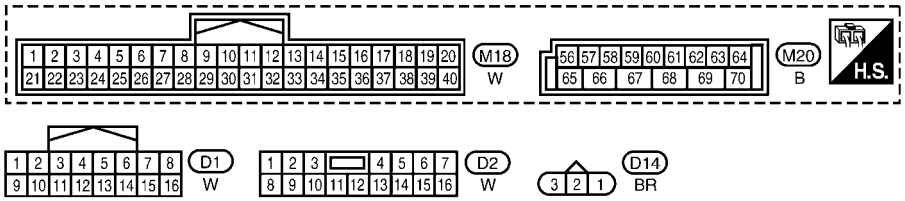

LKWA0341E

LT-INT/L-04

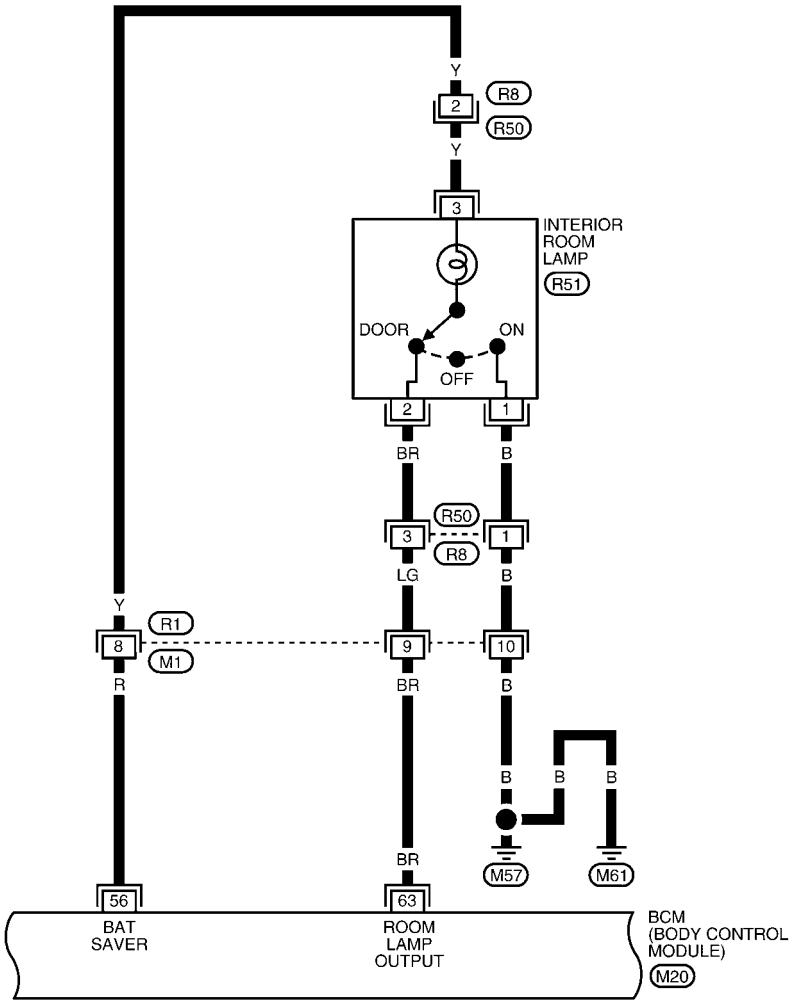

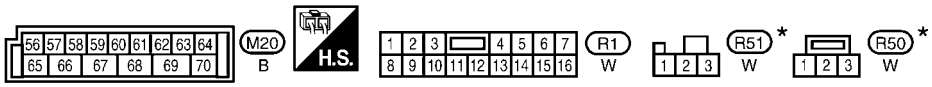

*: THIS CONNECTOR IS NOT SHOWN IN "HARNESS LAYOUT" OF PG SECTION.

LKWA0342E

LT-INT/L-05

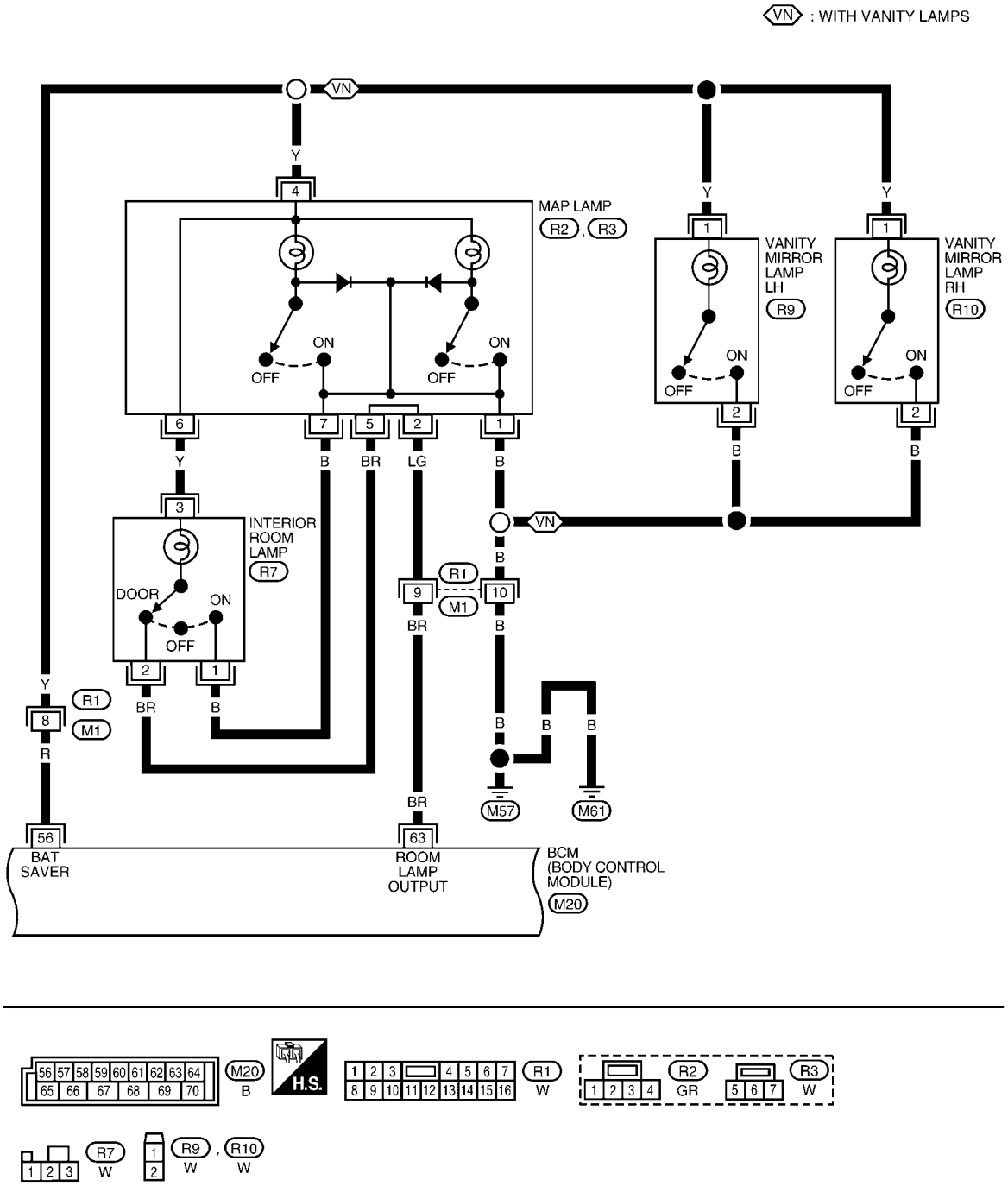

LKWA0343E

Terminal and Reference Value for BCM

INFOID:0000000001704472

Refer to BCS-11, "Terminal and Reference Value for BCM" .

How to Proceed with Trouble Diagnosis

INFOID:0000000001704473

1. Confirm the symptom or customer complaint.
2. Understand operation description and function description. Refer to LT-89, "System Description" .

3. Perform the preliminary check. Refer to LT-99, "Preliminary Check" .
4. Check symptom and repair or replace the cause of the malfunction.
5. Does the interior room lamp operate normally? If YES, GO TO 6. If NO, GO TO 4.
6. Inspection End

Preliminary Check

INFOID:0000000001704474

CHECK POWER SUPPLY AND GROUND CIRCUIT FOR BCM

Refer to BCS-15, "BCM Power Supply and Ground Circuit Inspection" .

CHECK POWER SUPPLY AND GROUND CIRCUIT FOR IPDM E/R

Refer to LT-11, "Preliminary Check" .

CONSULT-III Function (BCM)

INFOID:0000000001704475

Refer to LT-11, "CONSULT-III Function (BCM)".

WORK SUPPORT

Display Item List

Item	Description	CONSULT-III
SET I/L D–UNLCK INTCON	The 30 second operating function of the interior room lamps can be selected when the front door LH is released (unlocked).	ON/OFF
ROOM LAMP ON TIME SET	The time in order to escalate illumination can be adjusted when interior room lamps are turned on.	MODE 1 – 7
ROOM LAMP OFF TIME SET	The time in order to diminish illumination can be adjusted when interior room lamps are turned off.	MODE 1 – 7

Reference between “MODE” and “TIME” for “TURN ON/OFF”

MODE	1	2	3	4	5	6	7
Time (sec.)	0.5	1	2	3	4	5	0

DATA MONITOR

Display Item List

Monitor item		Contents
IGN ON SW	“ON/OFF”	Displays “IGN position (ON)/OFF, ACC position (OFF)” judged from ignition switch signal.
KEY ON SW	“ON/OFF”	Displays “Key inserted (ON)/key removed (OFF)” status judged from key switch signal.
DOOR SW - DR	“ON/OFF”	Displays status of front door LH as judged from front door switch LH signal. (Door is open: ON/Door is closed: OFF)
DOOR SW - AS	“ON/OFF”	Displays “Door open (ON)/Door closed (OFF)” status, determined from front door switch RH signal.
DOOR SW - RR	“ON/OFF”	Displays “Door open (ON)/Door closed (OFF)” status, determined from rear door switch RH signal.
DOOR SW - RL	“ON/OFF”	Displays “Door open (ON)/Door closed (OFF) ” status, determined from rear door switch LH signal.
TRUNK	“ON/OFF”	Displays "Back door/Trunk open (ON)/closed (OFF)" status, determined from the back door switch (hatchback) or the trunk lamp switch (sedan).
LOCK STATUS	“ON/OFF”	Display status (door is locked: ON/door is unlocked: OFF) of front door lock actuator LH (unlock sensor) judged from the front door lock actuator LH (unlock sensor) signal.
CDL LOCK SW	“ON/OFF”	Displays “Door locked (ON)/Door unlocked (OFF) status, determined from locking detection switch in the front door LH.
CDL UNLOCK SW	“ON/OFF”	Displays “Door unlocked (OFF)” status, determined from locking detection switch in front door RH.

Monitor item		Contents
I– KEY LOCK[NOTE]	“ON/OFF”	Displays “Locked (ON)/Other (OFF)” status, determined from lock signal.
I– KEY UNLOCK[NOTE]	“ON/OFF”	Displays “Unlocked (ON)/Other (OFF)” status, determined from unlock signal.

NOTE:
Vehicles without intelligent key system display this item, but cannot be monitored.

ACTIVE TEST

Display Item List

Test item	Description
INT LAMP	Interior room lamp can be operated by any ON-OFF operations.

WORK SUPPORT

Display Item List

Item	Description	CONSULT-III
ROOM LAMP TIMER SET	Interior room lamp battery saver timer setting can be changed.	MODE 1: 30 min. MODE 2: 60 min.
ROOM LAMP BAT SAV SET	Interior room lamp battery saver control mode can be changed in this mode. Select interior room lamp battery saver control mode between ON and OFF.	ON/OFF

Interior Room Lamp Control Does Not Operate (With Map Lamp)

INFOID:0000000001704476

1.CHECK EACH SWITCH

Select "BCM" on CONSULT-III. With "INT LAMP" data monitor, make sure switches listed in display item list turn ON-OFF linked with switch operation. Refer to LT-99, "CONSULT-III Function (BCM)" for switches and their functions.

OK or NG

OK >> GO TO 2.
NG >> Inspect malfunctioning switch system.

2.ACTIVE TEST

1. Select “BCM” on CONSULT-III. Select “INT LAMP" active test.
2. When room lamp switch is in DOOR position, make sure room lamp operates.

Room lamp should operate.

OK or NG

OK >> Replace BCM. Refer to BCS-18, "Removal and Installation of BCM" .
NG >> GO TO 3.

3.CHECK ROOM LAMP INPUT VOLTAGE

1. Turn ignition switch OFF.
2. Check voltage between interior room lamp harness connector R7 terminal 3 and ground.

3 - Ground : Battery voltage.

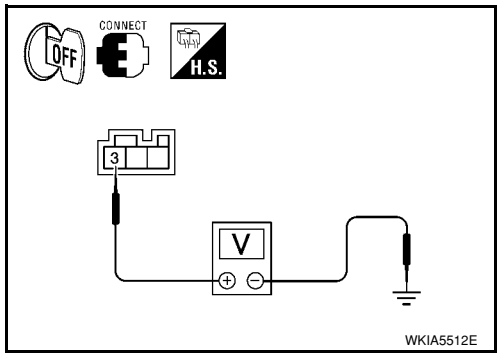

OK or NG

OK >> GO TO 6.
NG >> GO TO 4.

4.CHECK MAP LAMP INPUT CIRCUIT

1. Map lamp switch is in OFF position.
2. Check voltage between map lamp harness connector R2 terminal 4 and ground.

4 - Ground : Battery voltage.

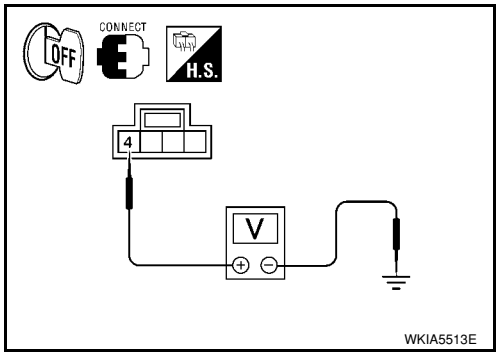

OK or NG

OK >> GO TO 5.
NG >> Repair harness or connector.

5. CHECK ROOM LAMP INPUT CIRCUIT

1. Disconnect map lamp connector and interior room lamp connector.
2. Check continuity between map lamp harness connector R3 (A) terminal 6 and interior room lamp harness connector R7 (B) terminal 3.

6 - 3 : Continuity should exist.

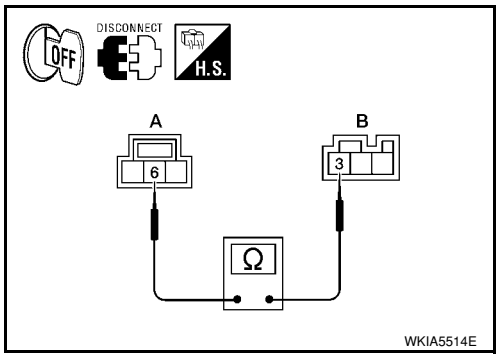

OK or NG

OK >> Replace map lamp.
NG >> Repair harness or connector.

6. CHECK ROOM LAMP

1. Disconnect interior room lamp connector.
2. Check continuity between interior room lamp terminals.

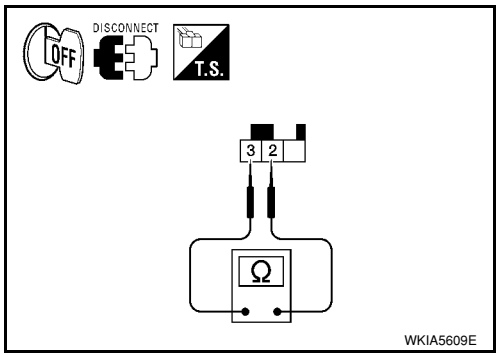

Terminal		Condition	Continuity
Interior room lamp			
2	3	Room lamp switch is in DOOR position	Yes
		Room lamp switch is in OFF position	No

OK or NG

OK >> GO TO 7.
NG >> Check bulb. If OK, replace interior room lamp.

7. CHECK MAP LAMP

1. Disconnect map lamp connectors.
2. Check continuity between map lamp terminals.

2 - 5 : Continuity should exist.

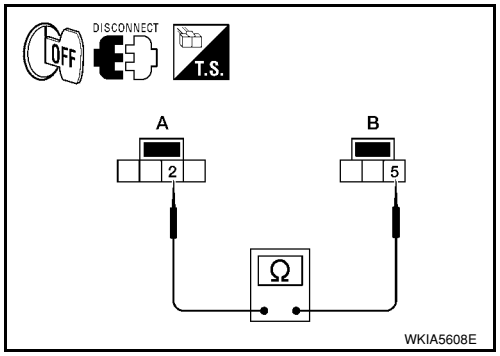

OK or NG

OK >> GO TO 8.
NG >> Replace map lamp.

8. CHECK CIRCUIT BETWEEN ROOM LAMP AND MAP LAMP

Check continuity between interior room lamp harness connector R7 (A) terminal 2 and map lamp harness connector R3 (B) terminal 5.

2 - 5 : Continuity should exist.

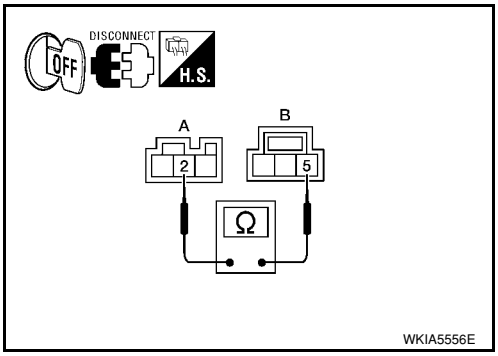

OK or NG

OK >> GO TO 9.
NG >> Repair harness or connector.

9. CHECK CIRCUIT BETWEEN MAP LAMP AND BCM

1. Disconnect BCM connector.
2. Check continuity between BCM harness connector M20 (A) terminal 63 and map lamp harness connector R2 (B) terminal 2.

63 - 2 : Continuity should exist.

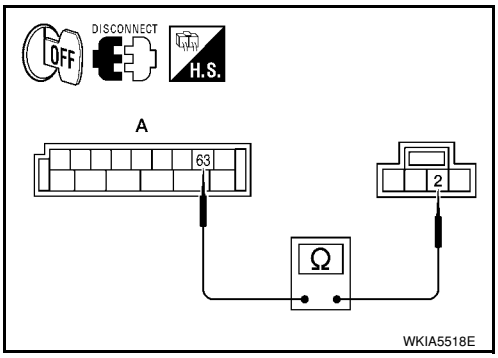

OK or NG

OK >> Replace BCM if room lamp does not work after setting the connector again. Refer to BCS-18, "Removal and Installation of BCM" .
NG >> Repair harness or connector.

Interior Room Lamp Control Does Not Operate (Without Map Lamp)

INFOID:0000000001704477

1. CHECK EACH SWITCH

Select "BCM" on CONSULT-III. With "INT LAMP" data monitor, make sure switches listed in display item list turn ON-OFF linked with switch operation. Refer to LT-99, "CONSULT-III Function (BCM)" for switches and their functions.

OK or NG

OK >> GO TO 2.
NG >> Inspect malfunctioning switch system.

2. ACTIVE TEST

1. Select "BCM" on CONSULT-III. Select "INT LAMP" active test.
2. When room lamp switch is in DOOR position, make sure room lamp operates.

Room lamp should operate.

OK or NG

OK >> Replace BCM. Refer to BCS-18, "Removal and Installation of BCM" .
NG >> GO TO 3.

3. CHECK ROOM LAMP INPUT VOLTAGE

1. Turn ignition switch OFF.
2. Check voltage between interior room lamp harness connector R7 terminal 3 and ground.

3 - Ground : Battery voltage should exist.

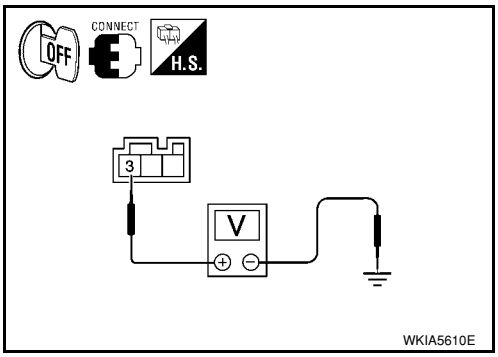

OK or NG

OK >> GO TO 4.
NG >> GO TO 6.

4. CHECK ROOM LAMP

1. Disconnect room lamp connector.
2. Check continuity between room lamp terminals.

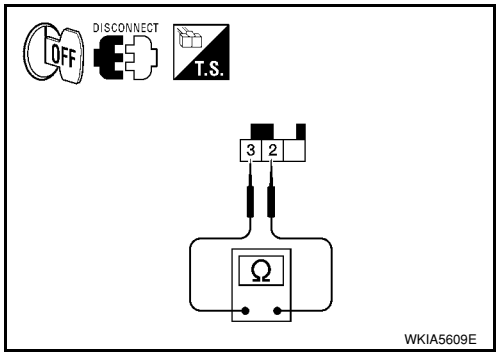

Room lamp Terminal		Condition	Continuity
2	3	Room lamp switch is in DOOR position	Yes
		Room lamp switch is in OFF position	No

OK or NG

OK >> GO TO 5.
NG >> Check bulb. If OK, replace room lamp. Refer to LT-103, "Bulb Replacement" .

5. CHECK ROOM LAMP CIRCUIT

1. Disconnect BCM connector.
2. Check continuity between BCM harness connector M20 (A) terminal 56 and room lamp harness connector R7 (B) terminal 3.

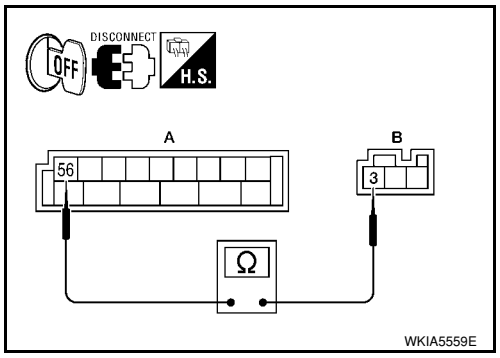

56 - 3 : Continuity should exist.

OK or NG

OK >> GO TO 6.
NG >> Repair harness or connector.

6. CHECK ROOM LAMP CIRCUIT

1. Disconnect BCM connector and room lamp connector.
2. Check continuity between BCM harness connector M20 (A) terminal 63 and room lamp harness connector R7 (B) terminal 2.

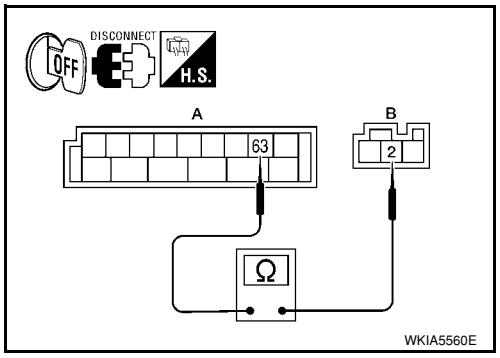

63 - 2 : Continuity should exist.

OK or NG

OK >> Replace BCM if interior lamp does not work after setting the connector again. Refer to BCS-18, "Removal and Installation of BCM" .
NG >> Repair harness or connector.

Bulb Replacement

INFOID:0000000001704478

ROOM LAMP

1. Remove lens (1) by inserting suitable tool and releasing LH (switch side first).
2. Remove bulb (2).
3. Installation is in the reverse order of removal.
   NOTE:
   Insert the lens hook end RH side first to install lens.

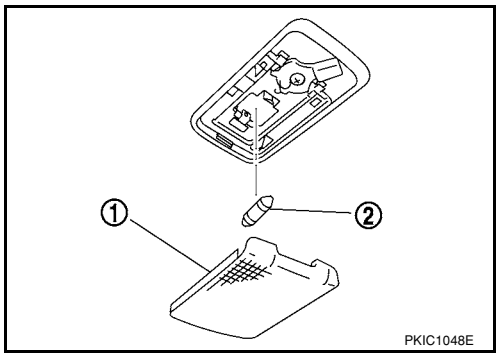

Removal and Installation

INFOID:0000000001704479

ROOM LAMP

Removal

1. Remove lens (1) and remove the room lamp by pulling down to release the room lamp metal clips (A).
2. Disconnect connector and remove room lamp.

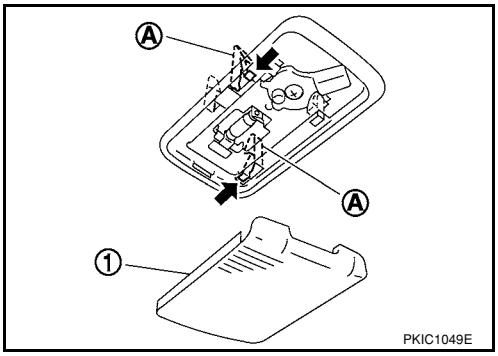

Installation

Installation is in the reverse order of removal.

ILLUMINATION

System Description

INFOID:0000000001704480

The control of the illumination lamps operation is dependent upon the position of the lighting switch. When the lighting switch is placed in the 1ST or 2ND position, the BCM (body control module) receives input signal requesting the illumination lamps to illuminate. This input signal is communicated to IPDM E/R (intelligent power distribution module engine room) across CAN communication lines. CPU (central processing unit) located in the IPDM E/R controls the tail lamp relay coil. This relay, when energized, directs power to the illumination lamps, which then illuminate.

Power is supplied at all times
- to ignition relay, located in IPDM E/R,
- to tail lamp relay, located in IPDM E/R,
- through 15A fuse (No. 52, located in IPDM E/R) and
- through 20A fuse (No. 53, located in IPDM E/R)
- to CPU located in IPDM E/R,
- through 40A fusible link (letter **g** , located in fuse and fusible link box)
- to BCM terminal 70, and
- through 10A fuse [No. 8, located in fuse block (J/B)]
- to BCM terminal 57.

With the ignition switch in the ON or START position, power is supplied
- to ignition relay, located in IPDM E/R, and
- through 10A fuse [No. 6, located in fuse block (J/B)]
- to BCM terminal 38.

With the ignition switch in the ACC or ON position, power is supplied
- through 10A fuse [No. 20, located in fuse block (J/B)]
- to BCM terminal 11.

Ground is supplied
- to BCM terminal 67
- through grounds M57 and M61, and
- to IPDM E/R terminals 39 and 59
- through grounds E15 and E24.

ILLUMINATION OPERATION BY LIGHTING SWITCH

With the lighting switch in the 1ST or 2ND position, BCM receives input signal requesting the illumination lamps to illuminate. This input signal is communicated to IPDM E/R across CAN communication lines. CPU located in the IPDM E/R controls the tail lamp relay coil, which, when energized, directs power
- through 10A fuse (No. 37, located in IPDM E/R)
- through IPDM E/R terminal 29
- to microphone terminal 3 (with Bluetooth)
- to illumination control switch terminal 1
- to glove box lamp terminal 1 (with glovebox lamp)
- to audio unit terminal 9
- to front air control terminal 5
- to A/T device terminal 3 (with 4-speed A/T)
- to CVT device terminal 3 (with CVT)
- to hazard switch terminal 3
- to combination meter terminal 12
- to door mirror remote control switch terminal 16, and

Ground is supplied
- to microphone terminal 2 (with Bluetooth)
- to glove box lamp terminal 2 (with glove box lamp), and
- to illumination control switch terminal 3
- through grounds M57 and M61.

The illumination control switch controls illumination intensity by varying the ground to the following
- through illumination control switch terminal 2
- to audio unit terminal 8
- to front air control terminal 6
- to A/T device terminal 4 (with 4-speed A/T)
- to CVT device terminal 3 (with CVT)
- to hazard switch terminal 4

- to combination meter terminal 13,
- to door mirror remote control switch terminal 15,

With power and ground supplied, illumination lamps illuminate.

EXTERIOR LAMP BATTERY SAVER CONTROL

Refer to LT-72, "System Description" .

CAN Communication System Description

INFOID:0000000001704481

Refer to LAN-6, "System Description" .

Schematic

INFOID:0000000001704482

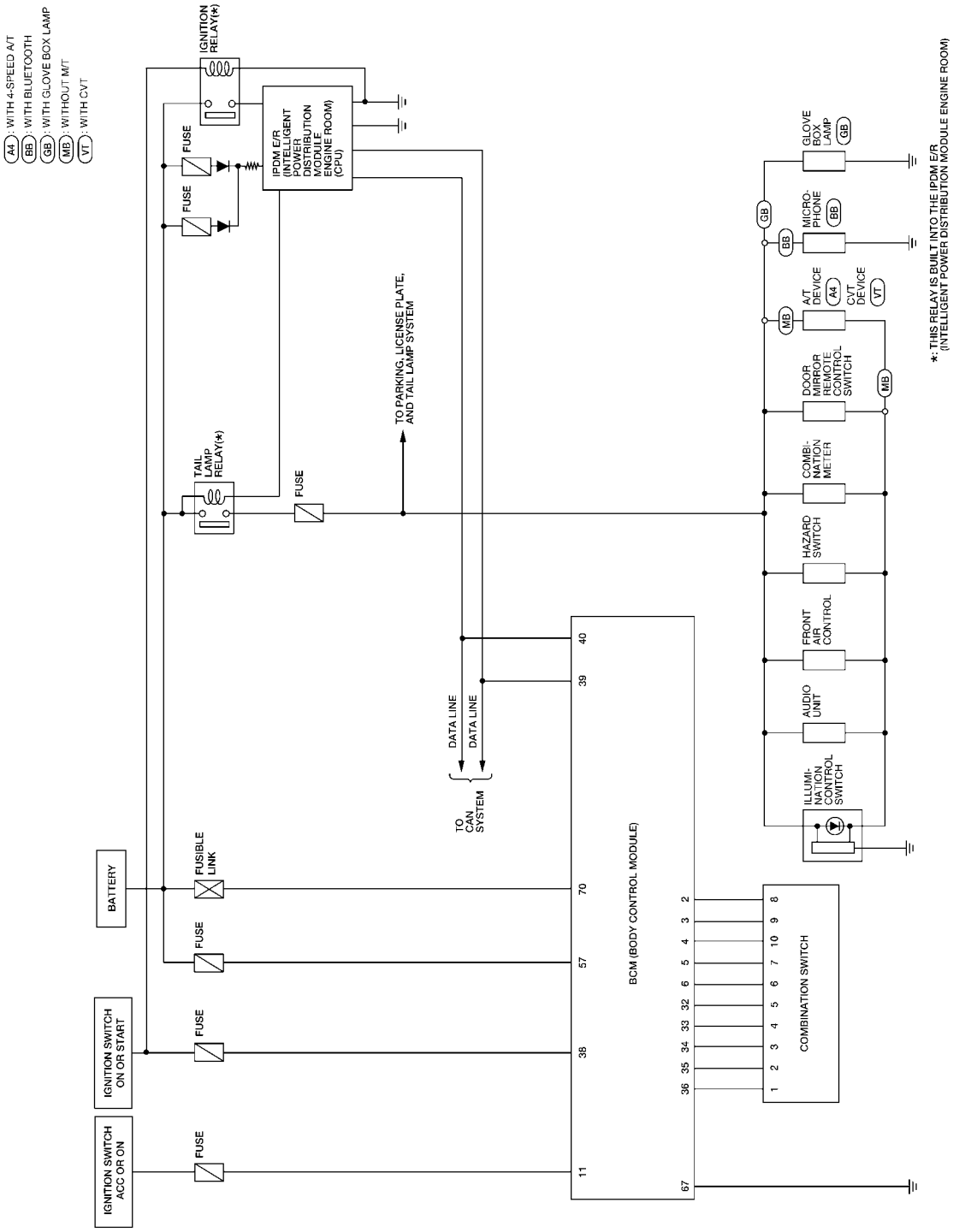

ALLWA0129GB

Wiring Diagram - ILL -

INFOID:0000000001704483

LT-ILL-01

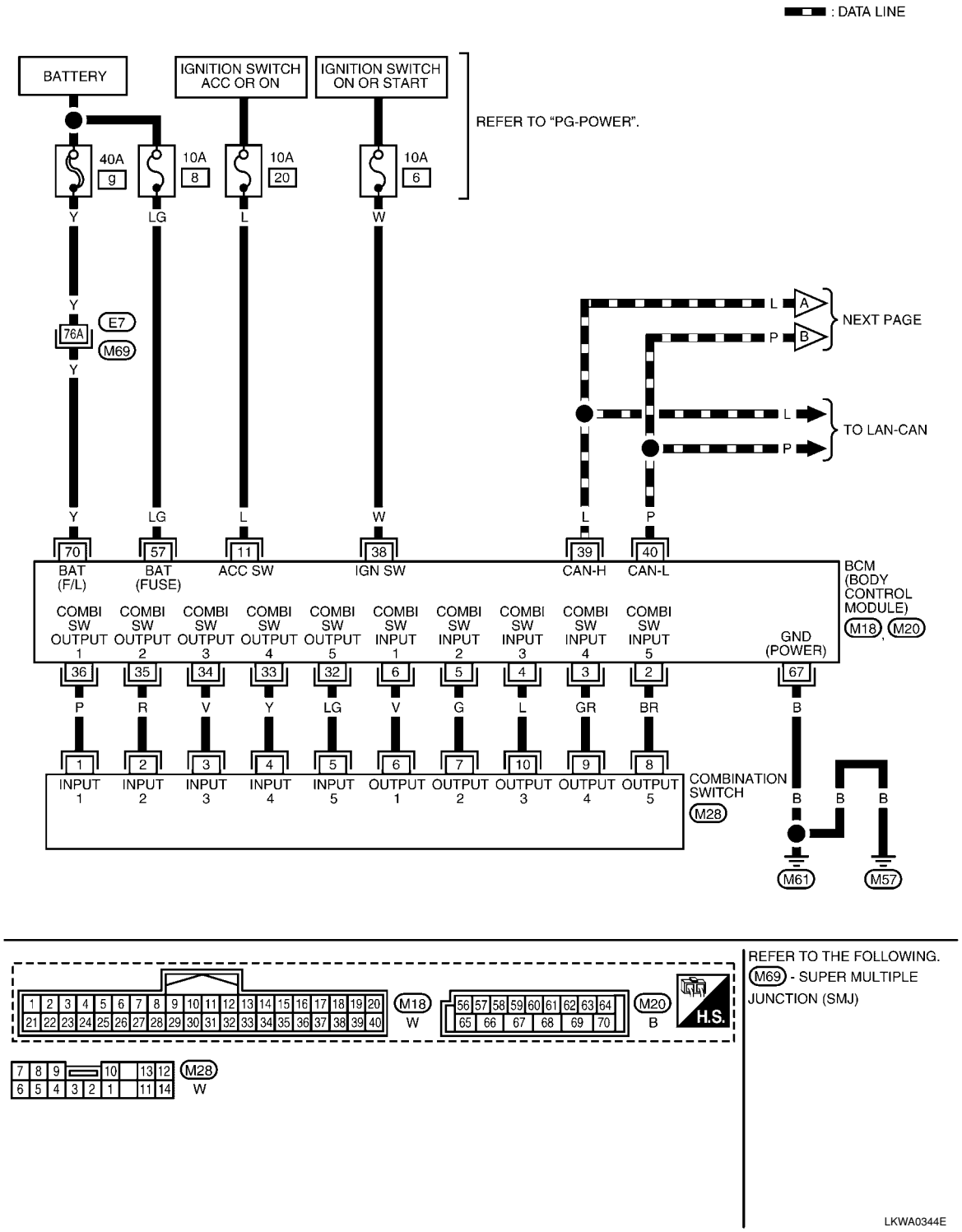

LT-ILL-02

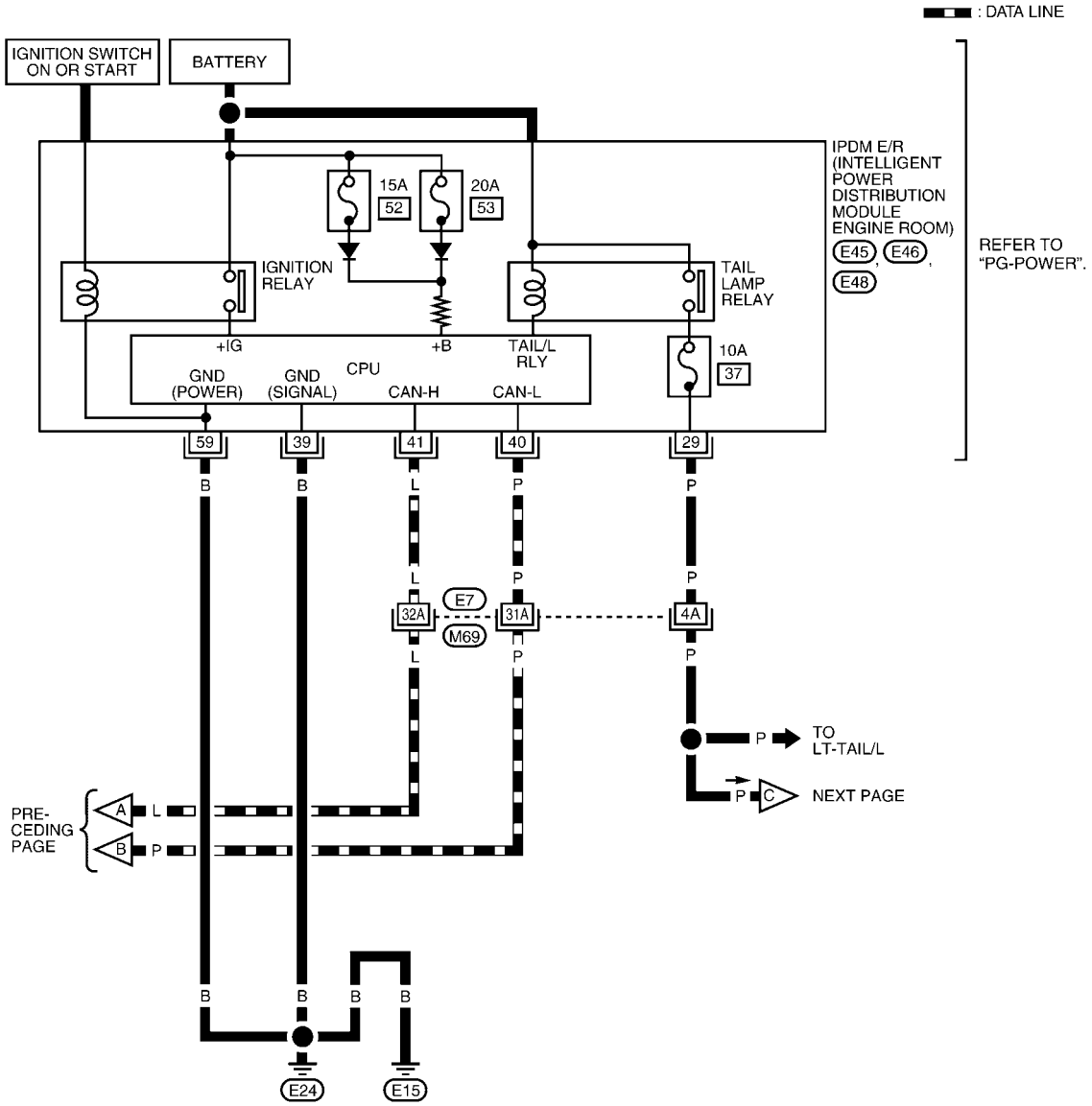

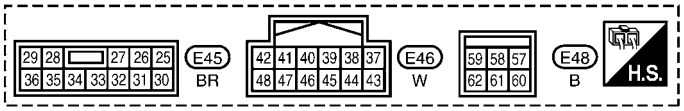

REFER TO THE FOLLOWING.
M69 - SUPER MULTIPLE JUNCTION (SMJ)

LKWA0345E

LT-ILL-03

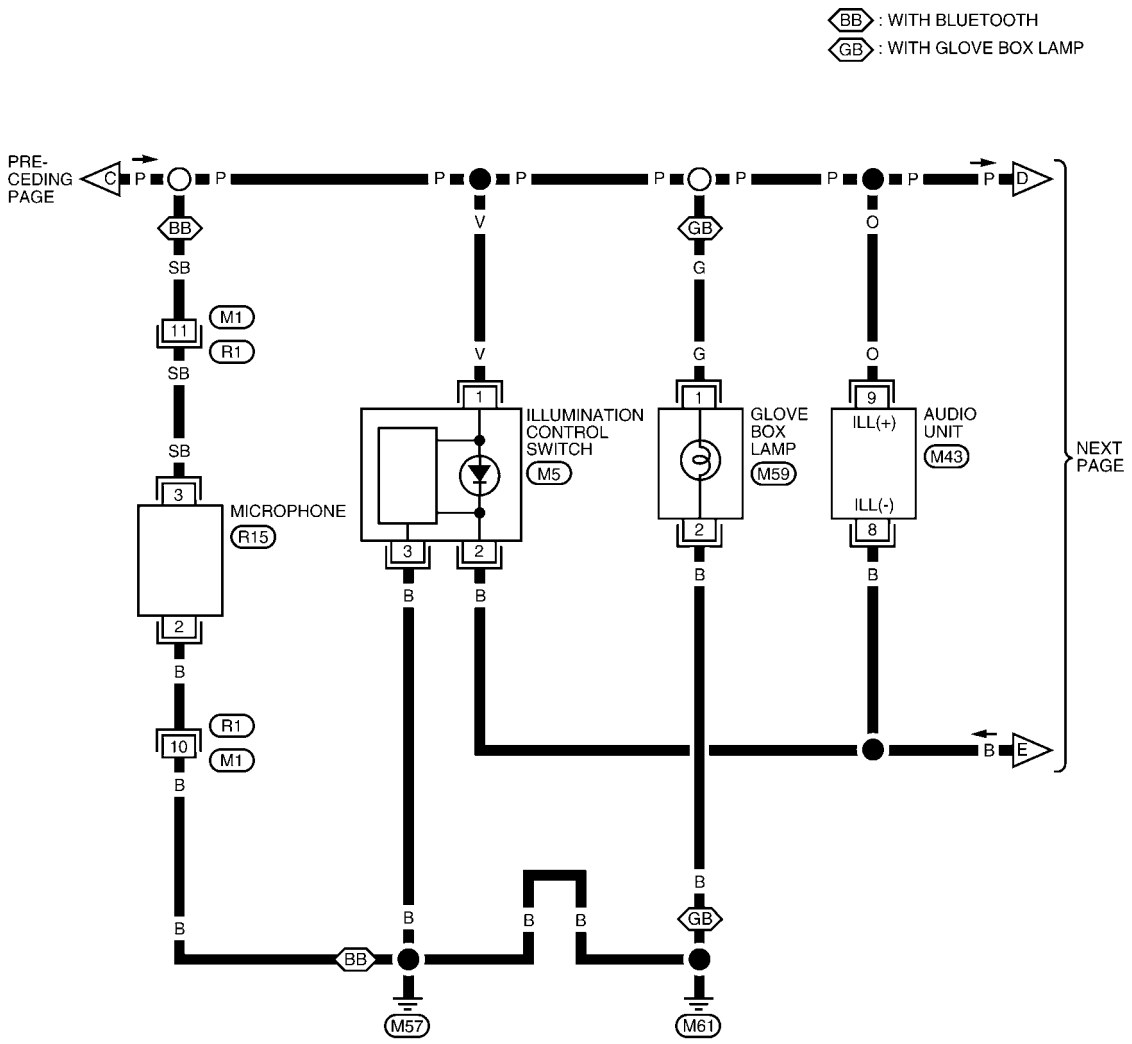

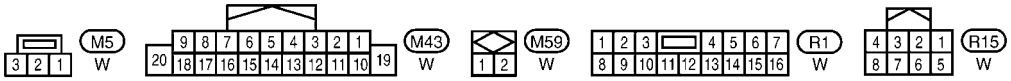

LKWA0346E

LT-ILL-04

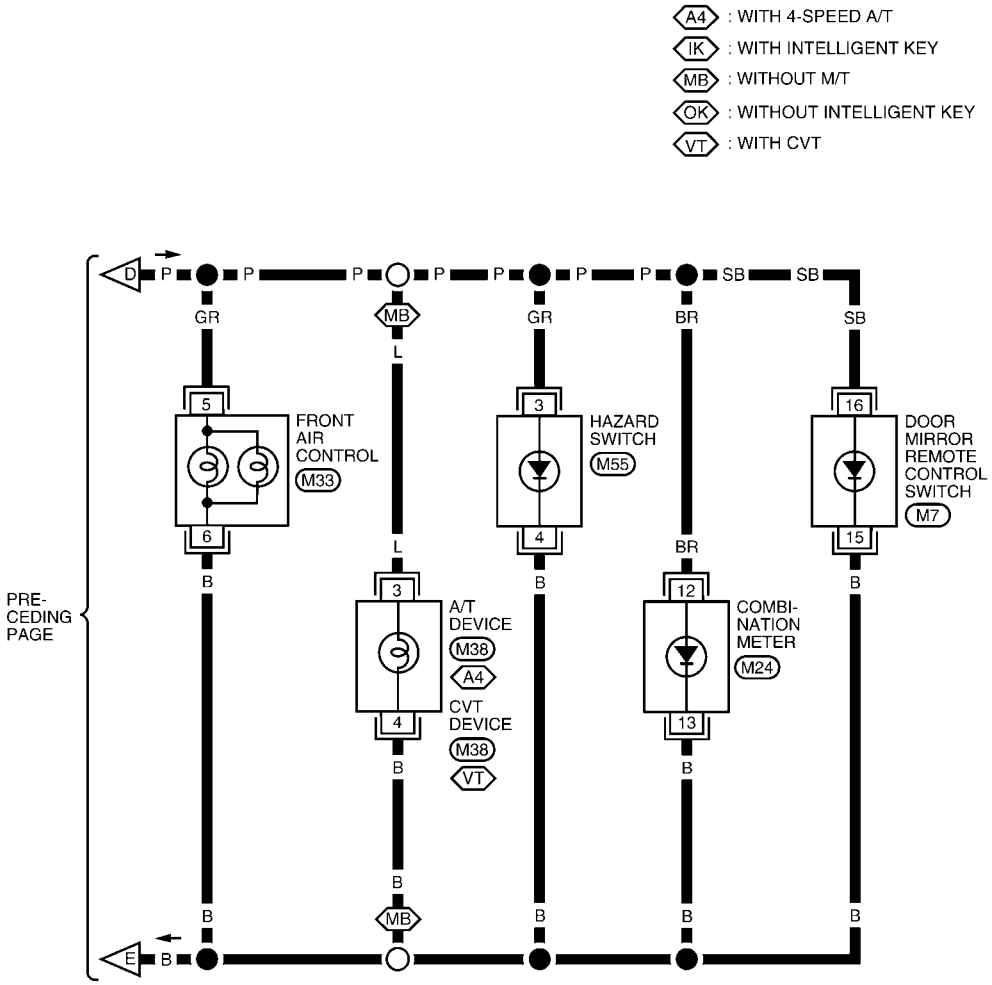

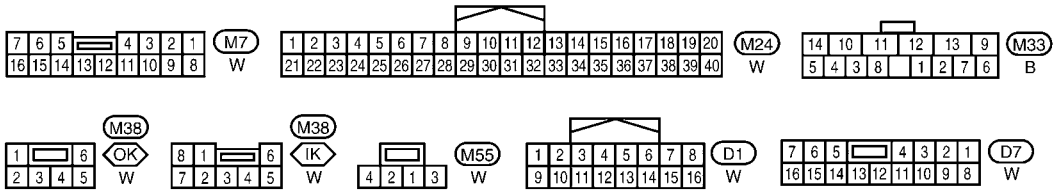

ALLWA0130GB

Bulb Replacement

INFOID:0000000001704484

GLOVE BOX LAMP

1. Remove glove box assembly. Refer to IP-10 .

2. Turn bulb socket (1) counterclockwise and remove it.
3. Remove bulb (2).

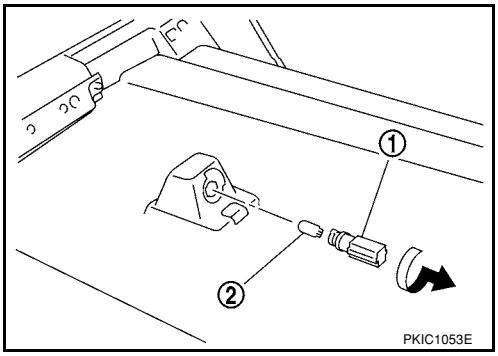

BULB SPECIFICATIONS

Headlamp

INFOID:0000000001704485

Item	Wattage (W)
High/Low (Halogen type)	60/55 (HB2)

Exterior Lamp

INFOID:0000000001704486

Item		Wattage (W)
Front combination lamp	Turn signal lamp	21 (amber)
	Parking (clearance) lamp	5
Rear combination lamp	Stop/Tail lamp	21/5
	Turn signal lamp	21 (amber)
	Back-up lamp	21
Front fog lamp		35 (H8)
License plate lamp		5
High-mounted stop lamp	Hatchback	LED
	Sedan	18

Interior Lamp/Illumination

INFOID:0000000001704487

Item	Wattage (W)
Glove box lamp	1.4
Map lamp	8
Room lamp	8
Luggage compartment lamp	5

SECTION LU
ENGINE LUBRICATION SYSTEM

CONTENTS

SERVICE INFORMATION 2

PRECAUTIONS 2
Precaution for Supplemental Restraint System (SRS) "AIR BAG" and "SEAT BELT PRE-TENSIONER" 2
Precaution for Liquid Gasket 2

PREPARATION 3
Special Service Tool 3
Commercial Service Tool 3

LUBRICATION SYSTEM 5
Lubrication Circuit 5

ENGINE OIL 6
Inspection 6
Changing Engine Oil 7

OIL FILTER 9
Removal and Installation 9

SERVICE DATA AND SPECIFICATIONS (SDS) 10
Standard and Limit 10

SERVICE INFORMATION

PRECAUTIONS

Precaution for Supplemental Restraint System (SRS) "AIR BAG" and "SEAT BELT PRE-TENSIONER"

INFOID:0000000001790697

The Supplemental Restraint System such as “AIR BAG” and “SEAT BELT PRE-TENSIONER”, used along with a front seat belt, helps to reduce the risk or severity of injury to the driver and front passenger for certain types of collision. This system includes seat belt switch inputs and dual stage front air bag modules. The SRS system uses the seat belt switches to determine the front air bag deployment, and may only deploy one front air bag, depending on the severity of a collision and whether the front occupants are belted or unbelted.
Information necessary to service the system safely is included in the SRS and SB section of this Service Manual.

WARNING:

- **To avoid rendering the SRS inoperative, which could increase the risk of personal injury or death in the event of a collision which would result in air bag inflation, all maintenance must be performed by an authorized NISSAN/INFINITI dealer.**
- **Improper maintenance, including incorrect removal and installation of the SRS, can lead to personal injury caused by unintentional activation of the system. For removal of Spiral Cable and Air Bag Module, see the SRS section.**
- **Do not use electrical test equipment on any circuit related to the SRS unless instructed to in this Service Manual. SRS wiring harnesses can be identified by yellow and/or orange harnesses or harness connectors.**

Precaution for Liquid Gasket

INFOID:0000000001702514

LIQUID GASKET APPLICATION PROCEDURE

1. Remove old liquid gasket adhering to the liquid gasket application surface and the mating surface.
   - Remove liquid gasket completely from the liquid gasket application surface, bolts, and bolt holes.
2. Wipe the liquid gasket application surface and the mating surface with white gasoline (lighting and heating use) to remove adhering moisture, grease and foreign materials.
3. Attach liquid gasket tube to the Tool.
   Use Genuine Silicone RTV Sealant or equivalent. Refer to GI-42.

   Tool number :WS39930000 (—)

   - Within 5 minutes of liquid gasket application, install the mating component.
   - If liquid gasket protrudes, wipe it off immediately.
   - Do not retighten bolts or nuts after the installation.
   - Wait 30 minutes or more after installation before refilling engine oil and engine coolant.

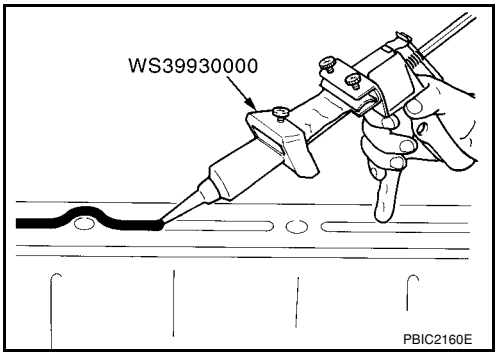

PREPARATION

Special Service Tool

INFOID:0000000001702515

The actual shapes of Kent-Moore tools may differ from those of special service tools illustrated here.

Tool number (Kent-Moore No.) Tool name		Description
ST25051001 (J-25695-1) Oil pressure gauge	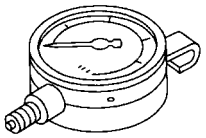 NT050	Measuring oil pressure **Maximum measuring range: 2,452 kPa (25 kg/cm^2, 356 psi)**
ST25052000 (J-25695-2) Hose	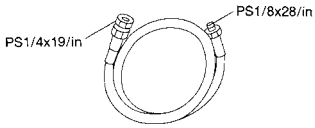 S-NT559	Adapting oil pressure gauge to oil pan (upper)
KV10115801 (J-38956) Oil filter wrench	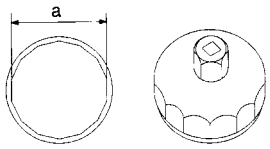 S-NT375	Removing oil filter **a: 64.3 mm (2.531 in)**
WS39930000 (—) Tube presser	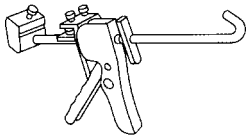 NT052	Pressing the tube of liquid gasket

Commercial Service Tool

INFOID:0000000001702516

Tool name	Description
Power tool 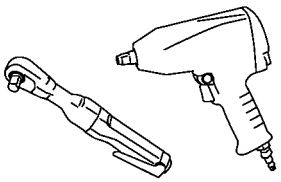 PBIC0190E	Loosening nuts and bolts
Deep socket 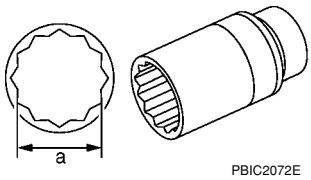 PBIC2072E	Removing and installing oil pressure sensor **a: 26 mm (1.02 in)**

LUBRICATION SYSTEM

Lubrication Circuit

INFOID:0000000001702517

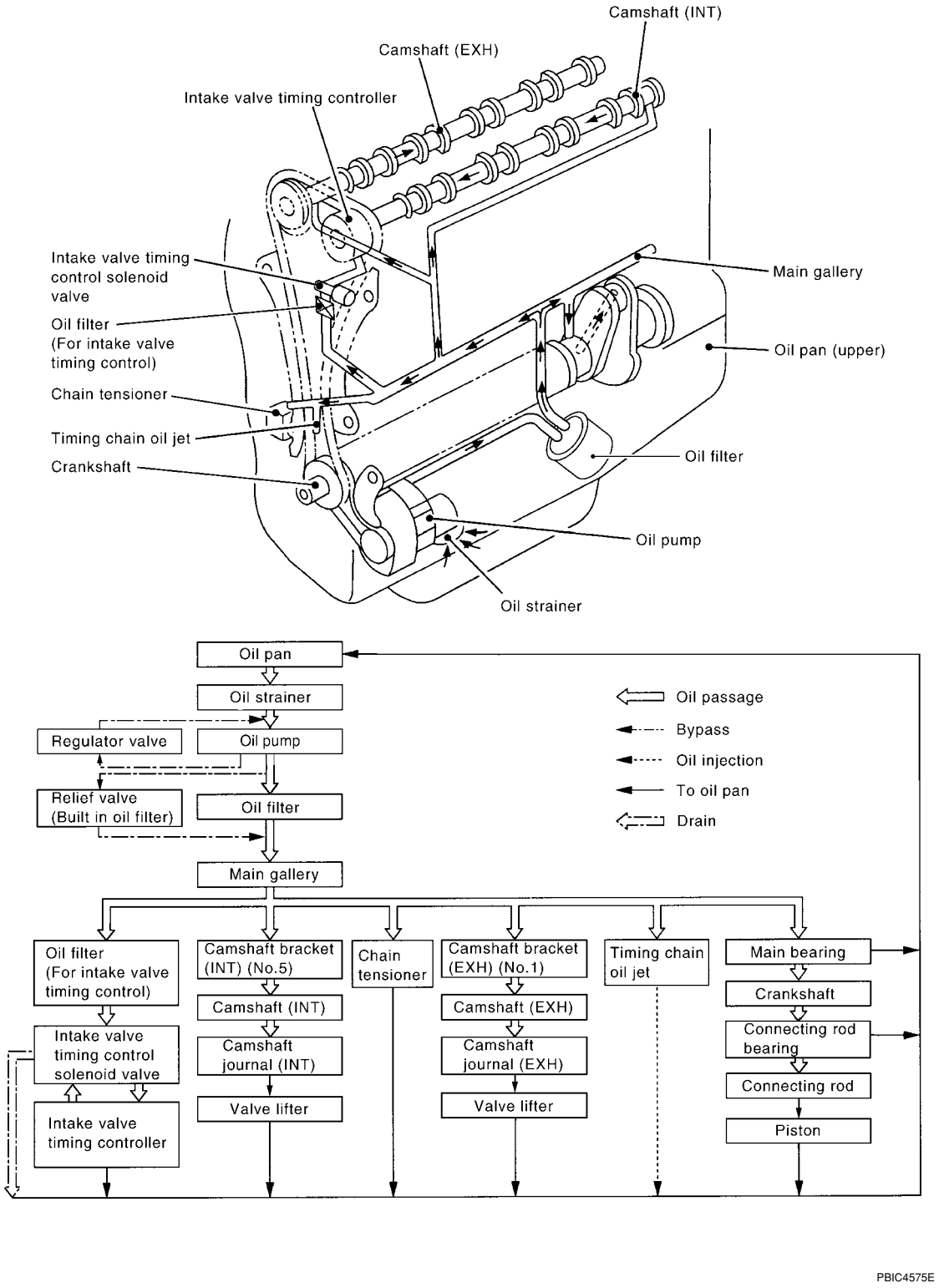

ENGINE OIL

Inspection

INFOID:0000000001702518

ENGINE OIL LEVEL

NOTE:
Before starting engine, park vehicle on a level surface and check the engine oil level. If engine is already started, stop it and allow 10 minutes before checking.

1. Pull out oil level gauge and wipe it clean.
2. Insert oil level gauge and make sure the engine oil level is within the range (A) as shown.
3. If it is out of range, adjust it.

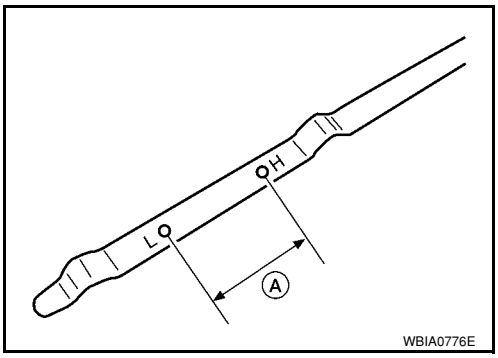

ENGINE OIL APPEARANCE

- Check engine oil for white turbidity or heavy contamination.
- If engine oil becomes turbid and white, it is highly probable that it is contaminated with engine coolant. Repair or replace damaged parts.

ENGINE OIL LEAKAGE

Check for engine oil leakage around the following areas:

- Oil pan (upper and lower)
- Oil pan drain plug
- Oil pressure switch
- Oil filter
- Intake valve timing control solenoid valve
- Front cover
- Mating surface between cylinder block and cylinder head
- Mating surface between cylinder head and rocker cover
- Crankshaft oil seals (front and rear)
- Oil filter (for intake valve timing control)

OIL PRESSURE CHECK

WARNING:

- **Be careful not to burn yourself, as engine oil may be hot.**
- **For engine oil pressure check the transaxle should be in " Park position" (A/T models) and (CVT models) or "Neutral position" (M/T models), and apply the parking brake securely.**

1. Disconnect harness connector at oil pressure switch (1), and remove oil pressure switch using a suitable tool.
   - Oil pan (lower) (2)
   - ⇐ Front

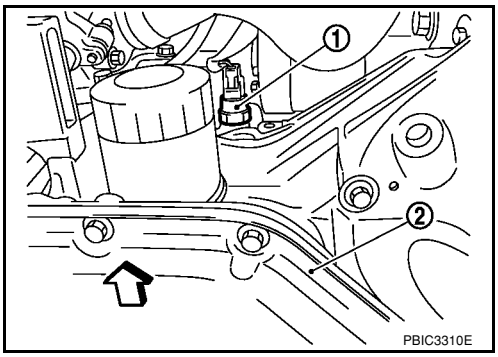

2. Install oil pressure gauge and hose.

Tool number : ST25051001 (J-25695-1)
: ST25052000 (J-25695-2)

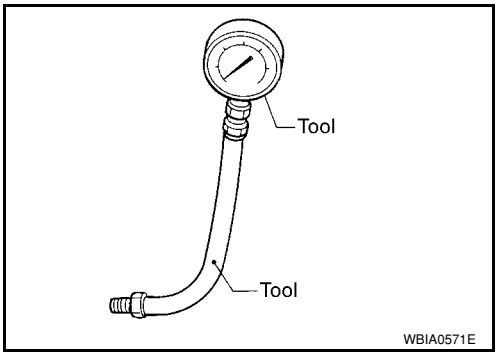

3. Check engine oil level. Refer to LU-6, "Inspection".
4. Start engine and warm it up to normal operating temperature.
5. Check oil pressure with engine running under no-load.
NOTE:
When engine oil temperature is low, engine oil pressure becomes high.

Engine oil pressure [Engine oil temperature at 80°C (176°F)]

Engine speed rpm	Approximate discharge pressure kPa (bar, kg/cm^2, psi)
Idle speed	More than 60 (0.60, 0.61, 9)
2,000	More than 200 (2.0, 2.0, 29)

If difference is extreme, check oil passage and oil pump for oil leaks.

6. After the inspections, install oil pressure switch as follows:
a. Remove old liquid gasket adhering to oil pressure switch and engine.
b. Apply liquid gasket and tighten oil pressure switch to specification.
Use Genuine Silicone RTV Sealant or equivalent. Refer to GI-42.

Oil pressure switch : 14.7 N·m (1.5 kg-m, 11 ft-lb)

c. Check engine oil level. Refer to LU-6, "Inspection".
d. After warming up engine, make sure there are no engine leaks of oil with running engine.

Changing Engine Oil

INFOID:0000000001702519

WARNING:
- **Be careful not to burn yourself, as engine oil may be hot.**
- **Prolonged and repeated contact with used engine oil may cause skin cancer; try to avoid direct skin contact with used engine oil. If skin contact is made, wash thoroughly with soap or hand cleaner as soon as possible.**

1. Warm up engine, park vehicle on a level surface and check for engine oil leakage from engine components. Refer to LU-6, "Inspection".
2. Stop engine and wait for 10 minutes.

3. Loosen oil filler cap (1) and then remove drain plug (2).
   - Oil filter (3)
   - ⇐ Engine front
4. Drain engine oil.
5. Install drain plug (2) with new washer. Refer to EM-24, "Component".
   CAUTION:
   Be sure to clean drain plug (2) and install with new washer.
6. Refill with new engine oil.
   Refer to MA-10.
   CAUTION:
   - **The refill capacity depends on the engine oil temperature and drain time. Use these specifications for reference only.**
   - **Always use oil level gauge to determine the proper amount of engine oil in the engine.**
7. Warm up engine and check area around drain plug (2) and oil filter (3) for engine oil leakage.
8. Stop engine and wait for 10 minutes.
9. Check the engine oil level. Refer to LU-6, "Inspection".

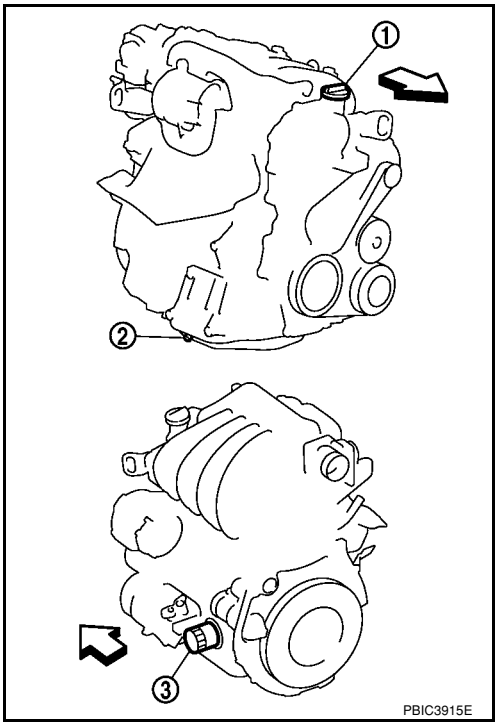

OIL FILTER

Removal and Installation

INFOID:0000000001702520

REMOVAL

1. Remove oil filter using Tool (A).

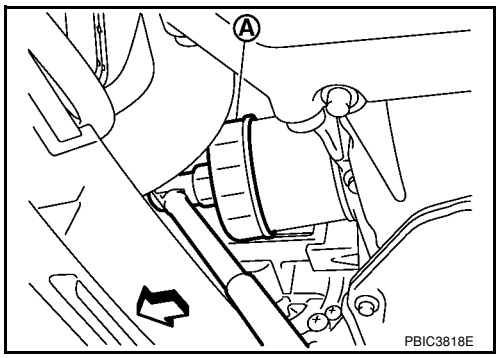

Tool number : KV10115801 (J-38956)

- ⇐ Front

CAUTION:

- **Oil filter is provided with relief valve. Use Genuine NISSAN Oil Filter or equivalent.**
- **Be careful not to get burned when engine and engine oil may be hot.**
- **When removing, prepare a shop cloth to absorb any engine oil leakage or spillage.**
- **Do not allow engine oil to adhere to drive belt.**
- **Completely wipe off any engine oil that adheres to engine and vehicle.**

INSTALLATION

1. Remove foreign materials adhering to the oil filter installation surface.
2. Apply new engine oil to the oil seal contact surface of new oil filter.

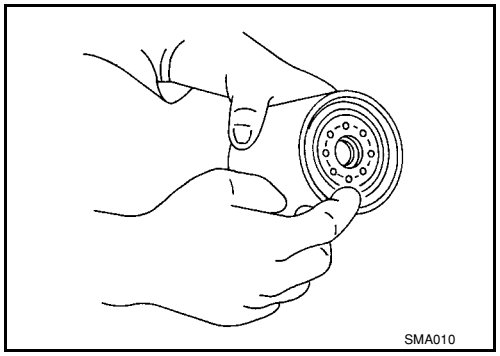

3. Screw oil filter manually until it touches the installation surface, then tighten it by 2/3 turn. Or tighten to specification.

Oil filter: : 17.7 N·m (1.8 kg-m, 13 ft-lb)

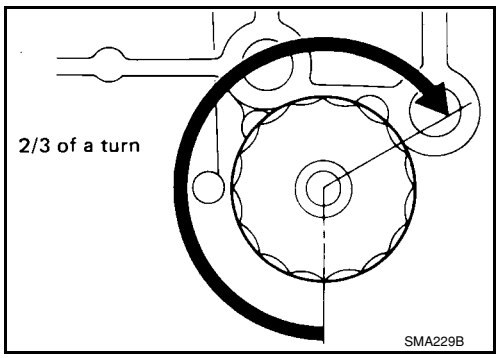

INSPECTION AFTER INSTALLATION

1. Check the engine oil level. Refer to LU-6.
2. Start engine, and make sure there is no leaks of engine oil.
3. Stop engine and wait for 10 minutes.
4. Check the engine oil level and adjust engine oil. Refer to LU-6.

SERVICE DATA AND SPECIFICATIONS (SDS)

Standard and Limit

INFOID:0000000001702521

OIL PRESSURE

Engine speed rpm	Approximate discharge pressure kPa (bar, kg/cm^2, psi)
Idle speed 2,000	60 (0.60, 0.61, 9) 200 (2.0, 2.0, 29)

Oil Capacity

Unit: ℓ (US qt, Imp qt)

Drain and refill	With oil filter change	Approximately 3.9 (4 1/8, 3 3/8)
	Without oil filter change	Approximately 3.7 (3 7/8, 3 1/4)
Dry engine (engine overhaul)		Approximately 4.9 (5 1/8, 4 3/8)

SECTION MA
MAINTENANCE

CONTENTS

SERVICE INFORMATION 2

PRECAUTIONS 2
Precaution for Supplemental Restraint System (SRS) "AIR BAG" and "SEAT BELT PRE-TENSIONER" 2

PREPARATION 3
Special Service Tool 3
Commercial Service Tool 3

GENERAL MAINTENANCE 4
Explanation of General Maintenance 4
General Maintenance 4

PERIODIC MAINTENANCE 6
Introduction of Periodic Maintenance 6
Schedule 1 6
Schedule 2 8

RECOMMENDED FLUIDS AND LUBRICANTS 10
Fluids and Lubricants 10
SAE Viscosity Number 10
Anti-freeze Coolant Mixture Ratio 11

ENGINE MAINTENANCE 12
Drive Belts 12
Checking Drive Belts 12
Tension Adjustment 12
Changing Engine Coolant 12
Inspection 14
Checking Fuel Line 14
Changing Air Cleaner Filter 14
Changing Engine Oil 15
Engine Oil Filter 16
Changing Spark Plugs 17
Checking EVAP Vapor Line 18

CHASSIS AND BODY MAINTENANCE 19
Changing In-cabin Microfilter 19
Checking Exhaust System 19
Checking CVT Fluid 19
Changing CVT Fluid 20
Checking Clutch Fluid Level and Leaks 21
Checking Clutch System 21
Checking M/T Oil 21
Changing M/T Oil 21
Checking A/T Fluid 22
Changing A/T Fluid 22
Balancing Wheels 23
Rotation 23
Checking Brake Fluid Level and Leaks 23
Checking Brake Line and Cables 24
Changing Brake Fluid 24
Checking Disc Brake 24
Axle and Suspension Parts 25
Drive Shaft 26
Lubricating Locks, Hinges and Hood Latch 27
Checking Seat Belts, Buckles, Retractors, Anchors and Adjusters 27

SERVICE INFORMATION

PRECAUTIONS

Precaution for Supplemental Restraint System (SRS) "AIR BAG" and "SEAT BELT PRE-TENSIONER"

INFOID:0000000001704717

The Supplemental Restraint System such as “AIR BAG” and “SEAT BELT PRE-TENSIONER”, used along with a front seat belt, helps to reduce the risk or severity of injury to the driver and front passenger for certain types of collision. This system includes seat belt switch inputs and dual stage front air bag modules. The SRS system uses the seat belt switches to determine the front air bag deployment, and may only deploy one front air bag, depending on the severity of a collision and whether the front occupants are belted or unbelted.
Information necessary to service the system safely is included in the SR and SB section of this Service Manual.

WARNING:

- **To avoid rendering the SRS inoperative, which could increase the risk of personal injury or death in the event of a collision which would result in air bag inflation, all maintenance must be performed by an authorized NISSAN/INFINITI dealer.**
- **Improper maintenance, including incorrect removal and installation of the SRS, can lead to personal injury caused by unintentional activation of the system. For removal of Spiral Cable and Air Bag Module, see the SR section.**
- **Do not use electrical test equipment on any circuit related to the SRS unless instructed to in this Service Manual. SRS wiring harnesses can be identified by yellow and/or orange harnesses or harness connectors.**

PREPARATION

Special Service Tool

INFOID:0000000001704718

The actual shapes of Kent-Moore tools may differ from those of special service tools illustrated here.

Tool number (Kent-Moore No.) Tool name	Description
KV10115801 (J-38956) Oil filter wrench 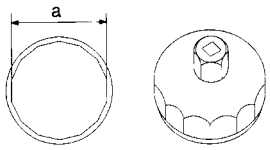 S-NT375	Removing and installing oil filter **a: 64.3 mm (2.531 in)**
KV991J0010 (J-23688) Engine coolant refractometer 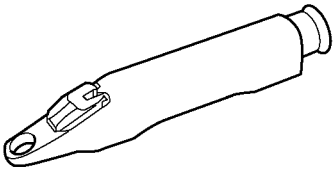 WBIA0539E	Checking concentration of ethylene glycol in engine coolant
KV991J0070 (J-45695) Coolant Refill Tool 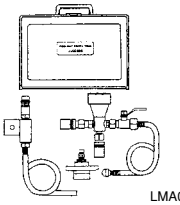 LMA053	Refilling engine cooling system

Commercial Service Tool

INFOID:0000000001704719

(Kent-Moore No.) Tool name	Description
Power tool 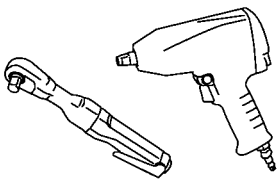 PBIC0190E	Loosening bolts and nuts
Spark plug wrench 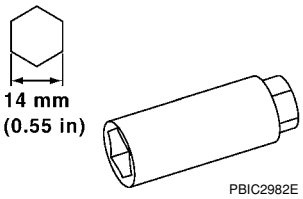 PBIC2982E	Removing and installing spark plug

GENERAL MAINTENANCE

Explanation of General Maintenance

INFOID:0000000001704720

General Maintenance

INFOID:0000000001704721

General maintenance includes those items which should be checked during the normal day-to-day operation of the vehicle. They are essential if the vehicle is to continue operating properly. The owners can perform checks and inspections themselves or they can have their NISSAN dealers do them.

OUTSIDE THE VEHICLE

The maintenance items listed here should be performed from time to time, unless otherwise specified.

Item		Reference page
Tires	Check the pressure including the spare, at least once a month and always prior to a long distance trip. Adjust to the specified pressure if necessary. Check carefully for damage, cuts or excessive wear.	WT-25, "Tire"
Wheel nuts	When checking the tires, make sure no nuts are missing, and check for any loose nuts. Tighten if necessary.	WT-6, "Rotation"
Windshield	Clean the windshield on a regular basis. Check the windshield at least every six months for cracks or other damage. Repair as necessary.	—
Tire rotation	Tires should be rotated every 12,000 km (7,500 miles).	WT-6, "Rotation"
Transmitter components in tire pressure monitoring system	Replace grommet seal, valve core and cap of the transmitter in TPMS every tire replacement by reaching wear limit of tire.	WT-7
Wheel alignment and balance	If the vehicle pulls to either side while driving on a straight and level road, or if you detect uneven or abnormal tire wear, there may be a need for wheel alignment. If the steering wheel or seat vibrates at normal highway speeds, wheel balancing may be needed.	FSU-6, "Wheel Alignment Inspection" and WT-6, "Balancing Wheels"
Windshield wiper blades	Check for cracks or wear if they do not wipe properly.	—
Doors and engine hood	Check that all doors and the engine hood operate smoothly as well as the trunk lid and back hatch. Also make sure that all latches lock securely. Lubricate if necessary. Make sure that the secondary latch keeps the hood from opening when the primary latch is released. When driving in areas using road salt or other corrosive materials, check lubrication frequently.	MA-27, "Lubricating Locks, Hinges and Hood Latch"
Lamps	Make sure that the headlamps, stop lamps, tail lamps, turn signal lamps, and other lamps are all operating properly and installed securely. Also check headlamp aim. Clean the headlamps on a regular basis.	—

INSIDE THE VEHICLE

The maintenance items listed here should be checked on a regular basis, such as when performing periodic maintenance, cleaning the vehicle, etc.

Item		Reference page
Warning lamps and buzzers/chimes	Make sure that all warning lamps and buzzers/chimes are operating properly.	—
Windshield wiper and washer	Check that the wipers and washer operate properly and that the wipers do not streak.	—
Windshield defroster	Check that the air comes out of the defroster outlets properly and in sufficient quantity when operating the heater or air conditioning.	—
Steering wheel	Check that it has the specified play. Be sure to check for changes in the steering condition, such as excessive play, hard steering or strange noises. **Free play: Less than 35 mm (1.38 in)**	—
Seats	Check seat position controls such as seat adjusters, seat back recliner, etc. to make sure they operate smoothly and that all latches lock securely in every position. Check that the head restraints move up and down smoothly and that the locks (if equipped) hold securely in all latched positions. Check that the latches lock securely for folding-down rear seat backs.	—

Item		Reference page
Seat belts	Check that all parts of the seat belt system (e.g. buckles, anchors, adjusters and retractors) operate properly and smoothly and are installed securely. Check the belt webbing for cuts, fraying, wear or damage.	MA-27, "Checking Seat Belts, Buckles, Retractors, Anchors and Adjusters"
Accelerator pedal	Check the pedal for smooth operation and make sure the pedal does not catch or require uneven effort. Keep the floor mats away from the pedal.	—
Clutch pedal	Make sure the pedal operates smoothly and check that it has the proper free play.	MA-21
Brakes	Check that the brake does not pull the vehicle to one side when applied.	—
Brake pedal and booster	Check the pedal for smooth operation and make sure it has the proper distance under it when depressed fully. Check the brake booster function. Be sure to keep floor mats away from the pedal.	BR-5, "Inspection and Adjustment" and BR-18, "On Board Inspection"
Parking brake	Check that the lever has the proper travel and make sure that the vehicle is held securely on a fairly steep hill when only the parking brake is applied.	PB-4, "On-Vehicle Service"
Automatic transaxle "Park" mechanism	Check that the lock release button on the selector lever operates properly and smoothly. On a fairly steep hill check that the vehicle is held securely with the selector lever in the "P" position without applying any brakes.	—
CVT P (Park) position mechanism	On a fairly steep hill check that the vehicle is held securely with the selector lever in the "P" position without applying any brakes.	—

UNDER THE HOOD AND VEHICLE
The maintenance items listed here should be checked periodically (e.g. each time you check the engine oil or refuel).

Item		Reference page
Windshield washer fluid	Check that there is adequate fluid in the tank.	—
Engine coolant level	Check the coolant level when the engine is cold.	CO-8, "Inspection"
A/C condenser, radiator and hoses	Check the front of the condenser and radiator and clean off any dirt, insects, leaves, etc., that may have accumulated. Make sure the radiator hoses have no cracks, deformation, deterioration or loose connections.	—
Brake and clutch fluid levels	Make sure that the brake and clutch fluid levels are between the "MAX" and "MIN" lines on the reservoirs.	BR-8, "On Board Inspection" and MA-21, "Checking Clutch Fluid Level and Leaks"
Battery	Check the fluid level in each cell. It should be between the "MAX" and "MIN" lines. Vehicles operated in high temperatures or under severe conditions require frequent checks of the battery fluid level.	—
Engine drive belts	Make sure that no belt is frayed, worn, cracked or oily.	MA-12
Engine oil level	Check the level on the dipstick after parking the vehicle on a level spot and turning off the engine.	LU-6, "Inspection"
Automatic transaxle fluid level	Check the level on the dipstick after putting the selector lever in "P" with the engine idling.	MA-19 and MA-22
Exhaust system	Make sure there are no loose supports, cracks or holes. If the sound of the exhaust seems unusual or there is a smell of exhaust fumes, immediately locate the trouble and correct it.	MA-19
Underbody	The underbody is frequently exposed to corrosive substances such as those used on icy roads or to control dust. It is very important to remove these substances, otherwise rust will form on the floor pan, frame, fuel lines and around the exhaust system. At the end of winter, the underbody should be thoroughly flushed with plain water, being careful to clean those areas where mud and dirt can easily accumulate.	—
Fluid leaks	Check under the vehicle for fuel, oil, water or other fluid leaks after the vehicle has been parked for a while. Water dripping from the air conditioner after use is normal. If you should notice any leaks or gasoline fumes are evident, check for the cause and correct it immediately.	—

PERIODIC MAINTENANCE

Introduction of Periodic Maintenance

INFOID:0000000001704722

Two different maintenance schedules are provided, and should be used, depending upon the conditions in which the vehicle is mainly operated. **After 60,000 miles (96,000 km) or 48 months, continue the periodic maintenance at the same mileage/time intervals.**

Schedule 1	Follow Periodic Maintenance Schedule 1 if your driving habits frequently includes one or more of the following driving conditions: • Repeated short trips of less than 5 miles (8 km). • Repeated short trips of less than 10 miles (16 km) with outside temperatures remaining below freezing. • Operating in hot weather in stop-and-go “rush hour” traffic. • Extensive idling and/or low speed driving for long distances, such as police, taxi or door-to-door delivery use. • Driving in dusty conditions. • Driving on rough, muddy, or salt spread roads. • Towing a trailer, using a camper or a car-top carrier.	Emission Control System Maintenance	MA-6
		Chassis and Body Maintenance	MA-6
Schedule 2	Follow Periodic Maintenance Schedule 2 if none of the driving conditions shown in Schedule 1 apply to your driving habits.	Emission Control System Maintenance	MA-8
		Chassis and Body Maintenance	MA-8

Schedule 1

INFOID:0000000001704723

Emission Control System Maintenance

Abbreviations: R = Replace. I = Inspect. Correct or replace if necessary. [ ]: At the mileage intervals only

MAINTENANCE OPERATION		MAINTENANCE INTERVAL								Reference Section - Page or - Content Title
Perform at number of miles, kilometers or months, whichever comes first.	Miles x 1,000 (km x 1,000) Months	3.75 (6) 3	7.5 (12) 6	11.25 (18) 9	15 (24) 12	18.75 (30) 15	22.5 (36) 18	26.25 (42) 21	30 (48) 24	
Drive belt	NOTE (1)									MA-12
Air cleaner filter	NOTE (2)								[R]	MA-14
EVAP vapor lines									I*	MA-18
Fuel lines									I*	MA-14
Fuel filter	NOTE (3)									—
Engine coolant	NOTE (4)									MA-12
Engine oil		R	R	R	R	R	R	R	R	MA-15
Engine oil filter (Use genuine oil filter or equivalent)		R	R	R	R	R	R	R	R	MA-16
Spark plugs (Iridium/ platinum-tipped type)		Replace every 105,000 miles (169,000 km)								MA-17
Intake and exhaust valve clearance	NOTE (5)									EM-104, "Standard and Limit"

Abbreviations: R = Replace. I = Inspect. Correct or replace if necessary. [ ]: At the mileage intervals only

MAINTENANCE OPERATION		MAINTENANCE INTERVAL								Reference Section - Page or - Content Title
Perform at number of miles, kilometers or months, whichever comes first.	Miles x 1,000 (km x 1,000) Months	33.75 (54) 27	37.5 (60) 30	41.25 (66) 33	45 (72) 36	48.75 (78) 39	52.5 (84) 42	56.25 (90) 45	60 (96) 48	
Drive belt	NOTE (1)								I*	MA-12
Air cleaner filter	NOTE (2)								[R]	MA-14
EVAP vapor lines									I*	MA-18
Fuel lines									I*	MA-14
Fuel filter	NOTE (3)									—
Engine coolant	NOTE (4)								R*	MA-12
Engine oil		R	R	R	R	R	R	R	R	MA-15
Engine oil filter (Use genuine oil filter or equivalent)		R	R	R	R	R	R	R	R	MA-16
Spark plugs (Iridium/ platinum-tipped type)		Replace every 105,000 miles (169,000 km)								MA-17
Intake and exhaust valve clearance	NOTE (5)									EM-104

(1) After 60,000 miles (96,000 km) or 48 months, inspect every 15,000 miles (24,000 km) or 12 months. Replace the drive belts if found damaged.

(2) If operating mainly in dusty conditions, more frequent maintenance may be required.

(3) Maintenance-free item. For service procedures, go to the FL section.

(4) After 60,000 miles (96,000 km) or 48 months, replace every 30,000 miles (48,000 km) or 24 months.

(5) If valve noise increases, inspect valve clearance.

* Maintenance items and intervals with "*" are recommended by NISSAN for reliable vehicle operation. The owner need not perform such maintenance in order to maintain the emission warranty or manufacturer recall liability. Other maintenance items and intervals are required.

Chassis and Body Maintenance

Abbreviations: R = Replace. I = Inspect. Correct or replace if necessary. L = Lubricate.

MAINTENANCE OPERATION		MAINTENANCE INTERVAL								Reference Section - Page or - Content Title
Perform at number of miles, kilometers or months, whichever comes first.	Miles x 1,000 (km x 1,000) Months	3.75 (6) 3	7.5 (12) 6	11.25 (18) 9	15 (24) 12	18.75 (30) 15	22.5 (36) 18	26.25 (42) 21	30 (48) 24	
Brake lines & cables					I				I	MA-24
Brake pads, rotors, drums & linings			I		I		I		I	MA-24
Manual transaxle oil or automatic transaxle fluid	NOTE (1)				I				I	MA-19 , MA-22 or MA-21
CVT fluid	NOTE (2)				I				I	
Steering gear & linkage, axle & suspension parts			I		I		I		I	MA-25, PS-12
Tire rotation	NOTE (3)									WT-6
Front drive shaft boots			I		I		I		I	MA-26

MAINTENANCE OPERATION		MAINTENANCE INTERVAL								Reference Section - Page or - Content Title
Perform at number of miles, kilometers or months, whichever comes first.	Miles x 1,000 (km x 1,000) Months	3.75 (6) 3	7.5 (12) 6	11.25 (18) 9	15 (24) 12	18.75 (30) 15	22.5 (36) 18	26.25 (42) 21	30 (48) 24	
Exhaust system			I		I		I		I	MA-19
In-cabin microfilter					R				R	MA-19

Abbreviations: R = Replace. I = Inspect. Correct or replace if necessary. L = Lubricate.

MAINTENANCE OPERATION		MAINTENANCE INTERVAL								Reference Section - Page or - Content Title
Perform at number of miles, kilometers or months, whichever comes first.	Miles x 1,000 (km x 1,000) Months	33.75 (54) 27	37.5 (60) 30	41.25 (66) 33	45 (72) 36	48.75 (78) 39	52.5 (84) 42	56.25 (90) 45	60 (96) 48	
Brake lines & cables					I				I	MA-24
Brake pads, rotors, drums & linings			I		I		I		I	MA-24
Manual transaxle oil or automatic transaxle fluid	NOTE (1)				I				I	MA-21 or MA-22
CVT fluid	NOTE (2)				I				I	MA-19
Steering gear & linkage, axle & suspension parts			I		I		I		I	MA-25, PS-12
Tire rotation	NOTE (3)									MA-23
Front drive shaft boots			I		I		I		I	MA-26
Exhaust system			I		I		I		I	MA-19
In-cabin microfilter					R				R	MA-19

(1) If towing a trailer, using a camper or a car-top carrier, or driving on rough or muddy roads, change (not just inspect) oil (exc. LSD) at every 30,000 miles (48,000 km) or 24 months, and change LSD gear oil every 15,000 miles (24,000 km) or 12 months.

(2) If towing a trailer, using a camper or a car-top carrier, or driving on rough or muddy roads, inspect CVT fluid deterioration with CONSULT-II every 60,000 miles (96,000 km), then change CVT fluid NS-2 if necessary. If CONSULT-II is not available, change (not just inspect) CVT fluid NS-2 every 60,000 miles (96,000 km). **Using transmission fluid other than Genuine NISSAN CVT Fluid NS-2 will damage the CVT, which is not covered by the NISSAN new vehicle limited warranty.**

(3) Refer to “Tire rotation” under the “GENERAL MAINTENANCE” heading earlier in this section.

Schedule 2

INFOID:0000000001704724

Emission Control System Maintenance

Abbreviations: R = Replace. I = Inspect. Correct or replace if necessary. [ ]: At the mileage intervals only

MAINTENANCE OPERATION		MAINTENANCE INTERVAL								Reference Section - Page or - Content Title
Perform at number of miles, kilometers or months, whichever comes first.	Miles x 1,000 (km x 1,000) Months	7.5 (12) 6	15 (24) 12	22.5 (36) 18	30 (48) 24	37.5 (60) 30	45 (72) 36	52.5 (84) 42	60 (96) 48	
Drive belt	NOTE (1)								I*	MA-12
Air cleaner filter					[R]				[R]	MA-14
EVAP vapor lines					I*				I*	MA-18
Fuel lines					I*				I*	MA-14
Fuel filter	NOTE (2)									—
Engine coolant	NOTE (3)								R*	MA-12
Engine oil		R	R	R	R	R	R	R	R	MA-15
Engine oil filter (Use genuine oil filter or equivalent.)		R	R	R	R	R	R	R	R	MA-16

MAINTENANCE OPERATION		MAINTENANCE INTERVAL								Reference Section - Page or - Content Title
Perform at number of miles, kilometers or months, whichever comes first.	Miles x 1,000 (km x 1,000) Months	7.5 (12) 6	15 (24) 12	22.5 (36) 18	30 (48) 24	37.5 (60) 30	45 (72) 36	52.5 (84) 42	60 (96) 48	
Spark plugs (Iridium/platinum-tipped type)		Replace every 105,000 miles (169,000 km)								MA-17
Intake and exhaust valve clearance)	NOTE (4)									EM-104, "Standard and Limit"

(1) After 60,000 miles (96,000 km) or 48 months, inspect every 15,000 miles (24,000 km) or 12 months. Replace the drive belt if found damaged or if the auto belt tensioner reading reaches the maximum limit.

(2) Maintenance-free item.

(3) After 60,000 miles (96,000 km) or 48 months, replace every 30,000 miles (48,000 km) or 24 months.

(4) If valve noise increases, inspect valve clearance.

Maintenance items and intervals with "*" are recommended by NISSAN for reliable vehicle operation. The owner need not perform such maintenance in order to maintain the emission warranty or manufacturer recall liability. Other maintenance items and intervals are required.

Chassis and Body Maintenance

Abbreviations: R = Replace. I = Inspect. Correct or replace if necessary. L = Lubricate.

MAINTENANCE OPERATION		MAINTENANCE INTERVAL								Reference Section - Page or - Content Title
Perform at number of miles, kilometers or months, whichever comes first.	Miles x 1,000 (km x 1,000) Months	7.5 (12) 6	15 (24) 12	22.5 (36) 18	30 (48) 24	37.5 (60) 30	45 (72) 36	52.5 (84) 42	60 (96) 48	
Brake lines & cables			I		I		I		I	MA-24
Brake pads, rotors, drums & linings			I		I		I		I	MA-24
Manual transaxle oil or automatic transaxle fluid			I		I		I		I	MA-21 or MA-22
CVT fluid	NOTE (1)		I		I		I		I	MA-19
Steering gear & linkage, axle & suspension parts					I				I	MA-25, PS-12
Tire rotation	NOTE (2)									MA-23
Front drive shaft boots			I		I		I		I	MA-26
Exhaust system					I				I	MA-19
In-cabin microfilter			R		R		R		R	MA-19

(1) Using transmission fluid other than Genuine NISSAN CVT Fluid NS-2 will damage the CVT, which is not covered by the NISSAN new vehicle limited warranty.

(2) Refer to "Tire rotation" under the "GENERAL MAINTENANCE" heading earlier in this section.

RECOMMENDED FLUIDS AND LUBRICANTS

Fluids and Lubricants

INFOID:0000000001704725

Description		Capacity (Approximate)			Recommended Fluids/Lubricants
		Liter	US measure	Imp measure	
Fuel		52.0	13 3/4 gal	11 1/2 gal	Unleaded gasoline with an octane rating of at least 87 AKI (RON 91)
Engine oil Drain and refill	With oil filter change	3.9	4 1/8 qt	3 3/8 qt	• Engine oil with API Certification Mark *1 • Viscosity SAE 5W-30
	Without oil filter change	3.7	3 7/8 qt	3 1/4 qt	
Dry engine (engine overhaul)		4.9	5 1/8 qt	4 3/8 qt	
Cooling system (with reservoir at max level)		6.8	7 1/4 qt	6 qt	Genuine NISSAN Long Life Anti-freeze Coolant or equivalent
Manual transaxle fluid (MTF)		2.0	4 1/4 pt	3 1/2 pt	EFF XT4447 M+ 75W-80 or API GL-4, Viscosity SAE 75W-80
Automatic transaxle fluid (ATF)		7.9	8 3/8 qt	7 qt	Genuine NISSAN Matic “D” ATF (Continental U.S. and Alaska) or Canada NISSAN Automatic Transmission Fluid *2
CVT fluid		8.3	8 3/4 qt	7 1/4 qt	Genuine NISSAN CVT Fluid NS-2 *3
Brake and clutch fluid		—	—	—	Genuine NISSAN Super Heavy Duty Brake Fluid*4 or equivalent DOT 3 (US FMVSS No. 116)
Multi-purpose grease		—	—	—	NLGI No. 2 (Lithium soap base)
Windshield washer fluid		4.5	4 3/4 qt	4 qt	Genuine NISSAN Windshield Washer Concentrate Cleaner & Anti-Freeze or equivalent
Air conditioning system refrigerant		0.45 ± 0.05 kg	0.99 ± 0.11 lb	0.99 ± 0.11 lb	HFC-134a (R-134a) *5
Air conditioning system oil	Type 1	120 m ℓ	4.1 fl oz	4.2 fl oz	NISSAN A/C System Lubricant Type R or equivalent *5
	Type 2	100 m ℓ	3.4 fl oz	3.5 fl oz	NISSAN A/C System Lubricant Type S or equivalent *5

*1: For further details, see “Engine Oil Recommendation”.

*2: DEXRON™ III / MERCON™ , or equivalent may also be used. Outside the continental United States and Alaska contact a NISSAN dealership for more information regarding suitable fluids, including recommended brand(s) of DEXRON™ III / MERCON™ Automatic Transmission Fluid.

*3: **Using transaxle fluid other than Genuine NISSAN CVT Fluid NS-2 will damage the CVT, which is not covered by the NISSAN new vehicle limited warranty.**

*4: Available in mainland U.S.A. through your NISSAN dealer.

*5: For further details, see “Air conditioner specification label”.

SAE Viscosity Number

INFOID:0000000001704726

NISSAN recommends the use of an energy conserving oil in order to improve fuel economy.
Select only engine oils that meet the American Petroleum Institute (API) certification and International Lubrication Standardization and Approval Committee (ILSAC) certification and SAE viscosity standard. These oils have the API certification mark on the front of the container. Oils which do not have the specified quality label should not be used as they could cause engine damage.

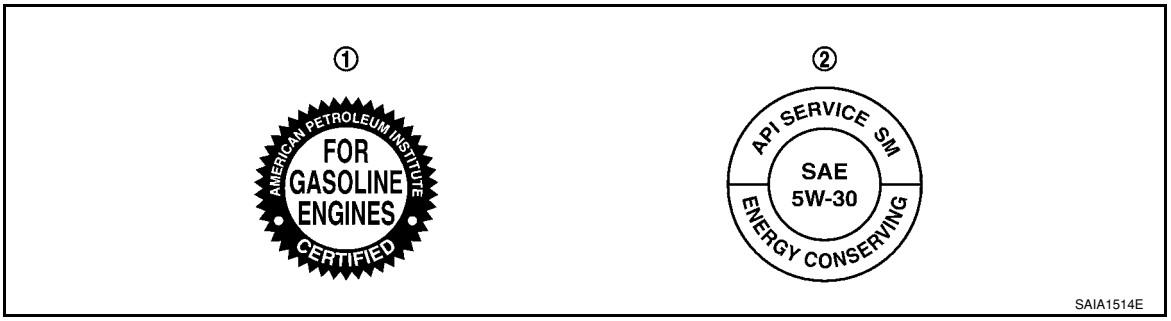

1. API certification mark
2. API service symbol

Anti-freeze Coolant Mixture Ratio

INFOID:0000000001704727

The engine cooling system is filled at the factory with a high-quality, long life, year-round, anti-freeze coolant solution. The anti-freeze solution contains rust and corrosion inhibitors. Therefore, additional cooling system additives are not necessary.

Maximum outside temperature		Genuine NISSAN Anti-freeze Coolant or equivalent	Demineralized water or distilled water
°C	°F		
-35	-30	50%	50%

CAUTION:
- **When adding or replacing coolant, be sure to use only a Genuine NISSAN Long Life Anti-Freeze coolant or equivalent with the proper mixture ratio.**
- **The use of other types of coolant solutions may damage the engine cooling system.**

ENGINE MAINTENANCE

Drive Belts

INFOID:0000000001704728

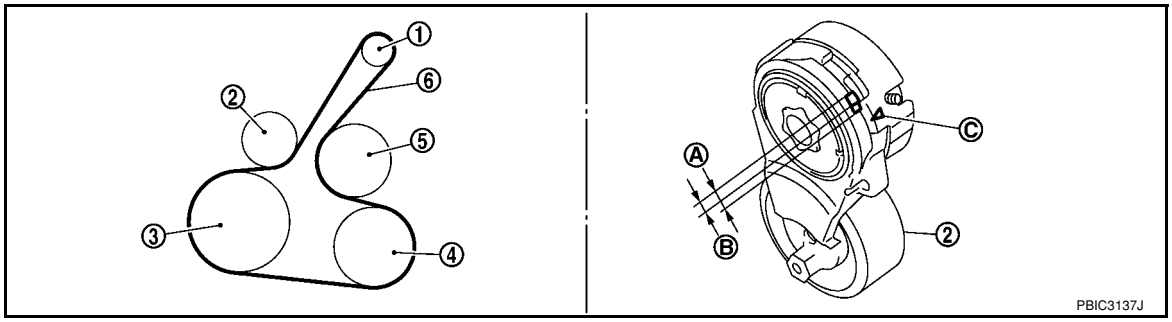

1.	Alternator	2.	Drive belt auto–tensioner	3.	Crankshaft pulley
4.	A/C compressor (models with A/C) Idler pulley (models without A/C)	5.	Water pump	6.	Drive belt
A.	Possible use range	B.	Range when new drive belt is installed	C.	Indicator

Checking Drive Belts

INFOID:0000000001704729

WARNING:
Be sure to perform this step when the engine is stopped.
- Make sure that the indicator (notch on fixed side) of drive belt auto-tensioner is within the possible use range (A).
  NOTE:
  - Check the drive belt auto-tensioner indication when the engine is cold.
  - When new drive belt is installed, the indicator (notch on fixed side) should be within the range (B) in the figure.
- Visually check entire drive belt for wear, damage or cracks.
- If the indicator (notch on fixed side) is out of the possible use range or belt is damaged, replace drive belt.

Tension Adjustment

INFOID:0000000001704730

Belt tension is not necessary, as it is automatically adjusted by drive belt auto-tensioner.

Changing Engine Coolant

INFOID:0000000001704731

WARNING:
- **To avoid being scalded, do not change engine coolant when engine is hot.**
- **Wrap a thick cloth around radiator cap and carefully remove the cap. First, turn the cap a quarter of a turn to release built-up pressure. Then turn the cap all the way.**
- **Be careful not to allow engine coolant to contact drive belt.**

DRAINING ENGINE COOLANT

1. Open radiator drain plug (1) at the bottom of radiator, and then remove radiator cap.
   - ⇦ Vehicle front
   When drain all of engine coolant in the system, open water drain plug on cylinder block. Refer to EM-76 .
   CAUTION:
   - **Perform this step when engine is cold.**
   - **Do not spill engine coolant on drive belt.**

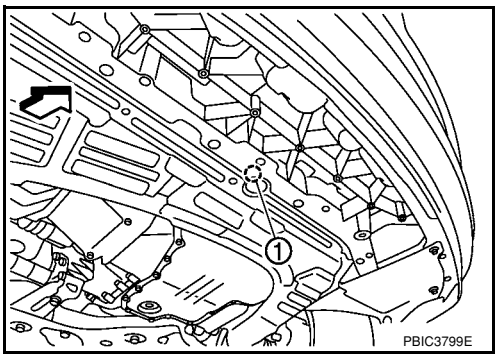

2. Remove reservoir tank as necessary, and drain engine coolant and clean reservoir tank before installing. Refer to CO-11 .
3. Check drained engine coolant for contaminants such as rust, corrosion or discoloration.
   If contaminated, flush the engine cooling system. Refer to "FLUSHING COOLING SYSTEM" .

REFILLING ENGINE COOLANT

1. Install reservoir tank if removed. Refer to CO-11 .
2. Install radiator drain plug.
   - **If water drain plug on cylinder block is removed, close and tighten it. Refer to EM-76 .**

   CAUTION:
   Be sure to clean radiator drain plug and install with new O-ring. Refer to CO-11, "Component" .
3. Make sure that each hose clamp has been firmly tightened.
4. Remove air duct assembly. Refer to EM-16 .
5. Disconnect heater hose (1) at position (⬅) as shown.
   - ⇦ Front
   - Enhance heater hose as high as possible.

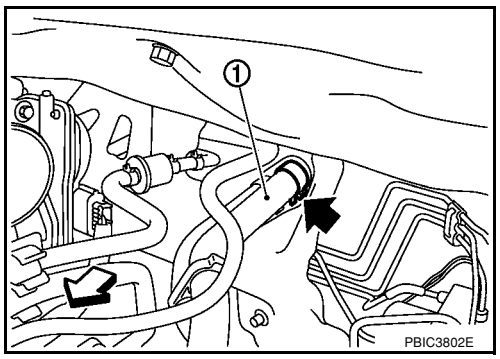

6. Fill radiator and reservoir tank to specified level.
   - **Pour engine coolant through engine coolant filler neck slowly of less than 2 ℓ (2 1/8 US qt, 1-3/4 Imp qt) a minute to allow air in system to escape.**
   - **Use NISSAN Genuine Engine Coolant or equivalent mixed with water (distilled or demineralized). Fill cooling system to specification. Refer to MA-10.**
   - When engine coolant overflows disconnected heater hose, connect heater hose, and continue filling the engine coolant, if heater hose is disconnected.

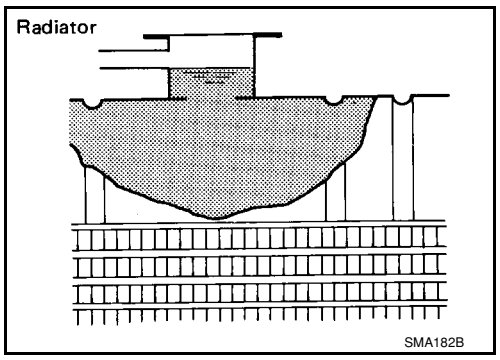

7. Install radiator cap.
8. Install air duct assembly. Refer to EM-16 .
9. Warm up until opening thermostat. Standard for warming-up time is approximately 10 minutes at 3,000 rpm.
   - Make sure thermostat opening condition by touching radiator hose (lower) to see a flow of warm water.

   CAUTION:
   Watch water temperature gauge so as not to overheat the engine.
10. Stop engine and cool down to less than approximately 50°C (122°F).
    - Cool down using fan to reduce the time.
    - If necessary, refill radiator up to filler neck with engine coolant.
11. Refill reservoir tank to “MAX” level line with engine coolant.
12. Repeat steps 6 through 10 two or more times with radiator cap installed until engine coolant level no longer drops.
13. Check cooling system for leaks with engine running.
14. Warm up engine, and check for sound of engine coolant flow while running engine from idle up to 3,000 rpm with heater temperature controller set at several position between “COOL” and “WARM”.
    - Sound may be noticeable at heater unit.
15. Repeat step 14 three times.
16. If sound is heard, bleed air from cooling system by repeating steps 6 through 10 until engine coolant level no longer drops.

FLUSHING COOLING SYSTEM

1. Install reservoir tank if removed. Refer to CO-11 .
2. Install radiator drain plug.
   - **If water drain plug on cylinder block is removed, close and tighten it. Refer to EM-76 .**

   CAUTION:
   Be sure to clean radiator drain plug and install with new O-ring. Refer to CO-11, "Component" .
3. Fill radiator and reservoir tank with water and reinstall radiator cap.
4. Run engine and warm it up to normal operating temperature.
5. Rev engine two or three times under no-load.
6. Stop engine and wait until it cools down.
7. Drain water from the cooling system. Refer to "DRAINING ENGINE COOLANT" .
8. Repeat steps 1 through 7 until clear water begins to drain from radiator.

Inspection

INFOID:0000000001704732

LEVEL CHECK

- Check if the reservoir tank engine coolant level is within the “MIN” to “MAX” range when engine is cool.
- Adjust the engine coolant level as necessary.

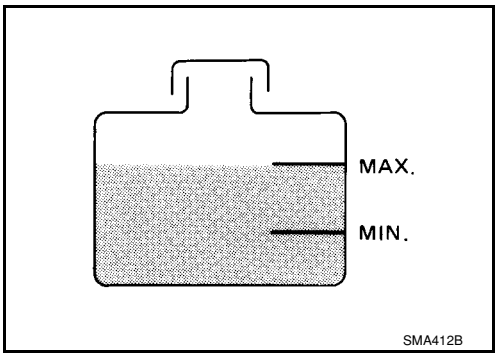

CHECKING COOLING SYSTEM FOR LEAKS

To check for leaks, apply pressure to the cooling system using Tool.

Tool number : EG17650301 (J-33984-A)

Testing pressure : 157 kPa (1.6 kg/cm^2 , 23 psi)

WARNING:
Never remove the radiator cap when the engine is hot. Serious burns could occur from high pressure coolant escaping from the radiator.

CAUTION:
Higher pressure than specified may cause radiator damage.

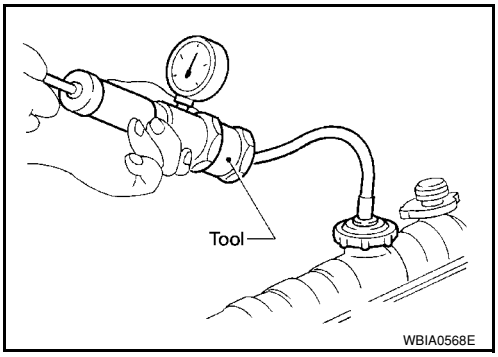

Checking Fuel Line

INFOID:0000000001704733

Inspect fuel lines, fuel filler cap and fuel tank for improper attachment, leaks, cracks, damage, loose connections, chafing or deterioration.
If necessary, repair or replace damaged parts.

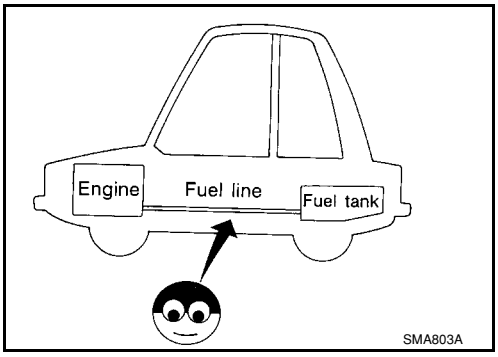

Changing Air Cleaner Filter

INFOID:0000000001704734

REMOVAL

1. Push the tabs (A) of both ends of the air cleaner cover (1) into the inside (B).
2. Pull up the air cleaner cover forward (C) and remove it.

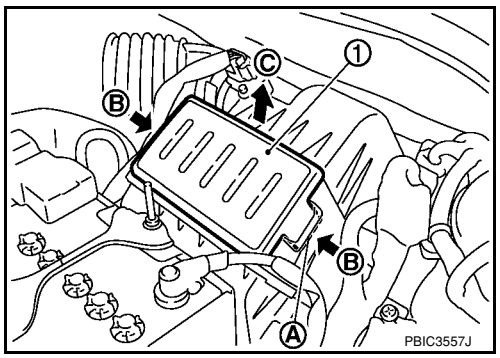

3. Remove the air cleaner filter (1) and holder (2) assembly from the air cleaner case.
4. Remove the air cleaner filter from the holder.

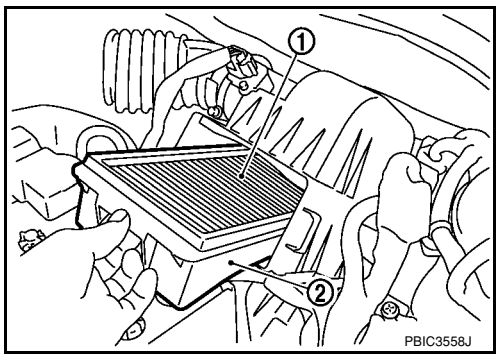

INSPECTION AFTER REMOVAL

It is necessary to clean air cleaner filter or replace it at the recommended intervals, more often under dusty driving conditions. Refer to MA-6 .

- Blow air into the back side of air cleaner filter until no any object sprays out.

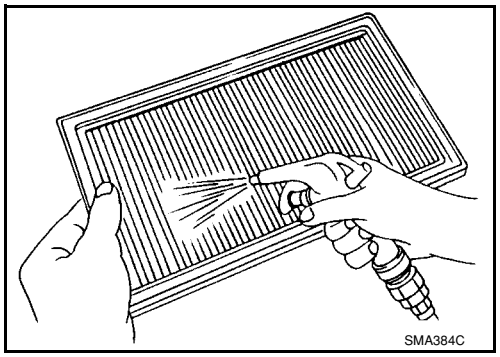

INSTALLATION

Note the following, and install in the reverse order of removal.

- Install the air cleaner cover (1) in the direction shown in the figure.
- Air cleaner filter (2)
- Holder (3)

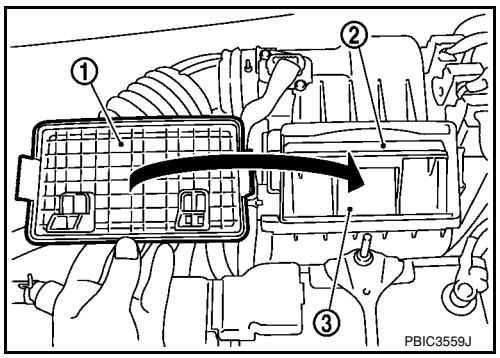

Changing Engine Oil

INFOID:0000000001704735

WARNING:

- **Be careful not to burn yourself, as engine oil may be hot.**
- **Prolonged and repeated contact with used engine oil may cause skin cancer; try to avoid direct skin contact with used engine oil. If skin contact is made, wash thoroughly with soap or hand cleaner as soon as possible.**

1. Warm up engine, park vehicle on a level surface and check for engine oil leakage from engine components. Refer to LU-6, "Inspection" .
2. Stop engine and wait for 10 minutes.
3. Loosen oil filler cap (1) and then remove drain plug (2).
   - Oil filter (3)
   - ⇦ Vehicle front
4. Drain engine oil.
5. Install drain plug (2) with new washer. Refer to EM-24
   CAUTION:
   Be sure to clean drain plug (2) and install with new washer.
6. Refill with new engine oil. Refer to MA-10.
   CAUTION:
   - **The refill capacity depends on the engine oil temperature and drain time. Use these specifications for reference only.**
   - **Always use oil level gauge to determine the proper amount of engine oil in the engine.**
7. Warm up engine and check area around drain plug (2) and oil filter (3) for engine oil leakage.
8. Stop engine and wait for 10 minutes.
9. Check the engine oil level. Refer to LU-6, "Inspection".

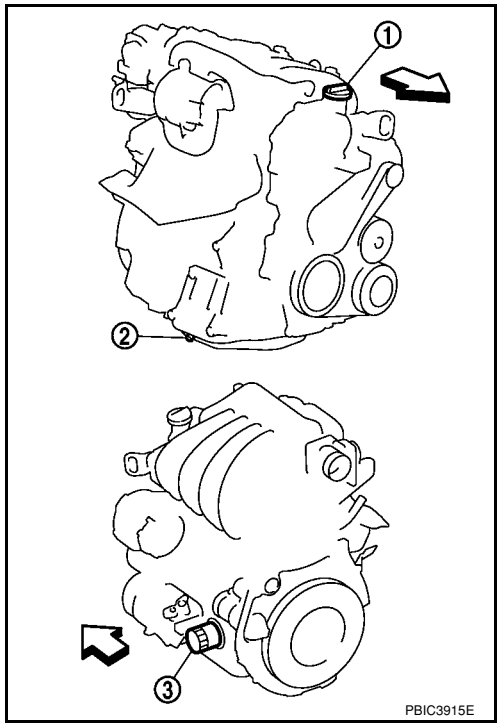

Engine Oil Filter

INFOID:0000000001704736

REMOVAL

1. Remove oil filter using Tool (A).

   Tool number : KV10115801 (J-38956)

   - ⇐ Front

   CAUTION:
   - **Oil filter is provided with relief valve. Use Genuine NISSAN Oil Filter or equivalent.**
   - **Be careful not to get burned when engine and engine oil may be hot.**
   - **When removing, prepare a shop cloth to absorb any engine oil leakage or spillage.**
   - **Do not allow engine oil to adhere to drive belt.**
   - **Completely wipe off any engine oil that adheres to engine and vehicle.**

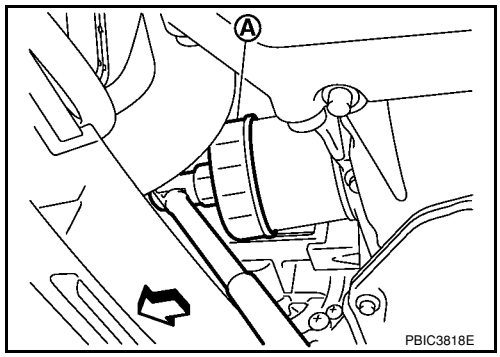

INSTALLATION

1. Remove foreign materials adhering to the oil filter installation surface.
2. Apply new engine oil to the oil seal contact surface of new oil filter.

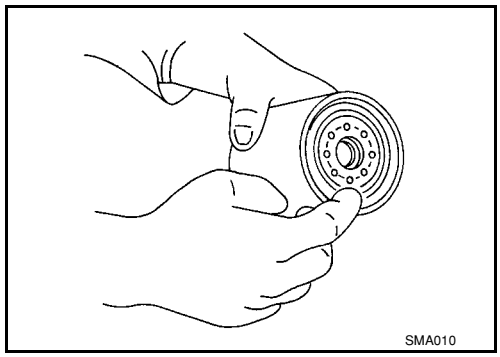

3. Screw oil filter manually until it touches the installation surface, then tighten it by 2/3 turn. Or tighten to specification.

Oil filter: : 17.7 N·m (1.8 kg-m, 13 ft-lb)

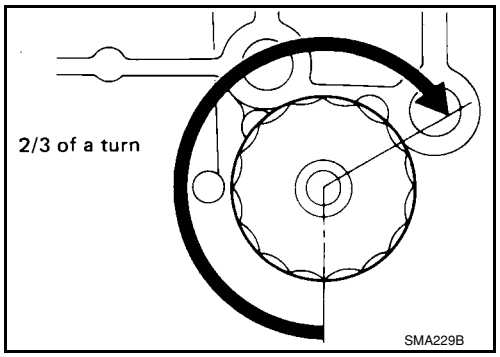

INSPECTION AFTER INSTALLATION

1. Check the engine oil level. Refer to LU-6, "Inspection" .
2. Start engine, and make sure there is no leaks of engine oil.
3. Stop engine and wait for 10 minutes.
4. Check the engine oil level and adjust engine oil. Refer to LU-6, "Inspection" .

Changing Spark Plugs

INFOID:0000000001704737

1. Remove intake manifold. Refer to EM-18 .
2. Remove ignition coil.
   CAUTION:
   - **Handle ignition coil carefully and avoid impacts.**
   - **Never disassemble.**
3. Remove spark plug using suitable tool.
   CAUTION:
   Never drop or shock it.

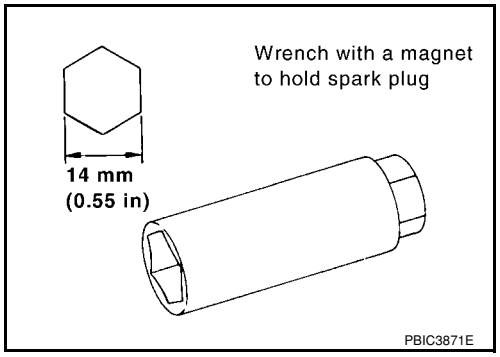

INSPECTION AFTER REMOVAL

CAUTION:
- **Never drop or shock spark plug.**
- **Checking and adjusting spark plug gap is not required between change intervals.**

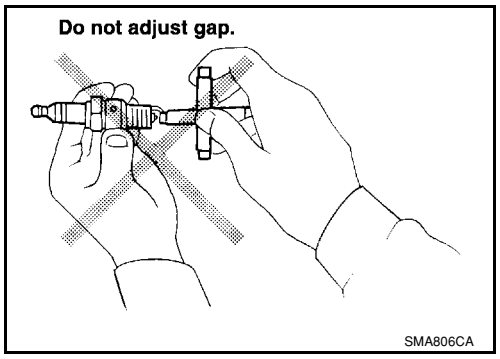

- **If spark plug tip is covered with carbon, a spark plug cleaner may be used.**

Cleaner air pressure	**: Less than 588 kPa (5.88 bar, 6 kg/cm^2, 85 psi)**
Cleaning time	**: Less than 20 seconds**

- **Never use wire brush for cleaning spark plug.**

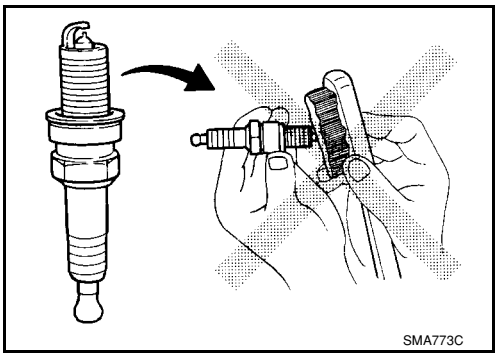

INSTALLATION

1. Install spark plug using suitable tool.

Plug type	**: Iridium tipped**
Make	**: DENSO**
Part number	**: FXE20HR11**
Gap (nominal)	**: 1.1 mm (0.043 in)**

CAUTION:
Never drop or shock spark plug.

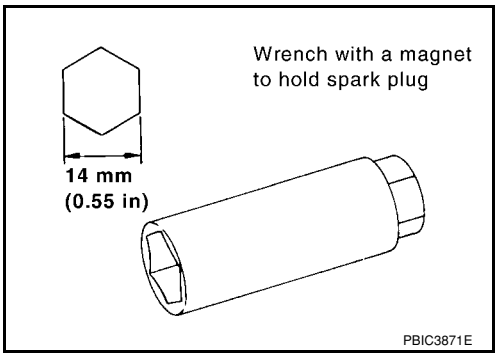

2. Install ignition coil.
   CAUTION:
   - **Handle ignition coil carefully and avoid impacts.**
   - **Never disassemble ignition coil.**
3. Install intake manifold. Refer to EM-18.

Checking EVAP Vapor Line

INFOID:0000000001704738

1. Visually inspect EVAP vapor lines for improper attachment and for cracks, damage, loose connections, chafing and deterioration.
2. Inspect fuel tank filler cap vacuum relief valve for clogging, sticking, etc.
   Refer to "Checking EVAP Vapor Lines"

CHASSIS AND BODY MAINTENANCE

Changing In-cabin Microfilter

INFOID:0000000001704739

1. Remove the glove box assembly. Refer to IP-10 .
2. Compress the air conditioner filter (1) downward while sliding it to the RH side of the vehicle to release the upper pawl.
3. Move the bottom of air conditioner filter (1) upward as shown to release the bottom tab, then remove it.
4. Replace the air conditioner filter with new one and install the new filter in the A/C unit assembly.
   CAUTION:
   Make sure that the air conditioner filter lower tab is fully seated, and that the air conditioner upper pawl is locked into place securing the new filter into the A/C unit assembly.

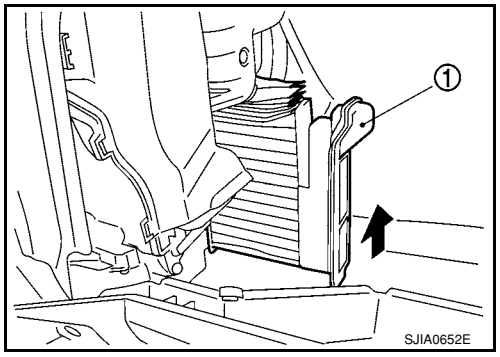

Checking Exhaust System

INFOID:0000000001704740

Check the exhaust pipes, muffler, and exhaust mounts for improper attachment, leaks, cracks, damage, chafing, or deterioration.

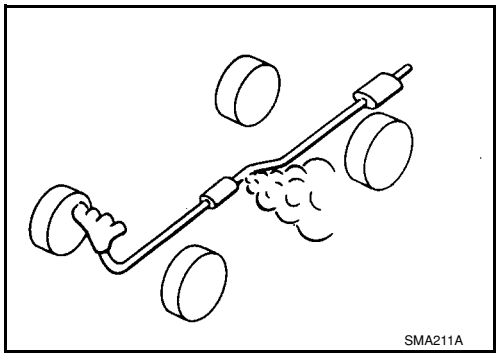

Checking CVT Fluid

INFOID:0000000001704741

FLUID LEVEL CHECK

Fluid level should be checked with the fluid warmed up to 50 to 80°C (122 to 176°F).

1. Check for fluid leakage.
2. With the engine warmed up, drive the vehicle to warm up the CVT fluid. When ambient temperature is 20°C (68°F), it takes about 10 minutes for the CVT fluid to warm up to 50 to 80°C (122 to 176°F).
3. Park the vehicle on a level surface and set the parking brake.
4. With engine at idle, while depressing brake pedal, move the selector lever throughout the entire shift range and return it to the “P” position.

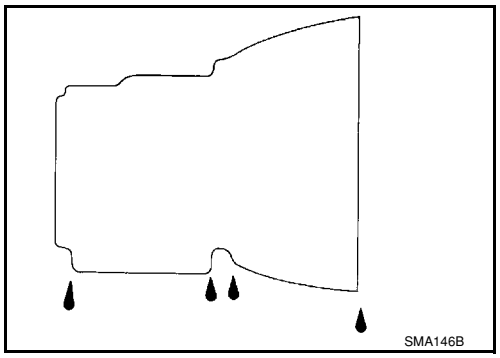

5. Press the tab on the CVT fluid level gauge to release the lock and pull out the CVT fluid level gauge from the CVT fluid charging pipe.

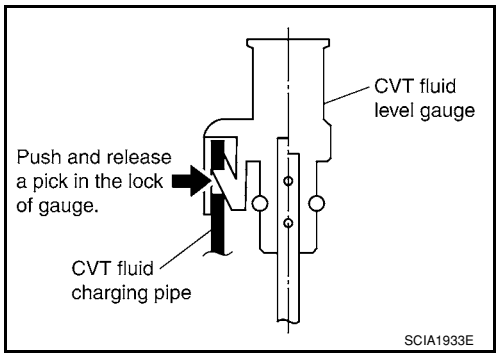

6. Wipe fluid off the CVT fluid level gauge. Then rotate the CVT fluid level gauge 180° and re-insert it into the CVT charging pipe as far as it will go.
   CAUTION:
   Always use lint free paper towels to wipe fluid off the CVT fluid level gauge.

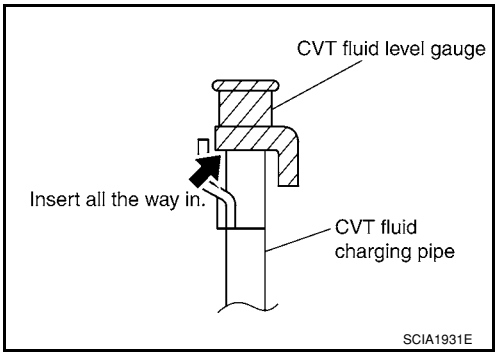

7. Remove the CVT fluid level gauge and check that the fluid level is within the specified range as shown. If the fluid level is at or below the low side of the range, add the necessary specified NISSAN CVT fluid through the CVT charging pipe.

   Fluid grade: **Refer to MA-10, "Fluids and Lubricants".**

   CAUTION:
   - **Only use specified NISSAN CVT fluid.**
   - **Do not overfill the CVT.**

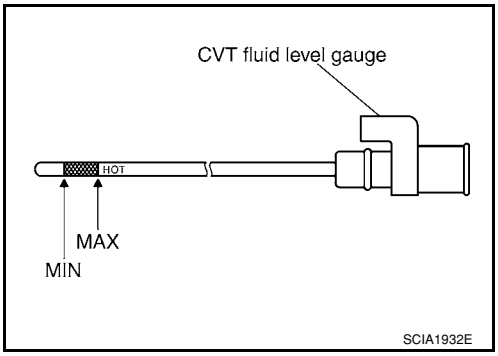

8. Install the CVT fluid level gauge to the CVT fluid charging pipe until it locks.
   CAUTION:
   When CVT fluid level gauge is installed into the CVT fluid charging pipe, make sure that the CVT fluid level gauge is securely locked in place.

FLUID CONDITION CHECK

Fluid status	Conceivable cause	Required operation
Varnished (viscous varnish state)	Clutch, brake scorched	Replace the CVT fluid and check the CVT main unit and the vehicle for malfunctions (wire harness, cooler pipes, etc.)
Milky white or cloudy	Water in the fluid	Replace the CVT fluid and check for places where water is getting in.
Large amount of metal powder mixed in fluid	Unusual wear of sliding parts within CVT	Replace the CVT fluid and check for improper operation of the CVT.

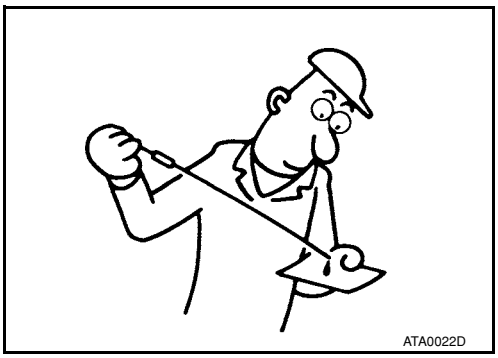

Changing CVT Fluid

INFOID:0000000001704742

1. Warm up CVT fluid by driving the vehicle for 10 minutes.

- ⇦: Vehicle front
- Radiator (2)
- CVT fluid cooler hose [inlet side (3)]
- Transaxle assembly (4)

2. Drain CVT fluid from CVT fluid cooler hose [outlet side (1)] and refill with new specified NISSAN CVT fluid in the CVT fluid charging pipe with the engine running at idle speed.

   Fluid capacity and grade: **Refer to MA-10, "Fluids and Lubricants".**

   CAUTION:
   Only use the specified NISSAN CVT fluid.

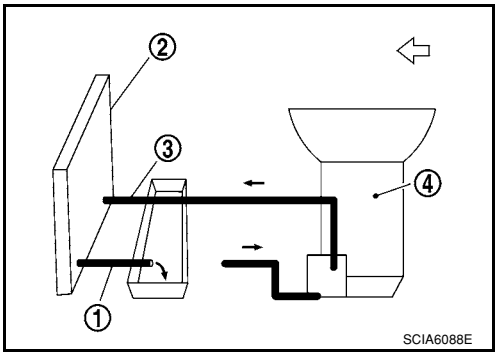

3. Refill until new CVT fluid comes out from CVT fluid cooler hose [outlet side (1)].

NOTE:
About 30 to 50% extra fluid will be required for this procedure.

4. Check fluid level and condition. Refer to MA-19, "Checking CVT Fluid" .
   CAUTION:
   Delete CVT fluid deterioration date with CONSULT-II after changing CVT fluid. Refer to CVT-47, "CONSULT-III Function (TRANSMISSION)" .

Checking Clutch Fluid Level and Leaks

INFOID:0000000001704743

If fluid level is extremely low, check clutch system for leaks.

Checking Clutch System

INFOID:0000000001704744

Check fluid lines and operating cylinder for improper attachment, cracks, damage, loose connections, chafing and deterioration.

Checking M/T Oil

INFOID:0000000001704745

OIL LEAKAGE AND OIL LEVEL

1. Make sure that oil is not leaking from transaxle or around it.
2. Remove filler plug (1) and check oil level at filler plug hole as shown.
   CAUTION:
   Do not start engine while checking oil level
3. Install a new gasket onto filler plug (1) and install it into transaxle. Tighten filler plug to specification. Refer to MT-17, "Disassembly and Assembly" .
   CAUTION:
   Do not reuse gasket.

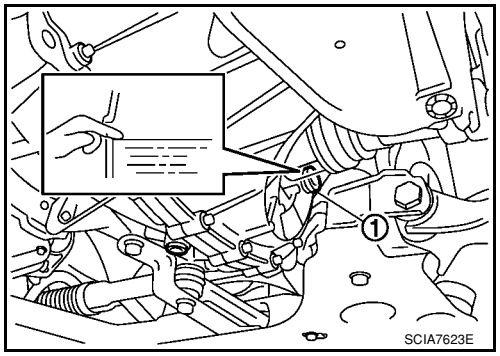

Changing M/T Oil

INFOID:0000000001704746

DRAINING

1. Start engine and let it run to warm up transaxle.
2. Stop engine. Remove drain plug (1) and drain oil.
3. Install a new gasket onto drain plug (1) and install it into transaxle. Tighten drain plug to specification. Refer to MT-17, "Disassembly and Assembly" .
   CAUTION:
   Do not reuse gasket.

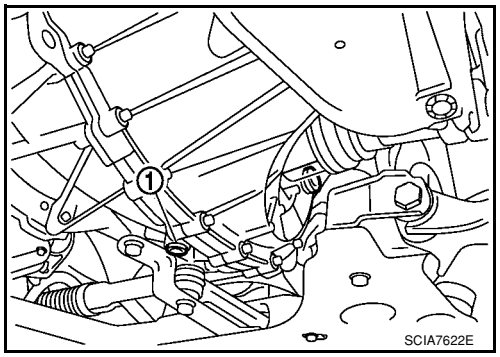

FILLING

1. Remove filler plug (1). Fill with new oil until oil level reaches the specified limit at filler plug hole as shown.

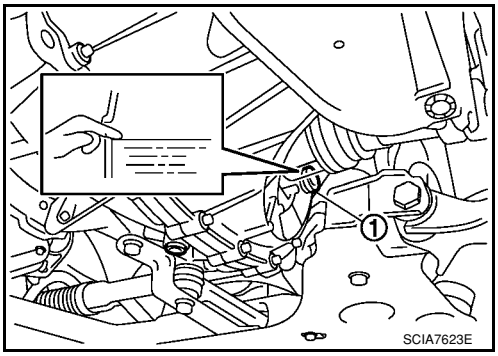

Oil grade and capacity

: Refer to MA-10, "Fluids and Lubricants"

2. After refilling oil, check oil level. Install a new gasket on filler plug (1), then install it into transaxle. Tighten filler plug to specification. Refer to MT-17, "Disassembly and Assembly" .
CAUTION:
Do not reuse gasket.

Checking A/T Fluid

INFOID:0000000001704747

1. Warm up engine.
2. Check for A/T fluid leakage.
3. Before driving, A/T fluid level can be checked at A/T fluid temperatures of 30 to 50°C (86 to 122°F) using the “COLD” range on A/T fluid level gauge.

a. Park vehicle on level surface and set parking brake.
b. Start engine and move selector lever through each gear position. Leave selector lever in “P” position.
c. Check A/T fluid level with engine idling.

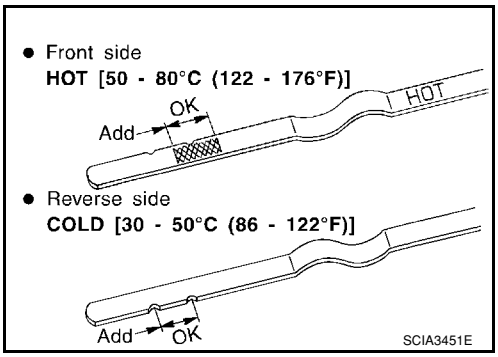

d. Remove A/T fluid level gauge and wipe clean with lint-free cloth.
CAUTION:
When wiping the A/T fluid level gauge, always use lint-free cloth.
e. Re-insert A/T fluid level gauge into A/T fluid charging pipe as far as it will go.
CAUTION:
Firmly fix the A/T fluid level gauge to the A/T fluid charging pipe using the stopper attached.
f. Remove A/T fluid level gauge and note reading. If reading is at low side of range, add A/T fluid to the A/T fluid charging pipe.
CAUTION:
Do not overfill.

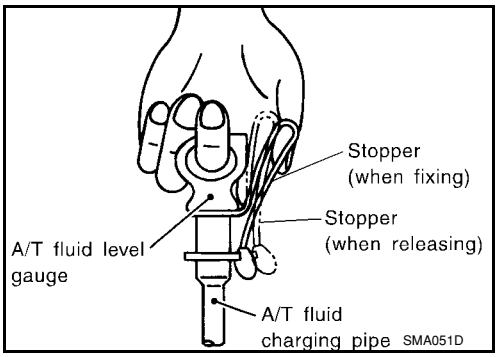

4. Drive vehicle for approximately 5 minutes.
5. Re-check A/T fluid level at A/T fluid temperatures of 50 to 80°C (122 to 176°F) using “HOT” range on A/T fluid level gauge.
CAUTION:
- **When wiping the A/T fluid level gauge, always use lint-free cloth.**
- **Firmly fix the A/T fluid level gauge to the A/T fluid charging pipe using the stopper attached.**
6. Check A/T fluid condition and make any necessary repairs. Refer to AT-48, "Inspections Before Trouble Diagnosis" . If the A/T fluid contains frictional material (clutches, bands, etc.), or if the A/T is repaired, overhauled, or replaced, inspect and clean the A/T fluid cooler mounted in the radiator. Refer to AT-16, "A/T Fluid Cooler Cleaning" .
7. Install the removed A/T fluid level gauge into the A/T fluid charging pipe.
CAUTION:
Firmly fix the A/T fluid level gauge to the A/T fluid charging pipe using the stopper attached.

Changing A/T Fluid

INFOID:0000000001704748

1. Warm up A/T fluid.

2. Stop engine.
3. Drain A/T fluid by removing the drain plug. Reinstall the drain plug to the specified torque.
   CAUTION:
   Do not reuse drain plug gasket.

   Drain plug: **Refer to AT-230, "Component" .**
4. Refill the transaxle with new specified A/T fluid through the A/T fluid charging pipe. Always refill the transaxle with the same volume of A/T fluid that was drained out.

   Fluid grade and capacity: **Refer to MA-10 .**
5. Run engine at idle speed for 5 minutes.
6. Check A/T fluid level and condition. Refer to MA-22, "Checking A/T Fluid" .

Balancing Wheels

INFOID:0000000001704749

Adjust wheel balance using road wheel center.

CAUTION:
- **Be careful not to scratch the road wheel during removal.**
- **Use clip-on type wheel balance weights only.**

Wheel balance (Maximum allowable unbalance):

Maximum allowable unbalance	Dynamic (At rim flange)	Less than 5 g (0.18 oz) (one side)
	Static (At rim flange)	Less than 10 g (0.35 oz)

Rotation

INFOID:0000000001704750

- Follow the maintenance schedule for tire rotation service intervals. Refer to MA-6.
- Do not include the T-type spare tire when rotating tires.
  CAUTION:
  - **When installing wheels, tighten them diagonally by dividing the work two to three times in order to prevent the wheels from developing any distortion.**
  - **Be careful not to tighten wheel nut at torque exceeding the specification to prevent damage of disc rotor.**

  Wheel nut : 113 N·m (12 kg-m, 83 ft-lb)

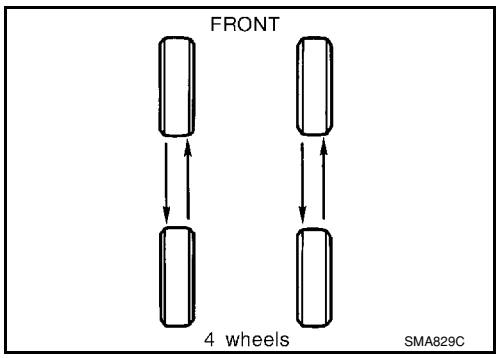

Checking Brake Fluid Level and Leaks

INFOID:0000000001704751

- If fluid level is extremely low, check brake system for leaks.

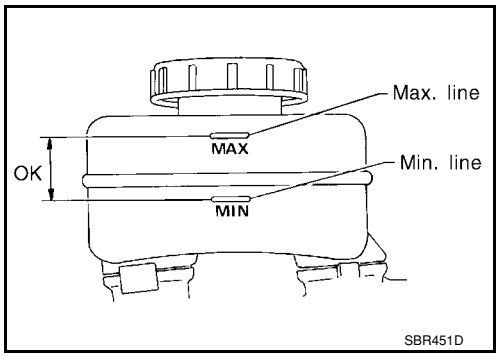

Checking Brake Line and Cables

INFOID:0000000001704752

- Check brake fluid lines and parking brake cables for improper attachment, leaks, chafing, abrasions, deterioration, etc.

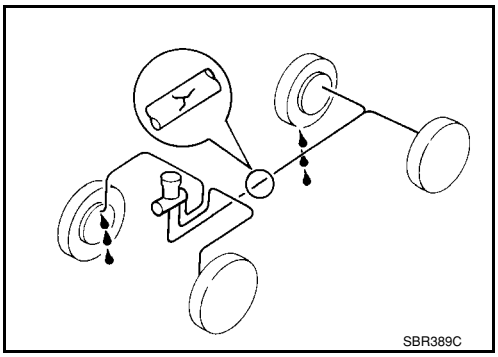

Changing Brake Fluid

INFOID:0000000001704753

1. Drain brake fluid from each bleed valve.
2. Refill until new brake fluid comes out from each bleed valve.
   Use same procedure as in bleeding hydraulic system to refill brake fluid.
   Refer to BR-8, "Bleeding Brake System" .
   - Refill with recommended Genuine Brake Fluid or equivalent DOT 3 (US FMVSS No. 116).
     Refer to MA-10 .
   - Never reuse drained brake fluid.
   - Be careful not to splash brake fluid on painted areas.

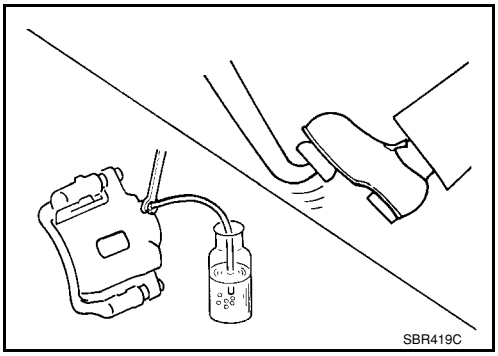

Checking Disc Brake

INFOID:0000000001704754

ROTOR

Check the rotor condition and thickness. Resurface or replace the rotor as necessary.

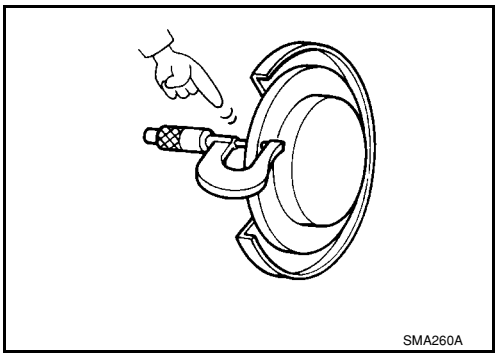

CALIPER

Check the caliper for leakage.

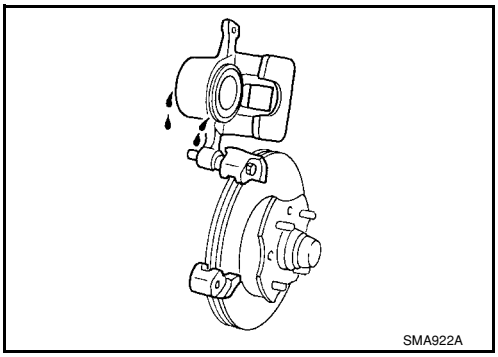

PAD

Check the brake pads for wear or damage. Refer to BR-32, "Disassembly and Assembly of Wheel Cylinder" .

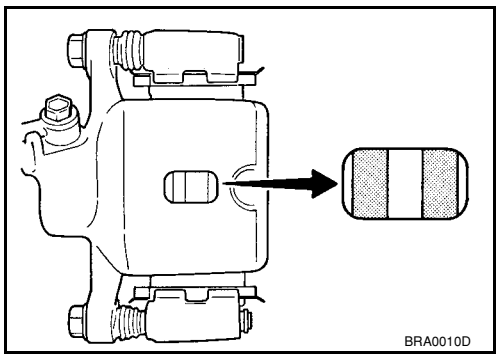

WHEEL CYLINDER

Check for leakage.

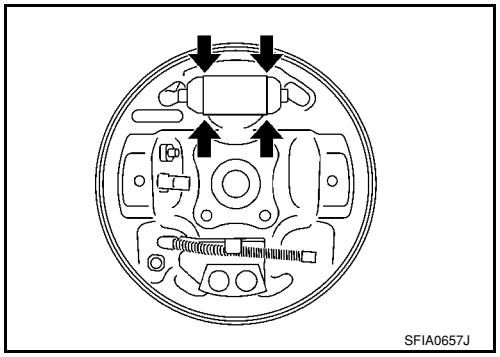

LINING

Check for lining thickness (A). Refer to BR-32, "Disassembly and Assembly of Wheel Cylinder" .

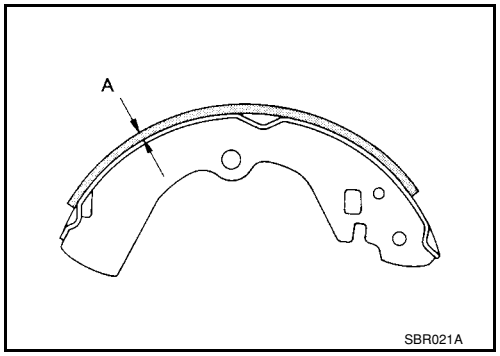

Axle and Suspension Parts

INFOID:0000000001704755

Check front and rear axle and suspension parts for excessive play, cracks, wear or other damage.

- Shake each wheel to check for excessive play.
- Check wheel bearings for smooth operation.
- Check axle and suspension nuts and bolts for looseness.
- Check strut (shock absorber) for oil leakage or other damage.
- Check suspension ball joint for grease leakage and ball joint dust cover for cracks or other damage.

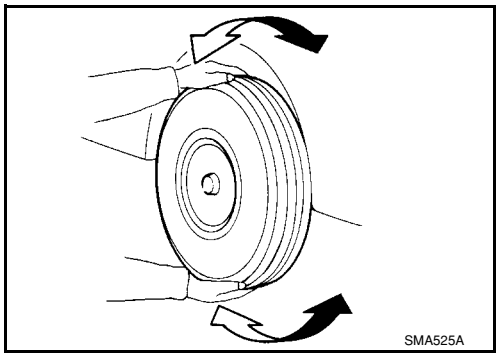

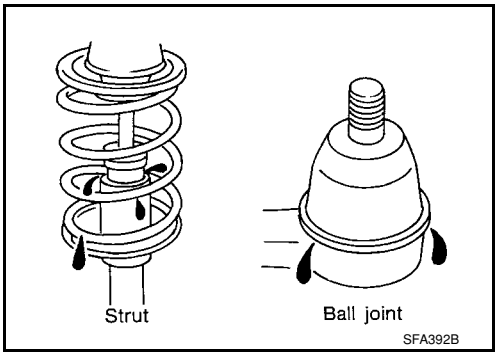

Drive Shaft

INFOID:0000000001704756

Check boot and drive shaft for cracks, wear, damage and grease leakage.

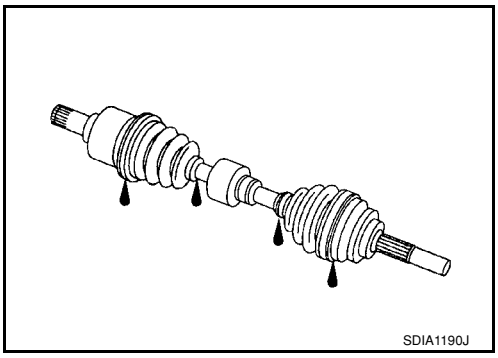

Lubricating Locks, Hinges and Hood Latch

INFOID:0000000001704757

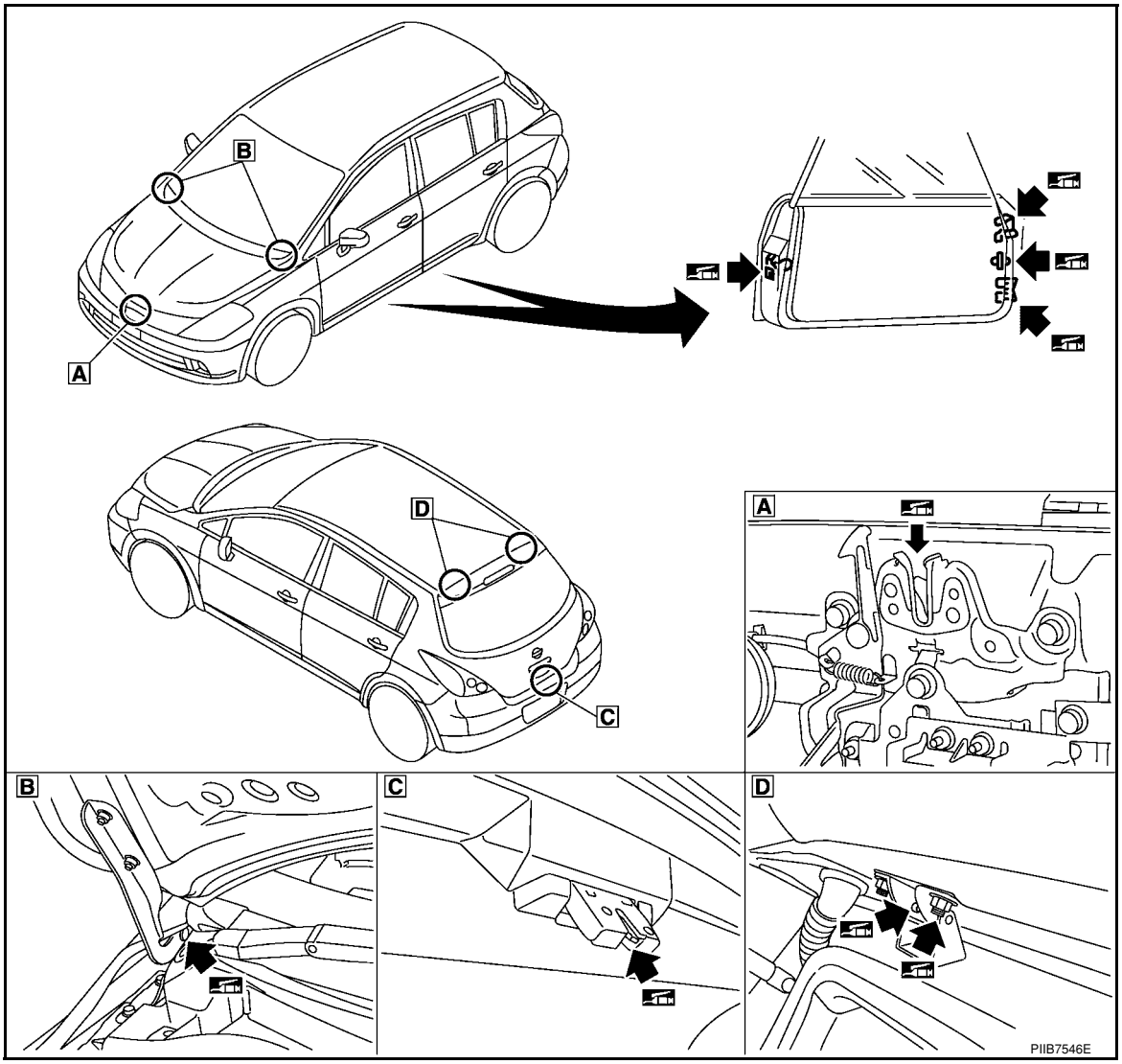

Checking Seat Belts, Buckles, Retractors, Anchors and Adjusters

INFOID:0000000001704758

Check the seat belt buckles, webbing, retractors, anchors and adjusters. Replace any seat belt assembly as necessary. Refer to SB-7, "Seat Belt Inspection" .

- Check the seat belt anchors for loose bolts, damage, or excessive wear.
- Check the seat belt webbing for any damage, cuts, fraying, or excessive wear.
- Check the retractor for smooth operation.
- Check the function of the buckles by inserting the seat belt tongue and checking for proper engagement of the buckle and press the button on the buckle to check for proper release of the seat belt tongue.

CAUTION:

- **After any collision, inspect all seat belt assemblies, including retractors and other attached components, such as the guide rail set. NISSAN recommends replacing all seat belt assemblies in use during a collision, unless they are not damaged and are inspected to confirm they are operating properly after a minor collision.**
  Also inspect all seat belt assemblies that are not in use during a collision, and replace any components if damaged or not operating properly. The seat belt pre-tensioner should be replaced even if the seat belts are not in use during a frontal collision where the driver and passenger air bags have been deployed.
- **If any component of the seat belt assembly is suspected of being damaged or not operating properly, do not repair the component. Replace the components as an assembly.**
- **If the seat belt webbing is cut, frayed, or damaged then replace the seat belt assembly.**
- **Never lubricate the seat belt buckle or tongue.**

- **When replacing any seat belt assembly always use a Genuine NISSAN seat belt assembly.**

SECTION MT
MANUAL TRANSAXLE

CONTENTS

SERVICE INFORMATION 2

PRECAUTIONS 2
Precaution for Supplemental Restraint System (SRS) "AIR BAG" and "SEAT BELT PRE-TENSIONER" 2
Precaution for Procedure without Cowl Top Cover..... 2
Precaution 2

PREPARATION 3
Special Service Tool 3
Commercial Service Tool 5

NOISE, VIBRATION AND HARSHNESS (NVH) TROUBLESHOOTING 7
NVH Troubleshooting Chart 7

DESCRIPTION 8
Cross-Sectional View 8

M/T OIL 10
Changing M/T Oil 10
Checking M/T Oil 10

SIDE OIL SEAL 11
Removal and Installation 11

POSITION SWITCH 12
Checking 12

CONTROL LINKAGE 13
Component of Control Device and Cable 13
Removal and Installation 13

AIR BREATHER HOSE 15
Removal and Installation 15

TRANSAXLE ASSEMBLY 16
Removal and Installation 16
Disassembly and Assembly 17

INPUT SHAFT AND GEARS 35
Disassembly and Assembly 35

MAINSHAFT AND GEARS 39
Disassembly and Assembly 39

REVERSE IDLER SHAFT AND GEARS 44
Disassembly and Assembly 44

FINAL DRIVE 46
Disassembly and Assembly 46

SHIFT CONTROL 49
Inspection 49

SERVICE DATA AND SPECIFICATIONS (SDS) 50
General Specification 50

SERVICE INFORMATION

PRECAUTIONS

Precaution for Supplemental Restraint System (SRS) "AIR BAG" and "SEAT BELT PRE-TENSIONER"

INFOID:0000000001703128

The Supplemental Restraint System such as “AIR BAG” and “SEAT BELT PRE-TENSIONER”, used along with a front seat belt, helps to reduce the risk or severity of injury to the driver and front passenger for certain types of collision. This system includes seat belt switch inputs and dual stage front air bag modules. The SRS system uses the seat belt switches to determine the front air bag deployment, and may only deploy one front air bag, depending on the severity of a collision and whether the front occupants are belted or unbelted.
Information necessary to service the system safely is included in the SRS and SB section of this Service Manual.

WARNING:

- **To avoid rendering the SRS inoperative, which could increase the risk of personal injury or death in the event of a collision which would result in air bag inflation, all maintenance must be performed by an authorized NISSAN/INFINITI dealer.**
- **Improper maintenance, including incorrect removal and installation of the SRS, can lead to personal injury caused by unintentional activation of the system. For removal of Spiral Cable and Air Bag Module, see the SRS section.**
- **Do not use electrical test equipment on any circuit related to the SRS unless instructed to in this Service Manual. SRS wiring harnesses can be identified by yellow and/or orange harnesses or harness connectors.**

Precaution for Procedure without Cowl Top Cover

INFOID:0000000001844076

When performing the procedure after removing cowl top cover, cover the lower end of windshield with urethane, etc.

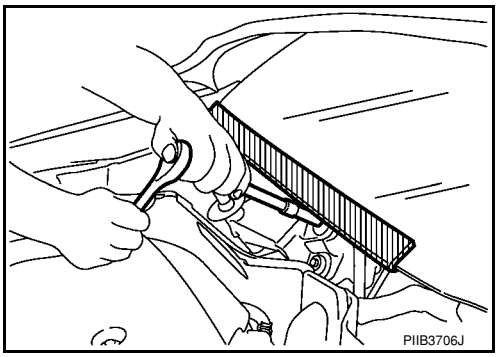

Precaution

INFOID:0000000001703129

- If transaxle assembly is removed from the vehicle, always replace CSC (Concentric Slave Cylinder). Installed CSC returns to the original position when removing transaxle assembly. Dust on clutch disc sliding parts may damage CSC seal, and may cause clutch fluid leakage.
- Do not reuse transaxle oil.
- Drain, fill and check transaxle oil with the vehicle on level surface.
- During removal or installation, keep inside of transaxle clear of dust or dirt.
- Check for the correct installation orientation prior to removal or disassembly. If matching marks are required, be certain they do not interfere with the function of the parts they are applied to.
- In principle, tighten bolts or nuts gradually in several steps working diagonally from inside to outside. If tightening sequence is specified, follow it.
- Be careful not to damage the sliding surfaces and mating surfaces of parts.

PREPARATION

Special Service Tool

INFOID:0000000001703130

The actual shapes of Kent-Moore tools may differ from those of special service tools illustrated here.

Tool number (Kent-Moore No.) Tool name	Description
KV381054S0 (J-34286) Puller 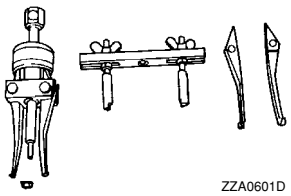 ZZA0601D	Removing mainshaft front bearing outer race
KV38100200 (—) Drift 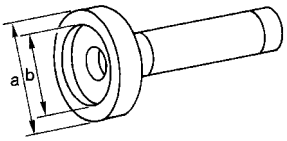 ZZA1143D	• Installing mainshaft front bearing outer race • Installing mainshaft rear bearing outer race • Installing differential side bearing outer race (clutch housing side) **a: 65 mm (2.56 in) dia.** **b: 49 mm (1.93 in) dia**.
ST33220000 (—) Drift 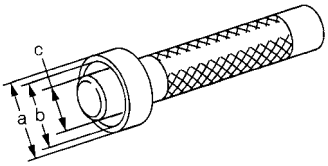 ZZA1046D	Installing input shaft oil seal **a: 37 mm (1.46 in) dia**. **b: 31 mm (1.22 in) dia.** **c: 22 mm (0.87 in) dia.**
ST33400001 (J-26082) Drift 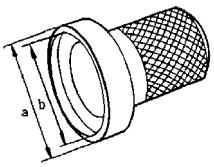 ZZA0814D	Installing differential side bearing outer race (transaxle case side) **a: 60 mm (2.36 in) dia**. **b: 47 mm (1.85 in) dia.**
KV38100300 (J-25523) Drift 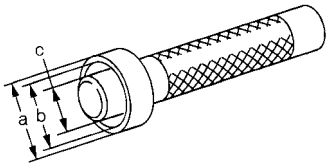 ZZA1046D	Installing differential side oil seal **a: 54 mm (2.13 in) dia**. **b: 46 mm (1.81 in) dia.** **c: 32 mm (1.26 in) dia.**
ST36720030 (—) Drift 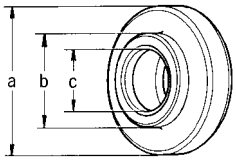 ZZA0978D	• Installing input shaft rear bearing • Installing mainshaft front bearing inner race **a: 70 mm (2.76 in) dia.** **b: 40 mm (1.57 in) dia.** **c: 29 mm (1.14 in) dia.**

Tool number (Kent-Moore No.) Tool name	Description
ST33052000 (—) Drift 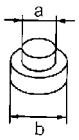 ZZA0969D	• Removing mainshaft rear bearing inner race • Removing 6th main gear • Removing 5th main gear • Removing 4th main gear • Removing 1st main gear • Removing 1st-2nd synchronizer assembly • Removing 2nd main gear • Removing bushing • Removing 3rd main gear • Removing mainshaft front bearing inner race **a: 22 mm (0.87 in) dia.** **b: 28 mm (1.10 in) dia.**
KV32102700 (—) Drift 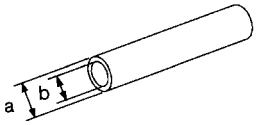 S-NT065	• Installing bushing • Installing 2nd main gear • Installing 3rd main gear • Installing 4th main gear • Installing 5th main gear • Installing 6th main gear **a: 54 mm (2.13 in) dia.** **b: 32 mm (1.26 in) dia.**
ST30901000 (J-26010-01) Drift 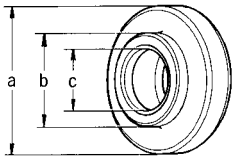 ZZA0978D	Installing mainshaft rear bearing inner race **a: 79 mm (3.11 in) dia.** **b: 45 mm (1.77 in) dia.** **c: 35.2 mm (1.386 in) dia.**
ST33061000 (J-8107-2) Drift 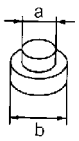 ZZA0969D	Removing differential side bearing inner race (clutch housing side) **a: 28.5 mm (1.122 in) dia.** **b: 38 mm (1.50 in) dia.**

Commercial Service Tool

INFOID:0000000001703131

Tool name	Description
Socket 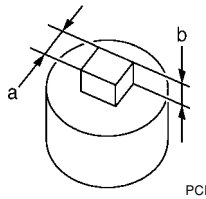 PCIB1776E	Removing and installing drain plug **a: 8 mm (0.31 in)** **b: 5 mm (0.20 in)**
Spacer 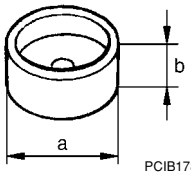 PCIB1780E	Removing mainshaft front bearing outer race **a: 25 mm (0.98 in) dia.** **b: 25 mm (0.98 in)**
Drift 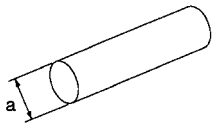 S-NT063	• Installing bushing • Installing shift lever oil seal • Installing control lever oil seal **a: 17 mm (0.67 in) dia.**
Drift 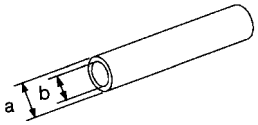 S-NT065	Installing input shaft front bearing **a: 35 mm (1.38 in) dia.** **b: 25 mm (0.98 in) dia.**
Drift 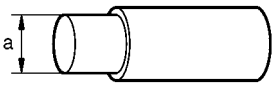 PCIB1779E	Removing input shaft rear bearing **a: 24 mm (0.94 in) dia.**
Drift 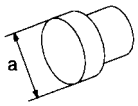 NT109	• Removing differential side bearing inner race (transaxle case side) • Installing input shaft rear bearing **a: 43 mm (1.69 in) dia**.

Tool name	Description
Drift 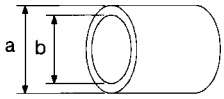 S-NT474	Installing differential side bearing inner race (clutch housing side) **a: 45 mm (1.77 in) dia.** **b: 39 mm (1.54 in) dia**.
Drift 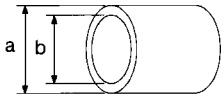 S-NT474	Installing differential side bearing inner race (transaxle case side) **a: 52 mm (2.05 in) dia.** **b: 45 mm (1.77 in) dia.**
Power tool 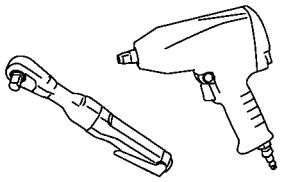 PBIC0190E	• Loosening bolts and nuts

NOISE, VIBRATION AND HARSHNESS (NVH) TROUBLESHOOTING

NVH Troubleshooting Chart

INFOID:0000000001703132

Use the chart below to help you find the cause of the symptom. The numbers indicate the order of the inspection. If necessary, repair or replace these parts.

Reference page		MA-21			MT-17		MT-17	MT-13	MT-17	MT-17			
SUSPECTED PARTS (Possible cause)		OIL (Oil level is low.)	OIL (Wrong oil.)	OIL (Oil level is high.)	GASKET (Damaged)	OIL SEAL (Worn or damaged)	O-RING (Worn or damaged)	SHIFT CONTROL LINKAGE (Worn)	SHIFT FORK (Worn)	GEAR (Worn or damaged)	BEARING (Worn or damaged)	BAULK RING (Worn or damaged)	INSERT SPRING (Damaged)
Symptoms	Noise	1	2							3	3		
	Oil leakage		3	1	2	2	2						
	Hard to shift or will not shift		1	1				2				3	3
	Jumps out of gear							1	3	3			

DESCRIPTION

Cross-Sectional View

INFOID:0000000001703133

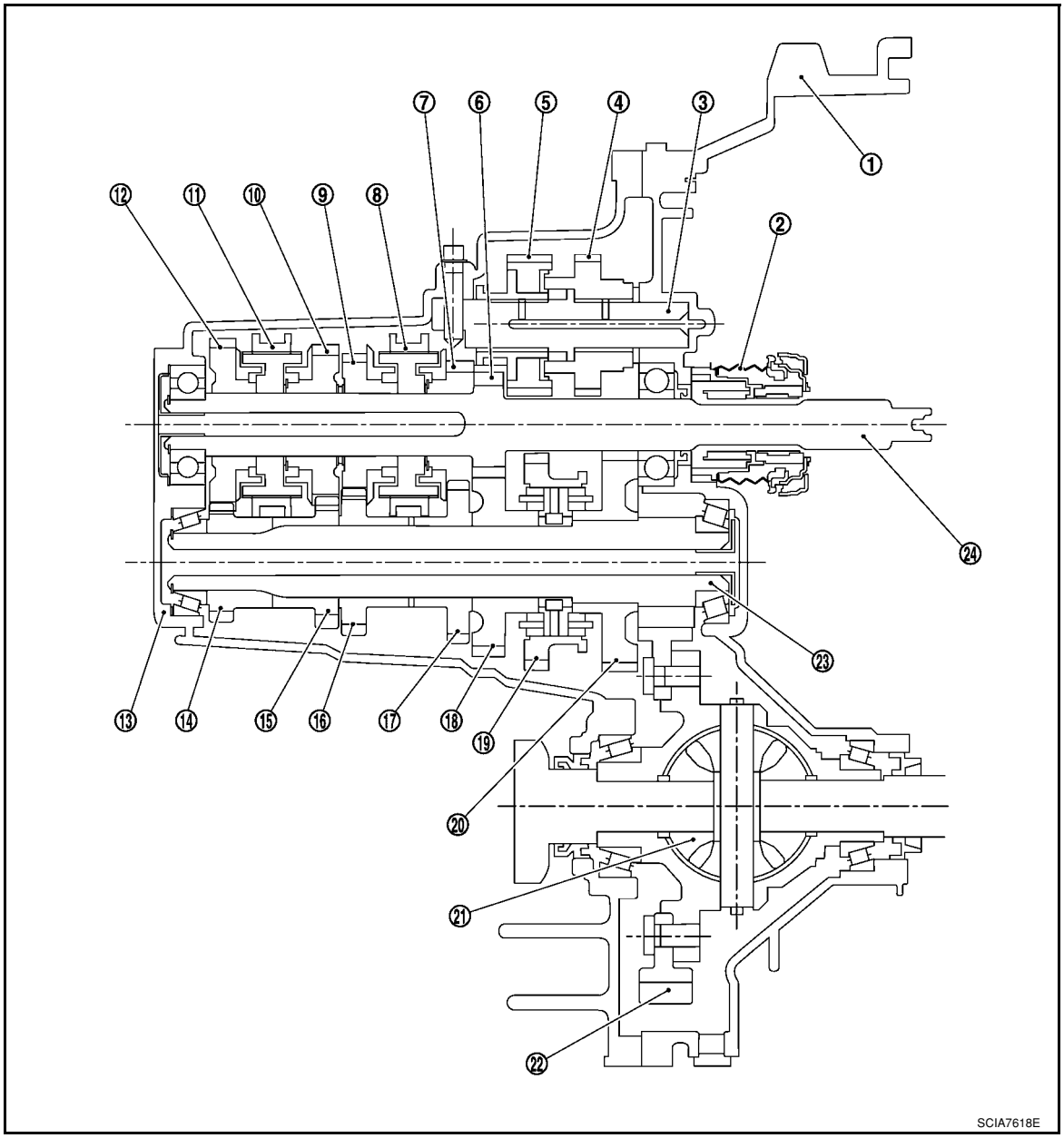

1. Clutch housing	2. CSC (Concentric Slave Cylinder)	3. Reverse idler shaft
4. Reverse input gear	5. Reverse output gear	6. 2nd input gear
7. 3rd input gear	8. 3rd-4th synchronizer assembly	9. 4th input gear
10. 5th input gear	11. 5th-6th synchronizer assembly	12. 6th input gear
13. Transaxle case	14. 6th main gear	15. 5th main gear
16. 4th main gear	17. 3rd main gear	18. 2nd main gear
19. 1st-2nd synchronizer assembly	20. 1st main gear	21. Differential assembly
22. Final gear	23. Mainshaft	24. Input shaft

TRIPLE-CONE SYNCHRONIZER

Triple-cone synchronizer is used for the 1st and the 2nd gears to reduce operating force of the shift lever.

- 1st main gear (1)
- 1st-2nd coupling sleeve (2)
- Insert key (3)
- Outer baulk ring (4)
- 2nd main gear (5)
- Synchronizer cone (6)
- Inner baulk ring (7)
- 1st-2nd synchronizer hub (8)

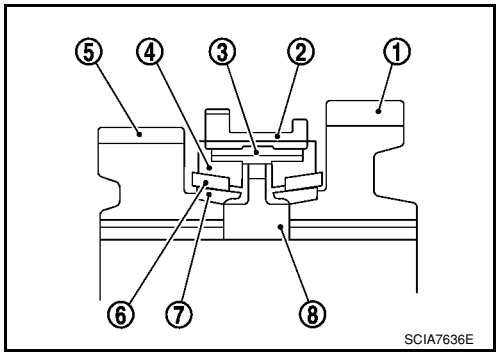

REVERSE GEAR NOISE PREVENTION FUNCTION (SYNCHRONIZING METHOD)

Reverse gear assembly consists of reverse input gear, return spring, reverse baulk ring and reverse output gear. When the shift lever is shifted to the reverse position, the construction allows smooth shift operation by stopping the reverse idler shaft rotation by frictional force of synchronizer.

- Reverse fork rod (1)
- Reverse output gear (2)
- Return spring (3)
- Reverse baulk ring (4)
- Reverse input gear (5)

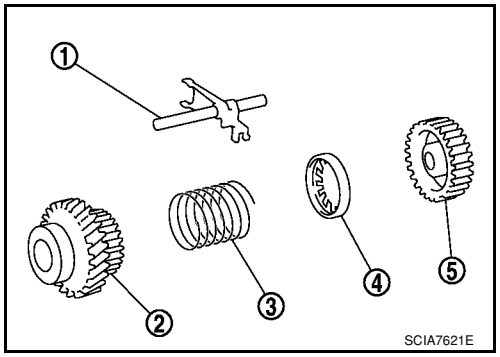

M/T OIL

Changing M/T Oil

INFOID:0000000001703134

DRAINING

1. Start engine and let it run to warm up transaxle.
2. Stop engine. Remove drain plug (1) and drain oil.
3. Install a new gasket onto drain plug (1) and install it into transaxle. Tighten drain plug to specification. Refer to MT-17, "Disassembly and Assembly".
   CAUTION:
   Do not reuse gasket.

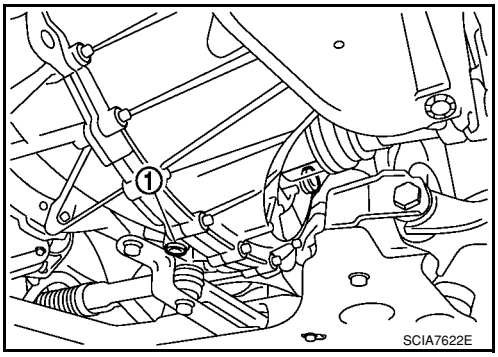

FILLING

1. Remove filler plug (1). Fill with new oil until oil level reaches the specified limit at filler plug hole as shown.

   Oil grade and capacity

   : Refer to MA-10, "Fluids and Lubricants"

2. After refilling oil, check oil level. Install a new gasket on filler plug (1), then install it into transaxle. Tighten filler plug to specification. Refer to MT-17, "Disassembly and Assembly".
   CAUTION:
   Do not reuse gasket.

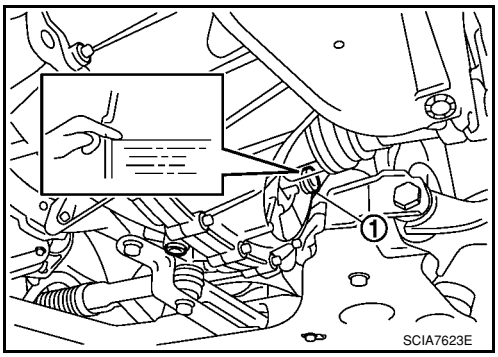

Checking M/T Oil

INFOID:0000000001703135

OIL LEAKAGE AND OIL LEVEL

1. Make sure that oil is not leaking from transaxle or around it.
2. Remove filler plug (1) and check oil level at filler plug hole as shown.
   CAUTION:
   Do not start engine while checking oil level.
3. Install a new gasket onto filler plug (1) and install it into transaxle. Tighten filler plug to specification. Refer to MT-17, "Disassembly and Assembly".
   CAUTION:
   Do not reuse gasket.

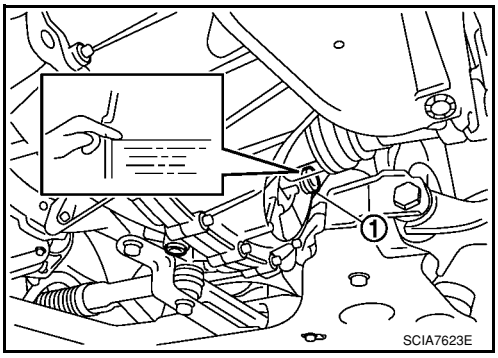

SIDE OIL SEAL

Removal and Installation

INFOID:0000000001703136

REMOVAL

1. Remove front drive shafts from transaxle assembly. Refer to FAX-8, "Removal and Installation (Left Side)".
2. Remove differential side oil seal (1) using a suitable tool.
   CAUTION:
   Be careful not to damage transaxle case and clutch housing.

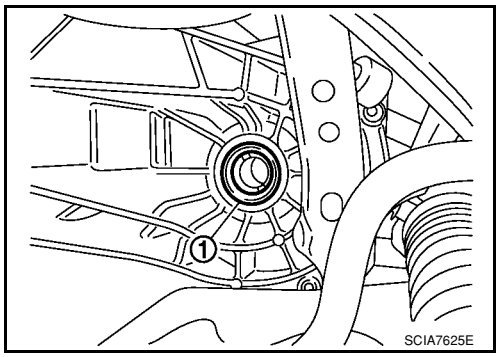

INSTALLATION

1. Install differential side oil seal (1) to clutch housing and transaxle case using Tool (A).

   Tool number **A: ST38100300 (J-25523)**

2. Installation is in the reverse order of removal. Check oil level after installation. Refer to MA-21, "Checking M/T Oil".
   CAUTION:
   Do not reuse oil seal.

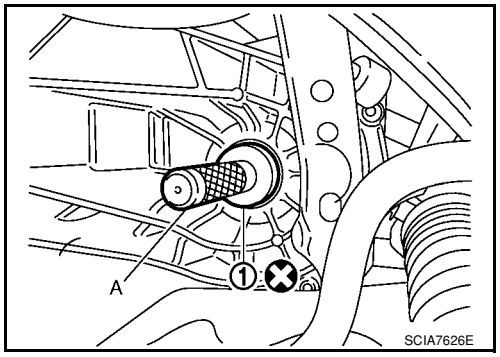

POSITION SWITCH

Checking

INFOID:0000000001703137

NOTE:
For removal and installation of the switches, refer to MT-17, "Disassembly and Assembly"

BACK-UP LAMP SWITCH

- Check continuity between terminals 1 and 2.

Gear position	Continuity
Reverse	Yes
Except reverse	No

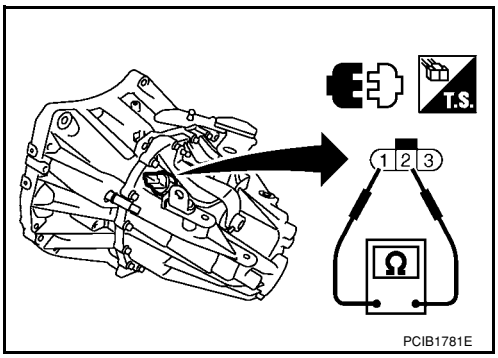

PARK/NEUTRAL POSITION SWITCH

- Check continuity between terminals 2 and 3.

Gear position	Continuity
Neutral	Yes
Except neutral	No

CONTROL LINKAGE

Component of Control Device and Cable

INFOID:0000000001703138

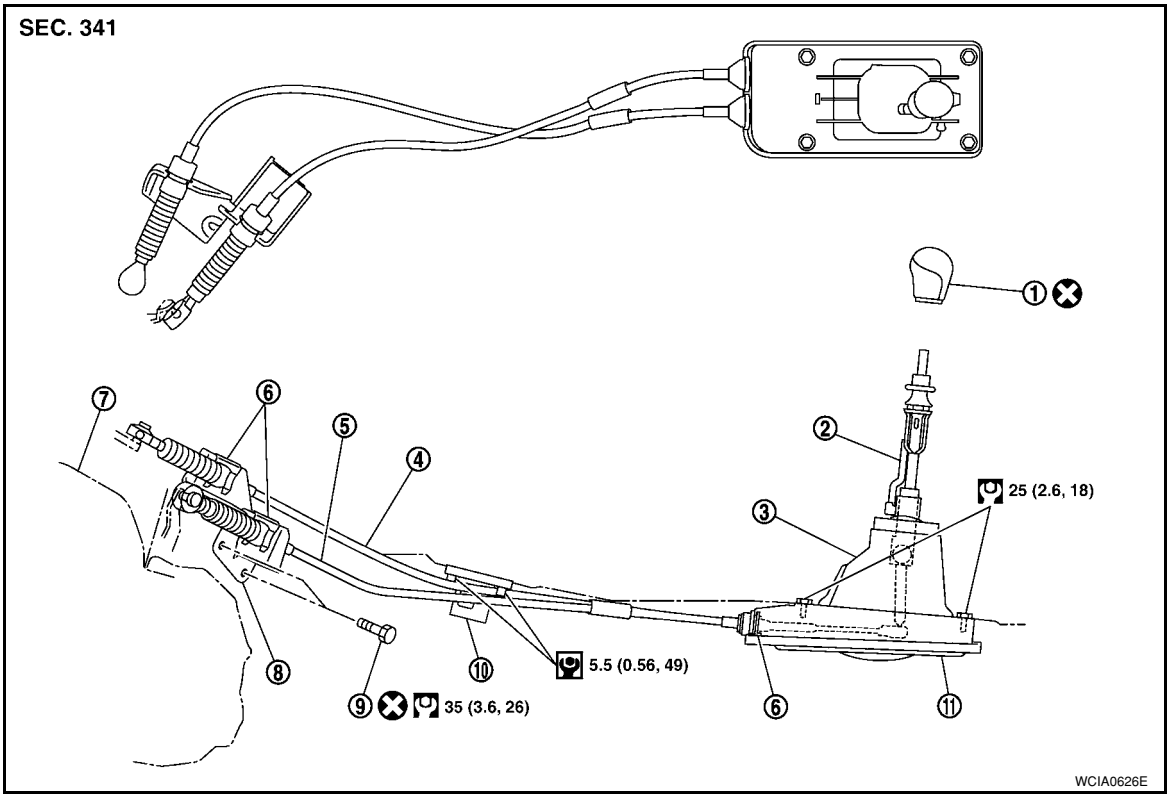

1. Control lever knob	2. Control lever	3. Control device assembly
4. Select cable	5. Shift cable	6. Lock plate
7. Clutch housing	8. Cable bracket	9. Tapping bolt
10. Cable support bracket	11. Adapter plate	

Removal and Installation

INFOID:0000000001703139

REMOVAL

1. Remove battery. Refer to SC-6, "Removal and Installation".
2. Remove air duct (Inlet), air duct and air cleaner case. Refer to EM-16, "Removal and Installation".
3. Remove shift cable from shift lever.
4. Remove select cable according to the following.

a. Move stopper (1) to the unlocked position.

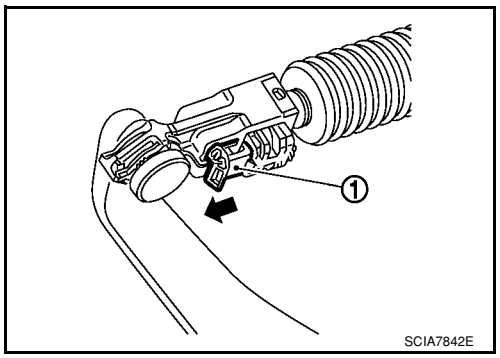

b. Pull the release button (1) of select cable (2) and then remove it from select lever (3).
5. Shift control lever to neutral position.
6. Remove control lever knob.
7. Remove center console assembly. Refer to IP-11, "Removal and Installation".
8. Remove control device assembly bolts.
9. Remove exhaust front tube, center muffler and heat plate. Refer to EX-4, "Removal and Installation".
10. Remove cable support bracket.
11. Remove select cable and shift cable from cable bracket.
12. Remove control device assembly from the vehicle.

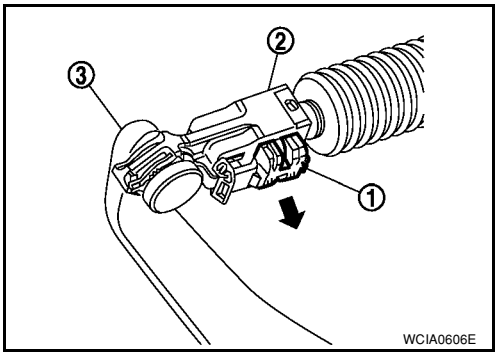

INSTALLATION

Installation is in the reverse order of removal.

NOTE:

Self tapping bolts are used to attach cables to the clutch housing.

- Securely assemble each cable and lever of control shaft.
- Be careful about the installation direction, and push control lever knob onto control lever.

  CAUTION:

  Do not reuse control lever knob.

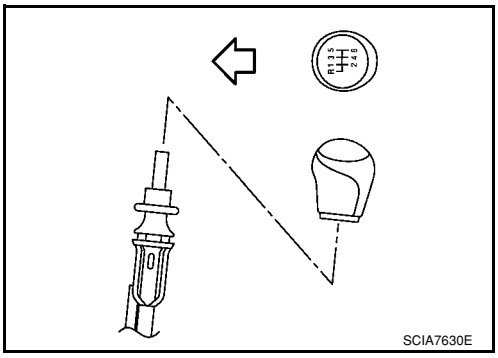

- Make sure that the front/rear claws (1) of control device assembly are in contact with flange of the floor (2).
- When control lever is selected to 1st-2nd side and 5th-6th side, confirm control lever returns to neutral position smoothly.
- When control lever is shifted to each position, make sure there is no binding or disconnection in each boot.

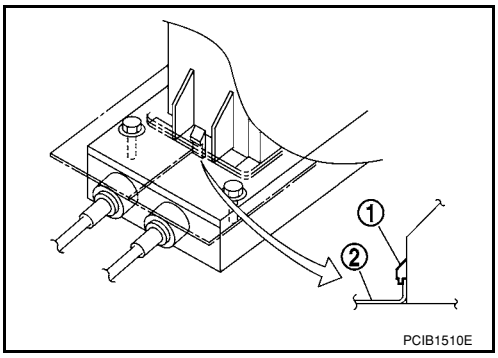

- Move stopper (1) to lock position when installing the shift cable onto the shift lever.

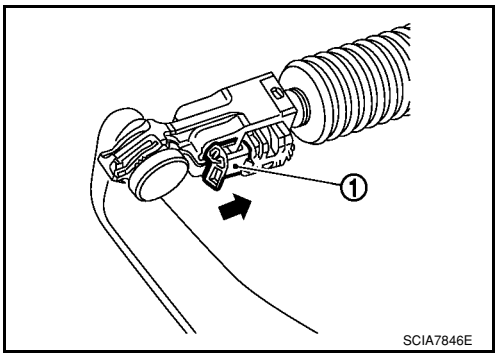

AIR BREATHER HOSE

Removal and Installation

INFOID:0000000001703140

COMPONENTS

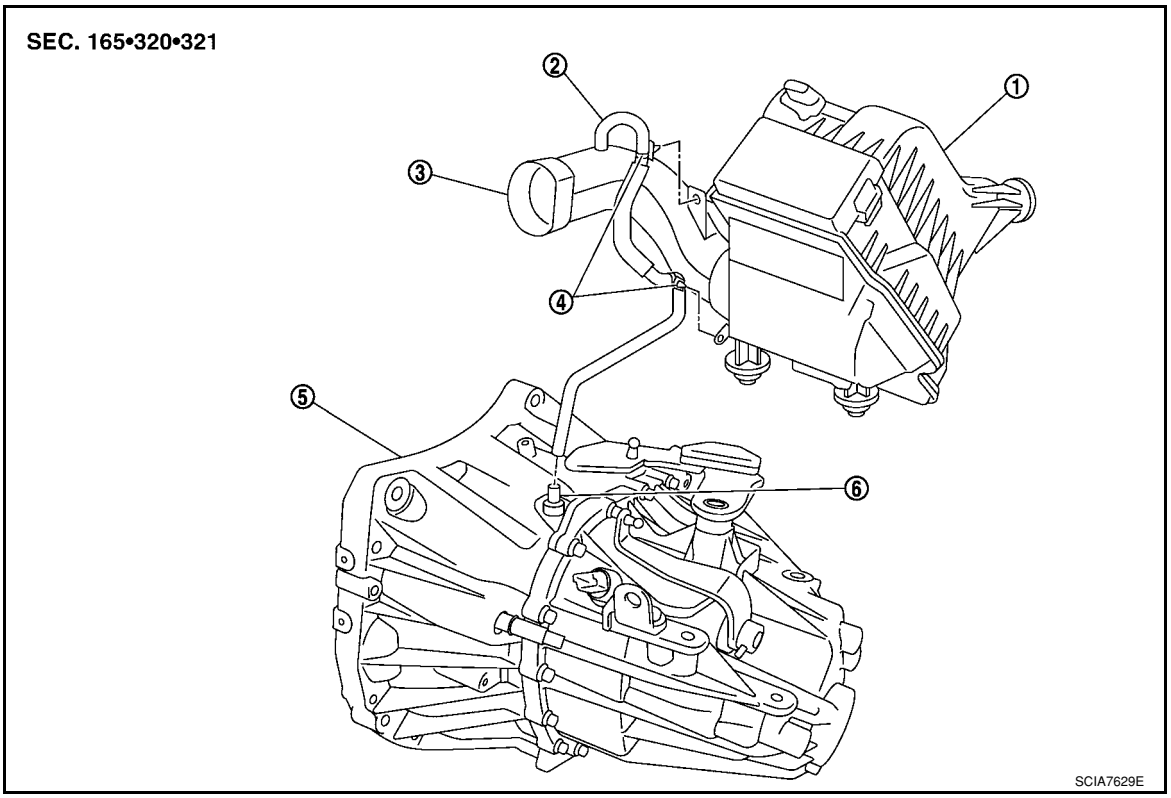

1.	Air cleaner case	2.	Air breather hose	3.	Air duct
4.	Clip	5.	Transaxle assembly	6.	Two way connector

REMOVAL

1. Remove battery. Refer to SC-6, "Removal and Installation".
2. Remove air duct (Inlet), air duct and air cleaner case. Refer to EM-16, "Removal and Installation".
3. Remove air breather hose.
   CAUTION:
   When air breather hose is removed, be sure to hold two way connector securely.

INSTALLATION

Installation is in the reverse order of removal.

- When installing air breather hose on two way connector, aim paint mark face toward the vehicle front.
- When installing air breather hose on two way connector, push it until it hits transaxle case.
- When installing air breather hose to air duct and air cleaner case, make sure that clips are fully inserted.

CAUTION:
Make sure air breather hose is not collapsed or blocked due to folding or bending when installed.

TRANSAXLE ASSEMBLY

Removal and Installation

INFOID:0000000001703141

CAUTION:
If transaxle assembly is removed from the vehicle, always replace CSC (Concentric Slave Cylinder). Inserted CSC returns to the original position when removing transaxle assembly. Dust on clutch disc sliding parts may damage CSC seal, and may cause clutch fluid leakage.

COMPONENTS

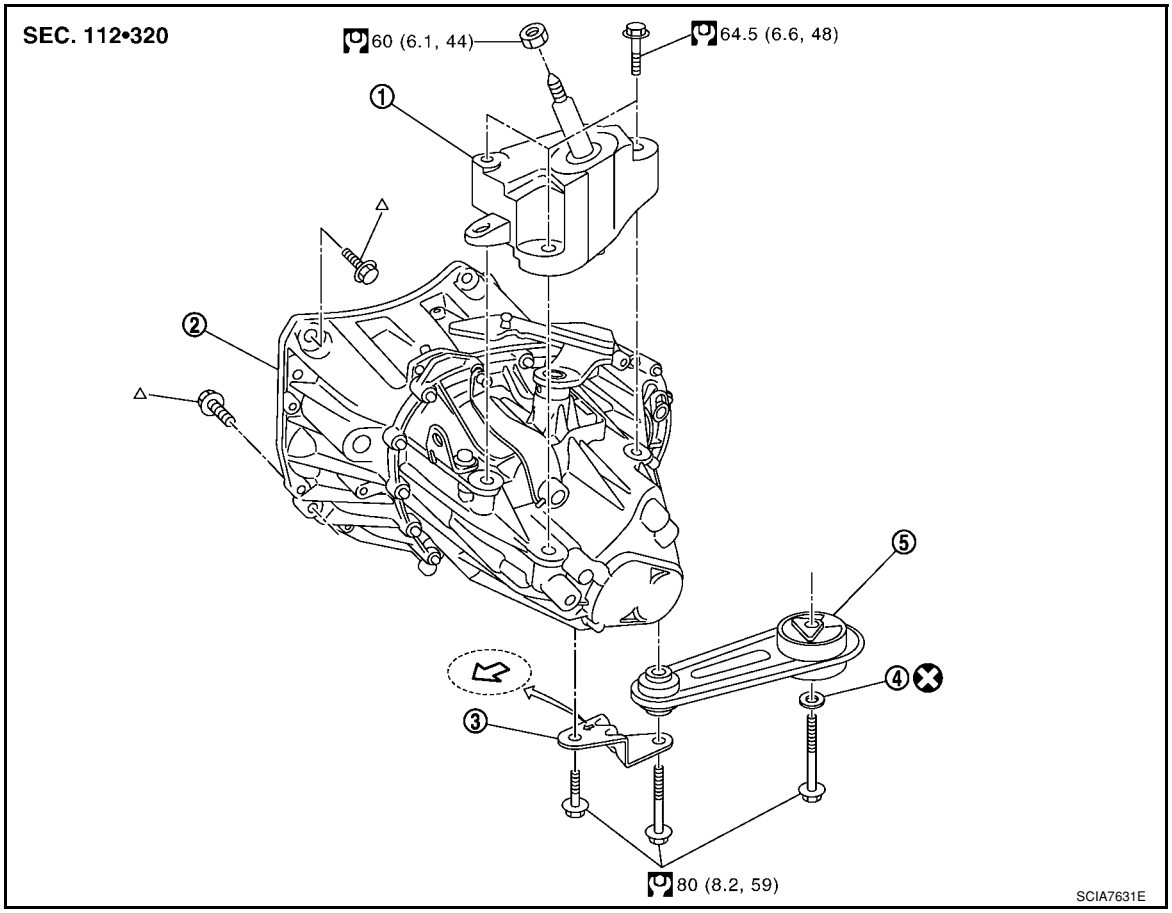

1.	LH engine mount bracket (transaxle side)	2.	Transaxle assembly	3.	Rear engine mount bracket
4.	Washer	5.	Rear torque rod	⇐	Front

△: Refer to MT-16, "Removal and Installation".

REMOVAL

1. Drain gear oil. Refer to MA-21, "Changing M/T Oil".
2. Drain clutch fluid and remove clutch tube from CSC. Refer to CL-9, "Removal and Installation".
   CAUTION:
   Do not depress clutch pedal during removal procedure.
3. Remove engine and transaxle assembly. Refer to EM-72, "Removal and Installation".
4. Remove starter motor. Refer to SC-19, "Removal and Installation".
5. Remove transaxle assembly to engine bolts.
6. Separate transaxle assembly from engine.

INSTALLATION

Installation is in the reverse order of removal.

CAUTION:

When installing transaxle assembly, be careful not to bring transaxle input shaft into contact with clutch cover.

- If transaxle is removed from the vehicle, always replace CSC. Refer to CL-11, "Removal and Installation".
- When installing the transaxle assembly to the engine, install the bolts as shown.
  A: M/T to engine
  B: Engine to M/T

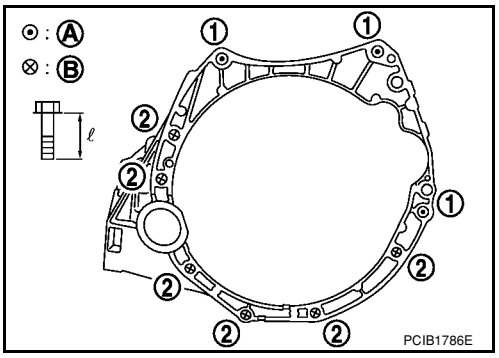

Bolt No.	1	2
Quantity	3	6
Bolt length " ℓ " mm (in)	60 (2.36)	50 (1.97)
Tightening torque N·m (kg-m, ft-lb)	62.0 (6.3, 46)	

- After installation, bleed the air from the clutch hydraulic system. Refer to CL-8, "Air Bleeding Procedure".
- After installation, check oil level, and check for leaks and loose mechanisms. Refer to MA-21, "Checking M/T Oil".

Disassembly and Assembly

INFOID:0000000001703142

COMPONENTS

Case and Housing Components

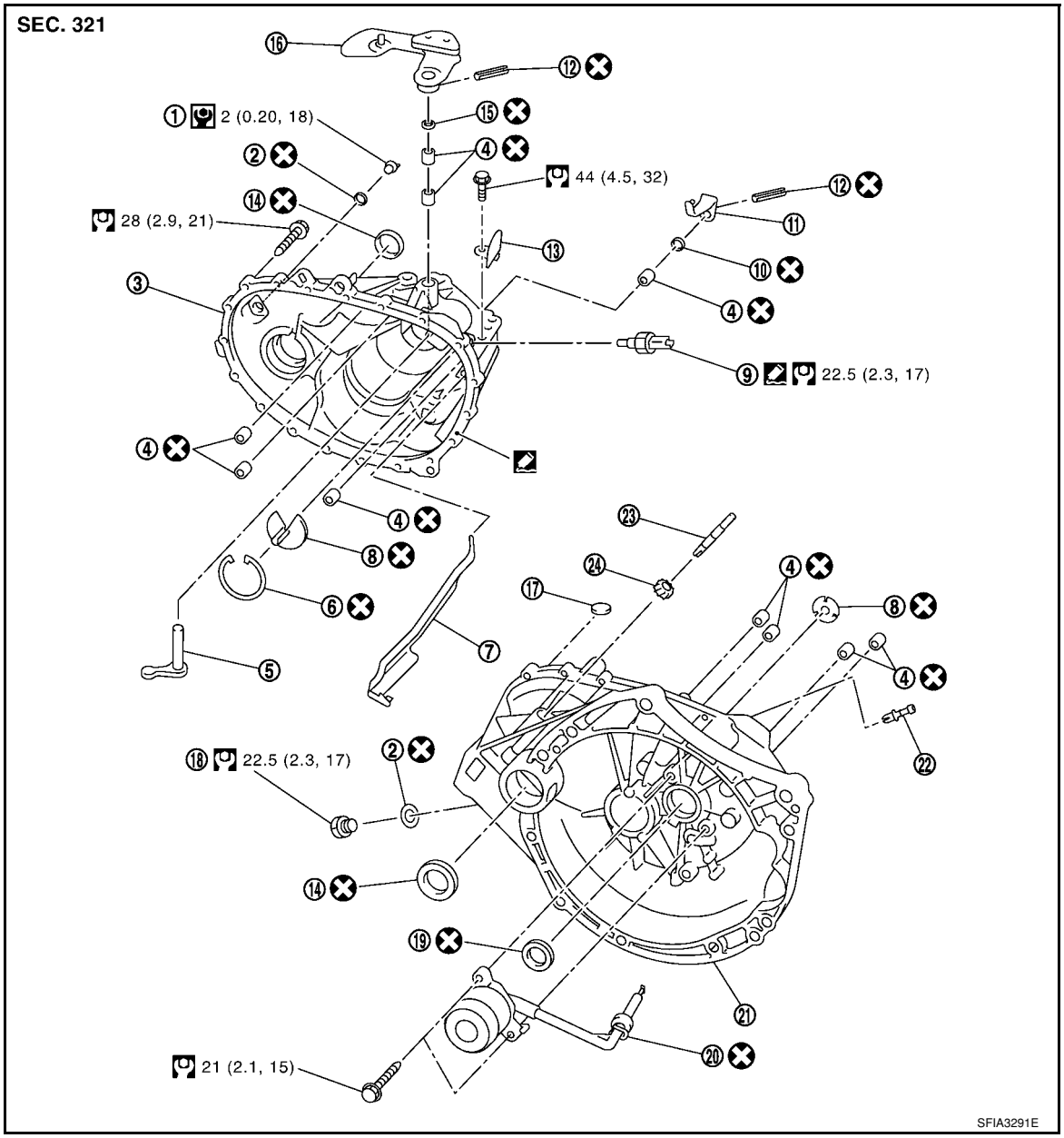

1. Filler plug	2. Gasket	3. Transaxle case
4. Bushing	5. Shift finger	6. Snap ring
7. Oil gutter	8. Oil channel	9. Position switch
10. Shift lever oil seal	11. Shift lever	12. Retaining pin
13. Bracket	14. Differential side oil seal	15. Control lever oil seal
16. Control lever	17. Magnet	18. Drain plug
19. Input shaft oil seal	20. CSC (Concentric Slave Cylinder)	21. Clutch housing
22. Two way connector	23. Pinion shaft	24. Pinion gear

Apply Genuine Silicone RTV or the equivalent.

Gear Components

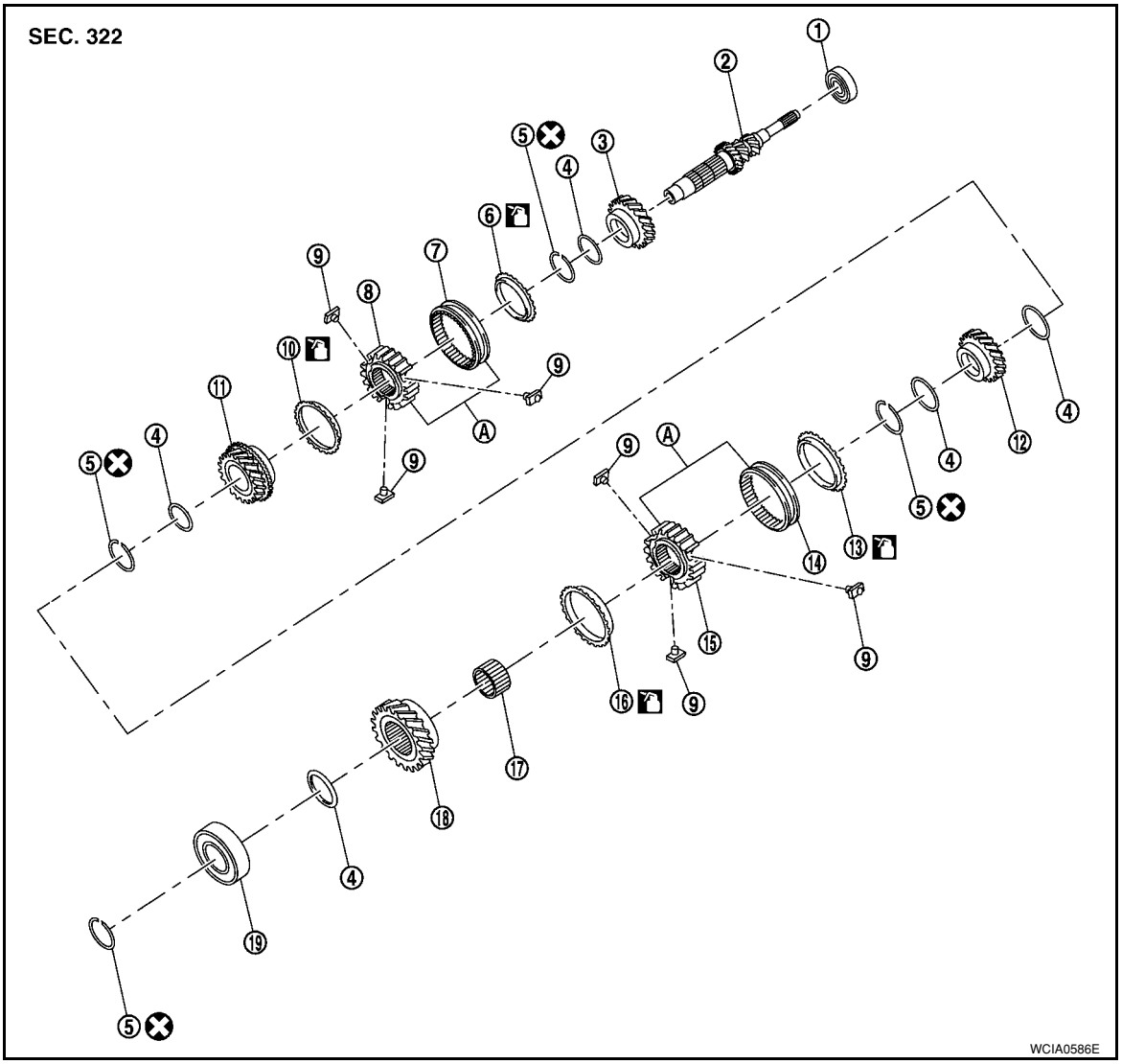

1. Input shaft front bearing	2. Input shaft	3. 3rd input gear
4. Washer	5. Snap ring	6. 3rd baulk ring
7. 3rd-4th coupling sleeve	8. 3rd-4th synchronizer hub	9. Insert key
10. 4th baulk ring	11. 4th input gear	12. 5th input gear
13. 5th baulk ring	14. 5th-6th coupling sleeve	15. 5th-6th synchronizer hub
16. 6th baulk ring	17. Needle bearing	18. 6th input gear
19. Input shaft rear bearing	A. Replace the parts as a set	Apply gear oil

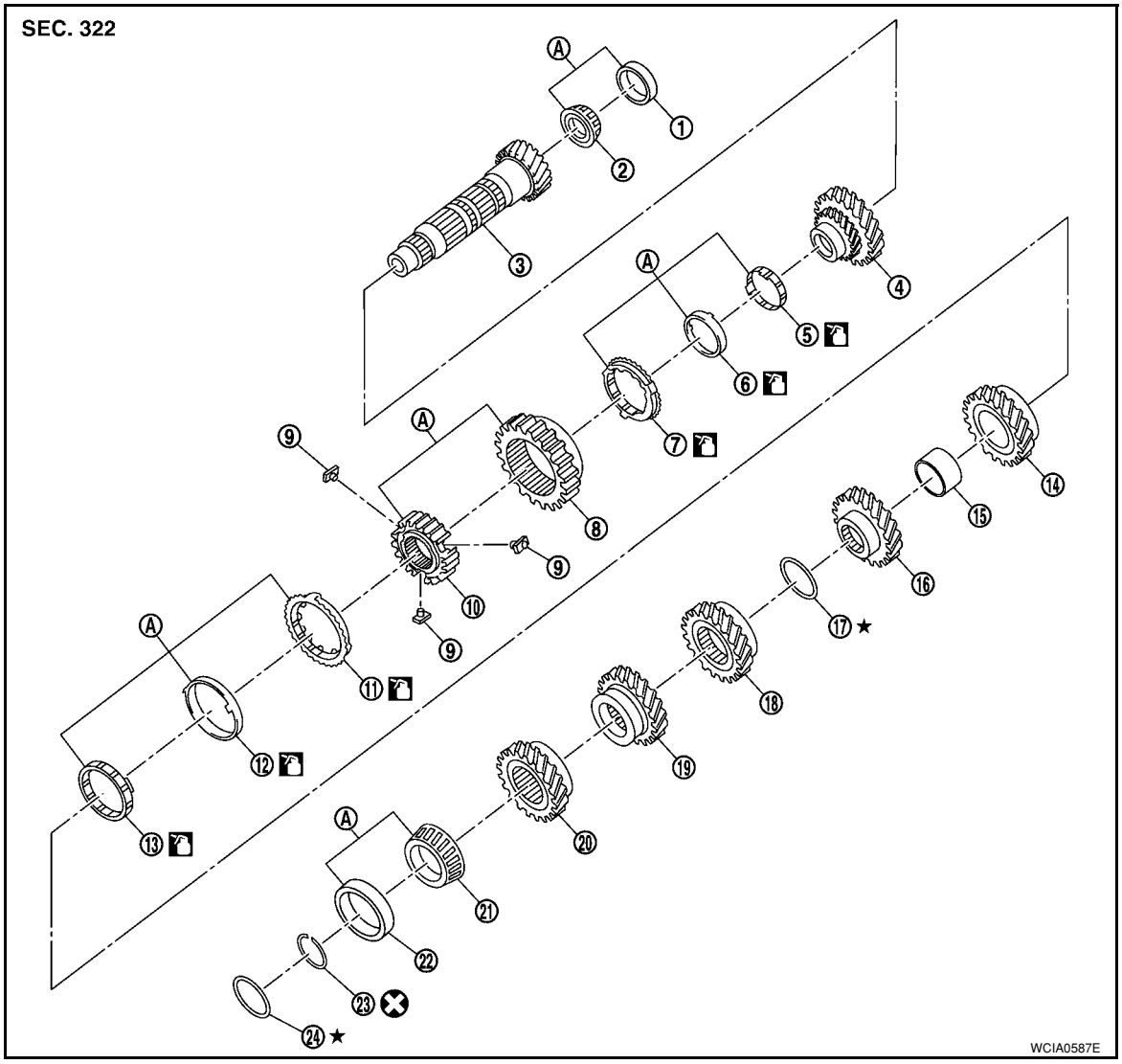

1. Main shaft front bearing outer race	2. Main shaft front bearing inner race	3. Main shaft
4. 1st main gear	5. 1st inner baulk ring	6. 1st synchronizer cone
7. 1st outer baulk ring	8. 1st-2nd coupling sleeve	9. Insert key
10. 1st-2nd synchronizer hub	11. 2nd outer baulk ring	12. 2nd synchronizer cone
13. 2nd inner baulk ring	14. 2nd main gear	15. Bushing
16. 3rd main gear	17. Intermediate adjusting shim	18. 4th main gear
19. 5th main gear	20. 6th main gear	21. Main shaft rear bearing inner race
22. Main shaft rear bearing outer race	23. Snap ring	24. Bearing preloading shim
A. Replace the parts as a set	Apply gear oil	

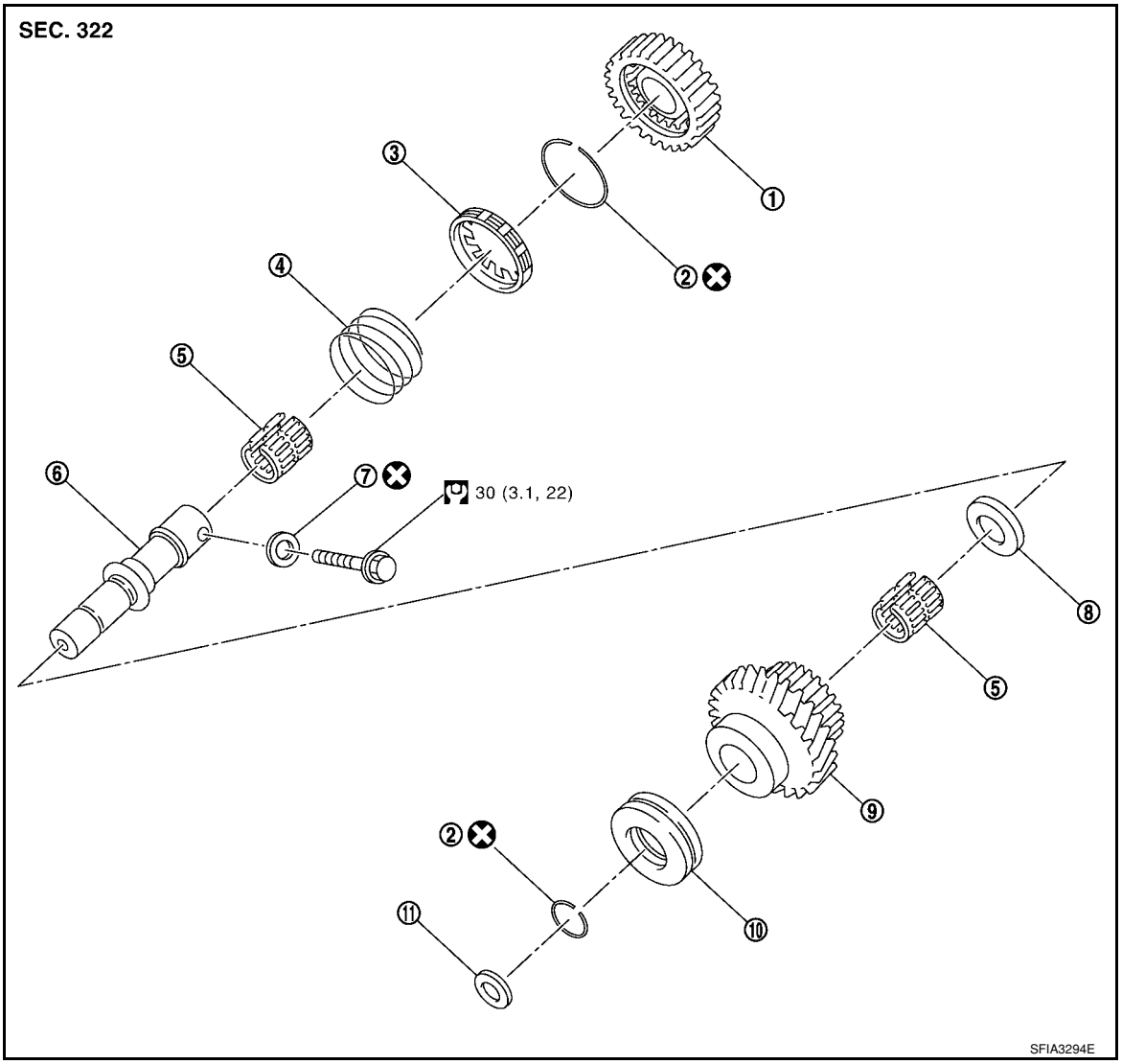

1. Reverse output gear	2. Snap ring	3. Reverse baulk ring
4. Return spring	5. Needle bearing	6. Reverse idler shaft
7. Seal washer	8. Washer	9. Reverse input gear
10. Lock washer	11. Spring washer	

Shift Control Components

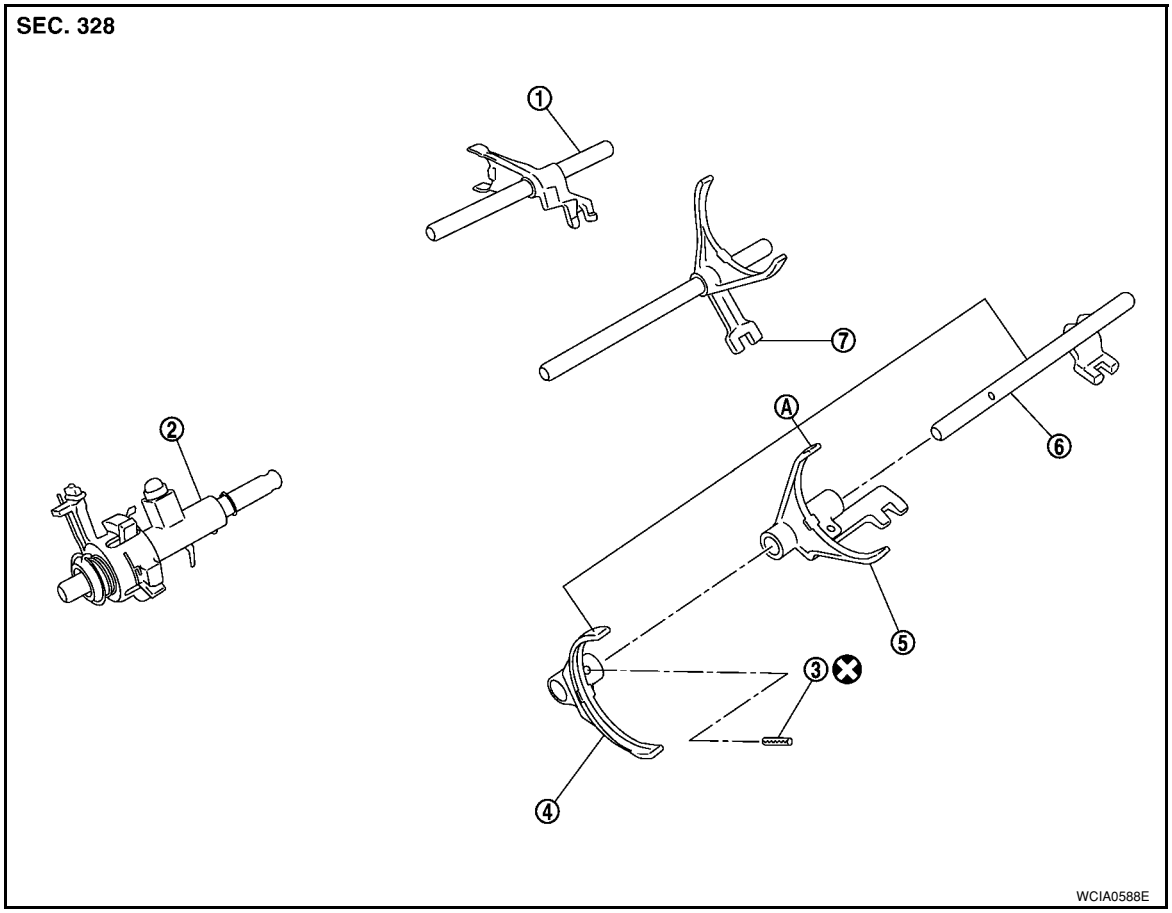

1. Reverse fork rod
2. Selector
3. Retaining pin
4. 5th-6th shift fork
5. 3rd-4th shift fork
6. 3rd-4th and 5th-6th fork rod
7. 1st-2nd fork rod
A. Replace the parts as a set

Final Drive Components

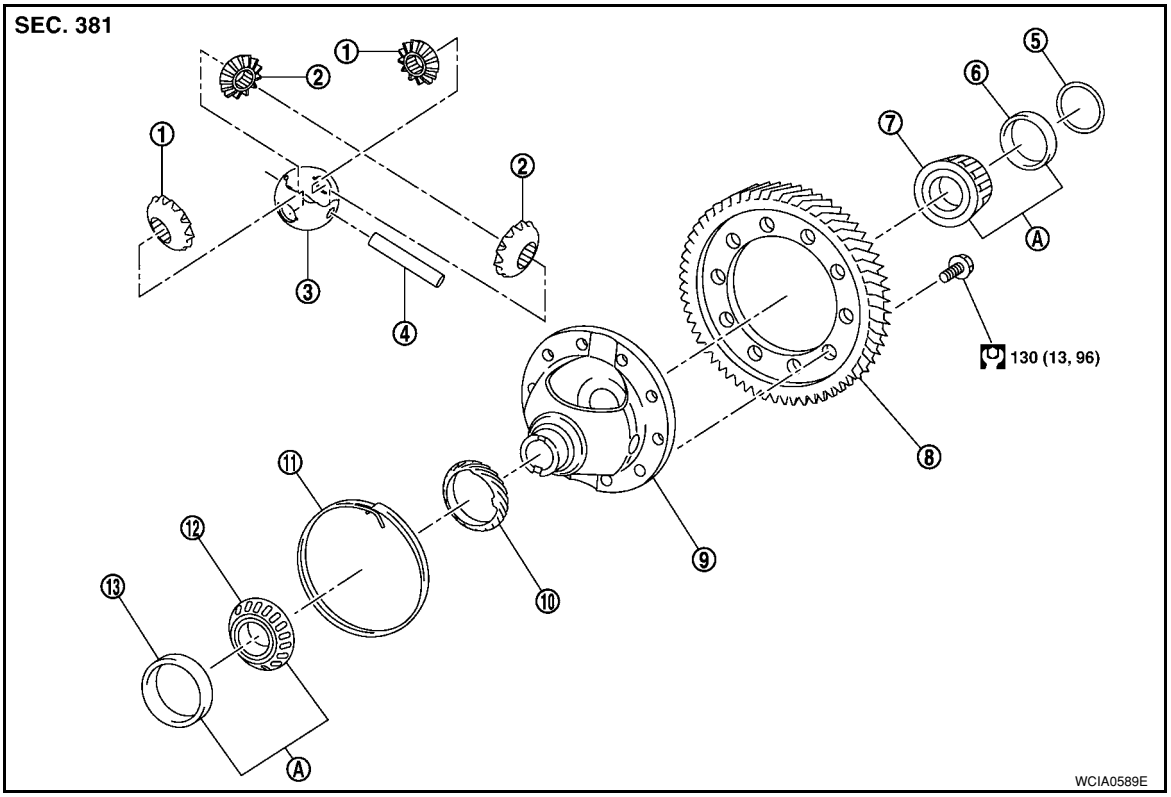

1. Side gear	2. Pinion mate gear	3. Thrust washer
4. Pinion mate shaft	5. shim	6. Differential side bearing outer race (transaxle case side)
7. Differential side bearing inner race (transaxle case side)	8. Final gear	9. Differential case
10. Speedometer drive gear	11. Lock ring	12. Differential side bearing inner race (clutch housing side)
13. Differential side bearing outer race (clutch housing side)	A. Replace the parts as a set	

DISASSEMBLY

1. Remove drain plug and gasket from clutch housing, and drain oil.
2. Remove filler plug and gasket from transaxle case.
3. Remove CSC from clutch housing.
4. Remove retaining pin from shift lever (1) using suitable tool.
5. Remove bracket (2) and position switch (3) from transaxle case.

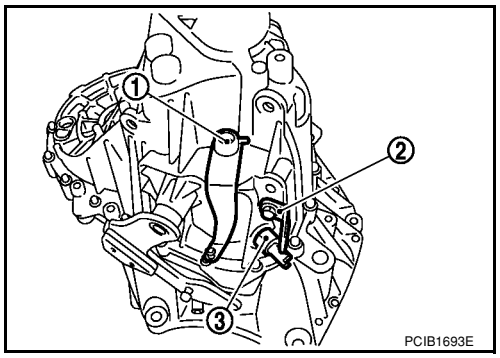

6. Remove the bolts.

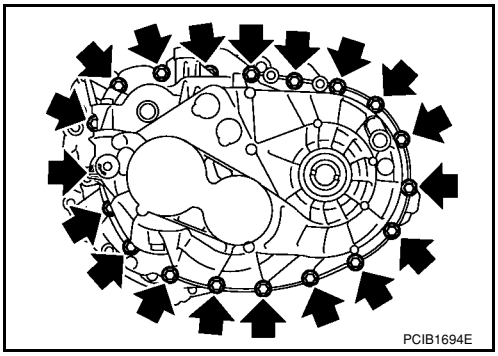

7. Remove reverse idler shaft bolt (⬅) and seal washer.

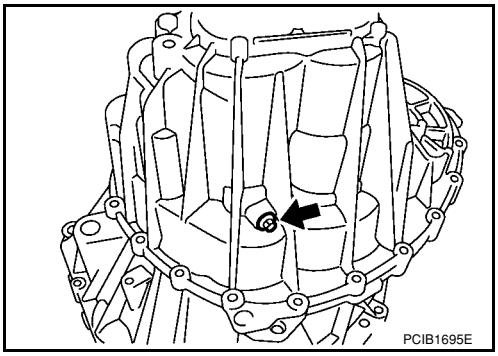

8. Remove transaxle case (1) upward while rotating control lever (2).

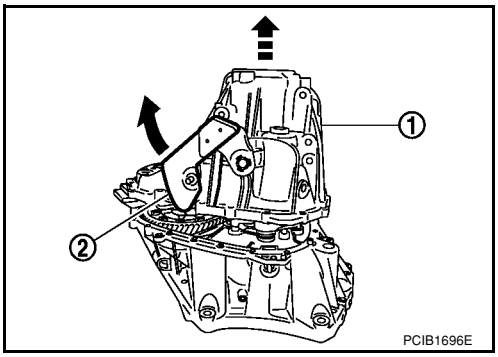

9. Remove spring (1) of selector from return bushing (2).
10. Remove bearing preloading shim from mainshaft assembly.

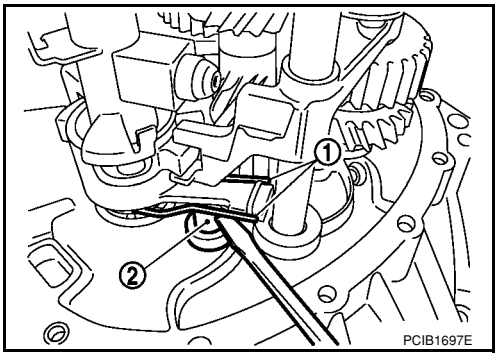

11. Move 1st-2nd fork rod (1), 3rd-4th and 5th-6th fork rod (2), and reverse fork rod (3) to neutral position.
12. Remove selector (4) from clutch housing.

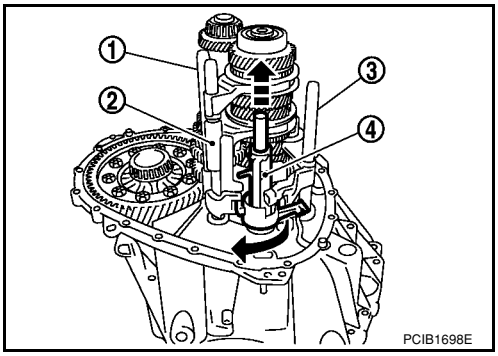

13. Remove retaining pin from 5th-6th shift fork using suitable tool.

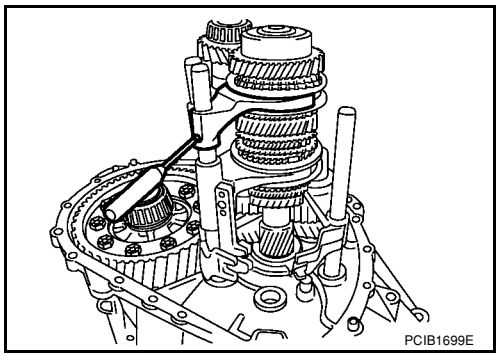

14. Remove 3rd-4th and 5th-6th fork rod assembly according to the following.
a. Lift the fork rod (1) up.
b. Remove 3rd-4th and 5th-6th fork rod assembly from clutch housing.

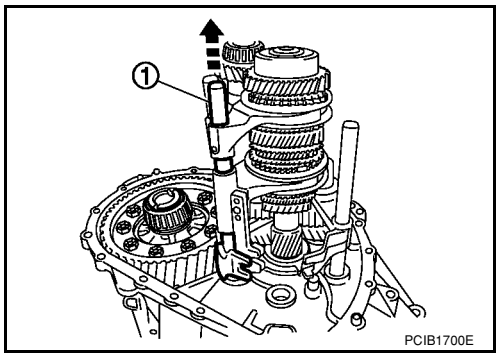

15. Remove reverse gear assembly (1) according to the following:
a. Lift the input shaft assembly (2) and mainshaft assembly (3) up.
b. Remove reverse gear assembly (1) and reverse fork rod (4) from clutch housing.
16. Remove spring washer located under the reverse idler shaft.

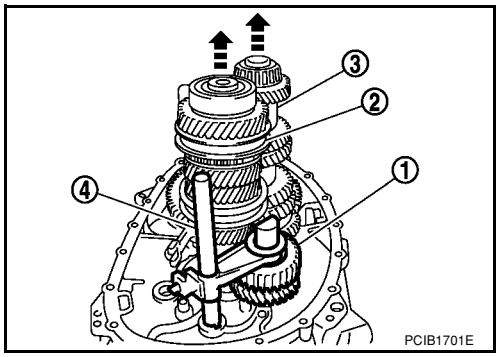

17. Remove input shaft assembly (1), mainshaft assembly (2), and 1st-2nd fork rod (3) from clutch housing.

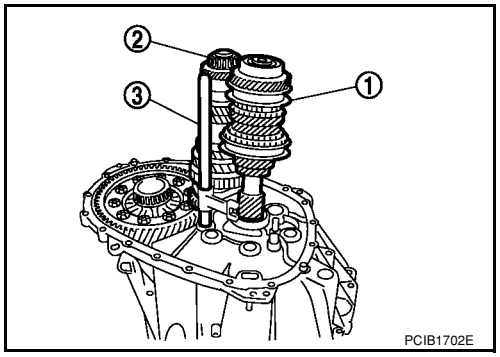

18. Remove final drive assembly (1) from clutch housing.
19. Remove magnet from clutch housing.

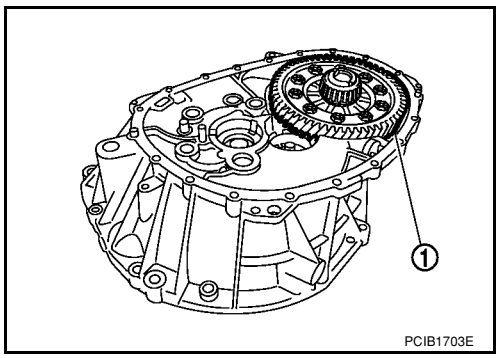

20. Remove differential side oil seals (1) from clutch housing and transaxle case using suitable tool.
    CAUTION:
    Be careful not to damage clutch housing and transaxle case.

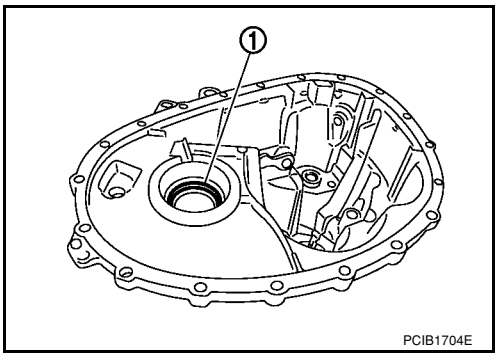

21. Remove differential side bearing outer race (1) from clutch housing using suitable tool.
    CAUTION:
    Be careful not to damage clutch housing.

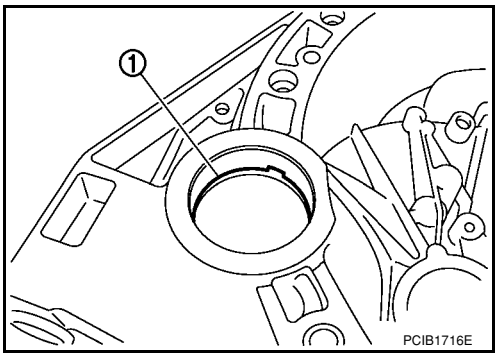

22. Remove differential side bearing outer race (1) and shim (2) from transaxle case using a brass bar as shown.
    CAUTION:
    Be careful not to damage transaxle case.

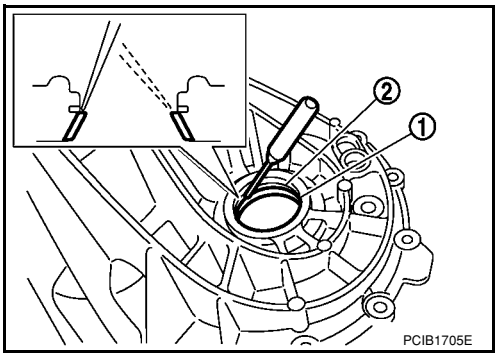

23. Remove retaining pin from control lever (1) using suitable tool.
24. Remove control lever.

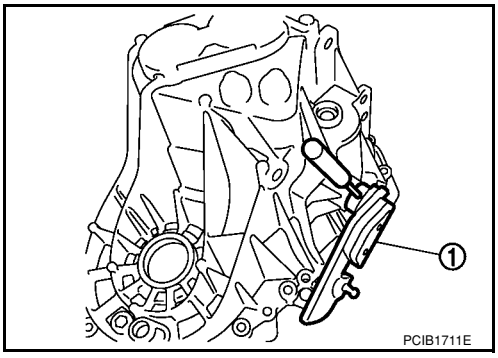

25. Remove shift finger (1) from transaxle case.

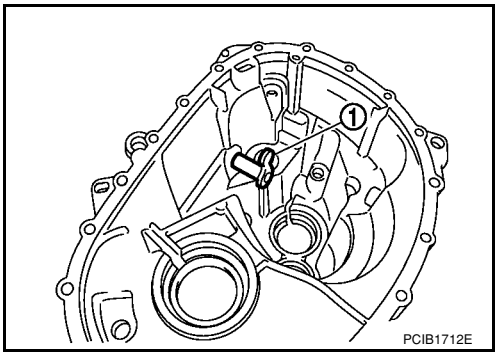

26. Remove control lever oil seal and bushings from transaxle case using suitable tool.

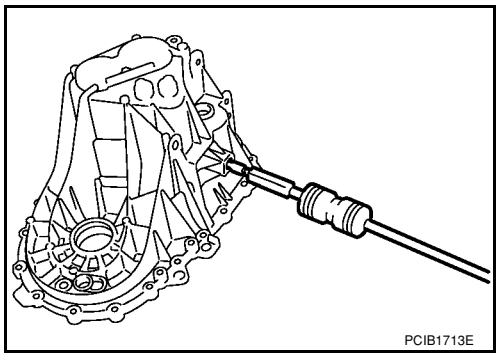

27. Remove oil gutter (1) from transaxle case.

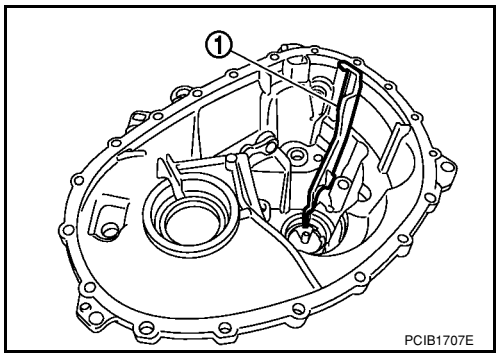

28. Remove shift lever oil seal (1) from transaxle case.

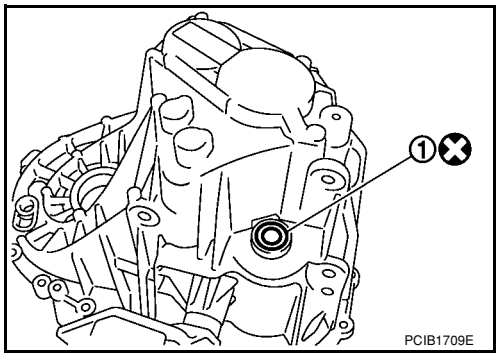

29. Remove bushings (1) from transaxle case using suitable tool.

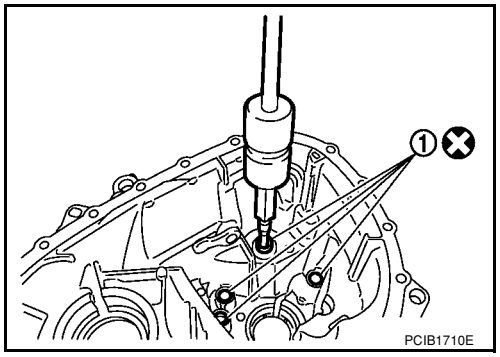

30. Remove mainshaft rear bearing outer race and shim from transaxle case using suitable tool.
CAUTION:
Be careful not to damage transaxle case.

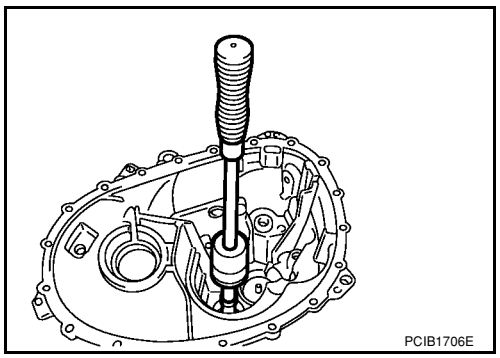

31. Remove snap ring (1) and oil channel (2) from transaxle case.

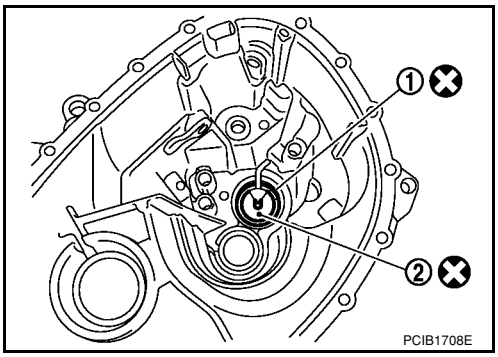

32. Remove input shaft oil seal (1) from clutch housing using suitable tool.

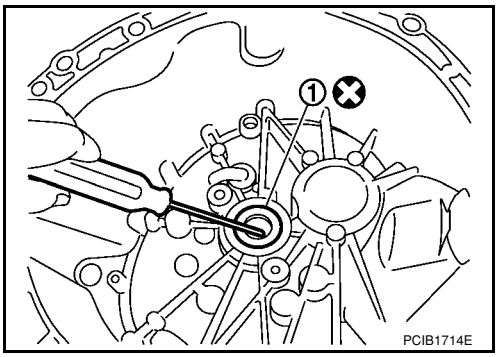

33. Remove mainshaft front bearing outer race (1) and oil channel (2) from clutch housing using Tool (A) and suitable tool (B).

Tool number : KV381054S0 (J-34286)

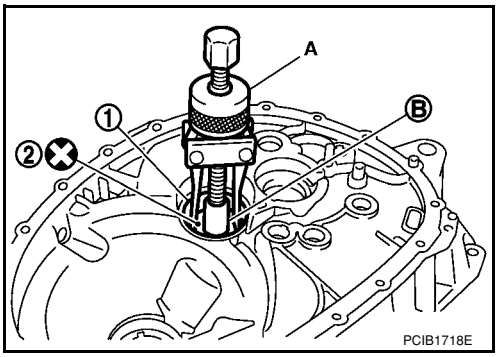

34. Remove busings (1) from clutch housing using suitable tool.

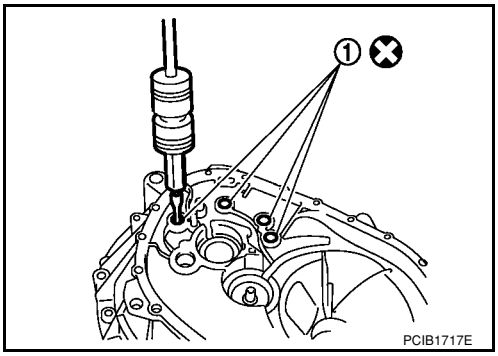

35. Remove two way connector (1) from clutch housing.

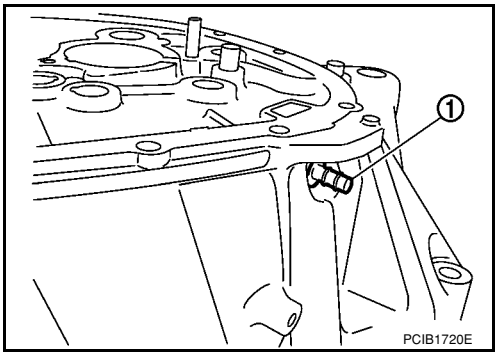

36. Remove pinion gear (1) and pinion shaft (2) from clutch housing.

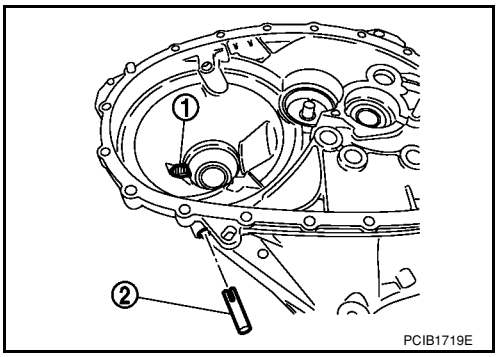

ASSEMBLY

1. Install pinion gear (1) and pinion shaft (2) into clutch housing.

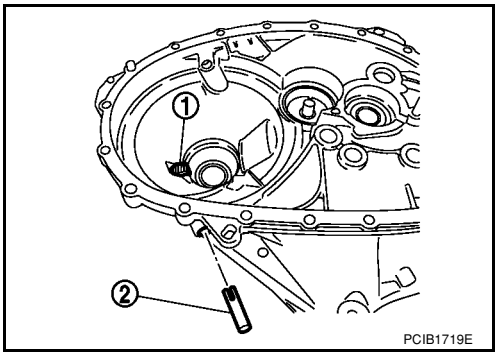

2. Install two way connector (1) into clutch housing.

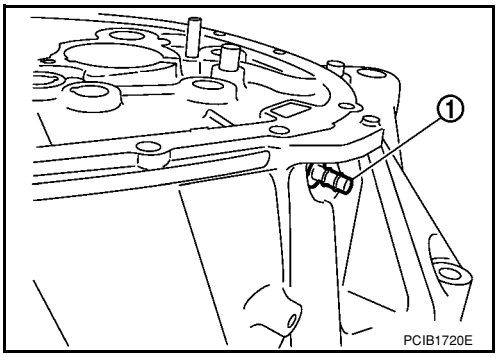

3. Install bushings (1) until they are flush with end face of clutch housing using suitable tool (A).

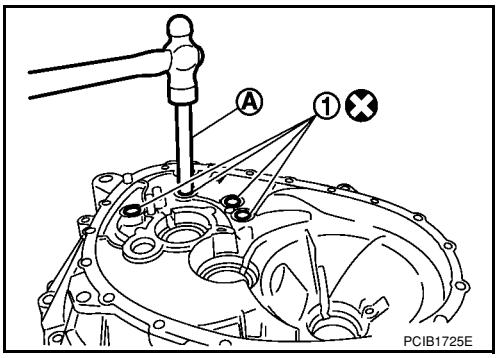

4. Install oil channel and mainshaft front bearing outer race into clutch housing using Tool (A).

   Tool number : KV38100200 (—)

   CAUTION:
   Do not reuse oil channel.

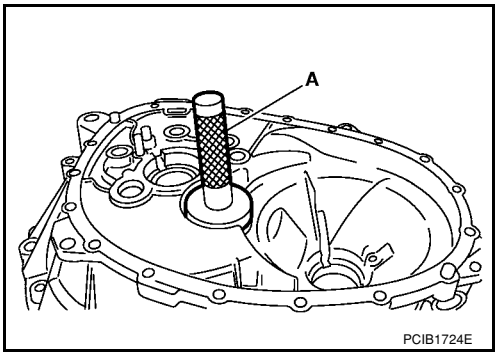

5. Install input shaft oil seal (1) into clutch housing using Tool (A).

   Tool number : ST33220000 (—)

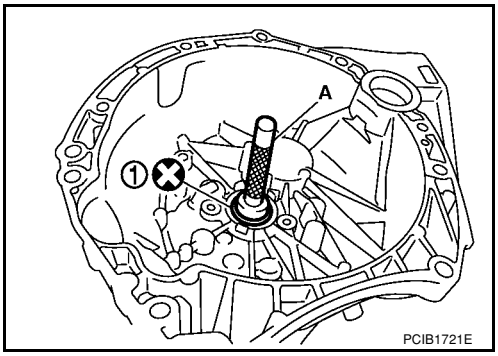

6. Install snap ring (1) and oil channel (2) onto transaxle case.

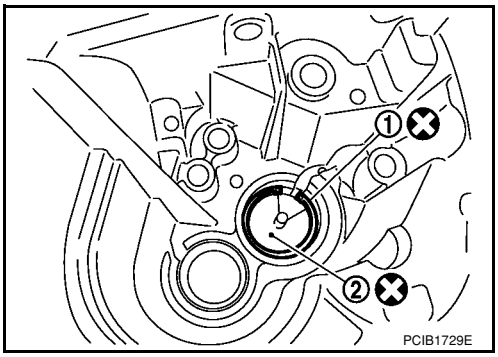

7. Install shim and mainshaft rear bearing outer race into transaxle case using Tool (A).

   Tool number : KV38100200 (—)

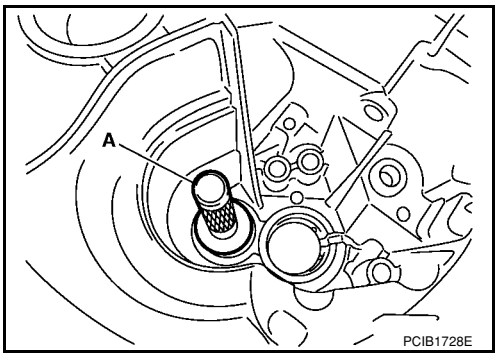

8. Install bushings (1) into transaxle case using suitable tool (A).

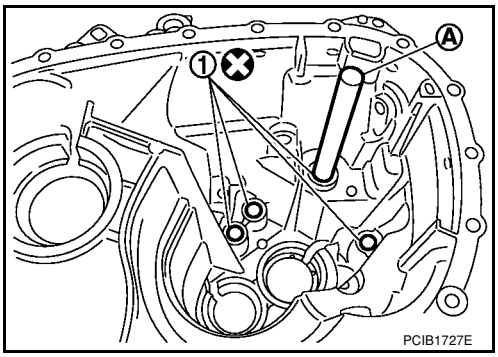

9. Install oil gutter (1) onto transaxle case.

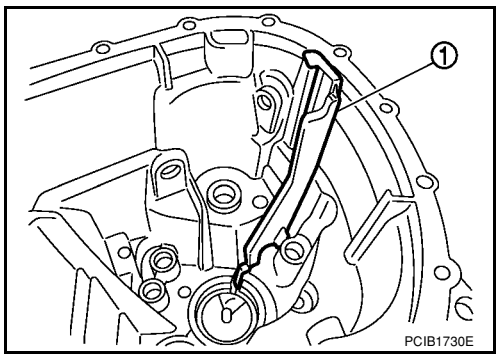

10. Install shift lever oil seal (1) and bushing (2) into transaxle case using suitable tool (A).
11. Install control lever oil seal and bushings into transaxle case using suitable tool.

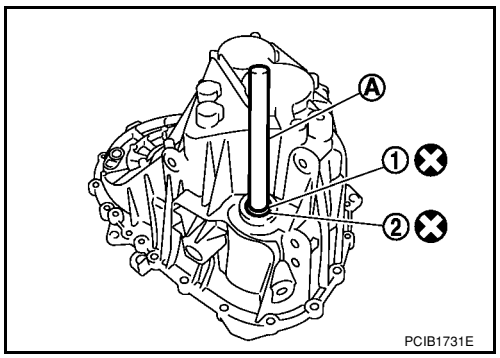

12. Install shift finger (1) into transaxle case.

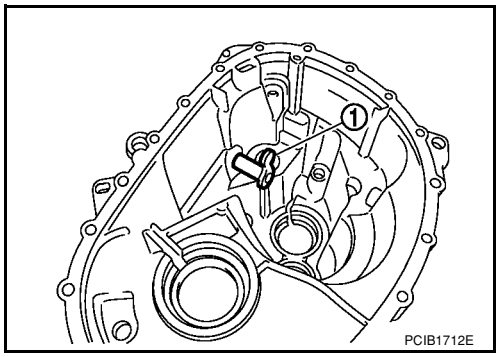

13. Install control lever (1) and then install retaining pin.
CAUTION:
Do not reuse retaining pin.

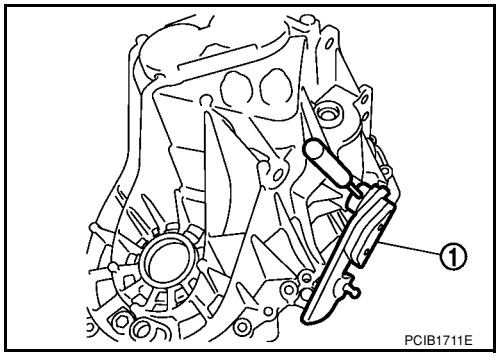

14. Install shim and differential side bearing outer race into transaxle case using Tool (A).

Tool number : ST33400001 (J-26082)

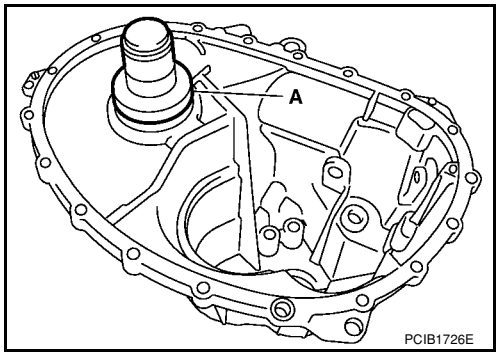

15. Install differential side bearing outer race into clutch housing using Tool (A).

Tool number : KV38100200 (—)

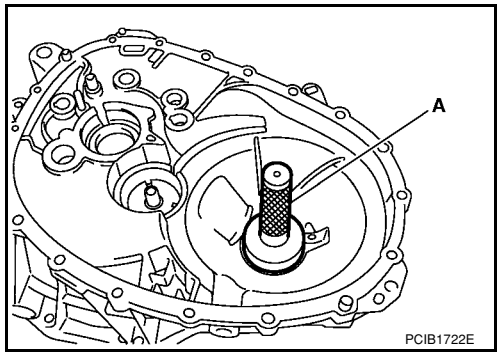

16. Install differential side oil seals (1) into clutch housing and transaxle case using Tool (A).

Tool number : KV38100300 (J-25523)

17. Install magnet onto clutch housing.
18. Install final drive assembly into clutch housing.

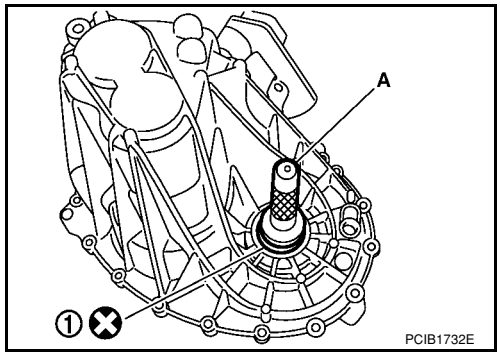

19. Install input shaft assembly (1), mainshaft assembly (2) and 1st-2nd fork rod assembly (3) into clutch housing.
20. Install spring washer located under the reverse idler shaft.

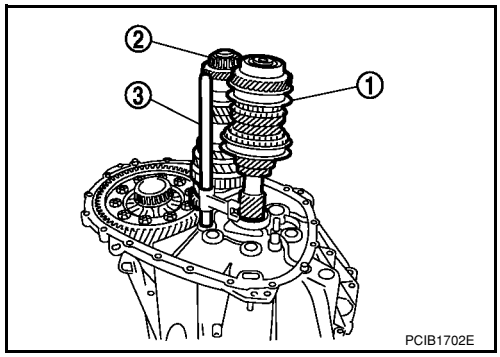

21. Install reverse gear assembly (1) according to the following:
a. Lift up the input shaft assembly (2) and mainshaft assembly (3).
b. Install reverse gear assembly (1) and reverse fork rod (4) to clutch housing.

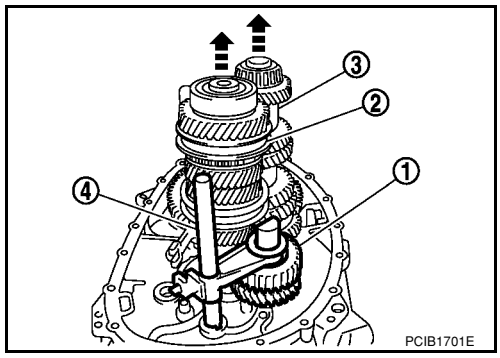

22. While lifting up fork rod (1), install 3rd-4th and 5th-6th fork rod assembly to clutch housing.

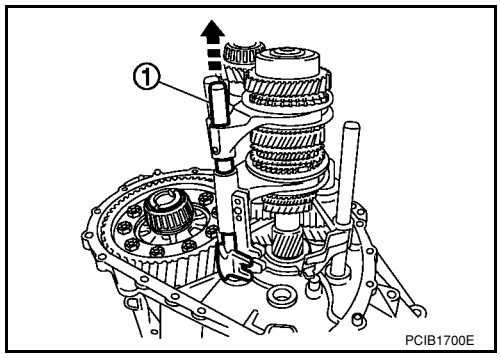

23. Install retaining pin into 5th-6th shift fork using suitable tool.
    CAUTION:
    Do not reuse retaining pin.

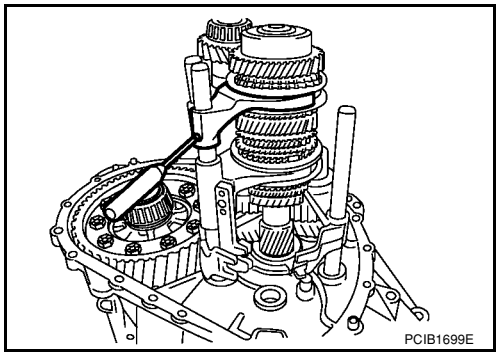

24. Move 1st-2nd fork rod (1), 3rd-4th and 5th-6th fork rod assembly (2), and reverse fork rod (3) to neutral position.
25. Install selector (4) into clutch housing.
26. Install spring of selector into return bushing.
27. Install bearing preloading shim onto mainshaft assembly.
28. Apply recommended sealant onto the mating surface of transaxle case.
    - **Use Genuine Silicone RTV or equivalent. Refer to GI-42, "Recommended Chemical Product and Sealant".**

    CAUTION:
    - **Remove old sealant adhering to the mating surfaces. Also remove any moisture, oil, or foreign material adhering to both mating surfaces.**
    - **Check for damage on the mating surface.**
    - **Apply a continuous bead of liquid gasket to the mating surface.**

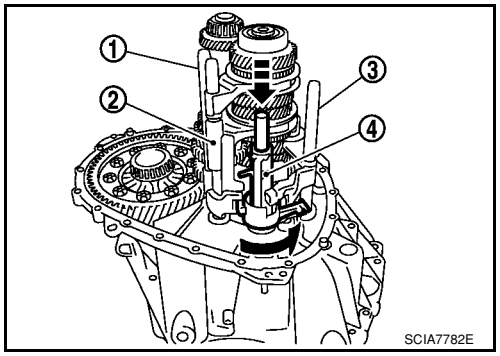

29. Engage shift finger and selector by moving control lever (1). Install transaxle case to clutch housing.

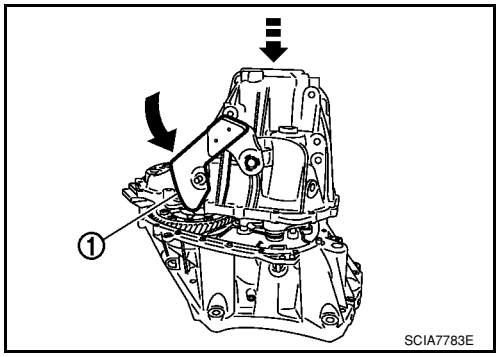

30. Install seal washer and reverse idler shaft bolt (⬅), and then tighten bolt to specification.
    CAUTION:
    Do not reuse seal washer.

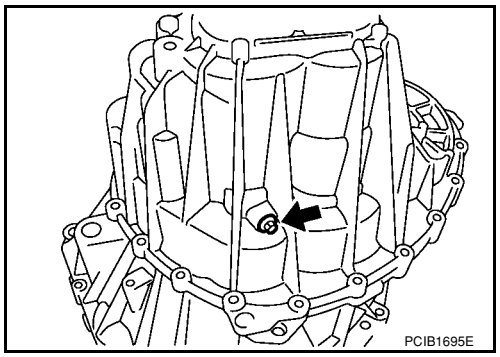

31. Tighten bolts to specification.

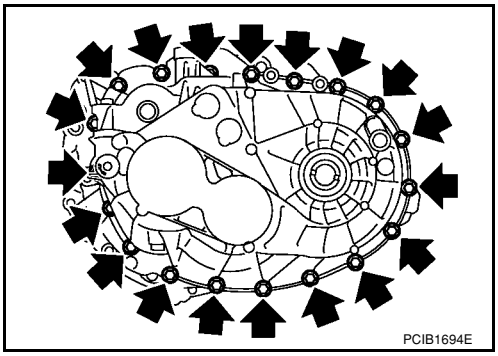

32. Apply sealant to the threads of position switch (1). Then install it into transaxle case and tighten to specification.
    - **Use Genuine Silicone RTV or equivalent.Refer to GI-42, "Recommended Chemical Product and Sealant".**
33. Install bracket (2), and tighten bolt to specification.
34. Install shift lever (3), and then install retaining pin using suitable tool.
    CAUTION:
    Do not reuse retaining pin.
35. Install CSC onto clutch housing. Refer to CL-11, "Removal and Installation".

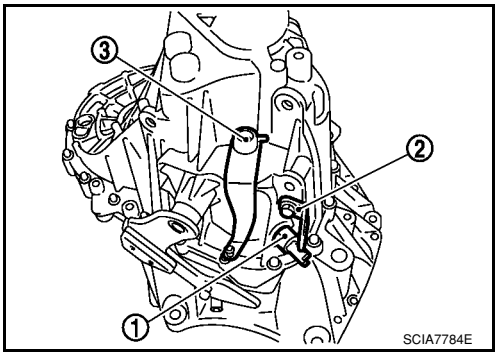

36. Install a new gasket onto drain plug, and then install it into clutch housing. Tighten drain plug to specification.
37. Install a new gasket onto filler plug, and then install it into transaxle case. Tighten filler plug to specification.
    CAUTION:
    - **Do not reuse gasket.**
    - **After oil is filled, tighten filler plug to specification.**

INPUT SHAFT AND GEARS

Disassembly and Assembly

INFOID:0000000001703143

GENERAL PRECAUTIONS

- Do not reuse snap ring.
- Position input shaft on the vise with back plate and remove gears and snap rings.
- For installation and removal of snap ring, position snap ring pliers and flat pliers at both sides of snap ring. Stretch snap ring, and move it with flat pliers.
- Disassemble gear components putting matching marks on the parts that do not affect any functions.

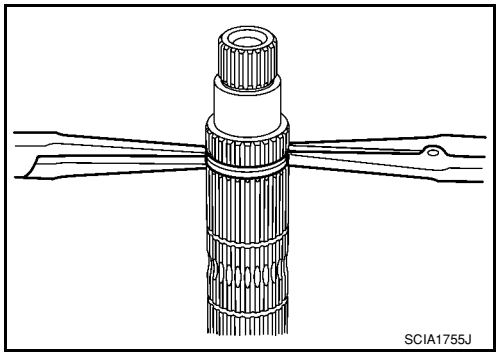

DISASSEMBLY

1. Remove snap ring (1).

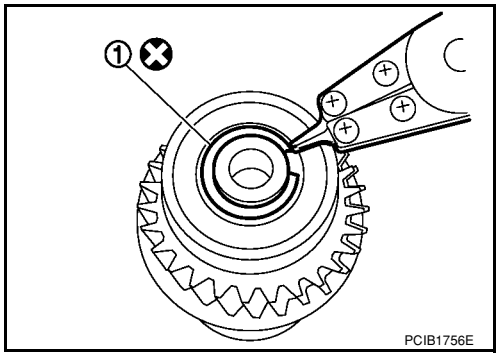

2. Install the suitable tool (A) onto input shaft rear bearing (1), and remove input shaft rear bearing (1) from input shaft.

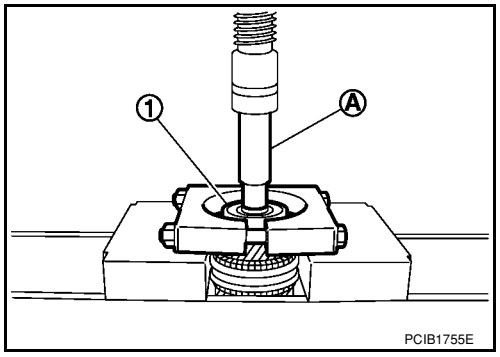

3. Remove washer (1), 6th input gear (2) and 5th-6th synchronizer assembly (3).
4. Remove needle bearing.

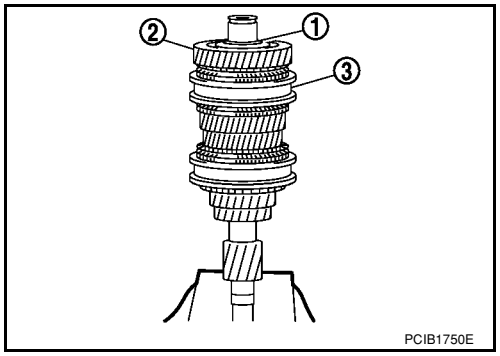

5. Remove snap ring (1), washer and 5th input gear (2).
6. Remove washer.

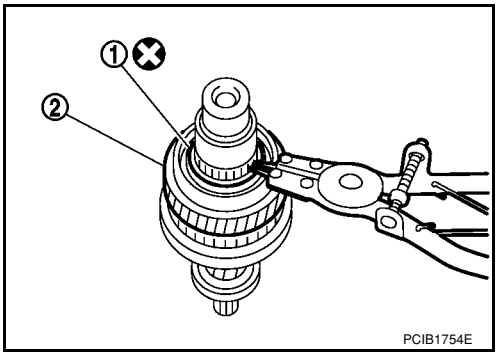

7. Remove snap ring (1), washer, 4th input gear (2) and 3rd-4th synchronizer assembly (3).

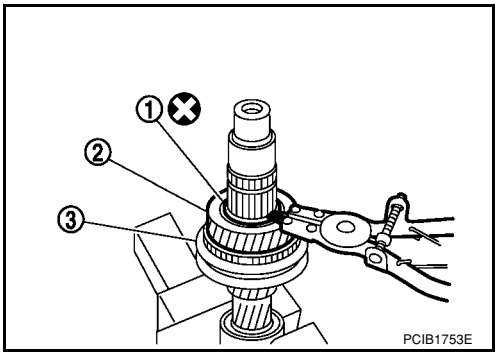

8. Remove snap ring (1), washer and 3rd input gear (2).

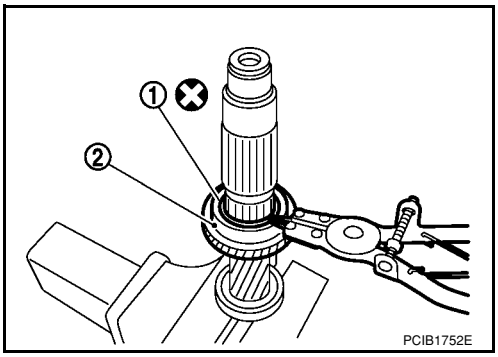

9. Remove input shaft front bearing (1) from input shaft using suitable tool.

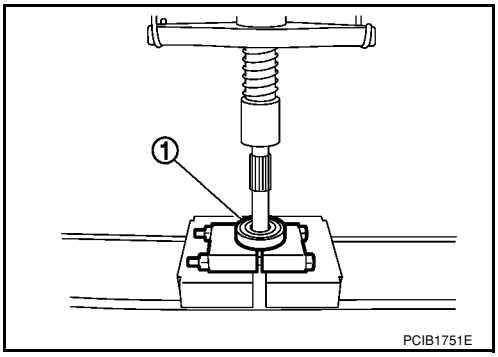

INSPECTION AFTER DISASSEMBLY

Input Shaft and Gears

Check items below. If necessary, replace them with new ones.
- Damage, peeling, dent, uneven wear, bending, and other non-standard conditions of the shaft.
- Excessive wear, damage, peeling, and other non-standard conditions of the gears.

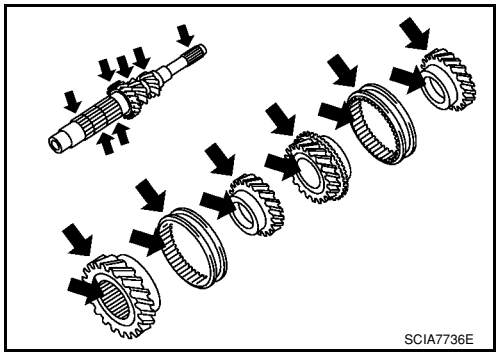

Synchronizer

Check items below. If necessary, replace them with new ones.
- Damage and excessive wear of contact surfaces of coupling sleeve, synchronizer hub and insert key.
- Coupling sleeve and synchronizer hub must move smoothly.

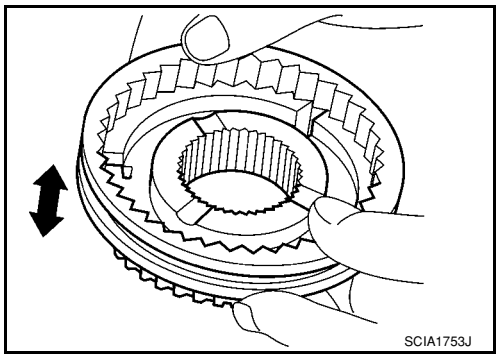

- If any crack, damage, or excessive wear is found on cam face of baulk ring or working face of insert, replace it.

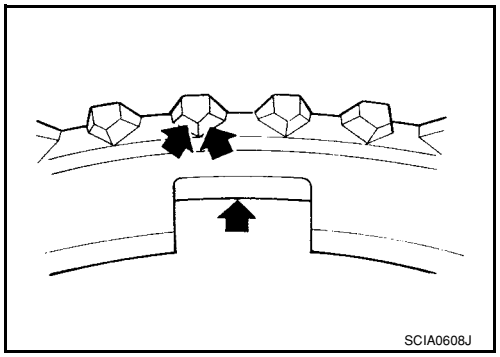

Bearing

Check for damage and rough rotation of bearing. If necessary, replace with new one.

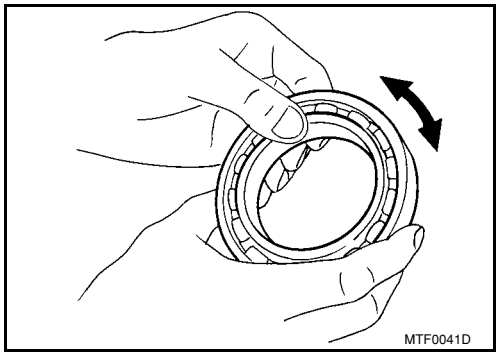

ASSEMBLY

Assembly is in the reverse order of disassembly.

- Press-fit the input shaft front bearing (1) onto the input shaft using suitable tool (A).

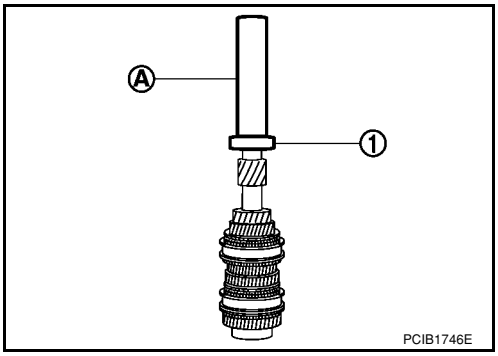

- Press-fit the input shaft rear bearing (1) onto the input shaft using suitable tool (A), and Tool (B).

Tool number : ST36720030 (—)

CAUTION:
- **Do not reuse snap ring.**
- **Make sure that snap ring is securely installed in the groove.**

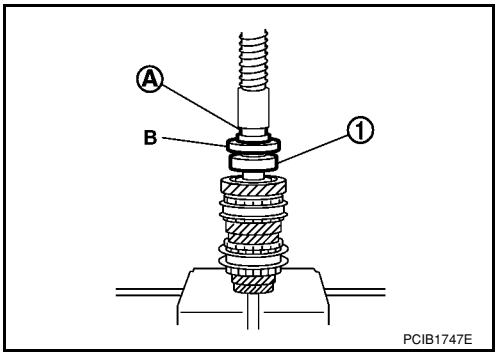

- **Be careful with the orientation of 3rd-4th synchronizer hub.**
  A: 3rd input gear side
  B: 4th input gear side

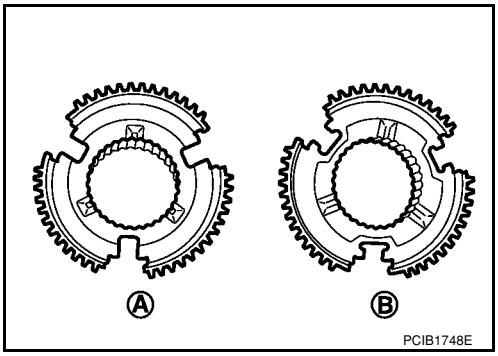

- **Be careful with the orientation of 5th-6th synchronizer hub.**
  A: 5th input gear side
  B: 6th input gear side

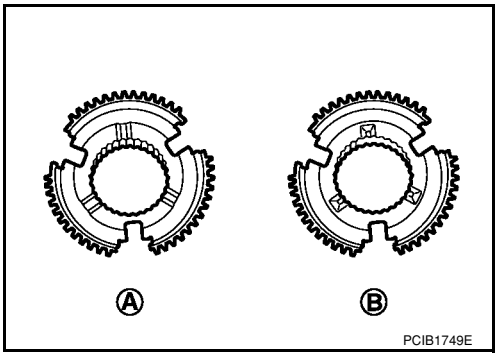

MAINSHAFT AND GEARS

Disassembly and Assembly

INFOID:0000000001703144

GENERAL PRECAUTIONS

- Do not reuse snap rings.
- Position mainshaft on the vise with back plate and remove gears and snap rings.
- For installation and removal of snap ring, position snap ring pliers and flat pliers at both sides of snap ring. Stretch snap ring, and move it with flat pliers.
- Disassemble gear components putting matching marks on the parts that do not affect any functions.

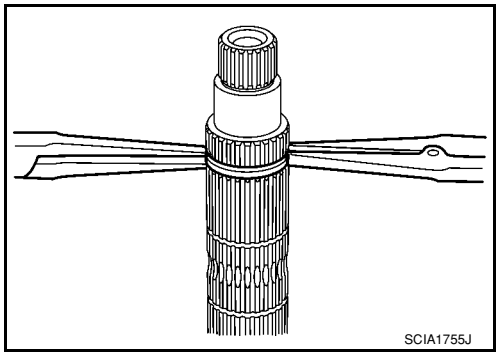

DISASSEMBLY

1. Remove snap ring (1).

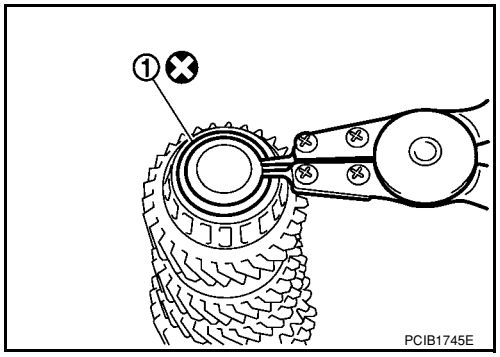

2. Install Tool (A) and suitable tool onto 6th main gear (1), and remove mainshaft rear bearing inner race (2) and 6th main gear (1) from mainshaft.

   Tool number : ST33052000 (—)

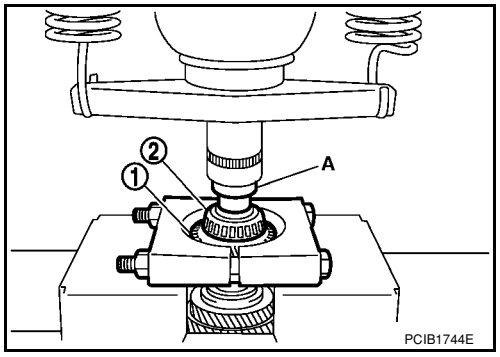

3. Install Tool (A) and suitable tool onto 4th main gear (1), and remove 5th main gear (2), and 4th main gear (1) from mainshaft.

   Tool number : ST33052000 (—)

4. Remove intermediate adjusting shim.

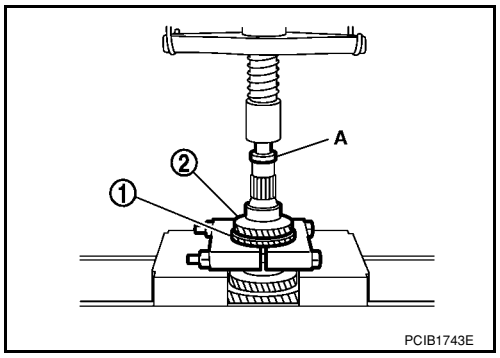

5. Install Tool (A) and suitable tool onto 1st main gear (1), and remove 1st main gear (1), 1st-2nd synchronizer assembly (2), 2nd main gear (3), bushing, and 3rd main gear (4) from mainshaft.

Tool number : ST33052000 (—)

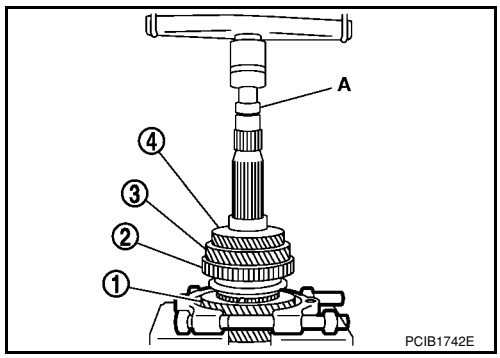

6. Install Tool (A) and suitable tool onto mainshaft front bearing inner race (1), and remove mainshaft front bearing (1) from mainshaft.

Tool number : ST33052000 (—)

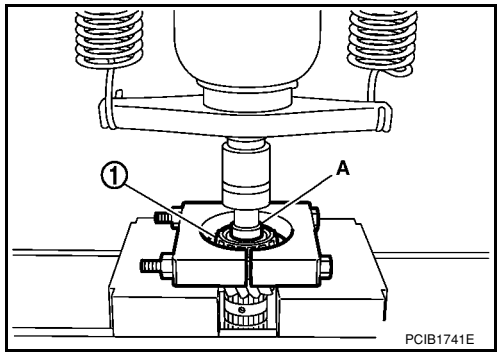

INSPECTION AFTER DISASSEMBLY

Mainshaft and Gears

Check items below. If necessary, replace them with new ones.

- Damage, peeling, dent, uneven wear, bending, and other non-standard conditions of the shaft.
- Excessive wear, damage, peeling, and other non-standard conditions of the gears.

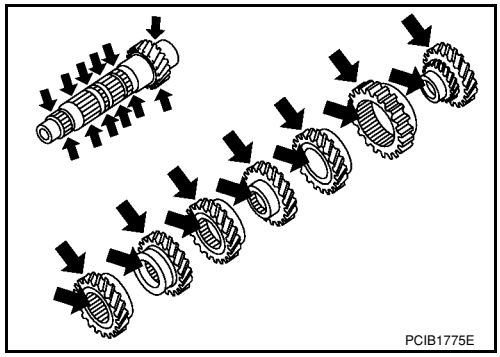

Synchronizer

Check items below. If necessary, replace them with new ones.

- Damage and excessive wear of contact surfaces of coupling sleeve, synchronizer hub, insert key.
- Coupling sleeve and synchronizer hub must move smoothly.

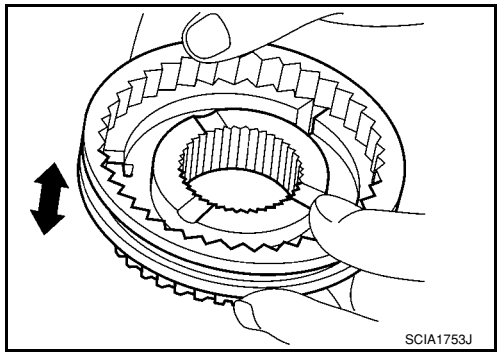

- If any crack, damage, or excessive wear is found on cam face of baulk ring or working face of insert, replace it.

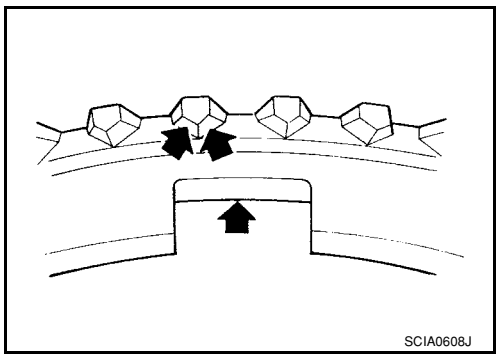

Bearing

Check bearing for damage and rough rotation. If necessary, replace with new one.

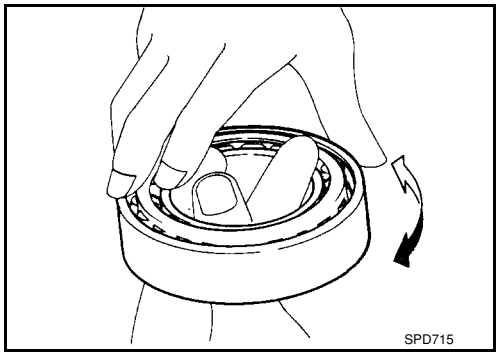

CAUTION:

Bearing preloading shim: after the intermediate adjusting shim and/or the 6th main gear, 5th main gear, and 4th main gear have been replaced, it is necessary to modify the bearing preload setting by changing the bearing preload shim.

- **When replacing tapered roller bearing, replace outer and inner races as a set.**
- **Replacing the intermediate adjusting shim.**
- **Increase the size of the bearing preload shim, if the replaced intermediate adjusting shim is thinner than the shim used before.**
- **Decrease the size of the bearing preload shim, if the replaced intermediate adjusting shim is thicker than the shim used before.**
- **Replacing the 6th main gear, 5th main gear, and 4th main gear.**
- **Measure the thickness of the main gear used before and the new main gear.**
- **Increase the thickness of the bearing preload shim, if the difference is smaller than 0.025 mm (0.0010 in).**
- **Decrease the thickness of the bearing preload shim, if the difference is greater than 0.025 mm (0.0010 in).**

ASSEMBLY

1. Press-fit the mainshaft front bearing inner race (1) onto the mainshaft using Tool (A).

Tool number : ST36720030 (—)

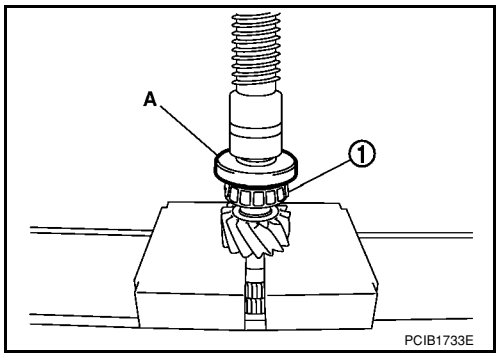

2. Install 1st main gear (1), and 1st-2nd synchronizer assembly (2) onto the mainshaft.
3. Press-fit the bushing (3) onto the mainshaft using Tool (A).

Tool number : KV32102700 (—)

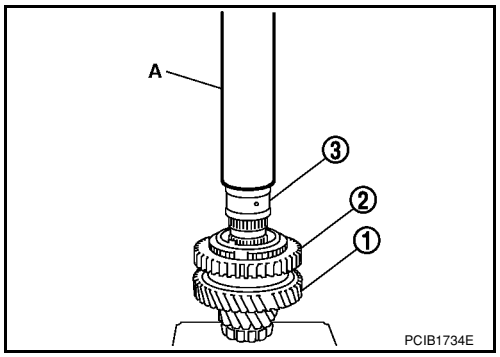

4. Press-fit 3rd main gear (1) onto the mainshaft with Tool (A) after installing the 2nd main gear (2) and the 3rd main gear (1) onto the mainshaft.

Tool number : KV32102700 (—)

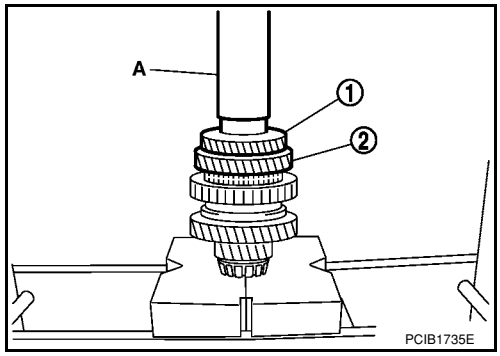

5. Select the thickness of the intermediate adjusting shim (1) needed by measuring the distance “L” between the base of the mainshaft (2) and the top of the 3rd main gear (3). Refer to the following table to determine the thickness of the adjusting shim.

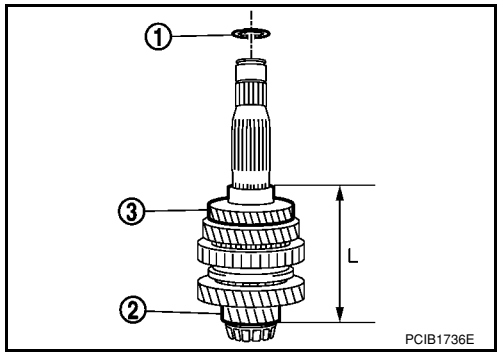

Unit: mm (in)

Distance “L”	Adjusting shim thickness
147.690 – 147.666 (5.8146 – 5.8136)	1.500 (0.0591)
147.665 – 147.641 (5.8136 – 5.8126)	1.525 (0.0600)
147.640 – 147.616 (5.8126 – 5.8116)	1.550 (0.0610)
147.615 – 147.591 (5.8116 – 5.8107)	1.575 (0.0620)
147.590 – 147.566 (5.8106 – 5.8097)	1.600 (0.0630)
147.565 – 147.541 (5.8096 – 5.8087)	1.625 (0.0640)
147.540 – 147.516 (5.8086 – 5.8077)	1.650 (0.0650)
147.515 – 147.491 (5.8077 – 5.8067)	1.675 (0.0659)
147.490 – 147.466 (5.8067 – 5.8057)	1.700 (0.0669)
147.465 – 147.441 (5.8057 – 5.8048)	1.725 (0.0679)
147.440 – 147.416 (5.8047 – 5.8038)	1.750 (0.0689)
147.415 – 147.391 (5.8037 – 5.8028)	1.775 (0.0699)

6. Install selected intermediate adjusting shim.
7. Press-fit the 4th main gear (1) onto the mainshaft using Tool (A).

Tool number : KV32102700 (—)

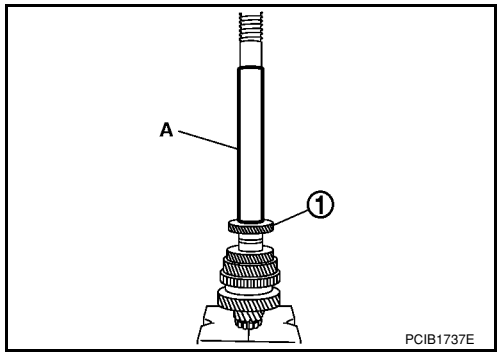

8. Press-fit the 5th main gear (1) onto the mainshaft using Tool (A).

Tool number : KV32102700 (—)

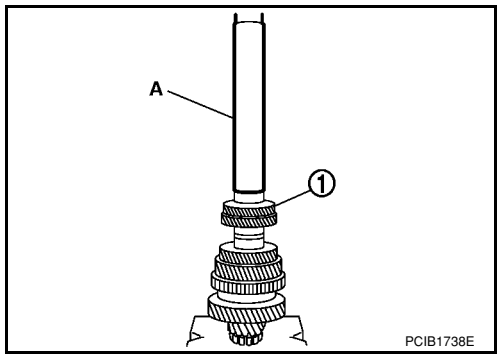

9. Press-fit the 6th main gear (1) onto the mainshaft using Tool (A).

Tool number : KV32102700 (—)

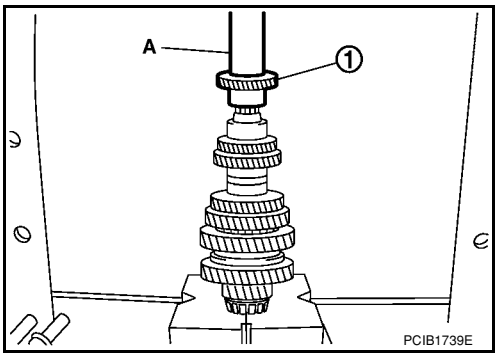

10. Press-fit the mainshaft rear bearing inner race (1) onto the mainshaft using Tool (A).

Tool number : ST30901000 (J-26010-01)

11. Install snap ring onto mainshaft.

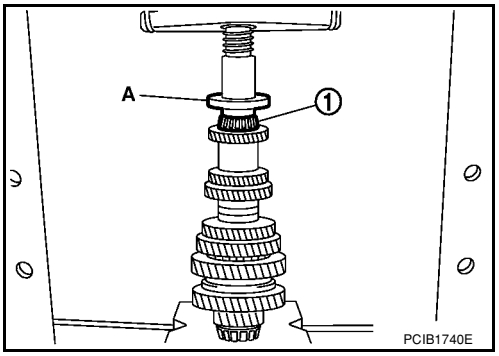

REVERSE IDLER SHAFT AND GEARS

Disassembly and Assembly

INFOID:0000000001703145

DISASSEMBLY

1. Remove reverse output gear (1).

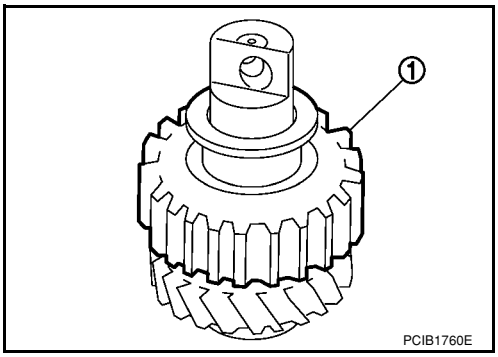

2. Remove snap ring (1).

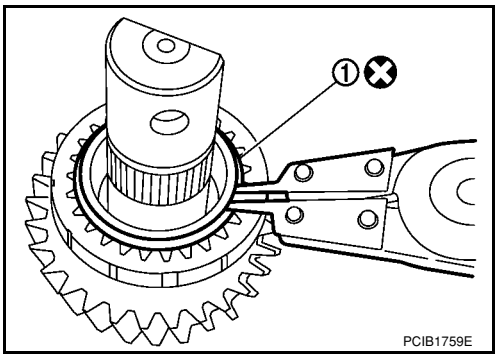

3. Remove reverse baulk ring (1) and return spring (2).

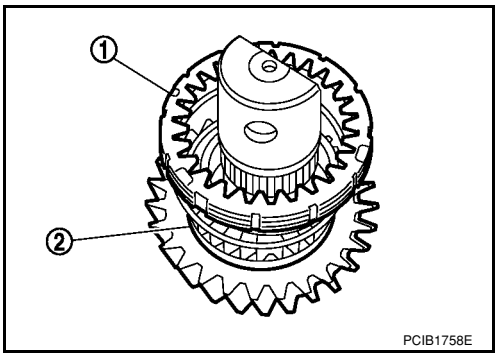

4. Remove snap ring (1), lock washer (2), reverse input gear (3) and washer.

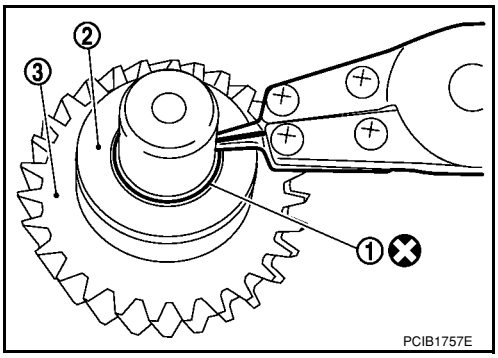

5. Remove needle bearings (1) from reverse idler shaft.

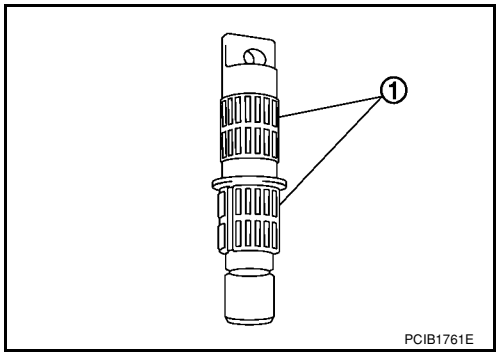

ASSEMBLY

Assembly is in the reverse order of disassembly.

CAUTION:

- **Do not reuse snap ring.**
- **Make sure that snap ring is securely installed in the groove.**

FINAL DRIVE

Disassembly and Assembly

INFOID:0000000001703146

DISASSEMBLY

1. Remove differential side bearing inner race (clutch housing side) (1) using Tool (A) and suitable tool.

   Tool number : ST33061000 (J-8107-2)

2. Remove speedometer drive gear.

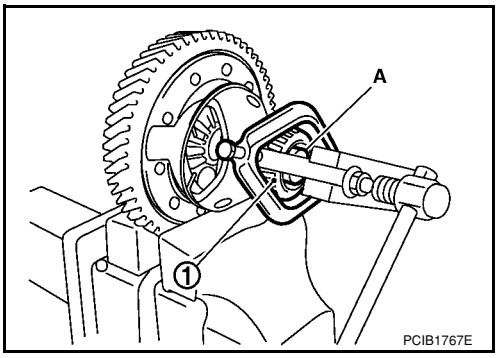

3. Remove final gear bolts (1), and then separate the final gear (2) from differential case.

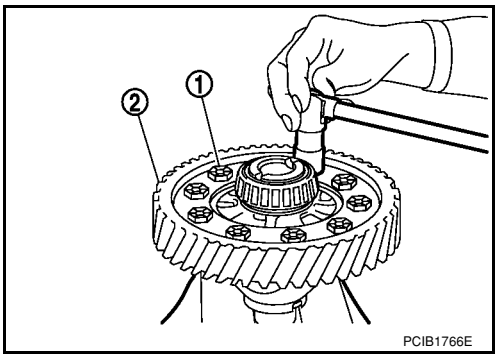

4. Remove differential side bearing inner race (transaxle case side) (1) using suitable tool (A).

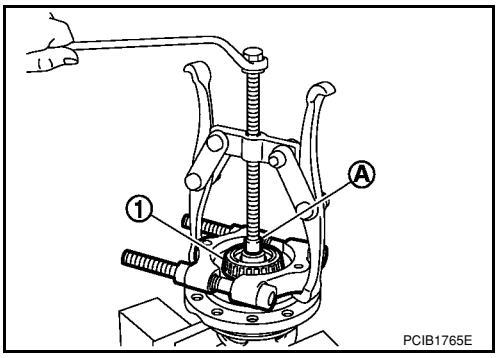

5. Remove lock ring (1) from differential case.
6. Remove pinion mate shaft, pinion mate gears, side gears and thrust washer from differential case.

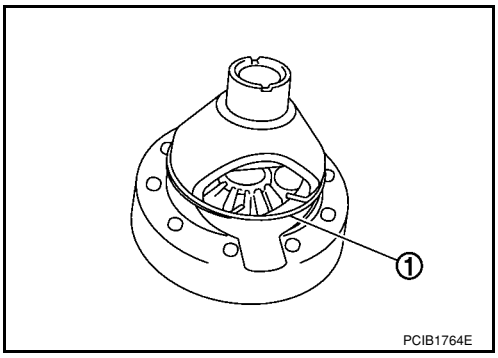

INSPECTION AFTER DISASSEMBLY

Gear, Washer, Shaft and Case

- Check side gears, thrust washer, pinion mate shaft, pinion mate gears, lock ring and differential case. If necessary, replace with a new one.

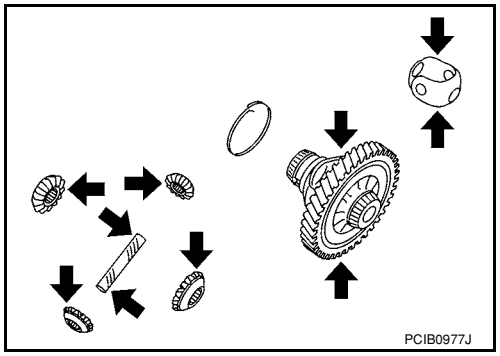

Bearing

Check for bearing damage and rough rotation. If necessary, replace with a new one.

CAUTION:

When replacing tapered roller bearing, replace outer and inner races as a set.

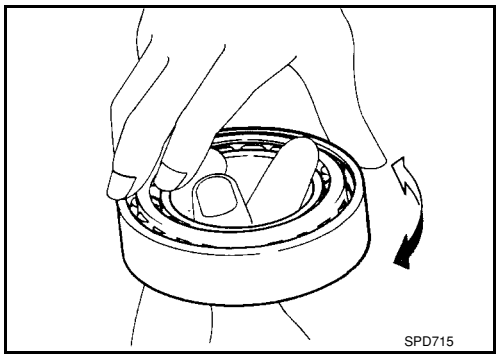

ASSEMBLY

1. Install pinion mate shaft, pinion mate gears, side gears and thrust washer into differential case.
2. Install lock ring (1) onto differential case.

   CAUTION:

   Make sure that lock ring is securely installed in the groove.
3. Install final gear into differential case, and tighten final gear bolts to specification. Refer to MT-17, "Disassembly and Assembly".
4. Install speedometer drive gear onto differential case.

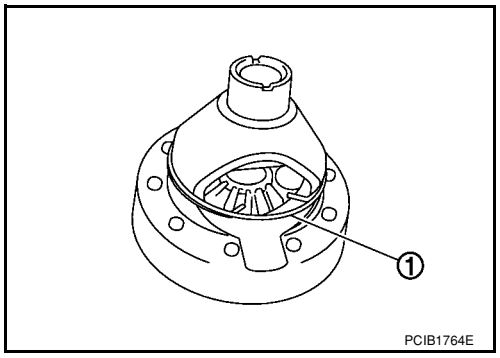

5. Press-fit the differential side bearing inner race (clutch housing side) onto the differential case using suitable tool (A).

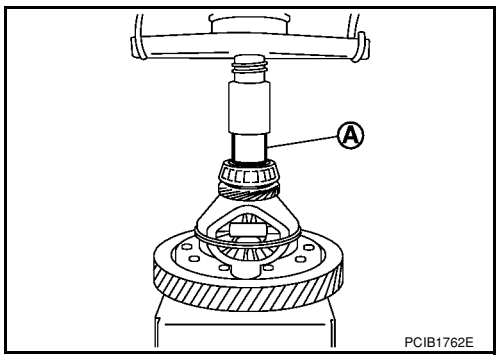

6. Press-fit the differential side bearing inner race (transaxle case side) onto the differential case using suitable tool (A).

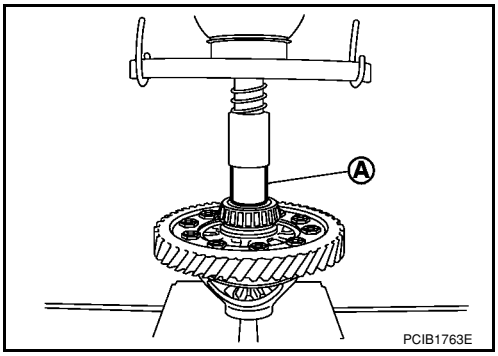

SHIFT CONTROL

Inspection

INFOID:0000000001703147

Check contact surface and sliding surface of fork rod and shift fork for wear, damage, and bend. Replace if necessary.

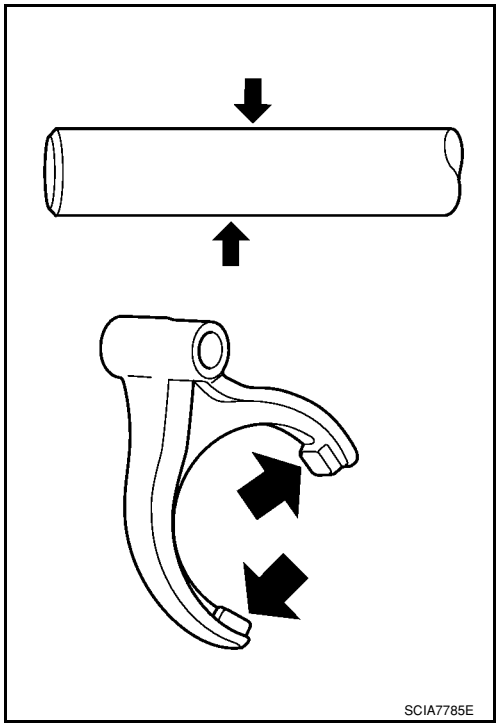

SERVICE DATA AND SPECIFICATIONS (SDS)

General Specification

INFOID:0000000001703148

Engine type			MR18DE
Transaxle model			RS6F94R
Number of speeds			6
Synchromesh type			Warner
Shift pattern			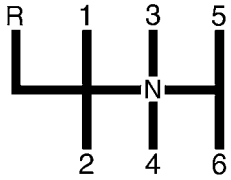 PCIB1769E
Gear ratio	1st		3.727
	2nd		2.105
	3rd		1.452
	4th		1.171
	5th		0.971
	6th		0.811
	Reverse		3.687
	Final gear		3.933
Number of teeth	Input gear	1st	11
		2nd	19
		3rd	31
		4th	35
		5th	35
		6th	37
		Reverse	11
	Main gear	1st	41
		2nd	40
		3rd	45
		4th	41
		5th	34
		6th	30
		Reverse	42
	Reverse idler gear	Input/Output	28/29
	Final gear	Final gear/Pinion	59/15
		Side gear/Pinion mate gear	21/18
Oil capacity		ℓ (US pt, Imp pt)	Approx. 2.0 (4-1/4, 3-1/2)
Remarks	Reverse synchronizer		Installed
	Triple-cone synchronizer		1st and 2nd

SECTION MTC

MANUAL AIR CONDITIONER

CONTENTS

SERVICE INFORMATION 3

PRECAUTIONS 3
- Precaution for Supplemental Restraint System (SRS) "AIR BAG" and "SEAT BELT PRE-TENSIONER" 3
- Precaution for Procedure without Cowl Top Cover 3
- Precaution for Working with HFC-134a (R-134a) 3
- General Refrigerant Precaution 4
- Oil Precaution 4
- Precaution for Refrigerant Connection 4
- Precaution for Service of Compressor 7
- Precaution for Service Equipment 7
- Precaution for Leak Detection Dye 9

PREPARATION 10
- Special Service Tool 10
- HFC-134a (R-134a) Service Tool and Equipment 10
- Commercial Service Tool 13

REFRIGERATION SYSTEM 14
- Refrigerant Cycle 14
- Refrigerant System Protection 14
- Component Part Location 15

OIL 16
- Maintenance of Oil Quantity in Compressor 16

AIR CONDITIONER CONTROL 19
- Control Operation 19
- Discharge Air Flow 20
- System Description 20
- CAN Communication System Description 21

TROUBLE DIAGNOSIS 22
- CONSULT-III Function (BCM) 22
- How to Perform Trouble Diagnosis for Quick and Accurate Repair 22
- Component Parts and Harness Connector Location 23
- Schematic 25
- Wiring Diagram - Heater - 26
- Wiring Diagram - A/C,M - 27
- Operational Check 30
- Mode Door 31
- Air Mix Door 32
- Intake Door 33
- Front Blower Motor Circuit 33
- Magnet Clutch Circuit (If Equipped) 37
- Insufficient Cooling 45
- Insufficient Heating 52
- Noise 53

CONTROLLER 55
- Removal and Installation 55
- Disassembly and Assembly 56

THERMO CONTROL AMPLIFIER 57
- Removal and Installation 57

A/C UNIT ASSEMBLY 58
- Removal and Installation 58
- Disassembly and Assembly 60

BLOWER MOTOR 62
- Removal and Installation 62

INTAKE DOOR 63
- Intake Door Cable Adjustment 63

AIR MIX DOOR 64
- Air Mix Door Cable Adjustment 64

MODE DOOR 65
- Mode Door Cable Adjustment 65

BLOWER FAN RESISTOR 66
- Removal and Installation 66

HEATER CORE 67
- Removal and Installation 67

AIR CONDITIONER FILTER 68
- Removal and Installation 68

DUCTS AND GRILLES 69
Removal and Installation 69

REFRIGERANT LINES 74
HFC-134a (R-134a) Service Procedure 74
Component 76
Removal and Installation of Compressor 78
Removal and Installation of Low-Pressure Flexible Hose 79
Removal and Installation of High-pressure Flexible Hose 80
Removal and Installation of High-pressure Pipe ... 81
Removal and Installation of Refrigerant Pressure Sensor 81
Removal and Installation of Condenser 82
Removal and Installation of Liquid Tank 82
Removal and Installation of Evaporator 83
Removal and Installation of Expansion Valve 84
Checking of Refrigerant Leaks 84
Checking System for Leaks Using the Fluorescent Leak Detector 85
Dye Injection 85
Electronic Refrigerant Leak Detector 85

SERVICE DATA AND SPECIFICATIONS (SDS) 88
Compressor 88
Oil 88
Refrigerant 88
Engine Idling Speed 88
Belt Tension 88

SERVICE INFORMATION

PRECAUTIONS

Precaution for Supplemental Restraint System (SRS) "AIR BAG" and "SEAT BELT PRE-TENSIONER"

INFOID:0000000001704274

The Supplemental Restraint System such as “AIR BAG” and “SEAT BELT PRE-TENSIONER”, used along with a front seat belt, helps to reduce the risk or severity of injury to the driver and front passenger for certain types of collision. This system includes seat belt switch inputs and dual stage front air bag modules. The SRS system uses the seat belt switches to determine the front air bag deployment, and may only deploy one front air bag, depending on the severity of a collision and whether the front occupants are belted or unbelted.
Information necessary to service the system safely is included in the SRS and SB section of this Service Manual.

WARNING:

- **To avoid rendering the SRS inoperative, which could increase the risk of personal injury or death in the event of a collision which would result in air bag inflation, all maintenance must be performed by an authorized NISSAN/INFINITI dealer.**
- **Improper maintenance, including incorrect removal and installation of the SRS, can lead to personal injury caused by unintentional activation of the system. For removal of Spiral Cable and Air Bag Module, see the SRS section.**
- **Do not use electrical test equipment on any circuit related to the SRS unless instructed to in this Service Manual. SRS wiring harnesses can be identified by yellow and/or orange harnesses or harness connectors.**

Precaution for Procedure without Cowl Top Cover

INFOID:0000000001704275

When performing the procedure after removing cowl top cover, cover the lower end of windshield with urethane, etc.

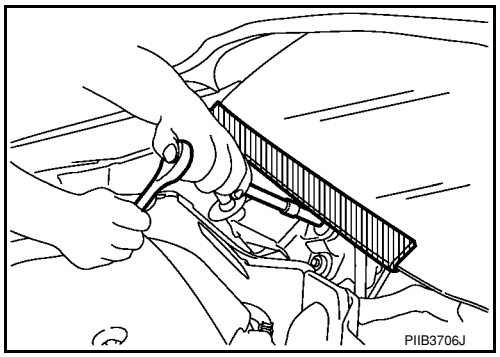

Precaution for Working with HFC-134a (R-134a)

INFOID:0000000001704276

WARNING:

- **CFC-12 (R-12) refrigerant and HFC-134a (R-134a) refrigerant are not compatible. These refrigerants must never be mixed, even in the smallest amounts. If the refrigerants are mixed a compressor malfunction is likely to occur.**
- **Use only specified oil for the HFC-134a (R-134a) A/C system and HFC-134a (R-134a) components. If oil other than that specified is used, compressor malfunction is likely to occur.**
- **The specified HFC-134a (R-134a) oil rapidly absorbs moisture from the atmosphere. The following handling precautions must be observed:**

- **When removing refrigerant components from a vehicle, immediately cap (seal) the component to minimize the entry of moisture from the atmosphere.**
- **When installing refrigerant components to a vehicle, do not remove the caps (unseal) until just before connecting the components. Connect all refrigerant loop components as quickly as possible to minimize the entry of moisture into system.**
- **Only use the specified oil from a sealed container. Immediately reseal containers of oil. Without proper sealing, oil will become moisture saturated and should not be used.**
- **Avoid breathing A/C refrigerant and oil vapor or mist. Exposure may irritate eyes, nose and throat. Use only approved recovery/recycling equipment to discharge HFC-134a (R-134a) refrigerant. If accidental system discharge occurs, ventilate work area before resuming service. Additional health and safety information may be obtained from refrigerant and oil manufacturers.**

- **Do not allow A/C oil to come in contact with styrofoam parts. Damage may result.**

General Refrigerant Precaution

INFOID:0000000001704277

WARNING:

- **Avoid breathing A/C refrigerant and oil vapor or mist. Exposure may irritate eyes, nose and throat. Use only approved recovery/recycling equipment to discharge HFC-134a (R-134a) refrigerant. If accidental system discharge occurs, ventilate work area before resuming service. Additional health and safety information may be obtained from refrigerant and oil manufacturers.**
- **Do not release refrigerant into the air. Use approved recovery/recycling equipment to capture the refrigerant every time an air conditioning system is discharged.**
- **Always wear eye and hand protection (goggles and gloves) when working with any refrigerant or air conditioning system.**
- **Do not store or heat refrigerant containers above 52°C (126° F).**
- **Do not heat a refrigerant container with an open flame; if container warming is required, place the bottom of the container in a warm pail of water.**
- **Do not intentionally drop, puncture, or incinerate refrigerant containers.**
- **Keep refrigerant away from open flames: poisonous gas will be produced if refrigerant burns.**
- **Refrigerant will displace oxygen, therefore be certain to work in well ventilated areas to prevent suffocation.**
- **Do not pressure test or leak test HFC-134a (R-134a) service equipment and/or vehicle air conditioning systems with compressed air during repair. Some mixtures of air and HFC-134a (R-134a) have been shown to be combustible at elevated pressures. These mixtures, if ignited, may cause injury or property damage. Additional health and safety information may be obtained from refrigerant manufacturers.**

Oil Precaution

INFOID:0000000001704278

- Use only specified oil for the HFC-134a (R-134a) A/C system and HFC-134a (R-134a) components. If oil other than that specified is used, compressor malfunction is likely to occur.
- The specified HFC-134a (R-134a) oil rapidly absorbs moisture from the atmosphere. The following handling precautions must be observed:
- When removing refrigerant components from a vehicle, immediately cap (seal) the component to minimize the entry of moisture from the atmosphere.
- When installing refrigerant components to a vehicle, do not remove the caps (unseal) until just before connecting the components. Connect all refrigerant loop components as quickly as possible to minimize the entry of moisture into system.
- Only use the specified oil from a sealed container. Immediately reseal containers of oil. Without proper sealing, oil will become moisture saturated and should not be used.
- Avoid breathing A/C refrigerant and oil vapor or mist. Exposure may irritate eyes, nose and throat.
  Use only approved recovery/recycling equipment to discharge HFC-134a (R-134a) refrigerant. If accidental system discharge occurs, ventilate work area before resuming service. Additional health and safety information may be obtained from refrigerant and oil manufacturers.
- Do not allow A/C oil to come in contact with styrofoam parts. Damage may result.

Precaution for Refrigerant Connection

INFOID:0000000001704279

A new type refrigerant connection has been introduced to all refrigerant lines except the following location.

- Expansion valve to evaporator
- Refrigerant pressure sensor to condenser

FEATURES OF NEW TYPE REFRIGERANT CONNECTION

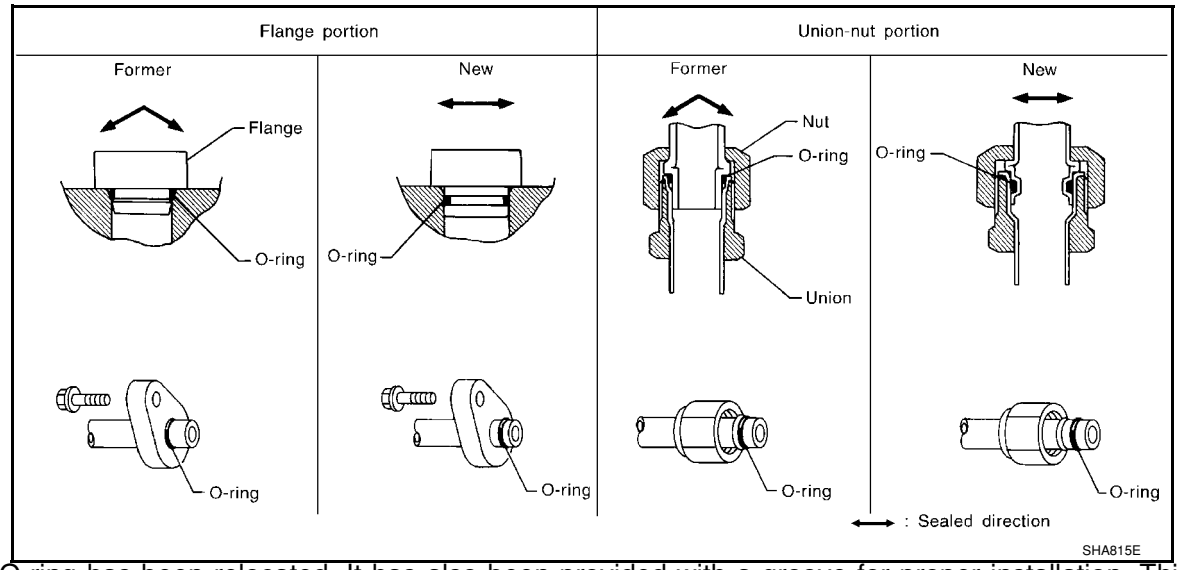

- The O-ring has been relocated. It has also been provided with a groove for proper installation. This eliminates the chance of the O-ring being caught in, or damaged by, the mating part. The sealing direction of the O-ring is now set vertically in relation to the contacting surface of the mating part to improve sealing characteristics.
- The reaction force of the O-ring will not occur in the direction that causes the joint to pull out, thereby facilitating piping connections.

O-RING AND REFRIGERANT CONNECTION

TYPE 1

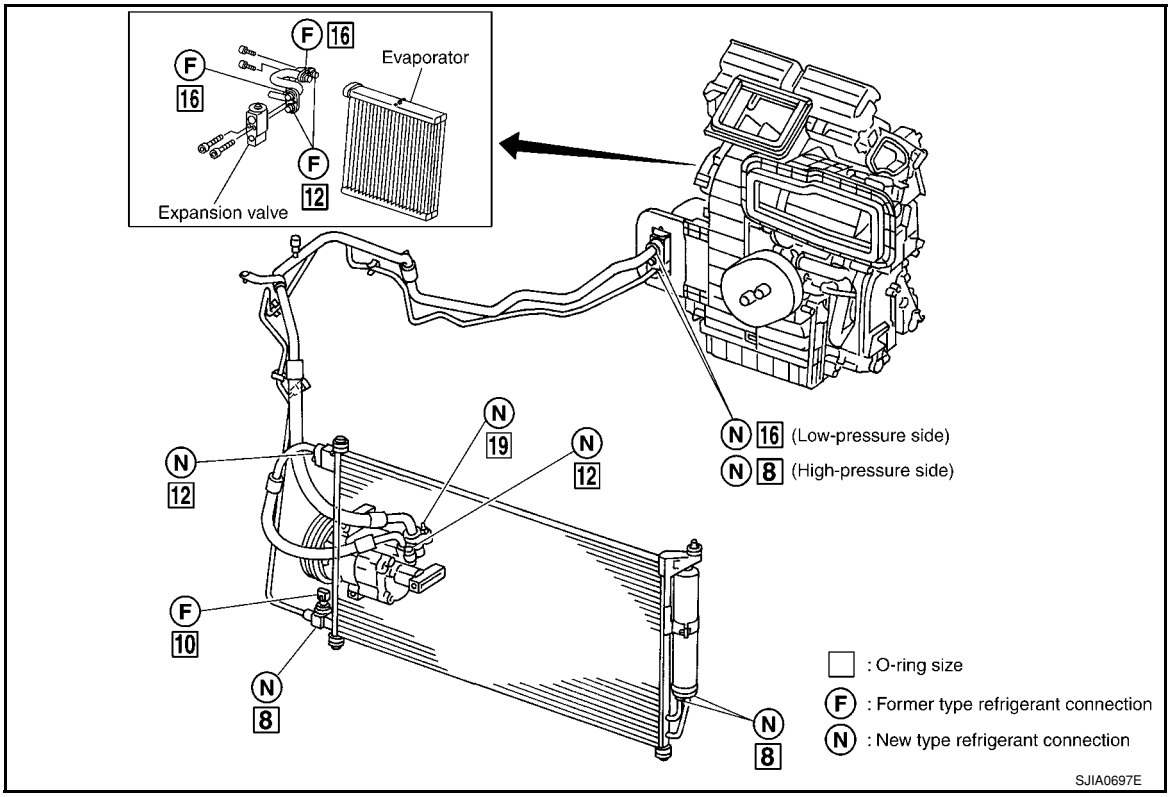

TYPE 2

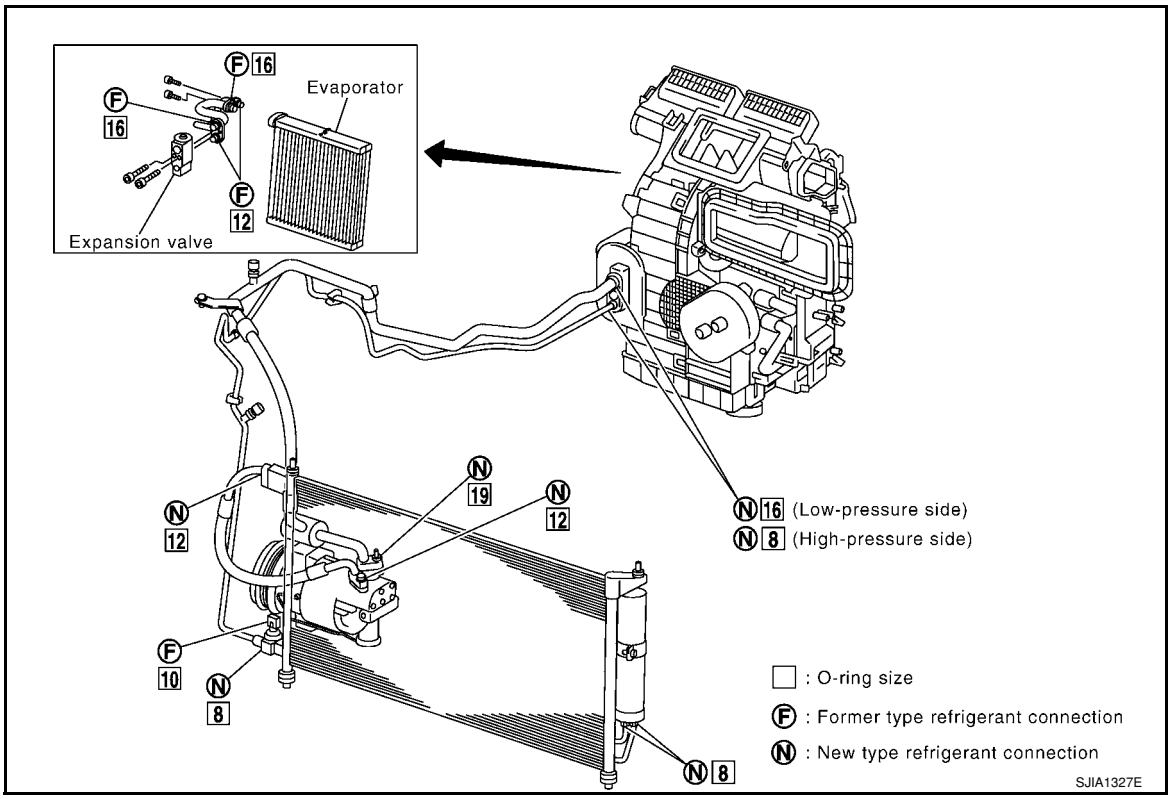

WARNING:

Make sure all refrigerant is discharged into the recycling equipment and the pressure in the system is less than atmospheric pressure. Then gradually loosen the discharge side hose fitting and remove it.

CAUTION:

The new and former refrigerant connections use different O-ring configurations. Do not confuse O-rings since they are not interchangeable. If a wrong O-ring is installed, refrigerant will leak at, or around, the connection.

O-Ring Part Numbers and Specifications

Connection type	Piping connection point		Part number	QTY	O-ring size
New	Condenser to high-pressure flexible hose		92472 N8210	1	12
	Condenser to high-pressure pipe		92471 N8210	1	8
	Low-pressure flexible hose to expansion valve		92473 N8210	1	16
	High-pressure pipe to expansion valve		92471 N8210	1	8
	Compressor to low-pressure flexible hose		92474 N8210	1	19
	Compressor to high-pressure flexible hose		92472 N8210	1	12
	Liquid tank to condenser pipe	Inlet	92471 N8210	1	8
		Outlet		1	
Former	Refrigerant pressure sensor to condenser		J2476 89956	1	10
	Expansion valve to evaporator	Inlet	92471 N8200	2	12
		Outlet	92473 N8200	2	16

CAUTION:

When replacing or cleaning refrigerant cycle components, observe the following.

- **When the compressor is removed, store it in the same position as it is when mounted on the vehicle. Doing so will cause oil to enter the low-pressure chamber.**
- **When connecting tubes, always use a torque wrench and a back-up wrench.**
- **After disconnecting tubes, immediately plug all openings to prevent entry of dirt and moisture.**
- **When installing an air conditioner in the vehicle, connect the pipes as the final stage of the operation. Do not remove the seal caps of pipes and other components until just before required for connection.**

- **Allow components stored in cool areas to warm to working area temperature before removing seal caps. This prevents condensation from forming inside A/C components.**
- **Thoroughly remove moisture from the refrigeration system before charging the refrigerant.**
- **Always replace used O-rings.**
- **When connecting tube, apply the specified A/C oil to circle of the O-rings as shown. Be careful not to apply oil to threaded portion. Refer to MTC-88, "Oil".**
- **O-ring must be closely attached to dented portion of tube.**
- **When replacing the O-ring, be careful not to damage O-ring and tube.**
- **Connect tube until you hear it click, then tighten the nut or bolt by hand until snug. Make sure that the O-ring is installed to tube correctly.**
- **After connecting line, perform leak test and make sure that there is no leakage from connections. When the refrigerant leaking point is found, disconnect that line and replace the O-ring. Then tighten connections of seal seat to the specified torque.**

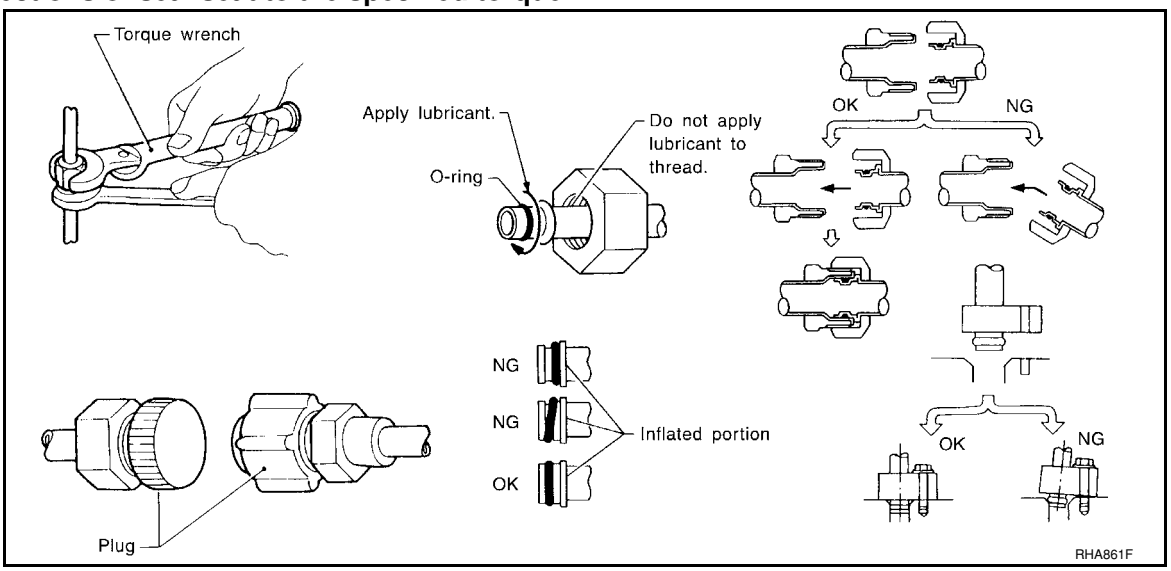

Precaution for Service of Compressor

INFOID:0000000001704280

- **Plug all openings to prevent moisture and foreign matter from entering.**
- **When the compressor is removed, store it in the same position as it is when mounted on the car.**
- **When replacing or repairing compressor, follow “Maintenance of Oil Quantity in Compressor” exactly. Refer to MTC-16, "Maintenance of Oil Quantity in Compressor" .**
- **Keep friction surfaces between clutch and pulley clean. If the surface is contaminated, with oil, wipe it off by using a clean waste cloth moistened with thinner.**
- **After compressor service operation, turn the compressor shaft by hand more than five turns in both directions. This will equally distribute oil inside the compressor. After the compressor is installed, let the engine idle and operate the compressor for one hour.**
- **After replacing the compressor magnet clutch, apply voltage to the new one and check for usual operation.**

Precaution for Service Equipment

INFOID:0000000001704281

RECOVERY/RECYCLING EQUIPMENT

Be certain to follow the manufacturer’s instructions for machine operation and machine maintenance. Never introduce any refrigerant other than that specified into the machine.

ELECTRONIC LEAK DETECTOR

Be certain to follow the manufacturer’s instructions for tester operation and tester maintenance.

VACUUM PUMP

The oil contained inside the vacuum pump is not compatible with the specified oil for HFC-134a (R-134a) A/C systems. The vent side of the vacuum pump is exposed to atmospheric pressure. So the vacuum pump oil may migrate out of the pump into the service hose. This is possible when the pump is switched off after evacuation (vacuuming) and hose is connected to it.

To prevent this migration, use a manual valve placed near the hose-to-pump connection, as follows.

- Usually vacuum pumps have a manual isolator valve as part of the pump. Close this valve to isolate the service hose from the pump.
- For pumps without an isolator, use a hose equipped with a manual shut-off valve near the pump end. Close the valve to isolate the hose from the pump.
- If the hose has an automatic shut-off valve, disconnect the hose from the pump. As long as the hose is connected, the valve is open and lubricating oil may migrate.

Some one-way valves open when vacuum is applied and close under a no vacuum condition. Such valves may restrict the pump's ability to pull a deep vacuum and are not recommended.

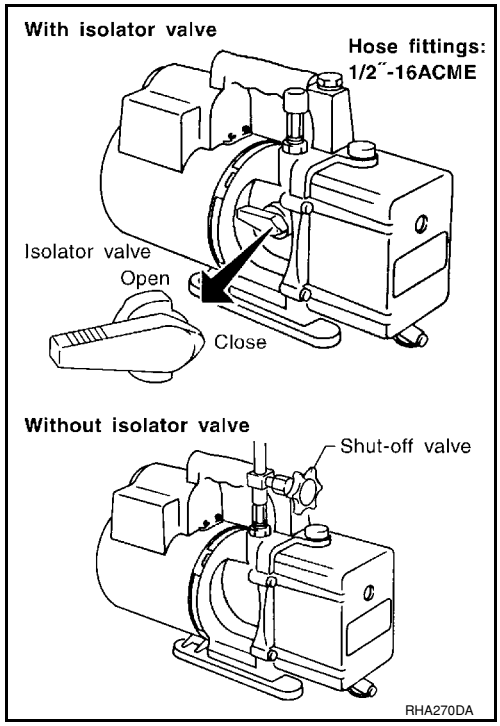

MANIFOLD GAUGE SET

Be certain that the gauge face indicates HFC-134a or R-134a. Be sure the gauge set has 1/2″-16 ACME threaded connections for service hoses. Confirm the set has been used only with refrigerant HFC-134a (R-134a) and specified oils.

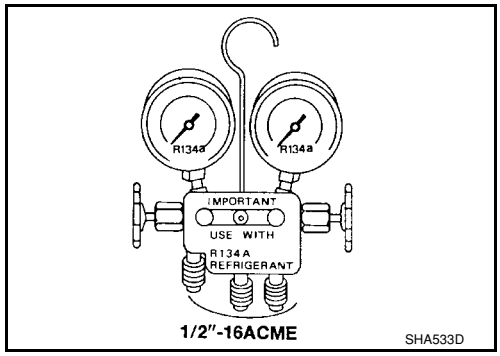

SERVICE HOSES

Be certain that the service hoses display the markings described (colored hose with black stripe). All hoses must include positive shut-off devices (either manual or automatic) near the end of the hoses opposite the manifold gauge.

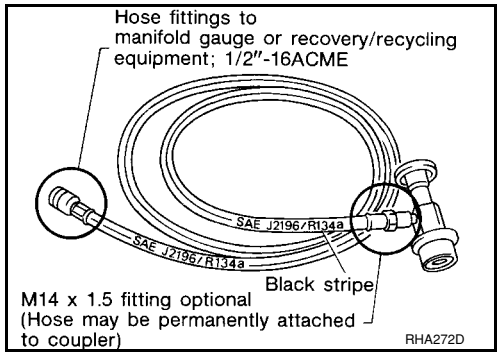

SERVICE COUPLERS

Never attempt to connect HFC-134a (R-134a) service couplers to a CFC-12 (R-12) A/C system. The HFC-134a (R-134a) couplers will not properly connect to the CFC-12 (R-12) system. However, if an improper connection is attempted, discharging and contamination may occur.

Shut-off valve rotation	A/C service valve
Clockwise	Open
Counterclockwise	Close

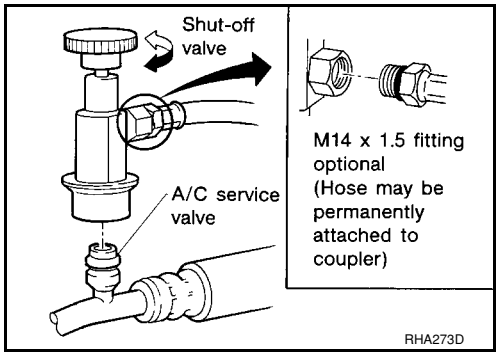

REFRIGERANT WEIGHT SCALE

Verify that no refrigerant other than HFC-134a (R-134a) and specified oils have been used with the scale. If the scale controls refrigerant flow electronically, the hose fitting must be 1/2″-16 ACME.

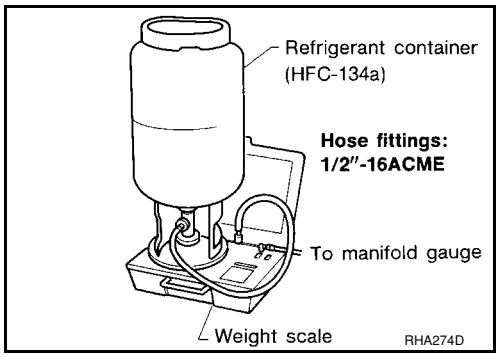

CHARGING CYLINDER

Using a charging cylinder is not recommended. Refrigerant may be vented into air from cylinder's top valve when filling the cylinder with refrigerant. Also, the accuracy of the cylinder is generally less than that of an electronic scale or of quality recycle/recharge equipment.

Precaution for Leak Detection Dye

INFOID:0000000001704282

- The A/C system contains a fluorescent leak detection dye used for locating refrigerant leaks. An ultraviolet (UV) lamp is required to illuminate the dye when inspecting for leaks.
- Always wear fluorescence enhancing UV safety goggles to protect your eyes and enhance the visibility of the fluorescent dye.
- The fluorescent dye leak detector is not a replacement for an electronic refrigerant leak detector. The fluorescent dye leak detector should be used in conjunction with an electronic refrigerant leak detector to pinpoint refrigerant leaks.
- For your safety and your customer's satisfaction, read and follow all manufacture's operating instructions and precautions prior to performing the work.
- A compressor shaft seal should not be repaired because of dye seepage. The compressor shaft seal should only be repaired after confirming the leak with an electronic refrigerant leak detector.
- Always remove any remaining dye from the leak area after repairs are complete to avoid a misdiagnosis during a future service.
- Do not allow dye to come into contact with painted body panels or interior components. If dye is spilled, clean immediately with the approved dye cleaner. Fluorescent dye left on a surface for an extended period of time cannot be removed.
- Do not spray the fluorescent dye cleaning agent on hot surfaces (engine exhaust manifold, etc.).
- Do not use more than one refrigerant dye bottle (1/4 ounce /7.4 cc) per A/C system.
- Leak detection dyes for HFC-134a (R-134a) and CFC-12 (R-12) A/C systems are different. Do not use HFC-134a (R-134a) leak detection dye in CFC-12 (R-12) A/C system or CFC-12 (R-12) leak detector dye in HFC-134a (R-134a) A/C system or A/C system damage may result.
- The fluorescent properties of the dye will remain for over three (3) years unless a compressor malfunction occurs.

IDENTIFICATION LABEL FOR VEHICLE

Vehicles with factory installed fluorescent dye have this identification label on the front side of hood.

NOTE:

- Vehicles with factory installed fluorescent dye have a green label.
- Vehicles without factory installed fluorescent dye have a blue label.

PREPARATION

Special Service Tool

INFOID:0000000001704283

The actual shapes of Kent-Moore tools may differ from those of special service tools illustrated here.

Tool number (Kent-Moore No.) Tool name	Description
— (J-38873-A) Pulley installer 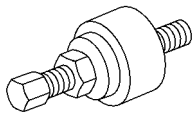 LHA171	Installing pulley
KV99233130 (J-29884) Pulley puller 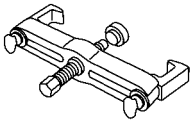 LHA172	Removing pulley

HFC-134a (R-134a) Service Tool and Equipment

INFOID:0000000001704284

Never mix HFC-134a refrigerant and/or its specified oil with CFC-12 (R-12) refrigerant and/or its oil.
Separate and non-interchangeable service equipment must be used for handling each type of refrigerant/oil.
Refrigerant container fittings, service hose fittings and service equipment fittings (equipment which handles refrigerant and/or oil) are different between CFC-12 (R-12) and HFC-134a (R-134a). This is to avoid mixed use of the refrigerants/oil.
Adapters that convert one size fitting to another must never be used refrigerant/oil contamination will occur and compressor failure will result.

Tool number (Kent-Moore No.) Tool name	Description
HFC-134a (R-134a) (—) Refrigerant 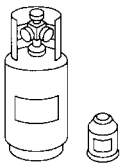 S-NT196	Container color: Light blue Container marking: HFC-134a (R-134a) Fitting size: Thread size • large container 1/2”-16 ACME
— (—) NISSAN A/C System Oil Type S S-NT197	Type: Poly Alkylene glycol oil (PAG), type S Application: HFC-134a (R-134a) variable displacement swash plate compressors (NISSAN only)

Tool number (Kent-Moore No.) Tool name		Description
— (—) NISSAN A/C System Oil Type R	 S-NT197	Type: Poly Alkylene glycol oil (PAG), type R Application: HFC-134a (R-134a) vane rotary compressors (NISSAN only)
KV991J0130 (ACR2005-NI) ACR5 A/C Service Center	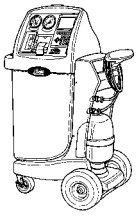 WJIA0293E	Refrigerant recovery, recycling and recharging
— (J-41995) Electronic refrigerant leak detector	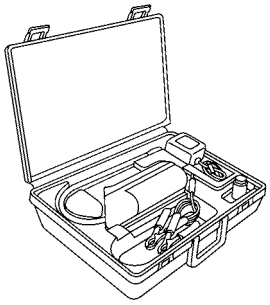 AHA281A	Checking for refrigerant leaks Power supply: DC 12V (battery terminal)
— (J-43926) Refrigerant dye leak detection kit Kit includes: (J-42220) UV lamp and UV safety goggles (J-41459) Refrigerant dye injector (J-41447) Quantity 24, 1/4 ounce bottles of HFC-134a (R-134a) fluorescent leak detection dye (J-43872) Refrigerant dye cleaner	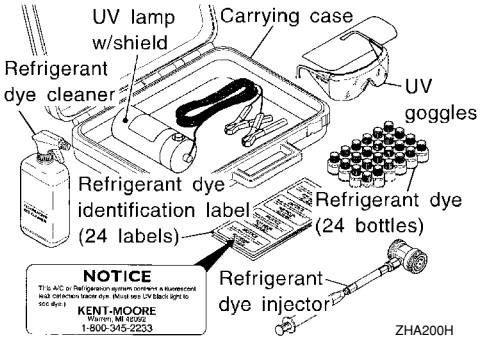 ZHA200H	Leak detection dye Power supply: DC 12V (battery terminal)
— (J-42220) Fluorescent dye leak detector	 SHA438F	Checking for refrigerant leaks when fluorescent dye is installed in A/C system. Includes: UV lamp and UV safety goggles Power supply: DC 12V (battery terminal)
— (J-41447) HFC-134a (R-134a) fluorescent leak detection dye (Box of 24, 1/4 ounce bottles)	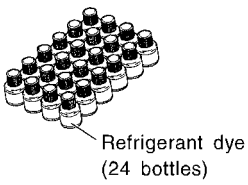 SHA439F	Application: For HFC-134a (R-134a) PAG oil Container: 1/4 ounce (7.4cc) bottle (Includes self-adhesive dye identification labels for affixing to vehicle after charging system with dye.)

Tool number (Kent-Moore No.) Tool name		Description
— (J-41459) HFC-134a (R-134a) Dye injector Use with (J-41447) 1/4 ounce bottles	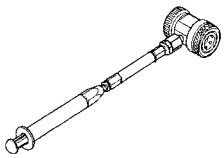 SHA440F	For injecting 1/4 ounce of fluorescent leak detection dye into A/C system.
— (J-43872) Refrigerant dye cleaner	 SHA441F	For cleaning dye spills.
— (J-39183-C) Manifold gauge set (with hoses and couplers)	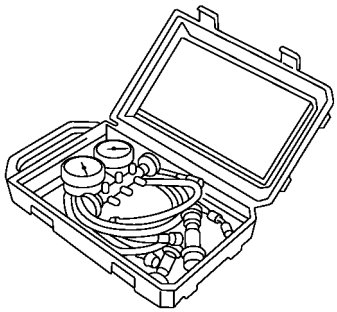 RJIA0196E	Identification: • The gauge face indicates R-134a. Fitting size: Thread size • 1/2”-16 ACME
Service hoses: • (J-39500-72B) High side hose • (J-39500-72R) Low side hose • (J-39500-72Y) Utility hose	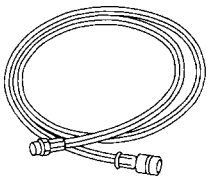 S-NT201	Hose colors: • Low side hose: Blue with black stripe • High side hose: Red with black stripe • Utility hose: Yellow with black stripe or green with black stripe Hose fitting to gauge: • 1/2”-16 ACME
Service couplers: • (J-39500-20A) High side coupler • (J-39500-24A) Low side coupler	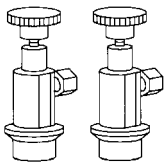 S-NT202	Hose fitting to service hose: • M14 x 1.5 fitting is optional or permanently attached.

Tool number (Kent-Moore No.) Tool name	Description
— (J-39699) Refrigerant weight scale 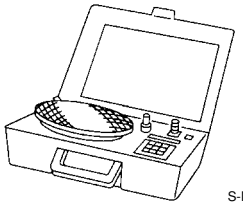 S-NT200	For measuring of refrigerant Fitting size - thread size: • 1/2” - 16 ACME
— (J-39649) Vacuum pump (Including the isolator valve) 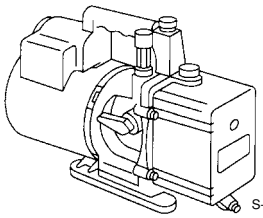 S-NT203	Capacity: • Air displacement: 4 CFM • Micron rating: 20 microns • Oil capacity: 482 g (17 oz) Fitting size: Thread size • 1/2”-16 ACME

Commercial Service Tool

INFOID:0000000001704285

(Kent-Moore No.) Tool name	Description
(J-41810-NI) Refrigerant identifier equipment (R-134a) 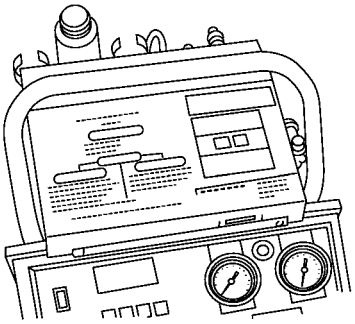 RJIA0197E	For checking refrigerant purity and system contamination
Power tool 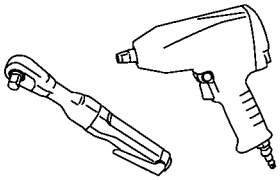 PBIC0190E	Loosening bolts and nuts
(J-44614) Clutch disc holding tool 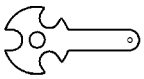 WHA230	Clutch disc holding tool

REFRIGERATION SYSTEM

Refrigerant Cycle

INFOID:0000000001704286

REFRIGERANT FLOW

The refrigerant flows in the standard pattern, that is, through the compressor, the condenser with liquid tank, through the evaporator, and back to the compressor. The refrigerant evaporation through the evaporator is controlled by an externally equalized expansion valve, located inside the evaporator case.

FREEZE PROTECTION

Under usual operating conditions, when the A/C is switched ON, the compressor runs continuously, and the evaporator pressure, and temperature is controlled by the compressor to prevent freeze up.

Refrigerant System Protection

INFOID:0000000001704287

REFRIGERANT PRESSURE SENSOR

The refrigerant system is protected against excessively high or low pressures by the refrigerant pressure sensor, located on the condenser. If the system pressure rises above, or falls below the specifications, the refrigerant pressure sensor detects the pressure inside the refrigerant line and sends the voltage signal to the ECM. ECM makes the A/C relay go OFF and stops the compressor when pressure on the high-pressure side detected by refrigerant pressure sensor is over about 2,746 kPa (27.46 bar, 28.0 kg/cm^2 , 398 psi), or below about 134 kPa (1.34 bar, 1.4 kg/cm^2 , 20 psi).

PRESSURE RELIEF VALVE

The refrigerant system is also protected by a pressure relief valve, located in the rear head of the compressor. When the pressure of refrigerant in the system increases to an unusual level [more than 3.8 MPa (38 bar, 38.76 kg/cm^2 , 551 psi)], the release port on the pressure relief valve automatically opens and releases refrigerant into the atmosphere.

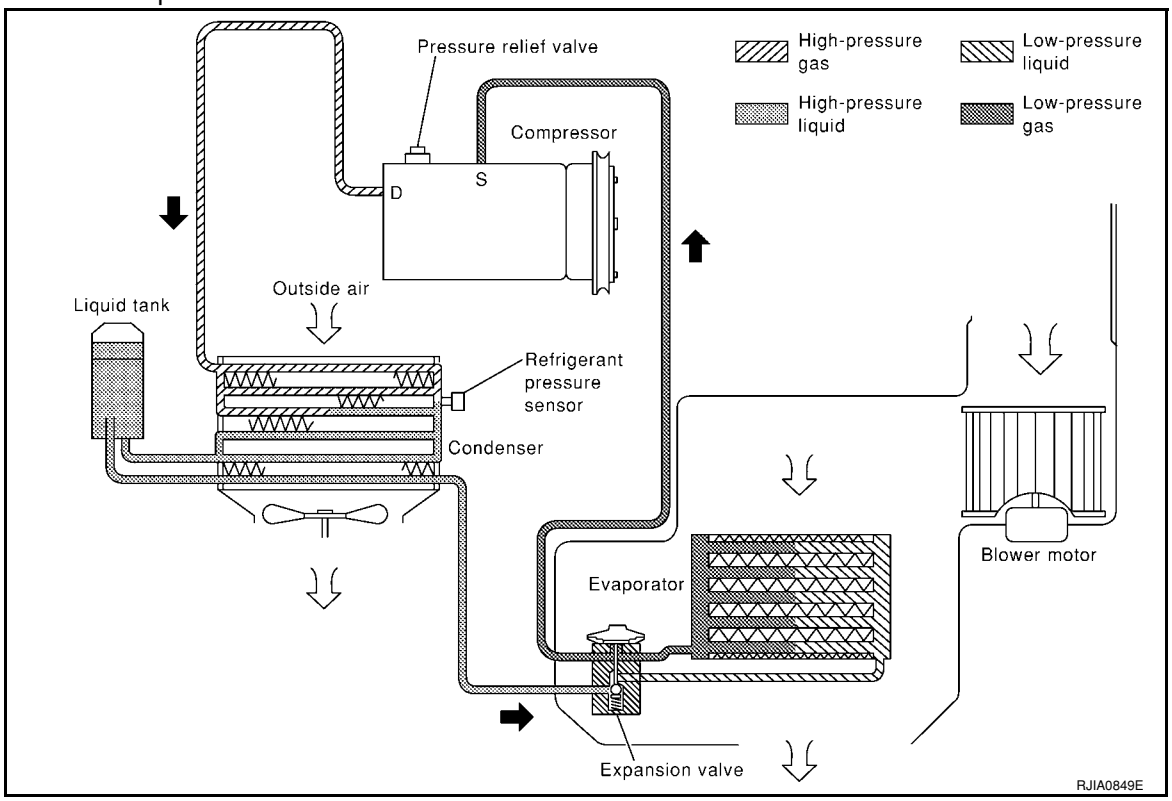

Component Part Location

INFOID:0000000001704288

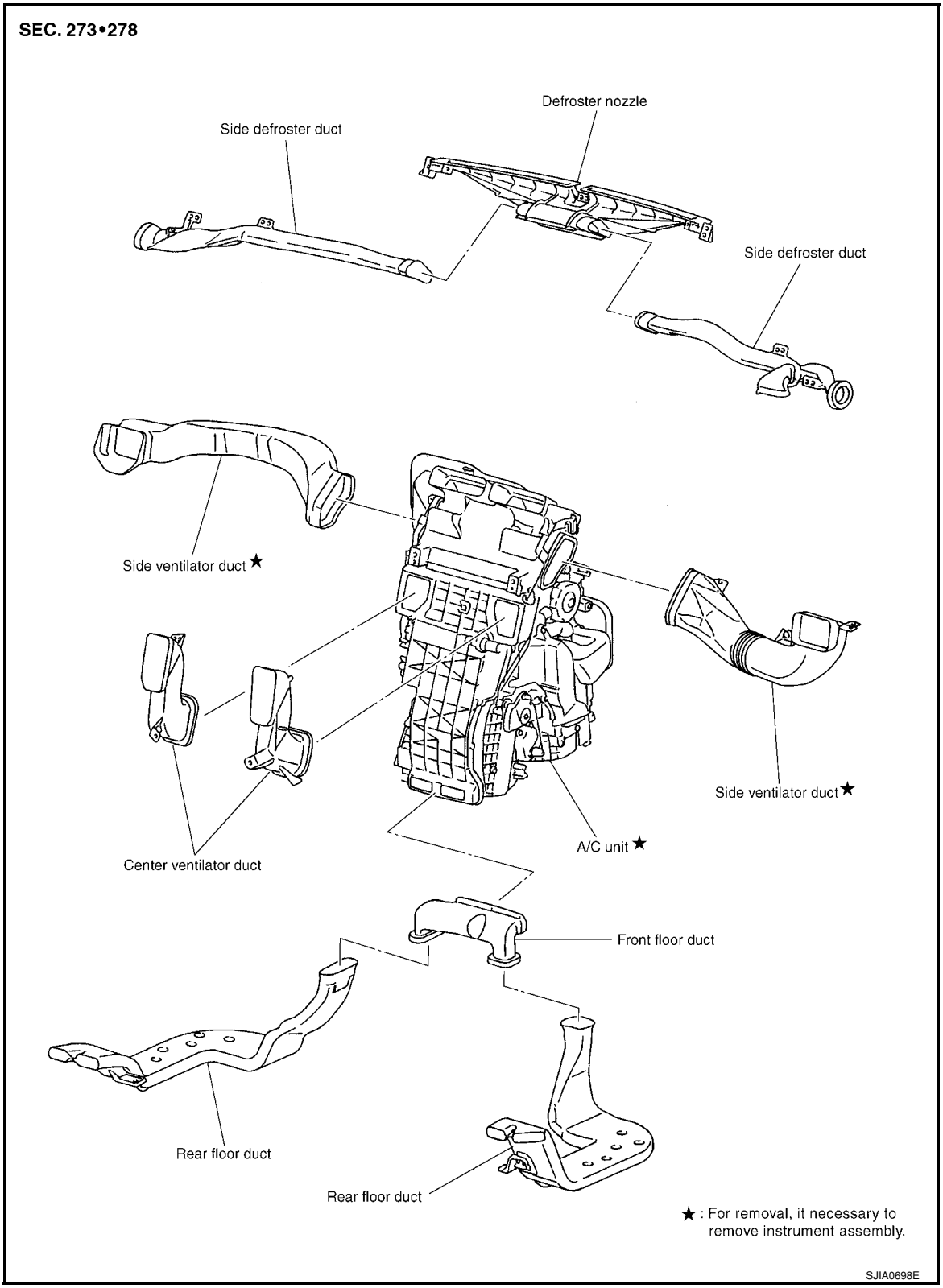

OIL

Maintenance of Oil Quantity in Compressor

INFOID:0000000001704289

The oil in the compressor circulates through the system with the refrigerant. Add oil to compressor when replacing any component or after a large refrigerant leakage occurred. It is important to maintain the specified amount.
If oil quantity is not maintained properly, the following malfunctions may result:
- Lack of oil: May lead to a seized compressor.
- Excessive oil: Inadequate cooling (thermal exchange interference)

OIL

TYPE 1 Compressor (CR-10)	**: NISSAN A/C System Oil Type R**
TYPE 2 Compressor (CSV511)	**: NISSAN A/C System Oil Type S**

OIL RETURN OPERATION

Adjust the oil quantity according to the test group shown below.

1.CHECK OIL RETURN OPERATION

Can oil return operation be performed?
- A/C system works properly.
- There is no evidence of a large amount of oil leakage.

CAUTION:
If excessive oil leakage is noted, do not perform the oil return operation.

OK or NG

OK >> GO TO 2.
NG >> GO TO 3.

2.PERFORM OIL RETURN OPERATION, PROCEEDING AS FOLLOWS

1. Start engine, and set the following conditions:
- Engine speed: Idling to 1,200 rpm
- A/C blower switch: ON
- Blower speed: Max. position
- Temp. control: Optional [Set so that intake air temperature is 25° to 30°C (77° to 86° F)].
- Intake position: Recirculation (REC)
2. Perform oil return operation for about 10 minutes.
3. Stop engine.

>> GO TO 3.

3.CHECK REPLACEMENT PART

Should the compressor be replaced?

YES >> GO TO "OIL ADJUSTING PROCEDURE FOR COMPRESSOR REPLACEMENT".
NO >> GO TO "OIL ADJUSTING PROCEDURE FOR COMPONENTS REPLACEMENT EXCEPT COMPRESSOR".

OIL ADJUSTING PROCEDURE FOR COMPONENTS REPLACEMENT EXCEPT COMPRESSOR

After replacing any of the following major components, add the correct amount of oil to the system.

Amount Of Oil To Be Added

Part replaced	Oil to be added to system	Remarks
	Amount of oil m ℓ (US fl oz, Imp fl oz)	
Evaporator	35 (1.2, 1.2)	-
Condenser	15 (0.5, 0.5)	-
Liquid tank	5 (0.2, 0.2)	-

Part replaced	Oil to be added to system	Remarks
	Amount of oil m ℓ (US fl oz, Imp fl oz)	
In case of refrigerant leak	30 (1.0, 1.1)	Large leak
	None *1	Small leak *1

*1: If refrigerant leak is small, no addition of oil is needed.

OIL ADJUSTING PROCEDURE FOR COMPRESSOR REPLACEMENT

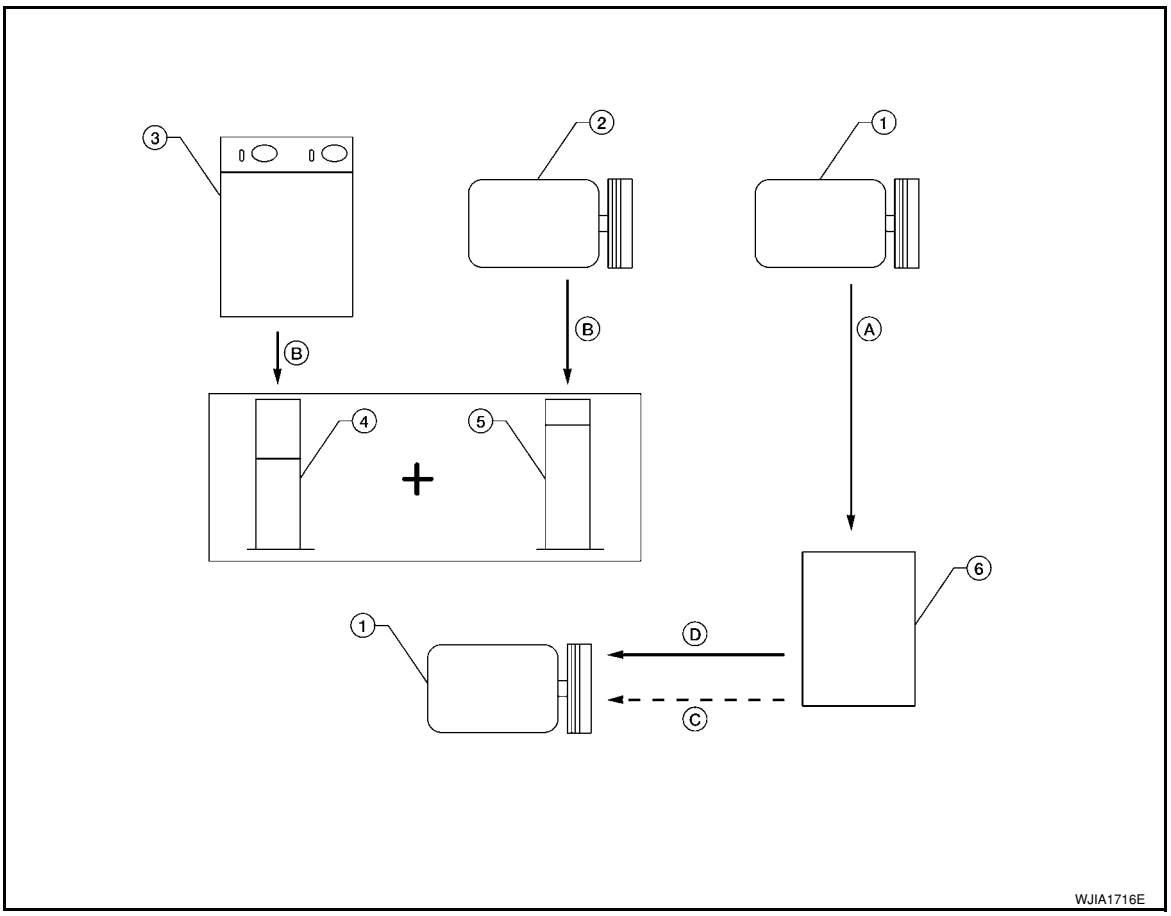

1. New compressor
2. Old compressor
3. Recovery/recycling equipment
4. Measuring cup X
5. Measuring cup Y
6. New oil

A. Drain oil from the new compressor into clean container
B. Record amount of oil recovered
C. Add an additional 5 m ℓ (0.2 US fl oz, 0.2 Imp fl oz) of new oil when replacing liquid tank
D. Install new oil equal to recorded amounts in measuring cups X plus Y

1. Before connecting recovery/recycling equipment to vehicle, check recovery/recycling equipment gauges. No refrigerant pressure should be displayed. If NG, recover refrigerant from equipment lines.
2. Discharge refrigerant into the refrigerant recovery/recycling equipment. Measure oil discharged into the recovery/recycling equipment.
3. Drain the oil from the old (removed) compressor into a graduated container and recover the amount of oil drained.
4. Drain the oil from the new compressor into a separate, clean container.
5. Measure an amount of new oil installed equal to amount drained from old compressor. Add this oil to new compressor through the suction port opening.
6. Measure an amount of new oil equal to the amount recovered during discharging. Add this oil to new compressor through the suction port opening.

7. If the liquid tank also needs to be replaced, add another 5 mℓ (0.2 US fl oz, 0.2 Imp fl oz.) of oil at this time.
   Add this 5 mℓ (0.2 US fl oz, 0.2 Imp fl oz.) of oil only when replacing the compressor.

AIR CONDITIONER CONTROL

Control Operation

INFOID:0000000001704290

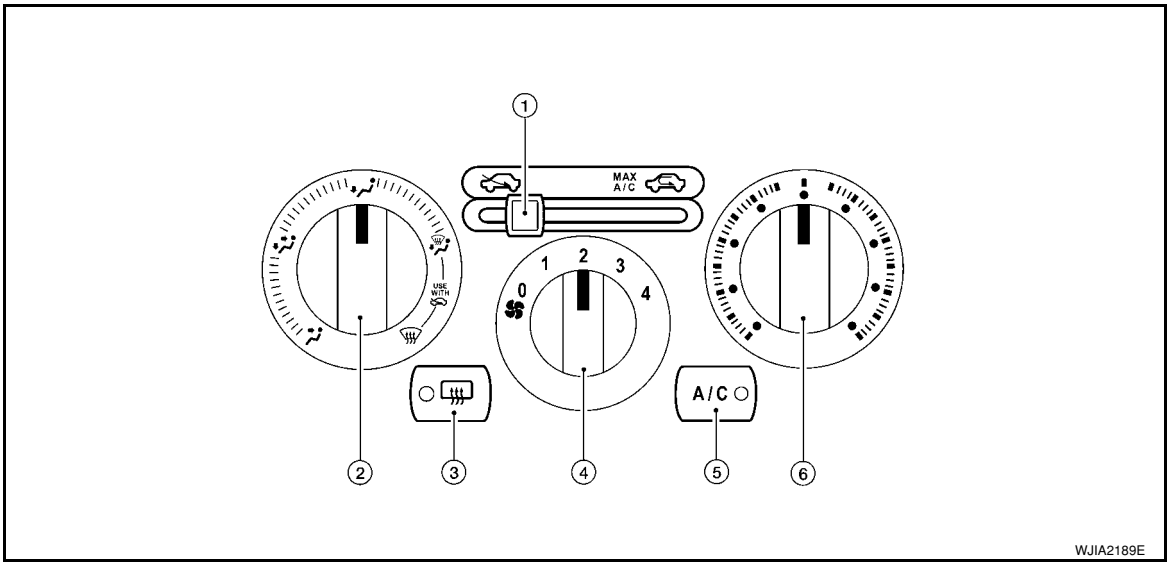

1. Intake door lever	2. Mode door control dial	3. Rear window defogger switch
4. Blower control dial	5. A/C switch (if equipped)	6. Temperature control dial

BLOWER CONTROL DIAL

This dial turns the fan ON and OFF, and controls fan speed.

TEMPERATURE CONTROL DIAL

This dial allows you to adjust the temperature of the discharge air.

MODE DOOR CONTROL DIAL

This dial controls the outlet air flow.

INTAKE DOOR LEVER

- Recirculation (REC) position: Interior air is recirculated inside the vehicle.
- Fresh (FRE) position: Outside air is drawn into the passenger compartment.

REAR WINDOW DEFOGGER SWITCH

When illumination is ON, rear window is defogged.

A/C SWITCH (IF EQUIPPED)

The A/C switch controls the air conditioner system. When the switch is depressed with the fan ON, the compressor will turn ON. The indicator lamp also illuminates.

Discharge Air Flow

INFOID:0000000001704291

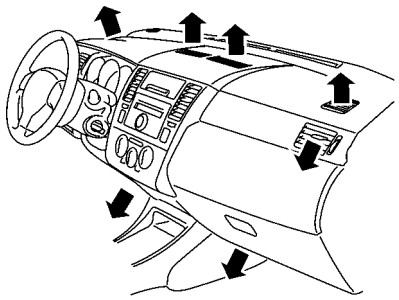

WJIA2190E

Mode door position	Air outlet/distribution		
	Vent	Foot	Defroster
	100%	—	—
	56%	44%	—
	16%	64%	20%
	16%	53%	31%
	17%	—	83%
Airflow always present at driver and passenger side demisters			

System Description

INFOID:0000000001704292

SWITCHES AND THEIR CONTROL FUNCTION

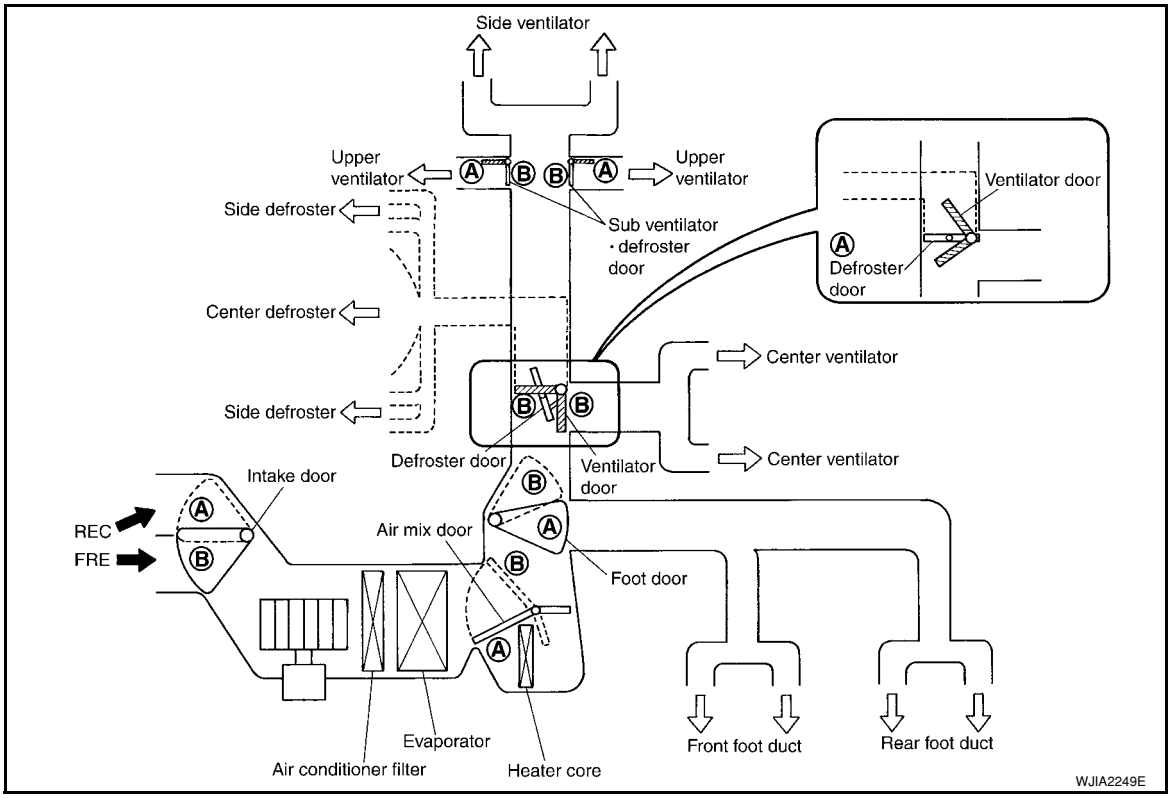

Door \ Mode control dial	MODE Position					Intake door lever		Temperature control dial		
	VENT	B/L	FOOT	D/F	DEF	FRE	REC	Full cold	←→	Full hot
Ventilator door	Ⓐ	Ⓐ	Ⓑ *1	Ⓑ *1	Ⓑ *1	—		—		
Sub ventilator door	Ⓐ	Ⓐ	Ⓑ	Ⓑ	Ⓑ	—		—		
Defroster door	Ⓐ	Ⓐ	*2 Ⓐ ~ Ⓑ	*3 Ⓐ ~ Ⓑ	Ⓑ	—		—		
Foot door	Ⓐ	Ⓐ ~ Ⓑ	Ⓑ *1	Ⓐ ~ Ⓑ	Ⓐ	—		—		
Intake door	—					Ⓑ	Ⓐ	—		
Air mix door	—					—		Ⓐ	Ⓐ~Ⓑ	Ⓑ

*1 In the Ⓑ position, the ventilator and foot doors are not completely closed.
*2 In the Ⓐ ~ Ⓑ position, the foot door is 60% open.
*3 In the Ⓐ ~ Ⓑ position, the defroster is 75% open.

WJIA2234E

CAN Communication System Description

INFOID:0000000001704293

Refer to LAN-6.

TROUBLE DIAGNOSIS

CONSULT-III Function (BCM)

INFOID:0000000001704294

CONSULT-III can display each diagnostic item using the diagnostic test modes shown following.

BCM diagnostic test item	Diagnostic mode	Description
Inspection by part	WORK SUPPORT	Supports inspections and adjustments. Commands are transmitted to the BCM for setting the status suitable for required operation, input/output signals are received from the BCM and received data is displayed.
	DATA MONITOR	Displays BCM input/output data in real time.
	ACTIVE TEST	Operation of electrical loads can be checked by sending drive signal to them.
	SELF-DIAG RESULTS	Displays BCM self-diagnosis results.
	CAN DIAG SUPPORT MNTR	The result of transmit/receive diagnosis of CAN communication can be read.
	ECU PART NUMBER	BCM part number can be read.
	CONFIGURATION	Performs BCM configuration read/write functions.

DATA MONITOR

Display Item List

Monitor item name "operation or unit"		Contents
IGN ON SW	"ON/OFF"	Displays "IGN Position (ON)/OFF, ACC Position (OFF)" status as judged from ignition switch signal through the CAN communication.
FAN ON SIG	"ON/OFF"	Displays "FAN (ON)/FAN (OFF)" status as judged from blower fan motor switch signal through CAN communication.
AIR COND SW	"ON/OFF"	Displays "COMP (ON)/COMP (OFF)" status as judged from air conditioner switch signal through the CAN communication.

How to Perform Trouble Diagnosis for Quick and Accurate Repair

INFOID:0000000001704295

WORK FLOW

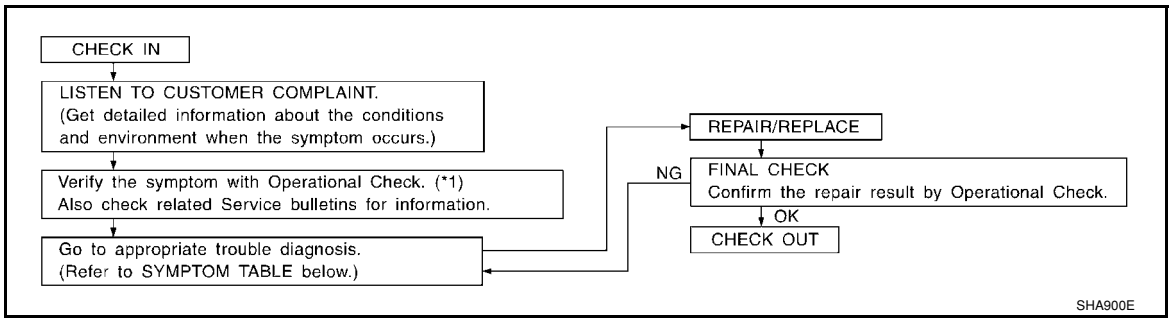

*1 MTC-30, "Operational Check"

SYMPTOM TABLE

Symptom	Reference Page	
Air outlet does not change.	Go to Trouble Diagnosis Procedure for Mode Door.	MTC-31
Discharge air temperature does not change.	Go to Trouble Diagnosis Procedure for Air Mix Door.	MTC-32
Intake door does not change.	Go to Trouble Diagnosis Procedure for Intake Door.	MTC-33
Blower motor operation is malfunctioning.	Go to Trouble Diagnosis Procedure for Blower Motor.	MTC-33

Symptom	Reference Page	
Magnet clutch does not engage in A/C, defrost/foot, or defrost mode.	Go to Trouble Diagnosis Procedure for Magnet Clutch.	MTC-37
Insufficient cooling	Go to Trouble Diagnosis Procedure for Insufficient Cooling.	MTC-45
Insufficient heating	Go to Trouble Diagnosis Procedure for Insufficient Heating.	MTC-52
Noise	Go to Trouble Diagnosis Procedure for Noise.	MTC-53

Component Parts and Harness Connector Location

INFOID:0000000001704296

ENGINE COMPARTMENT

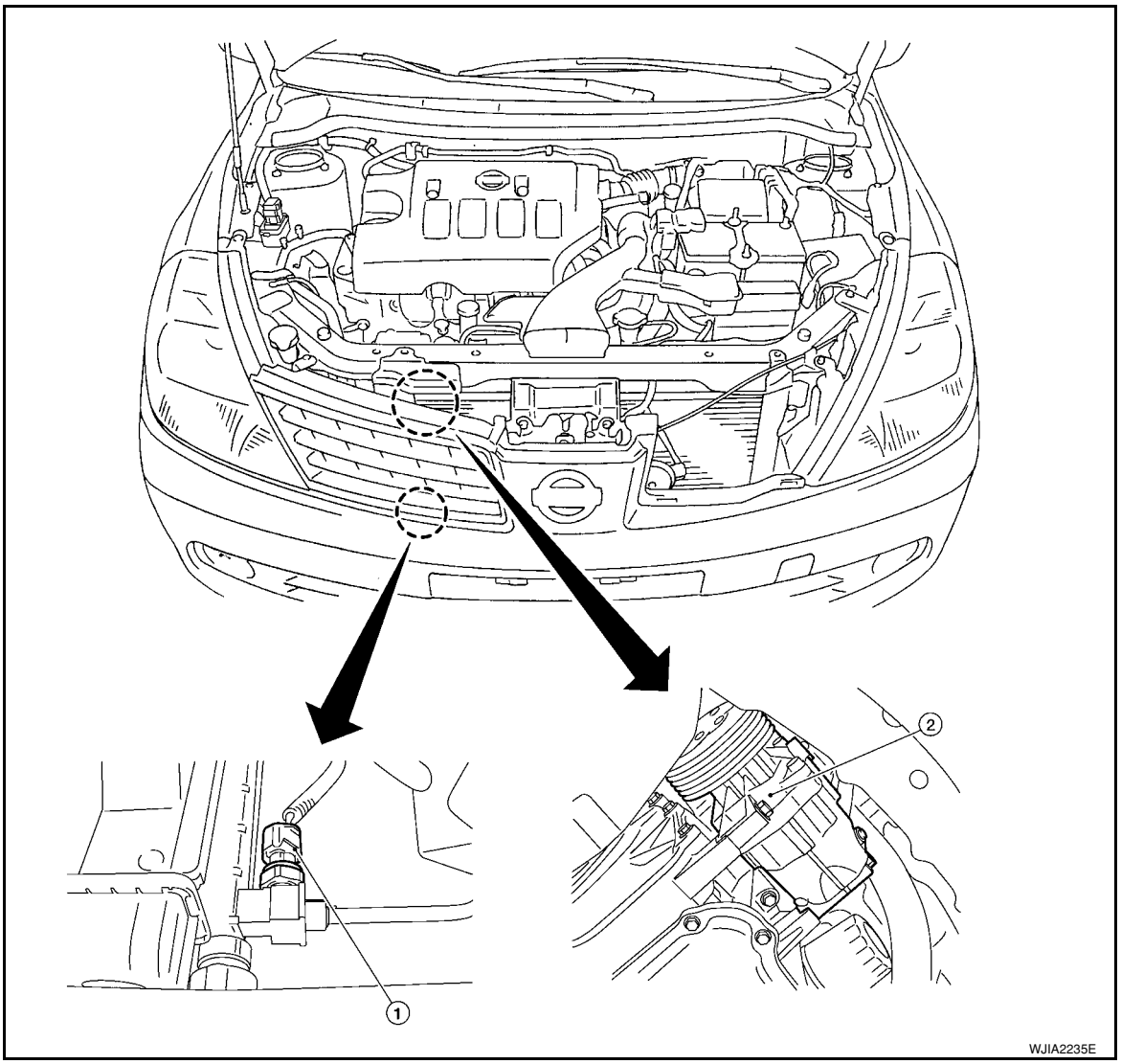

1. Refrigerant pressure sensor E17
2. A/C compressor F3

PASSENGER COMPARTMENT

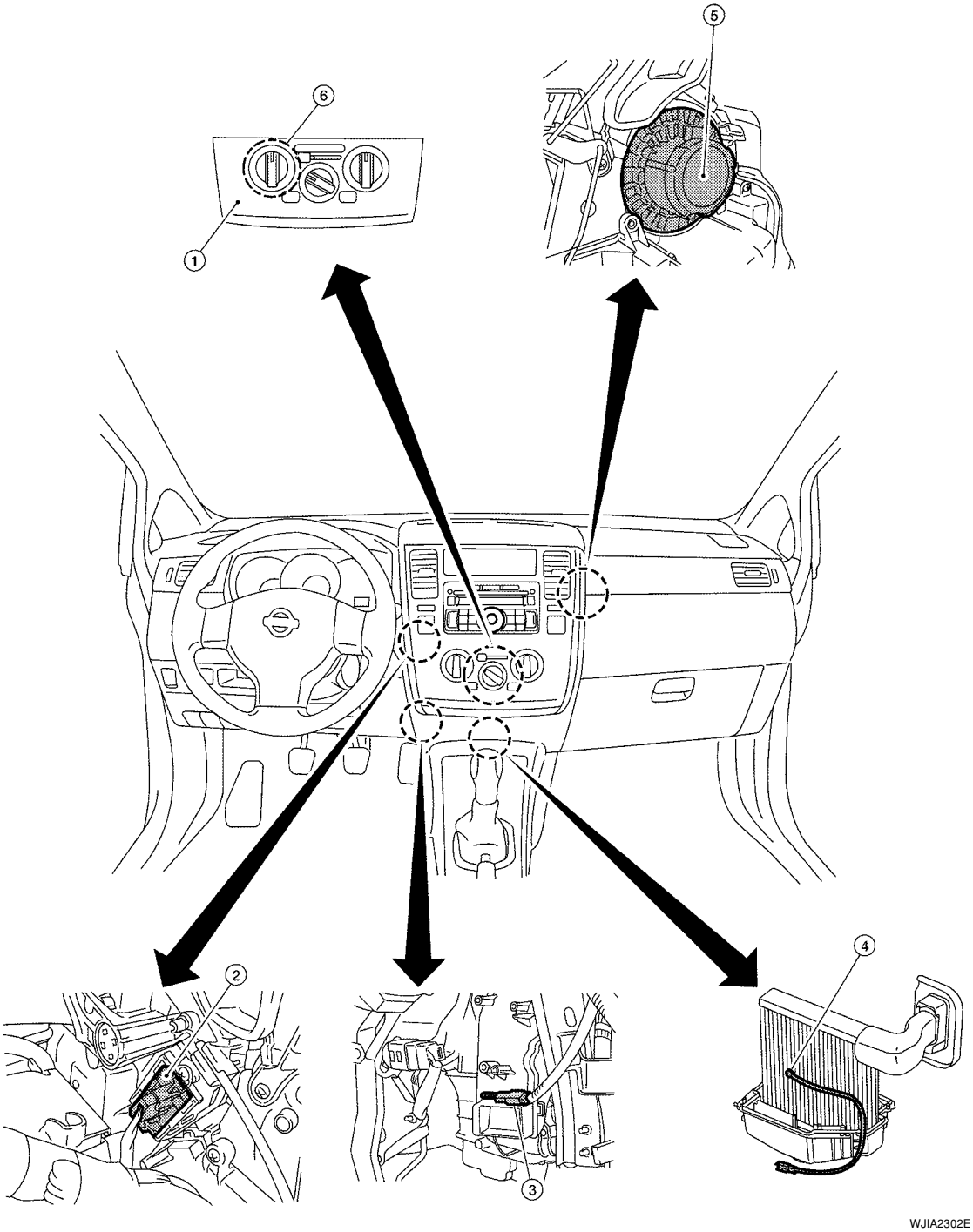

1. Front air control M33
2. Front blower motor resistor M151
3. Thermo control amp. jumper connector (with CVT)
4. Thermo control amp. M42 (without CVT)
5. Front blower motor M62
6. Defrost A/C switch M41 (located on back side of front air control)

Schematic

INFOID:0000000001704297

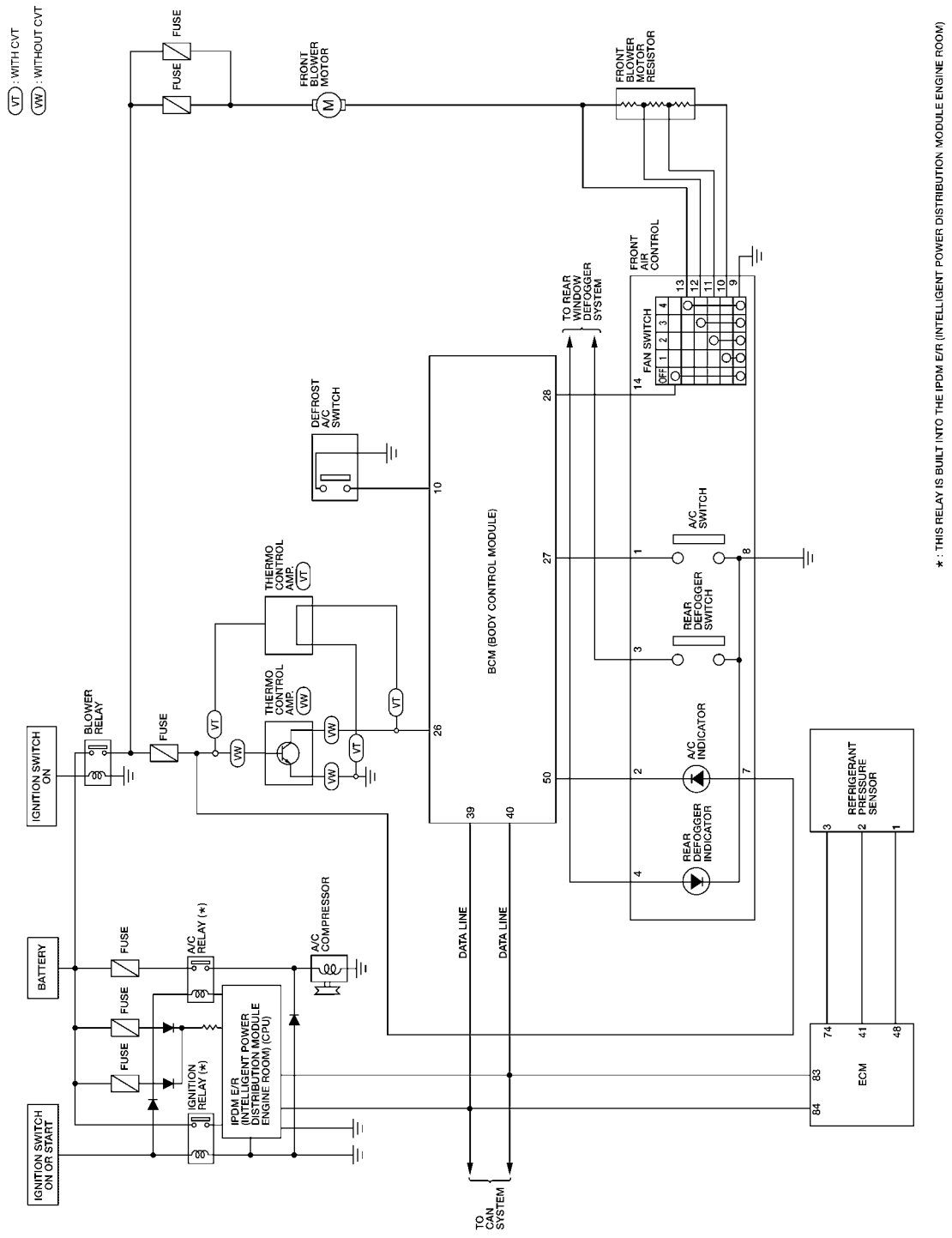

WJWA0487E

Wiring Diagram - Heater -

INFOID:0000000001704298

WITHOUT A/C

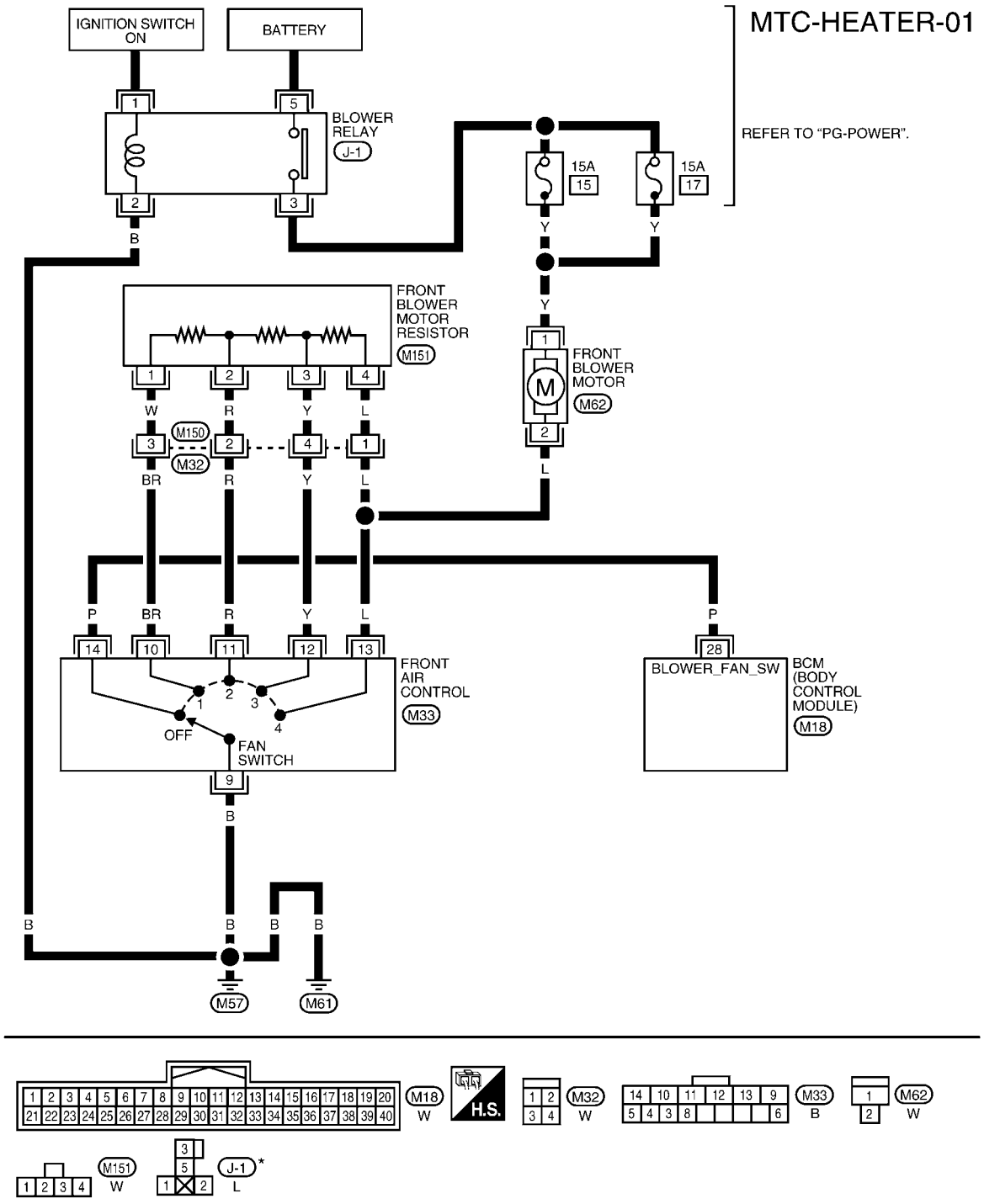

*: THIS CONNECTOR IS NOT SHOWN IN "HARNESS LAYOUT" OF PG SECTION.

WJWA0485E

Wiring Diagram - A/C,M -

INFOID:0000000001704299

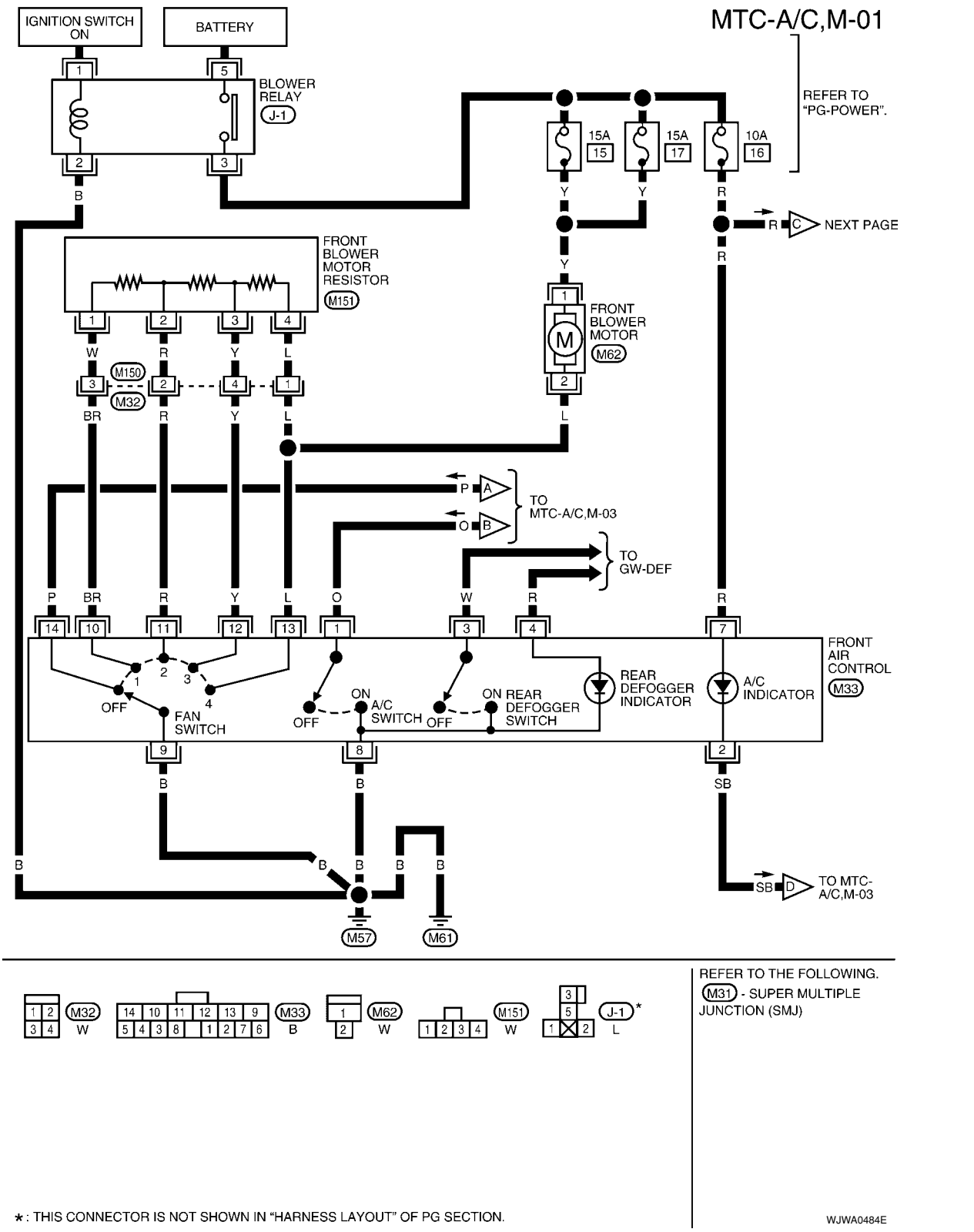

*: THIS CONNECTOR IS NOT SHOWN IN "HARNESS LAYOUT" OF PG SECTION.

MTC-A/C,M-02

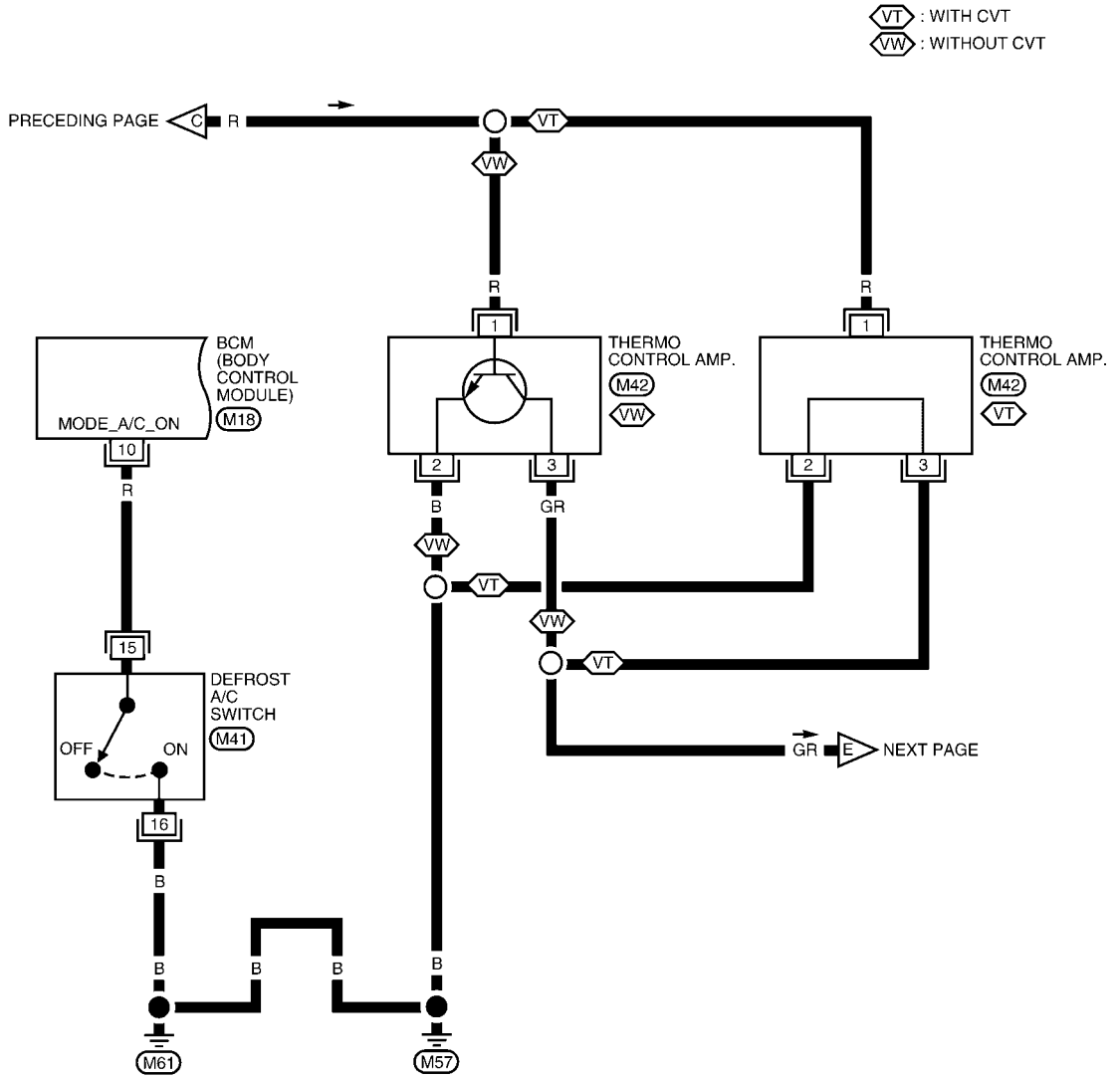

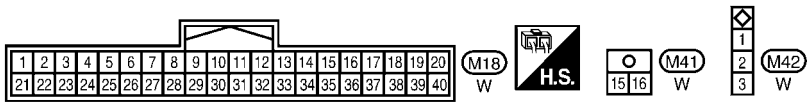

REFER TO THE FOLLOWING.
M31 - SUPER MULTIPLE JUNCTION (SMJ)

WJWA0486E

MTC-A/C,M-03
: DATA LINE

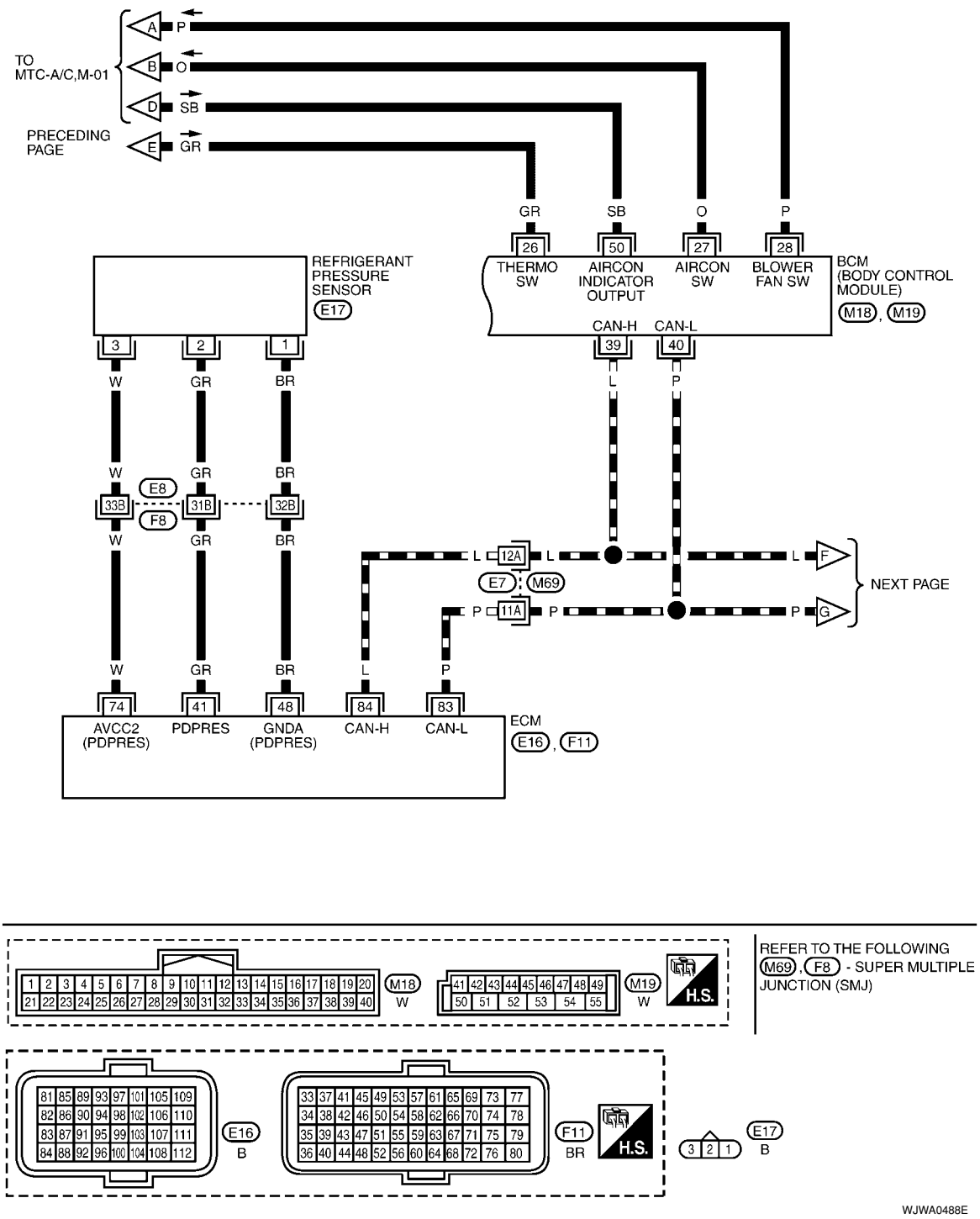

MTC-A/C,M-04

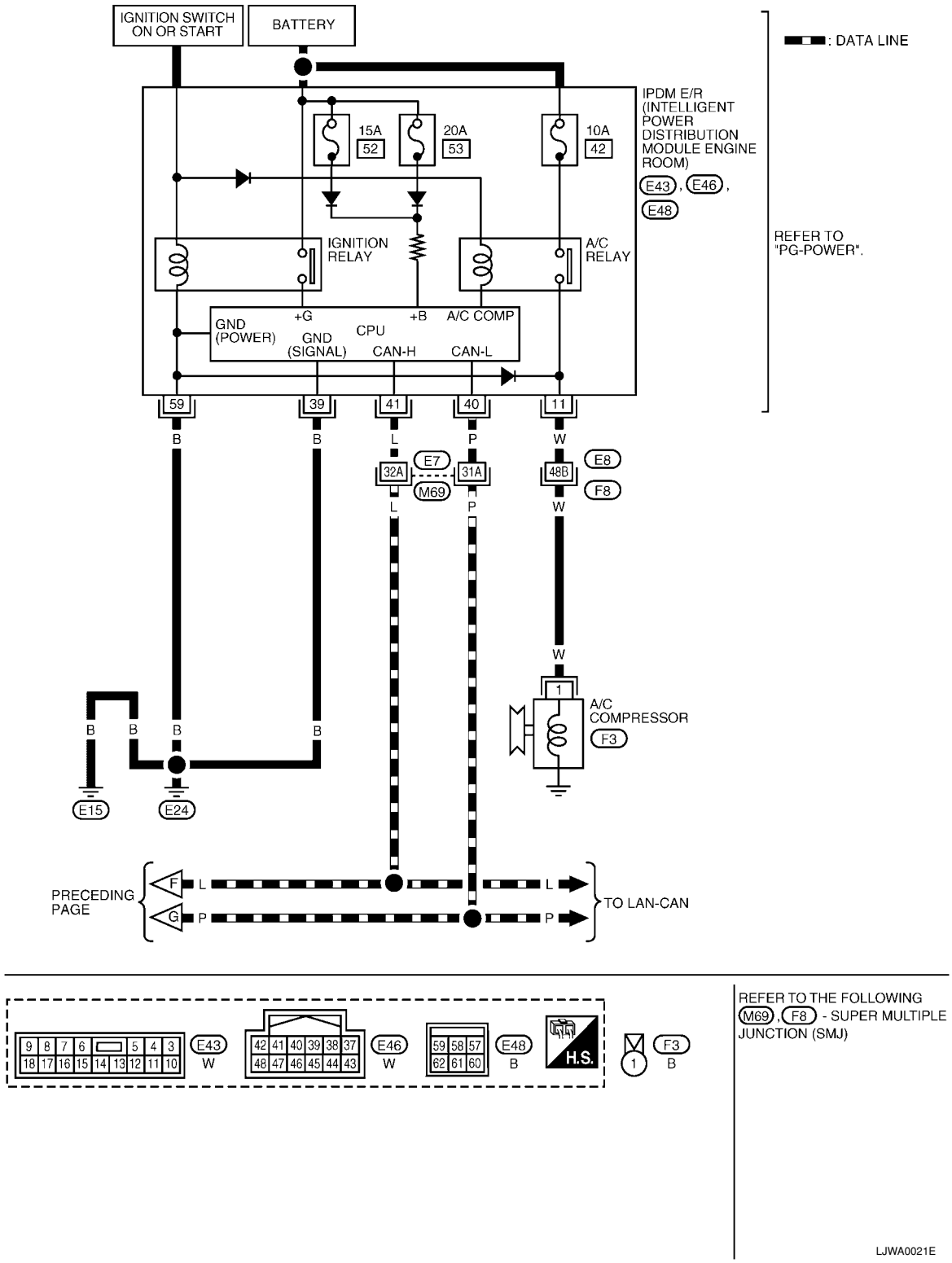

Operational Check

INFOID:0000000001704300

The purpose of the operational check is to confirm that the system operates properly.

Conditions : Engine running at normal operating temperature

CHECKING BLOWER

1. Turn blower control dial clockwise to "1" position. Blower should operate on low speed.
2. Turn blower control dial clockwise to "2" position, and continue checking blower speed until all speeds are checked.
3. Leave blower on Maximum speed.

If NG, go to trouble diagnosis procedure for MTC-33, "Front Blower Motor Circuit".
If OK, continue the check.

CHECKING DISCHARGE AIR

1. Turn mode door control dial to each position.
2. Confirm that discharge air comes out according to the air distribution table. Refer to MTC-20, "Discharge Air Flow".

If NG, go to trouble diagnosis procedure for MTC-31, "Mode Door".
If OK, continue the check.

CHECKING RECIRCULATION

1. Set intake door lever to REC position.
2. Operate intake door lever to FRE position.
3. Listen for intake door position change (you should hear blower sound change slightly).

If NG, go to trouble diagnosis procedure for MTC-33, "Intake Door".
If OK, continue the check.

CHECKING TEMPERATURE DECREASE

1. Turn temperature control dial counterclockwise to full cold position.
2. Check for cold air at discharge air outlets.

If NG, go to trouble diagnosis procedure for MTC-45, "Insufficient Cooling".
If OK, continue the check.

CHECKING TEMPERATURE INCREASE

1. Turn temperature control dial clockwise to full hot position.
2. Check for hot air at discharge air outlets.

If NG, go to trouble diagnosis procedure for MTC-52, "Insufficient Heating".
If OK, continue the check.

CHECKING A/C SWITCH (IF EQUIPPED)

1. Turn fan control dial to the desired (1 to 4 speed) position.
2. Press A/C switch.
3. A/C switch indicator will turn ON.
   - Confirm that the compressor clutch engages (sound or visual inspection).

If NG, go to trouble diagnosis procedure for MTC-37, "Magnet Clutch Circuit (If Equipped)".
If OK, continue the check.

CHECKING DEFROST A/C SWITCH (IF EQUIPPED)

1. Turn fan control dial to the desired (1 to 4 speed) position.
2. Turn mode dial to ( ) DEF.
3. Confirm that the compressor clutch engages (sound or visual inspection) and the A/C switch indicator illuminates.

If NG, go to trouble diagnosis procedure for MTC-37, "Magnet Clutch Circuit (If Equipped)".
If all operational checks are OK (symptom cannot be duplicated), go to MTC-22, "How to Perform Trouble Diagnosis for Quick and Accurate Repair" and perform tests as outlined. If symptom appears, refer to MTC-22, "How to Perform Trouble Diagnosis for Quick and Accurate Repair" and perform applicable trouble diagnosis procedures.

Mode Door

INFOID:0000000001704301

SYMPTOM: Air outlet does not change.

INSPECTION FLOW

1. CONFIRM SYMPTOM BY PERFORMING OPERATIONAL CHECK - DISCHARGE AIR

1. Rotate the mode door control dial to each position.
2. Confirm that discharge air comes out according to the air distribution table. Refer to MTC-20, "Discharge Air Flow".
   NOTE:
   Confirm that the compressor clutch (with A/C) is engaged (visual inspection) when DEF ( ) or D/F ( ) is selected.

Can a symptom be duplicated?

YES >> GO TO 3.
NO >> GO TO 2.

2. PERFORM COMPLETE OPERATIONAL CHECK

Perform a complete operational check and check for any symptoms. Refer to MTC-30, "Operational Check".

Can a symptom be duplicated?

YES >> Refer to MTC-22, "How to Perform Trouble Diagnosis for Quick and Accurate Repair".
NO >> System OK.

3. CHECK FOR SERVICE BULLETINS

Check for any service bulletins.

>> GO TO 4.

4. CHECK MODE DOOR CONTROL CABLE

Check and verify mode door mechanism for smooth operation in each mode.

OK or NG

OK >> If the symptom still exists, perform a complete operational check and check for other symptoms. Refer to MTC-30, "Operational Check". If other symptoms exist, refer to MTC-22, "How to Perform Trouble Diagnosis for Quick and Accurate Repair" .
NG >> Repair or adjust mode door control cable. Refer to MTC-65, "Mode Door Cable Adjustment".

Air Mix Door

INFOID:0000000001704302

SYMPTOM: Air mix door does not change.

INSPECTION FLOW

1. CONFIRM SYMPTOM BY PERFORMING OPERATIONAL CHECK - TEMPERATURE INCREASE

1. Turn the temperature control dial clockwise until maximum heat.
2. Check for hot air at discharge air outlets.

>> GO TO 2.

2. CONFIRM SYMPTOM BY PERFORMING OPERATIONAL CHECK - TEMPERATURE DECREASE

1. Turn the temperature control dial counterclockwise until maximum cold.
2. Check for cold air at discharge air outlets.

Can a symptom be duplicated?

YES >> GO TO 4.
NO >> GO TO 3.

3. PERFORM COMPLETE OPERATIONAL CHECK

Perform a complete operational check and check for any symptoms. Refer to MTC-30, "Operational Check".

Can a symptom be duplicated?

YES >> Refer to MTC-22, "How to Perform Trouble Diagnosis for Quick and Accurate Repair".
NO >> System OK.

4. CHECK FOR SERVICE BULLETINS

Check for any service bulletins.

>> GO TO 5.

5. CHECK AIR MIX DOOR CONTROL LINKAGE

Check and verify air mix door mechanism for smooth operation.

OK or NG

OK >> If the symptom still exists, perform a complete operational check. Refer to MTC-30, "Operational Check" If other symptoms exist, refer to MTC-22, "How to Perform Trouble Diagnosis for Quick and Accurate Repair".

NG >> Repair or adjust air mix door control linkage. Refer to MTC-64, "Air Mix Door Cable Adjustment".

Intake Door

INFOID:0000000001704303

SYMPTOM:
- Intake door does not change.

INSPECTION FLOW

1. CONFIRM SYMPTOM BY PERFORMING OPERATIONAL CHECK - REC ( )

1. Slide the intake door lever to the REC ( ) position.
2. Turn the blower motor to maximum speed.
3. Slide the intake door lever to the FRE position.
4. Listen for intake door position change (you should hear blower sound change slightly).

Can a symptom be duplicated?

YES >> GO TO 3.

NO >> GO TO 2.

2. PERFORM COMPLETE OPERATIONAL CHECK

Perform a complete operational check and check for any symptoms. Refer to MTC-30, "Operational Check" .

Can a symptom be duplicated?

YES >> Refer to MTC-22, "How to Perform Trouble Diagnosis for Quick and Accurate Repair" .

NO >> System OK.

3. CHECK FOR SERVICE BULLETINS

Check for any service bulletins.

>> GO TO 4.

4. CHECK INTAKE DOOR CONTROL LINKAGE

Check intake door control linkage mechanism for smooth operation.

OK or NG

OK >> If the symptom still exists, perform a complete operational check. Refer to MTC-30, "Operational Check" . If other symptoms exist, refer to MTC-22, "How to Perform Trouble Diagnosis for Quick and Accurate Repair" .

NG >> Repair or adjust control linkage. Refer to MTC-63, "Intake Door Cable Adjustment" .

Front Blower Motor Circuit

INFOID:0000000001819758

SYMPTOM: Front blower motor operation is malfunctioning.

INSPECTION FLOW

1. CONFIRM SYMPTOM BY PERFORMING OPERATIONAL CHECK - FRONT BLOWER

1. Turn blower control dial to "1" position. Blower should operate on low speed.
2. Turn the blower control dial to "2" position, and continue checking blower speed until all speeds are checked.

Can the symptom be duplicated?

YES >> GO TO 2.

NO >> GO TO 3.

2. PERFORM COMPLETE OPERATIONAL CHECK

Perform a complete operational check and check for any symptoms. Refer to MTC-30, "Operational Check".

Can a symptom be duplicated?

YES >> Refer to MTC-22, "How to Perform Trouble Diagnosis for Quick and Accurate Repair".
NO >> System OK.

3. CHECK FOR SERVICE BULLETINS

Check for any service bulletins.

>> GO TO 4.

4. CHECK FRONT BLOWER MOTOR CIRCUIT

Check front blower motor circuit. Refer to "DIAGNOSTIC PROCEDURE FOR FRONT BLOWER MOTOR" .

OK or NG?

OK >> If the symptom still exists, perform a complete operational check. Refer to MTC-30, "Operational Check". If other symptoms exist, refer to MTC-22, "How to Perform Trouble Diagnosis for Quick and Accurate Repair".
NG >> Repair as necessary.

DIAGNOSTIC PROCEDURE FOR FRONT BLOWER MOTOR

SYMPTOM: Blower motor operation is malfunctioning.

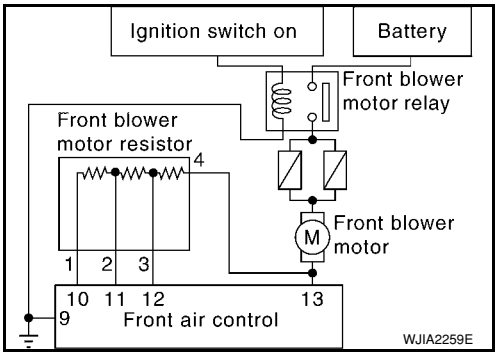

1. CHECK FRONT BLOWER MOTOR OPERATION

1. Turn ignition switch ON.
2. Check front blower motor operation at each fan speed.

OK or NG

OK >> Inspection End.
NG >> • Front blower motor does not operate at any speed, GO TO 2.
• Front blower motor does not operate at one or more of the four speeds, GO TO 10.

2. CHECK POWER SUPPLY FOR FRONT BLOWER MOTOR

1. Turn ignition switch OFF.
2. Disconnect front blower motor connector.
3. Turn ignition switch ON.
4. Check voltage between front blower motor harness connector M62 terminal 1 and ground.

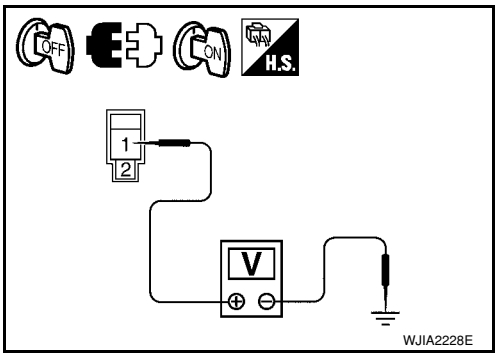

Terminals			Voltage (Approx.)
(+)		(–)	
Connector	Terminal		
Front blower motor: M62	1	Ground	Battery voltage

OK or NG

OK >> GO TO 6.

NG >> Check power supply circuit and 15A fuses [Nos. 15 and 17, located in the fuse block (J/B)]. Refer to PG-3, "Schematic".
- If fuses are OK, reinstall fuses and GO TO 3.
- If fuses are NG, replace fuse and check harness for short circuit. Repair or replace if necessary.

3. CHECK BLOWER MOTOR RELAY POWER SUPPLY CIRCUITS

1. Turn ignition switch OFF.
2. Disconnect blower motor relay connector.
3. Turn ignition switch ON.
4. Check voltage between blower motor relay harness connector J-1 terminal 1, 5 and ground.

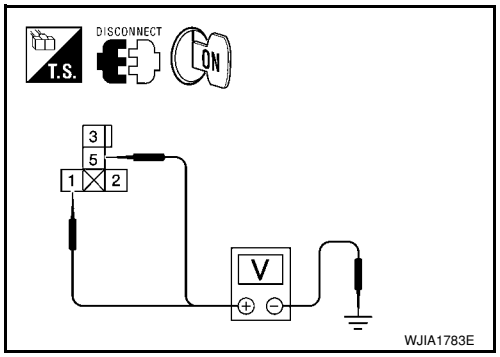

1 - Ground **Battery voltage should exist.**

5 - Ground **Battery voltage should exist.**

OK or NG

OK >> GO TO 4.
NG >> Repair harness or connector.

4. CHECK BLOWER MOTOR RELAY (SWITCH SIDE) CIRCUIT FOR OPEN

1. Turn ignition switch OFF.
2. Check continuity between blower motor relay harness connector J-1 (A) terminal 3 and front blower motor harness connector M62 (B) terminal 1.

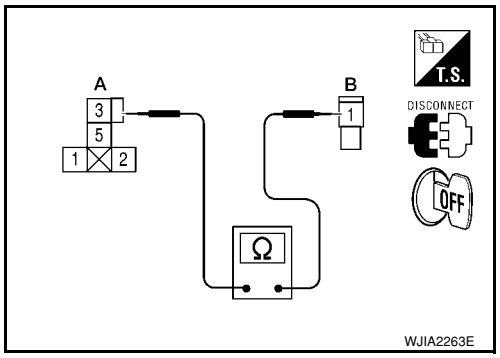

Continuity should exist.

OK or NG

OK >> GO TO 5.
NG >> Repair harness or connector.

5. CHECK BLOWER MOTOR RELAY GROUND CIRCUIT

Check continuity between blower motor relay harness connector J-1 terminal 2 and ground.

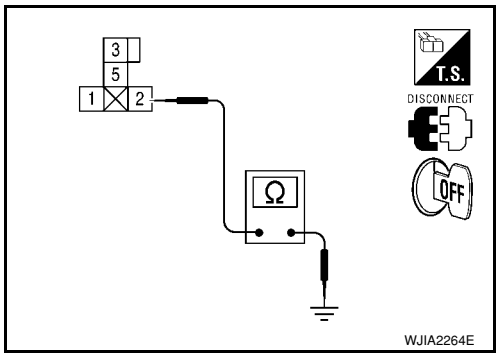

Continuity should exist.

OK or NG

OK >> Replace blower motor relay.
NG >> Repair harness or connector.

6. CHECK FRONT BLOWER MOTOR

Check continuity between front blower motor terminals 1 and 2.

NOTE:
Ensure that there are no foreign particles inside the A/C unit assembly for a smooth rotation of the front blower motor.

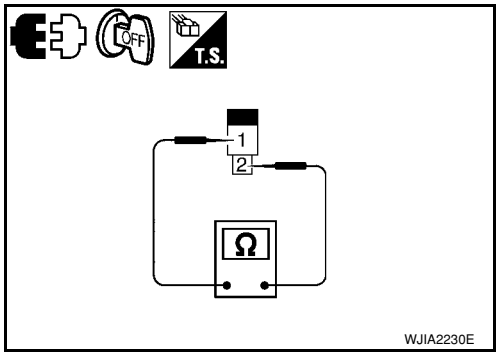

1 - 2 **: Continuity should exist.**

OK or NG

OK >> GO TO 7.
NG >> Replace front blower motor. Refer to MTC-62, "Removal and Installation".

7. CHECK CIRCUIT CONTINUITY BETWEEN FRONT BLOWER MOTOR AND FRONT AIR CONTROL

1. Disconnect front air control connector.
2. Check continuity between front blower motor harness connector M62 (A) terminal 2 and front air control harness connector M33 (B) terminal 13.

2 - 13 : Continuity should exist.

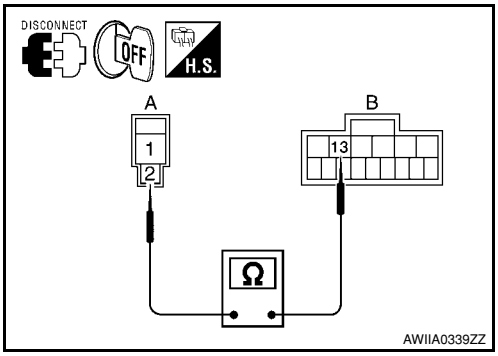

OK or NG

OK >> GO TO 8.
NG >> Repair harness or connector.

8. CHECK FAN SWITCH

Check continuity between front air control terminal 9 and 10, 11, 12, 13, 14.

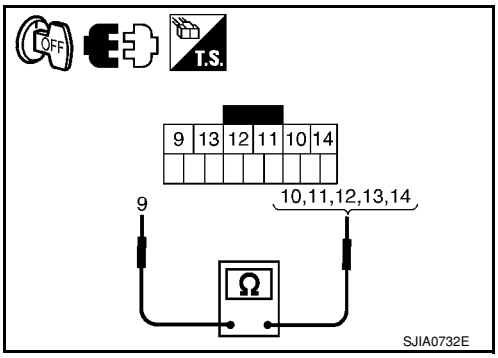

Terminals		Condition	Continuity
9	14	Blower control dial: OFF	Yes
	10	Blower control dial: 1-speed	
	11	Blower control dial: 2-speed	
	12	Blower control dial: 3-speed	
	13	Blower control dial: 4-speed	

OK or NG

OK >> GO TO 9.
NG >> Replace front air control. Refer to MTC-58, "Removal and Installation".

9. CHECK FAN SWITCH GROUND CIRCUIT

Check continuity between front air control harness connector M33 terminal 9 and ground.

Continuity should exist.

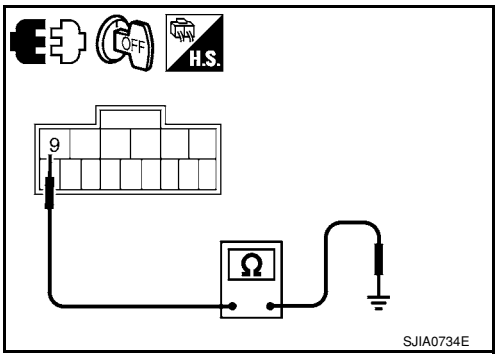

OK or NG

OK >> Inspection End.
NG >> Repair harness or connector.

10. CHECK CIRCUIT CONTINUITY BETWEEN FRONT AIR CONTROL AND FRONT BLOWER MOTOR RESISTOR

1. Turn ignition switch OFF.
2. Disconnect front blower motor resistor and front air control connectors.
3. Check continuity between front air control harness connector M33 (A) terminals and front blower motor resistor harness connector M6 (B) terminals.

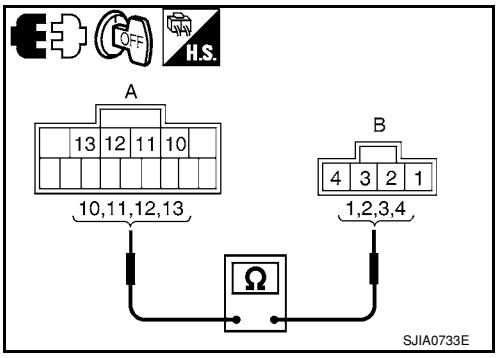

A		B		Continuity
Connector	Terminal	Connector	Terminal	
Front air control: M33	10	Front blower motor resistor: M6	1	Yes
	11		2	
	12		3	
	13		4	

OK or NG

OK >> GO TO 11.
NG >> Repair harness or connector.

11. CHECK FAN SWITCH

Check continuity between front air control terminal 9 and 10, 11, 12, 13, 14.

Terminals		Condition	Continuity
9	14	Fan control dial: OFF	Yes
	10	Fan control dial: 1-speed	
	11	Fan control dial: 2-speed	
	12	Fan control dial: 3-speed	
	13	Fan control dial: 4-speed	

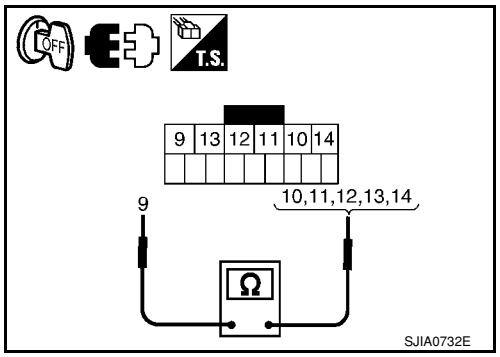

OK or NG

OK >> Replace the front blower motor resistor. Refer to MTC-66, "Removal and Installation".
NG >> Replace front air control. Refer to MTC-58, "Removal and Installation".

Magnet Clutch Circuit (If Equipped)

INFOID:0000000001704305

SYMPTOM: Magnet clutch does not engage.

INSPECTION FLOW

1. CONFIRM SYMPTOM BY PERFORMING OPERATIONAL CHECK - MAGNET CLUTCH

1. Turn ignition switch ON.
2. Turn blower control dial to the desired (1 to 4 speed) position.
3. Press the A/C switch. A/C indicator will turn on.
4. Confirm that the compressor clutch engages (sound or visual inspection).

Can the symptom be duplicated?

YES >> GO TO 3.
NO >> GO TO 2.

2. CHECK FOR ANY SYMPTOMS

Perform a complete operational check for any symptoms. Refer to MTC-30, "Operational Check".

Does another symptom exist?

YES >> Refer to MTC-22, "How to Perform Trouble Diagnosis for Quick and Accurate Repair".
NO >> System OK.

3. CHECK FOR SERVICE BULLETINS

Check for any service bulletins.

>> GO TO 4.

4. CHECK COMPRESSOR BELT TENSION

Check compressor belt tension. Refer to EM-13, "Checking Drive Belts".

OK or NG

OK >> GO TO 5.
NG >> Adjust or replace A/C compressor belt.

5. CHECK REFRIGERANT PRESSURE

Check refrigerant pressure with manifold gauge connected. Refer to MTC-45, "Insufficient Cooling".

OK or NG

OK >> GO TO 6.
NG >> Perform trouble diagnosis for unusual pressure. Refer to MTC-45, "Insufficient Cooling".

6. CHECK MAGNET CLUTCH CIRCUIT

Perform diagnostic procedure for the magnetic clutch. Refer to "DIAGNOSTIC PROCEDURE FOR MAGNET CLUTCH".

OK or NG

OK >> If the symptom still exists, perform a complete operational check. Refer to MTC-30, "Operational Check". If other symptoms exist, refer to MTC-22, "How to Perform Trouble Diagnosis for Quick and Accurate Repair".

NG >> Repair as necessary.

SYSTEM DESCRIPTION

Thermo control amp. controls A/C compressor operation by intake air temperature and signal from ECM.
The defrost A/C switch controls A/C compressor operation by the BCM when the mode switch is turned to the (DEF) position.

Low Temperature Protection Control

When intake air temperatures are higher than 4°C (39°F), the compressor turns ON. The compressor turns OFF when intake air temperatures are lower than 2°C (36°F).

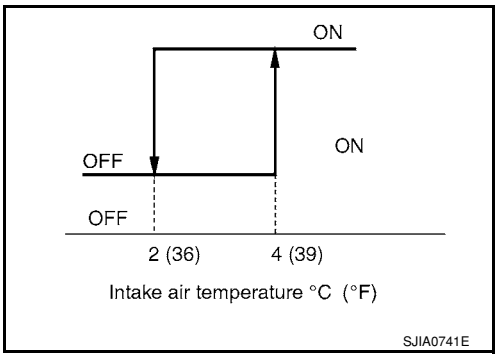

DIAGNOSTIC PROCEDURE FOR MAGNET CLUTCH

SYMPTOM: Magnet clutch does not engage in A/C, defrost/foot, or defrost mode.

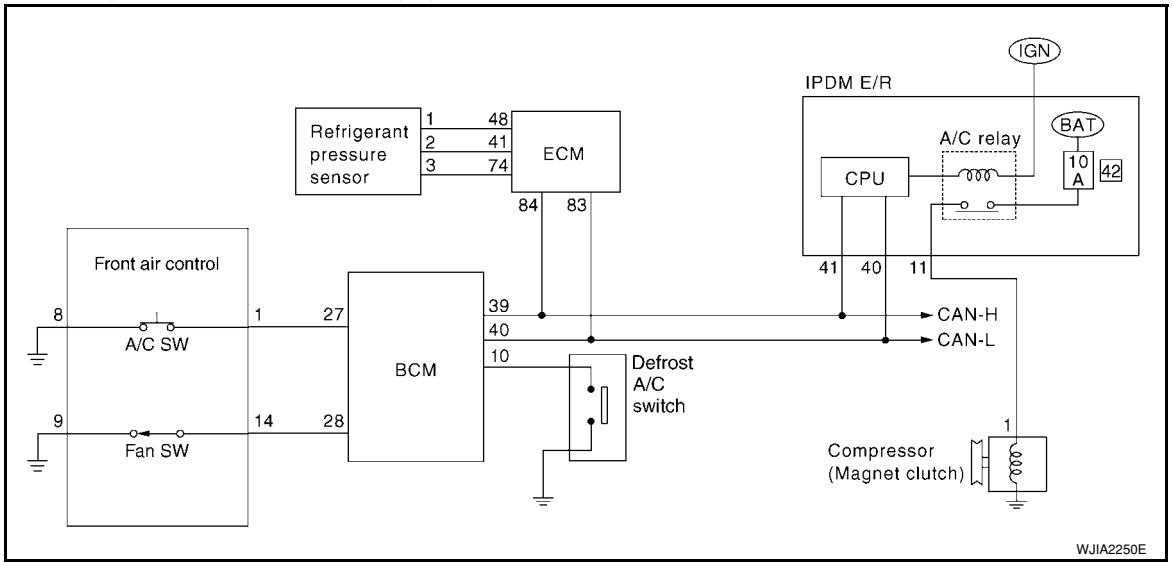

1. PERFORM AUTO ACTIVE TEST

Refer to PG-19, "Auto Active Test".

Does the magnet clutch operate?

YES >> GO TO 5.

NO >> Check 10A fuse (No. 42, located in the IPDM E/R). Refer to PG-22, "IPDM E/R Terminal Arrangement".
- If fuse is OK, GO TO 2.
- If fuse is NG, replace fuse and check harness for short circuit. Repair or replace if necessary.

2. CHECK POWER SUPPLY FOR IPDM E/R

Check power supply to 10A fuse (No. 42 located in the IPDM E/R).

:Battery voltage should exist

OK or NG

OK >> GO TO 3.
NG >> Check harness for open circuit. Repair or replace if necessary.

3. CHECK POWER SUPPLY FOR A/C COMPRESSOR

1. Disconnect A/C compressor connector.
2. Start the engine.
3. Turn blower control dial and A/C switch ON.
4. Check voltage between A/C compressor harness connector F3 terminal 1 and ground.

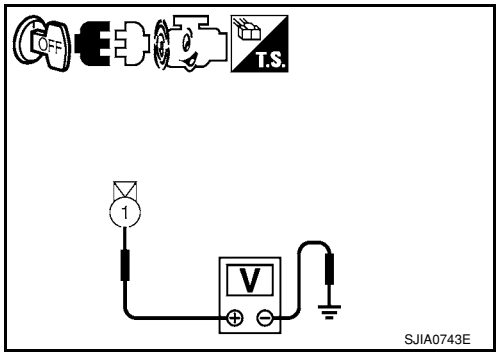

1 - Ground :Battery voltage

OK or NG

OK >> Replace magnet clutch. Refer to MTC-78, "Removal and Installation of Compressor"
NG >> GO TO 4.

4. CHECK CIRCUIT CONTINUITY BETWEEN IPDM E/R AND COMPRESSOR

1. Turn ignition switch OFF.
2. Disconnect IPDM E/R connector.
3. Check continuity between A/C compressor harness connector F3 (A) terminal 1 and IPDM E/R harness connector E43 (B) terminal 11.

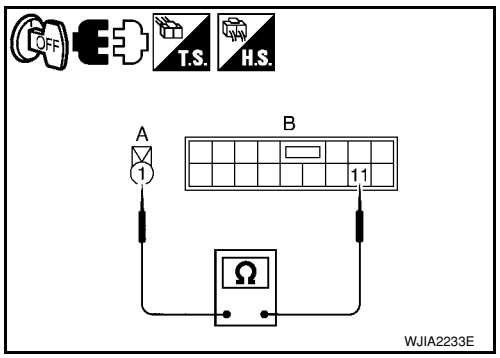

1 - 11 :Continuity should exist

OK or NG

OK >> Replace IPDM E/R. Refer to PG-26, "Removal and Installation of IPDM E/R"
NG >> Repair harness or connector.

5. CHECK DEFROST A/C SWITCH

1. Start the engine.
2. Turn the mode control dial to (DEF) position.

Does the magnet clutch operate

OK >> GO TO 6.
NG >> GO TO 23.

6. CHECK BCM INPUT (COMPRESSOR ON) SIGNAL

1. Turn ignition switch OFF.
2. Check compressor ON/OFF signal. Refer to MTC-22, "CONSULT-III Function (BCM)".

A/C SW ON : AIR COND SW ON
A/C SW OFF : AIR COND SW OFF

OK or NG

OK >> GO TO 8.
NG >> GO TO 7.

7. CHECK CIRCUIT CONTINUITY BETWEEN FRONT AIR CONTROL AND BCM

1. Turn ignition switch OFF.
2. Disconnect front air control and BCM connector.
3. Check continuity between front air control harness connector M33 (A) terminal 1and BCM harness connector M18 (B) terminal 27.

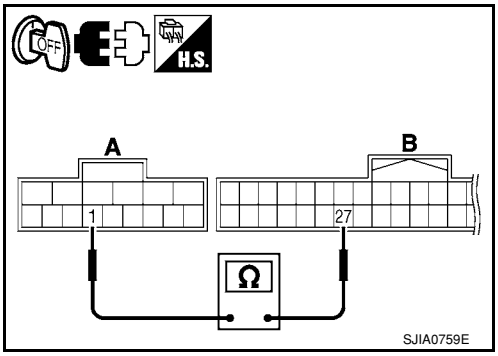

1 - 27 :Continuity should exist

OK or NG

OK >> GO TO 8.
NG >> Repair harness or connector.

8. CHECK REFRIGERANT PRESSURE SENSOR

1. Reconnect front air control connector and BCM connector.
2. Check refrigerant pressure sensor. Refer to EC-541.

.OK or NG

OK >> • WITH CONSULT-III
GO TO 9.
• WITHOUT CONSULT-III
GO TO 10.
NG >> Replace as necessary.

9. CHECK BCM INPUT (FAN ON) SIGNAL

Check FAN ON/OFF signal. Refer to MTC-22, "CONSULT-III Function (BCM)".

FAN CONTROL DIAL ON : FAN ON SIG ON
FAN CONTROL DIAL OFF : FAN ON SIG OFF

OK or NG

OK >> GO TO 12.
NG >> GO TO 10.

10. CHECK BCM INPUT (FAN ON) SIGNAL

1. Turn ignition switch ON.
2. Turn blower control dial to "1" position.
3. Confirm fan on signal between front air control harness connector M33 terminal 14 and ground using oscilloscope.

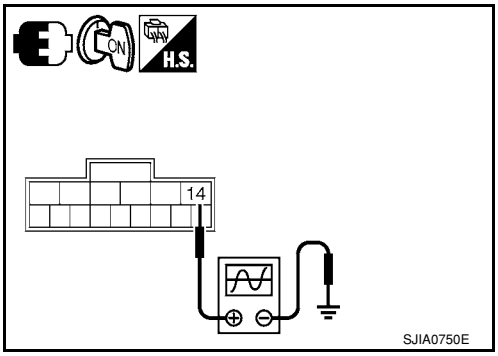

Terminals			Voltage (Approx.)
(+)		(-)	
Connector	Terminal		
Front air control: M33	14	Ground	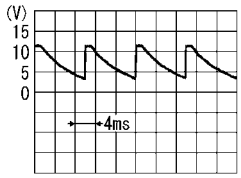 ZJIA0583J

OK or NG

OK >> GO TO 12.
NG >> GO TO 11.

11. CHECK CIRCUIT CONTINUITY BETWEEN BCM AND FRONT AIR CONTROL

1. Turn ignition switch OFF.
2. Disconnect front air control connector and BCM connector.
3. Check continuity between BCM harness connector M18 (A) terminal 28 and front air control harness connector M33 (B) terminal 14.

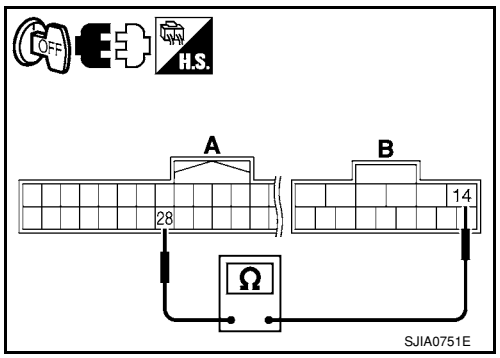

A		B		Continuity
Connector	Terminal	Connector	Terminal	
BCM: M18	28	Front air control: M33	14	Yes

OK or NG

OK >> GO TO 12.
NG >> Repair harness or connector.

12. CHECK FAN SWITCH CIRCUIT

1. Turn blower control dial to the OFF position.
2. Check continuity between front air control terminals 9 and 14.

9 - 14 :Continuity should exist

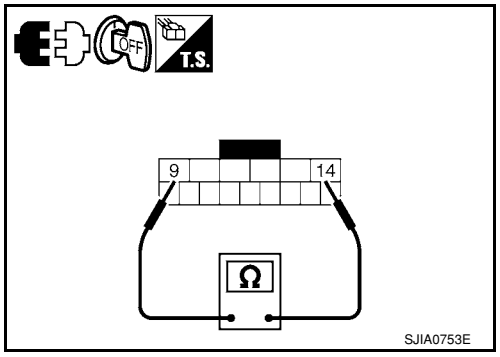

OK or NG

OK >> GO TO 13.
NG >> Replace front air control. Refer to MTC-55.

13. CHECK FRONT AIR CONTROL GROUND CIRCUIT

Check continuity between front air control harness connector M33 terminal 9 and ground.

9 - Ground :Continuity should exist

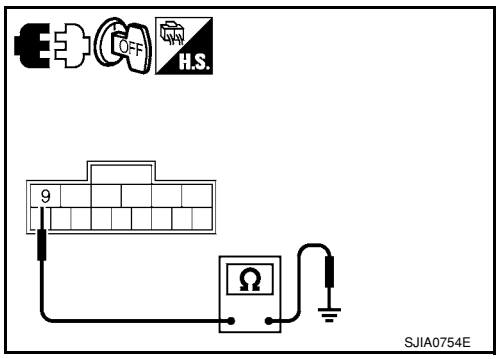

OK or NG

OK >> GO TO 14.
NG >> Repair harness or connector.

14. CHECK BCM INPUT (COMPRESSOR ON) SIGNAL

1. Reconnect BCM connector and front air control connectors.
2. Turn ignition switch ON.
3. Turn blower control dial clockwise to position "1".
4. Confirm compressor on signal between front air control harness connector M33 terminal 1 and ground using oscilloscope.

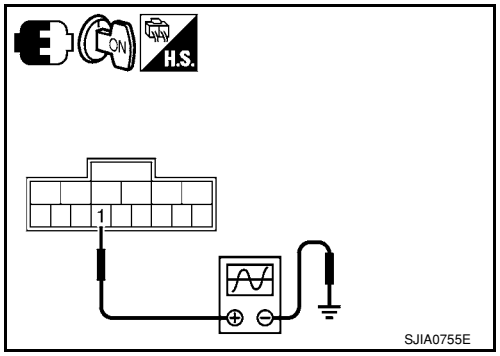

Terminals			Voltage (Approx.)
(+)		(-)	
Connector	Terminal		
Front air control: M33	1	Ground	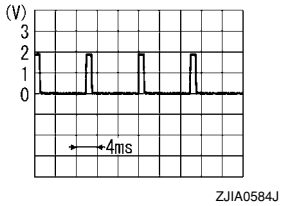

OK or NG

OK >> GO TO 15.
NG >> GO TO 17.

15. CHECK A/C SWITCH CIRCUIT

1. Turn ignition switch OFF.
2. Disconnect front air control connector.
3. While pressing the A/C switch, check continuity between front air control terminals 1 and 8.

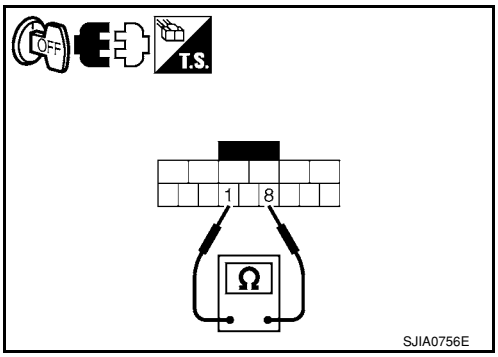

1 - 8 :Continuity should exist

OK or NG

OK >> GO TO 16.
NG >> Replace front air control. Refer to MTC-55.

16. CHECK FRONT AIR CONTROL GROUND CIRCUIT

Check continuity between front air control harness connector M33 terminal 8 and ground.

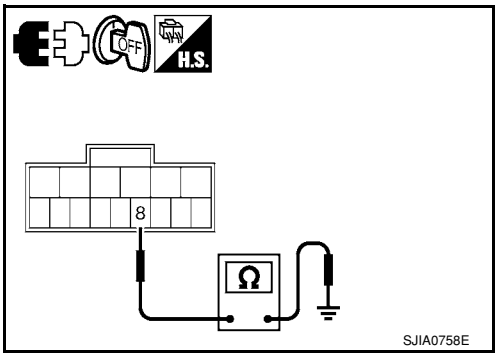

8 - Ground :Continuity should exist

OK or NG

OK >> GO TO 17.
NG >> Repair harness or connector.

17. CHECK POWER SUPPLY FOR THERMO CONTROL AMP.

1. Turn ignition switch OFF.
2. Disconnect thermo control amp. connector.
3. Turn ignition switch ON.
4. Confirm thermo amp signal between thermo control amp. harness connector M42 terminal 3 and ground using oscilloscope.

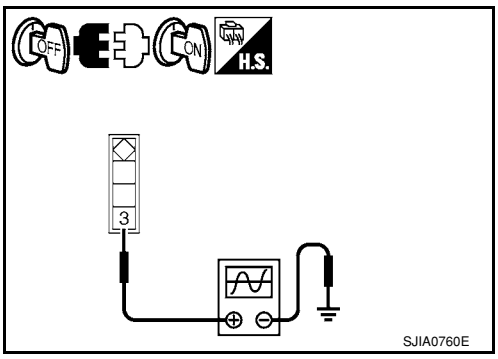

Terminals			Voltage (Approx.)
(+)		(-)	
Connector	Terminal		
Thermo control amp.: M42	3	Ground	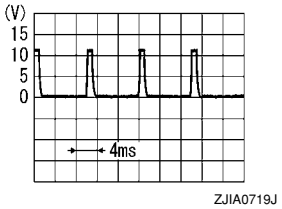

OK or NG

OK >> • GO TO 18 (with CVT).
• GO TO 19 (without CVT).

NG >> GO TO 21.

18. CHECK THERMO CONTROL AMP. GROUND CIRCUIT

1. Turn ignition switch OFF.
2. Check continuity between thermo control amp. harness connector M42 terminal 2 and ground.

2 - Ground :Continuity should exist

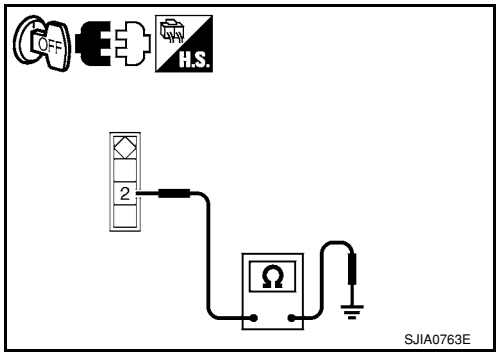

OK or NG

OK >> Repair thermo control amp. jumper as necessary.

NG >> Repair harness or connector.

19. CHECK POWER SUPPLY FOR THERMO CONTROL AMP.

Check voltage between thermo control amp. harness connector M42 terminal 1 and ground.

1 - Ground :Battery voltage

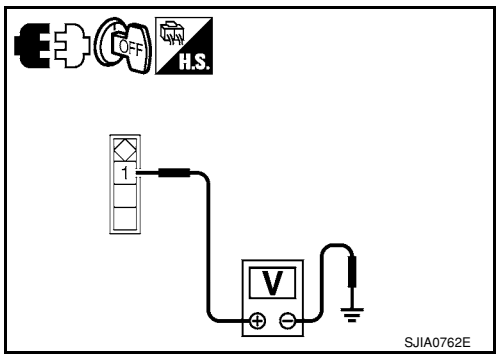

OK or NG

OK >> GO TO 20.

NG >> Check power supply circuit and 10A fuse [No. 16, located in the fuse block (JB)]. Refer to PG-72.
• If fuse is OK, check harness for open circuit. Repair or replace if necessary.
• If fuse is NG, replace fuse and check harness for short circuit. Repair or replace if necessary.

20. CHECK THERMO CONTROL AMP. GROUND CIRCUIT

1. Turn ignition switch OFF.
2. Check continuity between thermo control amp. harness connector M42 terminal 2 and ground.

2 - Ground :Continuity should exist

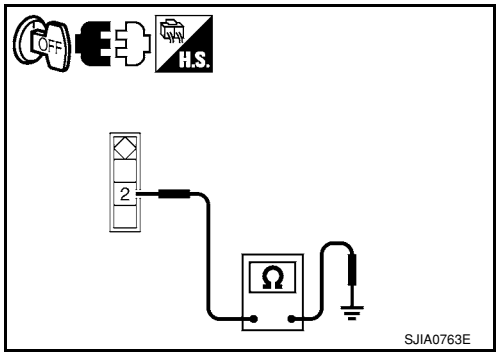

OK or NG

OK >> Replace thermo control amp. Refer to MTC-57.

NG >> Repair harness or connector.

21. CHECK CIRCUIT CONTINUITY BETWEEN THERMO CONTROL AMP. AND BCM

1. Turn ignition switch OFF.
2. Disconnect BCM connector.
3. Check continuity between thermo control amp. harness connector M42 (A) terminal 3 and BCM harness connector M18 (B) terminal 26.

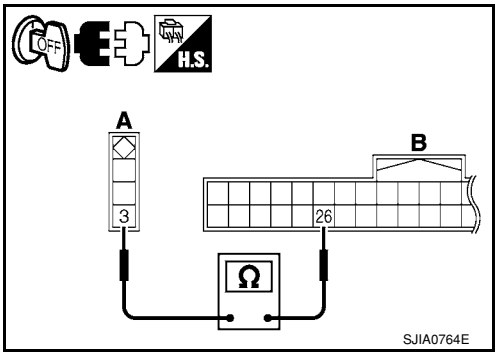

3 - 26 **:Continuity should exist**

OK or NG

OK >> GO TO 22.
NG >> Repair harness or connector.

22. CHECK CAN COMMUNICATION

Check CAN communication. Refer to LAN-15, "Trouble Diagnosis Flow Chart".
- BCM – ECM
- ECM – IPDM E/R

OK or NG

OK >> Replace BCM. Refer to BCS-18, "Removal and Installation of BCM".
NG >> Repair or replace malfunctioning part(s).

23. CHECK DEFROST A/C SWITCH CIRCUIT

1. Turn ignition switch OFF.
2. Disconnect BCM connector.
3. Press the defrost A/C switch.
   NOTE:
   The defrost A/C switch is located on back side of the front air control.
4. Check continuity between BCM harness connector M18 terminal 10 and ground.

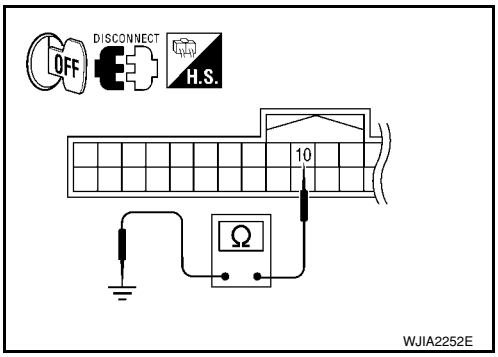

10 - Ground **:Continuity should exist**

OK or NG

OK >> Replace BCM. Refer to BCS-18, "Removal and Installation of BCM".
NG >> GO TO 24.

24. CHECK CIRCUIT CONTINUITY BETWEEN DEFROST A/C SWITCH AND BCM

1. Disconnect defrost A/C switch connector.
2. Check continuity between BCM harness connector M18 (B) terminal 10 and defrost A/C switch harness connector M41 (A) terminal 15.

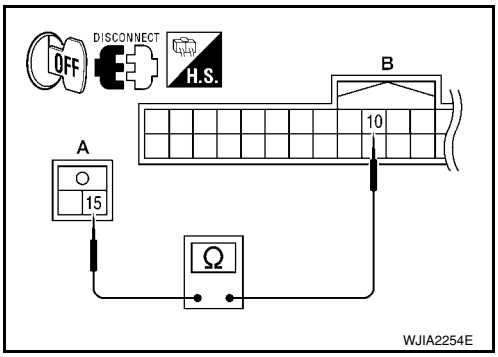

10 - 15 **:Continuity should exist**

OK or NG

OK >> GO TO 25.
NG >> Repair harness or connector.

25. CHECK CIRCUIT CONTINUITY BETWEEN DEFROST A/C SWITCH AND GROUND

Check continuity between A/C defrost switch harness connector M41 terminal 16 and ground.

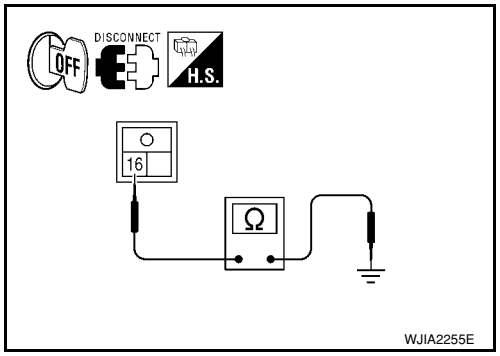

16 - Ground :Continuity should exist

OK or NG

OK >> Replace defrost A/C switch.
NG >> Repair harness or connector.

Insufficient Cooling

INFOID:0000000001704306

SYMPTOM: Insufficient cooling

INSPECTION FLOW

1. CONFIRM SYMPTOM BY PERFORMING OPERATIONAL CHECK - TEMPERATURE DECREASE

1. Turn temperature control dial counterclockwise to maximum cold position.
2. Check for cold air at discharge air outlets.

Can the symptom be duplicated?

YES >> GO TO 3.
NO >> GO TO 2.

2. CHECK FOR ANY SYMPTOMS

Perform a complete operational check for any symptoms. Refer to MTC-30, "Operational Check".

Does another symptom exist?

YES >> Refer to MTC-22, "How to Perform Trouble Diagnosis for Quick and Accurate Repair".
NO >> System OK.

3. CHECK FOR SERVICE BULLETINS

Check for any service bulletins.

>> GO TO 4.

4. CHECK COMPRESSOR DRIVE BELT TENSION

Check compressor belt tension. Refer to EM-13, "Checking Drive Belts".

OK or NG

OK >> GO TO 5.
NG >> Adjust or replace compressor belt. Refer to EM-13, "Removal and Installation".

5. CHECK AIR MIX DOOR CABLE

Check and verify air mix door cable operation. Refer to MTC-64, "Air Mix Door Cable Adjustment".

Does air mix door operate correctly?

YES >> GO TO 6.
NO >> Repair or replace as necessary.

6. CHECK COOLING FAN MOTOR OPERATION

Check and verify cooling fan motor for smooth operation. Refer to EC-412, "System Description".

Does cooling fan motor operate correctly?

YES >> GO TO 7.
NO >> Check cooling fan motor. Refer to EC-412.

7. CHECK FOR EVAPORATOR FREEZE UP

Start engine and run A/C. Check for evaporator freeze up.

Does evaporator freeze up?

YES >> Perform performance test diagnoses. Refer to "PERFORMANCE TEST DIAGNOSIS".

NO >> GO TO 8.

8. CHECK REFRIGERANT PRESSURE

Check refrigerant pressure with manifold gauge connected. Refer to "Test Reading".

OK or NG

OK >> GO TO 9.
NG >> Perform performance test diagnoses. Refer to "PERFORMANCE TEST DIAGNOSIS".

9. CHECK AIR DUCTS

Check ducts for air leaks.

OK or NG

OK >> If the symptom still exists, perform a complete operational check. Refer to MTC-30, "Operational Check". If other symptoms exist, refer to MTC-22, "How to Perform Trouble Diagnosis for Quick and Accurate Repair".
NG >> Repair air leaks.

PERFORMANCE TEST DIAGNOSIS

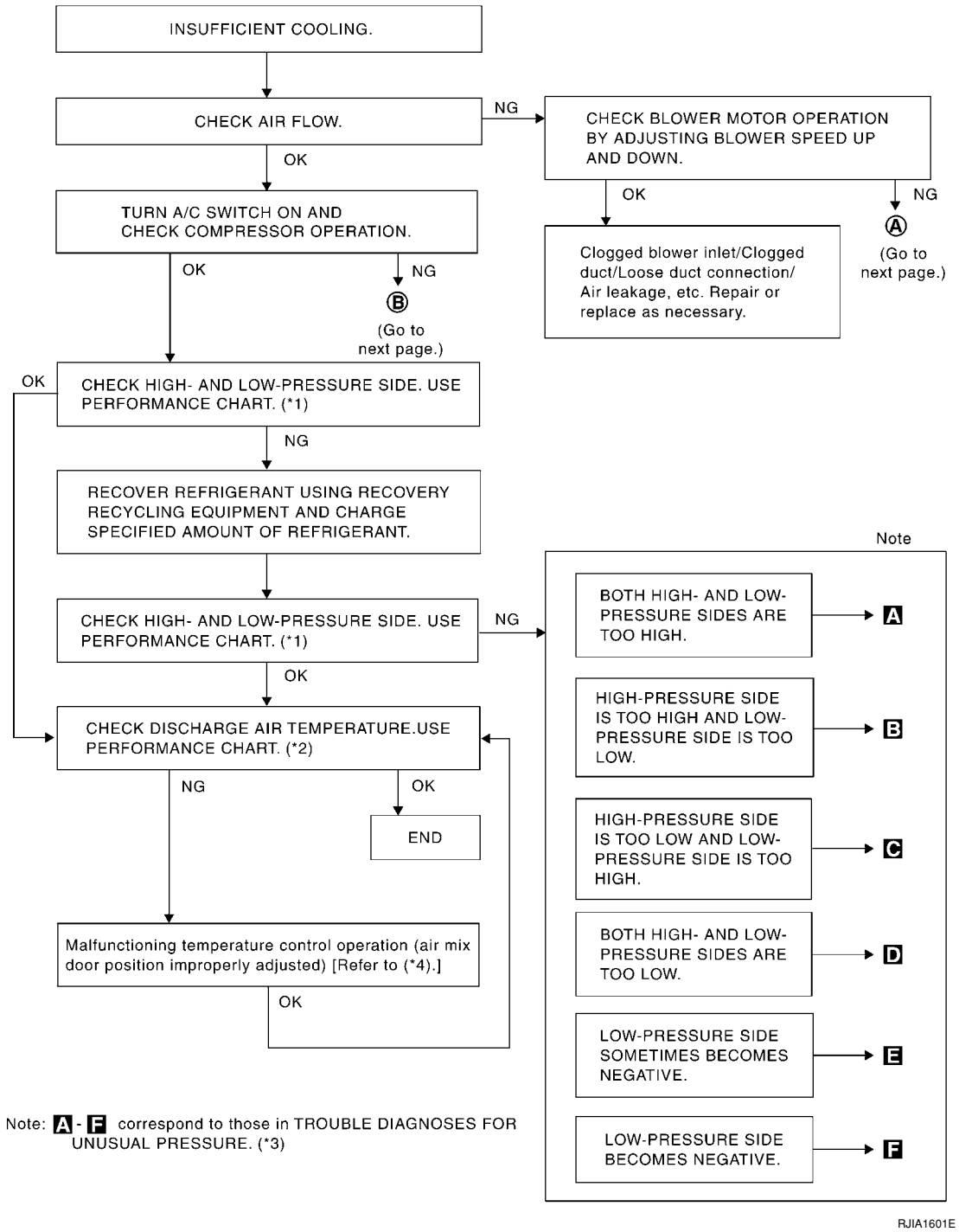

*1 "PERFORMANCE CHART"

*2 "Test Reading"

*3 "TROUBLE DIAGNOSIS FOR UNUSUAL PRESSURE "

*4 MTC-64, "Air Mix Door Cable Adjustment"

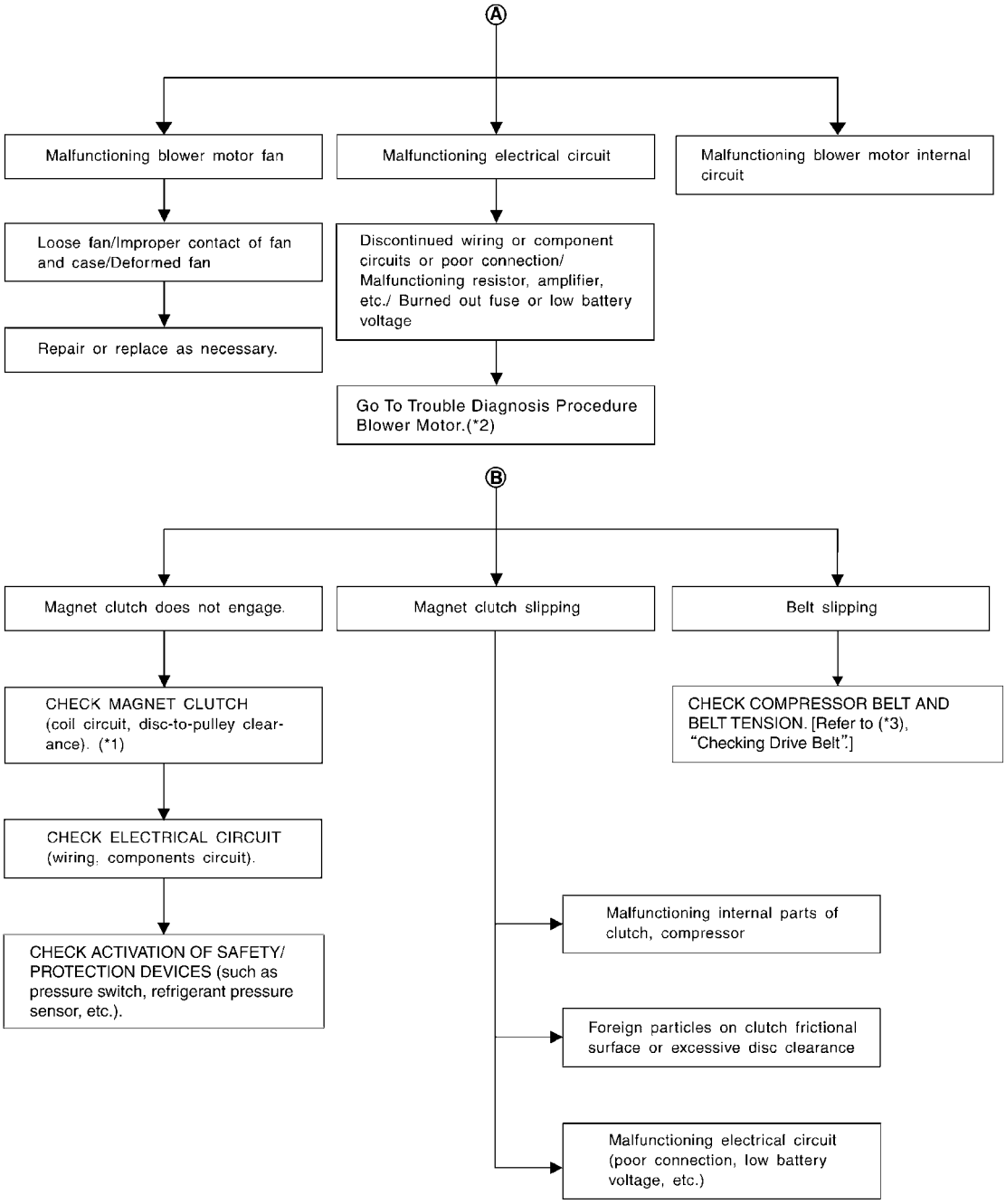

*1 MTC-78, "Removal and Installation of Compressor" *2 MTC-33, "Front Blower Motor Circuit" *3 EM-13, "Checking Drive Belts"

PERFORMANCE CHART

Test Condition

Testing must be performed as follows:

Vehicle condition	Indoors or in the shade (in a well-ventilated place)
Doors	Closed
Door window	Open
Hood	Open

Vehicle condition	Indoors or in the shade (in a well-ventilated place)
TEMP.	Max. COLD
Mode control dial	(Ventilation) set
Intake door lever	(Recirculation) set
Blower speed	Max. speed set
Engine speed	Idle speed
Operate the air conditioning system for 10 minutes before taking measurements.	

Test Reading

Recirculating-to-discharge Air Temperature Table

Inside air (Recirculating air) at blower assembly inlet		Discharge air temperature at center ventilator °C (°F)
Relative humidity %	Air temperature °C (°F)	
50 - 60	20 (68)	7.2 - 9.1 (45 - 48)
	25 (77)	11.4 - 13.8 (53 - 57)
	30 (86)	15.5 - 18.4 (60 - 65)
	35 (95)	20.3 - 23.7 (69 - 75)
60 - 70	20 (68)	9.1 - 10.9 (48 - 52)
	25 (77)	13.8 - 16.2 (57 - 61)
	30 (86)	18.4 - 21.3 (65 - 70)
	35 (95)	23.7 - 27.1 (75 - 81)

Ambient Air Temperature-to-operating Pressure Table

Ambient air		High-pressure (Discharge side) kPa (bar, kg/cm^2 , psi)	Low-pressure (Suction side) kPa (bar, kg/cm^2 , psi)
Relative humidity %	Air temperature °C (°F)		
50 - 70	20 (68)	843 - 1,036 *1 (11.08 - 13.63, 8.6 - 10.6, 122 - 150)	159.0 - 194.0 (1.59 - 1.94, 1.62 - 1.98, 23.1 - 28.1)
	25 (77)	1,094 - 1,338 *1 (10.94 - 13.38, 11.2 - 13.6, 159 - 194)	196.3 - 240.0 (1.96 - 2.40, 2.00 - 2.45, 28.5 - 34.8)
	30 (86)	1,298 - 1,590 *1 (12.98 - 15.90, 13.2 - 16.2, 188 - 231)	248.0 - 302.7 (2.48 - 3.03, 2.53 - 3.09, 36.0 - 43.9)
	35 (95)	1,383 - 1,688 *2 (13.83 - 16.88, 14.1 - 17.2, 201 - 245)	308.8 - 377.4 (3.09 - 3.77, 3.15 - 3.85, 44.8 - 54.7)
	40 (104)	1,628 - 1,988 *2 (16.28 - 19.88, 16.6 - 20.3, 236 - 288)	377.4 - 461.2 (3.77 - 4.61, 3.85 - 4.70, 54.7 - 66.8)

*1: With blower control dial in the "1" position
*2: With blower control dial in the "4" position.

TROUBLE DIAGNOSIS FOR UNUSUAL PRESSURE

Whenever system's high and/or low side pressure(s) is/are unusual, diagnose using a manifold gauge. The marker above the gauge scale in the following tables indicates the standard (usual) pressure range. Since the standard (usual) pressure, however, differs from vehicle to vehicle, refer to above table (Ambient air temperature-to-operating pressure table).

Both High- and Low-pressure Sides are Too High

Gauge indication	Refrigerant cycle	Probable cause	Corrective action
Both high- and low-pressure sides are too high. 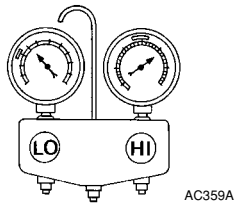	Pressure is reduced soon after water is splashed on condenser.	Excessive refrigerant charge in refrigeration cycle.	Reduce refrigerant until specified pressure is obtained.
	Air suction by cooling fan is insufficient.	Insufficient condenser cooling performance. ↓ 1. Condenser fins are clogged. 2. Improper fan rotation of cooling fan.	• Clean condenser. • Check and repair cooling fan if necessary.
	• Low-pressure pipe is not cold. • When compressor is stopped high-pressure value quickly drops by approximately 196 kPa (1.96 bar, 2 kg/cm^2 , 28 psi). It then decreases gradually thereafter.	Poor heat exchange in condenser (After compressor operation stops, high-pressure decreases too slowly.). ↓ Air in refrigeration cycle.	Evacuate repeatedly and recharge system.
	Engine tends to overheat.	Engine cooling systems malfunction.	Check and repair each engine cooling system.
	• An area of the low-pressure pipe is colder than areas near the evaporator outlet. • Plates are sometimes covered with frost.	• Excessive liquid refrigerant on low-pressure side. • Excessive refrigerant discharge flow. • Expansion valve is open a little compared with the specification. ↓ Improper expansion valve adjustment.	Replace expansion valve.

High-pressure Side is Too High and Low-pressure Side is Too Low

Gauge indication	Refrigerant cycle	Probable cause	Corrective action
High-pressure side is too high and low-pressure side is too low. 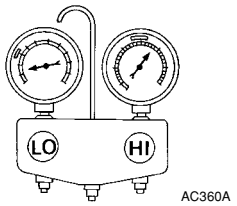	Upper side of condenser and high-pressure side are hot, however, liquid tank is not so hot.	High-pressure tube or parts located between compressor and condenser are clogged or crushed.	• Check and repair or replace malfunctioning parts. • Check oil for contamination.

High-pressure Side is Too Low and Low-pressure Side is Too High

Gauge indication	Refrigerant cycle	Probable cause	Corrective action
High-pressure side is too low and low-pressure side is too high. 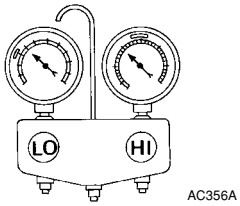	High- and low-pressure sides become equal soon after compressor operation stops.	Compressor pressure operation is improper. ↓ Damaged inside compressor packings.	Replace compressor.
	No temperature difference between high- and low-pressure sides.	Compressor pressure operation is improper. ↓ Damaged inside compressor packings.	Replace compressor.

Both High- and Low-pressure Sides are Too Low

Gauge indication	Refrigerant cycle	Probable cause	Corrective action
Both high- and low-pressure sides are too low. 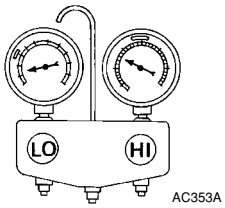	• There is a big temperature difference between liquid tank outlet and inlet. Outlet temperature is extremely low. • Liquid tank inlet and expansion valve are frosted.	Liquid tank inside is slightly clogged.	• Replace liquid tank. • Check oil for contamination.
	• Temperature of expansion valve inlet is extremely low as compared with areas near liquid tank. • Expansion valve inlet may be frosted. • Temperature difference occurs somewhere in high-pressure side.	High-pressure pipe located between liquid tank and expansion valve is clogged.	• Check and repair malfunctioning parts. • Check oil for contamination.
	Expansion valve and liquid tank are warm or only cool when touched.	Low refrigerant charge. ↓ Leaking fittings or components	Check refrigerant for leaks. Refer to MTC-84, "Checking of Refrigerant Leaks" .
	There is a big temperature difference between expansion valve inlet and outlet while the valve itself is frosted.	Expansion valve closes a little compared with the specification. ↓ 1. Improper expansion valve adjustment. 2. Malfunctioning expansion valve. 3. Outlet and inlet may be clogged.	• Remove foreign particles by using compressed air. • Replace expansion valve. • Check oil for contamination.
	An area of the low-pressure pipe is colder than areas near the evaporator outlet.	Low-pressure pipe is clogged or crushed.	• Check and repair malfunctioning parts. • Check oil for contamination.
	Air flow volume is not enough or is too low.	Evaporator is frozen.	• Check thermo control amp. Refer to MTC-37, "Magnet Clutch Circuit (If Equipped)" . • Replace compressor. • Repair evaporator fins. • Replace evaporator. • Refer to MTC-33, "Front Blower Motor Circuit" .

Low-pressure Side Sometimes Becomes Negative

Gauge indication	Refrigerant cycle	Probable cause	Corrective action
Low-pressure side sometimes becomes negative. 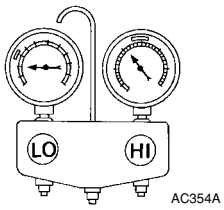	• Air conditioning system does not function and does not cyclically cool the compartment air. • The system constantly functions for a certain period of time after compressor is stopped and restarted.	Refrigerant does not discharge cyclically. ↓ Moisture is frozen at expansion valve outlet and inlet. ↓ Water is mixed with refrigerant.	• Drain water from refrigerant or replace refrigerant. • Replace liquid tank.

Low-pressure Side Becomes Negative

Gauge indication	Refrigerant cycle	Probable cause	Corrective action
Low-pressure side becomes negative. 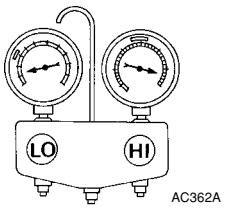	Liquid tank or front/rear side of expansion valve's pipe is frosted or dewed.	High-pressure side is closed and refrigerant does not flow. ↓ Expansion valve or liquid tank is frosted.	Leave the system at rest until no frost is present. Start it again to check whether or not the malfunction is caused by water or foreign particles. • If water is the cause, initially cooling is okay. Then the water freezes causing a blockage. Drain water from refrigerant or replace refrigerant. • If due to foreign particles, remove expansion valve and remove the particles with dry and compressed air (not shop air). • If either of the above methods cannot correct the malfunction, replace expansion valve. • Replace liquid tank. • Check oil for contamination.

Insufficient Heating

INFOID:0000000001704307

SYMPTOM: Insufficient heating

INSPECTION FLOW

1.CONFIRM SYMPTOM BY PERFORMING OPERATIONAL CHECK - TEMPERATURE DECREASE

1. Turn temperature control dial clockwise to maximum heat position.
2. Check for hot air at discharge air outlets.

Can the symptom be duplicated?

YES >> GO TO 3.
NO >> GO TO 2.

2.CHECK FOR ANY SYMPTOMS

Perform a complete operational check for any symptoms. Refer to MTC-30, "Operational Check" .

Does another symptom exist?

YES >> Refer to MTC-22, "How to Perform Trouble Diagnosis for Quick and Accurate Repair" .
NO >> System OK.

3.CHECK FOR SERVICE BULLETINS

Check for any service bulletins.

>> GO TO 4.

4.CHECK COOLANT SYSTEM

1. Check engine coolant level. Refer to CO-8 .
2. Check hoses for leaks or kinks.
3. Check Radiator cap. Refer to CO-13, "Checking Radiator Cap" .

OK or NG

OK >> GO TO 5.
NG >> Repair/replace as necessary.

5.CHECK AIR MIX DOOR CABLE

Check air mix door cable operation. Refer to MTC-64, "Air Mix Door Cable Adjustment" .

OK or NG

YES >> GO TO 6.

NO >> Adjust or replace air mix door cable. Refer to MTC-64, "Air Mix Door Cable Adjustment" .

6. CHECK AIR DUCTS

Check ducts for air leaks.

OK or NG

OK >> GO TO 7.
NG >> Repair air leaks.

7. CHECK HEATER HOSE TEMPERATURES

1. Start engine and warm it up to normal operating temperature.
2. Touch both the inlet and outlet heater hoses.

Is the inlet hose hot and the outlet hose warm?

YES >> GO TO 8.
NO >> Both hoses warm: GO TO 9.

8. CHECK ENGINE COOLANT TEMPERATURE SENSOR

Check engine control temperature sensor. Refer to EC-187 .

OK or NG

OK >> System OK.
NG >> Repair or replace as necessary. Retest.

9. CHECK HEATER HOSES

Check heater hoses for proper installation.

OK or NG

OK >> GO TO 10.
NG >> Repair /replace as necessary. Retest GO TO 7.

10. BACK FLUSH HEATER CORE

1. Back flush heater core.
2. Drain the water from the system.
3. Refill system with new engine coolant. Refer to CO-8, "Changing Engine Coolant" .
4. Start engine and warm it up to normal operating temperature.
5. Touch both the inlet and outlet heater hoses.

Is the inlet hose hot and the outlet hose warm? YES or NO

YES >> System OK.
NO >> Replace heater core and refill engine coolant. Refer to MTC-67 .

Noise

INFOID:0000000001704308

SYMPTOM: Noise

INSPECTION FLOW

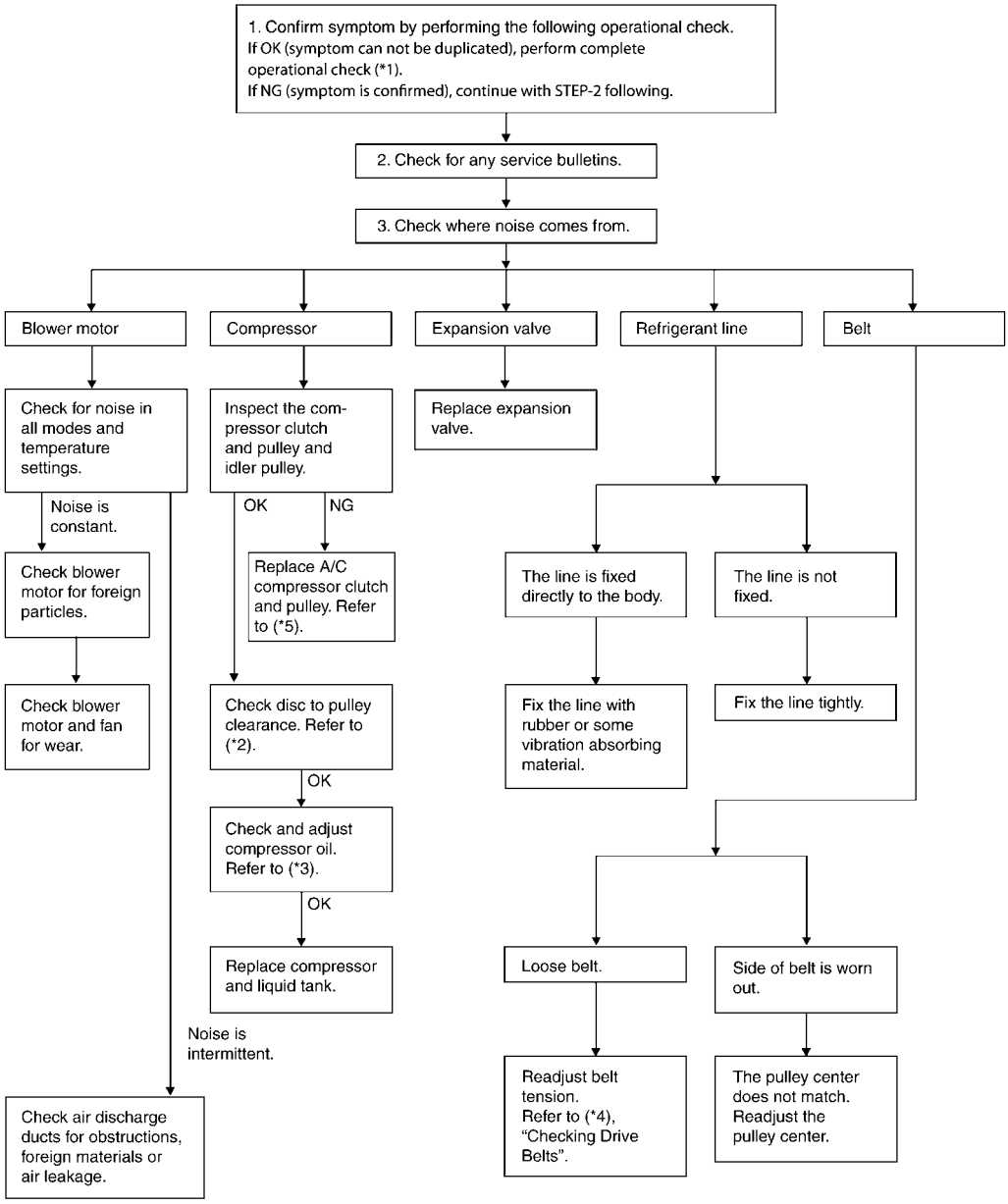

*1. MTC-30, "Operational Check"

*2. MTC-78, "Removal and Installation of Compressor"

*3. MTC-16, "Maintenance of Oil Quantity in Compressor"

*4. EM-13, "Checking Drive Belts"

*5. MTC-78, "Removal and Installation of Compressor"

CONTROLLER

Removal and Installation

INFOID:0000000001704309

REMOVAL

1. Remove cluster lid C and instrument finisher D. Refer to IP-10 .
2. Remove intake door lever knob. Refer to MTC-56, "Disassembly and Assembly" .
3. Remove mounting screws and clips, and then remove controller finisher.

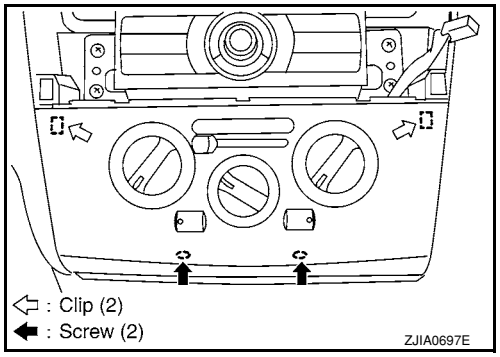

4. Remove mounting screws, and then pull out controller.

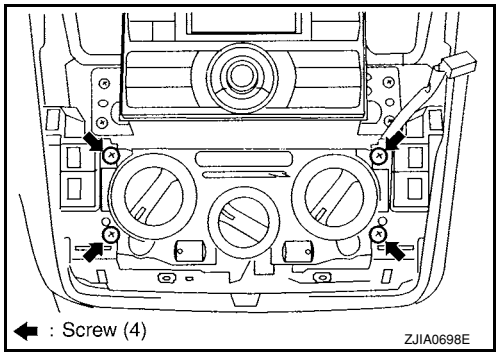

5. Remove instrument panel and pad. Refer to IP-10 .
6. Remove air mix door cable, mode door cable and intake door cable from A/C unit assembly.
7. Disconnect connector, and then remove controller.

INSTALLATION

Installation is in the reverse order of removal.

CAUTION:

Adjust the door cables during installation. Refer to MTC-63, "Intake Door Cable Adjustment" , MTC-65, "Mode Door Cable Adjustment" and MTC-64, "Air Mix Door Cable Adjustment" .

Disassembly and Assembly

INFOID:0000000001704310

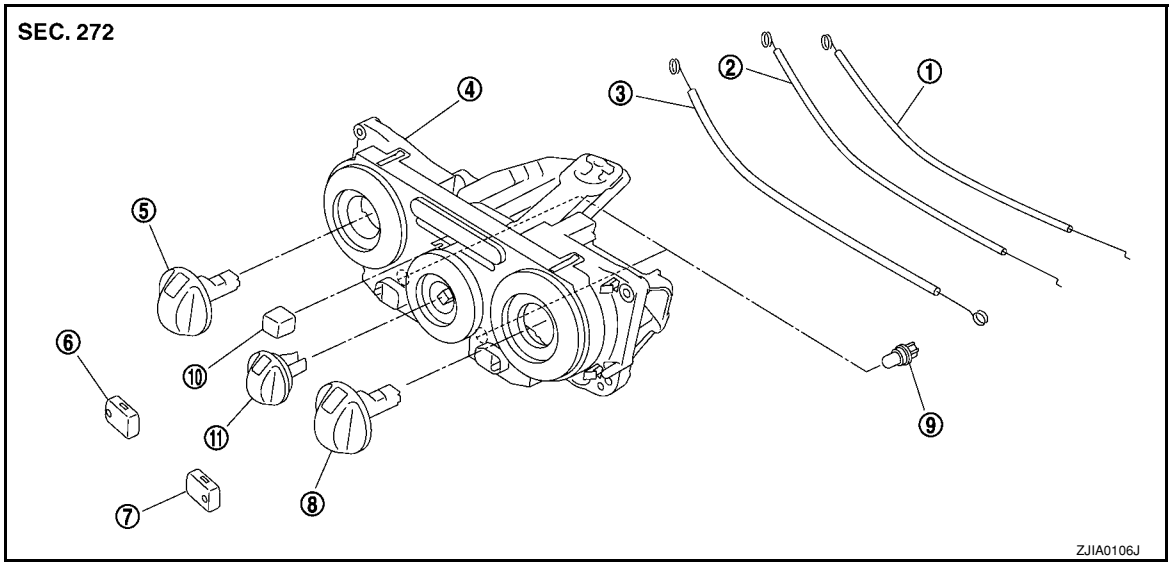

1. Air mix door cable
2. Intake door cable
3. Mode door cable
4. A/C controller assembly
5. Mode control dial
6. Rear DEF button
7. A/C button
8. Temperature control dial
9. Illumination bulb
10. Intake door lever knob
11. Fan control dial

CAUTION:

Install inner cable of each door cable to the corresponding lever, as shown in the figure. Press outer cable until it hooks on the tabs and becomes secure.

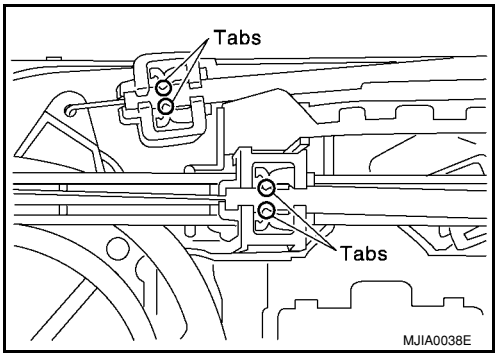

THERMO CONTROL AMPLIFIER

Removal and Installation

INFOID:0000000001704311

NOTE:
Only TYPE 1 systems are equipped with a thermo control amplifier.

REMOVAL

1. Remove evaporator. Refer to MTC-83, "Removal and Installation of Evaporator" .
   CAUTION:
   Cap or wrap the joint of the pipe with suitable material such as vinyl tape to avoid the entry of air.
2. Remove thermo control amp. (1) from evaporator (2).

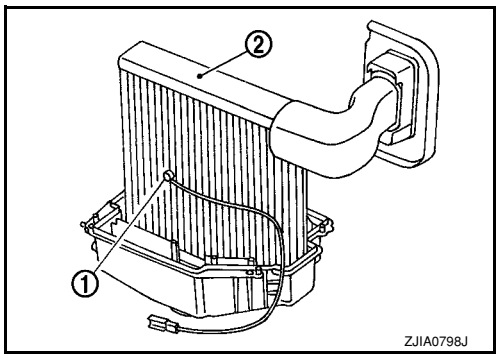

INSTALLATION

Installation is in the reverse order of removal.

CAUTION:
- **Replace O-rings for A/C piping with new ones, and apply compressor oil when installing.**
- **Mark the mounting position of thermo control amp.**
- **When recharging refrigerant, check for leaks.**

A/C UNIT ASSEMBLY

Removal and Installation

INFOID:0000000001704312

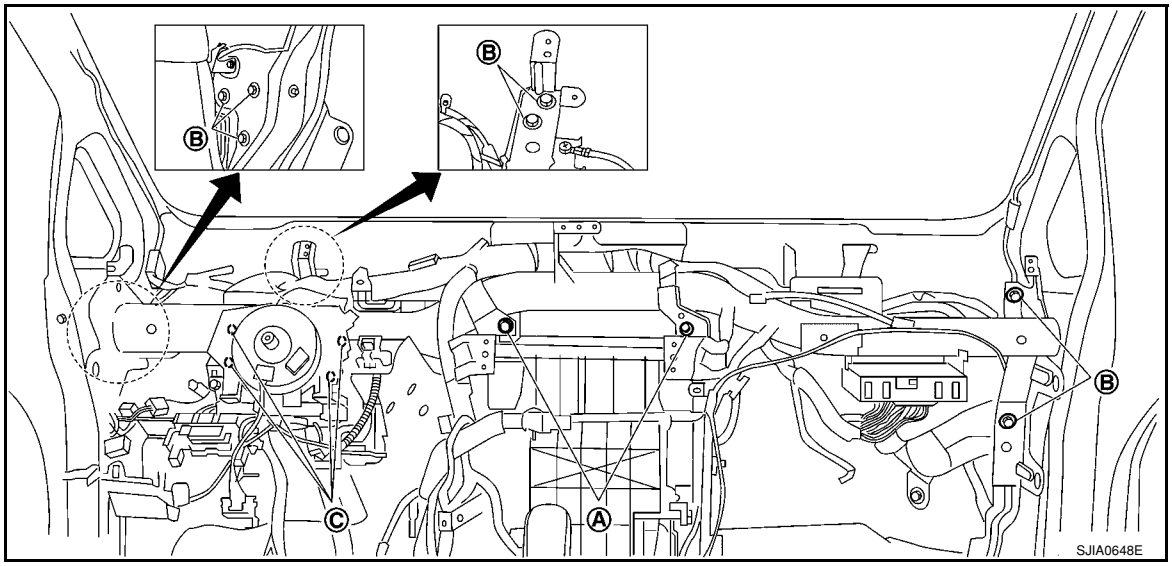

A. A/C unit assembly bolts B. Steering member bolts C. Steering column nuts

REMOVAL

1. Use a recovery/recycling equipment (for HFC-134a) to discharge refrigerant.
2. Drain coolant from cooling system. Refer to CO-8, "Changing Engine Coolant" .
3. Remove cowl top cover. Refer to EI-21 .
4. Remove lower dash insulator.
5. Remove bolt (A), and then disconnect low-pressure flexible hose (1) and high-pressure pipe (2) from evaporator.
   CAUTION:
   Cap or wrap the joint of the pipe with suitable material such as vinyl tape to avoid the entry of air.

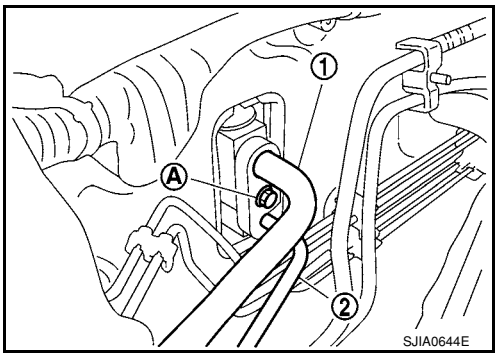

6. Remove clamps (A), and then disconnect heater hoses (1) from heater core.

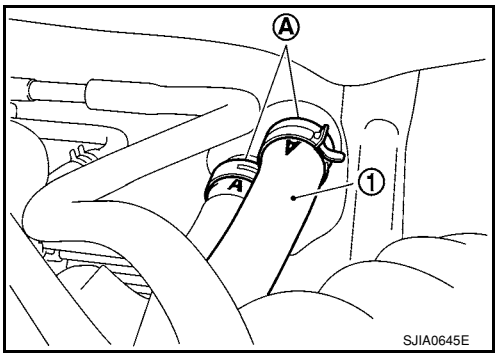

7. Remove console box assembly. Refer to IP-10 .

8. Remove instrument stay nuts (A) and harness clamps (B), and then remove instrument stay (1).

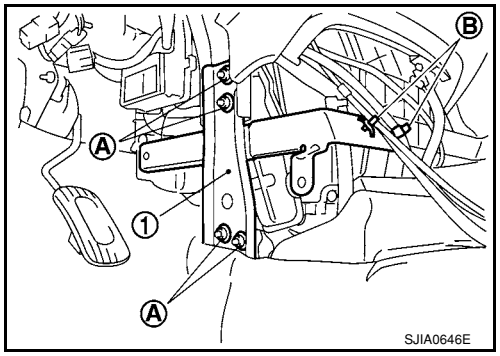

9. Disconnect thermo control amp. connector (1) for TYPE 1 systems as shown. Disconnect the thermo control amp. short connector for TYPE 2 systems.

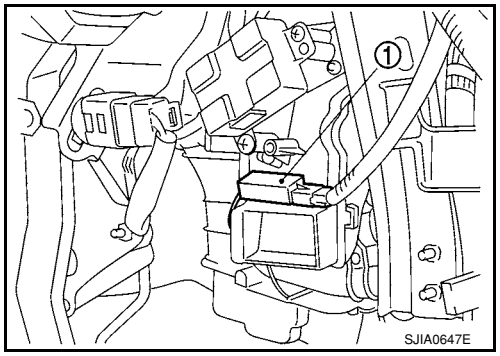

10. Remove instrument panel and pad. Refer to IP-10 .
11. Remove side ventilator ducts. Refer to MTC-69, "Removal and Installation" .
12. Remove center ventilator ducts. Refer to MTC-69, "Removal and Installation" .
13. Remove side kicking plates. Refer to EI-37 .
14. Disconnect the fuel filler door cable and the rear hatch door cable.
15. Remove A/C unit assembly bolts, steering member bolts, steering column nuts and harness clips.
16. Remove steering member, and then remove A/C unit assembly.

INSTALLATION

Installation is in the reverse order of removal.
- When filling radiator with coolant, refer to CO-8, "Changing Engine Coolant" .
- Recharge the refrigerant.

A/C unit assembly bolt	**: 6.9 N·m (0.7 kg-m, 61 in-lb)**
Steering member bolt	**: 12 N·m (1.25 kg-m, 9 ft-lb)**
Steering column nut	**: Refer to PS-9 .**

CAUTION:
- **Replace O-rings for A/C piping with new ones, and apply compressor oil when installing.**
- **When recharging refrigerant, check for leaks.**

Disassembly and Assembly

INFOID:0000000001704313

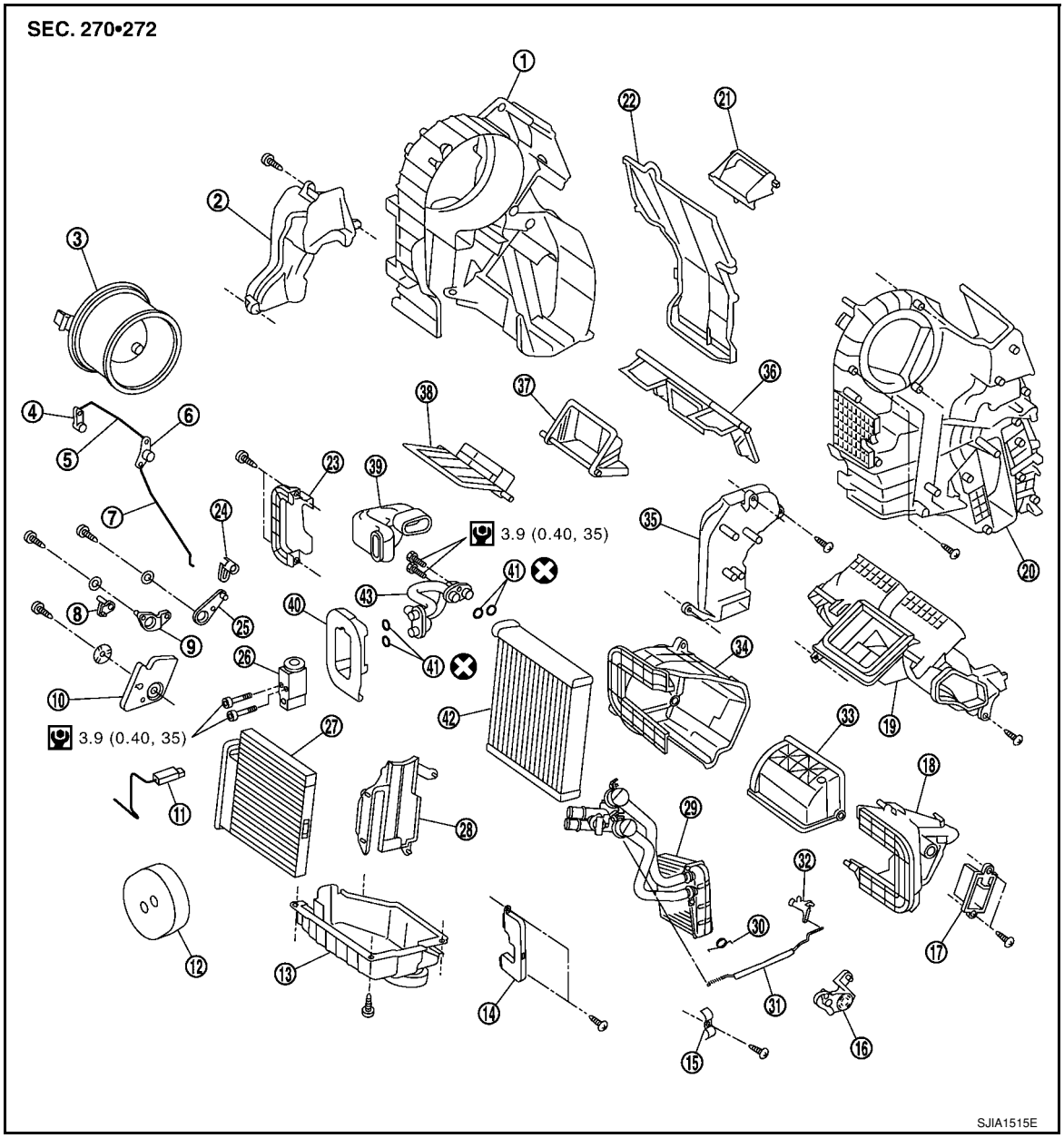

1.	Blower case (right)	2.	Foot duct (right)	3.	Blower motor
4.	Sub ventilator·defroster door lever	5.	Sub ventilator·defroster door rod	6.	Ventilator·defroster door lever
7.	Ventilator·defroster door rod	8.	Intake door lever	9.	Ventilator·defroster door link
10.	Main link	11.	Thermo control amp. (TYPE 1*)	12.	Heater pipe packing
13.	Lower blower case	14.	Heater pipe cover	15.	Heater pipe clip
16.	Intake door link	17.	Blower fan resistor	18.	Intake case (left)
19.	Center defroster duct	20.	Blower case (left)	21.	Cover
22.	Cover	23.	Expansion valve cover	24.	Foot door lever
25.	Foot door link	26.	Expansion valve	27.	Air conditioner filter
28.	Evaporator cover	29.	Heater core	30.	Spring
31.	Water valve rod	32.	Air mix door lever	33.	Intake door
34.	Intake case (right)	35.	Foot duct (left)	36.	Ventilator·defroster door
37.	Foot door	38.	Air mix door	39.	Seal

40. Expansion valve grommet
41. O-ring
42. Evaporator
43. Cooler pipe assembly

BLOWER MOTOR

Removal and Installation

INFOID:0000000001704314

REMOVAL

1. Remove instrument panel and pad. Refer to IP-10.
2. Remove side ventilator duct (right). Refer to MTC-69, "Removal and Installation".
3. Disconnect blower motor connector (1).
4. Push the flange holding hook (A) toward the blower motor (2), then rotate the blower motor (2) clockwise and remove it from the A/C unit assembly.
   CAUTION:
   When blower fan and blower motor are assembled, the balance is adjusted, do not disassemble to replace the individual parts.

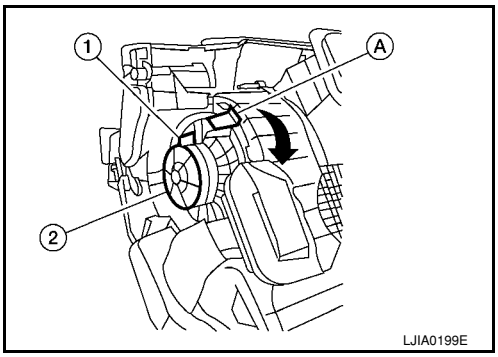

INSTALLATION

Installation is in the reverse order of removal.

CAUTION:

Rotate the blower motor until the blower motor flange holding hook locks securely in A/C unit assembly.

INTAKE DOOR

Intake Door Cable Adjustment

INFOID:0000000001704315

1. Remove instrument lower finisher. Refer to IP-10.
2. Remove outer cable of intake door cable (1) from clamp (A).
3. Set intake door lever to REC position.
4. Push intake door link (2) in the direction shown by the arrow, and then carefully pull outer cable to controller side, and install clamp (A).
5. Operate intake door lever to insure that inner cable moves smoothly.
   CAUTION:
   When clamping the outer cable, do not move the inner cable.

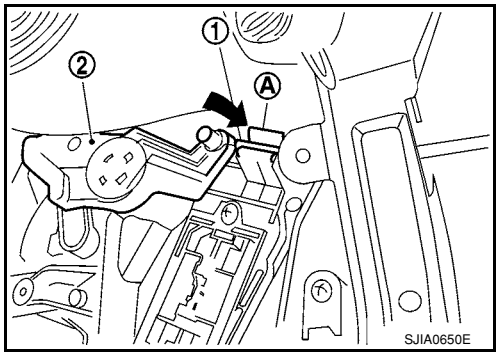

AIR MIX DOOR

Air Mix Door Cable Adjustment

INFOID:0000000001704316

1. Remove steering member. Refer to MTC-58.
2. Remove outer cable of air mix door cable (1) from clamp (A).
3. Set temperature control dial to full cold position.
4. Push air mix door lever (2) in the direction shown by arrow, and then carefully pull outer cable toward controller side, and install clamp (A).
5. Operate temperature control dial to insure that inner cable moves smoothly.
   CAUTION:
   When clamping the outer cable, do not move the inner cable.

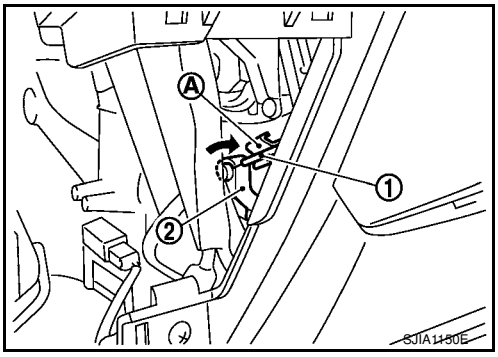

MODE DOOR

Mode Door Cable Adjustment

INFOID:0000000001704317

1. Remove glove box assembly and instrument lower cover (RH). Refer to IP-10.
2. Remove outer cable of mode door cable (1) from clamp (A).
3. Set mode control dial to VENT position.
4. Push main link (2) in the direction shown by the arrow, and then carefully pull outer cable to controller side, and install clamp (A).
5. Operate mode control dial to insure that inner cable moves smoothly.
   CAUTION:
   When clamping the outer cable, do not move the inner cable.

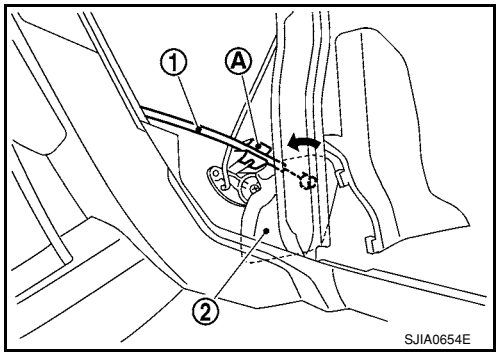

6. Turn mode control dial to each position.
7. Confirm that discharge air comes out according to the air distribution table. Refer to MTC-20, "Discharge Air Flow".

BLOWER FAN RESISTOR

Removal and Installation

INFOID:0000000001704318

REMOVAL

1. Remove the instrument lower finisher. Refer to IP-10.
2. Remove the console side cover. Refer to IP-10.
3. Remove the brake pedal assembly. Refer to BR-5.
4. Disconnect the blower fan resistor connector.
5. Remove the blower fan resistor screws (A), then remove the blower fan resistor (1).

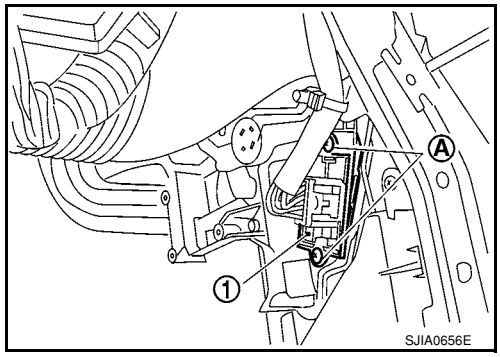

INSTALLATION

Installation is in the reverse order of removal.

HEATER CORE

Removal and Installation

INFOID:0000000001704319

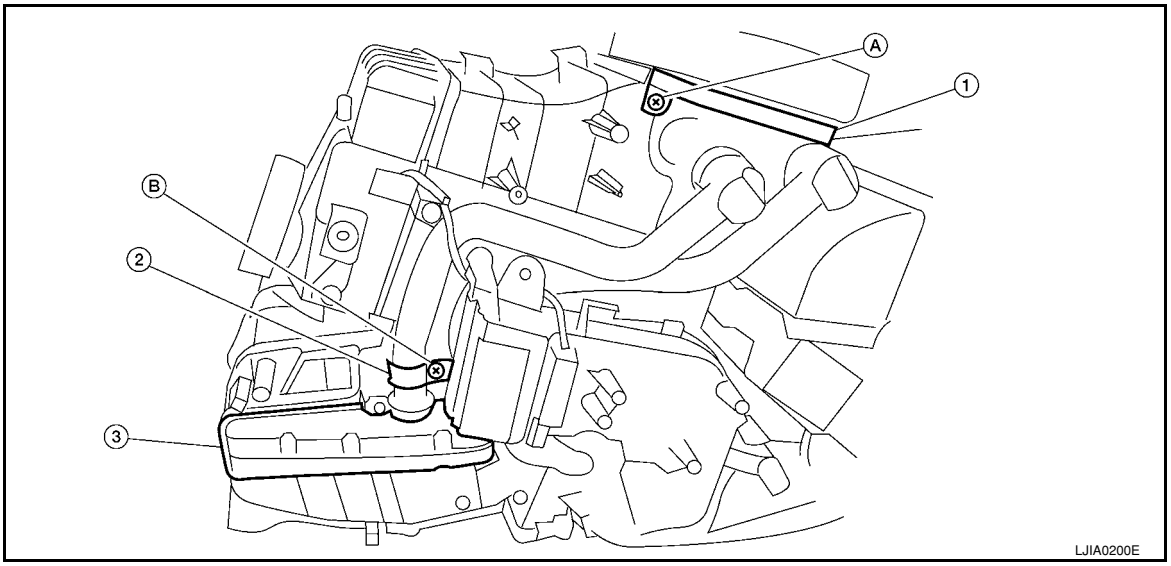

1. Heater pipe cover	2. Heater pipe clip	3. Heater core
A. Heater pipe cover screw	B. Heater pipe clip screw	

REMOVAL

1. Remove the A/C unit assembly. Refer to MTC-58.
2. Remove the foot duct (left). Refer to MTC-69, "Removal and Installation".
3. Remove the heater pipe cover screw, then remove the heater pipe cover.
4. Remove the heater pipe clip screw, then remove the heater pipe clip.
5. Slide the heater core out of the A/C unit assembly.

INSTALLATION

Installation is in the reverse order of removal.

AIR CONDITIONER FILTER

Removal and Installation

INFOID:0000000001704320

FUNCTION

The fresh air (A) and the recirculated air (B) drawn inside the passenger compartment by the blower fan (1) is kept clean (C) on either mode by the air conditioner filter (2), located before the evaporator (3), in the A/C unit assembly.

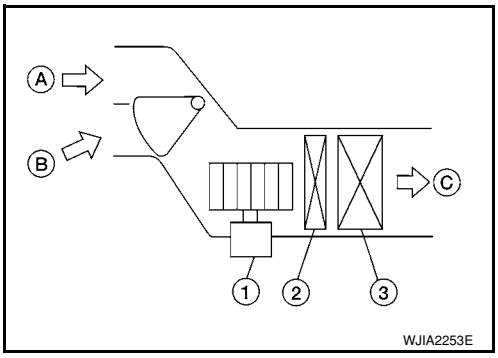

REPLACEMENT TIMING

Replace the air conditioner filter according to the maintenance schedules. Refer to MA-6.

NOTE:

The air conditioner filter caution label is located inside the glove box door.

REPLACEMENT PROCEDURES

1. Remove the glove box assembly. Refer to IP-10.
2. Compress the air conditioner filter (1) downward while sliding it to the RH side of the vehicle to release the upper pawl.
3. Move the bottom of air conditioner filter (1) upward as shown to release the bottom tab, then remove it.

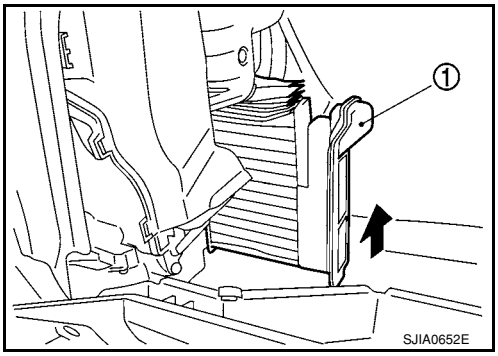

4. Replace the air conditioner filter with new one and install the new filter in the A/C unit assembly.
   CAUTION:
   Make sure that the air conditioner filter lower tab is fully seated, and that the air conditioner upper pawl is locked into place securing the new filter into the A/C unit assembly.
5. Install the glove box assembly. Refer to IP-10.

DUCTS AND GRILLES

Removal and Installation

INFOID:0000000001704321

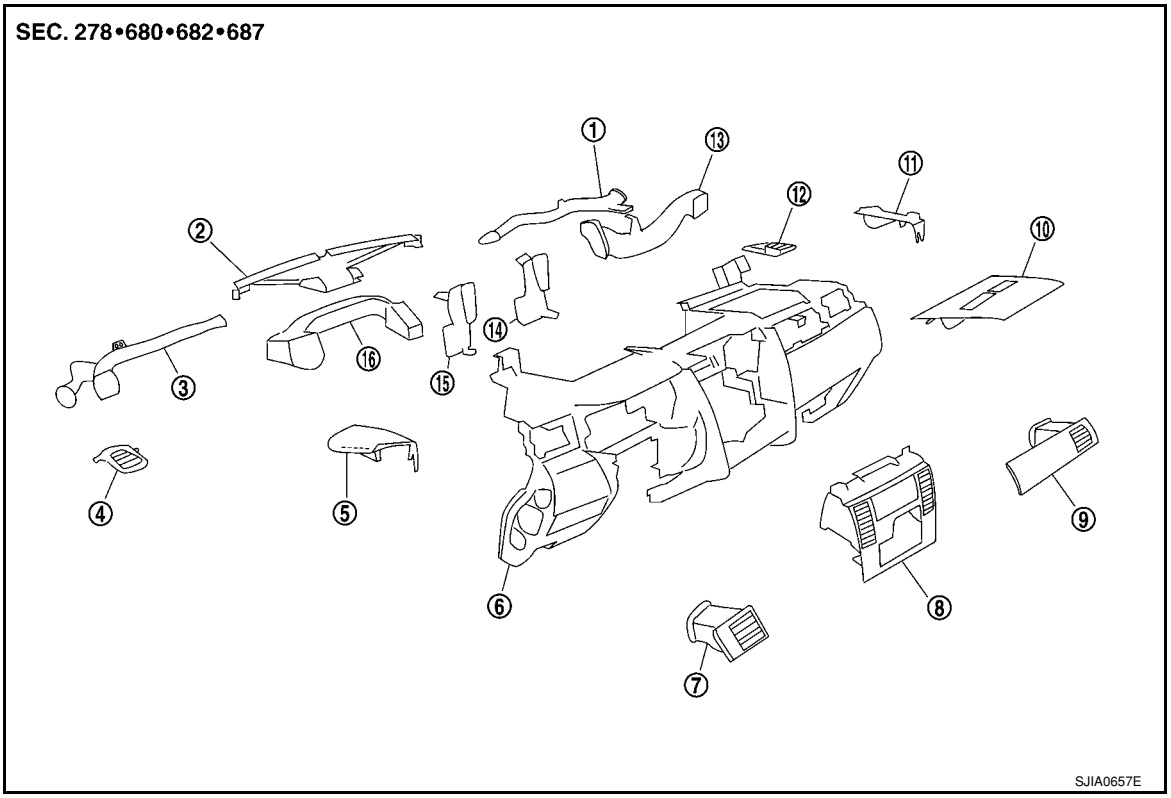

1. Side defroster duct (right)
2. Defroster nozzle
3. Side defroster duct (left)
4. Side defroster grille (left)
5. Instrument side panel (left)
6. Instrument panel and pad
7. Side ventilator assembly (left)
8. Cluster lid C
9. Side ventilator assembly (right)
10. Instrument finisher E
11. Instrument side panel (right)
12. Side defroster grille (right)
13. Side ventilator duct (right)
14. Center ventilator duct (right)
15. Center ventilator duct (left)
16. Side ventilator duct (left)

Floor Ducts - Canada Only

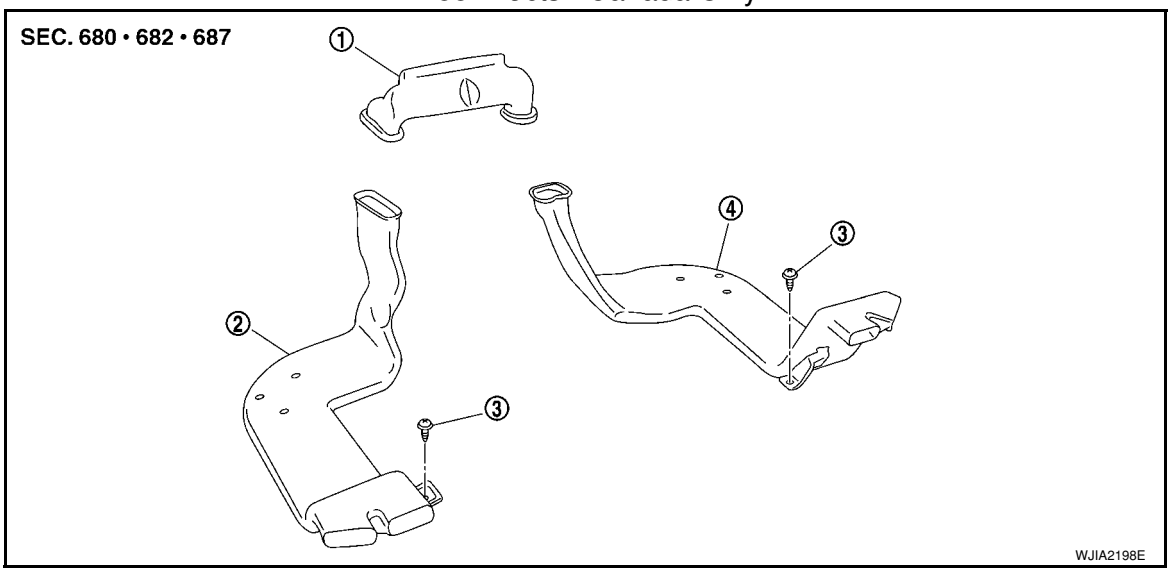

1. Front floor duct
2. Rear floor duct (left)
3. Clip
4. Rear floor duct (right)

CENTER VENTILATOR GRILLES

Removal

1. Remove cluster lid C. Refer to IP-10.
2. Remove center ventilator grills (1) from cluster lid C using suitable tool (A).

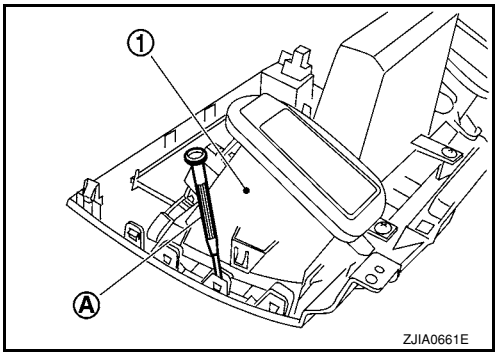

Installation
Installation is in the reverse order of removal.

SIDE VENTILATOR GRILLES (LH/RH)

Removal

1. Remove side ventilator assembly (LH). Refer to IP-10.
2. Remove side ventilator grille (LH) (1) using suitable tool (A).

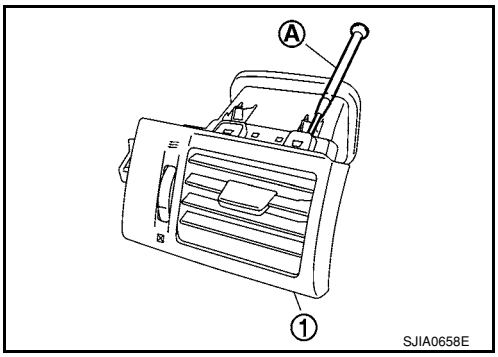

3. Remove side ventilator assembly (RH). Refer to IP-10.
4. Remove side ventilator grille (RH) (1) using suitable tool (A).

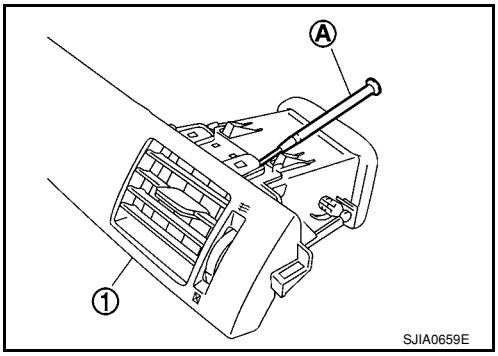

Installation
Installation is in the reverse order of removal.

DEFROSTER NOZZLE AND SIDE DEFROSTER DUCTS (LH/RH)

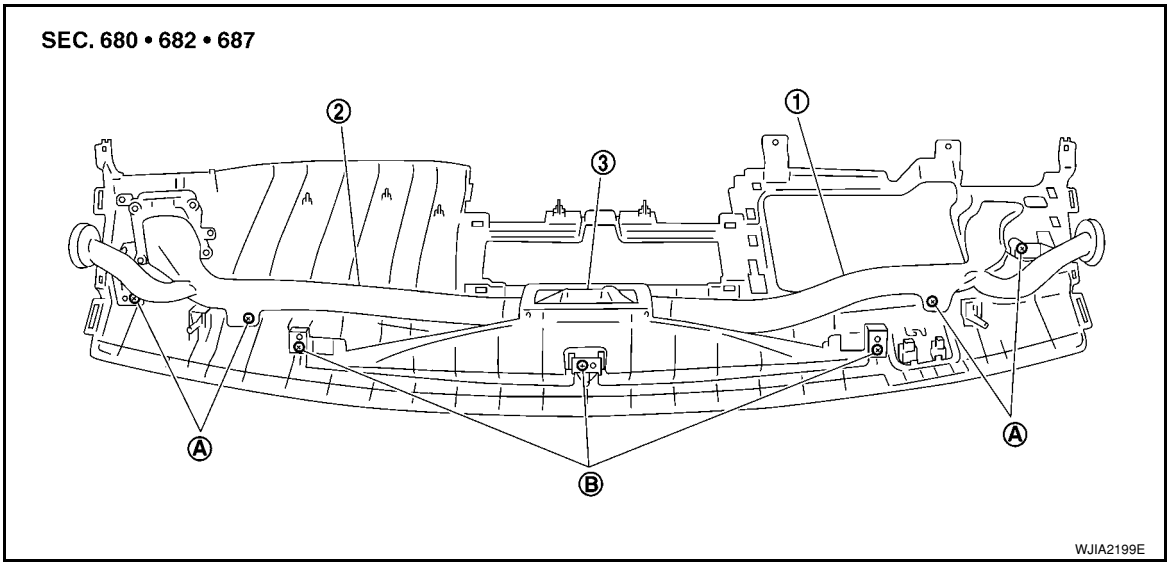

1. Side defroster duct (RH)
2. Side defroster duct (LH)
3. Defroster nozzle

A. Side defroster duct screw
B. Defroster nozzle screw

Removal

1. Remove instrument upper finisher. Refer to IP-10.
2. Remove screws and then remove side defroster duct (RH) and side defroster duct (LH).
3. Remove screws, and then remove defroster nozzle.

Installation

Installation is in the reverse order of removal.

SIDE VENTILATOR DUCTS

Removal

1. Remove instrument panel and pad. Refer to IP-10.
2. Remove screws (A), and then remove side ventilator duct (left) (1).

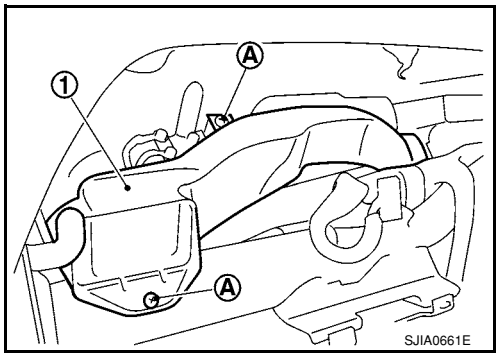

3. Remove screw (A) and clip (B), and then remove side ventilator duct (right) (1).

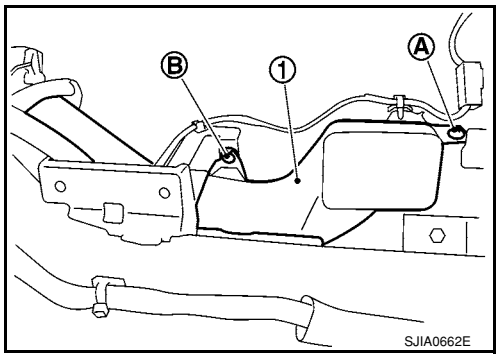

Installation

Installation is in the reverse order of removal.

CENTER VENTILATOR DUCTS

Removal

1. Remove instrument panel & pad. Refer to IP-10.
2. Remove screws (A), and then remove center ventilator ducts (1).

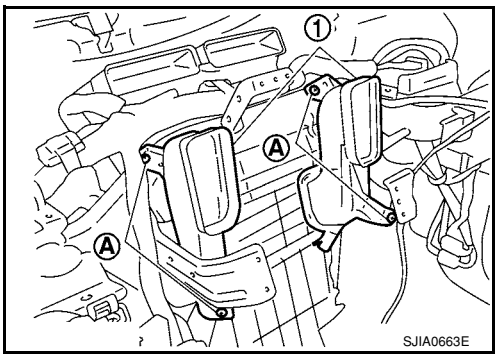

Installation
Installation is in the reverse order of removal.

SIDE FOOT DUCTS

NOTE:
The side foot ducts are part of the A/C unit assembly case.

Removal

1. Remove A/C unit assembly. Refer to MTC-58.
2. Remove screws (A), and then remove side foot duct (LH) (1).

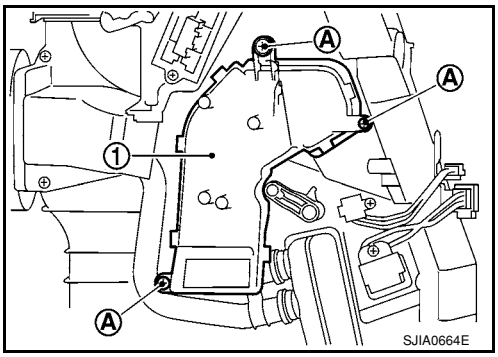

3. Remove screws (A), and then remove side foot duct (RH) (1).

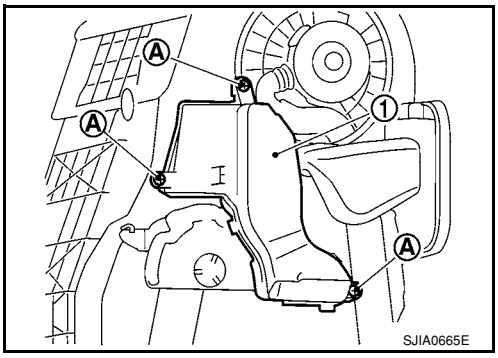

Installation
Installation is in the reverse order of removal.

FLOOR DUCTS

Removal

1. Remove front seats and center console assembly. Refer to SE-10 and IP-10.

2. Disengage claws (A), and then remove front floor duct (1).

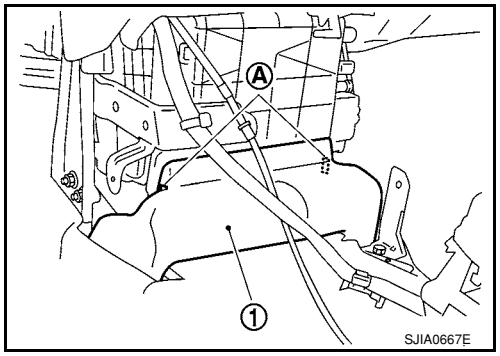

3. Peel back floor trim to a point where floor duct is visible.
4. Remove clips (A), and then remove rear floor duct (left) (1) and rear floor duct (right) (2).

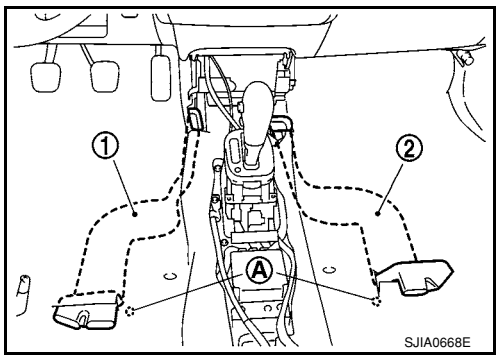

Installation

Installation is in the reverse order of removal.

REFRIGERANT LINES

HFC-134a (R-134a) Service Procedure

INFOID:0000000001704322

SETTING OF SERVICE TOOLS AND EQUIPMENT

Discharging Refrigerant

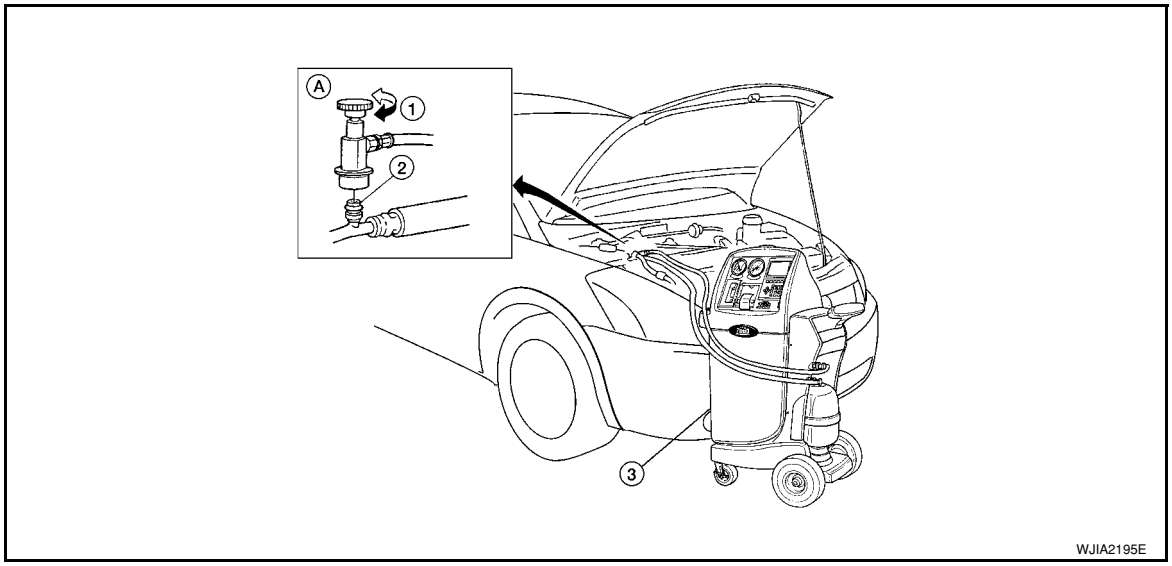

1. Shut-off valve
2. A/C service valve
3. Recovery/recycling equipment

A. Preferred (best) method

WARNING:

Avoid breathing A/C refrigerant and oil vapor or mist. Exposure may irritate eyes, nose and throat. Remove HFC-134a (R-134a) refrigerant from the A/C system using certified service equipment meeting requirements of SAE J2210 HFC-134a (R-134a) recycling equipment or SAE J2201 HFC-134a (R-134a) recovery equipment. If an accidental system discharge occurs, ventilate the work area before resuming service. Additional health and safety information may be obtained from the refrigerant and oil manufacturers.

Evacuating System and Charging Refrigerant

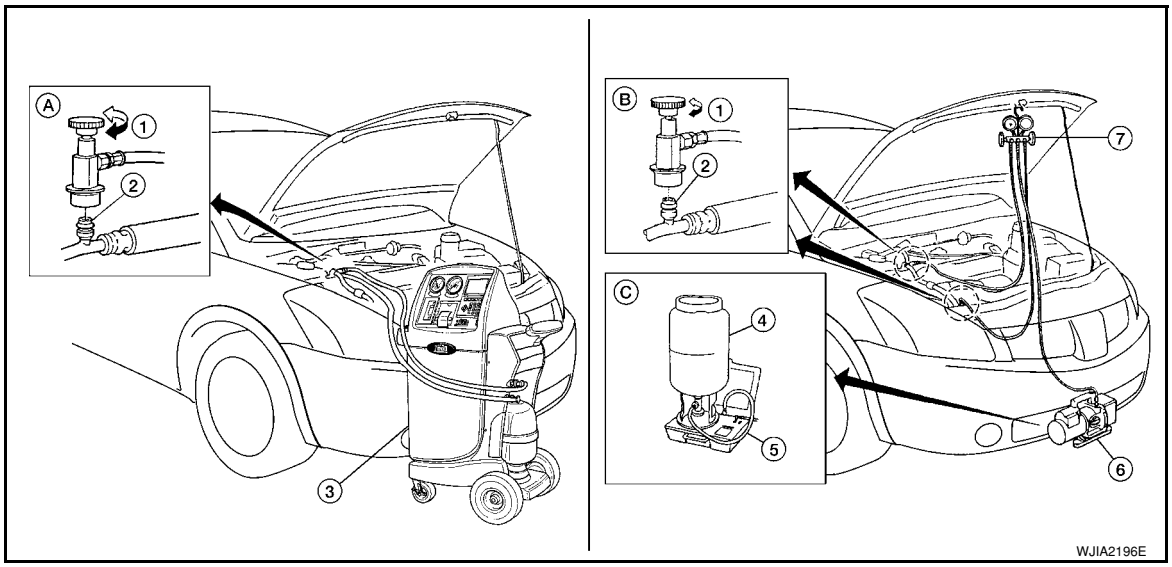

1. Shut-off valve
2. A/C service valve
3. Recovery/recycling equipment
4. Refrigerant container (HFC-134a)
5. Weight scale (J-39650)
6. Evacuating vacuum pump (J-39699)

7. Manifold gauge set (J-39183) A. Preferred (best) method B. Alternative method
C. For charging

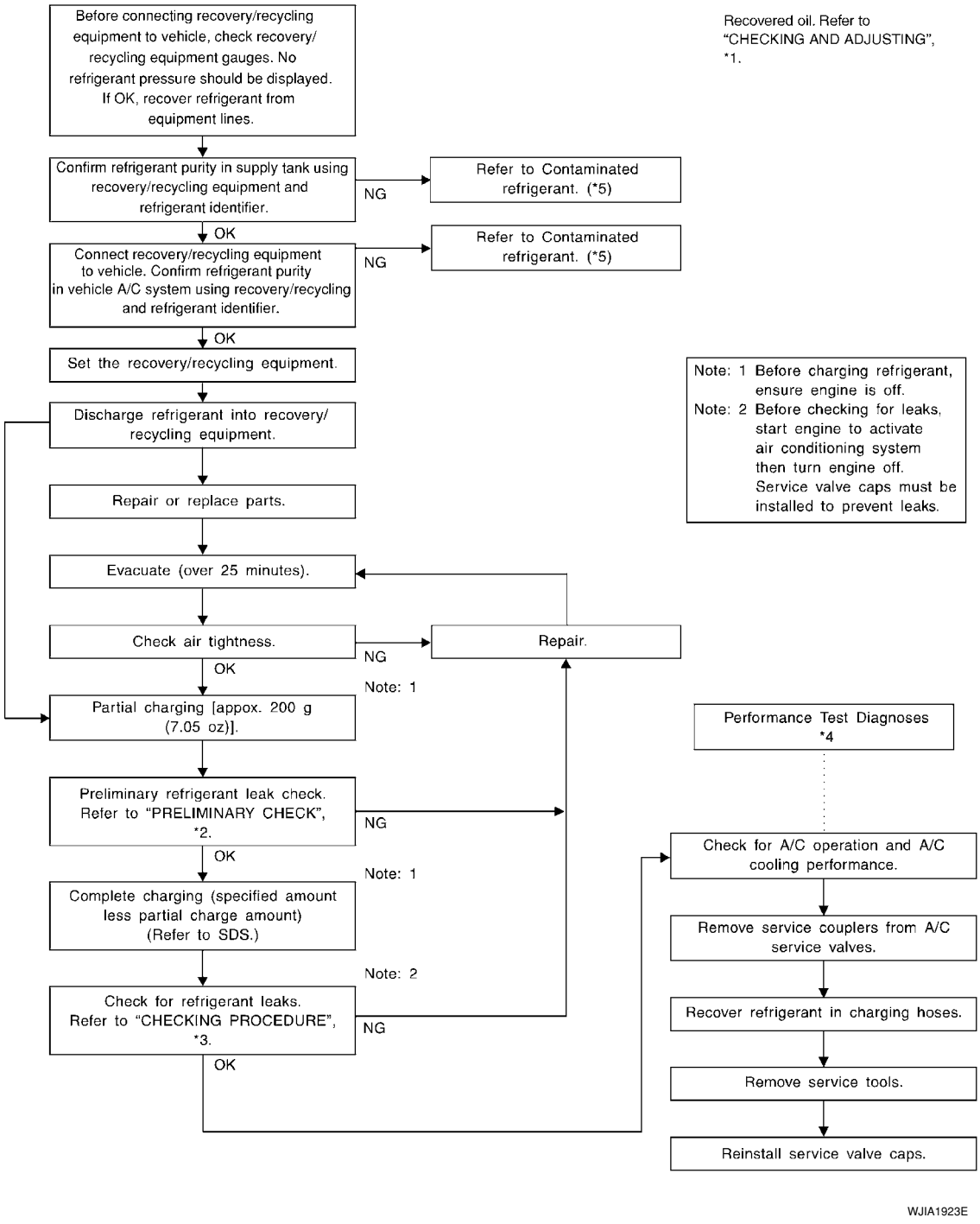

*1 MTC-16, "Maintenance of Oil Quantity in Compressor" *2 MTC-84, "Checking of Refrigerant Leaks" *3 MTC-85, "Electronic Refrigerant Leak Detector"
*4 MTC-45, "Insufficient Cooling"

Component

INFOID:0000000001704323

Type 1 A/C System

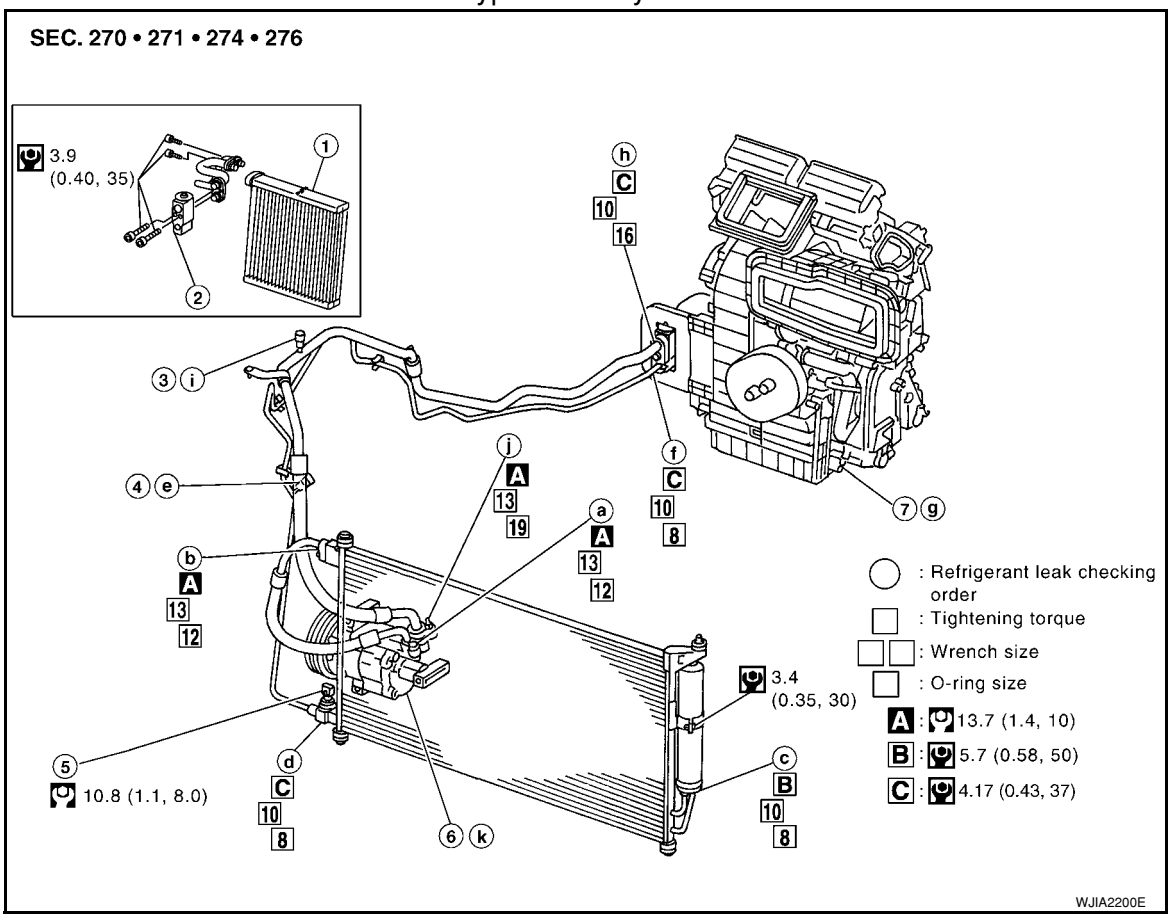

1. Evaporator
2. Expansion valve
3. Low-pressure service valve
4. High-pressure service valve
5. Refrigerant pressure sensor
6. Shaft seal
7. Drain hose

Type 2 A/C System

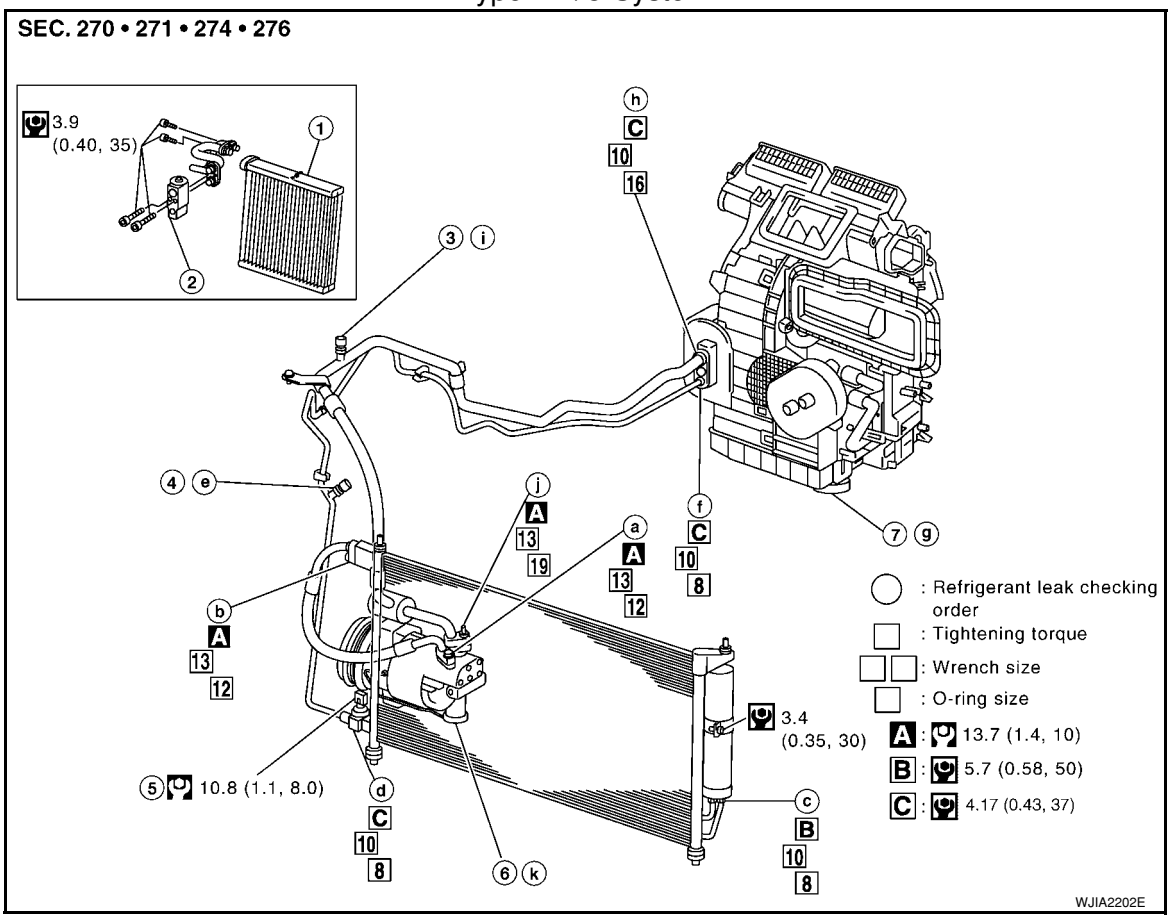

1. Evaporator
2. Expansion valve
3. Low-pressure service valve
4. High-pressure service valve
5. Refrigerant pressure sensor
6. Shaft seal
7. Drain hose

Idler Pulley - Without A/C

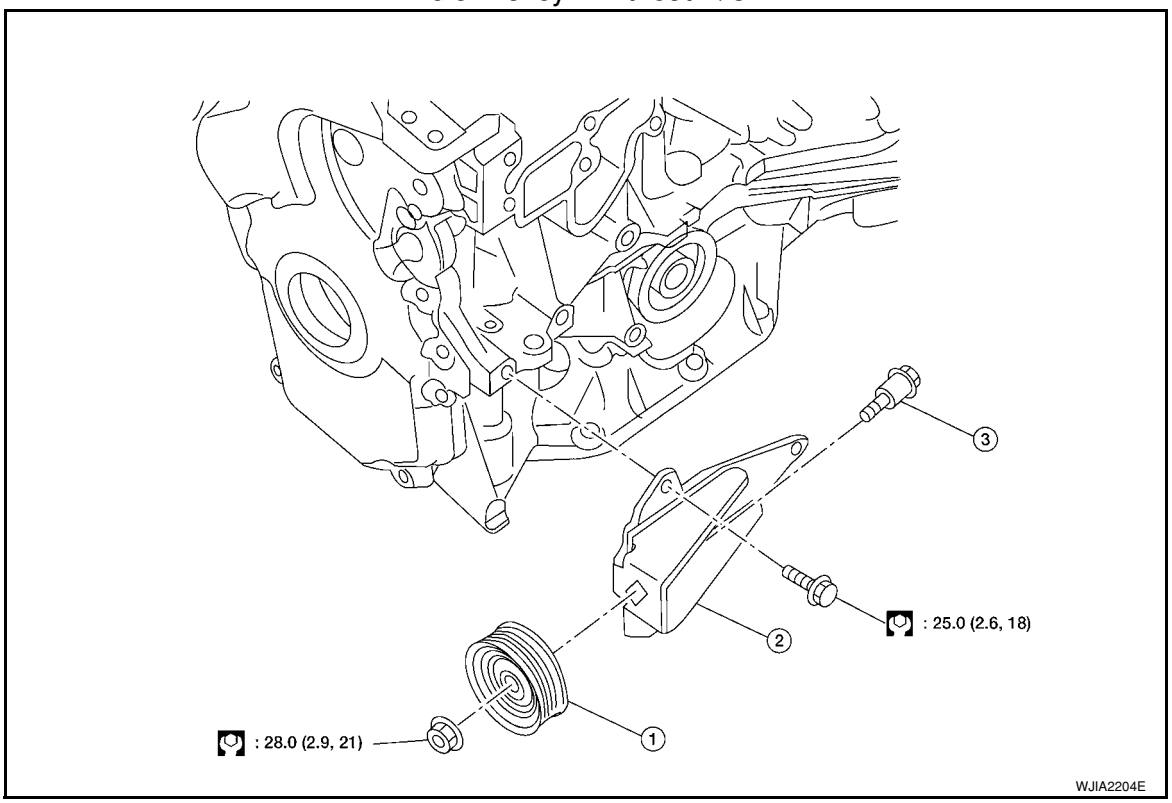

1. Idler pulley
2. Bracket
3. Shaft

Refer to MTC-4, "Precaution for Refrigerant Connection".

Removal and Installation of Compressor

INFOID:0000000001704324

REMOVAL

1. Use the recovery/recycling equipment to evacuate the refrigerant.
2. Remove the two engine undercovers, using power tools.
3. Remove low-pressure flexible hose nut (A) and high-pressure flexible hose bolt (B) from compressor.
   CAUTION:
   Cap or wrap the joint of the pipe with suitable material such as vinyl tape to avoid the entry of air.
   NOTE:
   Type 1 shown, type 2 is similar.
4. Remove A/C compressor belt. Refer to EM-13.
5. Disconnect compressor connector (C).

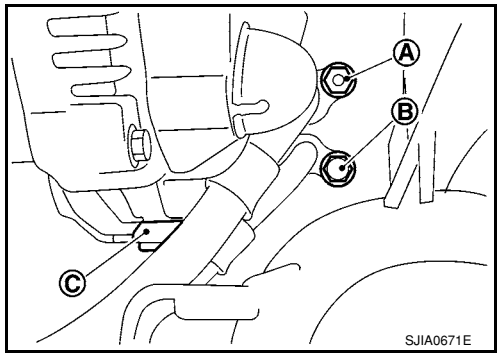

6. Remove bolts (A) from compressor (1), using power tools.
7. Remove compressor (1) downward from the engine compartment.

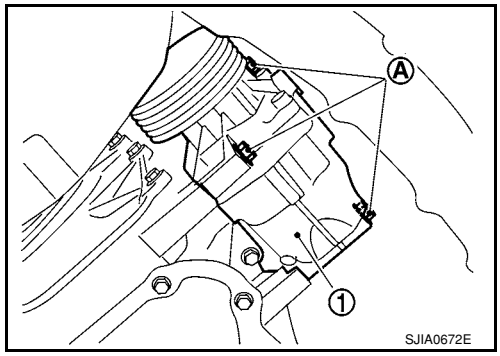

INSPECTION FOR CLUTCH DISC TO PULLEY CLEARANCE

1. Check the clearance around the entire periphery of the clutch disc.

Clutch disc to pulley clearance : 0.3 - 0.6 mm (0.012 - 0.024 in)

- Measure the clearance for the type 1 compressor as shown.

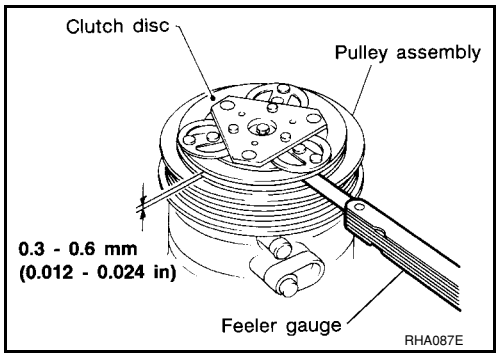

- Measure the clearance for the type 2 compressor as shown.

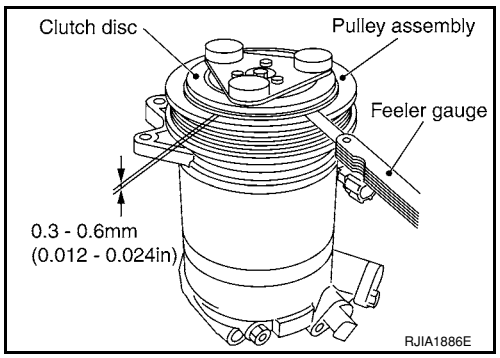

2. If specified clearance is not obtained, replace compressor.

INSTALLATION

Installation is in the reverse order of removal.

CAUTION:

- **Replace O-rings of low-pressure flexible hose and high-pressure flexible hose with a new ones, and apply compressor oil when installing.**
- **When recharging refrigerant, check for leaks.**

Compressor bolts : 25 N·m (2.6 kg-m, 18 ft-lb)

Removal and Installation of Low-Pressure Flexible Hose

INFOID:0000000001704325

REMOVAL

1. Use the recovery/recycling equipment to evacuate the refrigerant.
2. Remove engine cover. Refer to EM-18.
3. Remove cowl top cover. Refer to EI-21.
4. Remove lower dash insulator.
5. Remove ground wire harness (1).
6. Remove bolt (A) and nut (B) from low-pressure flexible hose (2) bracket.

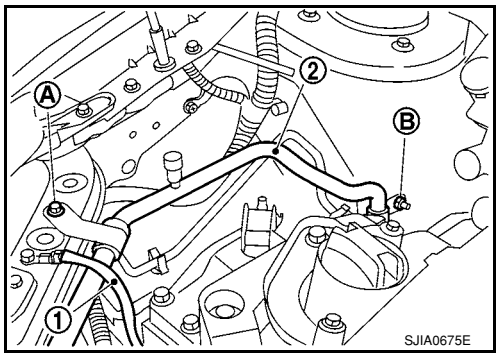

7. Remove bolt (A), and then disconnect low-pressure flexible hose (1) and high-pressure pipe (2).
   CAUTION:
   Cap or wrap the joint of the pipe with suitable material such as vinyl tape to avoid the entry of air.

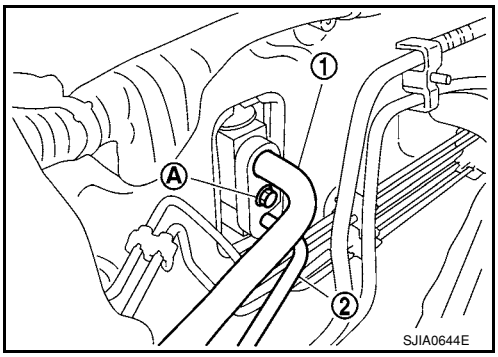

8. Remove nut (A), and then remove low-pressure flexible hose (1) from compressor (2).
   CAUTION:
   Cap or wrap the joint of the pipe with suitable material such as vinyl tape to avoid the entry of air.

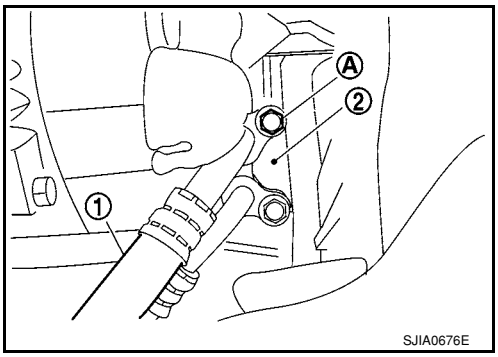

INSTALLATION

Installation is in the reverse order of removal.

CAUTION:

- **Replace O-rings for A/C piping with new ones, and apply compressor oil when installing.**
- **When recharging refrigerant, check for leaks.**

Removal and Installation of High-pressure Flexible Hose

INFOID:0000000001704326

REMOVAL

1. Use the recovery/recycling equipment to evacuate the refrigerant.
2. Remove high-pressure flexible hose (1) bolt (A) from condenser (2).

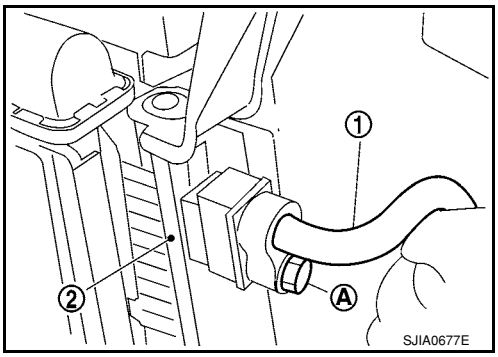

3. Remove bolt (A), and then remove high-pressure flexible hose (1) from compressor (2).
   CAUTION:
   Cap or wrap the joint of the pipe with suitable material such as vinyl tape to avoid the entry of air.

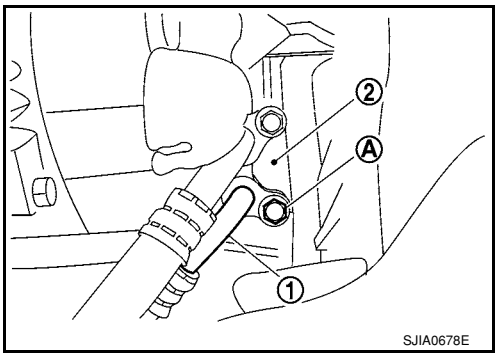

INSTALLATION

Installation is in the reverse order of removal.

CAUTION:

- **Replace O-rings of high-pressure flexible hose with a new ones, and apply compressor oil when installing.**
- **When recharging refrigerant, check for leaks.**

Removal and Installation of High-pressure Pipe

INFOID:0000000001704327

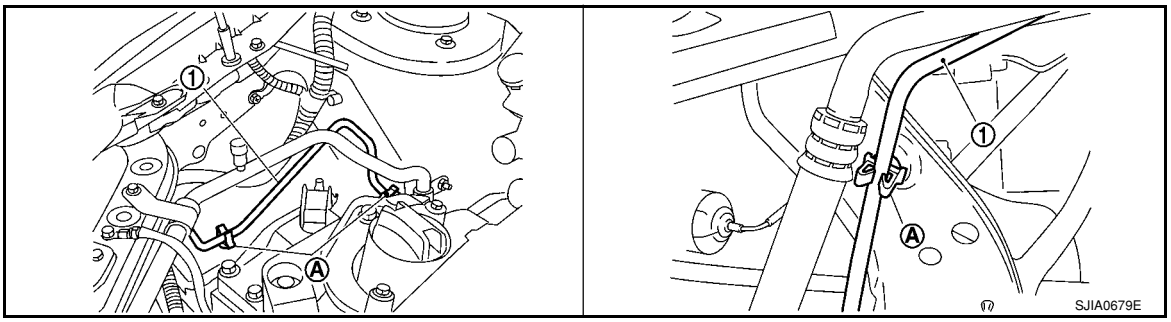

1. High-pressure pipe
A. High-pressure pipe clips

REMOVAL

1. Remove low-pressure flexible hose. Refer to MTC-79, "Removal and Installation of Low-Pressure Flexible Hose".
2. Remove high-pressure pipe from the clips.
3. Remove high-pressure pipe bolt (A), and then remove high-pressure pipe (1) from condenser (2).
   CAUTION:
   Cap or wrap the joint of the pipe with suitable material such as vinyl tape to avoid the entry of air.

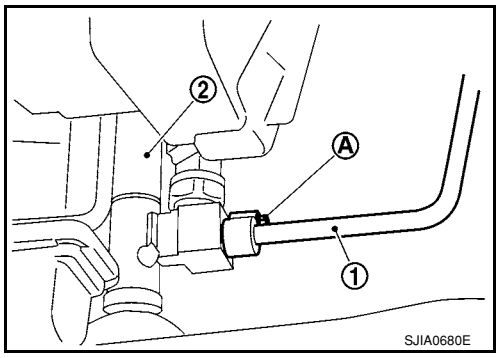

INSTALLATION

Installation is in the reverse order of removal.

CAUTION:

- **Replace O-rings of high-pressure pipe with a new ones, and apply compressor oil when installing.**
- **When recharging refrigerant, check for leaks.**

Removal and Installation of Refrigerant Pressure Sensor

INFOID:0000000001704328

REMOVAL

1. Use the recovery/recycling equipment to evacuate the refrigerant.
2. Disconnect connector, and then remove refrigerant pressure sensor (1) from condenser (2).
   CAUTION:
   When working, be careful not to damage the condenser fins.

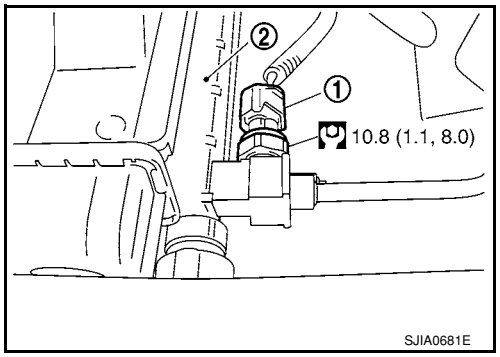

INSTALLATION

Installation is in the reverse order of removal.

CAUTION:

- **Replace O-rings of refrigerant pressure sensor with a new one, and apply compressor oil when installing.**
- **When recharging refrigerant, check for leaks.**

Removal and Installation of Condenser

INFOID:0000000001704329

REMOVAL

1. Remove the three upper headlamp bolts to reposition the headlamps out of the way
2. Remove the radiator core support upper. Refer to BL-19 .
3. Remove high-pressure flexible hose and high-pressure pipe from condenser. Refer to MTC-80, "Removal and Installation of High-pressure Flexible Hose" and MTC-81, "Removal and Installation of High-pressure Pipe" .
   CAUTION:
   Cap or wrap the joint of the pipe with suitable material such as vinyl tape to avoid the entry of air.
4. Disconnect refrigerant pressure sensor connector.
5. Tilt radiator toward rear of vehicle, and then remove condenser (1) from between radiator and radiator core support upper.
   CAUTION:
   Be careful not to damage the core surface of condenser and radiator.

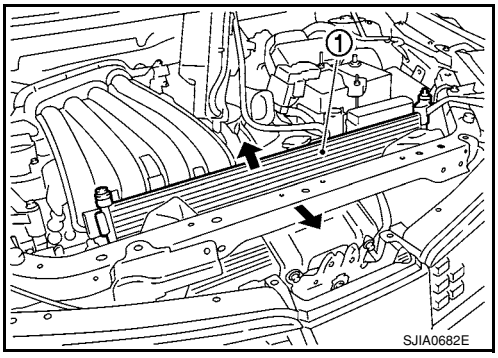

INSTALLATION

Installation is in the reverse order of removal.

CAUTION:

- **Replace O-rings for A/C piping with new ones, and apply compressor oil when installing.**
- **When recharging refrigerant, check for leaks.**

Removal and Installation of Liquid Tank

INFOID:0000000001704330

REMOVAL

1. Remove the condenser. Refer to MTC-82, "Removal and Installation of Condenser" .
2. Clean liquid tank and its surrounding area, and remove dirt and rust from liquid tank.
   CAUTION:
   Be sure to clean carefully.
3. Remove bolts (A) and (B) from liquid tank.

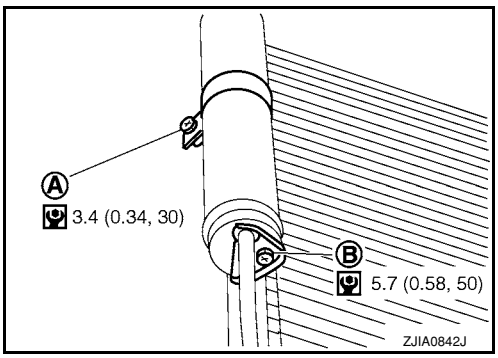

4. Remove liquid tank bracket (1) from protruding part of condenser (2).
5. Slide liquid tank (3) upward, and then remove liquid tank (3).

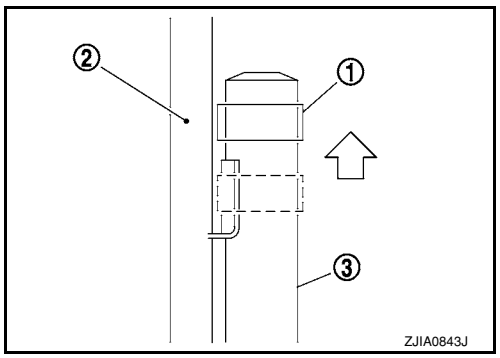

INSTALLATION

Installation is in the reverse order of removal.

CAUTION:

- **Make sure liquid tank bracket (2) is securely installed at protrusion of condenser (3). [Make sure liquid tank bracket (2) does not move to a position below center of liquid tank (1).]**
- **Replace O-rings for A/C piping with new ones, and apply compressor oil when installing.**
- **When recharging refrigerant, check for leaks. Refer to MTC-84, "Checking of Refrigerant Leaks" .**

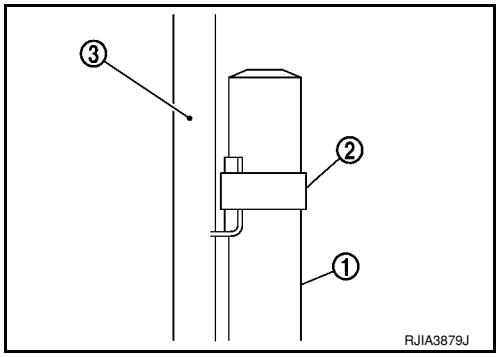

Removal and Installation of Evaporator

INFOID:0000000001704331

REMOVAL

1. Remove A/C unit assembly. Refer to MTC-58 .
   CAUTION:
   Cap or wrap the joint of the pipe with suitable material such as vinyl tape to avoid the entry of air.
2. Remove air conditioner filter. Refer to MTC-68 .
3. Remove foot duct (right). Refer to MTC-69, "Removal and Installation" .
4. Remove screws (A), and then remove expansion valve cover (1).

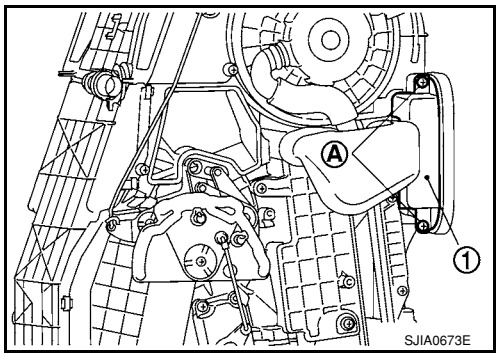

5. Remove screws (A), and then remove evaporator cover (1).

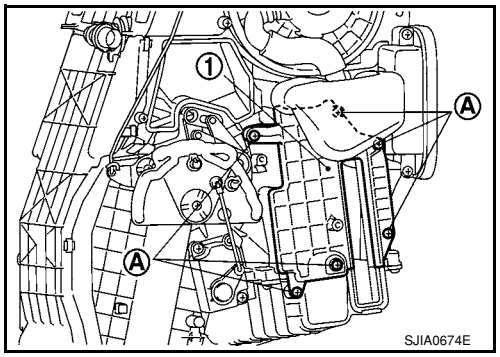

6. Remove evaporator (1) with lower blower case (2) from A/C unit assembly.
7. Remove thermo control amp. (3) from evaporator (1), if equipped (TYPE 1 systems).
8. Remove evaporator (1) from lower blower case (2).

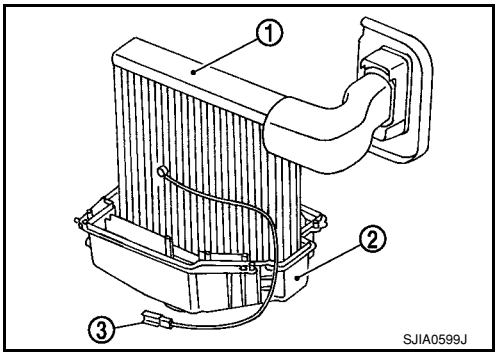

INSTALLATION

Installation is in the reverse order of removal.

CAUTION:

- **Replace O-rings for A/C piping with new ones, and apply compressor oil when installing.**
- **Mark the position of the thermo control amp., if equipped (TYPE 1 systems).**
- **When recharging refrigerant, check for leaks.**

Removal and Installation of Expansion Valve

INFOID:0000000001704332

REMOVAL

1. Use the recovery/recycling equipment to evacuate the refrigerant.
2. Remove cowl top cover. Refer to EI-21.
3. Remove lower dash insulator.
4. Disconnect low-pressure flexible hose and high-pressure pipe from evaporator. Refer to MTC-58.
5. Remove expansion valve bolts (A), and then remove expansion valve (1).

   CAUTION:

   Cap or wrap the joint of the pipe with suitable material such as vinyl tape to avoid the entry of air.

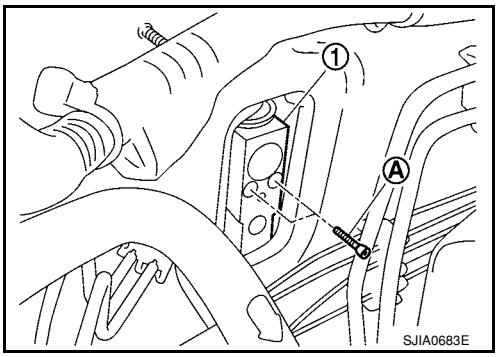

INSTALLATION

Installation is in the reverse order of removal.

CAUTION:

- **Replace O-rings of evaporator with new ones, and apply compressor oil when installing.**
- **When recharging refrigerant, check for leaks.**

Checking of Refrigerant Leaks

INFOID:0000000001704333

Perform a visual inspection of all refrigeration parts, fittings, hoses and components for signs of A/C oil leakage, damage and corrosion. A/C oil leakage may indicate an area of refrigerant leakage. Allow extra inspection time in these areas when using either an electronic refrigerant leak detector or fluorescent dye leak detector.

If dye is observed, confirm the leak with an electronic refrigerant leak detector. It is possible a prior leak was repaired and not properly cleaned.

When searching for leaks, do not stop when one leak is found but continue to check for additional leaks at all system components and connections.

When searching for refrigerant leaks using an electronic leak detector, move the probe along the suspected leak area at 25 to 50 mm (1 to 2 in) per second and no further than 1/4 inch from the component.

CAUTION:

Moving the electronic leak detector probe slower and closer to the suspected leak area will improve the chances of finding a leak.

Checking System for Leaks Using the Fluorescent Leak Detector

INFOID:0000000001704334

1. Check A/C system for leaks using the UV lamp and safety goggles J-42220 in a low sunlight area (area without windows preferable). Illuminate all components, fittings and lines. The dye will appear as a bright green/yellow area at the point of leakage. Fluorescent dye observed at the evaporator drain opening indicates an evaporator core assembly (tubes, core or expansion valve) leak.
2. If the suspected area is difficult to see, use an adjustable mirror or wipe the area with a clean shop rag or cloth, with the UV lamp for dye residue.
3. After the leak is repaired, remove any residual dye using dye cleaner J-43872 to prevent future misdiagnosis.
4. Perform a system performance check and verify the leak repair with an approved electronic refrigerant leak detector.

NOTE:
Other gases in the work area or substances on the A/C components, for example, anti-freeze, windshield washer fluid, solvents and oils, may falsely trigger the leak detector. Make sure the surfaces to be checked are clean.
Clean with a dry cloth or blow off with shop air.
Do not allow the sensor tip of the detector to contact with any substance. This can also cause false readings and may damage the detector.

Dye Injection

INFOID:0000000001704335

(This procedure is only necessary when recharging the system or when the compressor has seized and was replaced.)

1. Check A/C system static (at rest) pressure. Pressure must be at least 345 kPa (3.45 bar, 3.52 kg/cm^2, 50 psi).
2. Pour one bottle (1/4 ounce / 7.4 cc) of the A/C refrigerant dye into the injector tool J-41459.
3. Connect the injector tool to the A/C low-pressure side service fitting.
4. Start engine and switch A/C ON.
5. When the A/C operating (compressor running), inject one bottle (1/4 ounce / 7.4 cc) of fluorescent dye through the low-pressure service valve using dye injector tool J-41459 (refer to the manufacture's operating instructions).
6. With the engine still running, disconnect the injector tool from the service fitting.
   CAUTION:
   Be careful the A/C system or replacing a component, pour the dye directly into the open system connection and proceed with the service procedures.
7. Operate the A/C system for a minimum of 20 minutes to mix the dye with the system oil. Depending on the leak size, operating conditions and location of the leak, it may take from minutes to days for the dye to penetrate a leak and become visible.

Electronic Refrigerant Leak Detector

INFOID:0000000001704336

PRECAUTIONS FOR HANDLING LEAK DETECTOR

When performing a refrigerant leak check, use an A/C electrical leak detector (SST) or equivalent. Ensure that the instrument is calibrated and set properly per the operating instructions.
The leak detector is a delicate device. In order to use the leak detector properly, read the operating instructions and perform any specified maintenance.

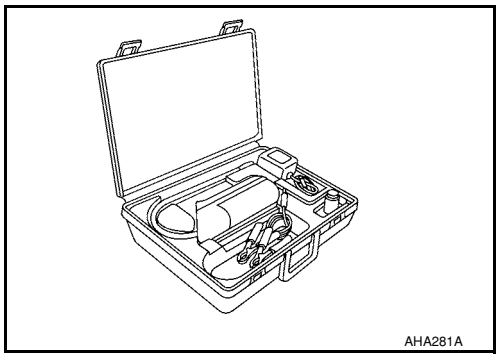

1. Position probe approximately 5 mm (3/16 in) away from point to be checked.

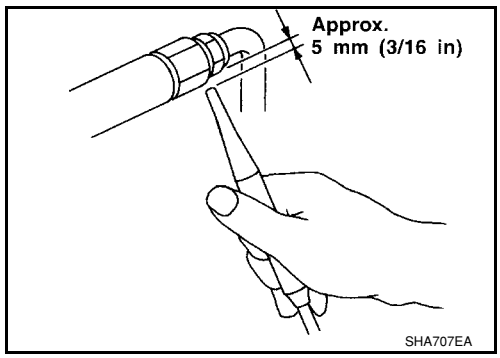

2. When testing, circle each fitting completely with probe.

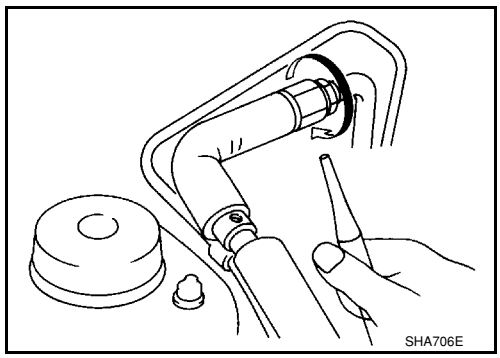

3. Move probe along component approximately 25 to 50 mm (1 to 2 in) per second.

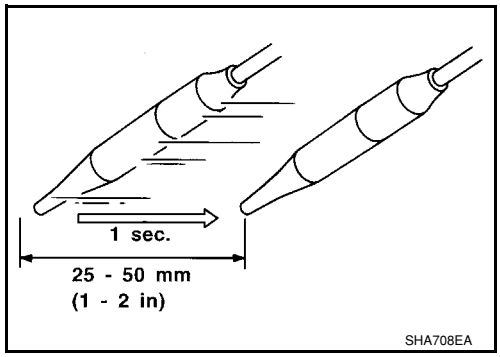

CHECKING PROCEDURE

To prevent inaccurate or false readings, make sure there is no refrigerant vapor, shop chemicals, or cigarette smoke in the vicinity of the vehicle. Perform the leak test in calm area (low air/wind movement) so that the leaking refrigerant is not dispersed.

1. Turn engine OFF.
2. Connect a suitable A/C manifold gauge set to the A/C service ports.
3. Check if the A/C refrigerant pressure is at least 345 kPa (3.45 bar, 3.52 kg/cm^2, 50 psi) above 16°C. If less than specification, recover/evacuate and recharge the system with the specified amount of refrigerant.
   NOTE:
   At temperatures below 16°C, leaks may not be detected since the system may not reach 345 kPa (3.45 bar, 3.52 kg/cm^2, 50 psi).
4. Perform the leak test from the high-pressure side (compressor discharge a to evaporator inlet f) to the low-pressure side (evaporator drain hose g to shaft seal k). Refer to MTC-76, "Component". Perform a leak check for the following areas carefully. Clean the component to be checked and move the leak detected probe completely around the connection/component.
   - Compressor
     Check the fitting of high- and low-pressure flexible hoses, relief valve and shaft seal.
   - Condenser
     Check the fitting of high-pressure flexible hose and pipe, refrigerant pressure sensor.
   - Liquid tank
     Check the refrigerant connection.
   - Service valves

Check all around the service valves. Ensure service valve caps are secured on the service valves (to prevent leaks).

NOTE:

After removing A/C manifold gauge set from service valves, wipe any residue from valves to prevent any false readings by leak detector.

- Cooling unit (Evaporator)

  With engine OFF, turn blower fan on “High” for at least 15 seconds to dissipate any refrigerant trace in the cooling unit. Wait a minimum of 10 minutes accumulation time (refer to the manufacturer’s recommended procedure for actual wait time) before inserting the leak detector probe into the drain hose. Keep the probe inserted for at least 10 seconds. Use caution not to contaminate the probe tip with water or dirt that may be in the drain hose.

5. If a leak detector detects a leak, verify at least once by blowing compressed air into area of suspected leak, then repeat check as outlined above.
6. Do not stop when one leak is found. Continue to check for additional leaks at all system components. If no leaks are found, perform steps 7-10.
7. Start engine.
8. Set the heater A/C control as follows;

a. A/C switch: ON

b. Mode control dial position: VENT (Ventilation)

c. Intake door lever position: Recirculation

d. Max. cold temperature

e. Fan speed: High

9. Run engine at 1,500 rpm for at least 2 minutes.
10. Turn engine off and perform leak check again following steps 4 through 6 above.

    Refrigerant leaks should be checked immediately after stopping the engine. Begin with the leak detector at the compressor. The pressure on the high-pressure side will gradually drop after refrigerant circulation stops and pressure on the low-pressure side will gradually rise, as shown in the graph. Some leaks are more easily detected when pressure is high.

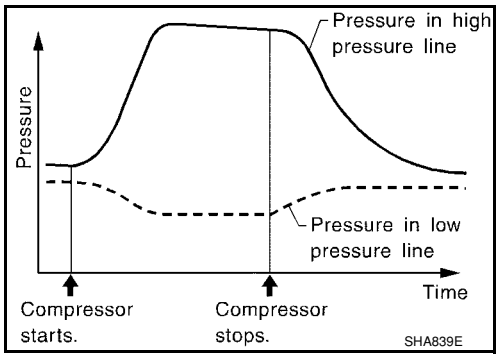

11. Before connecting recovery/recycling equipment to vehicle, check recovery/recycling equipment gauges. No refrigerant pressure should be displayed. If pressure is displayed, recover refrigerant from equipment lines.
12. Discharge A/C system using approved refrigerant recovery/recycling equipment. Repair the leaking fitting or component if necessary.
13. Evacuate and recharge A/C system and perform the leak test to confirm no refrigerant leaks.
14. Perform A/C performance test to ensure system works properly.

SERVICE DATA AND SPECIFICATIONS (SDS)

Compressor

INFOID:0000000001704337

Service information		TYPE 1	TYPE 2
Model		Calsonic Kansei make CR-10	Calsonic Kansei make CSV511
Type		Vane rotary	Variable displacement swash plate
Displacement cm^3 (in^3) / revolution	maximum	96 (5.86)	105 (6.41)
Cylinder bore × stroke mm (in)	maximum	—	34.8 (1.37) × 22.1 (0.87)
Direction of rotation		Clockwise (viewed from drive end)	
Drive belt		Poly-V Ribbed 6-Groove	

Oil

INFOID:0000000001704338

Service information		TYPE 1	TYPE 2
Compressor model		Calsonic Kansei make CR-10	Calsonic Kansei make CSV511
Type		NISSAN A/C System Oil Type R	NISSAN A/C System Oil Type S
Capacity m ℓ (US fl oz, Imp fl oz)	Total in system	120 (4.1, 4.2)	100 (3.4, 3.5)
	Compressor (service part) charging amount	Refer to MTC-16, "Maintenance of Oil Quantity in Compressor" .	Refer to MTC-16, "Maintenance of Oil Quantity in Compressor" .

Refrigerant

INFOID:0000000001704339

Type	HFC-134a (R-134a)
Capacity kg (lb)	0.45 ± 0.05 (0.99 ± 0.11)

Engine Idling Speed

INFOID:0000000001704340

Refer to EC-73, "Idle Speed and Ignition Timing Check" .

Belt Tension

INFOID:0000000001704341

Refer to EM-13 .

SECTION PB
PARKING BRAKE SYSTEM

CONTENTS

SERVICE INFORMATION 2

PRECAUTIONS 2
Precaution for Supplemental Restraint System (SRS) "AIR BAG" and "SEAT BELT PRE-TENSIONER" 2

PREPARATION 3
Commercial Service Tool 3

PARKING BRAKE CONTROL 4
On-Vehicle Service 4
Component 5
Removal and Installation 5

SERVICE DATA AND SPECIFICATIONS (SDS) 7
Parking Brake Control 7

SERVICE INFORMATION

PRECAUTIONS

Precaution for Supplemental Restraint System (SRS) "AIR BAG" and "SEAT BELT PRE-TENSIONER"

INFOID:0000000001703812

The Supplemental Restraint System such as “AIR BAG” and “SEAT BELT PRE-TENSIONER”, used along with a front seat belt, helps to reduce the risk or severity of injury to the driver and front passenger for certain types of collision. This system includes seat belt switch inputs and dual stage front air bag modules. The SRS system uses the seat belt switches to determine the front air bag deployment, and may only deploy one front air bag, depending on the severity of a collision and whether the front occupants are belted or unbelted.
Information necessary to service the system safely is included in the SRS and SB section of this Service Manual.

WARNING:

- **To avoid rendering the SRS inoperative, which could increase the risk of personal injury or death in the event of a collision which would result in air bag inflation, all maintenance must be performed by an authorized NISSAN/INFINITI dealer.**
- **Improper maintenance, including incorrect removal and installation of the SRS, can lead to personal injury caused by unintentional activation of the system. For removal of Spiral Cable and Air Bag Module, see the SRS section.**
- **Do not use electrical test equipment on any circuit related to the SRS unless instructed to in this Service Manual. SRS wiring harnesses can be identified by yellow and/or orange harnesses or harness connectors.**

PREPARATION

Commercial Service Tool

INFOID:0000000001703813

Tool name	Description
Power tool 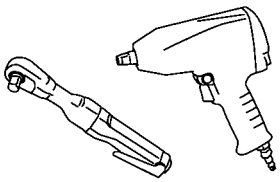 PBIC0190E 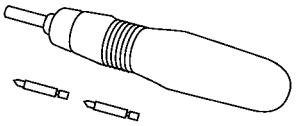 PBIC0191E	Removing nuts, bolts and screws

PARKING BRAKE CONTROL

On-Vehicle Service

INFOID:0000000001703814

INSPECTION

When parking brake lever is operated with a force of 196 N (20 kg-f, 44 lb-f), make sure parking brake lever stroke is within the specified number of notches. (Check it by listening and counting ratchet clicks.)

Number of notches : 8 - 9

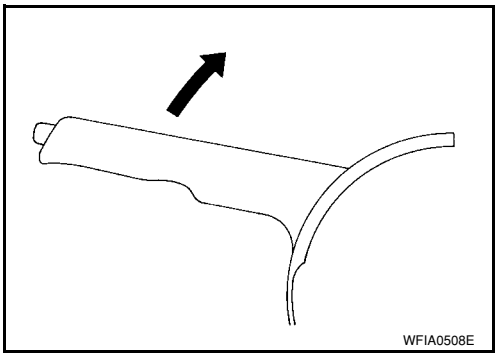

COMPONENTS INSPECTION

- Make sure that the mounting conditions (looseness, backlash, etc.) of each component are normal.
- Check the following:
- Device assembly for bends, damage and cracks. Replace if any damage is noted.
- Cables and equalizer for wear and damage. Replace if any damage is noted.
- Parking brake switch. Replace if it does not work correctly.

ADJUSTMENT

1. Remove console mask cover. Refer to IP-11, "Removal and Installation".
2. Engage parking brake lever, then lift up the end of the trim on the lever to access the adjusting nut.
3. Insert a deep socket wrench onto adjusting nut. Rotate adjusting nut to fully loosen cable, and then release parking brake lever.

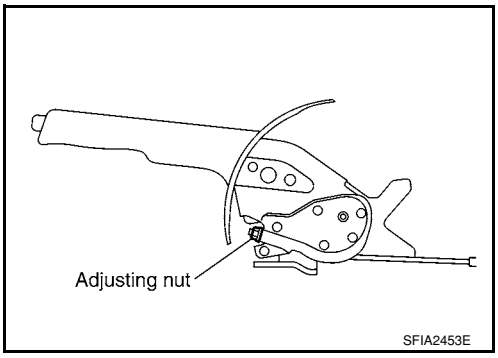

4. Depress the foot brake about 10 times and adjust the rear shoe clearance.
   CAUTION:
   Be sure to securely depress the foot brake.
5. Rotate brake drum to make sure that there is no drag.
6. Adjust parking brake cable with the following procedure.

a. When replace parking brake cable, operate parking brake lever with a force of 490 N (50 kg-f, 110 lb-f) about 10 times.
b. Engage parking brake lever, then lift up the end of the trim on the lever to access the adjusting nut.
c. Rotate adjusting nut to adjust parking brake lever stroke using a deep socket wrench.
d. Operate parking brake lever with a force of 196 N (20 kg-f, 44 lb-f), make sure the parking brake lever stroke is within the specified number of notches. (Check it by listening and counting ratchet clicks.)
e. Make sure that there is no drag on rear brake with parking brake lever completely released.

7. Install console mask. Refer to IP-11, "Removal and Installation".

Component

INFOID:0000000001703815

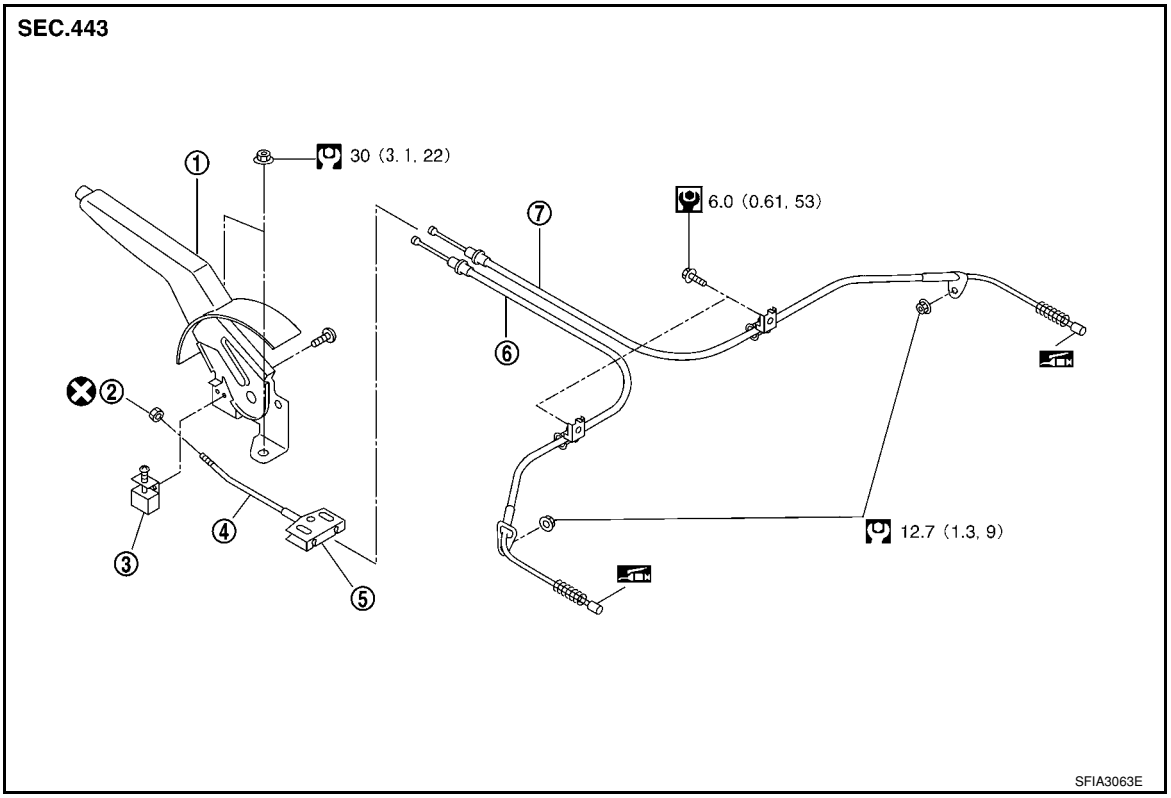

1. Device assembly
2. Adjusting nut
3. Parking brake switch
4. Front cable
5. Equalizer
6. LH rear cable
7. RH rear cable

: Multi-purpose grease

Refer to GI section GI-8, "Component" for symbol marks except as shown above.

Removal and Installation

INFOID:0000000001703816

REMOVAL

1. Remove center console assembly. Refer to IP-11, "Removal and Installation".
2. Disconnect parking brake switch connector.
3. Loosen adjusting nut.
4. Remove equalizer from rear cable terminal ends.
5. Take off rear cable clip, and unplug rear cable outward. (Close opening to take off clip.)

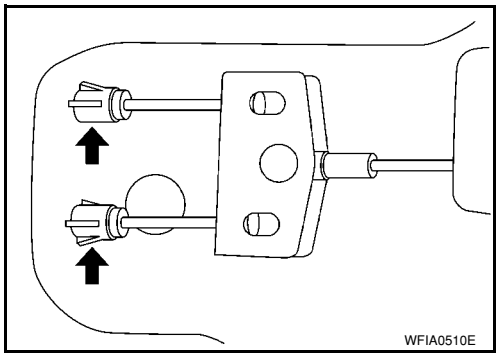

6. Remove device assembly mounting nuts, and remove device assembly from vehicle.
7. Remove rear brake shoe and remove rear cable from the operating lever. Refer to BR-29, "Removal and Installation of Drum Brake Assembly" .
8. Remove the exhaust center tube and heat plate. Refer to EX-4, "Removal and Installation" .

9. Remove rear cable mounting bolt and nut, and then remove rear cable from the vehicle.
10. Remove adjusting nut and front cable from device assembly.

INSTALLATION

1. Installation is in the reverse order of the removal. Tighten mounting bolts and nuts to the specified torque.
2. Adjust clearance of rear brake shoes. Refer to PB-4, "On-Vehicle Service" .

SERVICE DATA AND SPECIFICATIONS (SDS)

Parking Brake Control

INFOID:0000000001703817

Control type	Hand lever
Number of notches [under a force of 196 N (20 kg-f, 44lb-f)]	8 – 9
Number of notches when warning lamp switch comes on	1

Download PDF PDFTown.com | Free Download PDF and eBook

PdfTown.com

Related Results

1. **Download** new **PDF** App 9.0
   Open, Read any **PDF** File, Create, Edit your PDFs. (Highly Recommended)
   PDF-Reader.pdf-format.com

2. Ouvrir Fichier .**PDF**
   Reparer et Ouvrir Des Fichiers. Telechargez Ici (Recommande)
   OuvrirFichiers.com

3. **Windows Fix**
   Free download to fix Windows 7, XP **and** Vista errors! (Recommended)
   pcmightymax.net/2012

AdChoices Chitika | Opt out?

2005 - 2008 Jeep Grand Cherokee WK Service Manual

Posted in Jeep | read more »

Section :
Introduction, Lubrication & Maintenance, Suspension, Differential & Driveline, Brakes, Cooling, Audio/Video, Chime/Buzzer, Electronic Control Modules, Engine Systems, Heated Systems, Horn, Ignition Control, Instrument Cluster, Lamps, Message Systems,

Subaru Impreza WRX and STI 2008 Service Manual

Posted in Subaru | read more »

Section :
General Information, H4DOTC Engine, H4SO Engine, Body, Body Repair, Chassis, Mechanism and Function, STI Body, STI Body Repair, STI Chassis, STI Engine, STI General Information, STI Transmission, STI Wiring, Transmission, Wiring

Land Rover Discovery 3 - LR3 - Workshop Manual

Posted in Land Rover | read more »

Section :
General Info
Identification Codes
Jacking Lifting
Maintenance Schedules
Suspension General Info
Front Suspension

Vote Us

215

Pin it 650

Tweet

Search

Search

Advertisements

Chitika PREMIUM

Related Results

Openen .**DOWNLOAD**
Openen Bestanden in 3 minuten. **Download** het Repair Tool (Aanbevolen)
FixAnyFile.com

Download new **PDF** App 9.0
Open, Read any **PDF** File, Create, Edit your PDFs. (Highly Recommended)
PDF-Reader.pdf-format.com

Windows Fix
Free download to fix Windows 7, XP **and** Vista errors! (Recommended)
pcmightymax.net/2012

Fill In **PDF** Forms Online
Upload **And** Fill In Any **PDF** Form! Subscribe For Just $4.99 per month.
www.PDFFiller.com

Open **PDF** File (Best)
Free Easy Instructions to Open **PDF** File. Only 2 Steps - Try Now.
Open-File.com/PDF

AdChoices Chitika | Opt out?

Category

» Automotive
- » Alfa Romeo
- » Audi
- » BMW
  - » BMW Parts
- » Chevrolet
- » Chrysler
- » Citroen
- » Daewoo
- » Daihatsu
- » Dodge
- » Ferrari
- » Fiat
- » Ford
- » Honda
- » Hyundai
- » Infiniti
- » Isuzu
- » Jeep

Download PDF PDFTown.com | Free Download PDF and eBook

Rear Suspension

Nissan Versa 2008 Service Manual

Posted in Nissan | read more »

Section:
General Information, Engine Mechanical, Engine Lubrication System, Engine Cooling System, Engine Control System, Fuel System, Exhaust System, Accelerator Control System, Transmission/Transaxle, Clutch System, Manual Transaxle,

Dodge Ram 2004 Service Manual

Posted in Dodge | read more »

Section:
Introduction, Lubrication & Maintenance, Suspension, Differential & Driveline, Brakes, Clutch, Cooling, Audio / Video, Chime / Buzzer, Electronic Control Modules, Engine Systems, Heated Systems, Horn, Ignition Control, Instrument Cluster, Lamps, Message Systems, Power Systems, Restraints, Speed Control

1 2 3 4 5 6 7 8 9 ... next page last page

» Lancia
» Land Rover
» Mazda
» Mercedes-Benz
» Mitsubishi
» Mitsubishi Parts
» Nissan
» Opel
» Porsche
» Renault
» SsangYong
» Subaru
» Suzuki
» Toyota
» Toyota Parts
» Volkswagen
» Motorcycle
» Aprilia
» BMW
» Ducati
» Honda
» Kawasaki
» Suzuki
» Yamaha

Feed

TopBlogging 4 TOPOFBLOGS 5 BLOGTOPSITES 9 BLOGRANKINGS

Google™ Custom Search Search

Related Results

1. Openen .DOWNLOAD
Openen Bestanden in 3 minuten. Download het Repair Tool
FixAnyFile.com

2. Download new PDF App 9.0
Open, Read any PDF File, Create, Edit your PDFs. (Highly
PDF-Reader.pdf-format.com

3. Business Services
Find Business Services In Your Area With Local.com!
Local.com

AdChoices Chitika | Opt out?

All Categories:
Alfa Romeo Audi BMW Chevrolet Chrysler Citroen Daewoo Daihatsu Dodge Ferrari Fiat Ford Honda Infiniti Isuzu Jeep Land Rover Mazda Mercedes-Benz Mitsubishi Nissan Opel Peugeot Pontiac Porsche Subaru Suzuki Toyota Volkswagen Volvo Motorcycle Aprilia BMW Motorcycle Ducati Harley-Davidson Honda Motorcycle Kawasaki Kymco Suzuki Motorcycle Yamaha Computers Internet Laptop & Notebook Acer Asus Compaq Evo Compaq Presario HP Compaq HP Pavilion Samsung Sovy Linux Network Overclocking Server Electronic DVD & CD Projector TV Gadget Digital Camera iPod Mobile Phone Nokia Sony Ericsson Games PlayStation Wii Xbox Programming AJAX C++ Eclipse Java MySQL PHP Robotics SAP Software Office Technology Webmaster Others Advertising Credit Card Culture Drawing Education Health Movies Music Philosophy Recipes How To

Home | Sitemap | RSS | Privacy Policy | Contact Us
Copyright @ PDFTown.com 2007 - 2012

SECTION PG

POWER SUPPLY, GROUND & CIRCUIT ELEMENTS

CONTENTS

SERVICE INFORMATION 2

PRECAUTIONS 2
Precaution for Supplemental Restraint System (SRS) "AIR BAG" and "SEAT BELT PRE-TENSIONER" 2

POWER SUPPLY ROUTING CIRCUIT 3
Schematic 3
Wiring Diagram - POWER - 5
Fuse 15
Fusible Link 15
Circuit Breaker (Built Into BCM) 15
Circuit Breaker 15

IPDM E/R (INTELLIGENT POWER DISTRIBUTION MODULE ENGINE ROOM) 16
System Description 16
CAN Communication System Description 17
Function of Detecting Ignition Relay Malfunction 17
CONSULT-III Function (IPDM E/R) 17
Auto Active Test 19
IPDM E/R Terminal Arrangement 22
Terminal and Reference Value for IPDM E/R 23
IPDM E/R Power/Ground Circuit Inspection 25
Inspection with CONSULT-III (Self-Diagnosis) 26
Removal and Installation of IPDM E/R 26

GROUND CIRCUIT 28
Ground Distribution 28

HARNESS 37
Harness Layout 37
Wiring Diagram Codes (Cell Codes) 58

ELECTRICAL UNITS LOCATION 61
Electrical Units Location 61

HARNESS CONNECTOR 65
Description 65

ELECTRICAL UNITS 68
Terminal Arrangement 68

STANDARDIZED RELAY 69
Description 69

SUPER MULTIPLE JUNCTION (SMJ) 71
Terminal Arrangement 71

FUSE BLOCK-JUNCTION BOX (J/B) 72
Terminal Arrangement 72

FUSE AND FUSIBLE LINK BOX 73
Terminal Arrangement 73

SERVICE INFORMATION

PRECAUTIONS

Precaution for Supplemental Restraint System (SRS) "AIR BAG" and "SEAT BELT PRE-TENSIONER"

INFOID:0000000001704690

The Supplemental Restraint System such as “AIR BAG” and “SEAT BELT PRE-TENSIONER”, used along with a front seat belt, helps to reduce the risk or severity of injury to the driver and front passenger for certain types of collision. This system includes seat belt switch inputs and dual stage front air bag modules. The SRS system uses the seat belt switches to determine the front air bag deployment, and may only deploy one front air bag, depending on the severity of a collision and whether the front occupants are belted or unbelted.
Information necessary to service the system safely is included in the SRS and SB section of this Service Manual.

WARNING:

- **To avoid rendering the SRS inoperative, which could increase the risk of personal injury or death in the event of a collision which would result in air bag inflation, all maintenance must be performed by an authorized NISSAN/INFINITI dealer.**
- **Improper maintenance, including incorrect removal and installation of the SRS, can lead to personal injury caused by unintentional activation of the system. For removal of Spiral Cable and Air Bag Module, see the SRS section.**
- **Do not use electrical test equipment on any circuit related to the SRS unless instructed to in this Service Manual. SRS wiring harnesses can be identified by yellow and/or orange harnesses or harness connectors.**

POWER SUPPLY ROUTING CIRCUIT

Schematic

INFOID:0000000001704691

For detailed ground distribution, refer to PG-28, "Ground Distribution" .

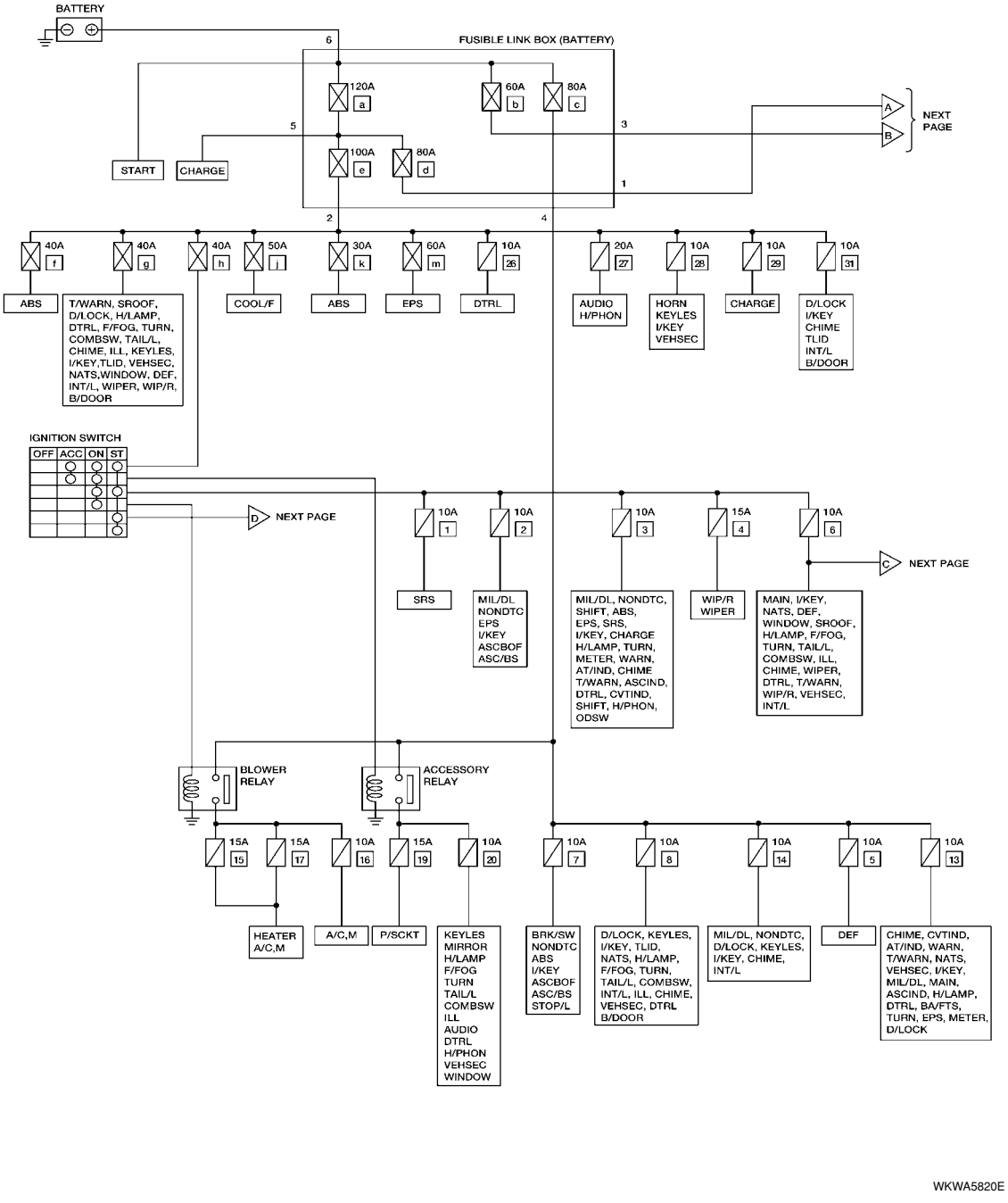

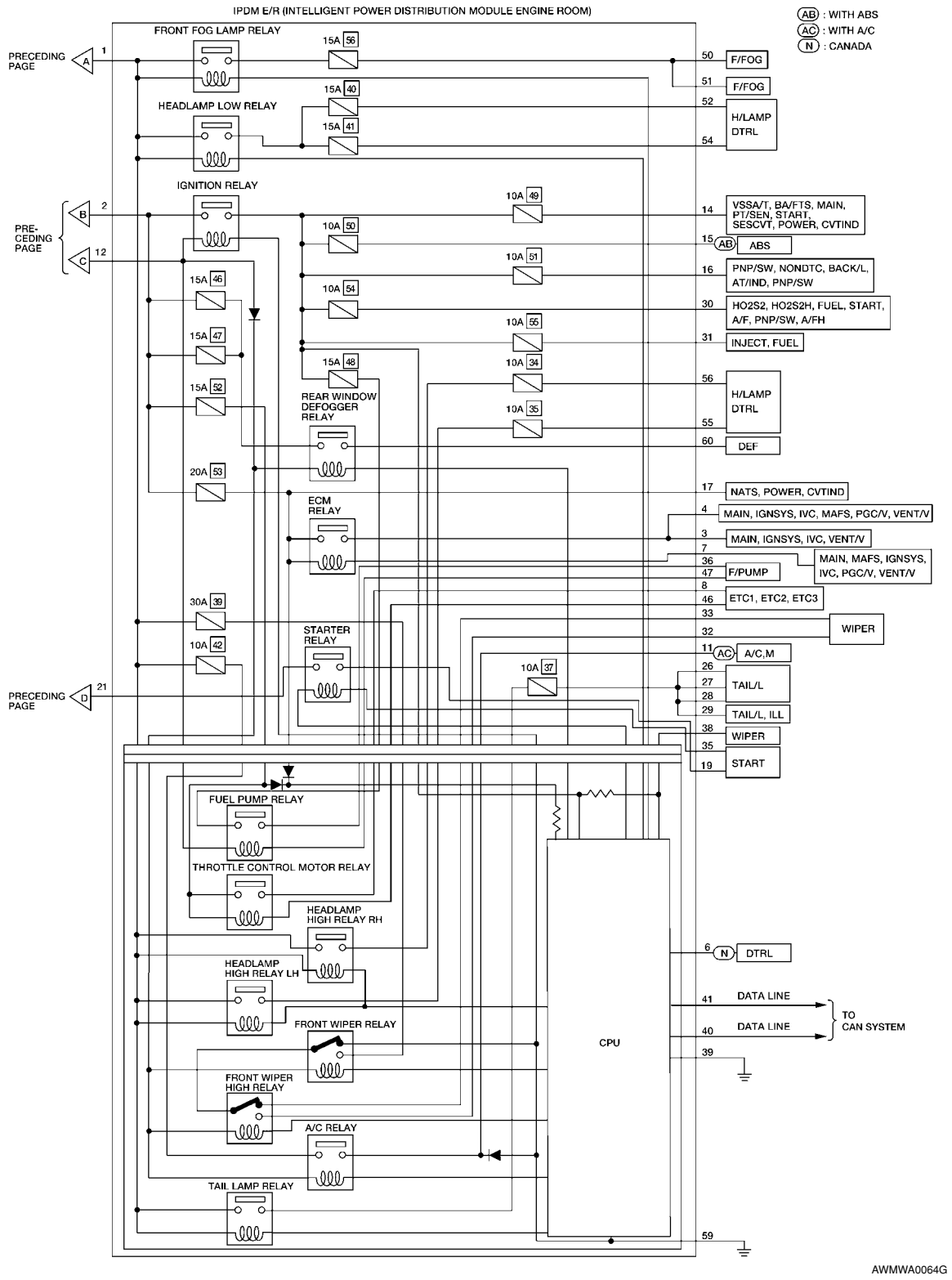
IPDM E/R (INTELLIGENT POWER DISTRIBUTION MODULE ENGINE ROOM)
AB : WITH ABS
AC : WITH A/C
N : CANADA
FRONT FOG LAMP RELAY
HEADLAMP LOW RELAY
IGNITION RELAY
REAR WINDOW DEFOGGER RELAY
ECM RELAY
STARTER RELAY
FUEL PUMP RELAY
THROTTLE CONTROL MOTOR RELAY
HEADLAMP HIGH RELAY RH
HEADLAMP HIGH RELAY LH
FRONT WIPER RELAY
FRONT WIPER HIGH RELAY
A/C RELAY
TAIL LAMP RELAY
CPU
PRECEDING PAGE
PRE-CEDING PAGE
F/FOG
H/LAMP DTRL
VSSA/T, BA/FTS, MAIN, PT/SEN, START, SESCVT, POWER, CVTIND
ABS
PNP/SW, NONDTC, BACK/L, AT/IND, PNP/SW
HO2S2, HO2S2H, FUEL, START, A/F, PNP/SW, A/FH
INJECT, FUEL
DEF
NATS, POWER, CVTIND
MAIN, IGNSYS, IVC, MAFS, PGC/V, VENT/V
MAIN, IGNSYS, IVC, VENT/V
MAIN, MAFS, IGNSYS, IVC, PGC/V, VENT/V
F/PUMP
ETC1, ETC2, ETC3
WIPER
A/C,M
TAIL/L
TAIL/L, ILL
START
DTRL
DATA LINE
TO CAN SYSTEM
AWMWA0064G

Wiring Diagram - POWER -

INFOID:0000000001704692

BATTERY POWER SUPPLY — IGNITION SWITCH IN ANY POSITION

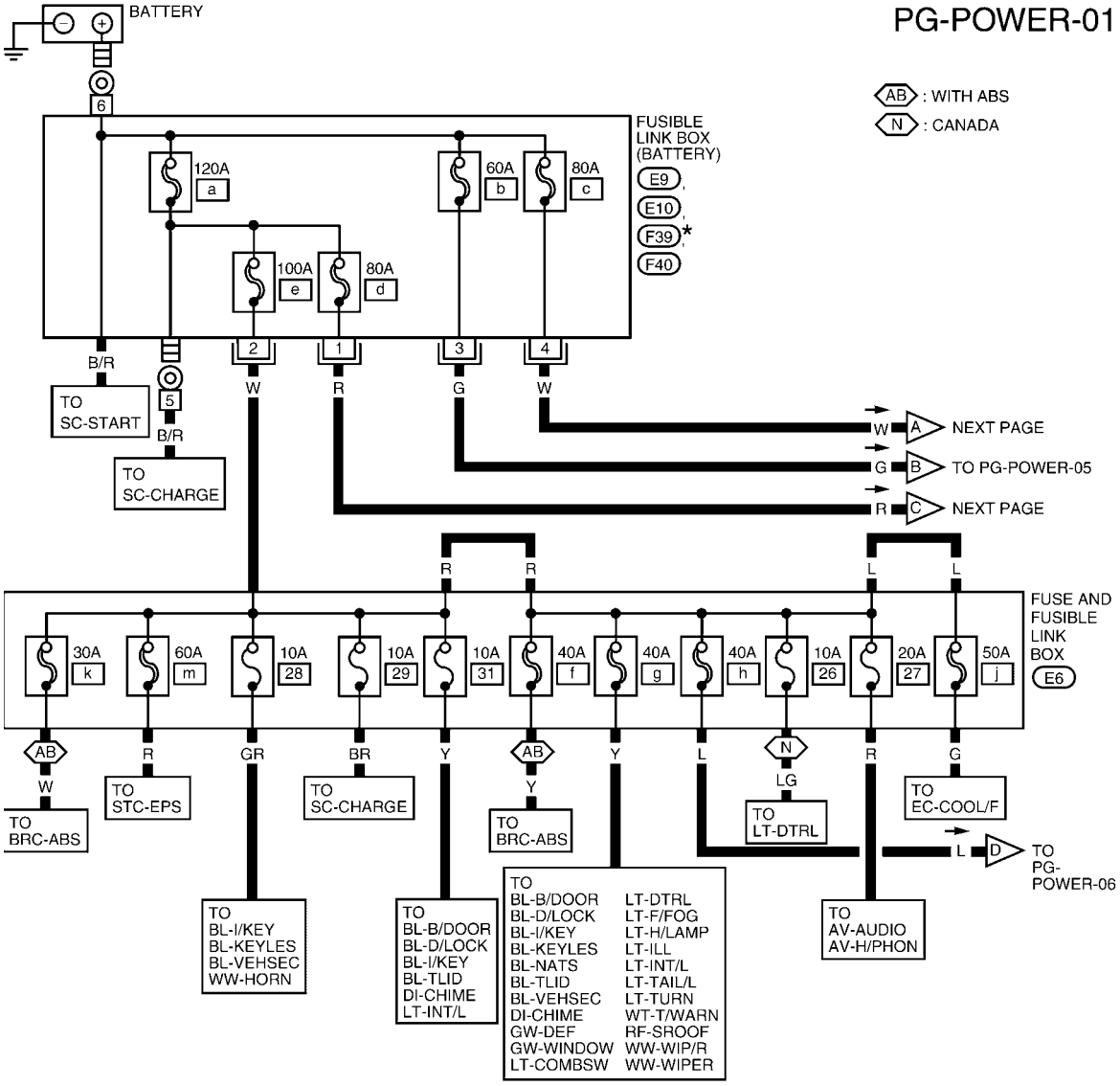

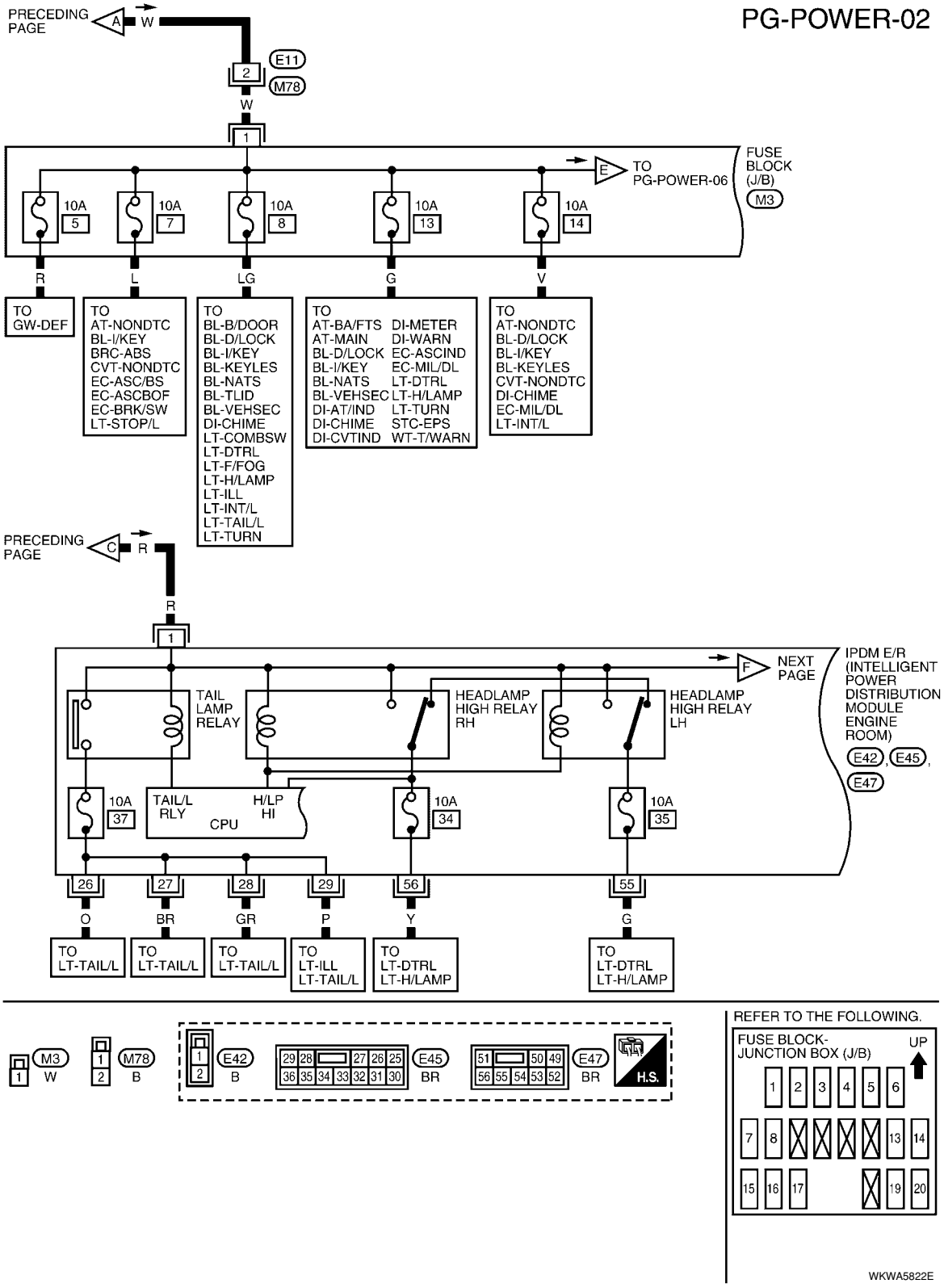
PG-POWER-02
PRECEDING PAGE
A
W
E11
2
M78
W
1
E
TO PG-POWER-06
FUSE BLOCK (J/B)
M3
10A 5
10A 7
10A 8
10A 13
10A 14
R
L
LG
G
V
TO GW-DEF
TO AT-NONDTC BL-I/KEY BRC-ABS CVT-NONDTC EC-ASC/BS EC-ASCBOF EC-BRK/SW LT-STOP/L
TO BL-B/DOOR BL-D/LOCK BL-I/KEY BL-KEYLES BL-NATS BL-TLID BL-VEHSEC DI-CHIME LT-COMBSW LT-DTRL LT-F/FOG LT-H/LAMP LT-ILL LT-INT/L LT-TAIL/L LT-TURN
TO AT-BA/FTS DI-METER AT-MAIN DI-WARN BL-D/LOCK EC-ASCIND BL-I/KEY EC-MIL/DL BL-NATS LT-DTRL BL-VEHSEC LT-H/LAMP DI-AT/IND LT-TURN DI-CHIME STC-EPS DI-CVTIND WT-T/WARN
TO AT-NONDTC BL-D/LOCK BL-I/KEY BL-KEYLES CVT-NONDTC DI-CHIME EC-MIL/DL LT-INT/L
PRECEDING PAGE
C
R
R
1
F
NEXT PAGE
IPDM E/R (INTELLIGENT POWER DISTRIBUTION MODULE ENGINE ROOM)
E42, E45, E47
TAIL LAMP RELAY
HEADLAMP HIGH RELAY RH
HEADLAMP HIGH RELAY LH
10A 37
TAIL/L RLY
H/LP HI
CPU
10A 34
10A 35
26
27
28
29
56
55
O
BR
GR
P
Y
G
TO LT-TAIL/L
TO LT-TAIL/L
TO LT-TAIL/L
TO LT-ILL LT-TAIL/L
TO LT-DTRL LT-H/LAMP
TO LT-DTRL LT-H/LAMP
M3 W
M78 B
E42 B
E45 BR
E47 BR
H.S.
REFER TO THE FOLLOWING.
FUSE BLOCK-JUNCTION BOX (J/B)
UP
WKWA5822E

PG-POWER-03

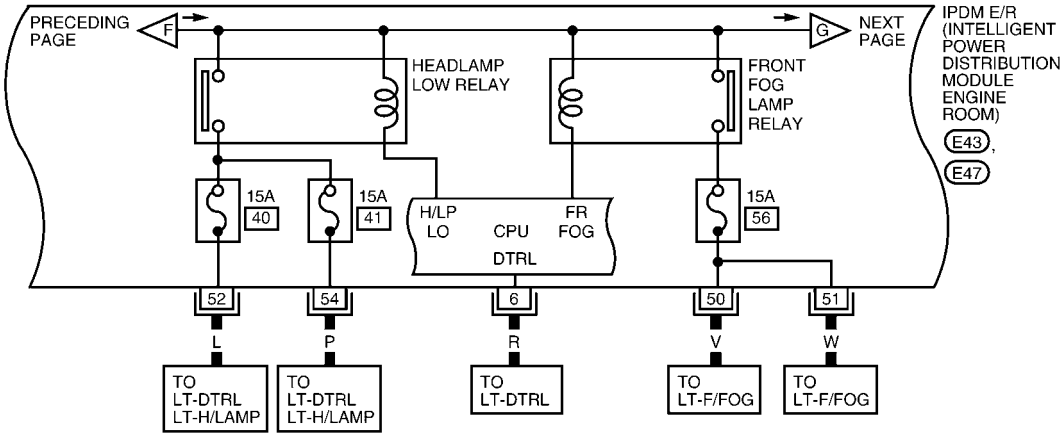

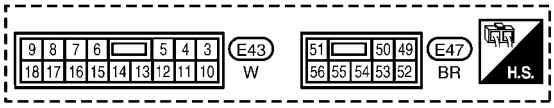

LKWA0374E

PG-POWER-04

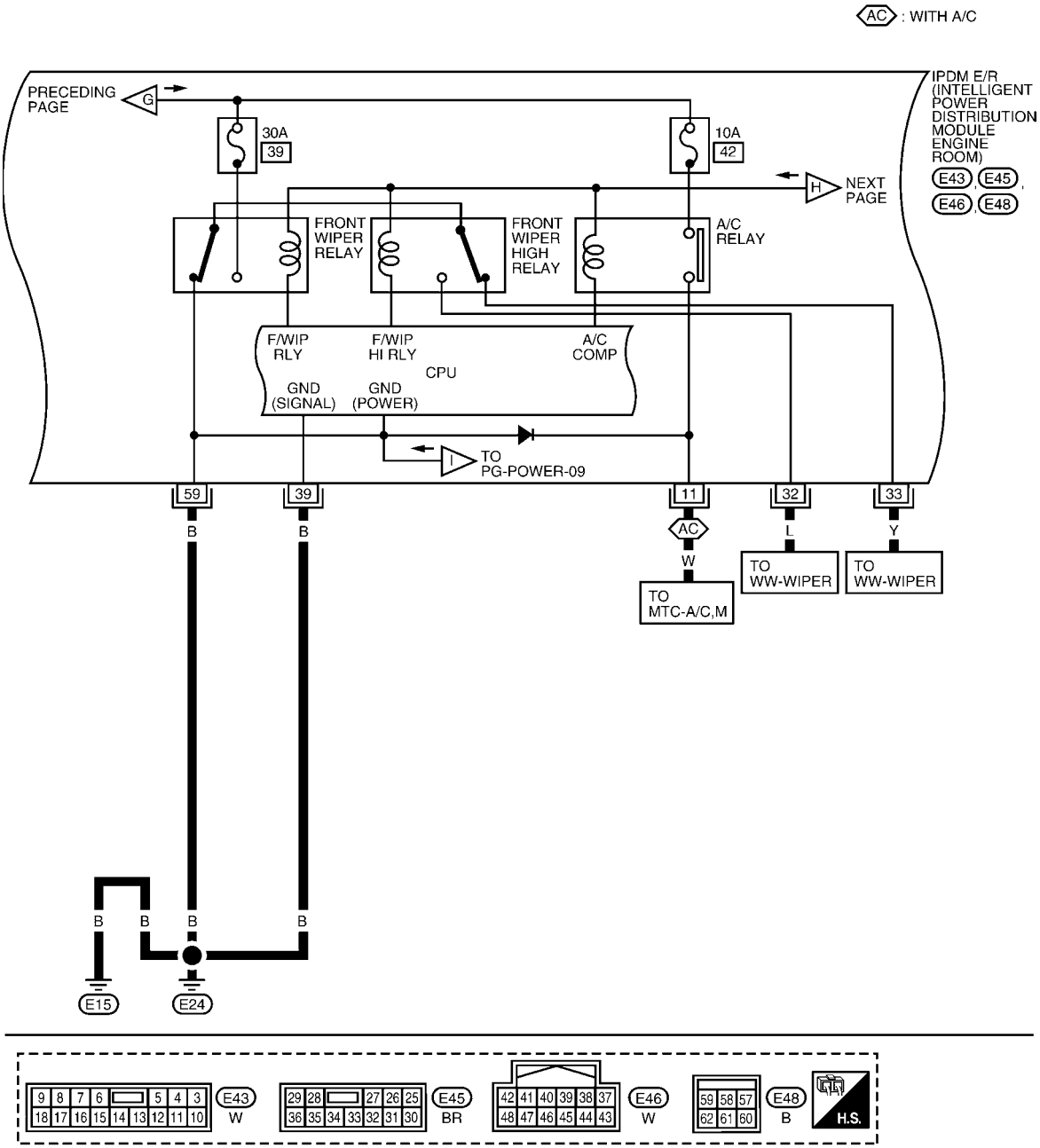

AWMWA0066G

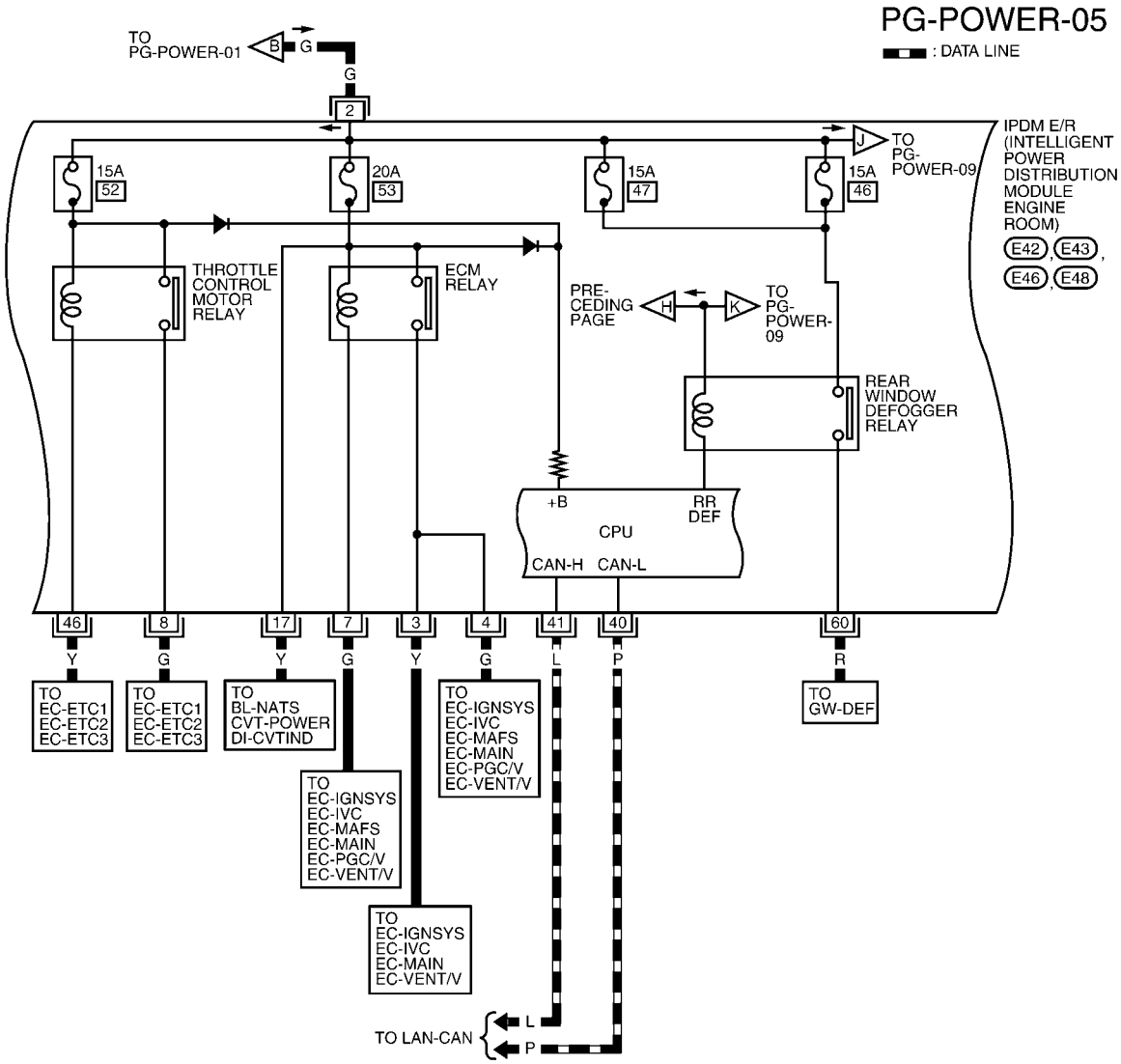
PG-POWER-05
: DATA LINE
TO PG-POWER-01
B
G
G
2
IPDM E/R (INTELLIGENT POWER DISTRIBUTION MODULE ENGINE ROOM)
E42, E43, E46, E48
J
TO PG-POWER-09
15A 52
20A 53
15A 47
15A 46
THROTTLE CONTROL MOTOR RELAY
ECM RELAY
PRE-CEDING PAGE
H
K
TO PG-POWER-09
REAR WINDOW DEFOGGER RELAY
+B
RR DEF
CPU
CAN-H
CAN-L
46
8
17
7
3
4
41
40
60
Y
G
Y
G
Y
G
L
P
R
TO EC-ETC1 EC-ETC2 EC-ETC3
TO EC-ETC1 EC-ETC2 EC-ETC3
TO BL-NATS CVT-POWER DI-CVTIND
TO EC-IGNSYS EC-IVC EC-MAFS EC-MAIN EC-PGC/V EC-VENT/V
TO EC-IGNSYS EC-IVC EC-MAFS EC-MAIN EC-PGC/V EC-VENT/V
TO EC-IGNSYS EC-IVC EC-MAIN EC-VENT/V
TO GW-DEF
TO LAN-CAN
L
P

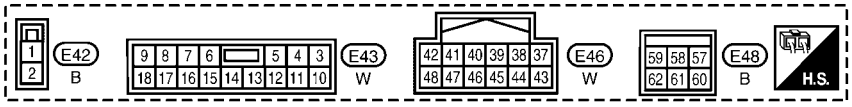
1
2
E42
B
9 8 7 6 5 4 3
18 17 16 15 14 13 12 11 10
E43
W
42 41 40 39 38 37
48 47 46 45 44 43
E46
W
59 58 57
62 61 60
E48
B
H.S.

LKWA0376E

ACCESSORY POWER SUPPLY — IGNITION SWITCH IN ACC AND/OR ON

PG-POWER-06

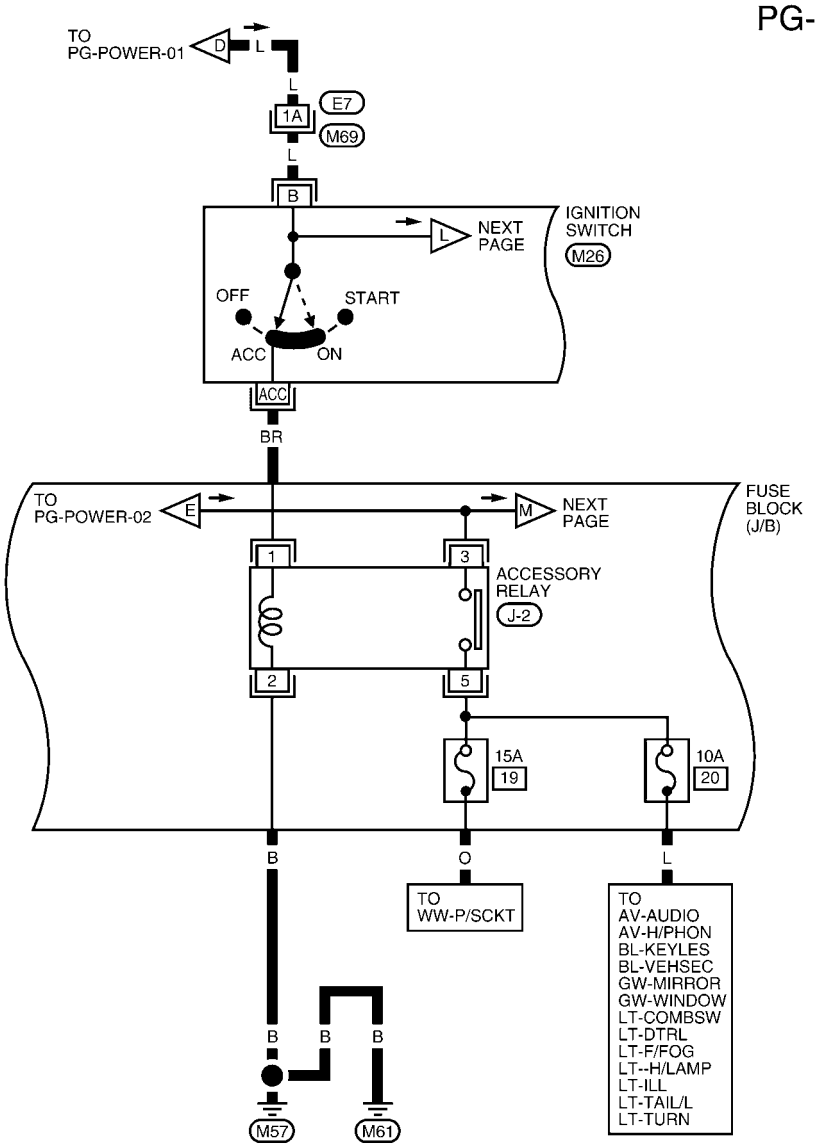

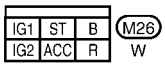

REFER TO THE FOLLOWING.
M69 - SUPER MULTIPLE JUNCTION (SMJ)

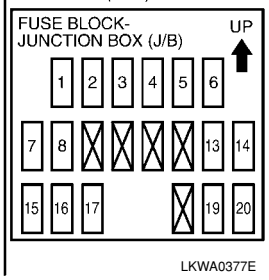

IGNITION POWER SUPPLY — IGNITION SWITCH IN ON

PG-POWER-07

AC : WITH A/C

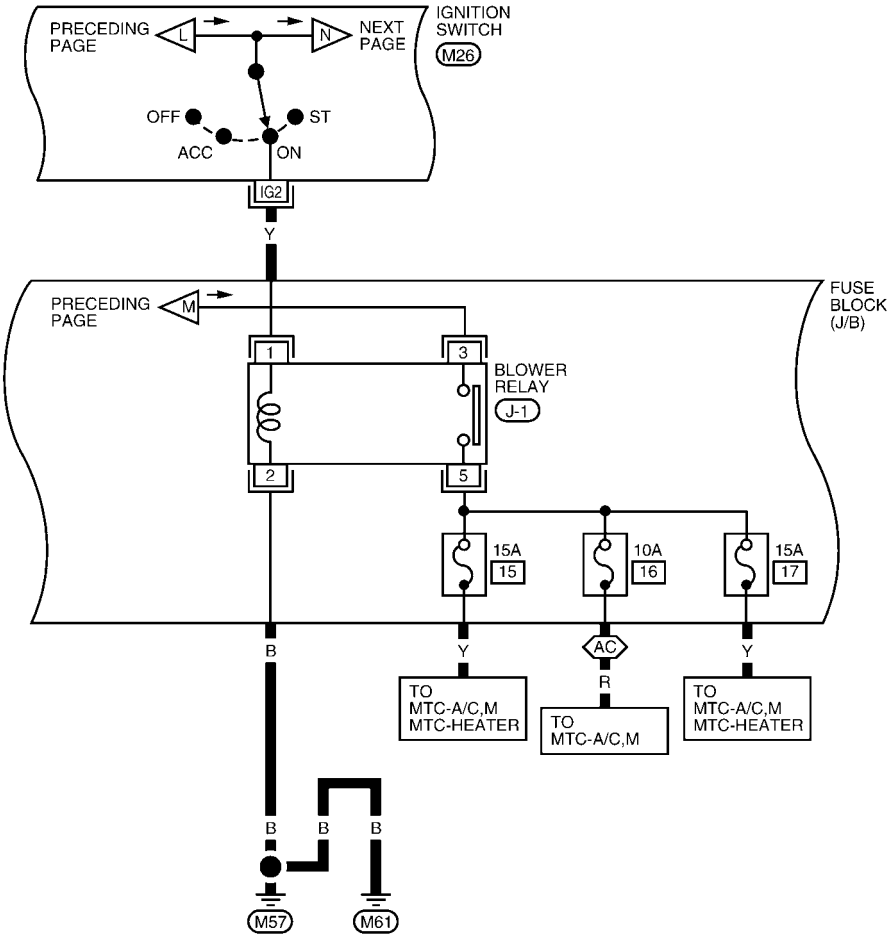

IG1	ST	B	M26
IG2	ACC	R	W

REFER TO THE FOLLOWING.

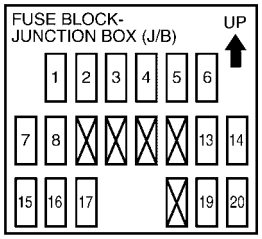

AWMWA0067G

IGNITION POWER SUPPLY — IGNITION SWITCH IN ON AND/OR START.

PG-POWER-08

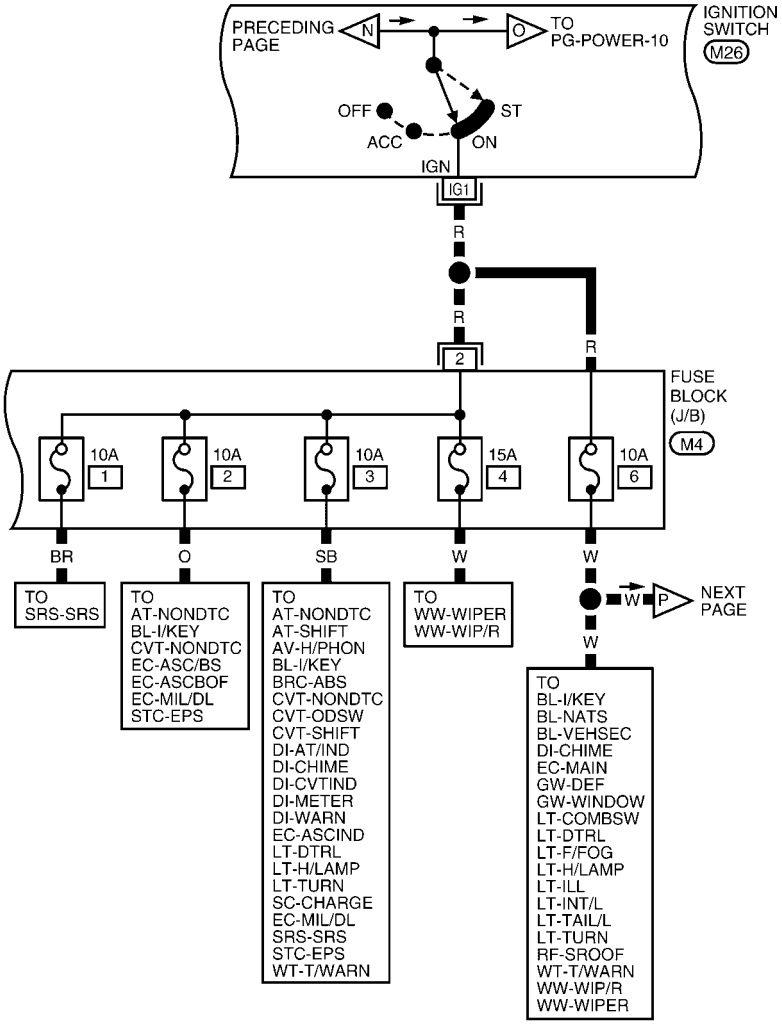

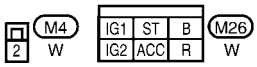

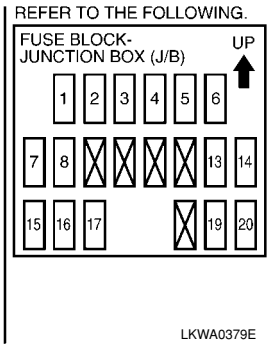

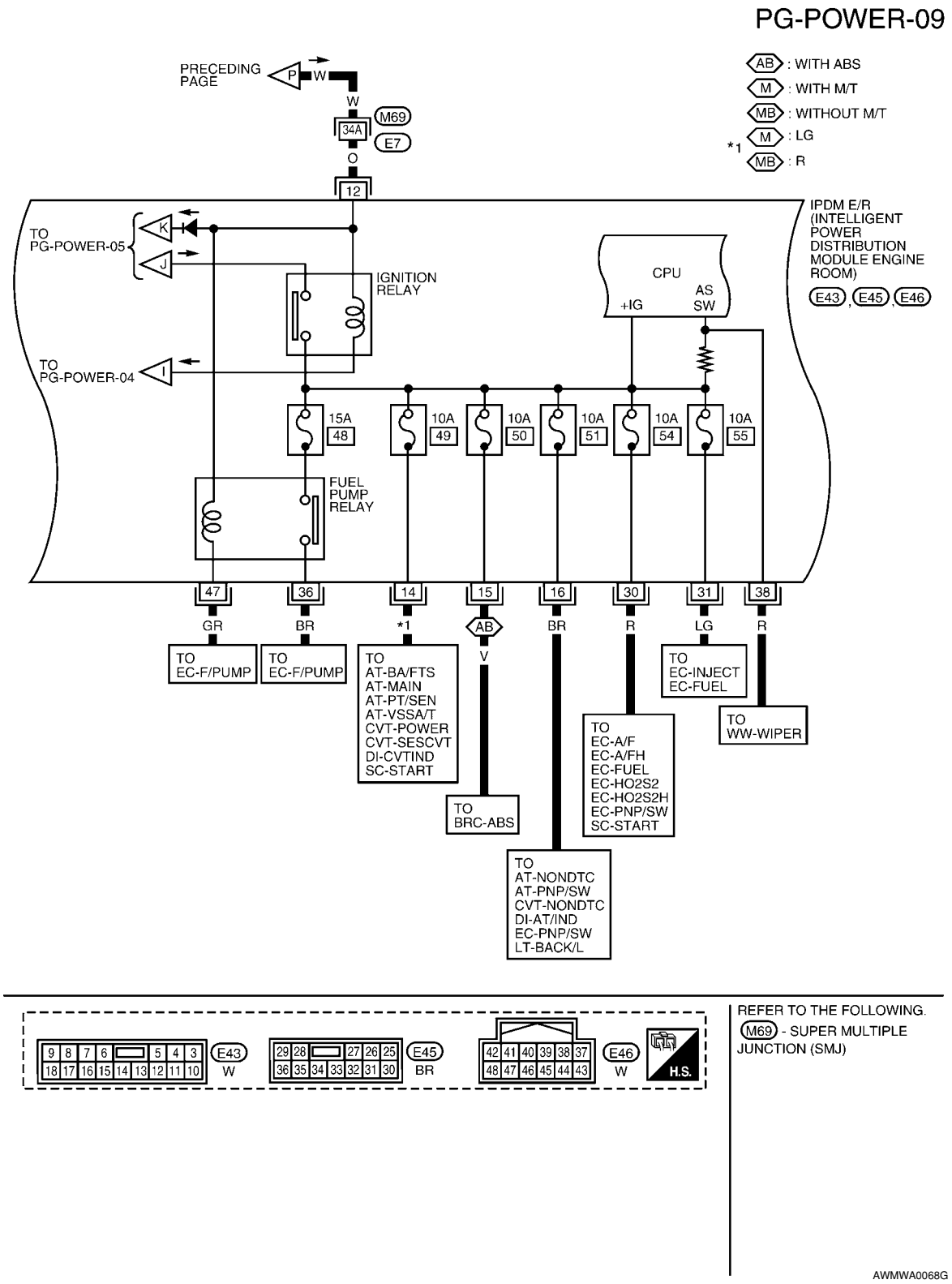
PG-POWER-09
PRECEDING PAGE
P
W
W
M69
34A
E7
O
12
AB : WITH ABS
M : WITH M/T
MB : WITHOUT M/T
*1 M : LG
MB : R
IPDM E/R (INTELLIGENT POWER DISTRIBUTION MODULE ENGINE ROOM)
E43, E45, E46
TO PG-POWER-05
K
J
IGNITION RELAY
CPU
+IG
AS SW
TO PG-POWER-04
I
15A 48
10A 49
10A 50
10A 51
10A 54
10A 55
FUEL PUMP RELAY
47
36
14
15
16
30
31
38
GR
BR
*1
AB
BR
R
LG
R
V
TO EC-F/PUMP
TO EC-F/PUMP
TO AT-BA/FTS AT-MAIN AT-PT/SEN AT-VSSA/T CVT-POWER CVT-SESCVT DI-CVTIND SC-START
TO BRC-ABS
TO AT-NONDTC AT-PNP/SW CVT-NONDTC DI-AT/IND EC-PNP/SW LT-BACK/L
TO EC-A/F EC-A/FH EC-FUEL EC-HO2S2 EC-HO2S2H EC-PNP/SW SC-START
TO EC-INJECT EC-FUEL
TO WW-WIPER
E43 W
E45 BR
E46 W
H.S.
REFER TO THE FOLLOWING.
M69 - SUPER MULTIPLE JUNCTION (SMJ)
AWMWA0068G

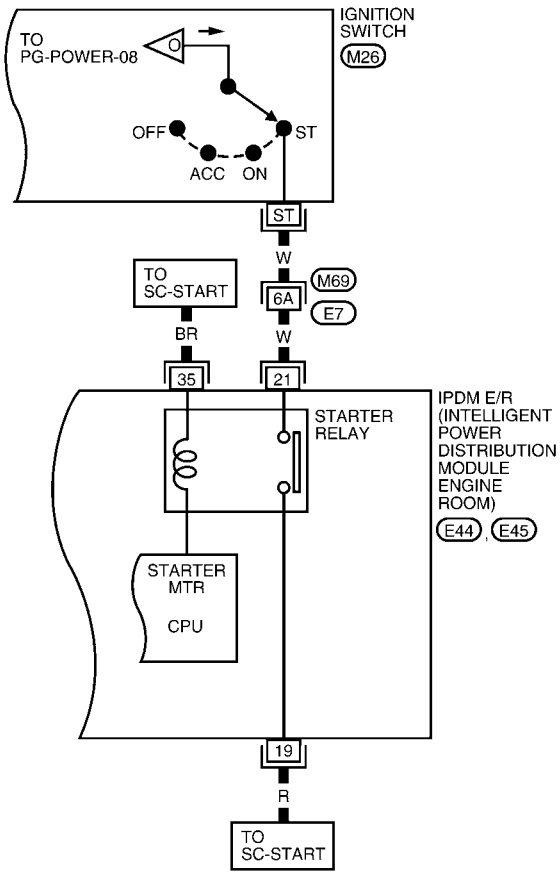

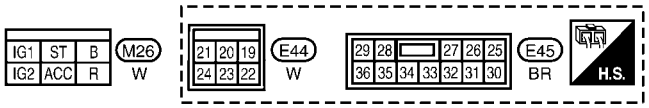

REFER TO THE FOLLOWING.
M69 - SUPER MULTIPLE JUNCTION (SMJ)

LKWA0380E

Fuse

INFOID:0000000001704693

- If fuse is blown, be sure to eliminate cause of malfunction before installing new fuse.
- Use fuse of specified rating. Never use fuse of more than specified rating.
- Do not partially install fuse; always insert it into fuse holder properly.
- Remove fuse for “ELECTRICAL PARTS (BAT)” if vehicle is not used for a long period of time.

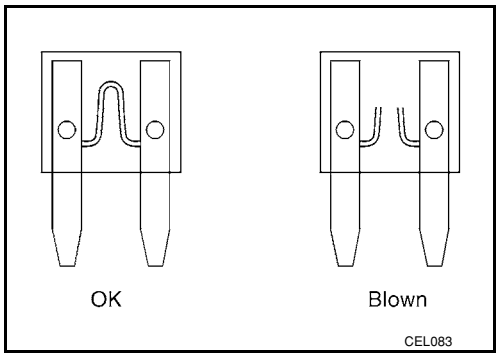

Fusible Link

INFOID:0000000001704694

A melted fusible link can be detected either by visual inspection or by feeling with finger tip. If its condition is questionable, use circuit tester or test lamp.

CAUTION:

- **If fusible link should melt, it is possible that critical circuit (power supply or large current carrying circuit) is shorted. In such a case, carefully check and eliminate cause of malfunction.**
- **Never wrap outside of fusible link with vinyl tape. Important: Never let fusible link touch any other wiring harness, vinyl or rubber parts.**

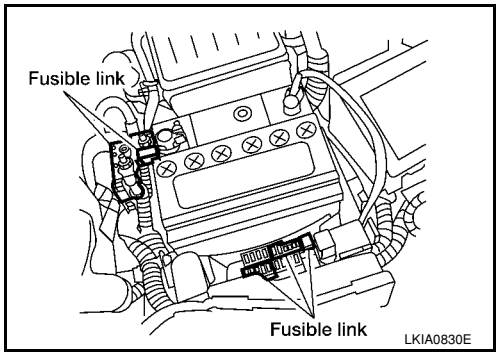

Circuit Breaker (Built Into BCM)

INFOID:0000000001704695

For example, when current is 30A, the circuit is broken within 8 to 20 seconds.

A circuit breaker is used for the following systems:

- Power windows
- Power sunroof

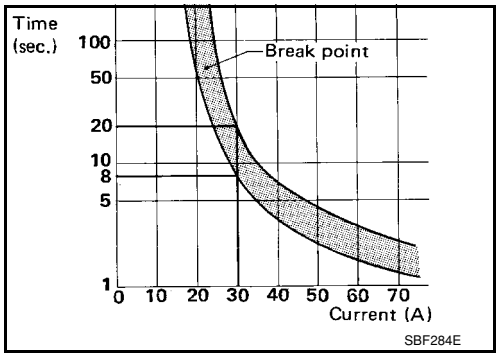

Circuit Breaker

INFOID:0000000001704696

The PTC thermistor generates heat in response to current flow. The temperature (and resistance) of the thermistor element varies with current flow. Excessive current flow will cause the element's temperature to rise. When the temperature reaches a specified level, the electrical resistance will rise sharply to control the circuit current. Reduced current flow will cause the element to cool. Resistance falls accordingly and normal circuit current flow is allowed to resume.

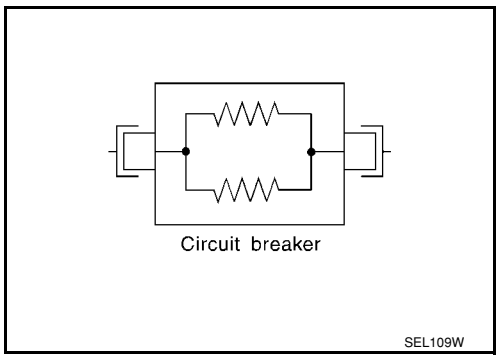

IPDM E/R (INTELLIGENT POWER DISTRIBUTION MODULE ENGINE ROOM)

System Description

INFOID:0000000001704697

- IPDM E/R (Intelligent Power Distribution Module Engine Room) integrates the relay box and fuse block which were originally placed in engine compartment. It controls integrated relays via IPDM E/R control circuits.
- IPDM E/R-integrated control circuits perform ON-OFF operation of relays, CAN communication control, oil pressure switch signal reception, etc.
- It controls operation of each electrical component via ECM, BCM and CAN communication lines.

CAUTION:

None of the IPDM E/R integrated relays can be removed.

SYSTEMS CONTROLLED BY IPDM E/R

1. Lamp control
   Using CAN communication lines, it receives signals from the BCM and controls the following lamps:
   - Headlamps (High, Low)
   - Parking lamps
   - Tail and license plate lamps
   - Front fog lamps
2. Wiper control
   Using CAN communication lines, it receives signals from the BCM and controls the front wipers.
3. Rear window defogger relay control
   Using CAN communication lines, it receives signals from the BCM and controls the rear window defogger relay.
4. A/C compressor control
   Using CAN communication lines, it receives signals from the ECM and controls the A/C compressor (magnet clutch).
5. Starter control
   Using CAN communication lines, it receives signals from the BCM and controls the starter relay.
6. Cooling fan control
   Using CAN communication lines, it receives signals from the ECM and controls the cooling fan relays.
7. Horn control
   Using CAN communication lines, it receives signals from the BCM and controls the horn relay.
8. Daytime light system control (Canada only)
   Using CAN communication lines, it receives signals from the BCM and controls the daytime light relay.

CAN COMMUNICATION LINE CONTROL

With CAN communication, by connecting each control unit using two communication lines (CAN L-line, CAN H-line), it is possible to transmit a maximum amount of information with minimum wiring. Each control unit can transmit and receive data, and reads necessary information only.

1. Fail-safe control
   - When CAN communication with other control units is impossible, IPDM E/R performs fail-safe control. After CAN communication returns to normal operation, it also returns to normal control.
   - Operation of control parts by IPDM E/R during fail-safe mode is as follows:

Controlled system	Fail-safe mode
Headlamp	• With the ignition switch ON, headlamp low relay is ON, headlamp high relays are OFF, and daytime light system (Canada only) is OFF. • With the ignition switch OFF, the headlamp relays are OFF.
Tail, license plate and parking lamps	• With the ignition switch ON, the tail lamp relay is ON. • With the ignition switch OFF, the tail lamp relay is OFF.
Cooling fan	• With the ignition switch ON, cooling fan relay-1, relay-2, and relay-3 are ON. • With the ignition switch OFF, all cooling fan relays are OFF.
Front wiper	Until the ignition switch is turned off, the front wiper relays remain in the same status they were in just before fail–safe control was initiated.

Controlled system	Fail-safe mode
Rear window defogger	Rear window defogger relay OFF
A/C compressor	A/C relay is OFF
Front fog lamps	Front fog lamp relay OFF

IPDM E/R STATUS CONTROL

In order to save power, IPDM E/R switches status by itself based on each operating condition.

1. CAN communication status
   - CAN communication is normally performed with other control units.
   - Individual unit control by IPDM E/R is normally performed.
   - When sleep request signal is received from BCM, mode is switched to sleep waiting status.
2. Sleep waiting status
   - Process to stop CAN communication is activated.
   - All systems controlled by IPDM E/R are stopped. When 1 second has elapsed after CAN communication with other control units is stopped, mode switches to sleep status.
3. Sleep status
   - IPDM E/R operates in low current-consumption mode.
   - CAN communication is stopped.
   - When a change in CAN communication signal is detected, mode switches to CAN communication status.
   - When a change in ignition switch signal is detected, mode switches to CAN communication status.

CAN Communication System Description

INFOID:0000000001704698

Refer to LAN-6, "System Description".

Function of Detecting Ignition Relay Malfunction

INFOID:0000000001704699

- When the integrated ignition relay is stuck in a "closed contact" position and cannot be turned OFF, IPDM E/R turns ON tail and parking lamps for 10 minutes to indicate IPDM E/R malfunction.
- When the state of the integrated ignition relay does not agree with the state of the ignition switch signal received via CAN communication, the IPDM E/R activates the tail lamp relay.

Ignition switch signal	Ignition relay status	Tail lamp relay
ON	ON	—
OFF	OFF	—
ON	OFF	—
OFF	ON	ON (10 minutes)

NOTE:
When the ignition switch is turned ON, the tail lamps are OFF.

CONSULT-III Function (IPDM E/R)

INFOID:0000000001704700

CONSULT-III can display each diagnostic item using the diagnostic test modes shown following.

IPDM E/R diagnostic Mode	Description
SELF-DIAG RESULTS	Displays IPDM E/R self-diagnosis results.
DATA MONITOR	Displays IPDM E/R input/output data in real time.
CAN DIAG SUPPORT MNTR	The result of transmit/receive diagnosis of CAN communication can be read.
ACTIVE TEST	Operation of electrical loads can be checked by sending drive signal to them.

SELF-DIAGNOSTIC RESULTS

Display Item List

Display items	CONSULT-III display code	Malfunction detection	TIME		Possible causes
			CRNT	PAST	
NO DTC IS DETECTED. FURTHER TESTING MAY BE REQUIRED.	—	—	—	—	—
CAN COMM CIRC	U1000	• If CAN communication reception/transmission data has a malfunction, or if any of the control units fail, data reception/transmission cannot be confirmed. • When the data in CAN communication is not received before the specified time.	X	X	Any of items listed below have errors: • TRANSMIT DIAG • ECM • BCM/SEC
IGN RELAY ON	—	When the ignition switch is not in the ON position, the ignition relay in the IPDM E/R is ON.	X	X	
IGN RELAY OFF	—	When the ignition switch is not in the ON position, the ignition relay in the IPDM E/R is OFF.	X	X	
EEPROM	—	Malfunction is detected with the integrated EEPROM memory diagnosis.	X	X	

x: Applicable

NOTE:

The details for display of the period are as follows:

- CRNT: Error currently detected with IPDM E/R.
- PAST: Error detected in the past and placed in IPDM E/R memory.

DATA MONITOR

All Signals, Main Signals, Selection From Menu

Item name	CONSULT-III screen display	Display or unit	Monitor item selection			Description
			ALL SIGNALS	MAIN SIGNALS	SELECTION FROM MENU	
Motor fan request	MOTOR FAN REQ	1/2/3/4	X	X	X	Signal status input from ECM
Compressor request	AC COMP REQ	ON/OFF	X	X	X	Signal status input from ECM
Parking, license, and tail lamp request	TAIL & CLR REQ	ON/OFF	X	X	X	Signal status input from BCM
Headlamp low beam request	HL LO REQ	ON/OFF	X	X	X	Signal status input from BCM
Headlamp high beam request	HL HI REQ	ON/OFF	X	X	X	Signal status input from BCM
Front fog request	FR FOG REQ	ON/OFF	X	X	X	Signal status input from BCM
FR wiper request	FR WIP REQ	STOP/1LO/LO/HI	X	X	X	Signal status input from BCM
Wiper auto stop	WIP AUTO STOP	ACT P/STOP P	X	X	X	Output status of IPDM E/R
Wiper protection	WIP PROT	OFF/LS/HS/Block	X	X	X	Control status of IPDM E/R
Starter request	ST RLY REQ	ON/OFF	X		X	Status of input signal (*1)
Ignition relay status	IGN RLY	ON/OFF	X	X	X	Ignition relay status monitored with IPDM E/R
Rear defogger request	RR DEF REQ	ON/OFF	X	X	X	Signal status input from BCM
Oil pressure switch	OIL P SW	OPEN/CLOSE	X		X	Signal status input from IPDM E/R
Hood switch	HOOD SW (*2)	OFF	X		X	Signal status input from IPDM E/R

Item name	CONSULT-III screen display	Display or unit	Monitor item selection			Description
			ALL SIGNALS	MAIN SIGNALS	SELECTION FROM MENU	
Theft warning horn request	THFT HRN REQ	ON/OFF	X		X	Signal status input from BCM
Horn chirp	HORN CHIRP	ON/OFF	X		X	Output status of IPDM E/R
Daytime light request	DTRL REQ	ON/OFF	X		X	Signal status input from BCM

*1 Perform monitoring of IPDM E/R data with the ignition switch ON. When the ignition switch is in ACC position, display may not be correct.

*2 This item is displayed, but does not function.

CAN DIAG SUPPORT MNTR

Refer to LAN-8 .

ACTIVE TEST

Display Item List

Test name	CONSULT-III screen display	Description
Head, tail, fog lamp output	EXTERNAL LAMPS	With a certain ON-OFF operation (OFF, TAIL, LO, HI, FOG), the front fog lamp, headlamp low, headlamp high RH, headlamp high LH, and tail lamp relays can be operated.
Rear defogger output	REAR DEFOGGER	With a certain ON-OFF operation, the rear defogger relay can be operated.
Front wiper (HI, LO) output	FRONT WIPER	With a certain operation (OFF, HI ON, LO ON), the front wiper relays (Lo, Hi) can be operated.
Cooling fan output	MOTOR FAN	With a certain operation (1, 2, 3, 4), the cooling fan relays can be operated.
Horn output	HORN	With a certain ON-OFF operation, the horn relay can be operated.

Auto Active Test

INFOID:0000000001704701

DESCRIPTION

- In auto active test mode, operation inspection can be performed when IPDM E/R sends a drive signal to the following systems:
- Rear window defogger
- Front wipers
- Tail, license and parking lamps
- Daytime lamp system (Canada only)
- Front fog lamps
- Headlamps (High, Low)
- A/C compressor (magnet clutch)
- Cooling fan

OPERATION PROCEDURE

1. Close hood and front door RH, and lift wiper arms away from windshield (to prevent glass damage by wiper operation).
   NOTE:
   When auto active test is performed with hood opened, sprinkle water on windshield beforehand.
2. Turn ignition switch OFF.
3. Turn ignition switch ON and, within 20 seconds, press front door switch LH 20 times. Then turn ignition switch OFF.
4. Turn ignition switch ON within 10 seconds after ignition switch OFF.
5. When auto active test mode is actuated, horn chirps once.
6. After a series of operations is repeated three times, auto active test is completed.

NOTE:
When auto active test mode has to be cancelled halfway, turn ignition switch OFF.
CAUTION:
Be sure to perform BL-37, "Door Switch Check (Hatchback)" when the auto active test cannot be performed.

INSPECTION IN AUTO ACTIVE TEST MODE

When auto active test mode is actuated, the following six steps are repeated three times.

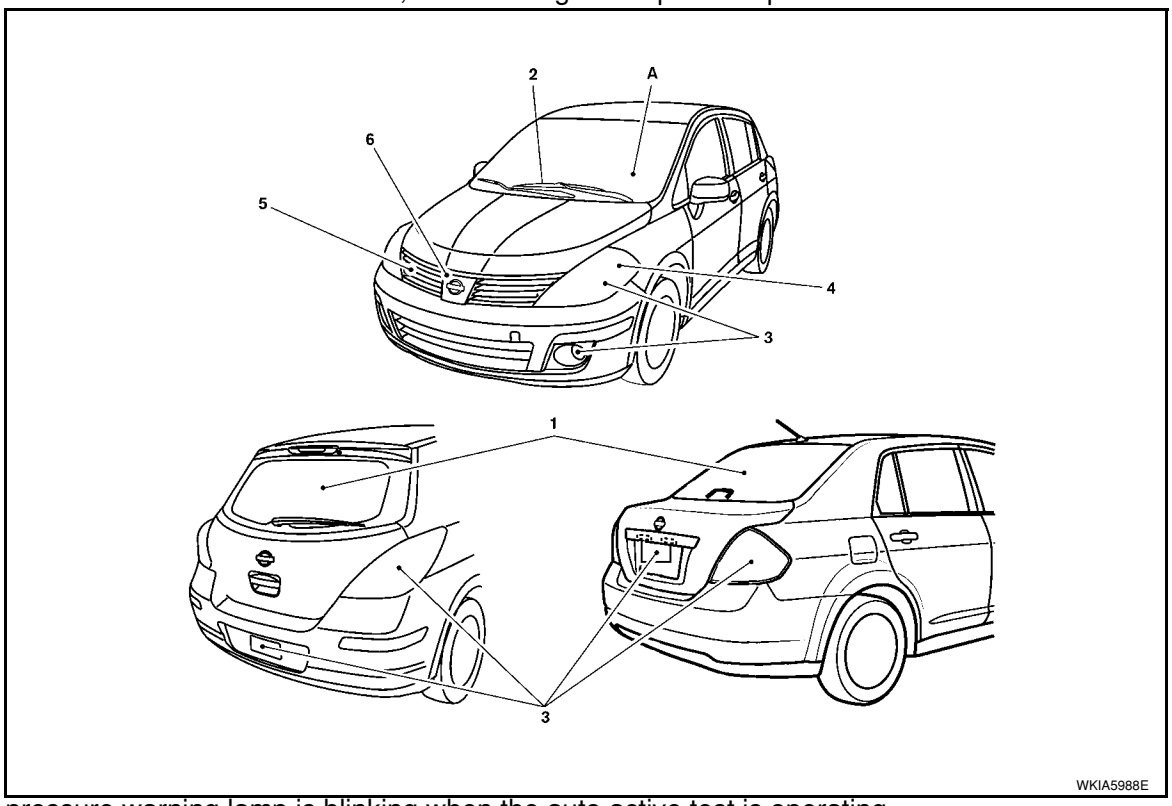

(A): Oil pressure warning lamp is blinking when the auto active test is operating.

Item Number	Test Item	Operation Time/Frequency
1	Rear window defogger	10 seconds
2	Front wipers	LOW 5 seconds then HIGH 5 seconds
3	Daytime light system (Canada only)	10 seconds
3	Tail, license, and parking lamps	10 seconds
3	Front fog lamps	10 seconds
4	Headlamps (low)	20 seconds
4	Headlamps (high)	ON-OFF 5 times
5	A/C compressor (magnet clutch)	ON-OFF 5 times
6	Cooling fan	LOW 5 seconds then HIGH 5 seconds

Concept of Auto Active Test

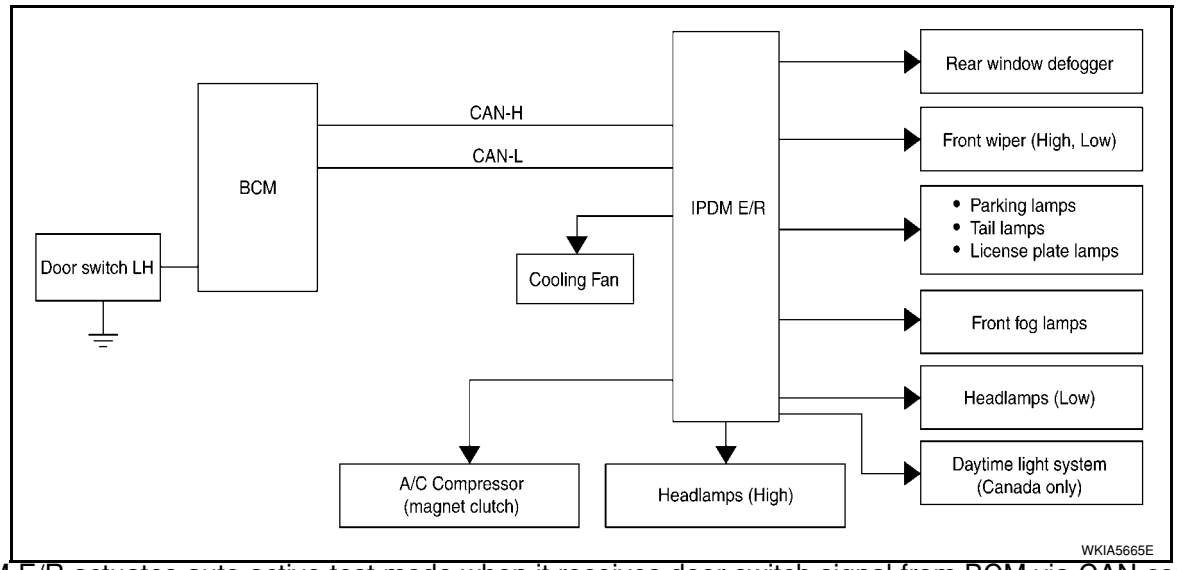

- IPDM E/R actuates auto active test mode when it receives door switch signal from BCM via CAN communication line. Therefore, when auto active test mode is activated successfully, CAN communication between IPDM E/R and BCM is normal.
- If any of the systems controlled by IPDM E/R cannot be operated, possible cause can be easily diagnosed using auto active test.

Diagnosis chart in auto active test mode

Symptom	Inspection contents		Possible cause
Rear window defogger does not operate.	Perform auto active test. Does rear window defogger operate?	YES	• BCM signal input circuit
		NO	• Rear window defogger relay • Open circuit of rear window defogger • IPDM E/R malfunction • Harness or connector malfunction between IPDM E/R and rear window defogger
Any of front wipers, tail and parking lamps, front fog lamps, daytime light system (Canada only), and headlamps (High, Low) do not operate.	Perform auto active test. Does system in question operate?	YES	• BCM signal input system
		NO	• Lamp/wiper motor malfunction • Lamp/wiper motor ground circuit malfunction • Harness/connector malfunction between IPDM E/R and system in question • IPDM E/R (integrated relay) malfunction
A/C compressor does not operate.	Perform auto active test. Does magnet clutch operate?	YES	• BCM signal input circuit • CAN communication signal between BCM and ECM • CAN communication signal between ECM and IPDM E/R
		NO	• Magnet clutch malfunction • Harness/connector malfunction between IPDM E/R and magnet clutch • IPDM E/R (integrated relay) malfunction
Cooling fan does not operate.	Perform auto active test. Does cooling fan operate?	YES	• ECM signal input circuit • CAN communication signal between ECM and IPDM E/R
		NO	• Cooling fan motor malfunction • Harness/connector malfunction between IPDM E/R and cooling fan motor • IPDM E/R (integrated relay) malfunction
Oil pressure warning lamp does not operate.	Perform auto active test. Does oil pressure warning lamp blink?	YES	• Harness/connector malfunction between IPDM E/R and oil pressure switch • Oil pressure switch malfunction • IPDM E/R
		NO	• CAN communication signal between BCM and combination meter • Combination meter

IPDM E/R Terminal Arrangement

INFOID:0000000001704702

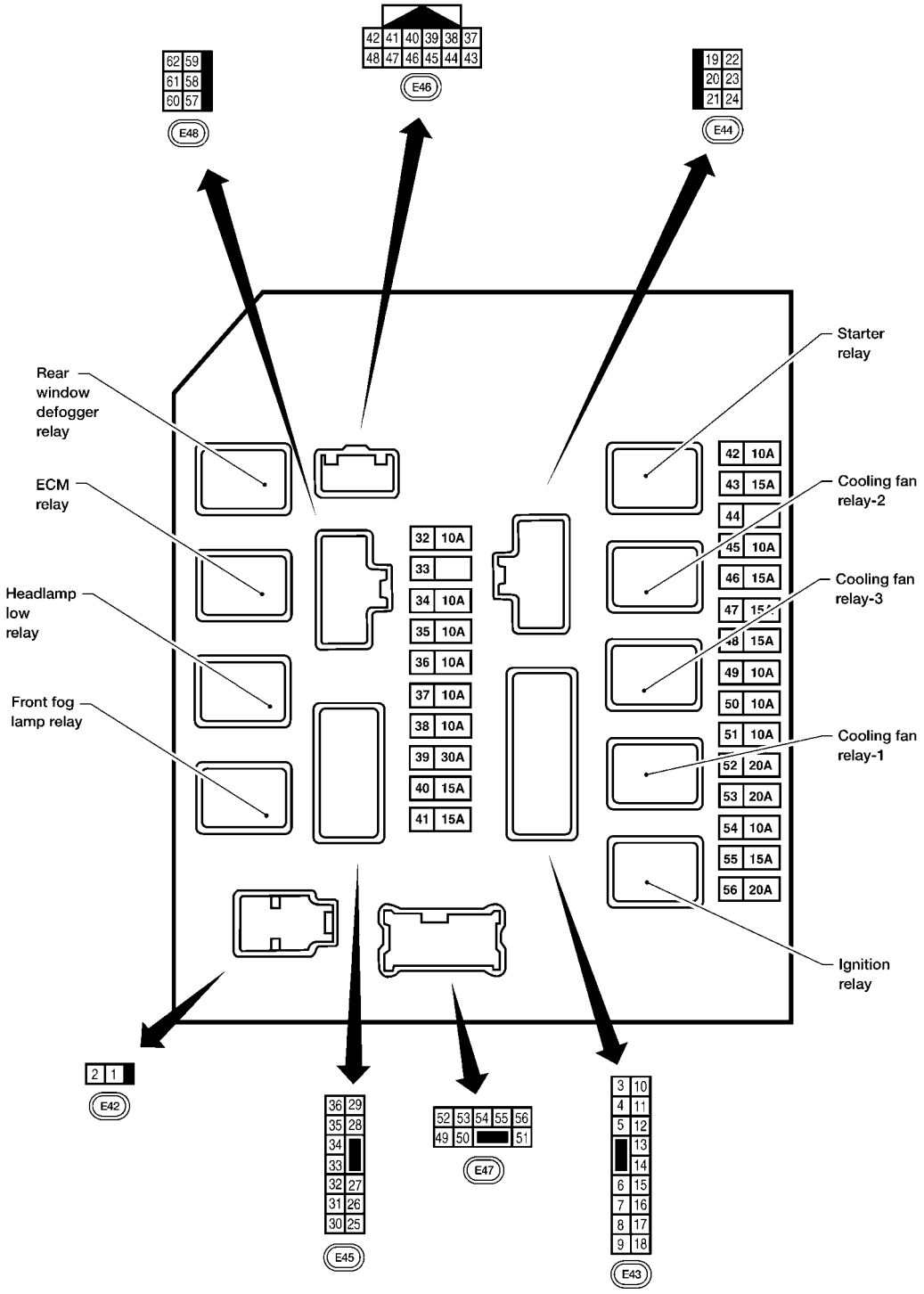

WKIA5666E

Terminal and Reference Value for IPDM E/R

INFOID:0000000001704703

Terminal	Wire color	Signal name	Signal input/ output	Measuring condition		Reference value (Approx.)
				Ignition switch	Operation or condition	
1	R	Battery power supply	Input	OFF	—	Battery voltage
2	G	Battery power supply	Input	OFF	—	Battery voltage
3	Y	ECM Relay	Output	—	Ignition switch ON or START	Battery voltage
					Ignition switch OFF or ACC	0V
4	G	ECM relay	Output	—	Ignition switch ON or START	Battery voltage
					Ignition switch OFF or ACC	0V
6	R	Daytime light relay control	Input	ON	Daytime light system active.	Less than battery voltage
					Daytime light system inactive.	Battery voltage
7	G	ECM relay control	Input	—	Ignition switch ON or START	0V
					Ignition switch OFF or ACC	Battery voltage
8	G	Throttle control motor relay	Output	—	Ignition switch ON or START	Battery voltage
					Ignition switch OFF or ACC	0V
11	W	A/C compressor	Output	ON or START	A/C switch ON or defrost A/C switch	Battery voltage
					A/C switch OFF or defrost A/C switch	0V
12	O	Ignition switch supplied power	Input	—	OFF or ACC	0V
					ON or START	Battery voltage
14	LG (M/T) R (A/T or CVT)	Fuse 49	Output	—	Ignition switch ON or START	Battery voltage
					Ignition switch OFF or ACC	0V
15	V	Fuse 50	Output	—	Ignition switch ON or START	Battery voltage
					Ignition switch OFF or ACC	0V
16	BR	Fuse 51	Output	—	Ignition switch ON or START	Battery voltage
					Ignition switch OFF or ACC	0V
17	Y	Battery power supply	Output	—	—	Battery voltage
19	R	Starter motor	Output	START	—	Battery voltage
20	L (with A/C) LG (without A/C)	Cooling fan relay-1	Output	—	Conditions correct for cooling fan low operation.	Battery voltage
					Conditions not correct for cooling fan low operation.	0V
22	G	Battery power supply	Input	—	—	Battery voltage
23	L	Cooling fan relay-2	Input	—	Conditions correct for cooling fan high operation	Battery voltage
					Conditions not correct for cooling fan high operation	0V

Terminal	Wire color	Signal name	Signal input/ output	Measuring condition			Reference value (Approx.)
				Ignition switch	Operation or condition		
24	Y	Cooling fan relay-3	Output	—	Conditions correct for cooling fan high operation		Battery voltage
					Conditions not correct for cooling fan high operation		0V
26	O	Tail lamp relay (parking lamps)	Output	—	Lighting switch in 2nd position		Battery voltage
27	BR	Tail lamp relay (parking lamps)	Output	—	Lighting switch in 2nd position		Battery voltage
28	GR	Tail lamp relay (parking lamps)	Output	—	Lighting switch in 2nd position		Battery voltage
29	P	Tail lamp relay (parking lamps)	Output	—	Lighting switch in 2nd position		Battery voltage
30 (A/T only)	R	Fuse 54	Output	—	Ignition switch ON or START		Battery voltage
					Ignition switch OFF or ACC		0V
31	O	Fuse 55	Output	—	Ignition switch ON or START		Battery voltage
					Ignition switch OFF or ACC		0V
32	L	Wiper high speed signal	Output	ON or START	Wiper switch	OFF, LO, INT	0V
						HI	Battery voltage
33	Y	Wiper low speed signal	Output	ON or START	Wiper switch	OFF	0V
						LO or INT	Battery voltage
35	BR	Starter relay (inhibit switch)	Input	ON or START	Selector lever in "P" or "N" (CVT or A/T) or clutch pedal depressed (M/T)		Battery voltage
					Selector lever any other position (CVT or A/T) or clutch pedal released (M/T)		0V
36	BR	Fuel pump relay	Output	—	Ignition switch ON or START		Battery voltage
					Ignition switch OFF or ACC		0V
37	G	Oil pressure switch	Input	ON or START	Engine running and oil pressure within specification		Battery voltage
					Engine not running or oil pressure below specification		0V
38	R	Wiper auto stop signal	Input	ON or START	Wipers not in park position		Battery voltage
					Wipers in park position		0V
39	B	Ground	Input	—	—		0V
40	P	CAN-L	—	ON	—		—
41	L	CAN-H	—	ON	—		—
45	R	Horn relay control	Input	—	Horn switch PUSHED, alarm switch activated or door lock/ unlock is confirmed when operating lock system via the keyfob		0V
					Horn switch released, alarm not active, keyfob not active		Battery voltage
46	Y	Throttle control motor relay control	Input	—	Ignition switch ON or START		0V
					Ignition switch OFF or ACC		Battery voltage
47	GR	Fuel pump relay control	Input	—	Ignition switch ON or START		0V
					Ignition switch OFF or ACC		Battery voltage

Terminal	Wire color	Signal name	Signal input/ output	Measuring condition			Reference value (Approx.)
				Ignition switch	Operation or condition		
50	V	Front fog lamp (LH)	Output	ON or START	Lighting switch must be in the 2ND position (LOW beam is ON) and the front fog lamp switch	OFF	0V
						ON	Battery voltage
51	W	Front fog lamp (RH)	Output	ON or START	Lighting switch must be in the 2ND position (LOW beam is ON) and the front fog lamp switch	OFF	0V
						ON	Battery voltage
52	L	LH Low beam head-lamp	Output	—	Lighting switch in 2nd position		Battery voltage
54	P	RH Low beam head-lamp	Output	—	Lighting switch in 2nd position		Battery voltage
55	G	LH High beam head-lamp	Output	—	Lighting switch in 2nd position and placed in HIGH or PASS position		Battery voltage
56	Y	RH High beam head-lamp	Output	—	Lighting switch in 2nd position and placed in HIGH or PASS position		Battery voltage
59	B	Ground	Input	—	—		0V
60	R	Rear window defogger relay	Output	ON or START	Rear defogger Switch ON		Battery voltage
					Rear defogger Switch OFF		0V

IPDM E/R Power/Ground Circuit Inspection

INFOID:0000000001704704

1. FUSE AND FUSIBLE LINK INSPECTION

Check that the following fusible links or IPDM E/R fuses are not blown.

Terminal No.	Signal name	Fuse, fusible link No.
1, 2	Battery power	a, b, d

OK or NG

OK >> GO TO 2.
NG >> Replace fuse or fusible link.

2. POWER CIRCUIT INSPECTION

1. Turn ignition switch OFF.
2. Disconnect IPDM E/R harness connector E42.
3. Check voltage between IPDM E/R harness connector E42 terminals 1, 2 and ground.

Battery voltage should exist.

OK or NG

OK >> GO TO 3.
NG >> Repair or replace IPDM E/R power circuit harness.

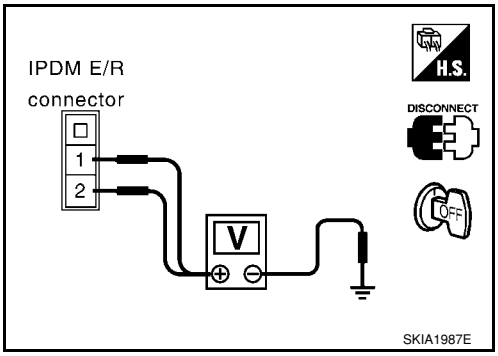

3. GROUND CIRCUIT INSPECTION

1. Disconnect IPDM E/R harness connectors E46 and E48.
2. Check continuity between IPDM E/R harness connector E46 (A) terminal 39, E48 (B) terminal 59 and ground.

Continuity should exist.

OK or NG

OK >> Inspection End.
NG >> Repair or replace IPDM E/R ground circuit harness.

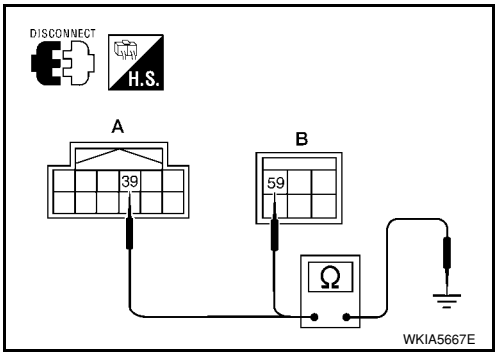

Inspection with CONSULT-III (Self-Diagnosis)

INFOID:0000000001704705

1. SELF-DIAGNOSIS RESULT CHECK

1. Connect CONSULT-III and select "IPDM E/R" on the "SELECT SYSTEM" screen.
2. Select "SELF-DIAG RESULTS" on the "SELECT DIAG MODE" screen.
3. Check display content in self-diagnosis results.

CONSULT-III Display	CONSULT-III display code	TIME		Details of diagnosis result
		CRNT	PAST	
NO DTC IS DETECTED. FURTHER TESTING MAY BE REQUIRED.	—	—	—	No malfunction
CAN COMM CIRC	U1000	X	X	Any of items listed below have errors: • TRANSMIT DIAG • ECM • BCM/SEC

NOTE:
The Details for Display for the Period are as follows:
- CRNT: Error currently detected by IPDM E/R.
- PAST: Error detected in the past and stored in IPDM E/R memory.

Contents displayed

NO DTC DETECTED. FURTHER TESTING MAY BE REQUIRED.>>Inspection End.
CAN COMM CIRC>>Print out the self-diagnosis result and refer to LAN-15, "Trouble Diagnosis Flow Chart".

Removal and Installation of IPDM E/R

INFOID:0000000001704706

⇦: Vehicle front

REMOVAL

1. Lift up the IPDM E/R while pushing and opening pawls (A) or (B), and remove the IPDM E/R while pushing and opening the other side pawls.
2. Disconnect harness connector.

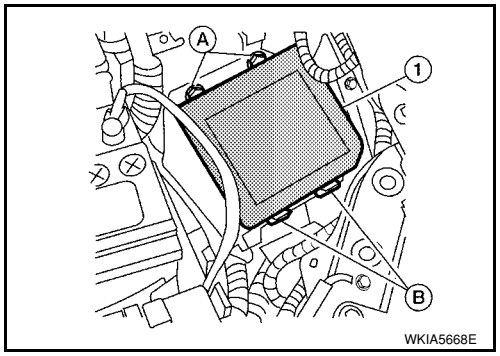

INSTALLATION

Installation is the reverse order of removal.

GROUND CIRCUIT

Ground Distribution

INFOID:0000000001704707

MAIN HARNESS

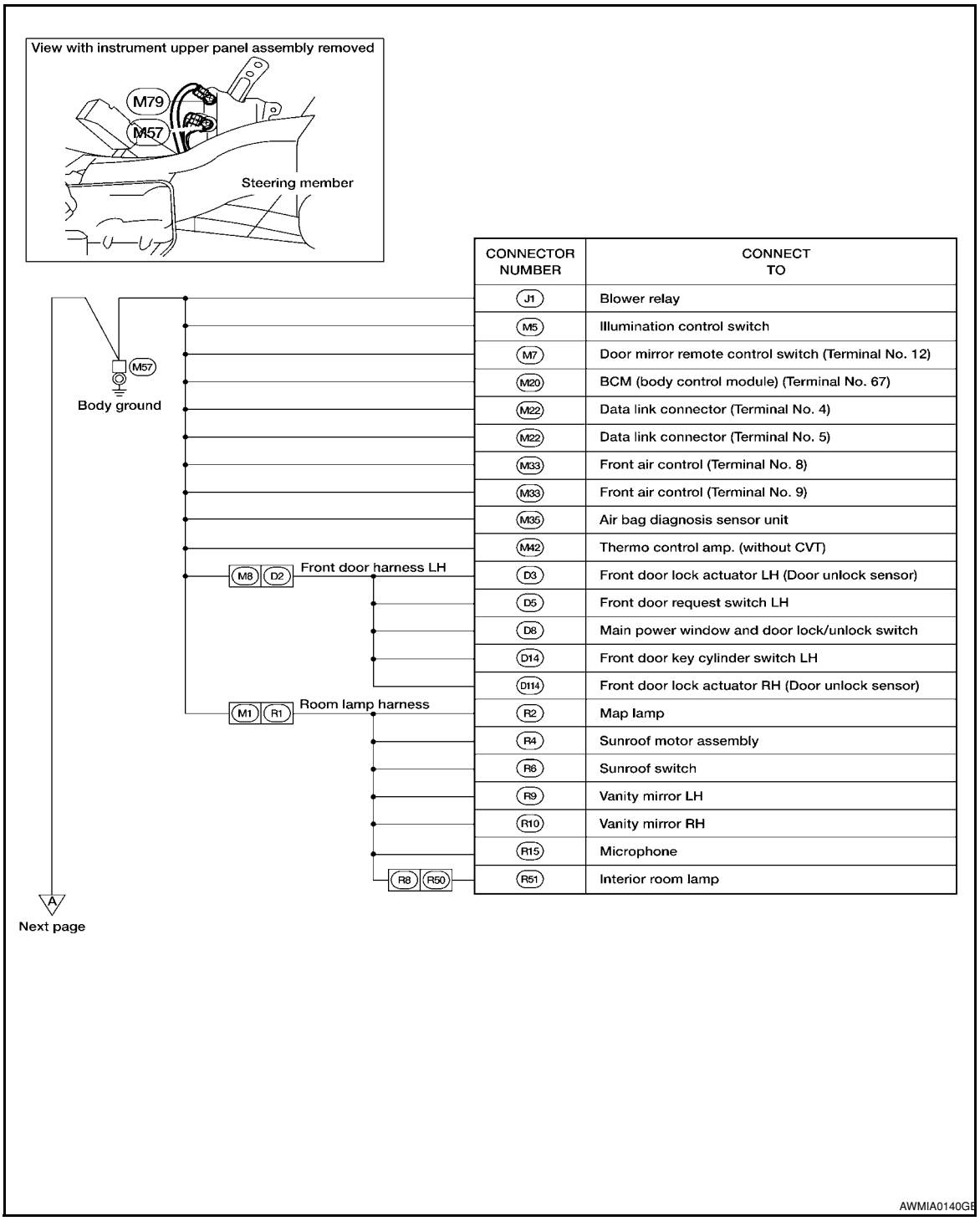

CONNECTOR NUMBER	CONNECT TO
J1	Blower relay
M5	Illumination control switch
M7	Door mirror remote control switch (Terminal No. 12)
M20	BCM (body control module) (Terminal No. 67)
M22	Data link connector (Terminal No. 4)
M22	Data link connector (Terminal No. 5)
M33	Front air control (Terminal No. 8)
M33	Front air control (Terminal No. 9)
M35	Air bag diagnosis sensor unit
M42	Thermo control amp. (without CVT)
D3	Front door lock actuator LH (Door unlock sensor)
D5	Front door request switch LH
D8	Main power window and door lock/unlock switch
D14	Front door key cylinder switch LH
D114	Front door lock actuator RH (Door unlock sensor)
R2	Map lamp
R4	Sunroof motor assembly
R6	Sunroof switch
R9	Vanity mirror LH
R10	Vanity mirror RH
R15	Microphone
R51	Interior room lamp

CONNECTOR NUMBER	CONNECT TO
M10	Instrument panel antenna (shield) (with hatchback early production)
M36	Front passenger airbag OFF indicator
M38	A/T device (Terminal No. 2)
M38	A/T device (Terminal No. 6)
M38	CVT device (Park position switch)
M38	CVT device (Overdrive control switch) (Terminal No. 2)
M38	CVT device (Terminal No. 6)
M52	Intelligent key unit
M55	Hazard switch
M73	Key switch and ignition knob switch

AWMIA0119GB

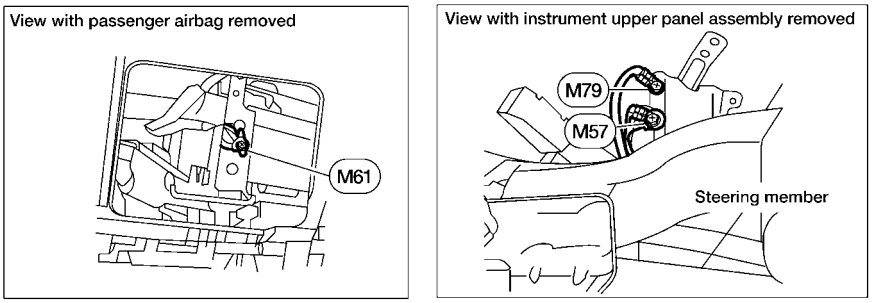

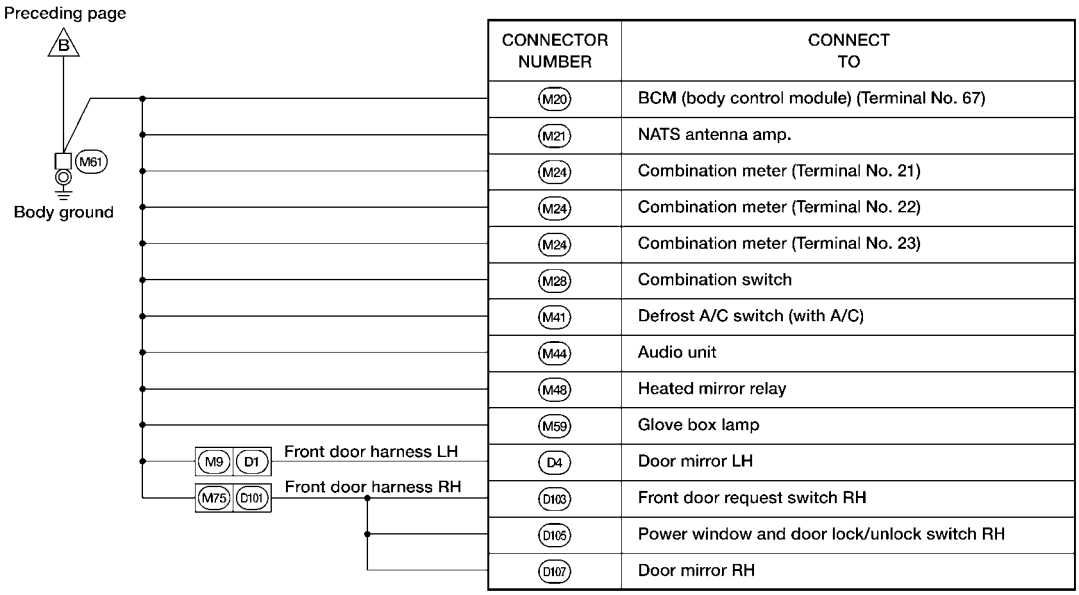

CONNECTOR NUMBER	CONNECT TO
M20	BCM (body control module) (Terminal No. 67)
M21	NATS antenna amp.
M24	Combination meter (Terminal No. 21)
M24	Combination meter (Terminal No. 22)
M24	Combination meter (Terminal No. 23)
M28	Combination switch
M41	Defrost A/C switch (with A/C)
M44	Audio unit
M48	Heated mirror relay
M59	Glove box lamp
D4	Door mirror LH
D103	Front door request switch RH
D105	Power window and door lock/unlock switch RH
D107	Door mirror RH

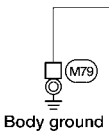

CONNECTOR NUMBER	CONNECT TO
M54	EPS control unit

AWMIA0141GB

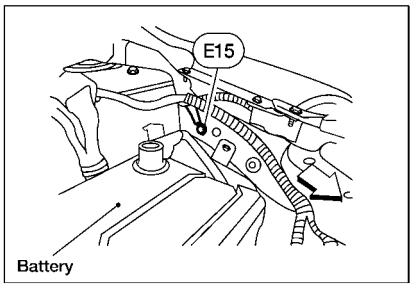

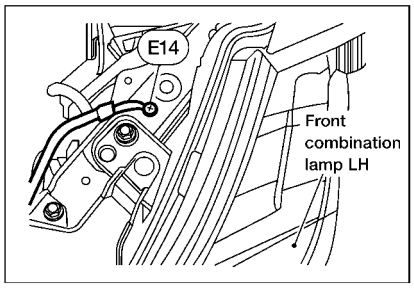

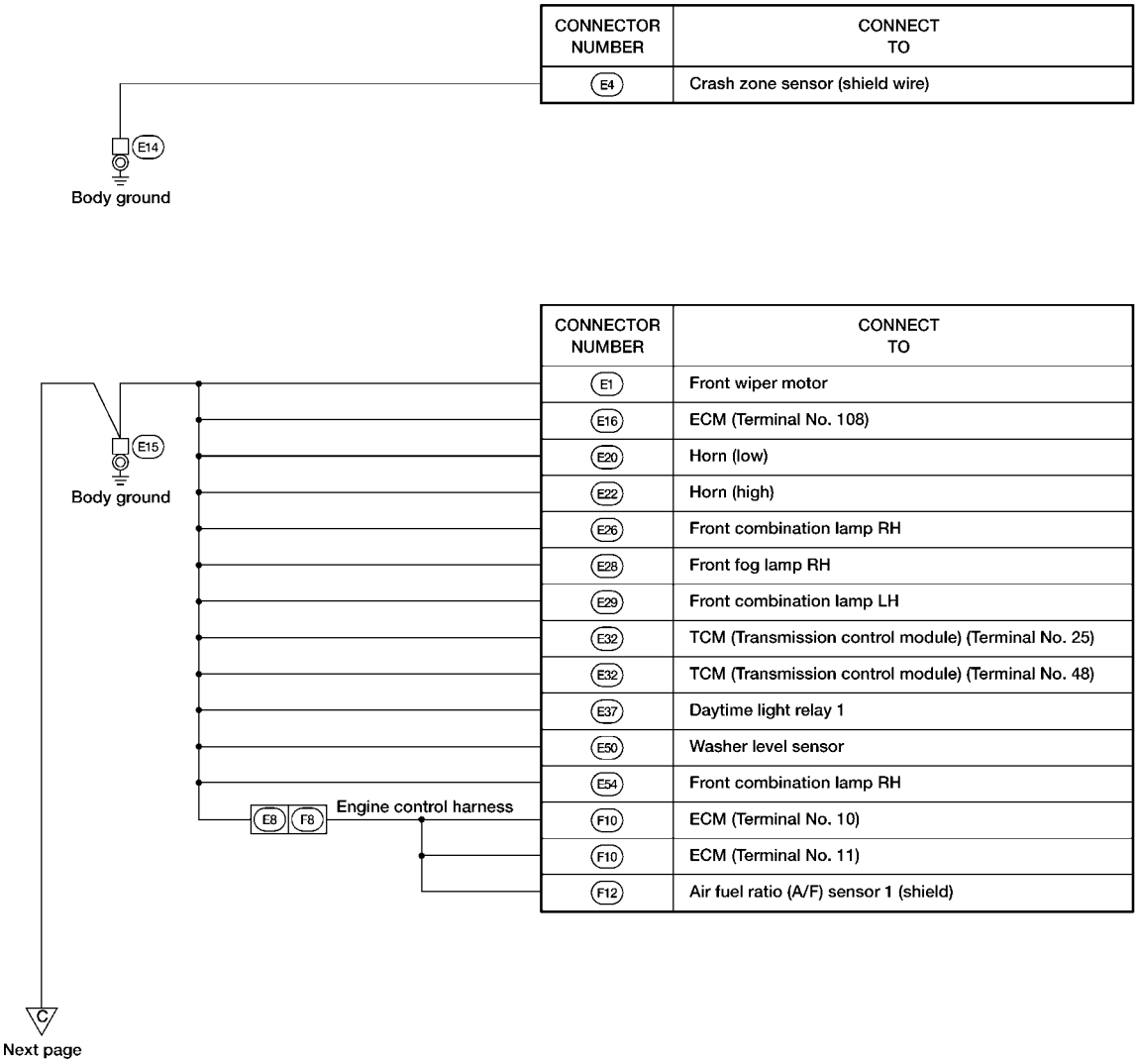

CONNECTOR NUMBER	CONNECT TO
E4	Crash zone sensor (shield wire)

CONNECTOR NUMBER	CONNECT TO
E1	Front wiper motor
E16	ECM (Terminal No. 108)
E20	Horn (low)
E22	Horn (high)
E26	Front combination lamp RH
E28	Front fog lamp RH
E29	Front combination lamp LH
E32	TCM (Transmission control module) (Terminal No. 25)
E32	TCM (Transmission control module) (Terminal No. 48)
E37	Daytime light relay 1
E50	Washer level sensor
E54	Front combination lamp RH
F10	ECM (Terminal No. 10)
F10	ECM (Terminal No. 11)
F12	Air fuel ratio (A/F) sensor 1 (shield)

WKIA5992E

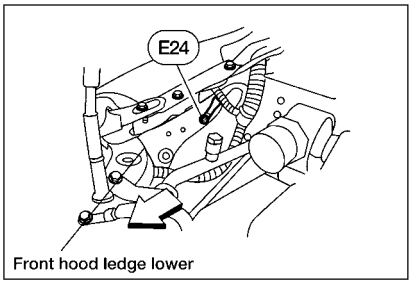

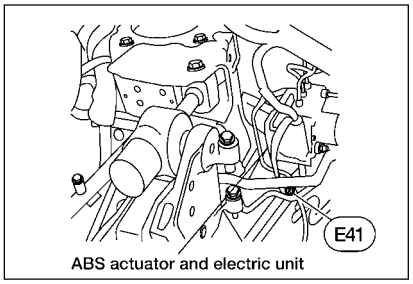

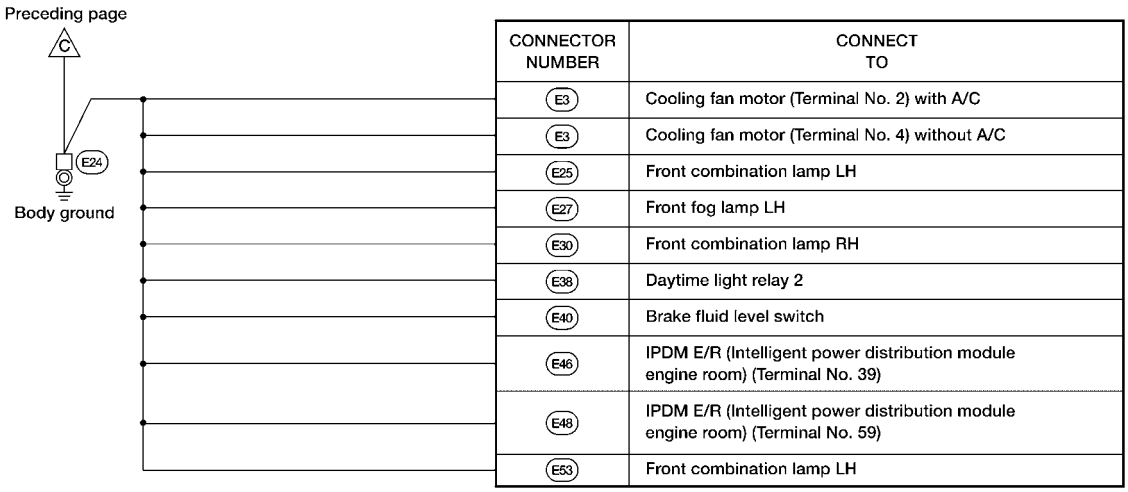

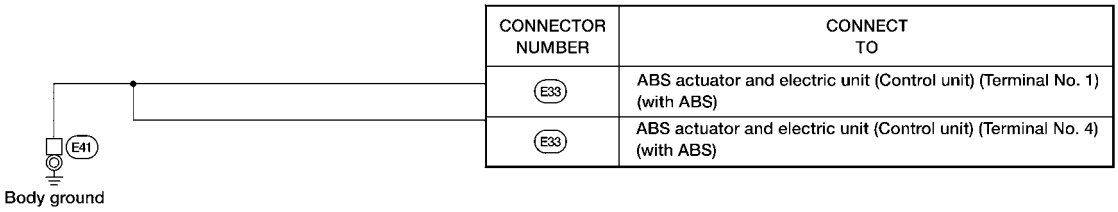

AWMIA0142GB

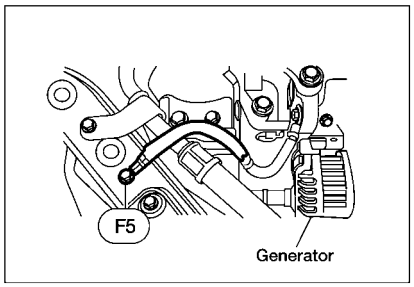

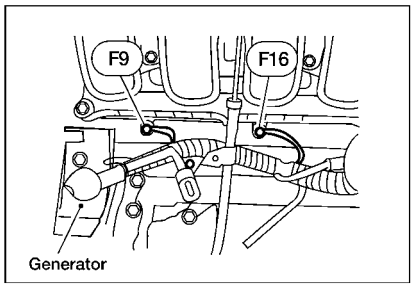

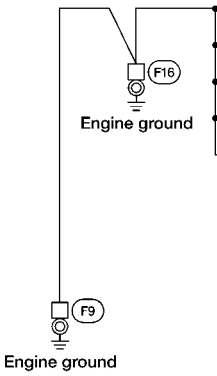

CONNECTOR NUMBER	CONNECT TO
F26	Condenser-2
F34	Ignition coil No. 1 (With power transistor)
F35	Ignition coil No. 2 (With power transistor)
F36	Ignition coil No. 3 (With power transistor)
F37	Ignition coil No. 4 (With power transistor)

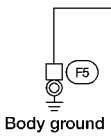

CONNECTOR NUMBER	CONNECT TO
F4	Generator

WKIA5648E

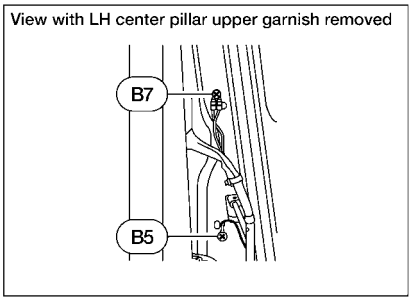

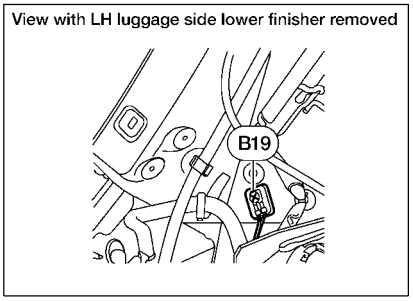

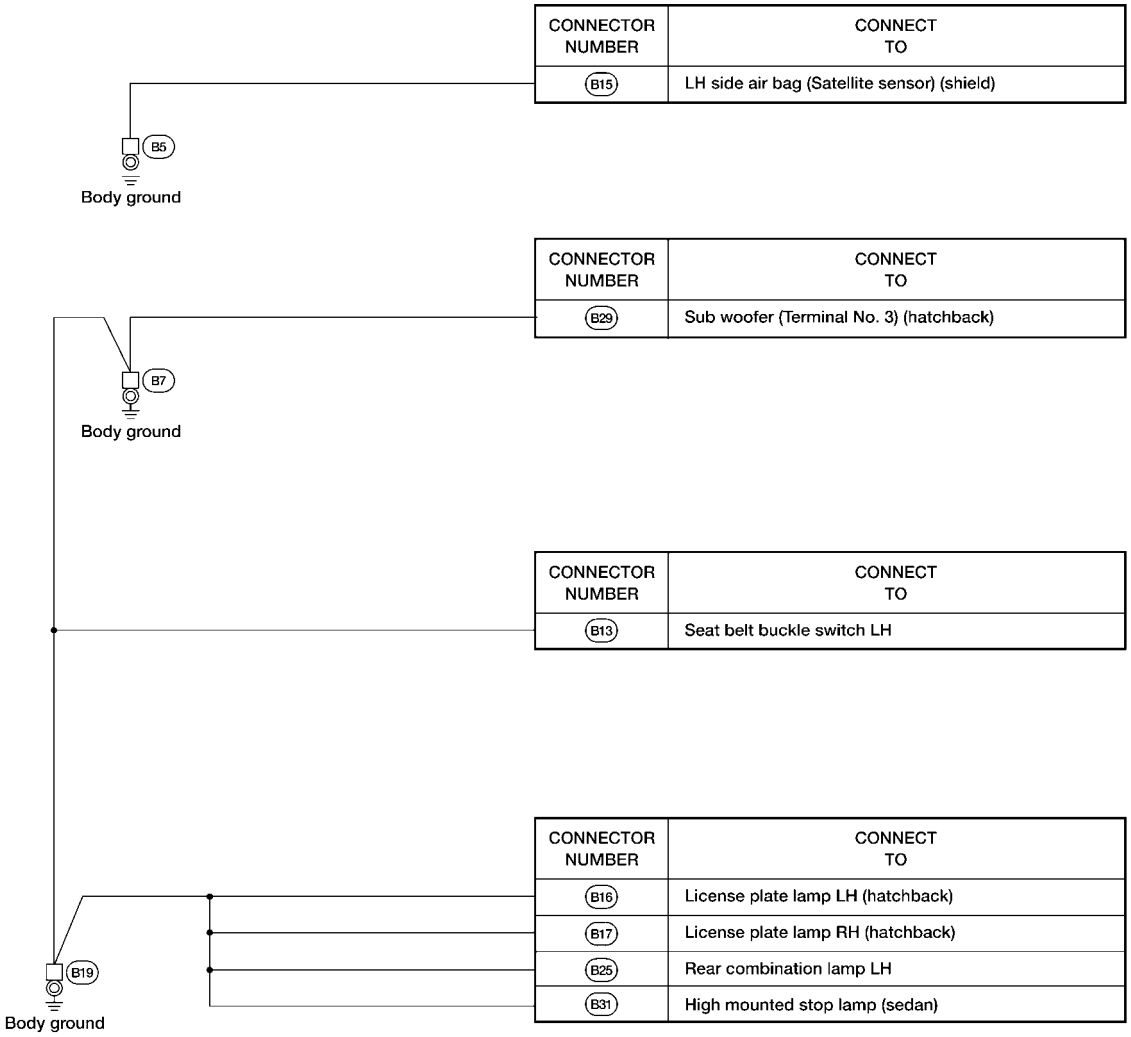

CONNECTOR NUMBER	CONNECT TO
B15	LH side air bag (Satellite sensor) (shield)

CONNECTOR NUMBER	CONNECT TO
B29	Sub woofer (Terminal No. 3) (hatchback)

CONNECTOR NUMBER	CONNECT TO
B13	Seat belt buckle switch LH

CONNECTOR NUMBER	CONNECT TO
B16	License plate lamp LH (hatchback)
B17	License plate lamp RH (hatchback)
B25	Rear combination lamp LH
B31	High mounted stop lamp (sedan)

AWMIA0120GB

BODY NO. 2 HARNESS

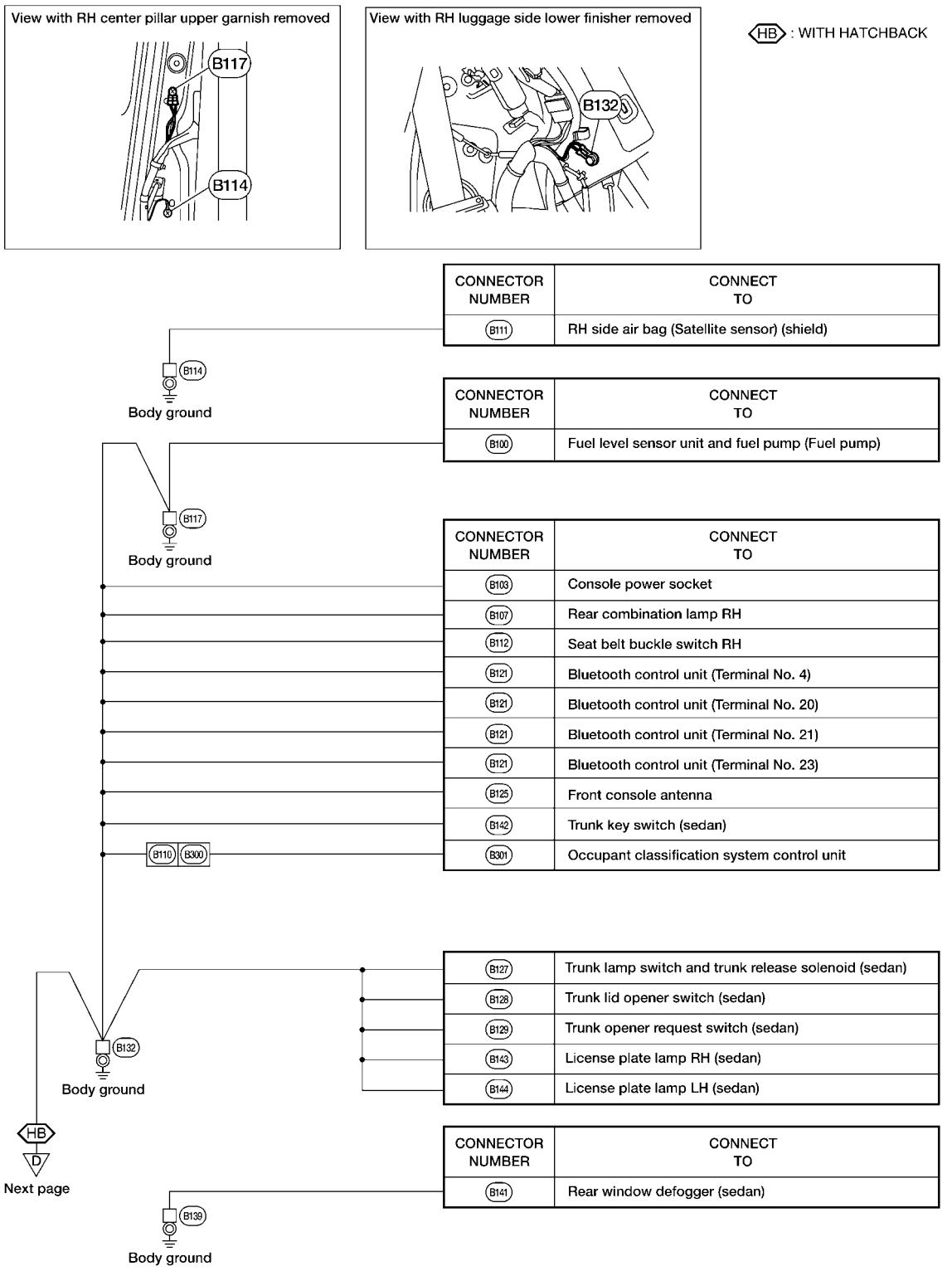

CONNECTOR NUMBER	CONNECT TO
B111	RH side air bag (Satellite sensor) (shield)

CONNECTOR NUMBER	CONNECT TO
B100	Fuel level sensor unit and fuel pump (Fuel pump)

CONNECTOR NUMBER	CONNECT TO
B103	Console power socket
B107	Rear combination lamp RH
B112	Seat belt buckle switch RH
B121	Bluetooth control unit (Terminal No. 4)
B121	Bluetooth control unit (Terminal No. 20)
B121	Bluetooth control unit (Terminal No. 21)
B121	Bluetooth control unit (Terminal No. 23)
B125	Front console antenna
B142	Trunk key switch (sedan)
B301	Occupant classification system control unit

B127	Trunk lamp switch and trunk release solenoid (sedan)
B128	Trunk lid opener switch (sedan)
B129	Trunk opener request switch (sedan)
B143	License plate lamp RH (sedan)
B144	License plate lamp LH (sedan)

CONNECTOR NUMBER	CONNECT TO
B141	Rear window defogger (sedan)

BACK DOOR HARNESS (HATCHBACK)

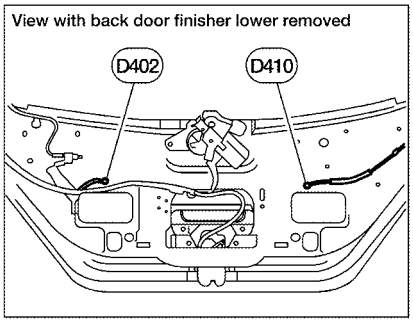

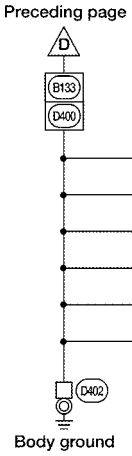

CONNECTOR NUMBER	CONNECT TO
D404	Rear wiper motor
D405	Back door lock assembly (Terminal No. 2)
D405	Back door lock assembly (Terminal No. 4)
D406	Back door request switch
D407	High-mounted stop lamp
D408	Back door opener switch

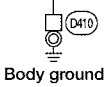

CONNECTOR NUMBER	CONNECT TO
D413	Rear window defogger (hatchback)

WKIA5995E

HARNESS

Harness Layout

INFOID:0000000001704708

HOW TO READ HARNESS LAYOUT

The following Harness Layouts use a map style grid to help locate connectors on the drawings:

- Main Harness
- Engine Room Harness (LH View)
- Engine Room Harness (RH View)
- Engine Control Harness
- Body Harness (Hatchback)
- Body Harness (Sedan)
- Body No. 2 Harness (Hatchback)
- Body No. 2 Harness (Sedan)
- Room Lamp Harness
- Back Door Harness (Hatchback Only)

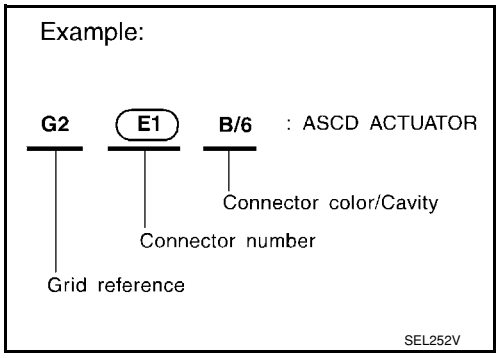

To use the grid reference

1. Find the desired connector number on the connector list.
2. Find the grid reference.
3. On the drawing, find the crossing of the grid reference letter column and number row.
4. Find the connector number in the crossing zone.
5. Follow the line to the connector.

OUTLINE

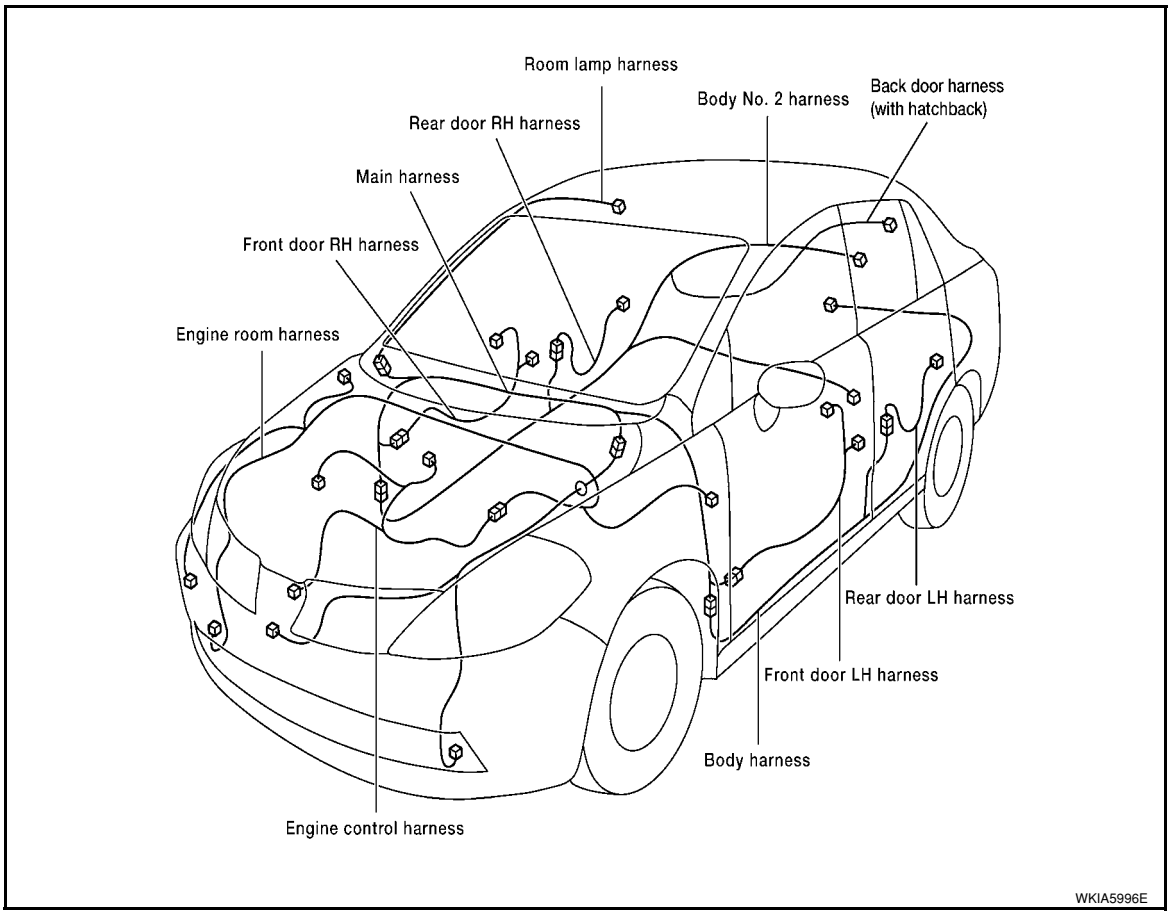

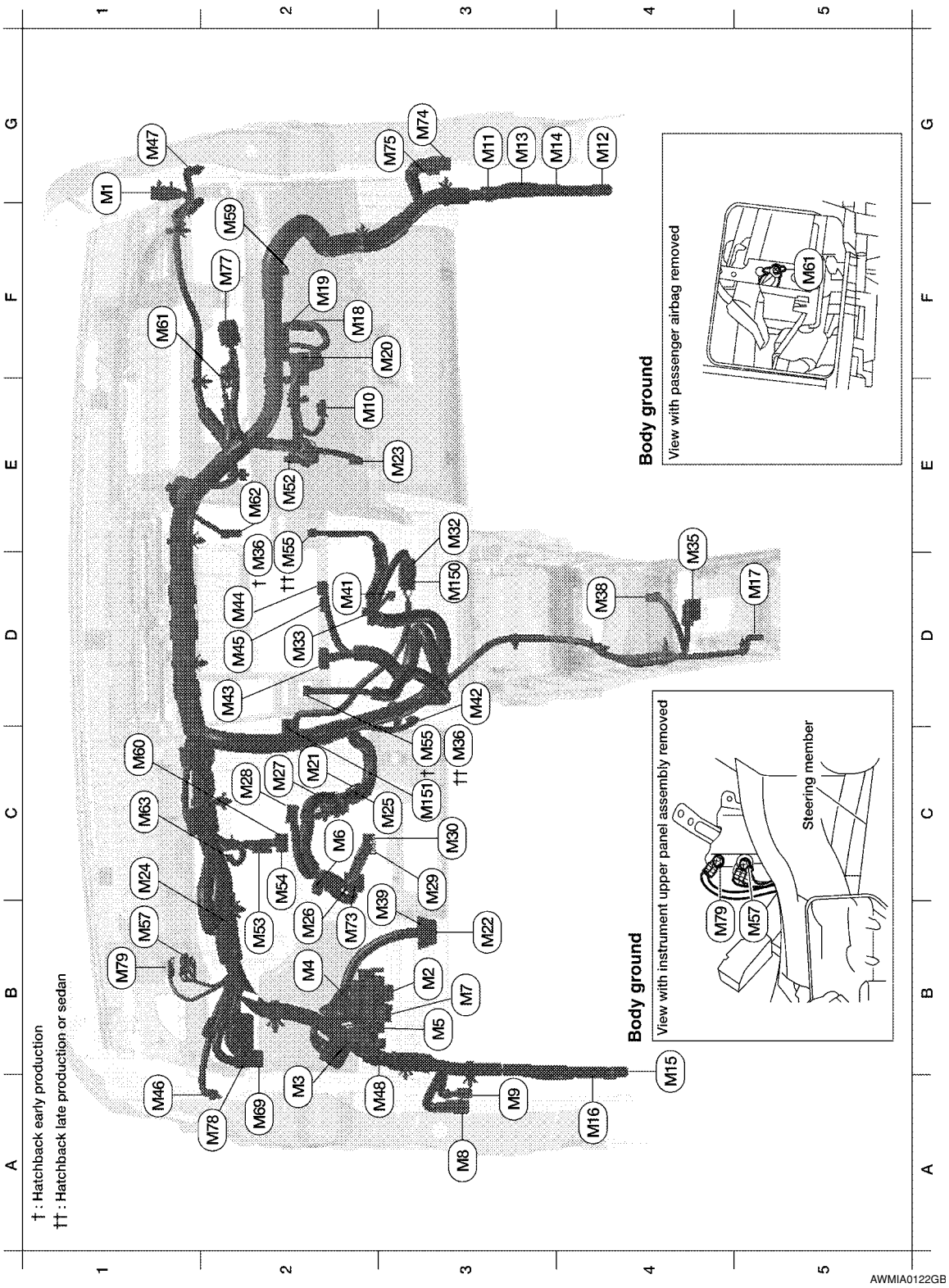

G1	M1	W/16	: To R1	D2	M44	W/16	: Audio unit
B3	M2	B/5	: Passenger select unlock relay	D2	M45	W/12	: Audio unit
B2	M3	W/1	: Fuse block (J/B)	A1	M46	BR/2	: Front tweeter LH
B3	M4	W/1	: Fuse block (J/B)	G1	M47	BR/2	: Front tweeter RH
B3	M5	W/3	: Illumination control switch	B2	M48	L/4	: Heated mirror relay

C2	M6	W/4	: Steering lock solenoid	E2	M52	W/40	: Intelligent key unit
B3	M7	W/16	: Door mirror remote control switch	B2	M53	W/16	: EPS control unit
A3	M8	W/16	: To D2	B3	M54	B/2	: EPS control unit
A3	M9	W/16	: To D1	C3	M55†	W/4	: Hazard switch (hatchback early production)
E2	M10	GR/2	: Instrument panel antenna	D2	M55††	W/4	: Hazard switch (hatchback late production or sedan)
G3	M11	W/4	: To B106	B2	M57	—	: Body ground
G4	M12	W/16	: To B101	F2	M59	W/2	: Glove box lamp
G3	M13	W/24	: To B102	C1	M60	L/2	: EPS control unit
G3	M14	W/24	: To B120	F1	M61	—	: Body ground
B4	M15	W/16	: To B23	E2	M62	W/2	: Front blower motor
B4	M16	W/24	: To B24	C1	M63	W/4	: Torque sensor
D5	M17	B/1	: Parking brake switch	A2	M69	SMJ	: To E7
F2	M18	W/40	: BCM (body control module)	B2	M73	GR/6	: Key switch and ignition knob switch (With intelligent key)
F2	M19	W/15	: BCM (body control module)	G3	M74	W/12	: To D102
F3	M20	B/15	: BCM (body control module)	G3	M75	W/12	: To D101
C2	M21	W/4	: NATS antenna amp.	F2	M77	Y/4	: Front passenger air bag module
B3	M22	W/16	: Data link connector	A2	M78	B/2	: To E11
E3	M23	W/4	: Remote keyless entry receiver	B1	M79	—	: Body ground
C1	M24	W/40	: Combination meter	D3	M150	W/4	: To M32
C3	M25	/2	: Diode-1	C3	M151	W/4	: Front blower motor resistor
B2	M26	W/6	: Ignition switch				
C2	M27	GR/6	: Key switch and key lock solenoid				
C2	M28	W/16	: Combination switch				
C3	M29	Y/6	: Combination switch (spiral cable)				
C3	M30	GR/8	: Combination switch (spiral cable)				
E3	M32	W/4	: To M150				
D2	M33	B/15	: Front air control				
D4	M35	Y/28	: Air bag diagnosis sensor unit				
D2	M36†	W/3	: Front passenger air bag OFF indicator (hatchback early production)				
C3	M36††	W/3	: Front passenger air bag OFF indicator (hatchback late production or sedan)				
D4	M38	W/6	: A/T device				
D4	M38	W/6	: CVT device (without intelligent key)				
D4	M38	W/8	: CVT device (with intelligent key)				
B3	M39	W/2	: Tire pressure warning check connector				
D2	M41	W/2	: Defrost A/C switch				
D3	M42	W/3	: Thermo control amp. (without CVT)				
D2	M43	W/20	: Audio unit				

ENGINE ROOM HARNESS (LH VIEW)

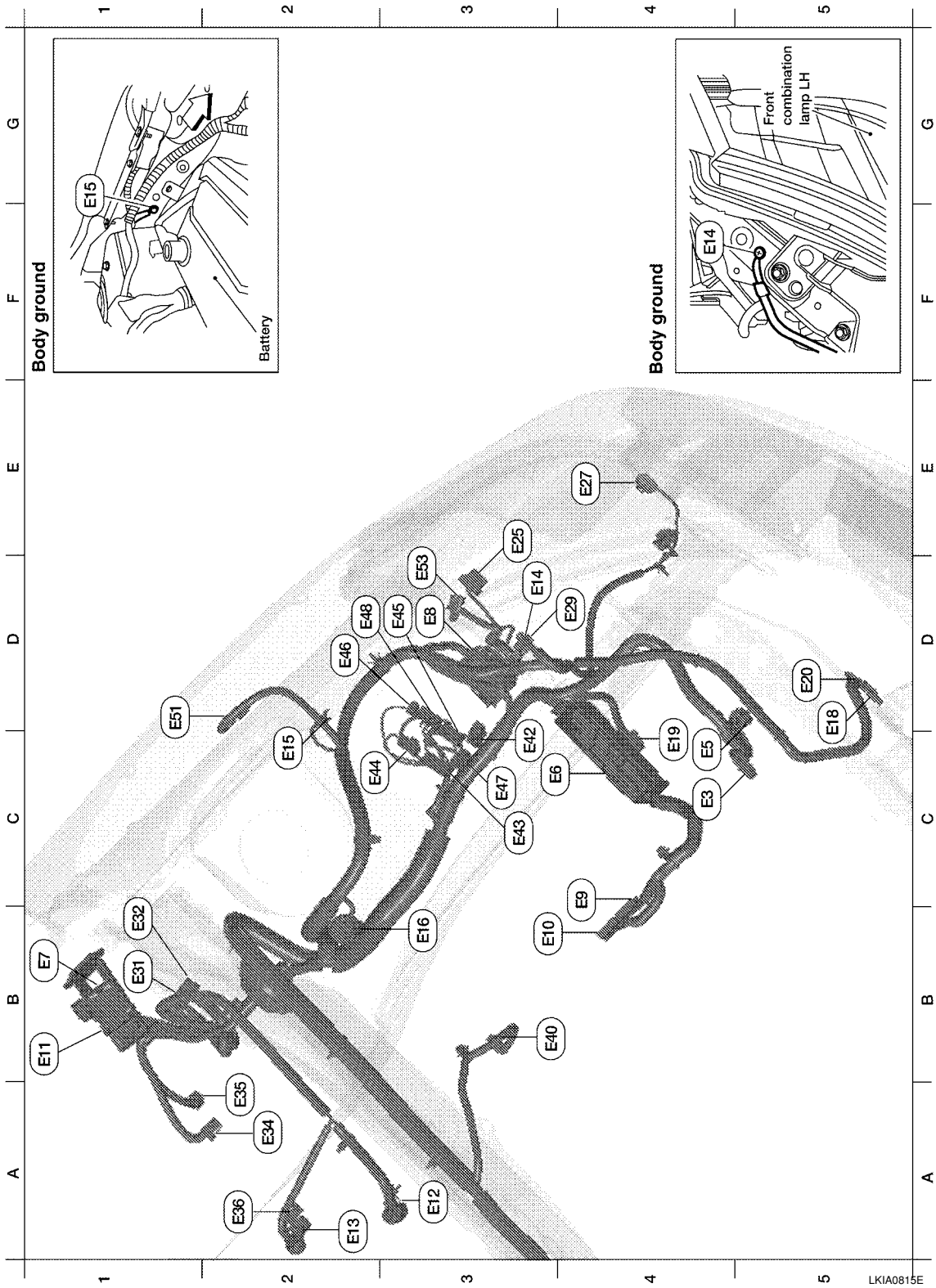

Refer to "ENGINE ROOM HARNESS (RH VIEW)" for continuation of engine room harness.

C4	E3	GR/4	: Cooling fan motor (without A/C)	C3	E47	BR/8	: IPDM E/R (Intelligent Power Distribution Module Engine Room)
C4	E3	B/2	: Cooling fan motor (with A/C)	D3	E48	B/6	: IPDM E/R (Intelligent Power Distribution Module Engine Room)
C4	E5	GR/3	: Resistor	D1	E51	B/2	: Front wheel sensor LH

C3	E6	—	: Fuse and fusible link box	D3	E53	B/2	: Front combination lamp LH (parking)
B1	E7	SMJ	: To M69				
D3	E8	SMJ	: To F8				
B4	E9	BR/2	: Fusible link box (battery)				
B3	E10	GR/2	: Fusible link box (battery)				
B1	E11	B/2	: To M78				
A3	E12	B/6	: Accelerator pedal position sensor				
A2	E13	B/2	: Stop lamp switch (with M/T)				
A2	E13	W/4	: Stop lamp switch (without M/T)				
D3	E14	—	: Engine ground (crash zone sensor)				
C2	E15	—	: Engine ground				
B2	E16	B/32	: ECM				
C5	E18	B/1	: Horn (low)				
C4	E19	GR/6	: To F33				
D5	E20	B/1	: Horn (low)				
D3	E25	B/3	: Front combination lamp LH (headlamp)				
E4	E27	B/2	: Front fog lamp LH				
D4	E29	B/2	: Front combination lamp LH (turn signal)				
B1	E31	W/24	: TCM				
B1	E32	GR/24	: TCM				
A2	E34	BR/2	: Clutch interlock switch (with M/T)				
A2	E35	BR/2	: ASCD clutch switch				
A2	E36	BR/2	: ASCD brake switch				
B4	E40	GR/2	: Brake fluid level switch				
D3	E42	B/2	: IPDM E/R (Intelligent Power Distribution Module Engine Room)				
C3	E43	W/16	: IPDM E/R (Intelligent Power Distribution Module Engine Room)				
C3	E44	W/6	: IPDM E/R (Intelligent Power Distribution Module Engine Room)				
D3	E45	BR/12	: IPDM E/R (Intelligent Power Distribution Module Engine Room)				
D3	E46	W/12	: IPDM E/R (Intelligent Power Distribution Module Engine Room)				

ENGINE ROOM HARNESS (RH VIEW)

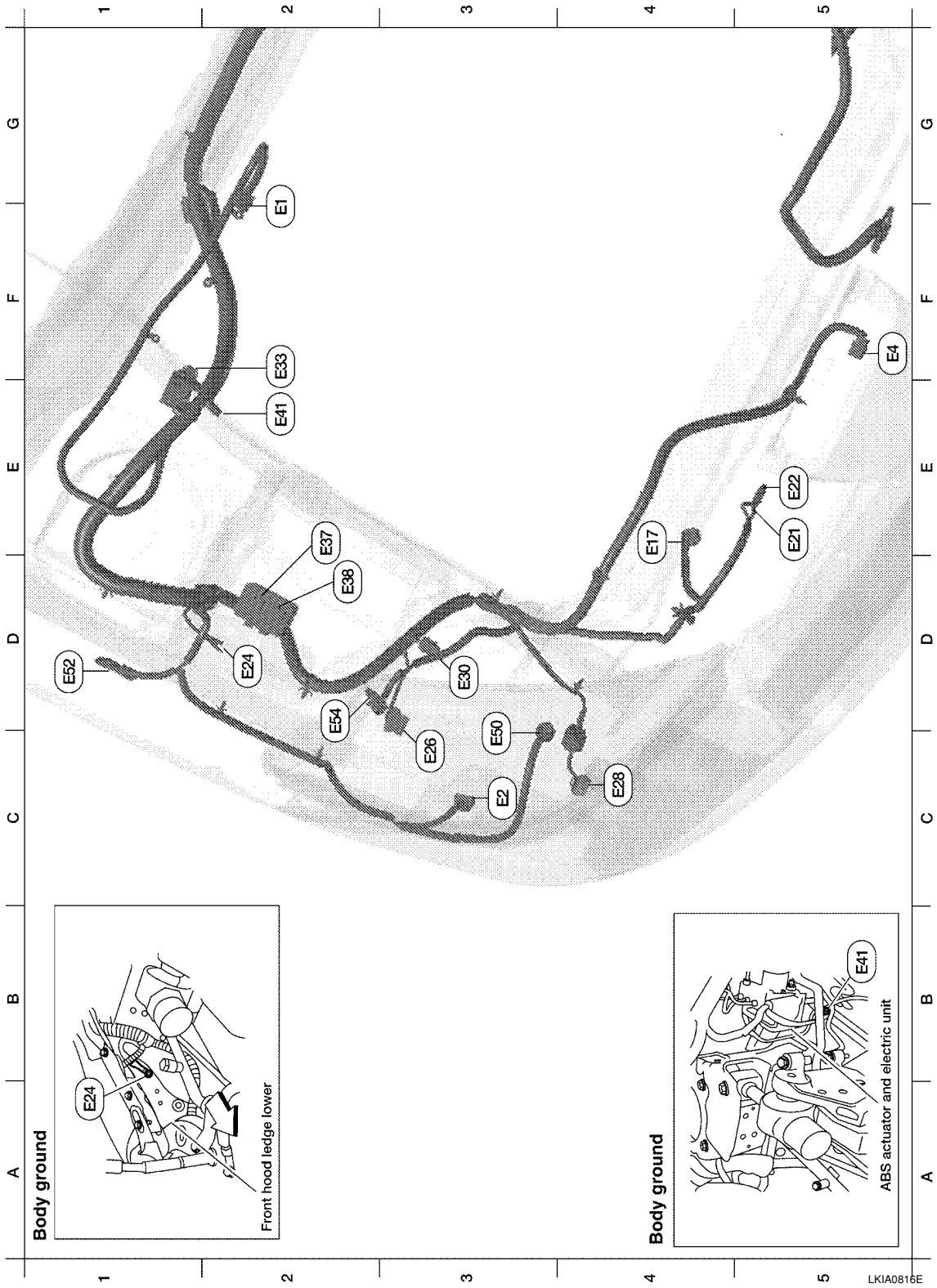

Refer to "ENGINE ROOM HARNESS (LH VIEW)" for continuation of engine room harness.

G2	E1	GR/5	: Front wiper motor	D3	E30	B/2	: Front combination lamp RH (turn signal)
C3	E2	B/2	: Front and rear washer motor	F2	E33	B/26	: ABS actuator and electric unit (control unit)
F5	E4	Y/2	: Crash zone sensor	E2	E37	B/5	: Daytime light relay 1

E4	E17	B/3	: Refrigerant pressure sensor	D2	E38	L/5	: Daytime light relay 2
E5	E21	B/1	: Horn (high)	E2	E41	—	: Ground (ABS)
E5	E22	B/1	: Horn (high)	C3	E50	W/2	: Washer fluid level switch
D2	E24	—	: Engine ground	D1	E52	B/2	: Front wheel sensor RH
C3	E26	B/3	: Front combination lamp RH (headlamp)	D2	E54	B/2	: Front combination lamp RH (parking)
C4	E28	B/2	: Front fog lamp RH				

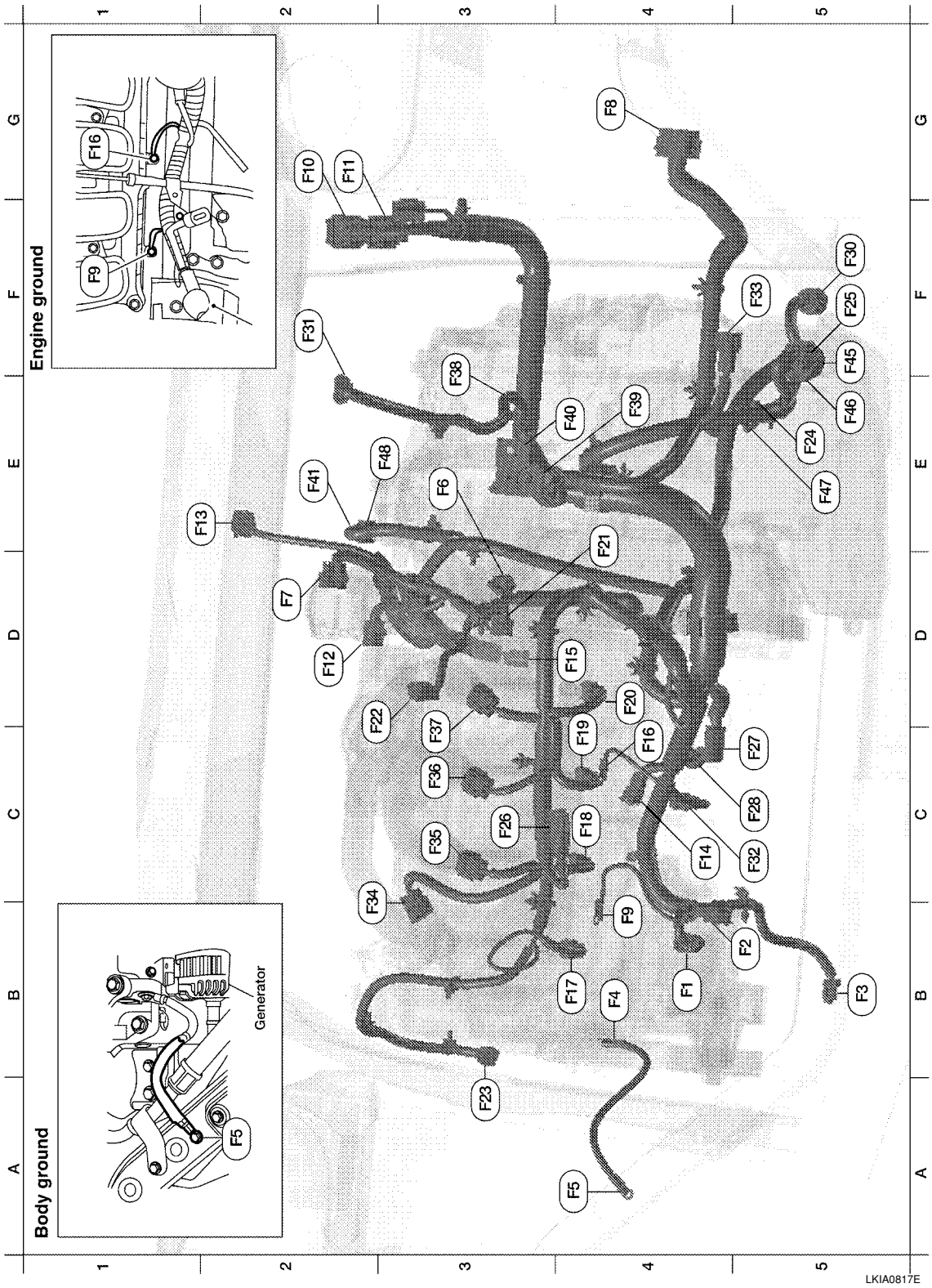

B4	F1	B/3	: Generator	E4	F39	—	: Fusible link box (battery)
B5	F2	—	: Generator	E4	F40	—	: Fusible link box (battery)
B5	F3	B/1	: A/C compressor	E2	F41	GR/2	: Vehicle speed sensor
B4	F4	—	: Generator	F5	F45	GR/3	: Turbine revolution sensor
A4	F5	—	: Generator ground	E5	F46	GR/22	: CVT unit

E3	F6	GR/2	: Engine coolant temperature sensor	E5	F47	B/3	: Powertrain revolution sensor (with A/T)
D2	F7	B/6	: Electric throttle control actuator	E3	F48	B/3	: Secondary speed sensor (with M/T)
G4	F8	SMJ	: To E8				
B4	F9	—	: Engine ground				
G2	F10	GR/32	: ECM				
G2	F11	BR/48	: ECM				
D3	F12	GR/4	: Air fuel ratio (A/F) sensor 1				
E2	F13	B/4	: Heated oxygen sensor 2				
C4	F14	B/2	: Knock sensor				
D3	F15	B/3	: Crankshaft position sensor (POS)				
C4	F16	—	: Engine ground				
B4	F17	GR/2	: Fuel injector No. 1				
C4	F18	GR/2	: Fuel injector No. 2				
C4	F19	GR/2	: Fuel injector No. 3				
D4	F20	GR/2	: Fuel injector No. 4				
D4	F21	B/3	: Camshaft position sensor (PHASE)				
C3	F22	GR/2	: EVAP canister purge volume control solenoid valve				
B3	F23	GR/2	: Intake valve timing control solenoid valve				
E5	F24	G/3	: Park/neutral position (PNP) switch (with M/T)				
F5	F25	B/10	: Park/neutral position (PNP) switch (with A/T)				
C3	F26	W/2	: Condenser-2				
C5	F27	—	: Starter motor				
C5	F28	—	: Starter motor				
F5	F30	B/8	: Terminal cord assembly				
F2	F31	B/6	: Mass air flow sensor				
C5	F32	GR/1	: Oil pressure switch				
F5	F33	GR/6	: To E19				
C3	F34	GR/3	: Ignition coil No. 1 (with power transistor)				
C3	F35	GR/3	: Ignition coil No. 2 (with power transistor)				
C3	F36	GR/3	: Ignition coil No. 3 (with power transistor)				
C3	F37	GR/3	: Ignition coil No. 4 (with power transistor)				
E5	F38	BR/3	: Revolution sensor				

BODY HARNESS (HATCHBACK)

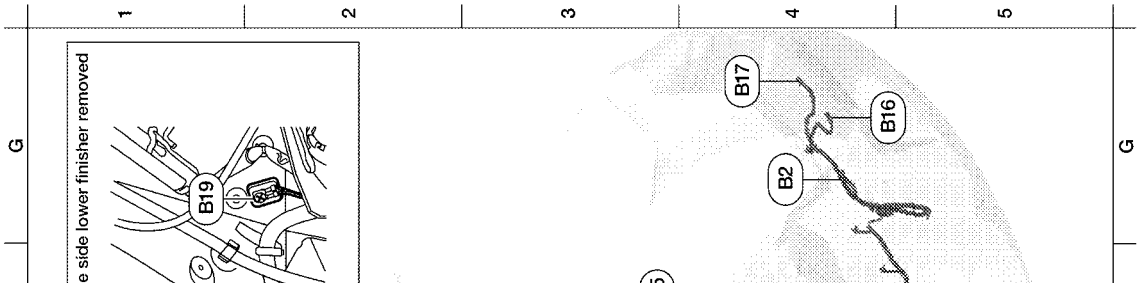

G4	B2	GR/2	: Rear bumper antenna				
C4	B4	W/8	: To D201				
C4	B5	—	: Body ground				
E4	B6	W/1	: Rear door switch LH				
C4	B7	—	: Body ground				
C4	B8	W/3	: Front door switch LH				
C4	B9	Y/12	: Air bag diagnosis sensor unit				
C4	B10	Y/2	: Front LH side air bag module				
F3	B13	W/3	: Seat belt buckle switch LH				
C4	B14	Y/2	: Front LH seat belt pre-tensioner				
C5	B15	Y/2	: LH side air bag (satellite) sensor				
G4	B16	BR/2	: License plate lamp LH				
G4	B17	BR/2	: License plate lamp RH				
F3	B19	—	: Body ground				
F3	B21	W/2	: Luggage room lamp				
A4	B23	W/16	: To M15				
A4	B24	W/24	: To M16				
F3	B25	BR/6	: Rear combination lamp LH				
F3	B26	Y/2	: LH side curtain air bag module				
F4	B29	W/6	: Subwoofer				
F4	B30	W/16	: Satellite radio tuner				

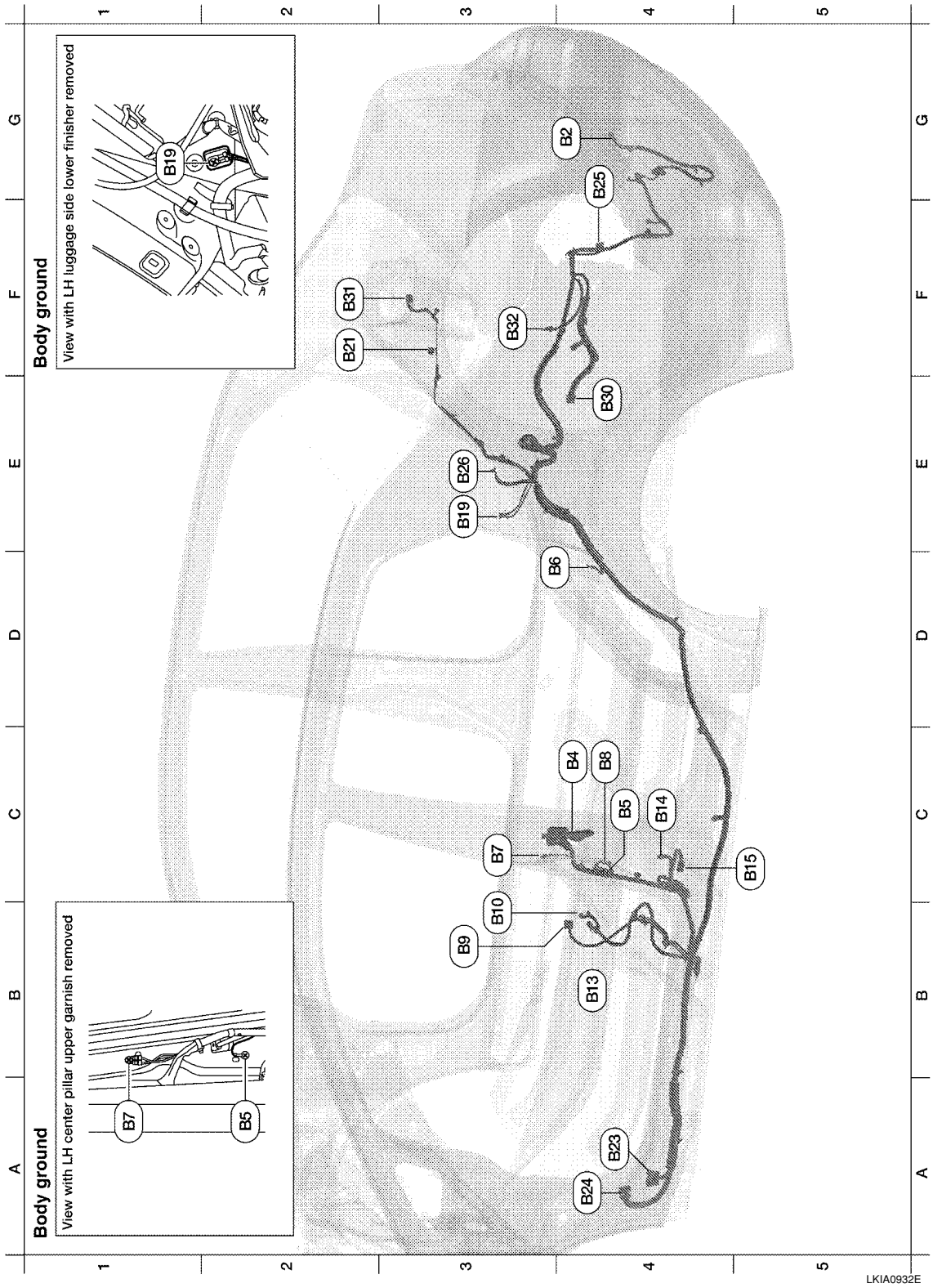

G4	B2	GR/2	: Rear bumper antenna				
C4	B4	W/8	: To D201				
C4	B5	—	: Body ground				
D3	B6	W/1	: Rear door switch LH				
C3	B7	—	: Body ground				

C4	B8	W/3	: Front door switch LH				
B3	B9	Y/12	: Air bag diagnosis sensor unit				
B3	B10	Y/2	: Front LH side air bag module				
B4	B13	W/3	: Seat belt buckle switch LH				
C4	B14	Y/2	: Front LH seat belt pre-tensioner				
C5	B15	Y/2	: LH side air bag (satellite) sensor				
E3	B19	—	: Body ground				
F2	B21	W/2	: Luggage room lamp				
A4	B23	W/16	: To M15				
A4	B24	W/24	: To M16				
G4	B25	BR/6	: Rear combination lamp LH				
E3	B26	Y/2	: LH side curtain air bag module				
E4	B30	W/16	: Satellite radio tuner				
F2	B31	W/2	: High mounted stop lamp				
F3	B32	BR/2	: Intelligent key warning buzzer (trunk)				

BODY NO. 2 HARNESS (HATCHBACK)

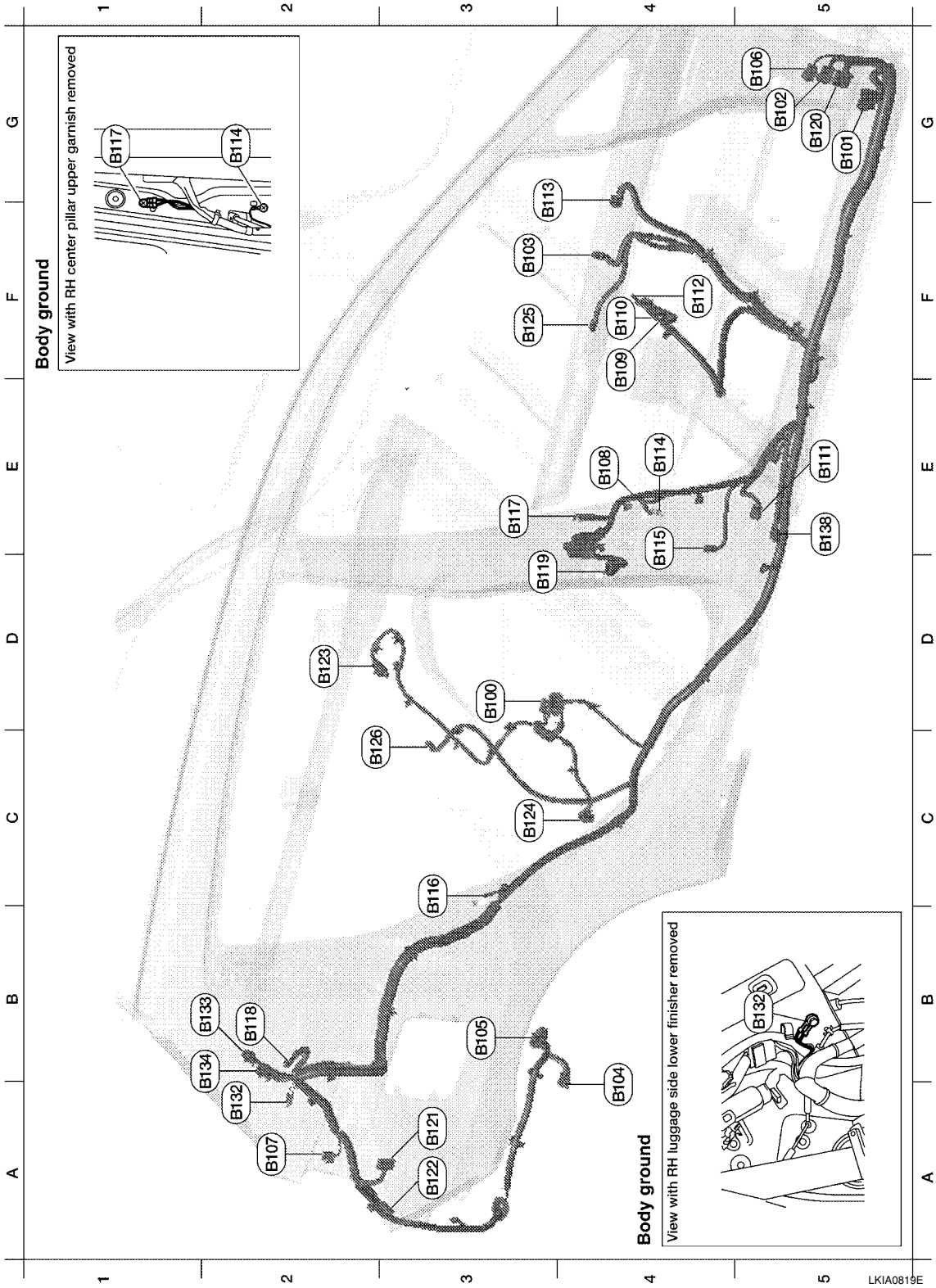

D3	B100	GR/5	: Fuel level sensor unit and fuel pump				
G5	B101	W/16	: To M12				
G5	B102	W/24	: To M13				
F3	B103	B/2	: Console power socket				
A4	B104	GR/3	: EVAP control system pressure sensor				

A3	B105	B/2	: EVAP canister vent control valve				
G5	B106	W/4	: To M11				
A2	B107	BR/6	: Rear combination lamp RH				
E4	B108	W/3	: Front door switch RH				
F4	B109	Y/2	: Front RH side air bag module				
F4	B110	W/10	: To B300				
E5	B111	Y/2	: RH side air bag (satellite) sensor				
F4	B112	W/3	: Seat belt buckle switch RH				
F3	B113	Y/12	: Air bag diagnosis sensor unit				
E4	B114	—	: Body ground				
E4	B115	Y/2	: Front RH seat belt pre-tensioner				
C3	B116	W/1	: Rear door switch RH				
E3	B117	—	: Body ground				
B2	B118	Y/2	: RH side curtain air bag module				
D3	B119	W/8	: To D301				
G5	B120	W/24	: To M14				
A3	B121	W/32	: Bluetooth control unit				
A3	B122	GR/1	: Bluetooth control unit				
D2	B123	B/2	: Rear wheel sensor LH				
C3	B124	B/2	: Rear wheel sensor RH				
F3	B125	GR/2	: Front console antenna				
C3	B126	GR/2	: Rear floor antenna				
A2	B132	—	: Body ground				
B2	B133	W/2	: To D400				
A2	B134	W/12	: To D401				
E5	B138	B/3	: Belt tension sensor				

BODY NO. 2 HARNESS (SEDAN)

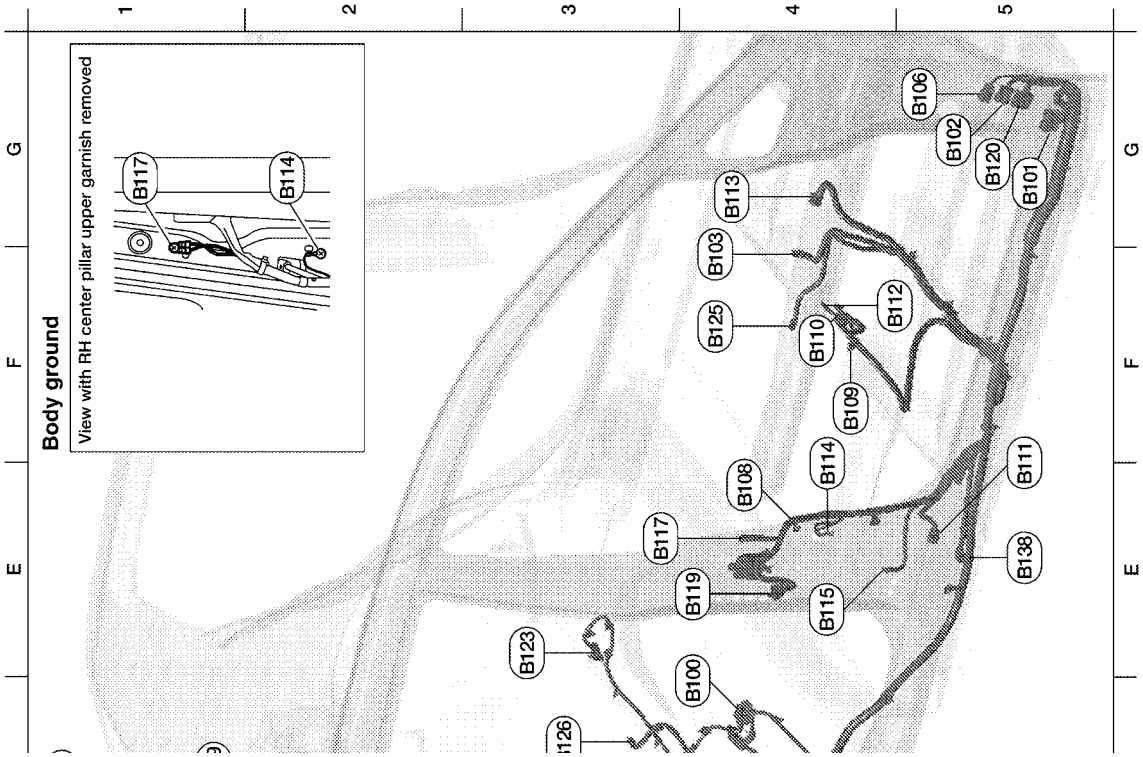

E3	B100	GR/5	: Fuel level sensor unit and fuel pump				
G5	B101	W/16	: To M12				
G5	B102	W/24	: To M13				
F4	B103	B/2	: Console power socket				
B4	B104	GR/3	: EVAP control system pressure sensor				
B3	B105	B/2	: EVAP canister vent control valve				
G5	B106	W/4	: To M11				
A2	B107	BR/6	: Rear combination lamp RH				
F4	B108	W/3	: Front door switch RH				
F4	B109	Y/2	: Front RH side air bag module				
F4	B110	W/10	: To B300				
E5	B111	Y/2	: RH side air bag (satellite) sensor				
F4	B112	W/3	: Seat belt buckle switch RH				
G3	B113	Y/12	: Air bag diagnosis sensor unit				
E4	B114	—	: Body ground				
E4	B115	Y/2	: Front RH seat belt pre-tensioner				
C3	B116	W/1	: Rear door switch RH				
E3	B117	—	: Body ground				
C2	B118	Y/2	: RH side curtain air bag module				
E4	B119	W/8	: To D301				
G5	B120	W/24	: To M14				
C3	B121	W/32	: Bluetooth control unit				
B3	B122	GR/1	: Bluetooth control unit				
E3	B123	B/2	: Rear wheel sensor LH				
D4	B124	B/2	: Rear wheel sensor RH				
F4	B125	GR/2	: Front console antenna				
D3	B126	GR/2	: Rear floor antenna				
B2	B127	W/3	: Trunk lamp switch and trunk release solenoid				
B1	B128	BR/2	: Trunk lid opener switch				
B1	B129	GR/2	: Trunk opener request switch				
C2	B130	B/1	: Condenser-1				
C2	B131	B/1	: Condenser-1				
C3	B132	—	: Body ground				
E5	B138	B/3	: Belt tension sensor				
D1	B139	—	: Body ground				
C2	B140	B/1	: Rear window defogger (+)				
D1	B141	B/1	: Rear window defogger (-)				
B2	B142	W/3	: Trunk key cylinder switch				
B1	B143	BR/2	: License plate lamp RH				
B2	B144	BR/2	: License plate lamp LH				

ROOM LAMP HARNESS

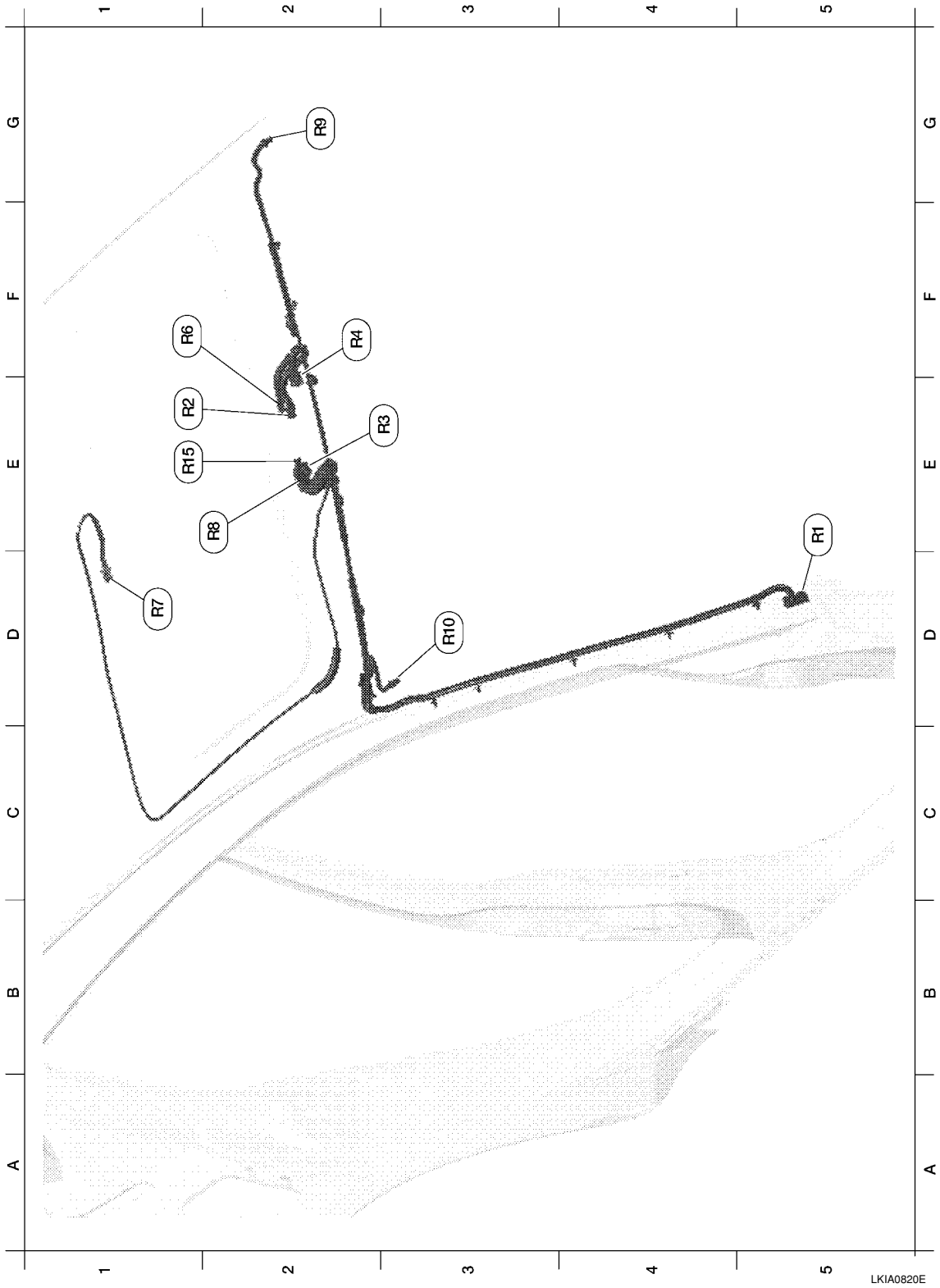

D5	R1	W/16	: To M1				
F2	R2	GR/6	: Map lamp				
F2	R3	W/3	: Map lamp				
F2	R4	GR/10	: Sunroof motor assembly				
F2	R6	W/3	: Sunroof switch				

D1	R7	W/3	: Interior room lamp				
E2	R8	W/3	: To R50 (without map lamps)				
G2	R9	W/2	: Vanity mirror lamp LH				
D3	R10	W/2	: Vanity mirror lamp RH				
D1	R15	W/8	: Microphone				

FRONT DOOR LH HARNESS

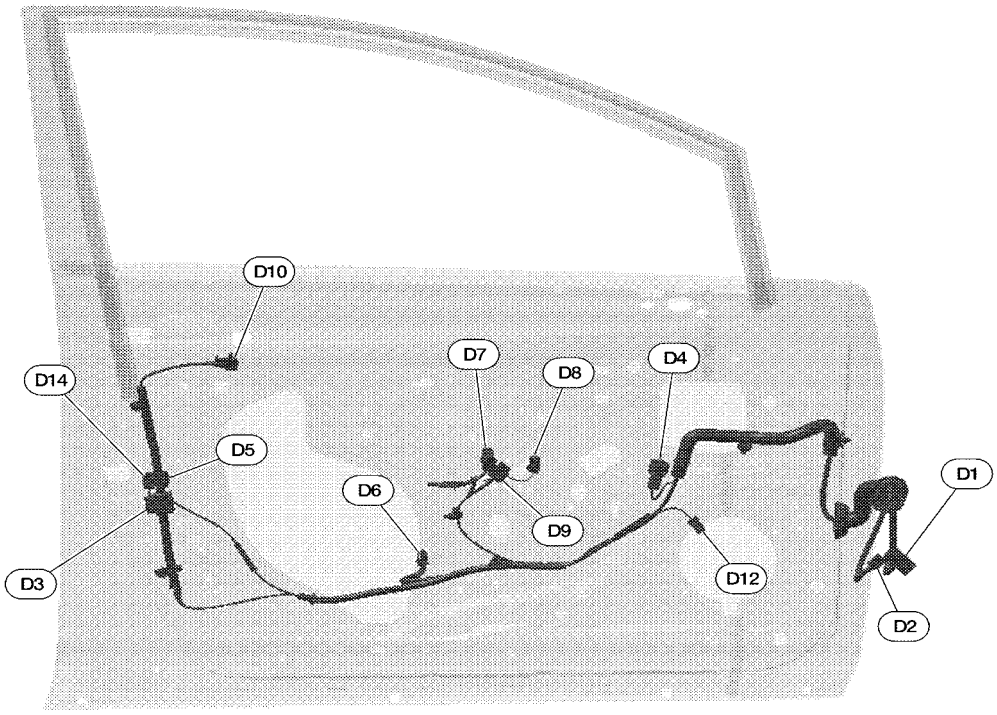

D1	W/16	: To M9	D8	W/3	: Main power window and door lock/ unlock switch
D2	W/16	: To M8	D9	B/6	: Front power window motor LH
D3	B/6	: Front door lock actuator LH	D10	GR/2	: Front outside antenna LH
D4	BR/8	: Door mirror LH	D12	W/2	: Front door speaker LH
D5	GR/2	: Front door request switch LH	D14	BR/3	: Front door key cylinder switch LH
D6	BR/2	: Intelligent key warning buzzer (front door LH)			
D7	W/16	: Main power window and door lock/ unlock switch			

FRONT DOOR RH HARNESS

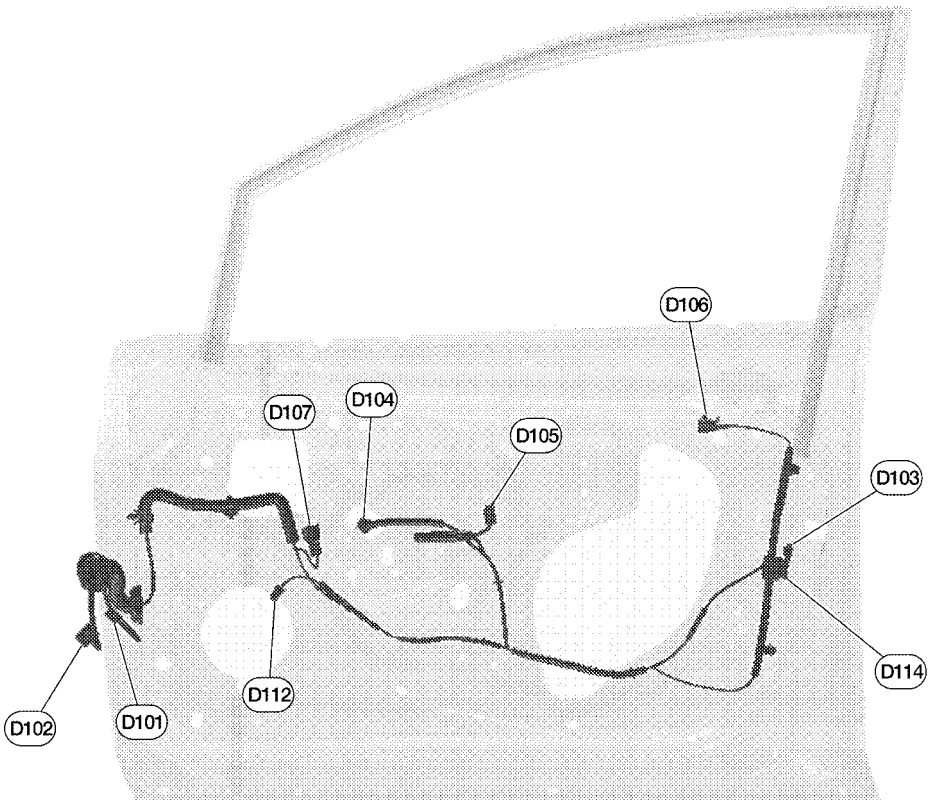

LKIA0822E

D101	W/12	: To M75	D106	GR/2	: Front outside antenna RH
D102	W/12	: To M74	D107	BR/8	: Door mirror RH
D103	GR/2	: Front door request switch RH	D112	W/2	: Front door speaker RH
D104	BR/2	: Front power window motor RH	D114	B/6	: Front door lock actuator RH
D105	W/12	: Power window and door lock/unlock switch RH			

REAR DOOR LH HARNESS

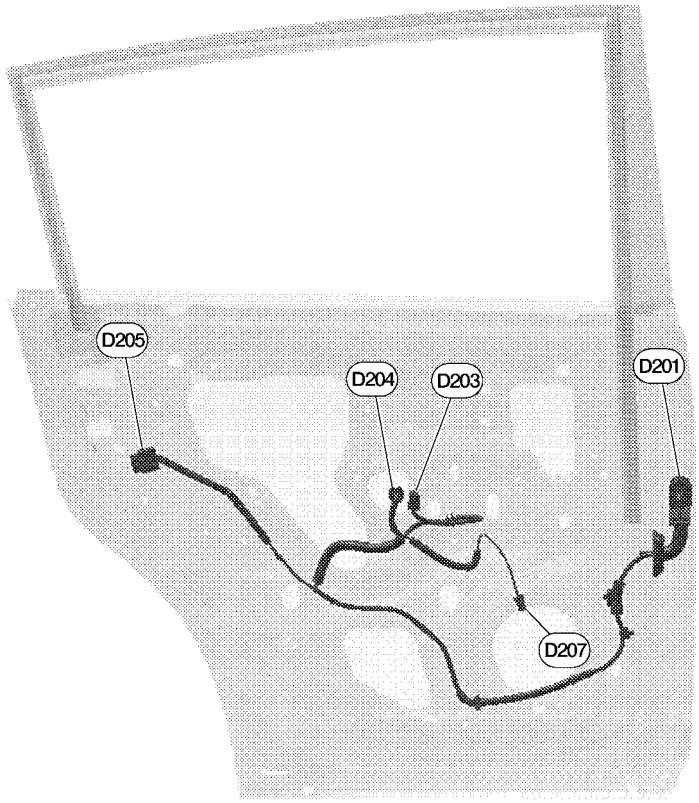

LKIA0824E

D201	W/8	: To B4	D205	B/6	: Rear door lock actuator LH
D203	W/8	: Rear power window switch LH	D207	W/2	: Rear door speaker LH
D204	BR/2	: Rear power window motor LH			

REAR DOOR RH HARNESS

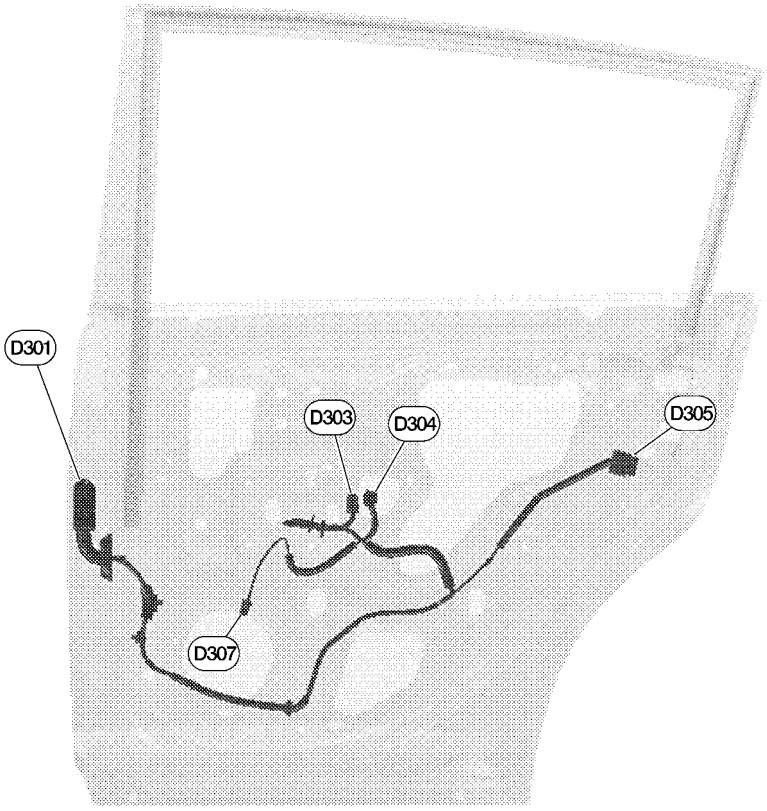

LKIA0823E

D301	W/8	: To B119	D305	B/6	: Rear door lock actuator RH
D303	W/8	: Rear power window switch RH	D307	W/2	: Rear door speaker RH
D304	BR/2	: Rear power window motor RH			

BACK DOOR HARNESS (HATCHBACK ONLY)

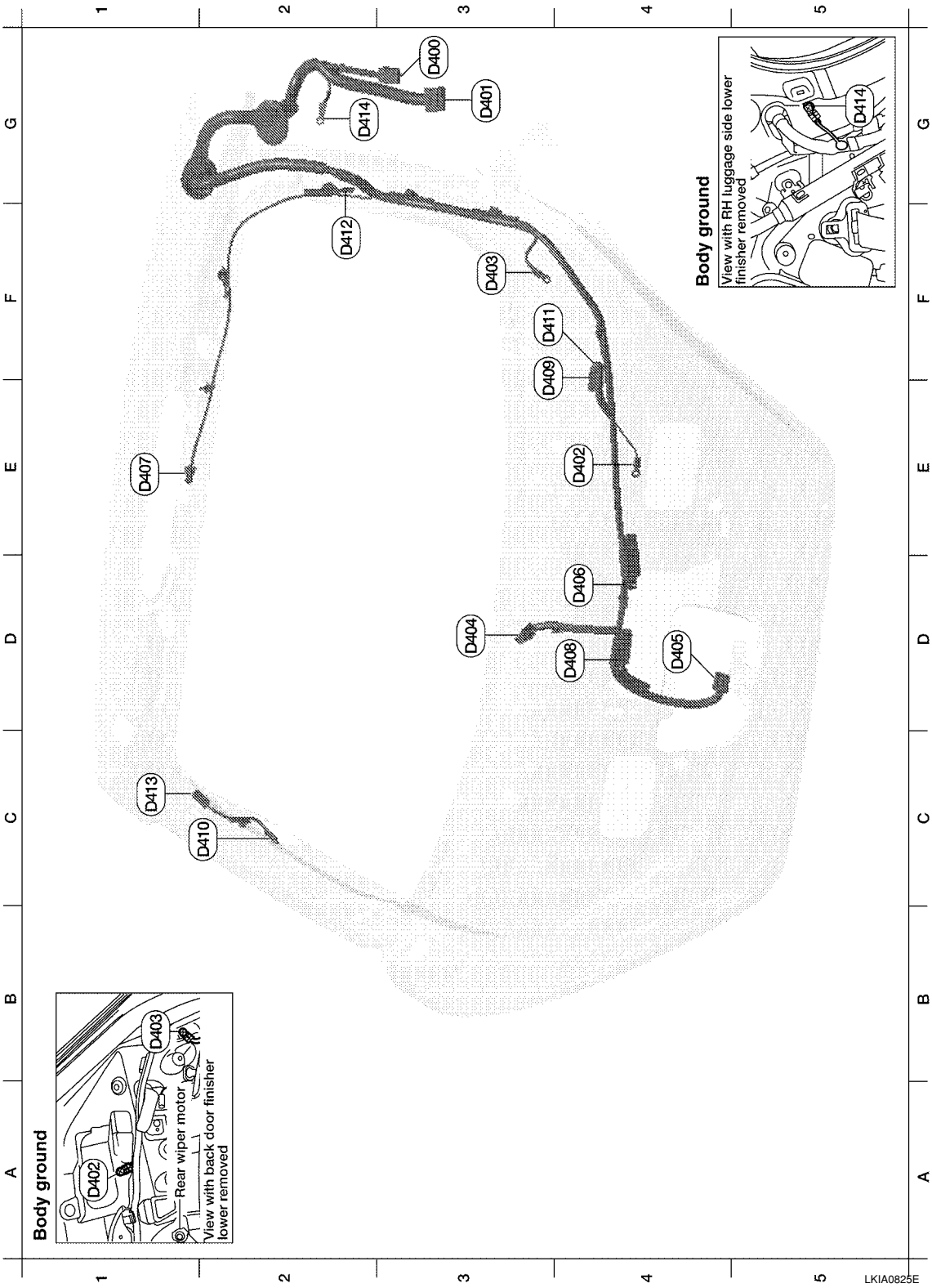

G3	D400	W/12	: To B133				
G3	D401	W/12	: To B134				
G3	D401	W/24	: To B48 (without power back door)				
E4	D402	—	: Body ground				
F3	D403	—	: Body ground				

D3	D404	W/3	: Rear wiper motor				
D4	D405	W/4	: Back door lock assembly				
D4	D406	W/2	: Back door request switch				
E2	D407	W/2	: High mounted stop lamp				
D4	D408	BR/2	: Back door opener switch				
E4	D409	B/1	: Condenser-1				
C2	D410	—	: Body ground				
E3	D411	B/1	: Condenser-1				
E1	D412	B/1	: Rear window defogger (+)				
C2	D413	B/1	: Rear window defogger (-)				
F3	D414	—	: Body ground				

Wiring Diagram Codes (Cell Codes)

INFOID:0000000001704709

Use the chart below to find out what each wiring diagram code stands for.
Refer to the wiring diagram code in the alphabetical index to find the location (page number) of each wiring diagram.

Code	Section	Wiring Diagram Name
ABS	BRC	Anti-lock Brake System
A/C,M	MTC	Manual Air Conditioner
APPS1	EC	Accelerator Pedal Position Sensor
A/F	EC	Air Fuel Ratio Sensor 1
A/FH	EC	Air Fuel Ratio Sensor 1 Heater
APPS2	EC	Accelerator Pedal Position Sensor
APPS3	EC	Accelerator Pedal Position Sensor
ASC/BS	EC	ASCD Brake Switch
ASC/SW	EC	ASCD Steering Switch
ASCBOF	EC	ASCD Brake Switch
ASCIND	EC	ASCD Indicator
AT/IND	DI	A/T Indicator Lamp
AUDIO	AV	Audio
BACK/L	LT	Back-up Lamp
BA/FTS	AT	A/T Fluid Temperature Sensor and TCM Power Supply
B/DOOR	BL	Back Door Opener
BRK/SW	EC	Brake Switch
CAN	AT	CAN Communication Line
CAN	CVT	CAN Communication Line
CAN	EC	CAN Communication Line
CAN	LAN	CAN System
CHARGE	SC	Charging System
CHIME	DI	Warning Chime
COOL/F	EC	Cooling Fan Control
COMBSW	LT	Combination Switch
CVTIND	DI	CVT Indicator Lamp
D/LOCK	BL	Power Door Lock
DEF	GW	Rear Window Defogger
DTRL	LT	Headlamp - With Daytime Light System
ECTS	EC	Engine Coolant Temperature Sensor
ENGSS	AT	Engine Speed Signal
EPS	STC	Electronic Controlled Power Steering
ETC1	EC	Electric Throttle Control Function

ETC2	EC	Throttle Control Motor Relay
ETC3	EC	Throttle Control Motor
F/FOG	LT	Front Fog Lamp
F/PUMP	EC	Fuel Pump
FTS	AT	A/T Fluid Temperature Sensor
FTS	CVT	CVT Fluid Temperature Sensor Circuit
FTTS	EC	Fuel Tank Temperature Sensor
FUEL	EC	Fuel Ignition System Function
HEATER	MTC	Heater System
H/LAMP	LT	Headlamp
H/PHON	AV	Hands Free Telephone
HORN	WW	Horn
HO2S2	EC	Heated Oxygen Sensor 2
HO2S2H	EC	Heated Oxygen Sensor 2 Heater
IATS	EC	Intake Air Temperature Sensor
IGNSYS	EC	Ignition System
I/KEY	BL	Intelligent Key System
ILL	LT	Illumination
INJECT	EC	Injector
INT/L	LT	Room/Map, Vanity and Luggage Lamps
IVC	EC	Intake Valve Timing Control Solenoid Valve
KEYLES	BL	Remote Keyless Entry System
KS	EC	Knock Sensor
LPSV	AT	Line Pressure Solenoid Valve
LPSV	CVT	Line Pressure Solenoid Valve
L/USSV	CVT	Lock-up Select Solenoid Valve
MAFS	EC	Mass Air Flow Sensor
MAIN	AT	Main Power Supply and Ground Circuit
MAIN	EC	Main Power Supply and Ground Circuit
METER	DI	Speedometer, Tachometer, Temp. and Fuel Gauges
MIL/DL	EC	Malfunction Indicator Lamp
MIRROR	GW	Door Mirror
NATS	BL	Nissan Anti-Theft System
NONDTC	AT	Non-detectable Item
NONDTC	CVT	Non-detectable Item
ODSW	CVT	Overdrive Control Switch
OVRCSV	AT	Over Run Clutch Solenoid Valve
P/SCKT	WW	Power Socket
PGC/V	EC	EVAP Canister Purge Volume Control Solenoid Valve
PHASE	EC	Camshaft Position Sensor (PHASE)
PNP/SW	AT	Park/Neutral Position Switch
PNP/SW	CVT	Park/Neutral Position Switch
PNP/SW	EC	Park/Neutral Position Switch
POS	EC	Crankshaft Position Sensor (POS)
POWER	CVT	Transmission Control Module (Power Supply)
PRE/SE	EC	EVAP Control System Pressure Sensor
PRIPS	CVT	Primary Pressure Sensor
PRSCVT	CVT	Primary Speed Sensor CVT (Revolution Sensor)
PT/SEN	AT	Powertrain Revolution Sensor
RP/SEN	EC	Refrigerant Pressure Sensor
SECPS	CVT	Secondary Pressure Sensor
SECPSV	CVT	Secondary Speed Sensor CVT (Revolution Sensor)

SEN/PW	EC	Sensor Power Supply
SESCVT	CVT	Secondary Pressure Sensor Solenoid Valve
SHIFT	AT	A/T Shift Lock System
SHIFT	CVT	CVT Shift Lock System
SROOF	RF	Sunroof
SRS	SRS	Supplemental Restraint System
SSV/A	AT	Shift Solenoid Valve A
SSV/B	AT	Shift Solenoid Valve B
START	SC	Starting System
STM	CVT	Step Motor
STSIG	CVT	Start Signal Circuit
STOP/L	LT	Stop Lamp
TCV	AT	Torque Converter Clutch Solenoid Valve
TCV	CVT	Torque Converter Clutch Solenoid Valve
T/LID	BL	Trunk Lid Opener
T/WARN	WT	Low Tire Pressure Warning System
TAIL/L	LT	Parking, License and Tail Lamps
TPS1	EC	Throttle Position Sensor
TPS2	EC	Throttle Position Sensor
TPS3	EC	Throttle Position Sensor
TURN	LT	Turn Signal and Hazard Warning Lamps
VEHSEC	BL	Vehicle Security (Theft Warning) System
VENT/V	EC	EVAP Canister Vent Control Valve
VSSA/T	AT	Vehicle Speed Sensor A/T (Revolution Sensor)
VSSMTR	AT	Vehicle Speed Sensor MTR
WARN	DI	Warning Lamps
WINDOW	GW	Power Window
WIP/R	WW	Rear Wiper and Washer
WIPER	WW	Front Wiper and Washer

ELECTRICAL UNITS LOCATION

Electrical Units Location

INFOID:0000000001704710

ENGINE COMPARTMENT

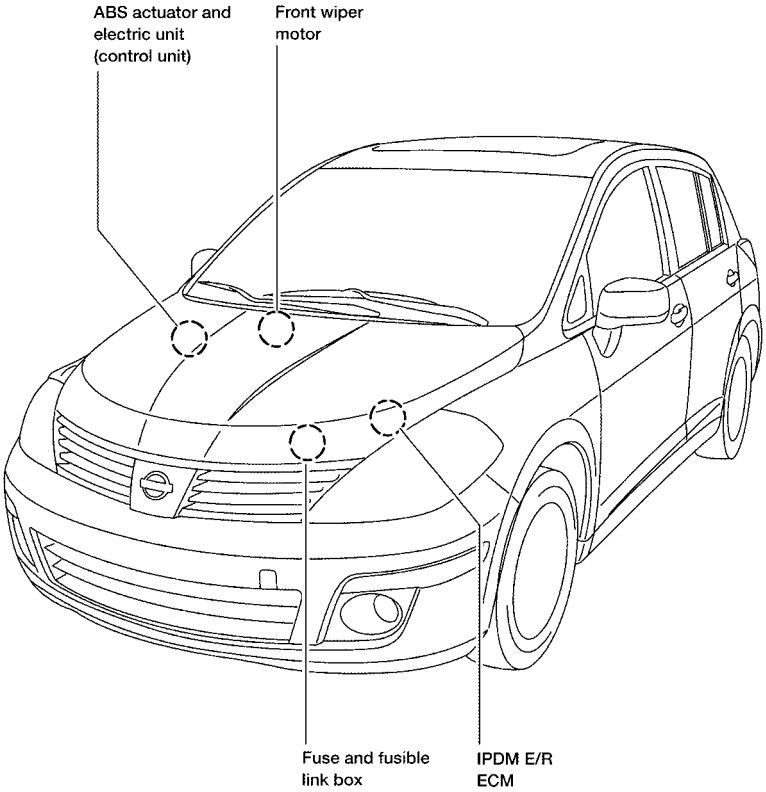

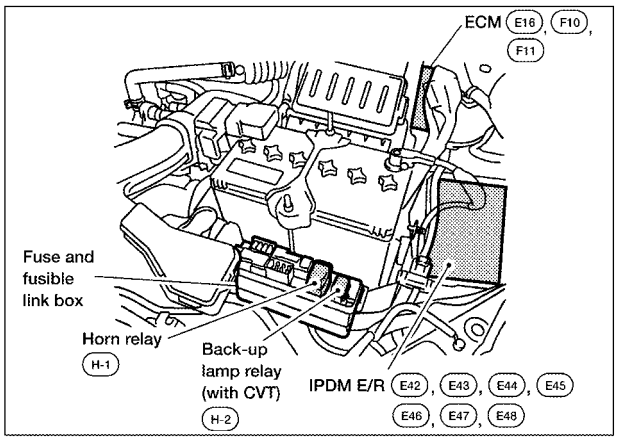

WKIA6006E

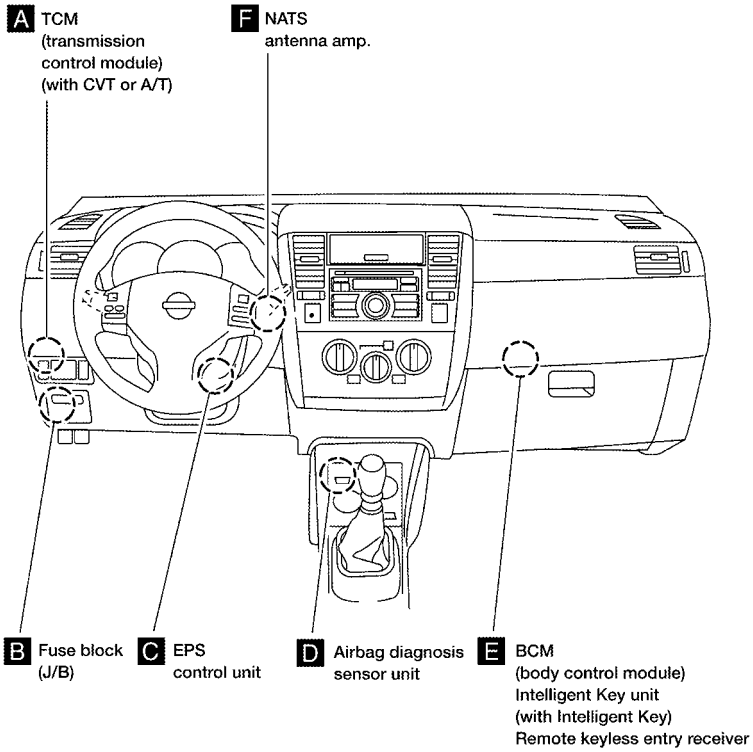
A TCM (transmission control module) (with CVT or A/T)
F NATS antenna amp.
B Fuse block (J/B)
C EPS control unit
D Airbag diagnosis sensor unit
E BCM (body control module) Intelligent Key unit (with Intelligent Key) Remote keyless entry receiver

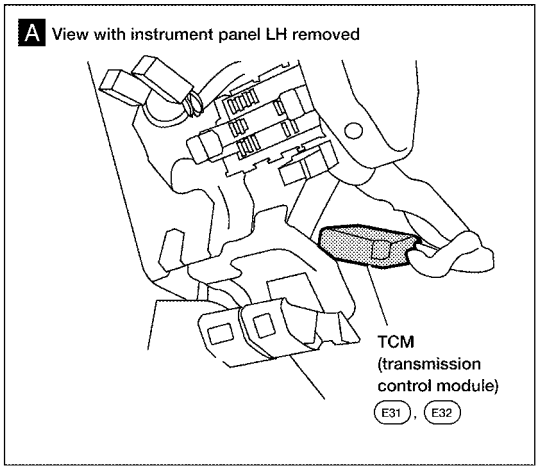
A View with instrument panel LH removed
TCM (transmission control module)
E31 , E32

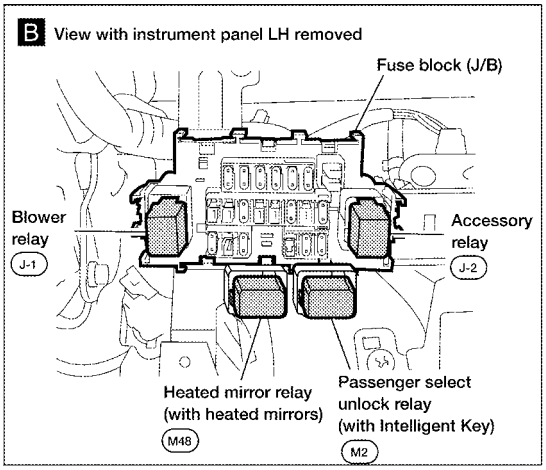
B View with instrument panel LH removed
Fuse block (J/B)
Blower relay
J-1
Accessory relay
J-2
Heated mirror relay (with heated mirrors)
M48
Passenger select unlock relay (with Intelligent Key)
M2

LKIA0827E

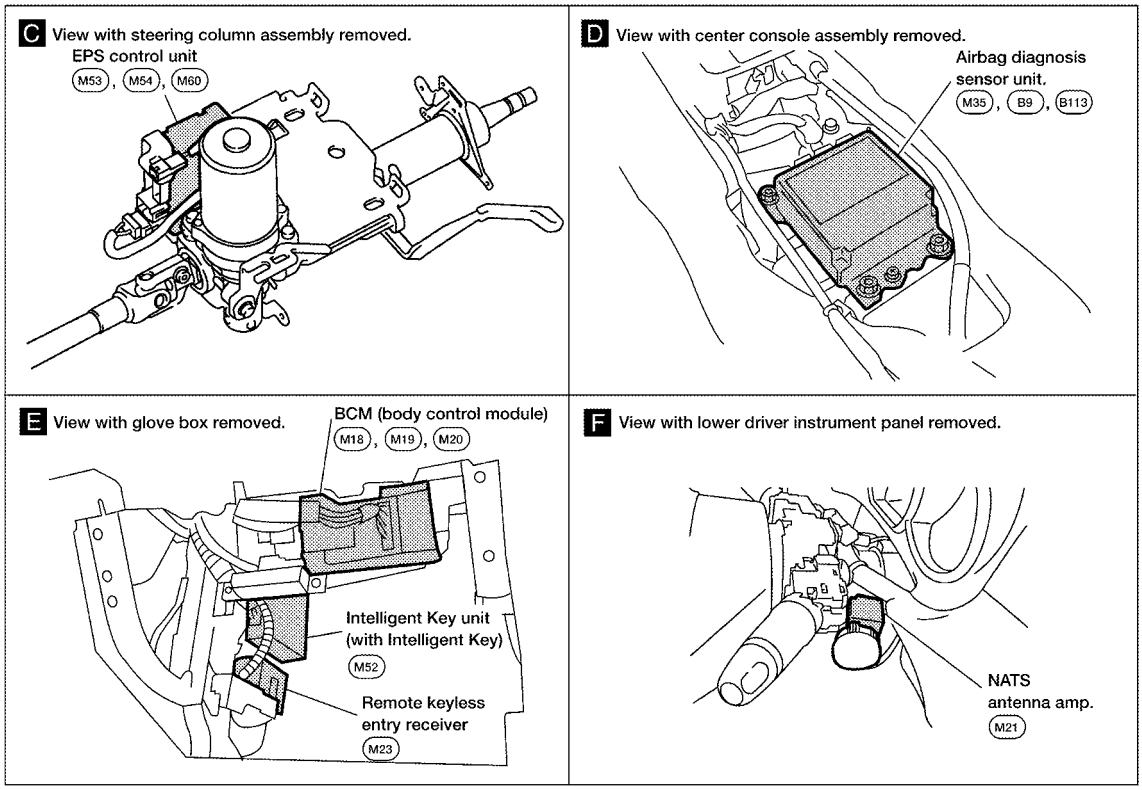
C View with steering column assembly removed.
EPS control unit
M53, M54, M60
D View with center console assembly removed.
Airbag diagnosis sensor unit.
M35, B9, B113
E View with glove box removed.
BCM (body control module)
M18, M19, M20
Intelligent Key unit (with Intelligent Key)
M52
Remote keyless entry receiver
M23
F View with lower driver instrument panel removed.
NATS antenna amp.
M21

LKIA0828E

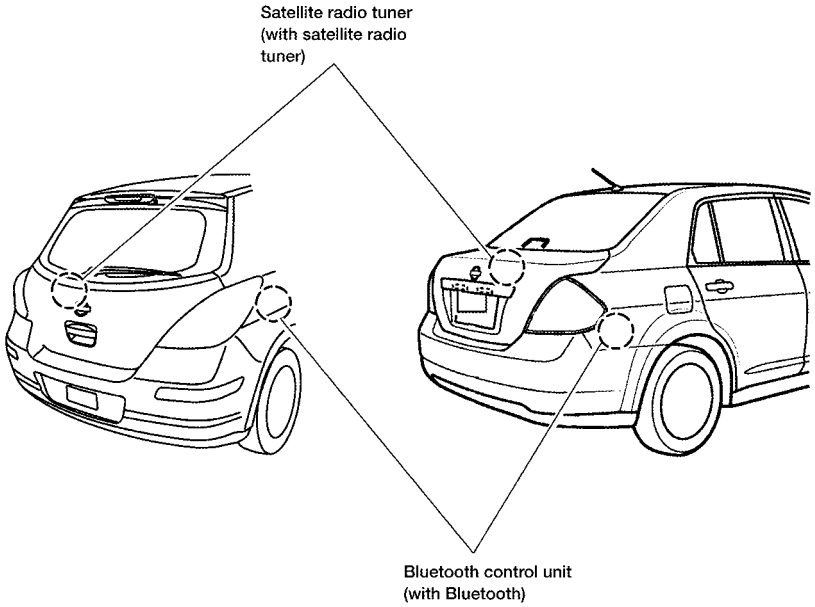
Satellite radio tuner
(with satellite radio
tuner)
Bluetooth control unit
(with Bluetooth)

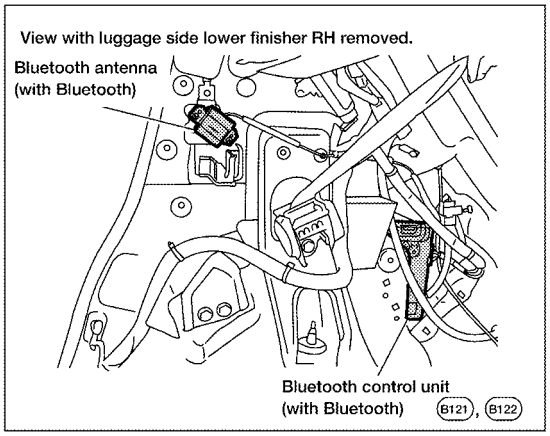
View with luggage side lower finisher RH removed.
Bluetooth antenna
(with Bluetooth)
Bluetooth control unit
(with Bluetooth)
B121
B122

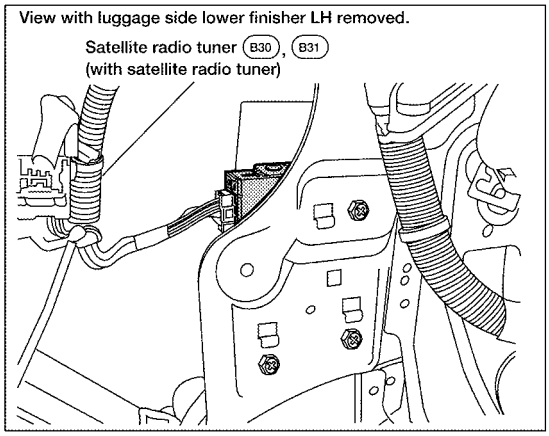
View with luggage side lower finisher LH removed.
Satellite radio tuner
B30
B31
(with satellite radio tuner)

WKIA5998E

HARNESS CONNECTOR

Description

INFOID:0000000001704711

HARNESS CONNECTOR (TAB-LOCKING TYPE)

- The tab-locking type connectors help prevent accidental looseness or disconnection.
- The tab-locking type connectors are disconnected by pushing or lifting the locking tab(s). Refer to the illustration below.

Refer to the next page for description of the slide-locking type connector.

CAUTION:

Do not pull the harness or wires when disconnecting the connector.

[Example]

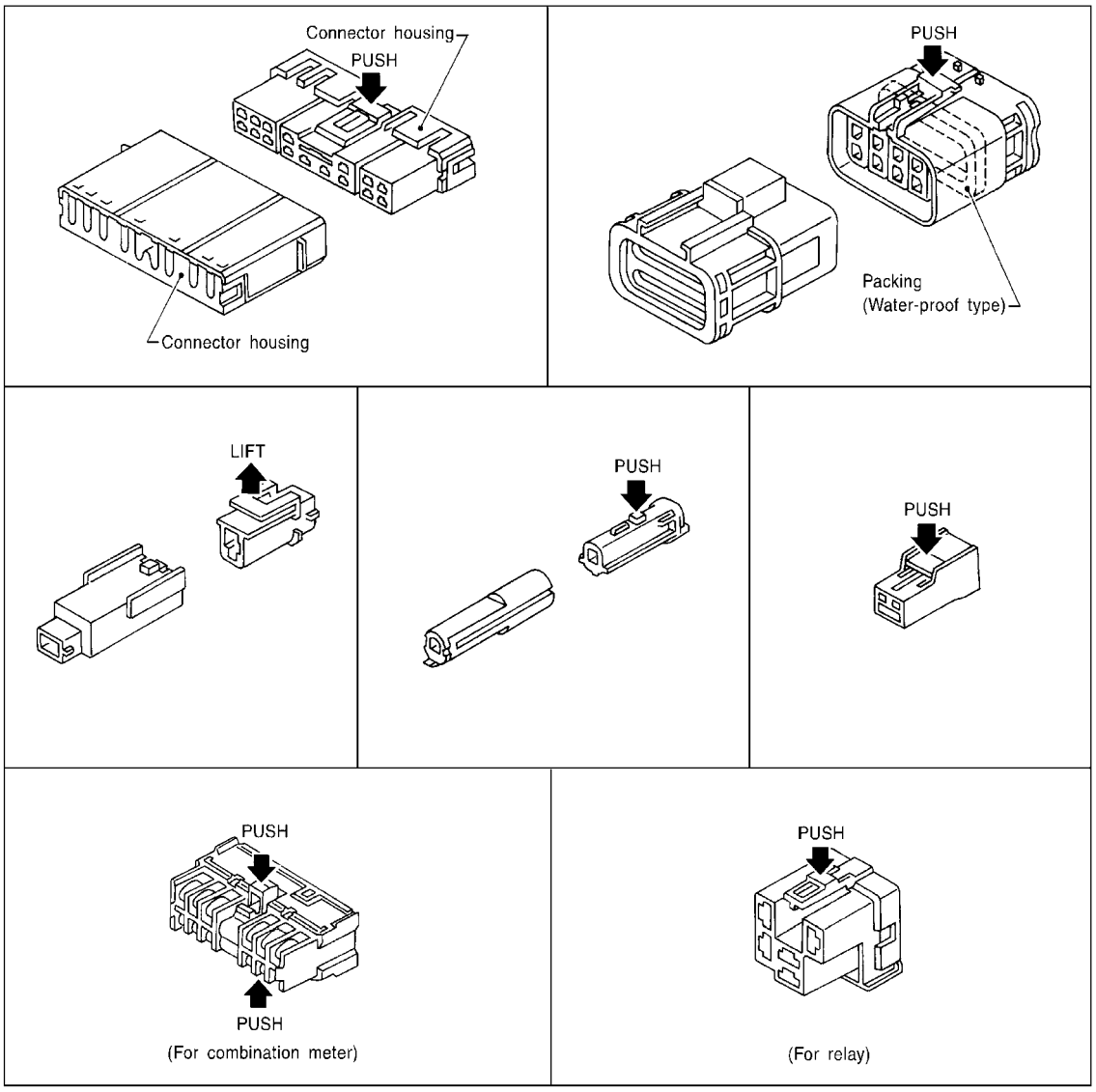

SEL769DA

HARNESS CONNECTOR (SLIDE-LOCKING TYPE)

- A new style slide-locking type connector is used on certain systems and components, especially those related to OBD.
- The slide-locking type connectors help prevent incomplete locking and accidental looseness or disconnection.
- The slide-locking type connectors are disconnected by pushing or pulling the slider. Refer to the figure below.

CAUTION:
- **Do not pull the harness or wires when disconnecting the connector.**
- **Be careful not to damage the connector support bracket when disconnecting the connector.**

[Example]

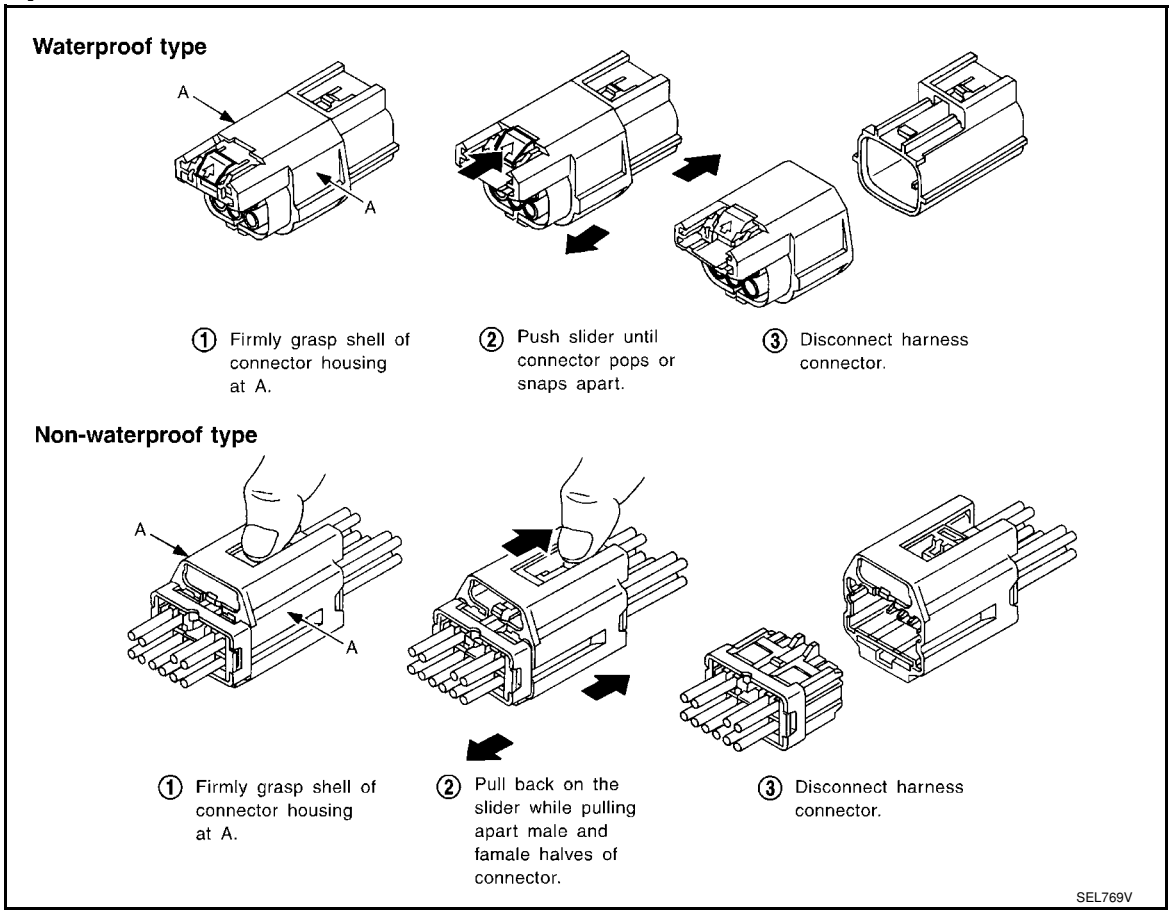

HARNESS CONNECTOR (LEVER LOCKING TYPE)

- Lever locking type harness connectors are used on certain control units and control modules such as ECM, ABS actuator and electric unit (control unit), etc.
- Lever locking type harness connectors are also used on super multiple junction (SMJ) connectors.
- Always confirm the lever is fully locked in place by moving the lever as far as it will go to ensure full connection.

CAUTION:

Always confirm the lever is fully released (loosened) before attempting to disconnect or connect these connectors to avoid damage to the connector housing or terminals.

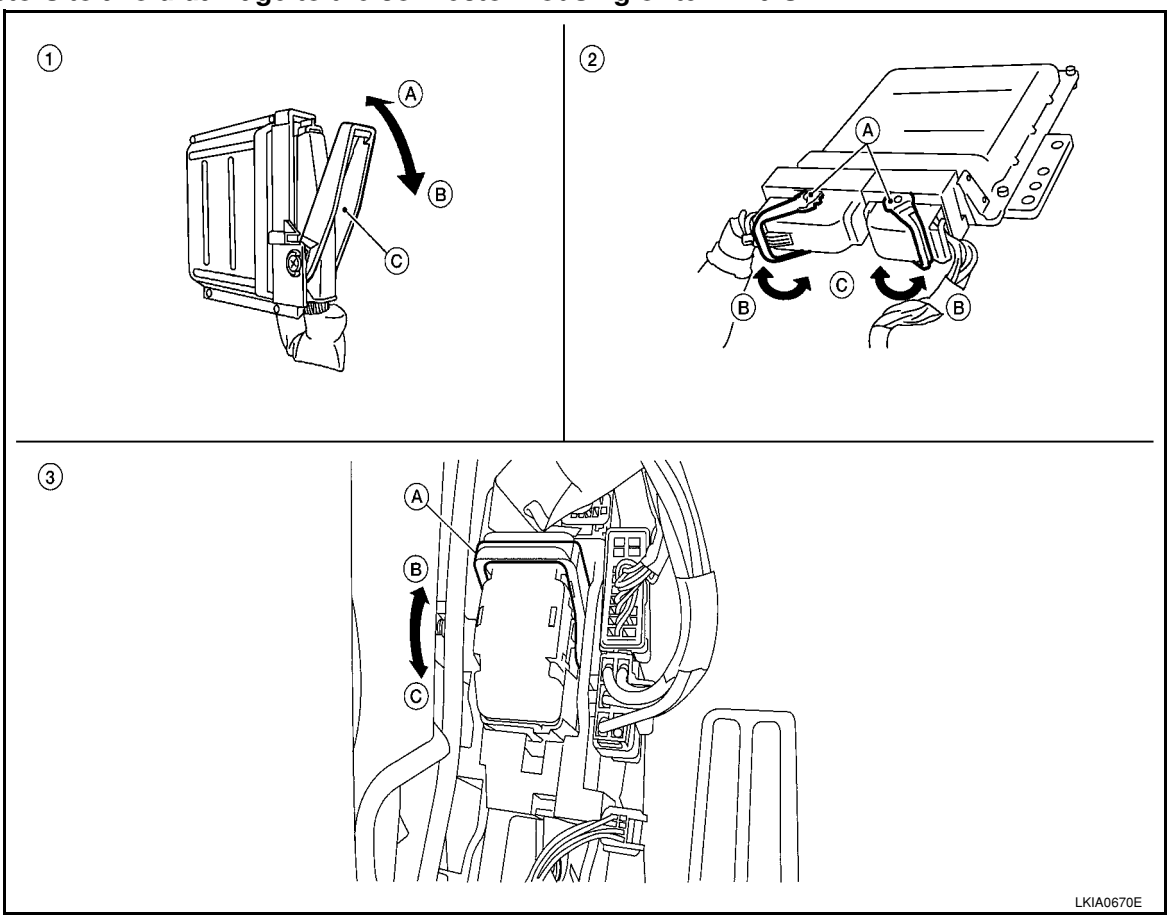

1. Control unit with single lever
   A. Fasten
   B. Loosen
   C. Lever
2. Control unit with dual levers
   A. Levers
   B. Fasten
   C. Loosen
3. SMJ connector
   A. Lever
   B. Fasten
   C. Loosen

HARNESS CONNECTOR (DIRECT-CONNECT SRS COMPONENT TYPE)

- SRS direct-connect type harness connectors are used on certain SRS components such as air bag modules and seat belt pre-tensioners.
- Always pull up to release black locking tab prior to removing connector from SRS component.
- Always push down to lock black locking tab after installing connector to SRS component. When locked, the black locking tab is level with the connector housing.

CAUTION:

- **Do not pull the harness or wires when removing connectors from SRS components.**

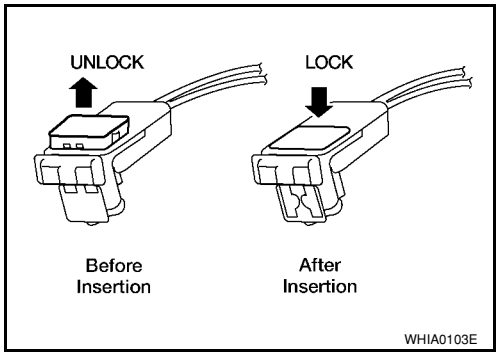

ELECTRICAL UNITS

Terminal Arrangement

INFOID:0000000001704712

BCM (BODY CONTROL MODULE)

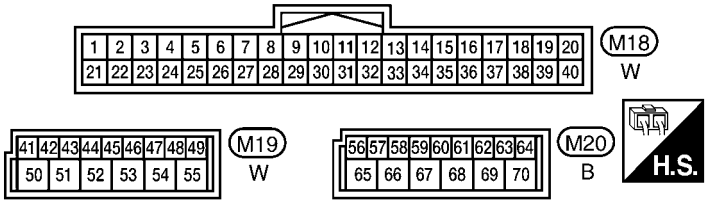

ABS ACTUATOR AND ELECTRIC UNIT (CONTROL UNIT)

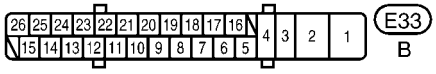

ECM

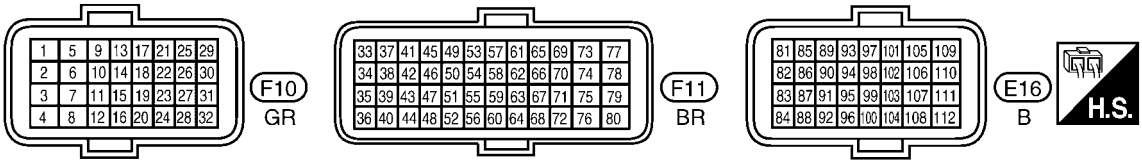

TCM (TRANSMISSION CONTROL MODULE)

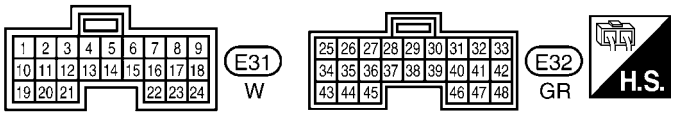

LKIA0810E

STANDARDIZED RELAY

Description

INFOID:0000000001704713

NORMAL OPEN, NORMAL CLOSED AND MIXED TYPE RELAYS

Relays can mainly be divided into three types: normal open, normal closed and mixed type relays.

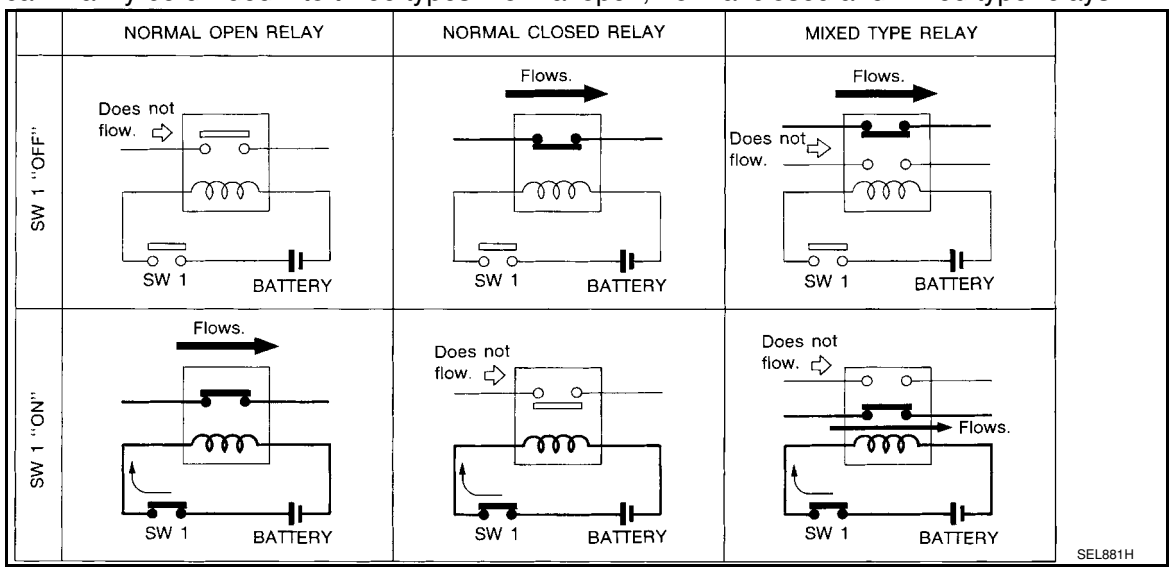

TYPE OF STANDARDIZED RELAYS

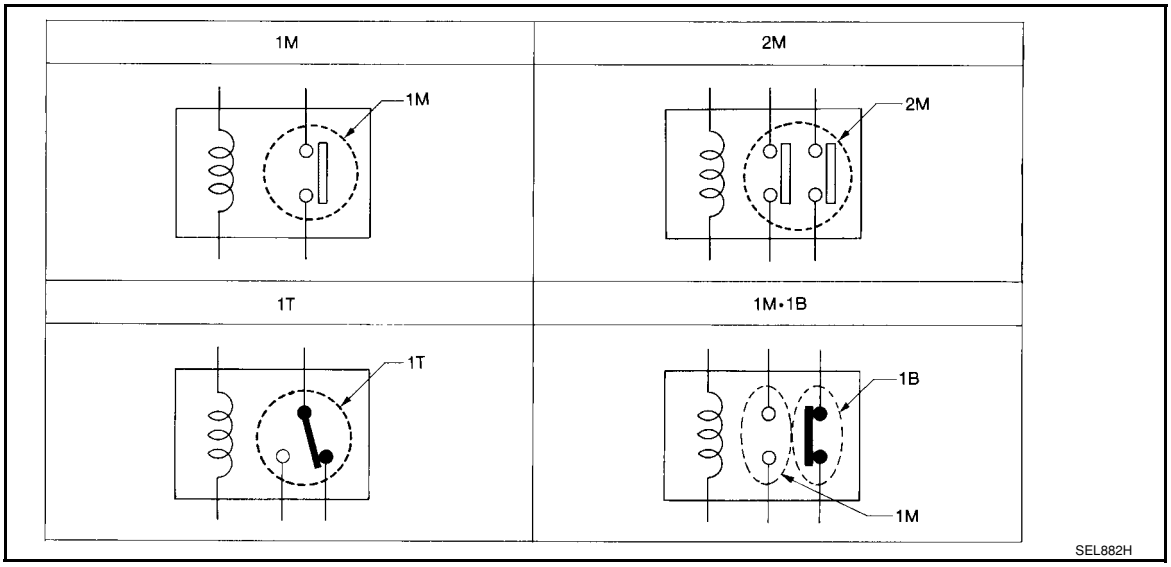

1M	1 Make	2M	2 Make
1T	1 Transfer	1M·1B	1 Make 1 Break

Type	Outer view	Circuit	Connector Symbol and connection	Case color
1T	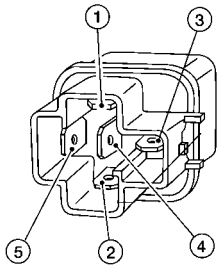	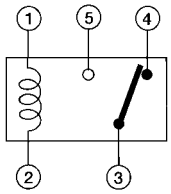	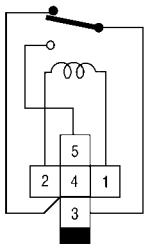	BLACK
2M	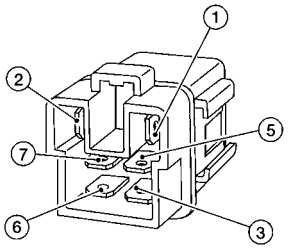	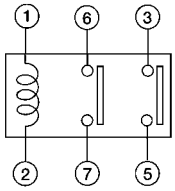	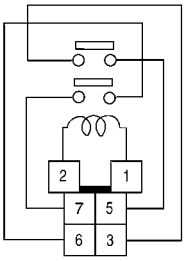	BROWN
1M ·1B	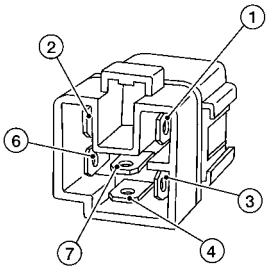	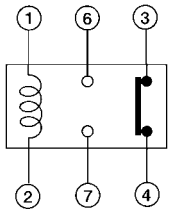	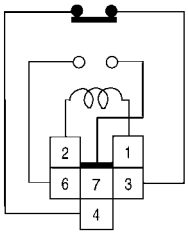	GRAY
1M	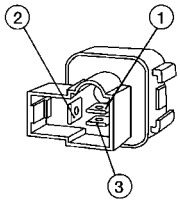	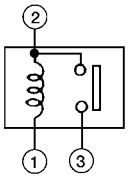	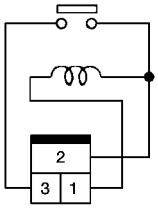	BLACK
	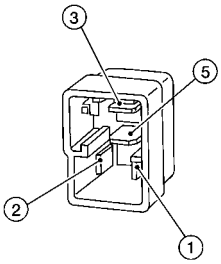	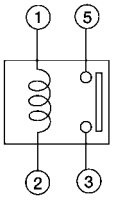	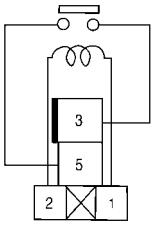	BLUE

The arrangement of terminal numbers on the actual relays may differ from those shown above.

WKIA0253E

SUPER MULTIPLE JUNCTION (SMJ)

Terminal Arrangement

INFOID:0000000001704714

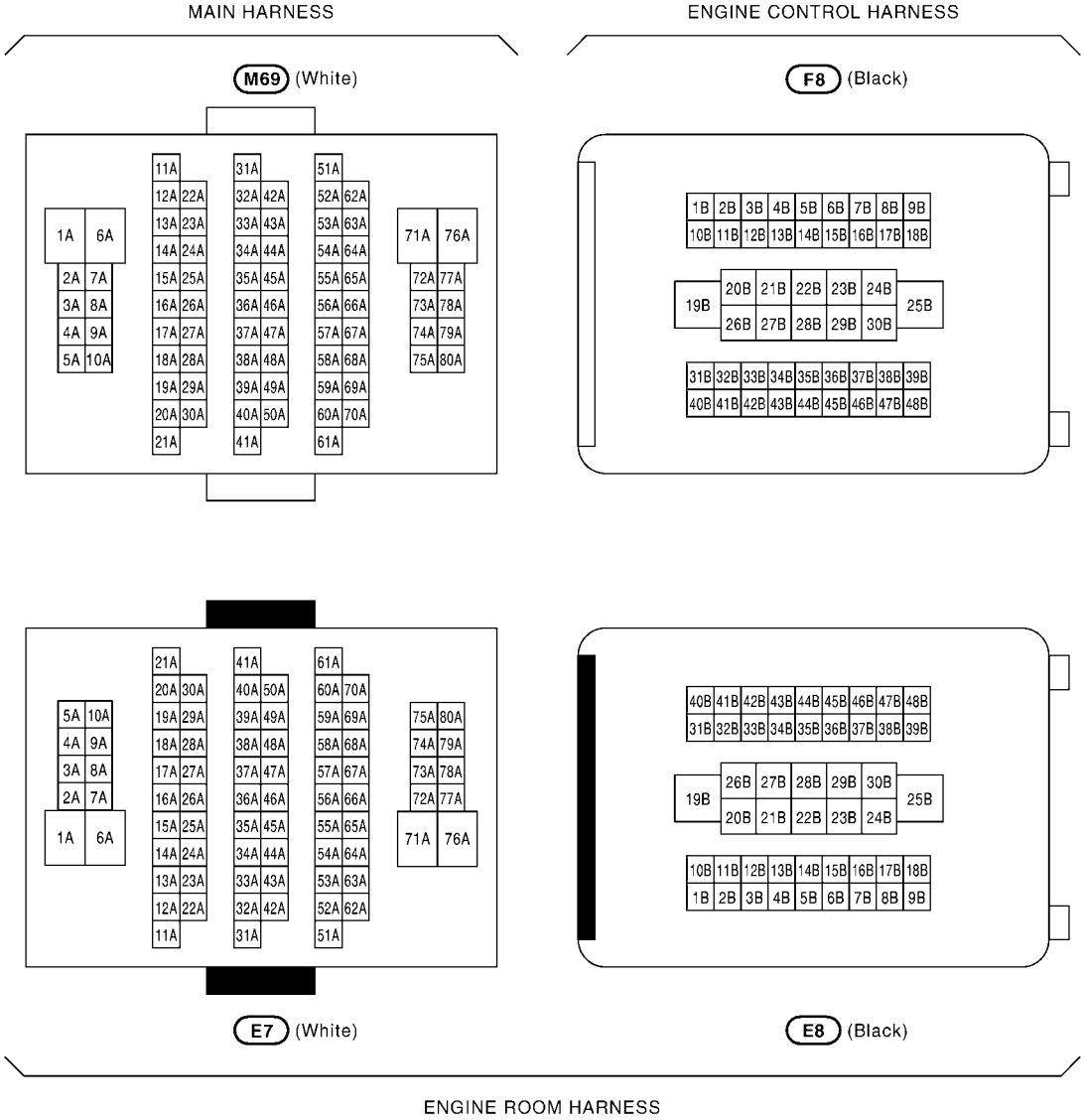

LKIA0811E

FUSE BLOCK-JUNCTION BOX (J/B)

Terminal Arrangement

INFOID:0000000001704715

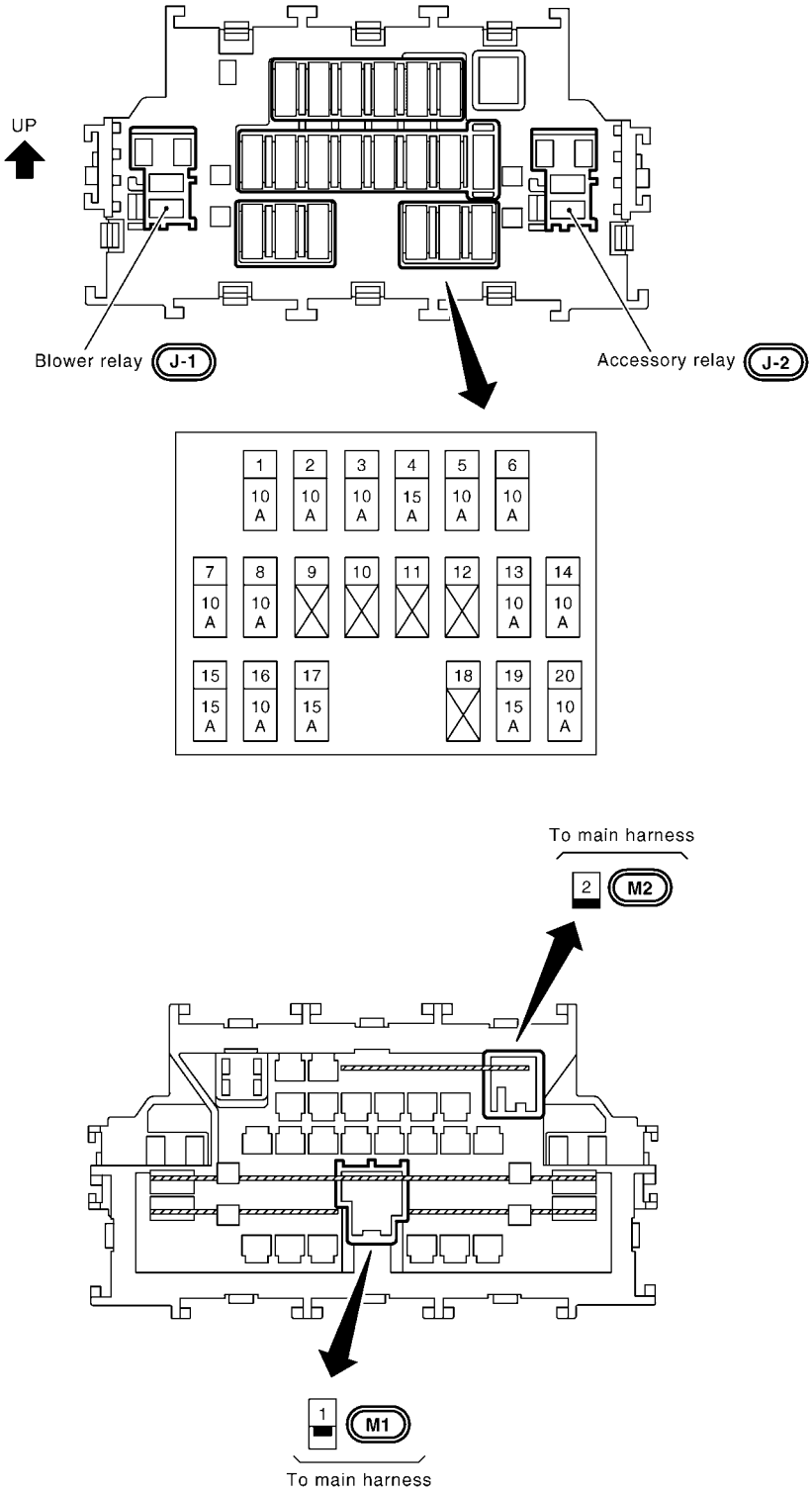

LKIA0812E

FUSE AND FUSIBLE LINK BOX

Terminal Arrangement

INFOID:0000000001704716

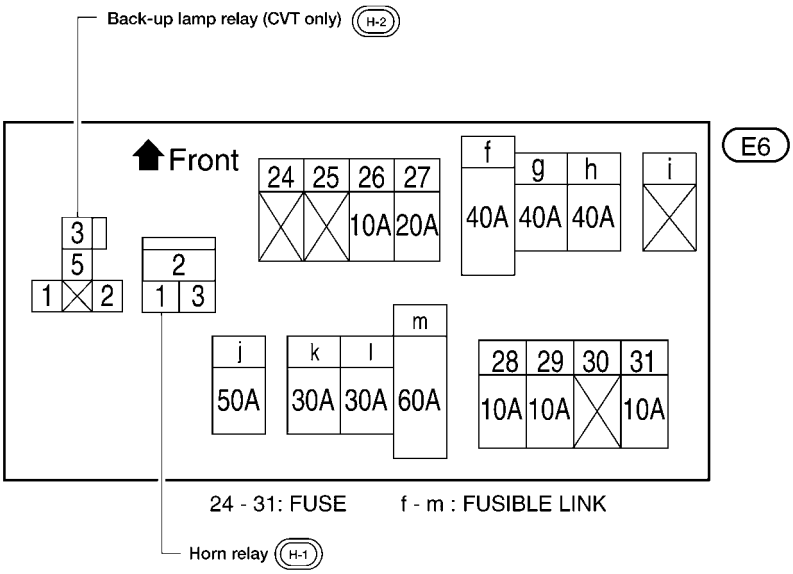

FUSIBLE LINK BOX (BATTERY)

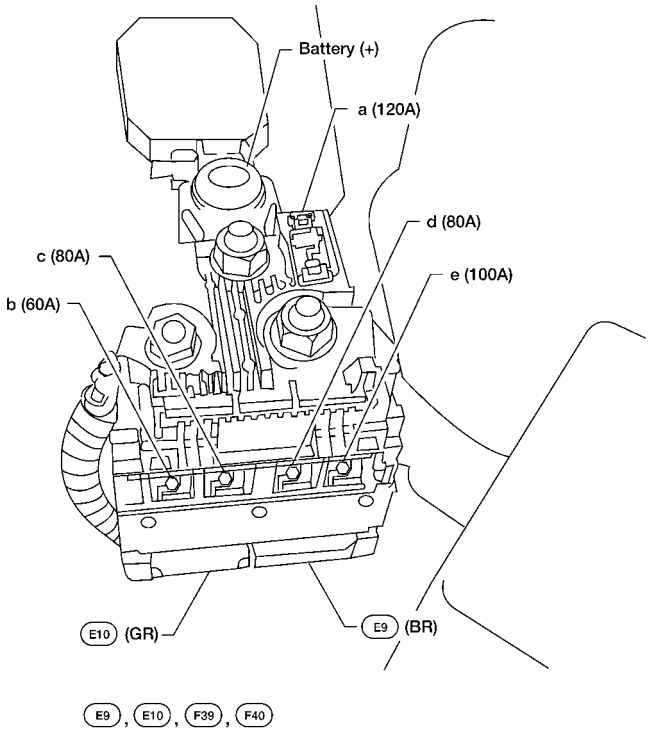

WKIA5604E

SECTION PS
POWER STEERING SYSTEM

CONTENTS

SERVICE INFORMATION 2

PRECAUTIONS 2
Precaution for Supplemental Restraint System (SRS) "AIR BAG" and "SEAT BELT PRE-TENSIONER" 2
Precaution Necessary for Steering Wheel Rotation After Battery Disconnect 2
Precaution for Steering System 2

PREPARATION 4
Special Service Tool 4
Commercial Service Tool 4

NOISE, VIBRATION AND HARSHNESS (NVH) TROUBLESHOOTING 5
NVH Troubleshooting Chart 5

STEERING WHEEL 6
On-Vehicle Inspection and Service 6
Removal and Installation 7

STEERING COLUMN 9
Removal and Installation 9

POWER STEERING GEAR 12
Removal and Installation 12
Disassembly and Assembly 13

SERVICE DATA AND SPECIFICATIONS (SDS) 17
Steering Wheel 17
Steering Angle 17
Steering Column 17
Steering Outer Socket and Inner Socket 17
Steering Gear 18

SERVICE INFORMATION

PRECAUTIONS

Precaution for Supplemental Restraint System (SRS) "AIR BAG" and "SEAT BELT PRE-TENSIONER"

INFOID:0000000001703853

The Supplemental Restraint System such as “AIR BAG” and “SEAT BELT PRE-TENSIONER”, used along with a front seat belt, helps to reduce the risk or severity of injury to the driver and front passenger for certain types of collision. This system includes seat belt switch inputs and dual stage front air bag modules. The SRS system uses the seat belt switches to determine the front air bag deployment, and may only deploy one front air bag, depending on the severity of a collision and whether the front occupants are belted or unbelted.
Information necessary to service the system safely is included in the SRS and SB section of this Service Manual.

WARNING:

- **To avoid rendering the SRS inoperative, which could increase the risk of personal injury or death in the event of a collision which would result in air bag inflation, all maintenance must be performed by an authorized NISSAN/INFINITI dealer.**
- **Improper maintenance, including incorrect removal and installation of the SRS, can lead to personal injury caused by unintentional activation of the system. For removal of Spiral Cable and Air Bag Module, see the SRS section.**
- **Do not use electrical test equipment on any circuit related to the SRS unless instructed to in this Service Manual. SRS wiring harnesses can be identified by yellow and/or orange harnesses or harness connectors.**

Precaution Necessary for Steering Wheel Rotation After Battery Disconnect

INFOID:0000000001703854

NOTE:

- This procedure is applied only to models with Intelligent Key system and NATS (NISSAN ANTI-THEFT SYSTEM).
- Remove and install all control units after disconnecting both battery cables with the ignition switch in the ″LOCK″ position.
- Always use CONSULT-II to perform self-diagnosis as a part of each function inspection after finishing work. If DTC is detected, perform trouble diagnosis according to self-diagnostic results.

For models equipped with the Intelligent Key system and NATS, an electrically controlled steering lock mechanism is adopted on the key cylinder.
For this reason, if the battery is disconnected or if the battery is discharged, the steering wheel will lock and steering wheel rotation will become impossible.
If steering wheel rotation is required when battery power is interrupted, follow the procedure below before starting the repair operation.

OPERATION PROCEDURE

1. Connect both battery cables.
   NOTE:
   Supply power using jumper cables if battery is discharged.
2. Use the Intelligent Key or mechanical key to turn the ignition switch to the ″ACC″ position. At this time, the steering lock will be released.
3. Disconnect both battery cables. The steering lock will remain released and the steering wheel can be rotated.
4. Perform the necessary repair operation.
5. When the repair work is completed, return the ignition switch to the ″LOCK″ position before connecting the battery cables. (At this time, the steering lock mechanism will engage.)
6. Perform a self-diagnosis check of all control units using CONSULT-II.

Precaution for Steering System

INFOID:0000000001703855

- In case of removing steering gear assembly, make the final tightening with grounded and unloaded vehicle condition, and then check wheel alignment.
- Observe the following precautions when disassembling.

- Before disassembly, thoroughly clean the outside of the unit.
- Disassembly should be done in a clean work area. It is important to prevent the internal parts from becoming contaminated by dirt or other foreign matter.
- For easier and proper assembly, place disassembled parts in order on a parts rack.
- Use nylon cloth or paper towels to clean the parts; common shop rags can leave lint that might interfere with their operation.
- Do not reuse non-reusable parts.
- Before assembling, apply the specified grease to the directed parts.

PREPARATION

Special Service Tool

INFOID:0000000001703856

The actual shapes of Kent-Moore tools may differ from those of special tools illustrated here.

Tool number (Kent-Moore No.) Tool name		Description
ST3127S000 (J-25742-1) Preload gauge (J-25765-A) 1. GG91030000 Torque wrench 2. HT62940000 (　—　) Socket adapter (1/2") 3. HT62900000 (　—　) Socket adapter (3/8")	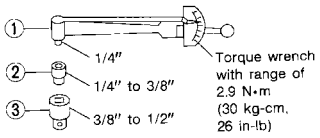 S-NT541	Inspecting rotating torque for steering column assembly and pinion assembly
KV40107300 (　—　) Boot Band crimping tool	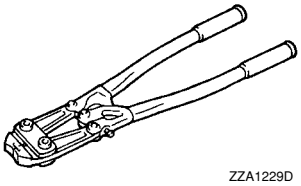 ZZA1229D	Installing boot bands
KV48103400 (　—　) Preload adapter	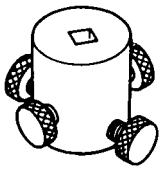 ZZA0824D	Inspecting of rotating torque for pinion assembly

Commercial Service Tool

INFOID:0000000001703857

Tool number Tool name		Description
Spring gauge	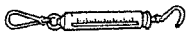 LST025	Inspecting steering wheel turning force and power steering gear linkage
Power tool	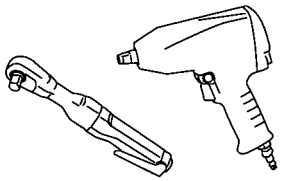 PBIC0190E	Removing nuts and bolts

NOISE, VIBRATION AND HARSHNESS (NVH) TROUBLESHOOTING

NVH Troubleshooting Chart

INFOID:0000000001703858

Use chart below to help you find the cause of the symptom. If necessary, repair or replace these parts.

Reference page		PS-13	PS-13	PS-6	PS-6	PS-6	PS-9	PS-12, PS-13	PS-9	PS-9	PS-13	FAX-4, "NVH Troubleshooting Chart"	FSU-5, "NVH Troubleshooting Chart"	WT-4, "NVH Troubleshooting Chart"	WT-4, "NVH Troubleshooting Chart"	FAX-4, "NVH Troubleshooting Chart"	BR-4, "NVH Troubleshooting Chart"
Possible cause and SUSPECTED PARTS		Outer/Inner socket ball joint swinging torque	Outer/Inner socket ball joint end play	Steering wheel play	Steering gear pinion rotating torque	Improper steering wheel	Improper installation or looseness of tilt lock lever	Mounting looseness	Steering column deformation or damage	Improper installation or looseness of steering column	Steering linkage looseness	WHEEL HUB	SUSPENSION	TIRES	ROAD WHEEL	DRIVE SHAFT	BRAKES
Symptom	Noise	×	×	×	×							×	×	×	×	×	×
	Shake					×	×	×				×	×	×	×	×	×
	Vibration					×	×	×	×	×		×	×	×		×	
	Shimmy					×	×	×			×	×	×	×	×		×
	Shudder							×			×	×	×	×	×		×

×: Applicable

STEERING WHEEL

On-Vehicle Inspection and Service

INFOID:0000000001703859

CHECKING CONDITION OF INSTALLATION

- Check installation conditions of steering gear assembly, front suspension assembly, axle and steering column assembly.
- Check if movement exists when steering wheel is moved up and down, to the left and right and to the axial direction.

Steering wheel axial end play : 0 mm (0 in)

- Check steering gear assembly mounting bolts and nuts for looseness. Refer to PS-12, "Removal and Installation" .

CHECKING STEERING WHEEL PLAY

- Turn steering wheel so that front wheels come to the straight-ahead position. Start engine and lightly turn steering wheel to the left and right until front wheels start to move. Measure steering wheel movement on the outer circumference.

Steering wheel play : 0 - 35 mm (0 - 1.38 in)

- When the measurement value is outside the standard value, check backlash for each joint of steering column assembly and installation condition of steering gear assembly.

CHECKING NEUTRAL POSITION STEERING WHEEL

- Make sure that steering gear assembly, steering column assembly and steering wheel are installed in the correct position.
- Perform neutral position inspection after wheel alignment. Refer to RSU-2, "Precaution for Supplemental Restraint System (SRS) "AIR BAG" and "SEAT BELT PRE-TENSIONER"" .
- Set vehicle to the straight-ahead position and confirm steering wheel is in the neutral position.
- Loosen outer socket lock nut and turn inner socket to left and right equally to make fine adjustments if steering wheel is not in the neutral position.

CHECKING STEERING WHEEL TURNING FORCE

1. Park vehicle on a level and dry surface, set parking brake.
2. Start engine.
3. Check steering wheel turning force when steering wheel has been turned 360° from neutral position using suitable tool as shown.

   Steering wheel turning force : Less than 36 N (3.7 kg-f, 8.2 lb-f)

4. If steering wheel turning force is out of the specification, refer to STC-6, "How to Perform Trouble Diagnosis" .

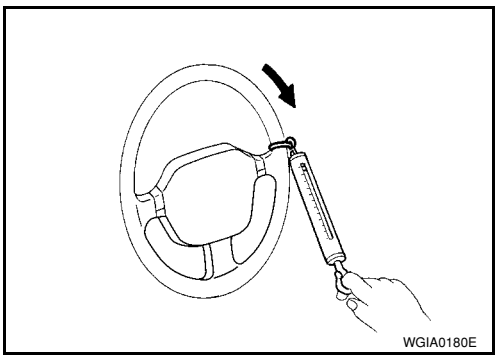

CHECKING FRONT WHEEL TURNING ANGLE

- Check front wheel turning angle after toe-in inspection. Place front wheels on turning radius gauges and rear wheels on stands. Check the maximum inner and outer wheel turning angles for LH and RH road wheels.

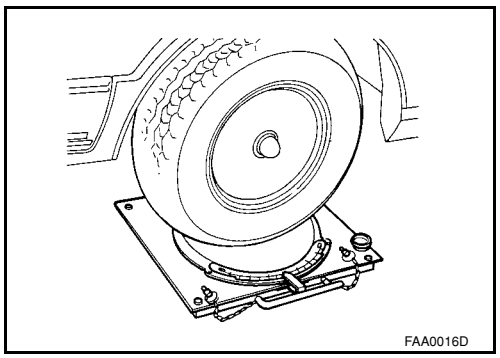

- With the engine at idle, turn steering wheel from full left stop to full right stop and measure the turning angles.

Inner wheel (Angle: A)	**Minimum**	**35° 00′ (35.0°)**
	Nominal	**38° 00′ (38.0°)**
	Maximum	**39° 00′ (39.0°)**
Outer wheel (Angle: B)		**33° 00′ (33.0°)**

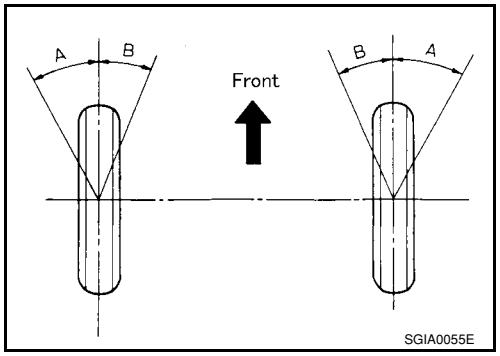

- Measure rack stroke if angles are outside the specified value.

Rack stroke "L" : 65.0 mm (2.559 in)

- Disassemble steering gear assembly to check the cause that rack stroke is outside of the standard.
- Steering angles are not adjustable. Check steering gear assembly, steering column assembly and front suspension components for wear or damage if any of the turning angles are different from the specified value. Replace any of them, if any non-standard condition exists.

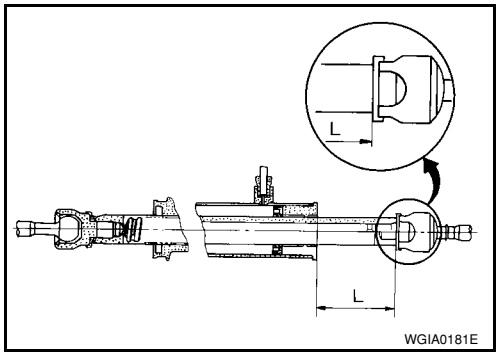

Removal and Installation

INFOID:0000000001703860

REMOVAL

NOTE:

When reconnecting spiral cable, secure cable with a tape so that case and rotating part keep aligned. This will omit neutral position alignment procedure during spiral cable installation.

1. Set front wheels to straight-ahead position.
2. Remove driver air bag module. Refer to SRS-33 .
3. Remove steering wheel lock nut after steering is locked.
4. Remove steering wheel.

INSTALLATION

Installation is in the reverse order of removal.

CAUTION:

Do not run spiral cable idle needlessly. And do not turn it more than necessary (or it leads to disconnection of the cable).

NOTE:

- The neutral position is set as follows.
  Turn the spiral cable clockwise to the end position. Then turn it counterclockwise (about 2 and half turns) and stop turning at the point on which the stopper insertion holes are in the same position (B). The service part is installed in the neutral position by the stopper and can be set without adjusting after the stopper is removed.
- Adjust the spiral cable locating pin (B) to the steering wheel locating pin hole (C).

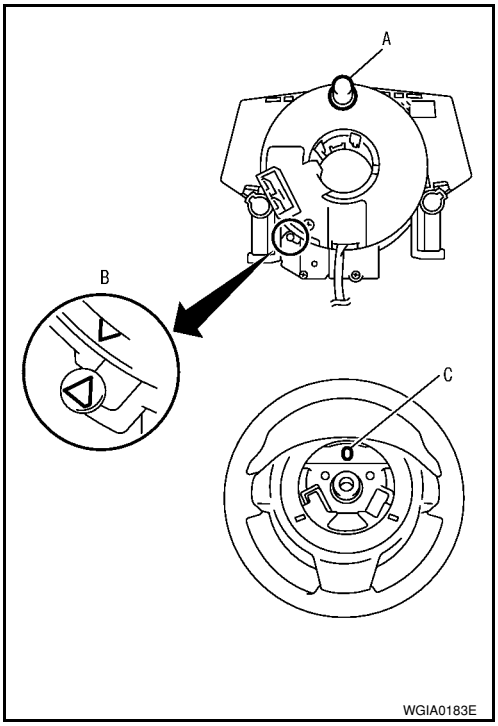

STEERING COLUMN

Removal and Installation

INFOID:0000000001703861

COMPONENT

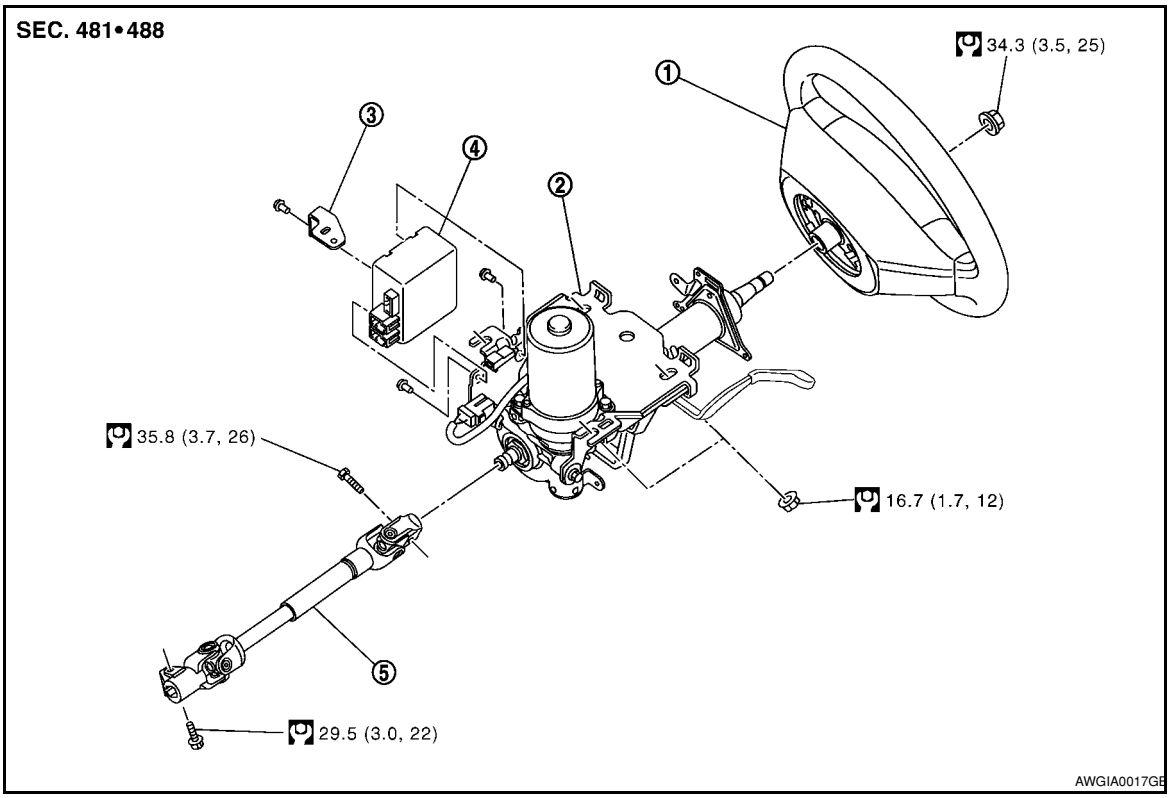

1.	Steering wheel	2.	Steering column assembly (with motor, reduction gear, sensor)	3.	Bracket
4.	EPS control unit	5.	Intermediate shaft		

CAUTION:

- **Do not allow axial impact to steering column assembly during removal and installation.**
- **Steering column must be kept at maximun tilt up position during removal and installation. Do not operate tilt mechanism while steering column is out of the vehicle.**
- **Put matching mark on intermediate shaft and steering column assembly before removing intermediate shaft.**
- **When steering wheel is turned repeatedly with the vehicle stopped, care must be taken because motor and EPS control unit may get too hot.**
- **Steering column assembly is heavy. Care must be taken when removing steering column assembly from vehicle.**
- **Do not put steering column assembly near the things that generate excessive magnetic force.**
- **Steering column assembly (with motor, reduction gear, sensor) cannot be disassembled.**

REMOVAL

1. Set front wheels to straight ahead-position.
2. Remove driver air bag module. Refer to SRS-33.
3. Remove steering wheel. Refer to PS-7, "Removal and Installation".
4. Remove steering column cover (upper and lower). Refer to IP-10, "Component Parts".
5. Remove combination switch and spiral cable. Refer to SRS-36.
6. Remove instrument lower finisher. Refer to IP-10, "Component Parts".
7. Disconnect each switch connector installed to steering column assembly, and then disconnect harness from steering column assembly.

8. Remove bolt of intermediate shaft (upper side), and then remove intermediate shaft from steering column assembly.
9. Remove steering column assembly mounting nuts, and then remove steering column assembly from vehicle.
10. Remove bolt of intermediate shaft (lower side), and then remove intermediate shaft from vehicle.
11. Remove screws of bracket and EPS control unit, and then remove bracket and EPS control unit from steering column assembly.

INSPECTION AFTER REMOVAL

- Check each part of steering column assembly, EPS control unit and intermediate shaft for damage and . replace as necessary.
- Measure the length “L” as shown, if vehicle has been involved in a minor collision. Replace steering column assembly (with motor, reduction gear, sensor) if outside the standard.

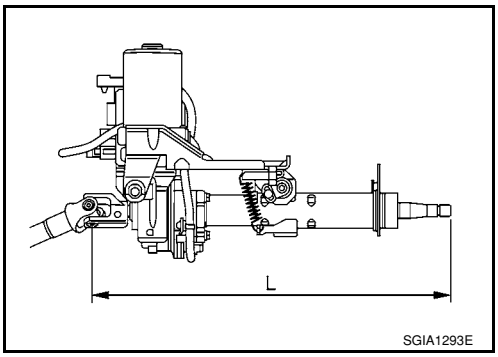

Steering column length “L”	**Minimum**	**462.1 mm (18.19 in)**
	Nominal	**464.1 mm (18.27 in)**
	Maximum	**466.1 mm (18.35 in)**

- Check tilt mechanism for damage or other malfunctions. Replace steering column assembly (with motor, reduction gear, sensor) as necessary.
- Measure steering column assembly rotating torque using Tool. Replace steering column assembly (with motor, reduction gear, sensor) if outside the standard.

Tool number : ST3127S000 (J-25742-1)

Rotating torque : 0 - 2.1 N·m (0 - 0.21 kg-m, 0 - 18 in-lb)

INSTALLATION

Installation is in the reverse order of removal.

- Installation is in the reverse order of removal. For tightening torque, refer to "COMPONENT".
- When tightening bolt (intermediate shaft lower side), tighten it by hand first, and make sure there is no feeling of sticking or galling before final tightening.

CAUTION:

Insert bolt in the proper direction. (Do not insert it from the other side.)

- When connecting intermediate shaft upper side (1) and column shaft, make sure the bolt is securely seated in groove (A) of column shaft (A) before final tightening.

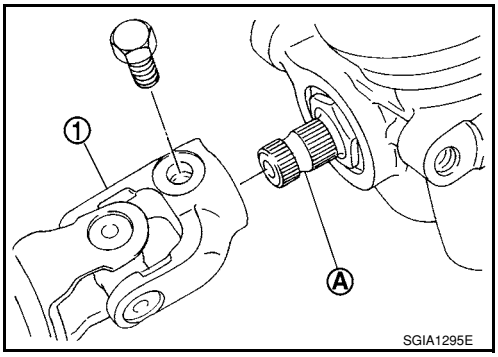

INSPECTION AFTER INSTALLATION

- Rotate steering wheel to check for decentered condition, binding, noise or excessive steering effort.
- After installing steering column assembly, perform self-diagnosis with CONSULT-II to ensure correct operation. Refer to STC-11, "CONSULT-III Function (EPS)".

- Check tilt mechanism operating range “L” as shown.

Tilt operating range “L” : 20 mm (0.79 in)

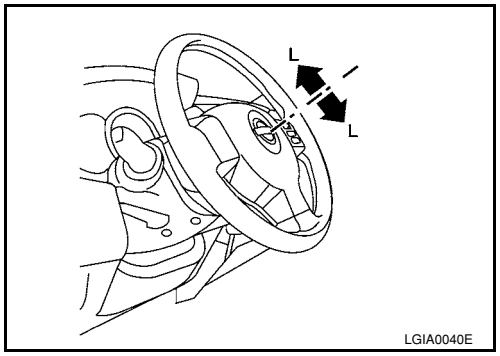

POWER STEERING GEAR

Removal and Installation

INFOID:0000000001703862

COMPONENT

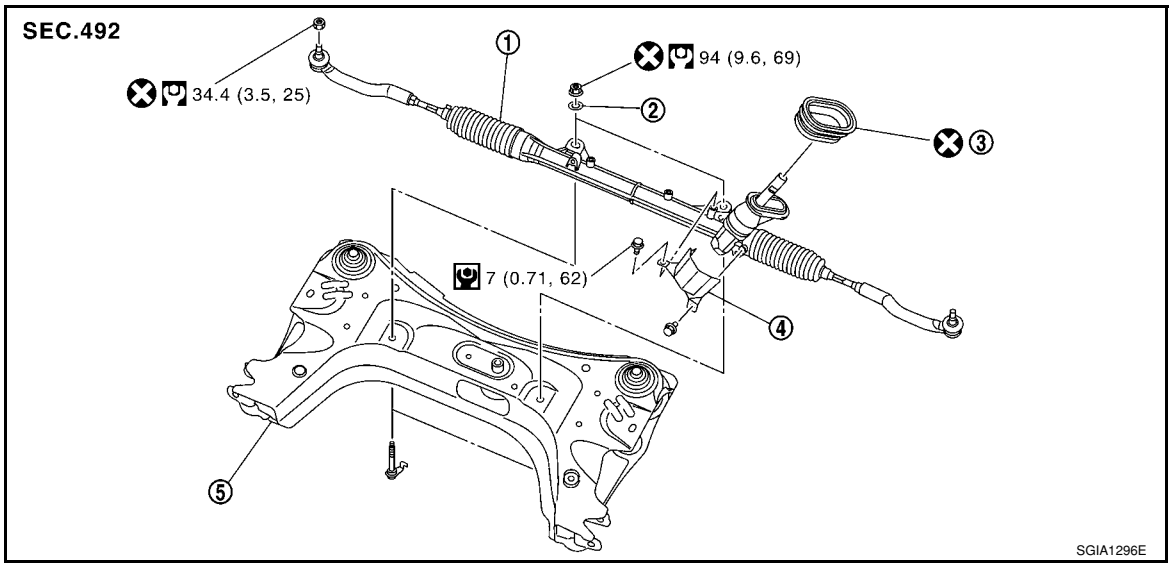

1. Steering gear assembly
2. Washer
3. Fire wall seal
4. Heat insulator
5. Front suspension member

Refer to GI-7 for the symbols.

CAUTION:
Spiral cable may be cut if steering wheel turns while separating steering column assembly and steering gear assembly. Be sure to secure steering wheel using string to avoid turning.

REMOVAL

1. Set vehicle to the straight-ahead position.
2. Remove bolt of intermediate shaft (lower side), and then remove intermediate shaft from steering gear pinion shaft.
3. Raise vehicle.
4. Remove tires from vehicle with a power tool.
5. Loosen steering outer socket (1) mounting nut.
6. Remove steering outer socket (1) from steering knuckle (2) so as not to damage ball joint boot (3) using the ball joint remover (suitable tool).
   CAUTION:
   Temporarily tighten the nut to prevent damage to threads and to prevent the ball joint remover (suitable tool) from suddenly coming off.

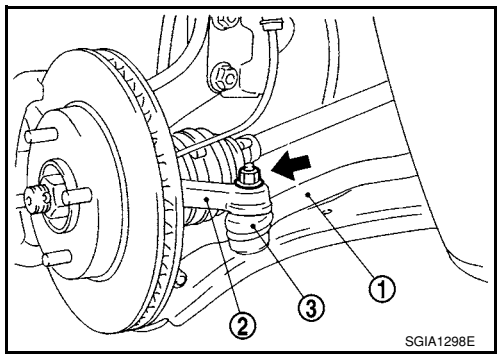

7. Remove front suspension member. Refer to FSU-10, "Removal and Installation".
8. Remove mounting bolts and nuts of steering gear assembly.

INSTALLATION

Installation is in the reverse order of removal.
- For tightening torque, refer to "COMPONENT" .
- Clean mounting surface on the body side of fire wall seal when installing steering gear assembly.

- Check wheel alignment under unladen conditions with tires on level ground. Refer to FSU-6, "Wheel Alignment Inspection".

INSPECTION AFTER INSTALLATION

Rotate steering wheel to check for decentered condition, binding, noise or excessive steering effort.

Disassembly and Assembly

INFOID:0000000001703863

COMPONENT (R24K TYPE)

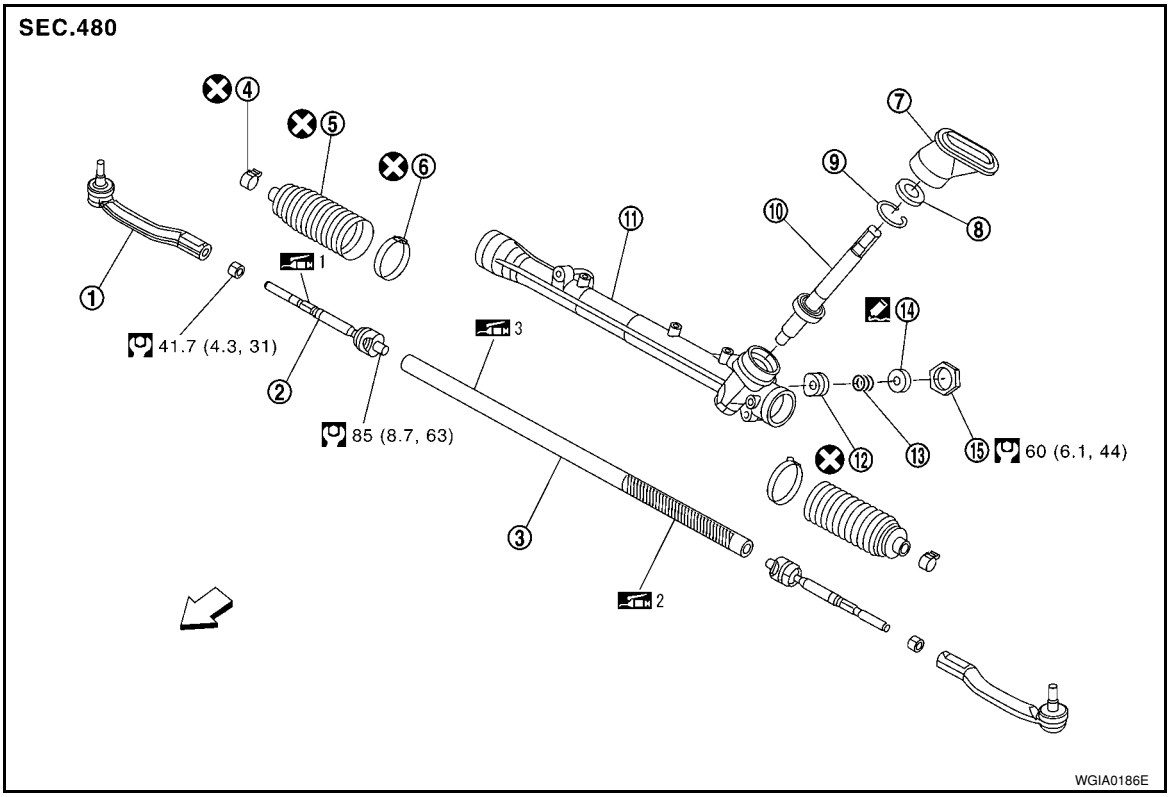

1.	Outer socket	2.	Inner socket	3.	Rack assembly
4.	Boot clamp (small diameter)	5.	Boot	6.	Boot clamp (large diameter)
7.	Joint cover	8.	Pinion seal	9.	Snap ring
10.	Pinion assembly	11.	Gear housing assembly	12.	Retainer
13.	Spring	14.	Adjusting screw	15.	Lock nut

⇐ : Front

Refer to GI-7 for the symbols unless shown below.

: Apply Genuine Thread Locking Sealant, Three Bound 1141 or equivalent.

:1 Apply Genuine Lithium Soap, Idemitsu Autorex A or equivalent.

:2 Apply Genuine Lithium Soap, Wanlouver MO No.2 (manufactured by Kyoudouyushi) or equivalent.

:3 Apply Genuine Lithium Soap, Multemp AC-P (manufactured by Kyoudouyushi) or equivalent.

CAUTION:
Clean steering gear assembly with kerosene before disassembling.

DISASSEMBLY

1. Loosen outer socket lock nut, and then remove outer socket from inner socket.
2. Remove boot clamp, and then remove boot from inner socket.
   CAUTION:
   Do not damage inner socket and gear housing assembly when removing boot. Inner socket and gear housing assembly must be replaced if inner socket and gear housing assembly are damaged because it may allow foreign material to enter.

3. Remove inner socket from rack assembly while holding the flat portion of the rack next to the inner socket using a suitable tool.
4. Measure adjusting screw height “H”, and loosen lock nut (2).
5. Remove adjusting screw (1), retainer (3) and spring (4) from gear housing assembly (5).

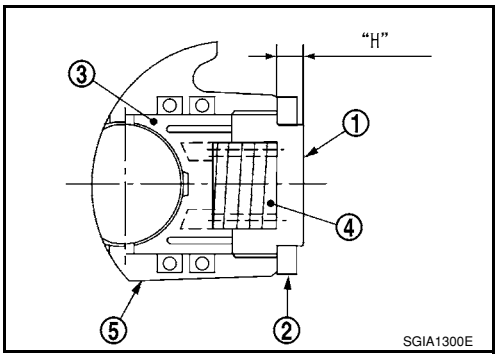

INSPECTION AFTER DISASSEMBLY

Joint Cover
Check joint cover protrusion for damage. Replace if there are.

Rack and Pinion Assembly
- Check pinion assembly for damage or wear. Replace as necessary.
- Rotate pinion assembly and check for torque variation or rattle. Replace steering gear as necessary.

Gear Housing Assembly
Check gear housing assembly for damage or scratches. Replace steering gear as necessary.

Outer Socket and Inner Socket

1. Check ball joint swinging torque.
   - Hook a spring balance at the point shown and pull the spring balance. Make sure that the spring balance reads the specified value when ball stud and inner socket start to move. Replace outer socket and inner socket if they are outside the standard.

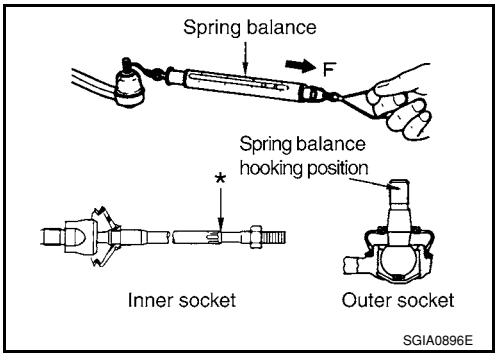

Items	Outer socket	Inner socket
Measuring point of spring balance	**Ball stud upper side**	**Measuring point at * mark shown in the figure**
Swinging torque	**0.3 - 2.9 N·m (0.03 - 0.29 kg-m, 3.0 - 25 in-lb)**	**0.5 - 5.0 N·m (0.06 - 0.51 kg-m, 5 - 44 in-lb)**
Spring balance measurement	**6.0 - 58 N (0.61 - 5.91 kg-f, 1.35 - 13.03 lb-f)**	**4.3 - 43.5 N (0.44 - 4.44 kg-f, 0.97 - 9.79 lb-f)**

2. Ball joint axial end play

- Apply an axial load of 490 N (50 kg-f, 111 lb-f) to ball stud using a dial gauge. Measure amount of stud movement, and then make sure that the value is within the specified range. Replace outer socket and inner socket if the measured value is outside the standard.

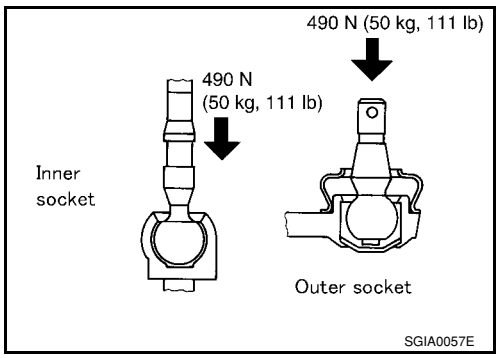

Outer socket	**0.5 mm (0.020 in) or less**
Inner socket	**0.2 mm (0.008 in) or less**

ASSEMBLY

1. Apply recommended grease to teeth part and bush part of rack assembly, if necessary.
2. Apply recommended grease to back of rack assembly, if necessary.
3. Install inner socket to rack assembly. Torque to specified value while holding the flat portion of the rack next to the inner socket using a suitable tool.
4. Apply recommended grease to inner socket. For application points, refer to "COMPONENT (R24K TYPE)" .
5. Decide on the neutral position for the rack assembly.

Rack stroke "L" : 65.0 mm (2.559 in)

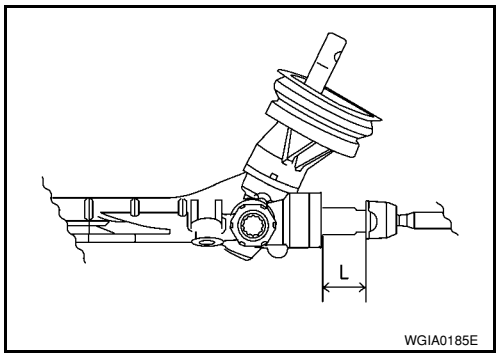

6. Apply recommended grease to around retainer (3), then install retainer (3), spring (4) and adjusting screw (1) to gear housing assembly (5).
7. Apply recommended thread locking sealant to the thread (2 turns thread), and then screw in the adjusting screw (1) until it reaches height "H" from gear housing assembly (5) measured before disassembling.
8. Tighten lock nut to (2) the specified torque securing it to prevent adjusting screw (1) from freewheeling condition.
9. Move rack assembly 10 strokes throughout the full stroke so that the parts can fit with each other.

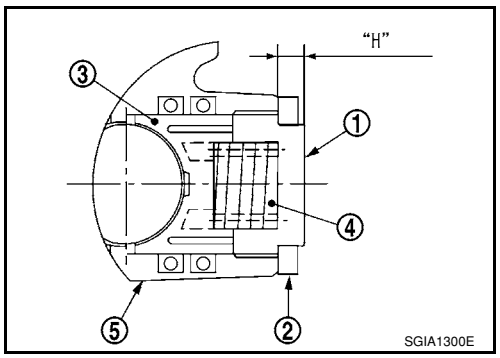

10. Using Tools A and B, measure rotating torque of pinion assembly. If the measurement is outside of the specified range, readjust pinion rotating torque. If the measurement is outside of the specified range for readjust, replace steering gear assembly.

Tool numbers A: ST3127S000 (J-25742-1)
B: KV48103400 (—)

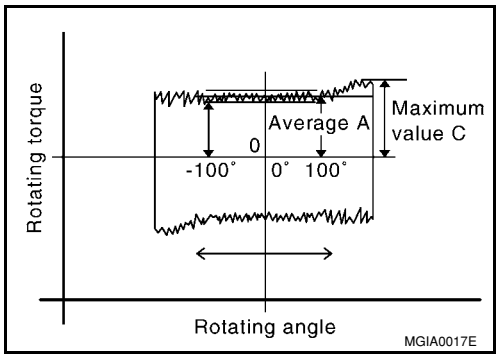

Pinion rotating torque standard	
Around neutral position (within±100°) Average A	**0.3 - 1.5 N·m (0.03 - 0.15 kg-m, 3 - 13 in-lb)**
Maximum variation C	**1.86 N·m (0.19 kg-m, 16 in-lb)**

11. Set dial gauge to the back of rack assembly on the pinion assembly side around the center of stroke. Measure displacement of rack under torsional torque of ± 7.8 N·m (0.80 kg-m, 69 in-lb), and then check if it is within the standard value. If the measurement is outside the standard value, adjust it again. After the readjustment, if measurement is still outside the standard value, replace steering gear assembly.

Standard value : Less than 0.1 mm (0.004 in)

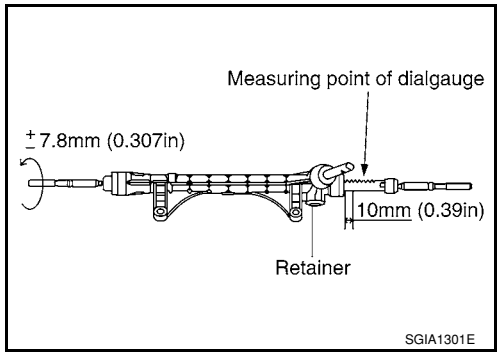

12. Install boot to gear housing assembly and inner socket.

13. Install boot clamp (1) to boot using Tool.
NOTE:
Install large diameter side boot clamp (1) securely to boot groove, and crimp it so as to have clearance of 3 mm (0.12 in) or less as shown.

Tool number : KV40107300 (—)

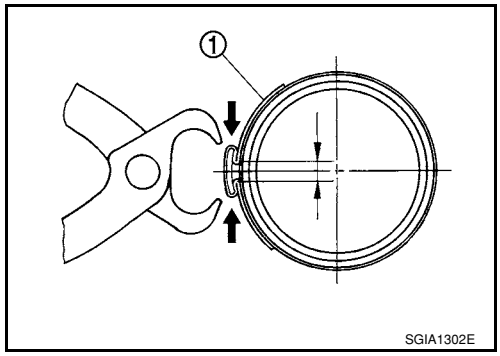

14. Install joint cover (1) to gear housing assembly (2).
CAUTION:
Install joint cover so that the protrusion for locating is securely set to gear housing groove.

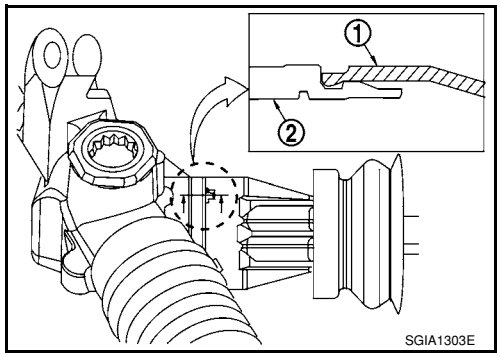

15. Adjust inner socket to standard length “L”, and then tighten lock nut to the specified torque. Refer to "COMPONENT (R24K TYPE)". Check length of inner socket “L” again after tightening lock nut. Make sure that the length is the standard.

Inner socket length “L” : 57.8 mm (2.276 in)

CAUTION:
Adjust toe-in. Refer to FSU-6, "Wheel Alignment Inspection". Length achieved after toe-in adjustment is not necessarily the above value.

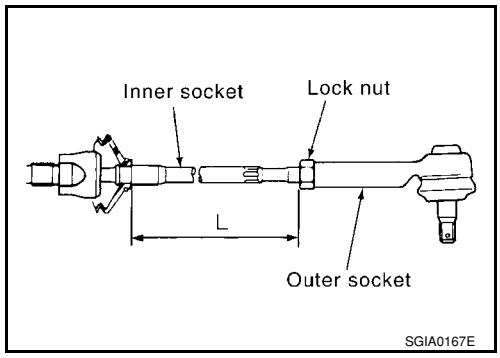

SERVICE DATA AND SPECIFICATIONS (SDS)

Steering Wheel

INFOID:0000000001703864

Steering wheel axial end play	0 mm (0 in)
Steering wheel play	0 - 35 mm (0 - 1.38 in)
Steering wheel turning force	Less than 36 N (3.7 kg-f, 8.2 lb-f)

Steering Angle

INFOID:0000000001703865

Inner wheel Degree minute (Decimal degree)	Minimum	35° 00′ (35.0°)
	Nominal	38° 00′ (38.0°)
	Maximum	39° 00′ (39.0°)
Outer wheel Degree minute (Decimal degree)		33° 00′ (33.0°)

Steering Column

INFOID:0000000001703866

Steering column length “L”	Minimum	462.1 mm (18.19 in)
	Nominal	464.1 mm (18.27 in)
	Maximum	466.1 mm (18.35 in)

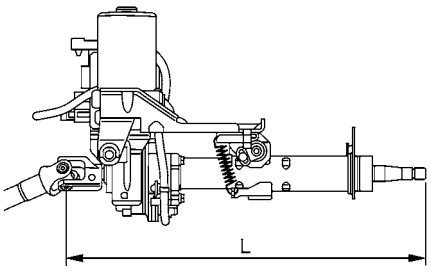

SGIA1293E

Steering column assembly rotating torque	0 - 2.1 N·m (0 - 0.21 kg-m, 0 - 18 in-lb)
Tilt operating range	20 mm (0.79 in)

Steering Outer Socket and Inner Socket

INFOID:0000000001703867

Steering gear type		R24K
Outer socket ball stud	Swinging torque	0.3 - 2.9 N·m (0.03 - 0.29 kg-m, 3.0 - 25 in-lb)
	Measurement on spring balance Measuring point: ball stud upper side	6.0 - 58 N (0.61 - 5.91 kg-f, 1.35 - 13.03 lb-f)
	Axial end play	0.5 mm (0.020 in) or less
Inner socket ball joint	Swinging torque	0.5 - 5.0 N·m (0.06 - 0.51 kg-m, 5 - 44 in-lb)
	• Measurement on spring balance • Measuring point at *mark shown	4.3 - 43.5 N (0.44 - 4.44 kg-f, 0.97 - 9.79 lb-f)
	Axial end play	0.2 mm (0.008 in) or less

Steering gear type	R24K
Inner socket length “L”	57.8 mm (2.276 in)

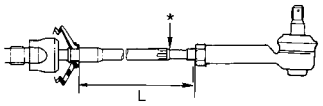

SGIA0950E

Steering Gear

INFOID:0000000001703868

Steering gear model	R24K
Rack neutral position, dimension “L” (rack stroke)	65.0 mm (2.559 in)

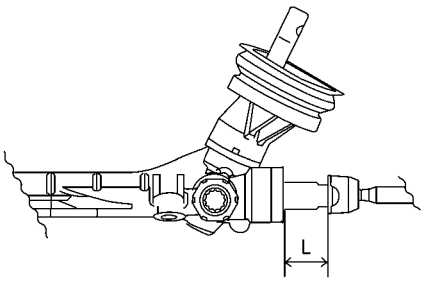

WGIA0185E

Pinion rotating torque standard	Around neutral position (within ± 100°) Average A	0.3 - 1.5 N·m (0.03 - 0.15 kg-m, 3 - 13 in-lb)
	Maximum variation C	1.86 N·m (0.19 kg-m, 16 in-lb)

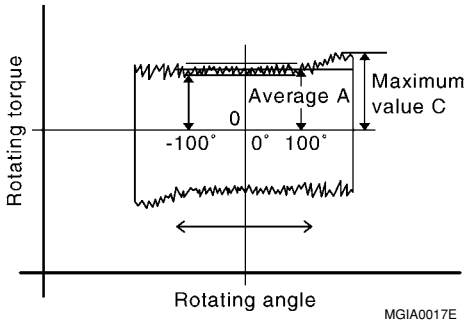

MGIA0017E

SECTION RAX
REAR AXLE

CONTENTS

SERVICE INFORMATION 2

PREPARATION 2
Commercial Service Tool 2

NOISE, VIBRATION AND HARSHNESS (NVH) TROUBLESHOOTING 3
NVH Troubleshooting Chart 3

WHEEL HUB 4
On-Vehicle Inspection and Service 4
Removal and Installation 4

SERVICE DATA AND SPECIFICATIONS (SDS) 6
Wheel Bearing 6

SERVICE INFORMATION

PREPARATION

Commercial Service Tool

INFOID:0000000001703710

Tool name	Description
Power tool 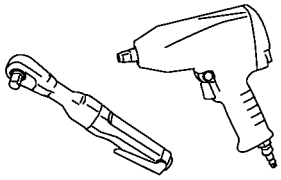 PBIC0190E	Removing wheel nuts

NOISE, VIBRATION AND HARSHNESS (NVH) TROUBLESHOOTING

NVH Troubleshooting Chart

INFOID:0000000001703711

Use chart below to help you find the cause of the symptom. If necessary, repair or replace these parts.

Reference page			RAX-4	—	RAX-4	RSU-4, "NVH Troubleshooting Chart"	WT-4, "NVH Troubleshooting Chart"	WT-4, "NVH Troubleshooting Chart"	BR-4, "NVH Troubleshooting Chart"	PS-5, "NVH Troubleshooting Chart"
Possible cause and SUSPECTED PARTS			Improper installation, looseness	Parts interference	Wheel bearing damage	REAR SUSPENSION	TIRES	ROAD WHEEL	BRAKES	STEERING
Symptom	REAR AXLE	Noise	×	×		×	×	×	×	×
		Shake	×	×		×	×	×	×	×
		Vibration	×	×		×	×			×
		Shimmy	×	×		×	×	×	×	×
		Shudder	×			×	×	×	×	×
		Poor quality ride or handling	×	×	×	×	×	×		

×: Applicable

WHEEL HUB

On-Vehicle Inspection and Service

INFOID:0000000001703712

- Check the axle and suspension parts for excessive play, wear, or damage.
- Shake each rear wheel to check for excessive play as shown.

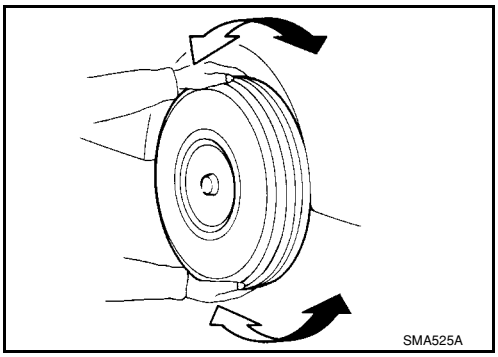

REAR WHEEL BEARING INSPECTION

- Move wheel hub and bearing assembly in the axial direction by hand. Make sure the axial end play is within specification.

Axial end play : 0.05 mm (0.002 in) or less

- Check that the wheel hub bearing operates smoothly.
- Replace the wheel hub assembly if the axial end play exceeds specification, or if the wheel bearing does not turn smoothly. Refer to RAX-4, "Removal and Installation".

CAUTION:
The wheel hub assembly does not require maintenance. If any of the following symptoms are noted, replace the wheel hub assembly.
- **Growling noise is emitted from the wheel hub bearing during operation.**
- **Wheel hub bearing drags or turns roughly.**

Removal and Installation

INFOID:0000000001703713

COMPONENTS

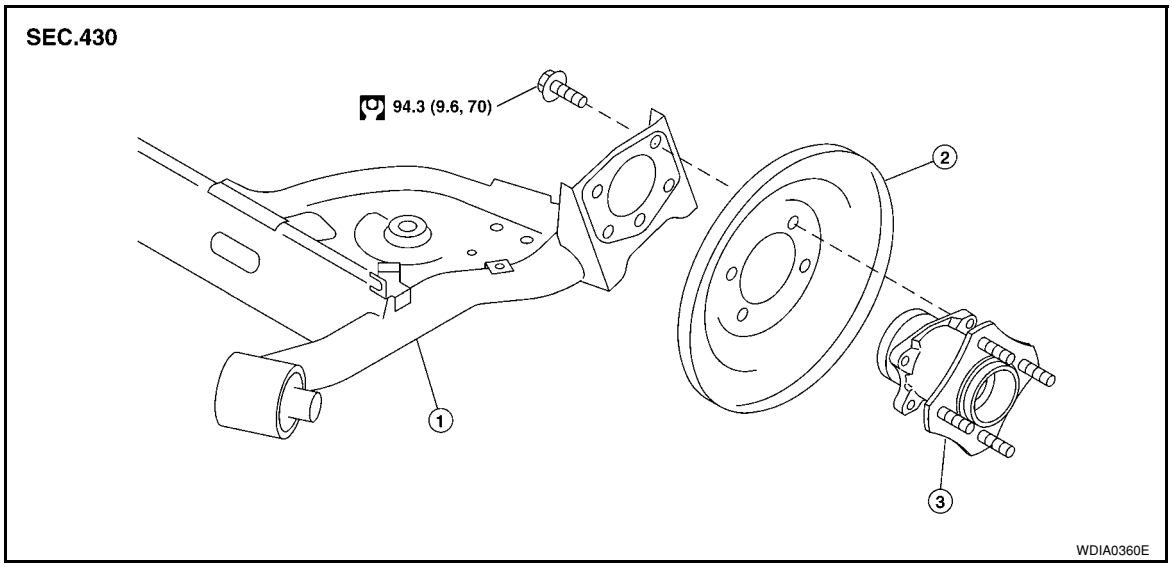

1. Rear suspension beam
2. Back plate
3. Wheel hub and bearing assembly

REMOVAL

1. Remove tires from vehicle using power tool.
2. Remove wheel sensor from wheel hub and bearing assembly. Refer to BRC-32.
   CAUTION:

Do not pull on wheel sensor harness.

3. Remove the drum brake assembly. Refer to BR-29, "Removal and Installation of Drum Brake Assembly".
4. Remove wheel hub and bearing assembly bolts, and then remove wheel hub and bearing assembly from vehicle.
5. If necessary remove back plate, following procedure.
   1. Remove parking brake rear cable from back plate. Refer to PB-4.
   2. Separate brake tube from wheel cylinder. Refer to BR-10.

INSPECTION AFTER REMOVAL

Check for any deformity, cracks, or other damage on the wheel hub assembly, replace if necessary.

CAUTION:

The wheel hub assembly does not require maintenance. If any of the following symptoms are noted, replace the wheel hub assembly.

- **Growling noise is emitted from the wheel hub bearing during operation.**
- **Wheel hub bearing drags or turns roughly.**

INSTALLATION

Installation is in the reverse order of removal.

SERVICE DATA AND SPECIFICATIONS (SDS)

Wheel Bearing

INFOID:0000000001703714

Axial end play	0.05 mm (0.002 in) or less

SECTION RF
ROOF

CONTENTS

PRECAUTION 2

PRECAUTIONS 2
Precaution for Supplemental Restraint System (SRS) "AIR BAG" and "SEAT BELT PRE-TENSIONER" 2
Precaution 2

PREPARATION 3

PREPARATION 3
Commercial Service Tool 3

SYMPTOM DIAGNOSIS 4

SQUEAK AND RATTLE TROUBLE DIAGNOSES 4
Work Flow 4
Generic Squeak and Rattle Troubleshooting 6
Diagnostic Worksheet 8

FUNCTION DIAGNOSIS 10

TROUBLE DIAGNOSIS 10
Component Parts and Harness Connector Location 10
System Description 10
CAN Communication System Description 12
Wiring Diagram - SROOF - 13
Terminal and Reference Value for BCM 14
Terminal and Reference Value for Sunroof Motor Assembly 15
Work Flow 15
CONSULT-III Function (BCM) 15
Work Support 16
Active Test 16
Data Monitor 16
Trouble Diagnosis Chart by Symptom 16
BCM Power Supply and Ground Circuit Inspection 16
Sunroof Switch System Inspection 16
Sunroof Motor Assembly Power Supply and Ground Circuit Inspection 18
Door Switch Check 19

ON-VEHICLE REPAIR 21

SUNROOF 21
Removal and Installation 21
Fitting Adjustment 26
Inspection 27

PRECAUTION

PRECAUTIONS

Precaution for Supplemental Restraint System (SRS) "AIR BAG" and "SEAT BELT PRE-TENSIONER"

INFOID:0000000001704185

The Supplemental Restraint System such as “AIR BAG” and “SEAT BELT PRE-TENSIONER”, used along with a front seat belt, helps to reduce the risk or severity of injury to the driver and front passenger for certain types of collision. This system includes seat belt switch inputs and dual stage front air bag modules. The SRS system uses the seat belt switches to determine the front air bag deployment, and may only deploy one front air bag, depending on the severity of a collision and whether the front occupants are belted or unbelted.
Information necessary to service the system safely is included in the SR and SB section of this Service Manual.

WARNING:

- **To avoid rendering the SRS inoperative, which could increase the risk of personal injury or death in the event of a collision which would result in air bag inflation, all maintenance must be performed by an authorized NISSAN/INFINITI dealer.**
- **Improper maintenance, including incorrect removal and installation of the SRS, can lead to personal injury caused by unintentional activation of the system. For removal of Spiral Cable and Air Bag Module, see the SR section.**
- **Do not use electrical test equipment on any circuit related to the SRS unless instructed to in this Service Manual. SRS wiring harnesses can be identified by yellow and/or orange harnesses or harness connectors.**

Precaution

INFOID:0000000001704186

- Disconnect both battery cables in advance.
- Do not tamper with or force air bag lid open, as this may adversely affect air bag performance.
- Be careful not to scratch pad and other parts.
- When removing or disassembling any part, be careful not to damage or deform it. Protect parts which may get in the way with cloth.
- When removing parts with a screwdriver or other tool, protect parts by wrapping them with vinyl or tape.
- Keep removed parts protected with cloth.
- If a clip is deformed or damaged, replace it.
- If an unreusable part is removed, replace it with a new one.
- Tighten bolts and nuts firmly to the specified torque.
- After re-assembly has been completed, make sure each part functions correctly.
- Remove stains in the following way.

Water-soluble stains:
Dip a soft cloth in warm water, and then squeeze it tightly. After wiping the stain, wipe with a soft dry cloth.
Oil stain:
Dissolve a synthetic detergent in warm water (density of 2 to 3% or less), dip the cloth, then clean off the stain with the cloth. Next, dip the cloth in fresh water and squeeze it tightly. Then clean off the detergent completely. Then wipe the area with a soft dry cloth.

- Do not use any organic solvent, such as thinner or benzine.

PREPARATION

PREPARATION

Commercial Service Tool

INFOID:0000000001704187

Tool name	Description
Engine ear 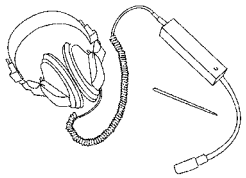 SIIA0995E	Locating the noise

SYMPTOM DIAGNOSIS

SQUEAK AND RATTLE TROUBLE DIAGNOSES

Work Flow

INFOID:0000000001704188

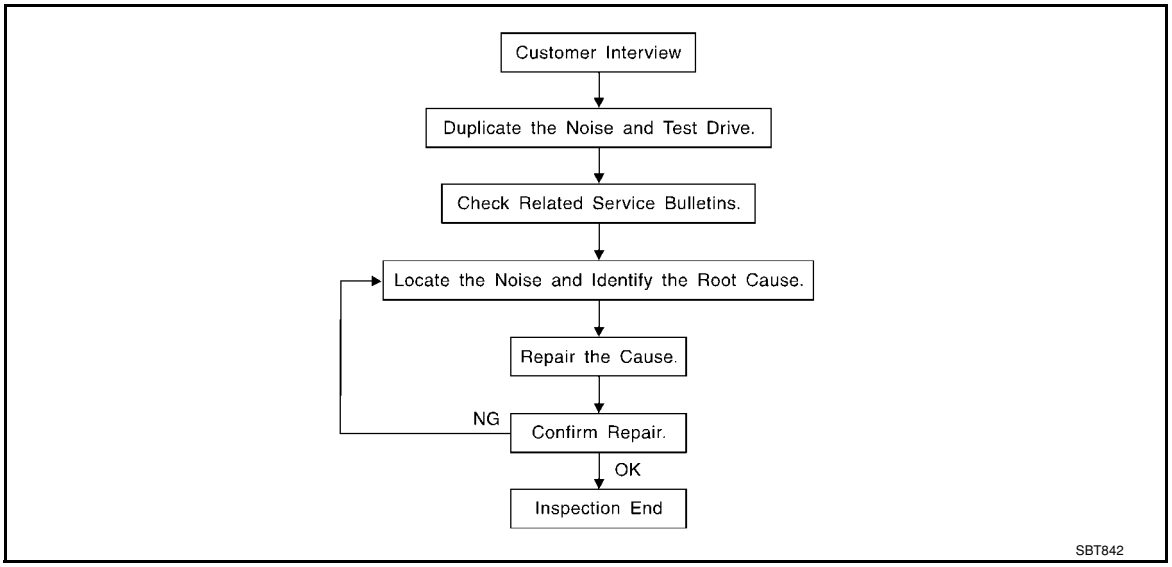

CUSTOMER INTERVIEW

Interview the customer if possible, to determine the conditions that exist when the noise occurs. Use the Diagnostic Worksheet during the interview to document the facts and conditions when the noise occurs and any customer's comments; refer to IP-8, "Diagnostic Worksheet". This information is necessary to duplicate the conditions that exist when the noise occurs.

- The customer may not be able to provide a detailed description or the location of the noise. Attempt to obtain all the facts and conditions that exist when the noise occurs (or does not occur).
- If there is more than one noise in the vehicle, be sure to diagnose and repair the noise that the customer is concerned about. This can be accomplished by test driving the vehicle with the customer.
- After identifying the type of noise, isolate the noise in terms of its characteristics. The noise characteristics are provided so the customer, service adviser and technician are all speaking the same language when defining the noise.
- Squeak —(Like tennis shoes on a clean floor)
  Squeak characteristics include the light contact/fast movement/brought on by road conditions/hard surfaces = higher pitch noise/softer surfaces = lower pitch noises/edge to surface = chirping
- Creak—(Like walking on an old wooden floor)
  Creak characteristics include firm contact/slow movement/twisting with a rotational movement/pitch dependent on materials/often brought on by activity.
- Rattle—(Like shaking a baby rattle)
  Rattle characteristics include the fast repeated contact/vibration or similar movement/loose parts/missing clip or fastener/incorrect clearance.
- Knock —(Like a knock on a door)
  Knock characteristics include hollow sounding/sometimes repeating/often brought on by driver action.
- Tick—(Like a clock second hand)
  Tick characteristics include gentle contacting of light materials/loose components/can be caused by driver action or road conditions.
- Thump—(Heavy, muffled knock noise)
  Thump characteristics include softer knock/dead sound often brought on by activity.
- Buzz—(Like a bumble bee)
  Buzz characteristics include high frequency rattle/firm contact.
- Often the degree of acceptable noise level will vary depending upon the person. A noise that you may judge as acceptable may be very irritating to the customer.
- Weather conditions, especially humidity and temperature, may have a great effect on noise level.

DUPLICATE THE NOISE AND TEST DRIVE

If possible, drive the vehicle with the customer until the noise is duplicated. Note any additional information on the Diagnostic Worksheet regarding the conditions or location of the noise. This information can be used to duplicate the same conditions when you confirm the repair.
If the noise can be duplicated easily during the test drive, to help identify the source of the noise, try to duplicate the noise with the vehicle stopped by doing one or all of the following:
1) Close a door.
2) Tap or push/pull around the area where the noise appears to be coming from.
3) Rev the engine.
4) Use a floor jack to recreate vehicle “twist”.
5) At idle, apply engine load (electrical load, half-clutch on M/T model, drive position on A/T model).
6) Raise the vehicle on a hoist and hit a tire with a rubber hammer.

- Drive the vehicle and attempt to duplicate the conditions the customer states exist when the noise occurs.
- If it is difficult to duplicate the noise, drive the vehicle slowly on an undulating or rough road to stress the vehicle body.

CHECK RELATED SERVICE BULLETINS

After verifying the customer concern or symptom, check ASIST for Technical Service Bulletins (TSBs) related to that concern or symptom.
If a TSB relates to the symptom, follow the procedure to repair the noise.

LOCATE THE NOISE AND IDENTIFY THE ROOT CAUSE

1. Narrow down the noise to a general area. To help pinpoint the source of the noise, use a listening tool (Engine Ear or mechanics stethoscope).
2. Narrow down the noise to a more specific area and identify the cause of the noise by:

- removing the components in the area that you suspect the noise is coming from.
  Do not use too much force when removing clips and fasteners, otherwise clips and fastener can be broken or lost during the repair, resulting in the creation of new noise.
- tapping or pushing/pulling the component that you suspect is causing the noise.
  Do not tap or push/pull the component with excessive force, otherwise the noise will be eliminated only temporarily.
- feeling for a vibration with your hand by touching the component(s) that you suspect is (are) causing the noise.
- placing a piece of paper between components that you suspect are causing the noise.
- looking for loose components and contact marks.
  Refer to RF-6, "Generic Squeak and Rattle Troubleshooting".

REPAIR THE CAUSE

- If the cause is a loose component, tighten the component securely.
- If the cause is insufficient clearance between components:
- separate components by repositioning or loosening and retightening the component, if possible.
- insulate components with a suitable insulator such as urethane pads, foam blocks, felt cloth tape or urethane tape are available through your authorized Nissan Parts Department.

CAUTION:
Do not use excessive force as many components are constructed of plastic and may be damaged.
NOTE:
Always check with the Parts Department for the latest parts information.
Each item can be ordered separately as needed.
URETHANE PADS [1.5 mm (0.059 in) thick]
Insulates connectors, harness, etc.
76268-9E005: 100 × 135 mm (3.94 × 5.31 in)/76884-71L01: 60 × 85 mm (2.36 × 3.35 in)/76884-71L02: 15 × 25 mm (0.59 × 0.98 in)
INSULATOR (Foam blocks)
Insulates components from contact. Can be used to fill space behind a panel.
73982-9E000: 45 mm (1.77 in) thick, 50 × 50 mm (1.97 × 1.97 in)/73982-50Y00: 10 mm (0.39 in) thick, 50 × 50 mm (1.97 × 1.97 in)
INSULATOR (Light foam block)
80845-71L00: 30 mm (1.18 in) thick, 30 × 50 mm (1.18 × 1.97 in)
FELT CLOTH TAPE
Used to insulate where movement does not occur. Ideal for instrument panel applications.
68370-4B000: 15 × 25 mm (0.59 × 0.98 in) pad/68239-13E00: 5 mm (0.20 in) wide tape roll

The following materials, not available through NISSAN Parts Department, can also be used to repair squeaks and rattles.
UHMW(TEFLON) TAPE
Insulates where slight movement is present. Ideal for instrument panel applications.
SILICONE GREASE
Used in place of UHMW tape that will be visible or not fit.
Note: Will only last a few months.
SILICONE SPRAY
Use when grease cannot be applied.
DUCT TAPE
Use to eliminate movement.

CONFIRM THE REPAIR

Confirm that the cause of a noise is repaired by test driving the vehicle. Operate the vehicle under the same conditions as when the noise originally occurred. Refer to the notes on the Diagnostic Worksheet.

Generic Squeak and Rattle Troubleshooting

INFOID:0000000001704189

Refer to Table of Contents for specific component removal and installation information.

INSTRUMENT PANEL

Most incidents are caused by contact and movement between:

1. The cluster lid A and instrument panel
2. Acrylic lens and combination meter housing
3. Instrument panel to front pillar garnish
4. Instrument panel to windshield
5. Instrument panel pins
6. Wiring harnesses behind the combination meter
7. A/C defroster duct and duct joint

These incidents can usually be located by tapping or moving the components to duplicate the noise or by pressing on the components while driving to stop the noise. Most of these incidents can be repaired by applying felt cloth tape or silicone spray (in hard to reach areas). Urethane pads can be used to insulate wiring harness.

CAUTION:
Do not use silicone spray to isolate a squeak or rattle. If you saturate the area with silicone, you will not be able to recheck the repair.

CENTER CONSOLE

Components to pay attention to include:

1. Shifter assembly cover to finisher
2. A/C control unit and cluster lid C
3. Wiring harnesses behind audio and A/C control unit

The instrument panel repair and isolation procedures also apply to the center console.

DOORS

Pay attention to the:

1. Finisher and inner panel making a slapping noise
2. Inside handle escutcheon to door finisher
3. Wiring harnesses tapping
4. Door striker out of alignment causing a popping noise on starts and stops

Tapping or moving the components or pressing on them while driving to duplicate the conditions can isolate many of these incidents. You can usually insulate the areas with felt cloth tape or insulator foam blocks from the NISSAN Squeak and Rattle Kit (J-43980) to repair the noise.

TRUNK

Trunk noises are often caused by a loose jack or loose items put into the trunk by the owner.
In addition look for:

1. Trunk lid bumpers out of adjustment

2. Trunk lid striker out of adjustment
3. The trunk lid torsion bars knocking together
4. A loose license plate or bracket

Most of these incidents can be repaired by adjusting, securing or insulating the item(s) or component(s) causing the noise.

SUNROOF/HEADLINING

Noises in the sunroof/headlining area can often be traced to one of the following:

1. Sunroof lid, rail, linkage or seals making a rattle or light knocking noise
2. Sun visor shaft shaking in the holder
3. Front or rear windshield touching headliner and squeaking

Again, pressing on the components to stop the noise while duplicating the conditions can isolate most of these incidents. Repairs usually consist of insulating with felt cloth tape.

OVERHEAD CONSOLE (FRONT AND REAR)

Overhead console noises are often caused by the console panel clips not being engaged correctly. Most of these incidents are repaired by pushing up on the console at the clip locations until the clips engage.
In addition look for:

1. Loose harness or harness connectors.
2. Front console map/reading lamp lens loose.
3. Loose screws at console attachment points.

SEATS

When isolating seat noise it's important to note the position the seat is in and the load placed on the seat when the noise is present. These conditions should be duplicated when verifying and isolating the cause of the noise.
Cause of seat noise include:

1. Headrest rods and holder
2. A squeak between the seat pad cushion and frame
3. The rear seatback lock and bracket

These noises can be isolated by moving or pressing on the suspected components while duplicating the conditions under which the noise occurs. Most of these incidents can be repaired by repositioning the component or applying urethane tape to the contact area.

UNDERHOOD

Some interior noise may be caused by components under the hood or on the engine wall. The noise is then transmitted into the passenger compartment.
Causes of transmitted underhood noise include:

1. Any component installed on the engine wall
2. Components that pass through the engine wall
3. Engine wall mounts and connectors
4. Loose radiator pins
5. Hood bumpers out of adjustment
6. Hood striker out of adjustment

These noises can be difficult to isolate since they cannot be reached from the interior of the vehicle. The best method is to secure, move or insulate one component at a time and test drive the vehicle. Also, engine RPM or load can be changed to isolate the noise. Repairs can usually be made by moving, adjusting, securing, or insulating the component causing the noise.

Diagnostic Worksheet

INFOID:0000000001704190

Dear Customer:
We are concerned about your satisfaction with your vehicle. Repairing a squeak or rattle sometimes can be very difficult. To help us fix your vehicle right the first time, please take a moment to note the area of the vehicle where the squeak or rattle occurs and under what conditions. You may be asked to take a test drive with a service advisor or technician to ensure we confirm the noise you are hearing.

SQUEAK & RATTLE DIAGNOSTIC WORKSHEET

I. WHERE DOES THE NOISE COME FROM? (circle the area of the vehicle)
The illustrations are for reference only, and may not reflect the actual configuration of your vehicle.

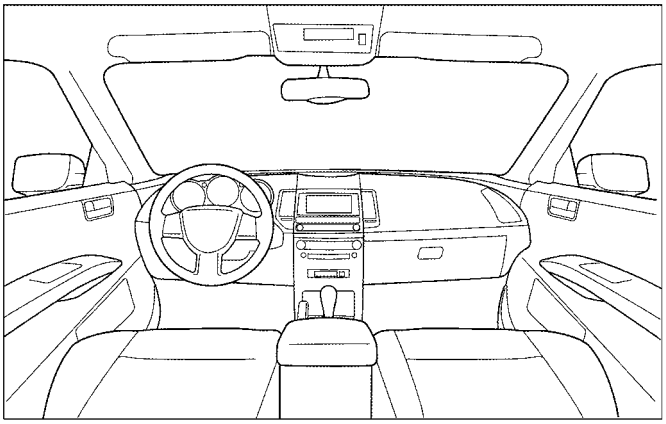

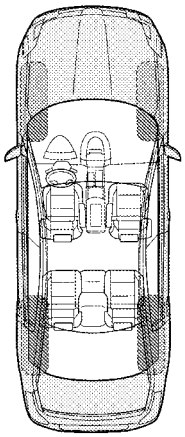

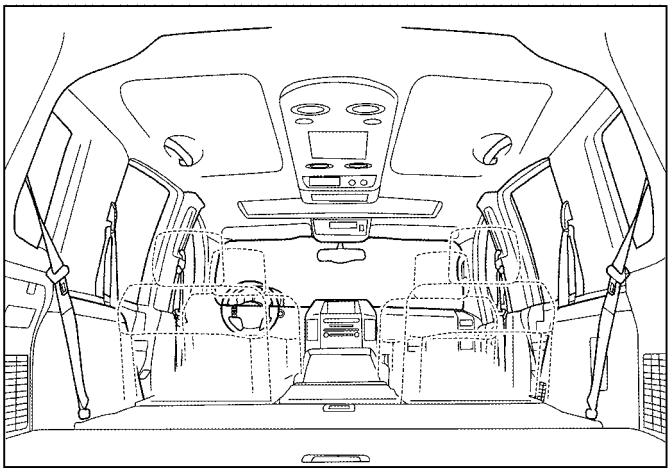

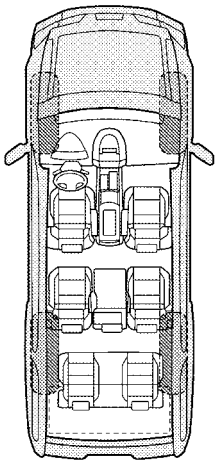

Continue to page 2 of the worksheet and briefly describe the location of the noise or rattle. In addition, please indicate the conditions which are present when the noise occurs.

-1-

LAIA0072E

SQUEAK & RATTLE DIAGNOSTIC WORKSHEET - page 2

Briefly describe the location where the noise occurs:

_____

_____

II. WHEN DOES IT OCCUR? (please check the boxes that apply)

- ☐ Anytime
- ☐ 1st time in the morning
- ☐ Only when it is cold outside
- ☐ Only when it is hot outside
- ☐ After sitting out in the rain
- ☐ When it is raining or wet
- ☐ Dry or dusty conditions
- ☐ Other:

III. WHEN DRIVING:

- ☐ Through driveways
- ☐ Over rough roads
- ☐ Over speed bumps
- ☐ Only about ____ mph
- ☐ On acceleration
- ☐ Coming to a stop
- ☐ On turns: left, right or either (circle)
- ☐ With passengers or cargo
- ☐ Other: _____
- ☐ After driving _____ miles or _____ minutes

IV. WHAT TYPE OF NOISE

- ☐ Squeak (like tennis shoes on a clean floor)
- ☐ Creak (like walking on an old wooden floor)
- ☐ Rattle (like shaking a baby rattle)
- ☐ Knock (like a knock at the door)
- ☐ Tick (like a clock second hand)
- ☐ Thump (heavy muffled knock noise)
- ☐ Buzz (like a bumble bee)

TO BE COMPLETED BY DEALERSHIP PERSONNEL

Test Drive Notes:

_____

_____

_____

	YES	NO	Initials of person performing
Vehicle test driven with customer	☐	☐	_____
- Noise verified on test drive	☐	☐	_____
- Noise source located and repaired	☐	☐	_____
- Follow up test drive performed to confirm repair	☐	☐	_____

VIN: _____ Customer Name _____

W.O.# _____ Date: _____

This form must be attached to Work Order

LAIA0071E

FUNCTION DIAGNOSIS

TROUBLE DIAGNOSIS

Component Parts and Harness Connector Location

INFOID:0000000001704191

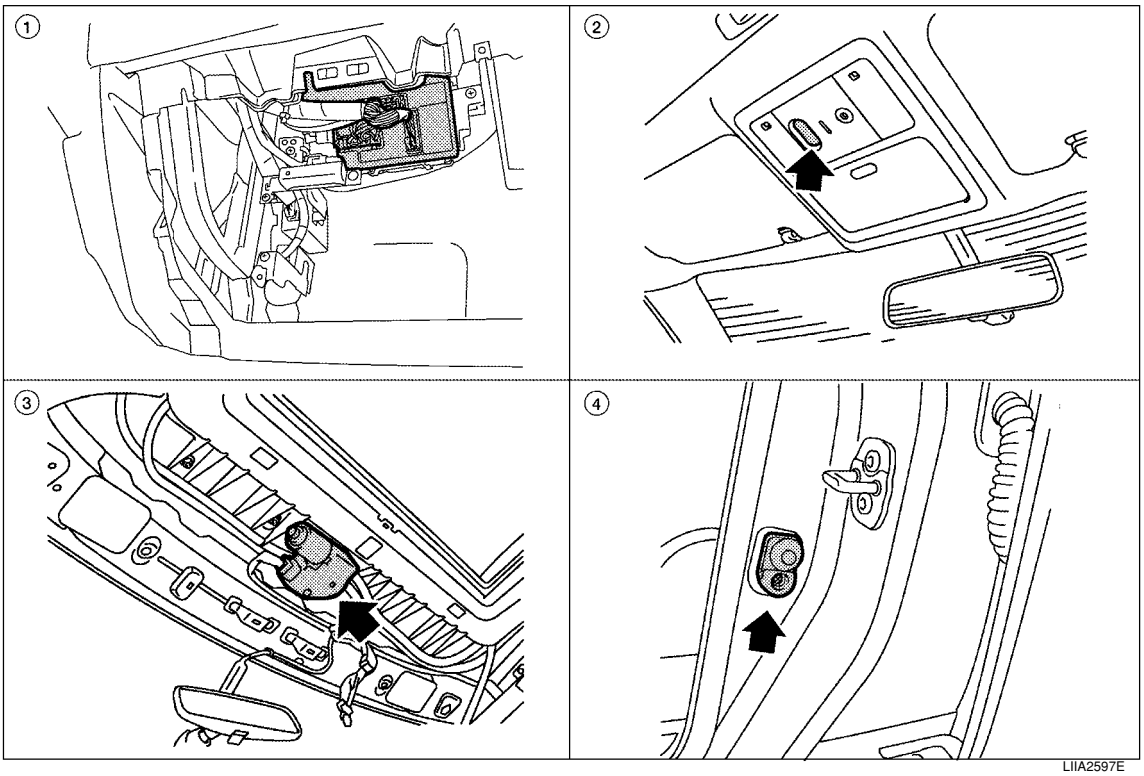

1. BCM M18, M19, M20 (view with glove box removed)
2. Sunroof switch R6
3. Sunroof motor assembly R4
4. Front door switch LH B8, RH B108

System Description

INFOID:0000000001704192

OUTLINE

Electric sunroof system consists of
- Sunroof switch
- Sunroof motor assembly
- BCM (body control module)

BCM supplies power to the sunroof motor. Sunroof operation depends on sunroof switch condition.

OPERATION

Power is supplied at all times
- through 40A fusible link (letter **g** , located in the fuse and fusible link box)
- to BCM terminal 70, and
- through BCM terminal 69
- to sunroof motor assembly terminal 7.

When the ignition switch is in the ON or START position, power is supplied
- through 10A fuse [No. 6, located in the fuse block (J/B)]
- to BCM terminal 38, and
- through BCM terminal 68
- to sunroof motor assembly terminal 9.

Ground is supplied
- to BCM terminal 67
- through grounds M57 and M61.

TILT UP/SLIDE CLOSE OPERATION

When up/close switch is pressed, ground is supplied

- to sunroof motor assembly terminal 1
- through sunroof switch terminal 3
- through sunroof switch terminal 2
- through grounds M57 and M61.

Then the sunroof will tilt up/slide closed.

TILT DOWN/SLIDE OPEN OPERATION

When down/open switch is pressed, ground is supplied

- to sunroof motor assembly terminal 5
- through sunroof switch terminal 1
- through sunroof switch terminal 2
- through grounds M57 and M61.

Then the sunroof will tilt down/slide open.

AUTO OPERATION

The power sunroof AUTO feature makes it possible to slide open and slide closed or tilt up and tilt down the sunroof without holding the sunroof switch in the UP/CLOSE or DOWN/OPEN position.

RETAINED POWER OPERATION

When the ignition switch is turned to OFF position from ON position, power is supplied for 45 seconds

- through BCM terminal 68
- to sunroof motor assembly terminal 9.

When power is supplied, the sunroof can be operated.
The retained power operation is canceled when the front door LH or RH is opened.
RAP signal period can be changed by CONSULT-III. Refer to RF-16, "Work Support" .

ANTI-PINCH FUNCTION

The CPU (central processing unit) of sunroof motor assembly monitors the sunroof motor operation and the sunroof position (fully-closed or other) by the signals from sunroof motor.
When sunroof motor detects an interruption during the following slide close and tilt down operation, sunroof switch controls the motor for open and the sunroof will operate until it reaches full up position (during tilt down operation) or 125 mm (4.92 in) or more in an open direction (during slide close operation).

- close operation and tilt down when ignition switch is in the ON position.
- close operation and tilt down during retained power operation.

INITIALIZATION FAILURE CONDITIONS

Initialization and teaching of system should be conducted if the following conditions exist:

- sunroof will only move in the UP/CLOSE direction, having a step by step motion
- sunroof does not have any auto operation.

INITIALIZATION PROCEDURE

If the sunroof does not close or open automatically, use the following procedure to return sunroof operation to normal.

1. Press the switch to the UP/CLOSE position to tilt the sunroof up fully. When the sunroof reaches the full tilt up position it will back up a few millimeters and stop.
2. Release the UP/CLOSE switch.
3. Within 5 seconds of releasing the UP/CLOSE switch, press and hold the UP/CLOSE switch again. The sunroof will move to the full open position and back to the closed position.

NOTE:
If the UP/CLOSE switch is released anytime during this teaching process, all learned profile data will be discarded and the procedure will have to be started over.

4. Release the UP/CLOSE switch. Do not disconnect power for at least two seconds. The sunroof is now initialized and taught.

Initializing procedure is complete. Confirm proper operation of the sunroof (slide open, slide closed, tilt up, tilt down).

RE-TEACHING CONDITIONS

Re-teaching of system should be conducted if any of the following conditions exist:

- the sunroof is manually operated using the sunroof wrench with the battery discharged or disconnected.
- the sunroof is manually operated using the sunroof wrench with the key switch in the OFF position and retained power timed out (after approximately 45 seconds or with a front door open).
- the sunroof motor assembly is replaced with a new one.
- the sunroof motor is removed from the sunroof assembly and operated before it is reinstalled.

- the sunroof motor is removed from the sunroof assembly and the glass panel position is changed.

RE-TEACHING PROCEDURE

1. Using the UP/CLOSE switch, move the sunroof toward the tilt position until it stops.
2. Release the UP/CLOSE switch.
3. Press the UP/CLOSE switch again and continuously hold. The sunroof will begin to move in about 10 seconds.
4. Continue to hold the UP/CLOSE switch while the sunroof moves in a jogging motion to the full tilt position. When the sunroof reaches the full tilt position, it will back up a few millimeters and stop.
5. Release the UP/CLOSE switch.
6. Within 5 seconds of releasing the UP/CLOSE switch, press and hold the UP/CLOSE switch again. The sunroof will move to the full open position and back to the closed position.

NOTE:
If the UP/CLOSE switch is released anytime during this teaching process, all learned profile data will be discarded and the procedure will have to be started over.

7. Release the UP/CLOSE switch. Do not disconnect power for at least two seconds. The sunroof is now re-taught.

CAN Communication System Description

INFOID:0000000001704193

Refer to LAN-6 .

Wiring Diagram - SROOF -

INFOID:0000000001704194

RF-SROOF-01

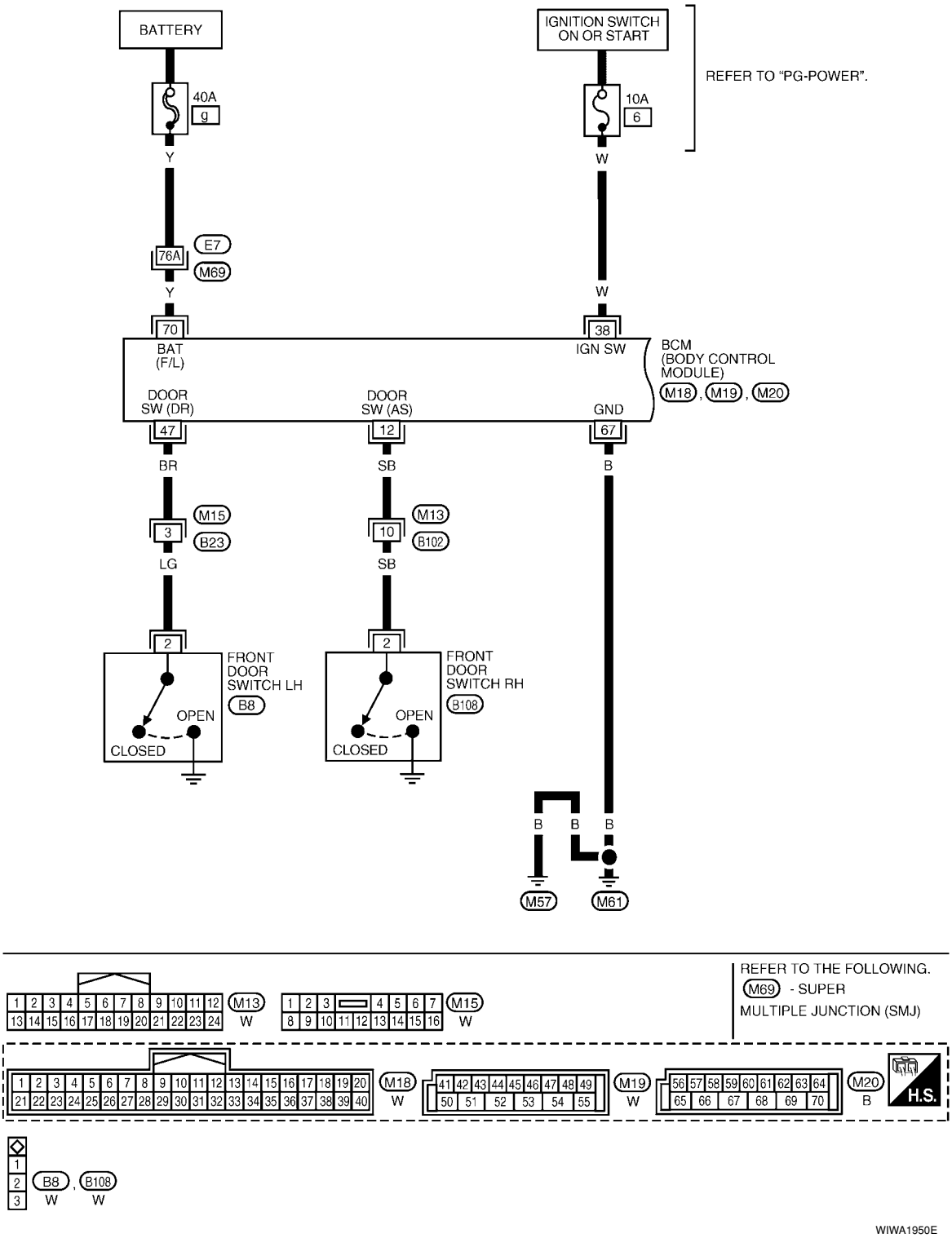

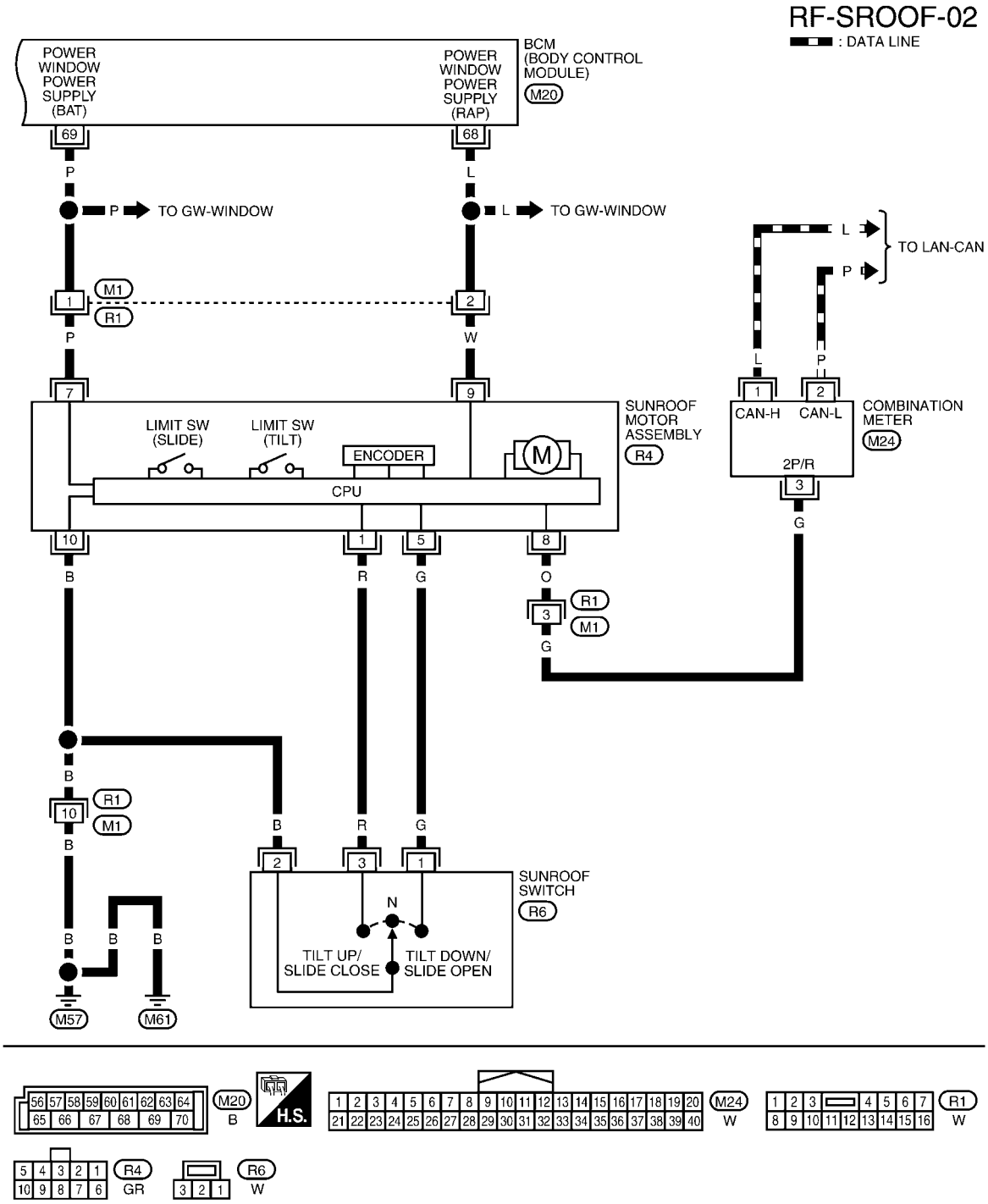

WIWA1951E

Terminal and Reference Value for BCM

INFOID:0000000001704195

Refer to BCS-11, "Terminal and Reference Value for BCM" .

Terminal and Reference Value for Sunroof Motor Assembly

INFOID:0000000001704196

Terminal	Wire color	Item	Condition	Voltage (Approx.)
1	R	Sunroof switch (UP/CLOSE) signal	Ignition switch ON and sunroof switch in UP/CLOSE position	0
			Ignition switch ON and sunroof switch in OFF position	Battery voltage
5	G	Sunroof switch (DOWN/OPEN) signal	Ignition switch ON and sunroof switch in DOWN/OPEN position	0
			Ignition switch ON and sunroof switch in OFF position	Battery voltage
7	P	BAT power supply	—	Battery voltage
8	O	Vehicle speed signal	Speedometer operated [when vehicle speed is approx. 40 km/h (25 MPH)]	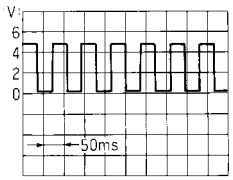 ELF1080D
9	W	RAP signal	Ignition switch ON	Battery voltage
			Within 45 seconds after ignition switch is turned OFF	Battery voltage
			When front door LH or RH is opened while retained power is operating	0
10	B	Ground	—	0

Work Flow

INFOID:0000000001704197

1. Check the symptom and customer's requests.
2. Understand the outline of system. Refer to RF-10, "System Description" .
3. According to the trouble diagnosis chart, repair or replace the cause of the malfunction. Refer to RF-16, "Trouble Diagnosis Chart by Symptom" .
4. Does sunroof system operate normally? If Yes, GO TO 5. If No, GO TO 3.
5. Inspection End.

CONSULT-III Function (BCM)

INFOID:0000000001704198

CONSULT-III can display each diagnostic item using the diagnostic test modes shown following.

BCM diagnostic test item	Diagnostic mode	Description
Inspection by part	WORK SUPPORT	Supports inspections and adjustments. Commands are transmitted to the BCM for setting the status suitable for required operation, input/output signals are received from the BCM and received data is displayed.
	DATA MONITOR	Displays BCM input/output data in real time.
	ACTIVE TEST	Operation of electrical loads can be checked by sending drive signal to them.
	SELF-DIAG RESULTS	Displays BCM self-diagnosis results.
	CAN DIAG SUPPORT MNTR	The result of transmit/receive diagnosis of CAN communication can be read.
	ECU PART NUMBER	BCM part number can be read.
	CONFIGURATION	Performs BCM configuration read/write functions.

Work Support

INFOID:0000000001704199

Work item	Description
RETAINED PWR SET	RAP signal's power supply period can be changed by mode setting. Selects RAP signal's power supply period between the following three steps. • MODE 1 (45 sec.) / MODE 2 (OFF) / MODE 3 (2 min.)

Active Test

INFOID:0000000001704200

Test item	Description
RETAINED PWR	This test is able to supply RAP signal (power) from BCM to power window system, power sunroof system. Those systems can be operated when turning on "RETAINED PWR" on CONSULT-III screen even if the ignition switch is turned OFF. **NOTE:** **During this test, CONSULT-III can be operated with ignition switch in "OFF" position. "RETAINED PWR" should be turned "ON" or "OFF" on CONSULT-III screen when ignition switch ON. Then turn ignition switch OFF for checking retained power operation. CONSULT-III might be stuck if "RETAINED PWR" is turned "ON" or "OFF" on CONSULT-III screen when ignition switch is OFF.**

Data Monitor

INFOID:0000000001704201

Monitored item	Description
IGN ON SW	Indicates [ON/OFF] condition of ignition switch.
DOOR SW-DR	Indicates [ON/OFF] condition of front door switch LH.
DOOR SW-AS	Indicates [ON/OFF] condition of front door switch RH.

Trouble Diagnosis Chart by Symptom

INFOID:0000000001704202

Symptom	Diagnostic procedure and repair order	Refer to page
Sunroof does not operate.	1. BCM power supply and ground circuit check	BCS-15
	2. Sunroof motor assembly power supply and ground circuit check	RF-18
	3. Sunroof switch system check	RF-16
	4. Replace sunroof motor assembly	RF-21
Motor does not stop at the sunroof fully-open or fully-closed position.	1. Initialization procedure check	RF-10
	2. Replace sunroof motor assembly	RF-21
Retained power operation does not operate properly.	1. Check the retained power operation mode setting	RF-10
	2. BCM power supply and ground circuit check	BCS-15
	3. Door switch check	RF-19
	4. Replace sunroof motor assembly	RF-21
Sunroof does not do the interruption detection.	1. Replace sunroof motor assembly	RF-21

BCM Power Supply and Ground Circuit Inspection

INFOID:0000000001704203

Refer to BCS-15, "BCM Power Supply and Ground Circuit Inspection" .

Sunroof Switch System Inspection

INFOID:0000000001704204

1.SUNROOF SWITCH INPUT SIGNAL CHECK

1. Turn ignition switch ON.
2. Check voltage between sunroof motor assembly connector and ground.

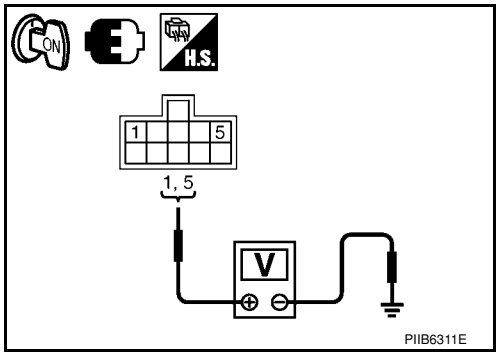

Connector	Terminal (+)	Terminal (-)	Condition	Voltage (Approx.)
R4	1	Ground	Sunroof switch is operated to UP/CLOSE	0
			Other than above	Battery voltage
	5		Sunroof switch is operated to DOWN/OPEN	0
			Other than above	Battery voltage

OK or NG

OK >> Sunroof switch input signal circuits are OK.
NG >> GO TO 2.

2. SUNROOF SWITCH CIRCUIT CHECK

1. Turn ignition switch OFF.
2. Disconnect sunroof motor assembly and sunroof switch.
3. Check continuity between sunroof motor assembly connector R4 (A) terminals 1, 5 and sunroof switch connector R6 (B) terminals 1, 3.

1 - 3 : Continuity should exist.
5 - 1 : Continuity should exist.

4. Check continuity between sunroof motor assembly connector R4 (A) terminals 1, 5 and ground.

1 - Ground : Continuity should not exist.
5 - Ground : Continuity should not exist.

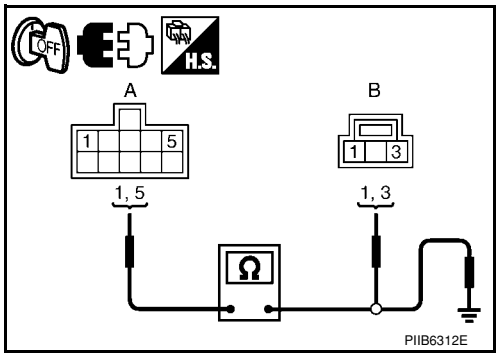

OK or NG

OK >> GO TO 3.
NG >> Repair or replace harness.

3. SUNROOF SWITCH GROUND CIRCUIT CHECK

Check continuity between sunroof switch connector R6 terminal 2 and ground.

2 - Ground : Continuity should exist.

OK or NG

OK >> GO TO 4.
NG >> Repair or replace harness.

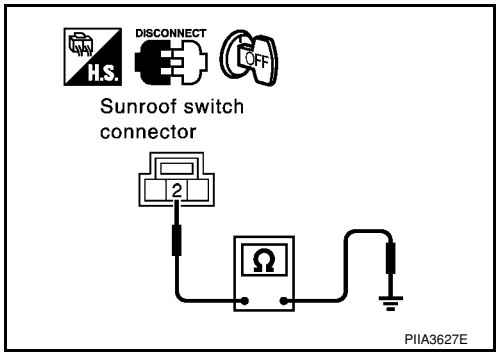

4. SUNROOF SWITCH CHECK

Check continuity between sunroof switch terminals 1, 3 and 2.

Terminals		Condition	Continuity
1	2	Sunroof switch is operated to DOWN/OPEN	Yes
		Other than above	No
3		Sunroof switch is operated to UP/CLOSE	Yes
		Other than above	No

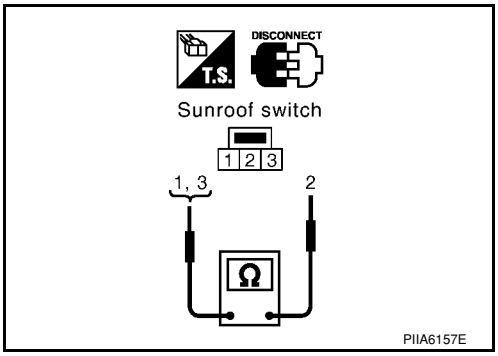

OK or NG

OK >> Replace sunroof motor assembly. Refer to RF-21, "Removal and Installation" .
NG >> Replace sunroof switch.

Sunroof Motor Assembly Power Supply and Ground Circuit Inspection

INFOID:0000000001704205

1. CHECK POWER SUPPLY CIRCUIT

1. Turn ignition switch ON.
2. Check voltage between sunroof motor assembly connector R4 terminals 7, 9 and ground.

7 - Ground : Battery voltage
9 - Ground : Battery voltage

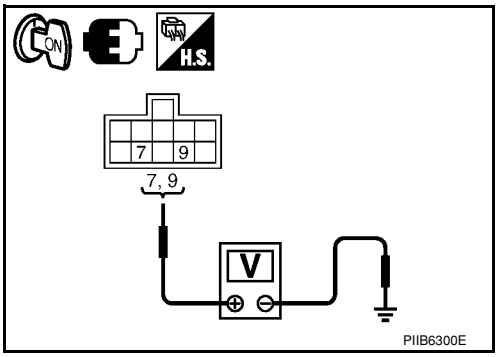

OK or NG

OK >> GO TO 2.
NG >> GO TO 3.

2. CHECK GROUND CIRCUIT

1. Turn ignition switch OFF.
2. Disconnect sunroof motor assembly.
3. Check continuity between sunroof motor assembly connector R4 terminal 10 and ground.

10 - Ground : Continuity should exist.

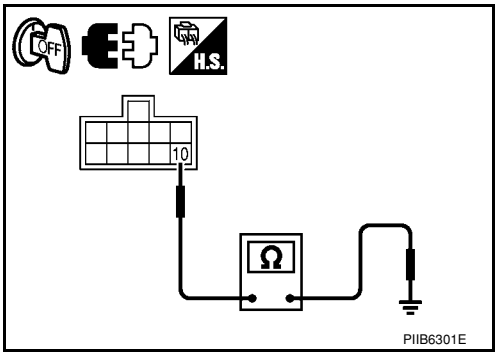

OK or NG

OK >> Sunroof motor assembly power supply and ground circuits are OK. Further inspection is necessary. Refer to RF-16, "Trouble Diagnosis Chart by Symptom" .
NG >> Repair or replace harness.

3. CHECK BCM OUTPUT SIGNAL

Check voltage between BCM connector M20 terminals 68, 69 and ground.

68 - Ground : Battery voltage
69 - Ground : Battery voltage

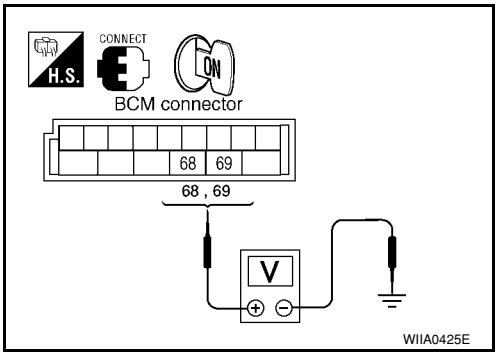

OK or NG

OK >> GO TO 4.
NG >> Replace BCM. Refer to BCS-18, "Removal and Installation of BCM" .

4. CHECK SUNROOF MOTOR CIRCUIT

1. Turn ignition switch OFF.
2. Disconnect BCM and sunroof motor assembly connectors.
3. Check continuity between BCM connector M20 (A) terminals 68, 69 and sunroof motor assembly connector R4 (B) terminals 7, 9.

68 - 9 : Continuity should exist.
69 - 7 : Continuity should exist.

4. Check continuity between BCM connector M20 (A) terminals 68, 69 and ground.

68 - Ground : Continuity should not exist.
69 - Ground : Continuity should not exist.

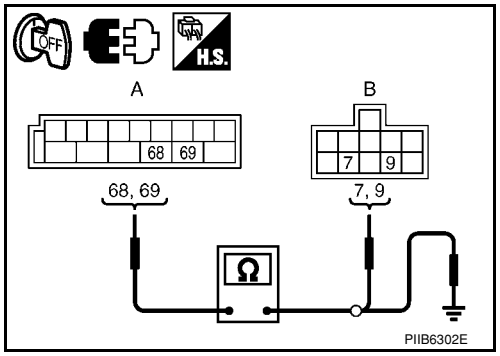

OK or NG

OK >> Sunroof motor assembly power supply circuits are OK. Further inspection is necessary. Refer to RF-16, "Trouble Diagnosis Chart by Symptom" .

NG >> Repair or replace harness.

Door Switch Check

INFOID:0000000001704206

1.CHECK DOOR SWITCH INPUT SIGNAL

With CONSULT-III

Check ("DOOR SW-DR" and "DOOR SW-AS") in "DATA MONITOR" mode with CONSULT-III.

Monitor item	Condition	
DOOR SW-DR	DOOR OPEN	: ON
	DOOR CLOSED	: OFF
DOOR SW-AS	DOOR OPEN	: ON
	DOOR CLOSED	: OFF

Without CONSULT-III

Check voltage between BCM connector M18, M19 terminals 12, 47 and ground.

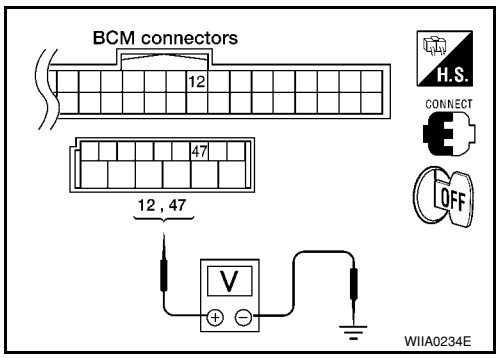

Item	Terminal (+)	Terminal (-)	Condition	Voltage (Approx.)
Front door switch RH	12	Ground	DOOR OPEN (Switch closed)	0
			DOOR CLOSED (Switch open)	Battery voltage
Front door switch LH	47		DOOR OPEN (Switch closed)	0
			DOOR CLOSED (Switch open)	Battery voltage

OK or NG

OK >> Door switch circuit is OK.

NG >> GO TO 2.

2.CHECK DOOR SWITCH CIRCUIT

1. Turn ignition switch OFF.
2. Disconnect door switch and BCM.
3. Check continuity between BCM connector M18, M19 terminals 12, 47 and door switch connectors B8, B108 terminal 2.

Front door LH

47 - 2 : Continuity should exist.

Front door RH

12 - 2 : Continuity should exist.

4. Check continuity between BCM connector M18, M19 terminals 12, 47 and ground.

12 - Ground : Continuity should not exist.

47 - Ground : Continuity should not exist.

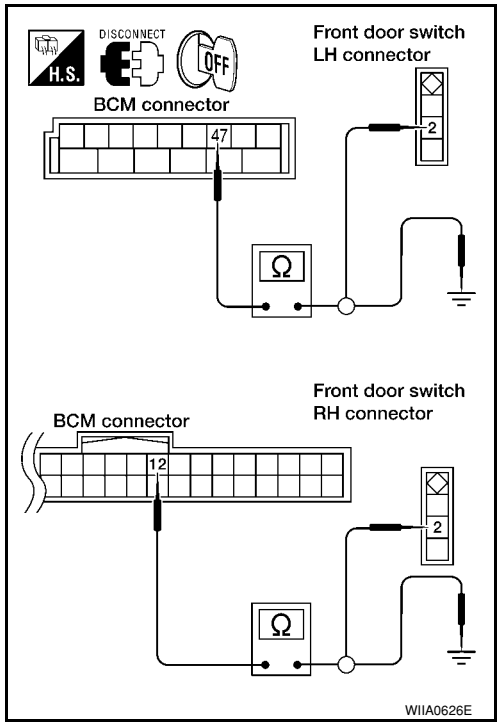

OK or NG

OK >> GO TO 3.
NG >> Repair or replace harness.

3. CHECK DOOR SWITCH

Check continuity between door switches terminal 2 and ground part of door switch.

Terminal		Door switch	Continuity
2	Ground part of door switch	Pushed	No
		Released	Yes

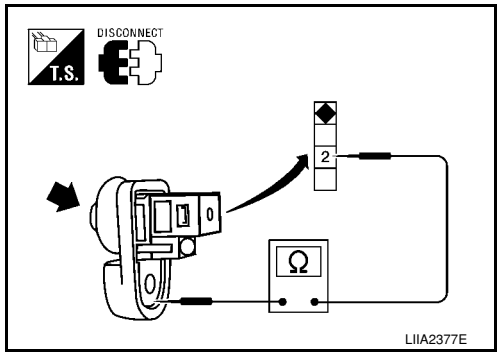

OK or NG

OK >> GO TO 4.
NG >> Replace malfunctioning door switch.

4. CHECK BCM OUTPUT SIGNAL

1. Connect BCM.
2. Check voltage between BCM connector M18, M19 terminals 12, 47 and ground.

12 - Ground : Battery voltage

47 - Ground : Battery voltage

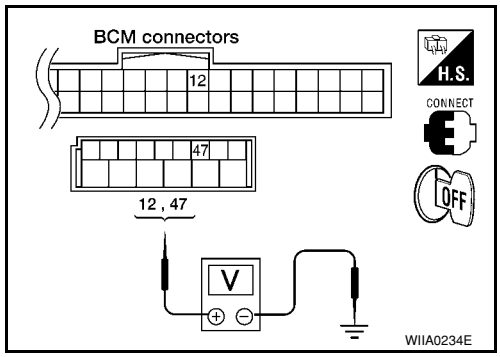

OK or NG

OK >> Further inspection is necessary. Refer to RF-16, "Trouble Diagnosis Chart by Symptom" .
NG >> Replace BCM. Refer to BCS-18, "Removal and Installation of BCM" .

ON-VEHICLE REPAIR

SUNROOF

Removal and Installation

INFOID:0000000001704207

CAUTION:
- **After installation or any adjustment, check clearances for sunroof operation and glass lid alignment.**
- **Handle glass lid with care to prevent damage.**
- **Fully close the glass lid before removal, then do not operate sunroof motor assembly after removal.**
- **When removing sunroof unit assembly, use shop cloths to protect the seats and trim from damage.**
- **Always work with a helper.**

NOTE:
For easy installation, mark each point before removal.

SEC. 736

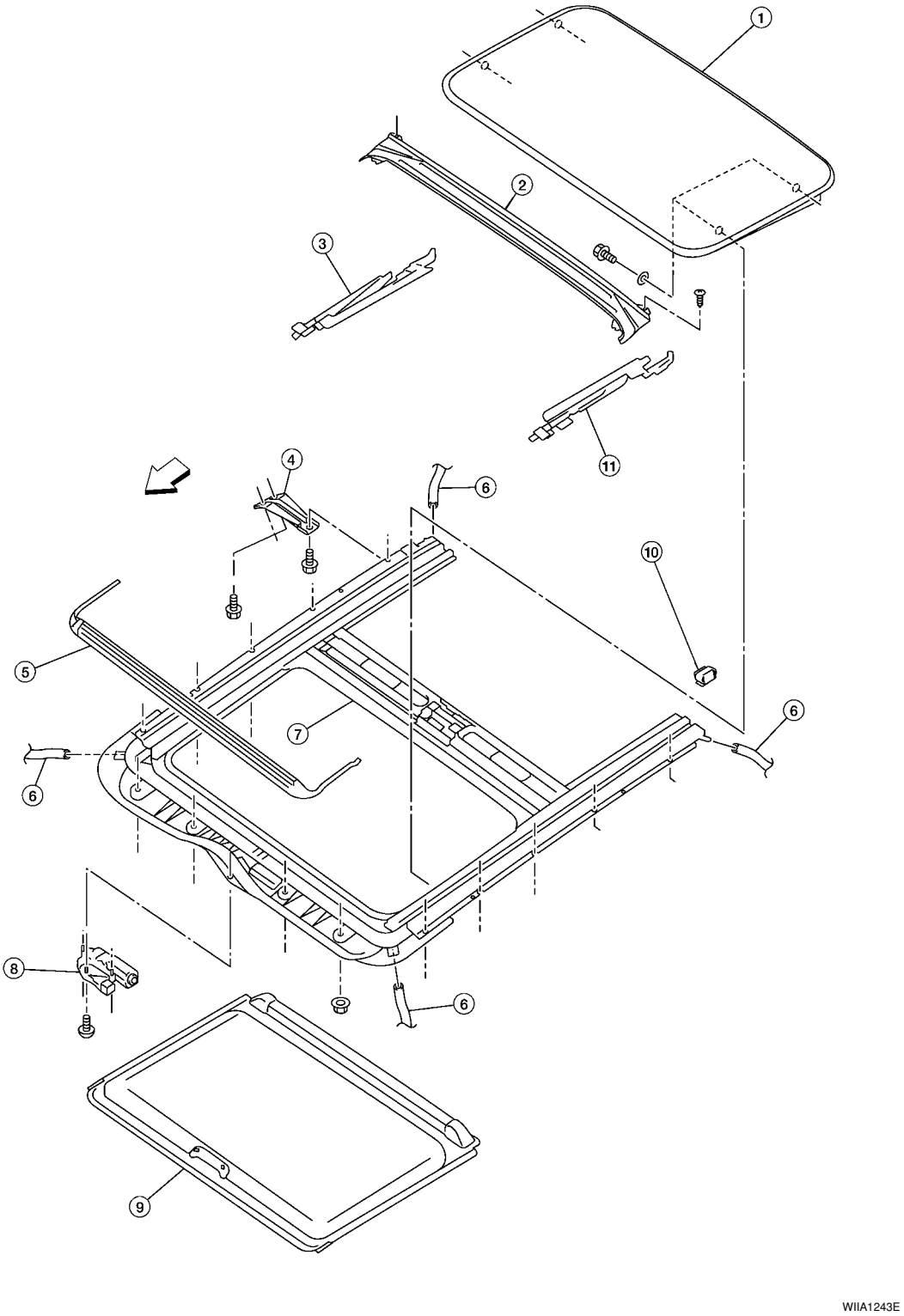

1.	Glass lid	2.	Rear drain assembly	3.	Link assembly (RH)
4.	Sunroof bracket	5.	Wind deflector	6.	Drain hose
7.	Sunroof unit assembly	8.	Sunroof motor assembly	9.	Sunshade
10.	Sunshade stopper	11.	Link assembly (LH)	⇐	Vehicle front

SUNROOF UNIT ASSEMBLY

Removal

1. Tilt glass lid up, then remove. Refer to RF-21, "Removal and Installation".
2. Position sunroof unit assembly to the fully closed position.
3. Remove the headlining. Refer to EI-45, "Component".
4. Disconnect drain hoses.
5. Remove the screws, then disconnect the sunroof motor assembly.
   NOTE:
   - Before removing sunroof motor assembly, make sure that sunroof is fully closed.
   - After removing sunroof motor assembly, do not attempt to rotate sunroof motor as a single unit.

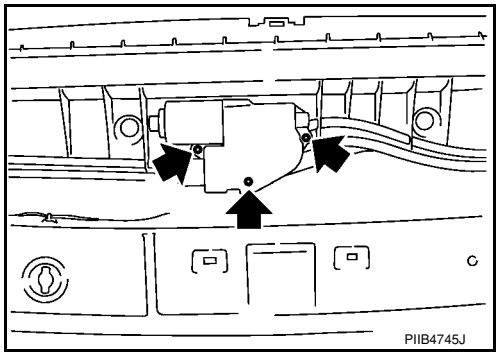

6. Remove the side and front sunroof unit assembly nuts.

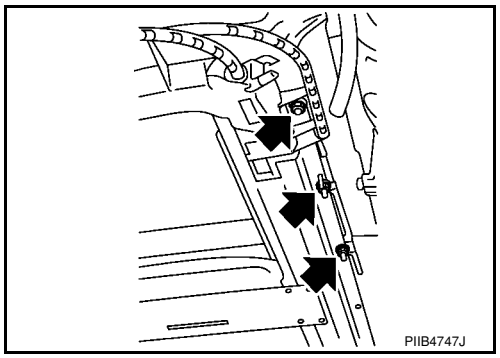

7. Remove sunroof bracket bolts, then remove sunroof unit assembly from roof panel.
   - Remove sunroof unit assembly through the passenger compartment.

   CAUTION:
   Use care during assembly removal and installation to avoid damage to seats and trim.

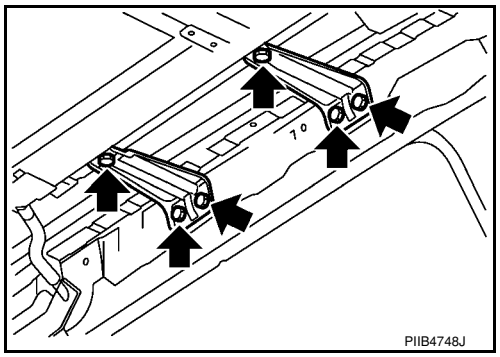

Installation

1. Install sunroof brackets and bolts to the roof panel side only, but do not tighten.
2. Bring sunroof unit assembly into passenger compartment and position it so the rear rests on the sunroof brackets.
3. Install sunroof bracket bolts to the sunroof unit assembly side, but do not tighten.

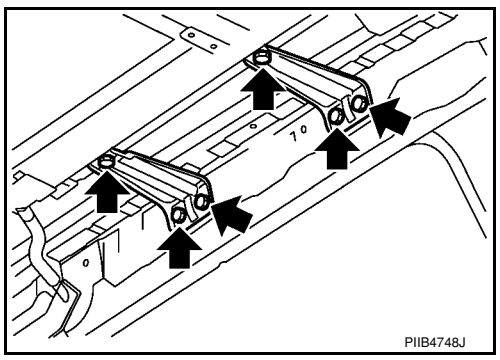

4. Install the front and side sunroof unit assembly nuts, but do not tighten.

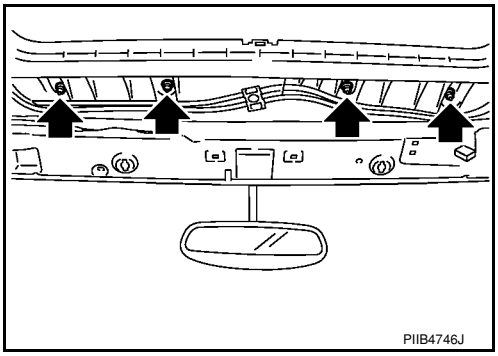

5. Tighten the sunroof unit assembly.

a. First, tighten the sunroof bracket bolts at the vehicle side, then tighten the bolt on the rail side.

b. Next, tighten the front and side sunroof unit assembly nuts diagonally.

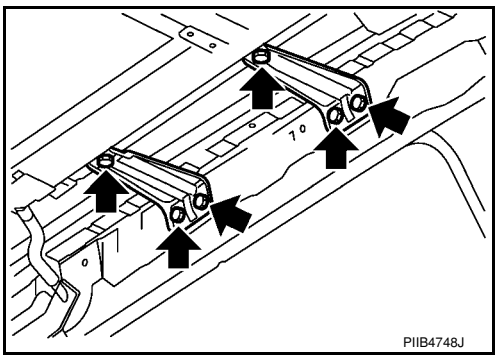

7. Connect the sunroof motor assembly connector and install the screws.

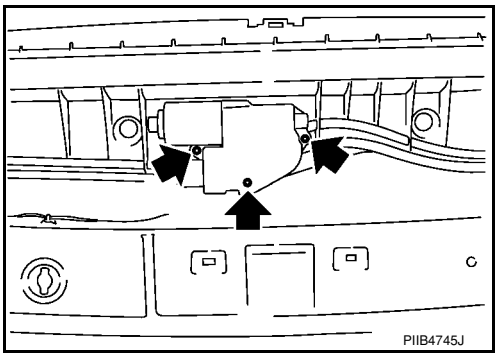

8. Install the glass lid. Refer to "GLASS LID" .
9. Connect drain hoses.
10. Install headlining. Refer to EI-45, "Component".
11. Perform fitting adjustment and test for leaks, refer to RF-26, "Fitting Adjustment" .

GLASS LID

Removal

1. Open the sunshade fully and close the glass lid.
2. Remove glass lid bolts, then remove glass lid.

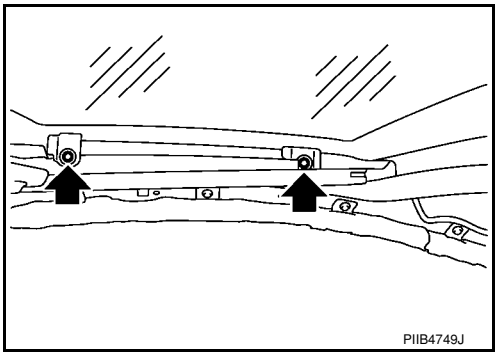

Installation

1. Position the glass lid on sunroof unit assembly.
2. Partially install glass lid bolts. Tighten left front bolt first, then right rear to prevent uneven torque while tightening remaining bolts.
3. After installation, check sunroof operation and glass lid assembly alignment. Refer to RF-26, "Fitting Adjustment" .

SUNSHADE

Removal

1. Remove the headlining. Refer to EI-45, "Component".
2. Remove sunshade stopper RH/LH.
3. Pull sunshade out rear of sunroof frame to remove it from sunroof unit assembly frame.

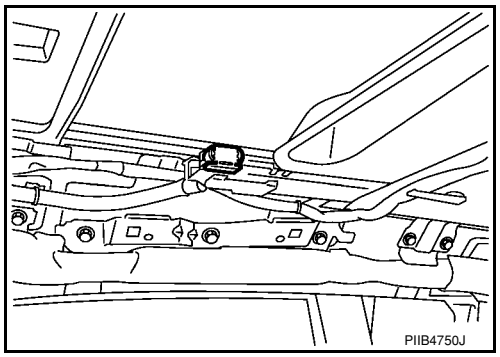

Installation

Installation is in the reverse order of removal.

WIND DEFLECTOR

Removal

1. Open the glass lid.
2. Remove spring retainer screws RH/LH, then slide retainer forward in vehicle out of sunroof unit assembly channel.
3. Lift wind deflector and rotate arms upward to release from sunroof unit assembly.

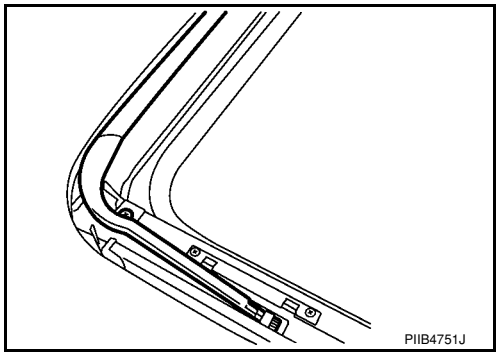

Installation

Installation is in the reverse order of removal.

SUNROOF MOTOR ASSEMBLY

Removal

1. Close the glass lid.
2. Remove headlining. Refer to EI-45, "Component".
3. Remove sunroof motor assembly screws.
4. Disconnect harness connector from sunroof motor assembly, then remove sunroof motor assembly.

   CAUTION:
   - **When removing the sunroof motor assembly, be sure that the sunroof lid is in the fully closed position.**
   - **Do not operate the removed sunroof motor assembly as a single unit.**

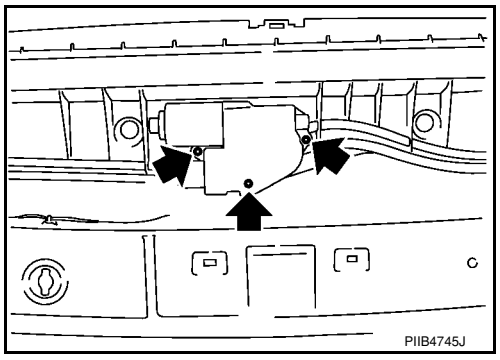

Installation

CAUTION:
- **Before installing the sunroof motor assembly, be sure the link assembly is in the symmetrical and fully closed position.**
- **Align the link notch with the hole of the guide track (fully closed: RH and LH).**

1. Place the sunroof motor assembly flat onto the sunroof unit assembly surface.
2. Laterally move the assembly little by little so that the gear is completely engaged into the wire and there is no gap between the sunroof unit assembly and sunroof motor assembly.
3. Install the sunroof motor assembly screws, then connect the harness connector.
4. After installing, perform the initialization procedure. Refer to RF-10, "System Description" .

LINK ASSEMBLY

Removal

1. Remove sunroof unit assembly. Refer to RF-21, "Removal and Installation".
2. Remove screws, then remove rear drain assembly.
3. Remove sunroof motor assembly. Refer to RF-21, "Removal and Installation".
4. Remove link assembly from the rear end of the sunroof frame.

Installation

Installation is in the reverse order of removal.

Fitting Adjustment

INFOID:0000000001704208

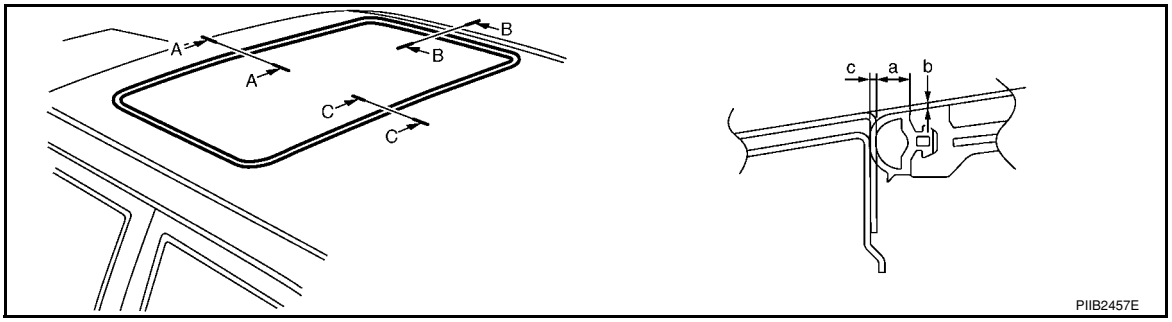

	a	b	c
A–A	**5.8 mm (0.228 in)**	**0.75 ± 1.5 mm (0.03 ± 0.059 in)**	**1.4 ± 0.8 mm (0.055 ± 0.031 in)**
B–B	**5.8mm (0.228 in)**	**0.75 ± 1.5 mm (0.03 ± 0.059 in)**	**1.4 ± 0.8 mm (0.055 ± 0.031 in)**
C–C	**5.8mm (0.228 in)**	**0.75 ± 1.5 mm (0.03 ± 0.059 in)**	**1.4 ± 0.8 mm (0.055 ± 0.031 in)**

GAP ADJUSTMENT

1. Tilt up glass lid.
2. Loosen glass lid bolts, then tilt down glass lid.
3. Adjust glass lid from outside of vehicle so it resembles “A–A” “B–B” “C–C” as shown in the figure.
   - For gap adjustment "A-A" "C-C", carefully slide glass lid forward and rearward in vehicle.
   - For gap adjustment "B-B", loosen sunroof unit assembly and shift side to side.

   NOTE:
   To prevent glass lid from moving after adjustment, lightly tighten the bolts.
4. Tighten left front bolt, then right rear bolt to prevent uneven torque. Tighten remaining bolts, being careful to prevent glass lid from moving.

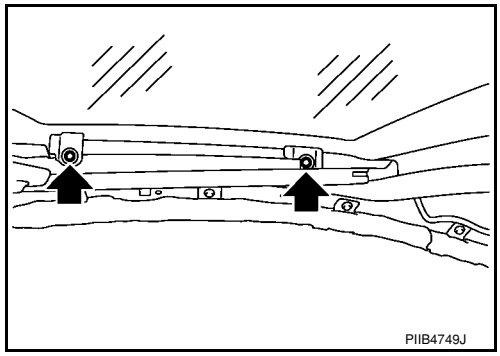

5. Tilt glass lid up and down several times to check that it moves smoothly, and retains the adjustment.

HEIGHT ADJUSTMENT

1. Tilt up glass lid.
2. Loosen glass lid bolts, then tilt down glass lid.
3. Adjust glass lid from outside of vehicle so it resembles "A-A" "B-B" "C-C" as shown in the figure.
   - For height adjustment, manually raise/lower glass lid assembly until height difference is within specifications.

   NOTE:
   - If necessary, shims may be added between sunroof unit assembly and roof panel to increase glass lid height adjustment range.
   - To prevent glass lid from moving after adjustment, lightly tighten the bolts.
4. Tighten left front bolt, then right rear bolt to prevent uneven torque. Tighten remaining bolts, being careful to prevent glass lid from moving.
5. Tilt glass lid up and down several times to check that it moves smoothly, and retains the adjustment.

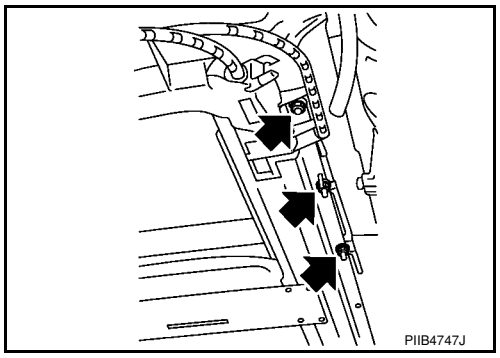

Inspection

INFOID:0000000001704209

WIND DEFLECTOR

Check that the wind deflector (1) moves freely within the sunroof unit assembly while manually pressing down and releasing. If a malfunction is detected, remove and visually check the deflector for damage, deteriorated components, or foreign objects within mechanism. Check to determine if a sufficient amount of grease has been applied to the pivot areas for non-binding operation, if not add grease as required. If it is damaged, replace it with a new one. If no damage is found, reinstall it properly.

⇐: Vehicle front

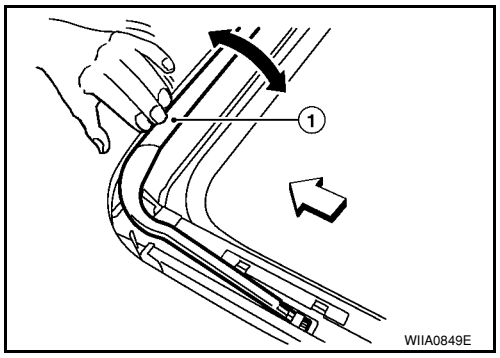

LINK ASSEMBLY AND WIRE

NOTE:

Before replacing a suspect part, make sure it is the source of noise being experienced.

1. Check link to determine if coated film has peeled off to such an extent that substrate is visible. Check also to determine if link is the source of noise. If it is, replace it.
2. Visually check to determine if a sufficient amount of grease has been applied to wire or rail groove of the sunroof unit assembly. If not, add grease as required.
3. Check wire for any damage or deterioration. If any damage is found, replace sunroof unit assembly.

WEATHERSTRIP

1. Visually check weatherstrip for damage, deterioration, or deformation.
   - Open glass lid assembly enough to inspect front edge of weatherstrip.
   - Tilt up glass lid assembly fully to inspect sides and rear edge of weatherstrip.

   If any area of the weatherstrip is found to be damaged, replace the glass lid assembly. Refer to RF-21, "Removal and Installation" .
2. Check for leakage around glass lid.
   - Close glass lid fully.
   - Pour water around surface to determine area of concern.
   - For gaps or misalignment, adjust glass lid to specifications. Refer to RF-26, "Fitting Adjustment" .
   - For damaged sealing surfaces, either replace glass lid RF-21, "Removal and Installation" , or repair the panel BL-265, "Precaution in Repairing High Strength Steel" .

DRAIN HOSES

Hatchback Models

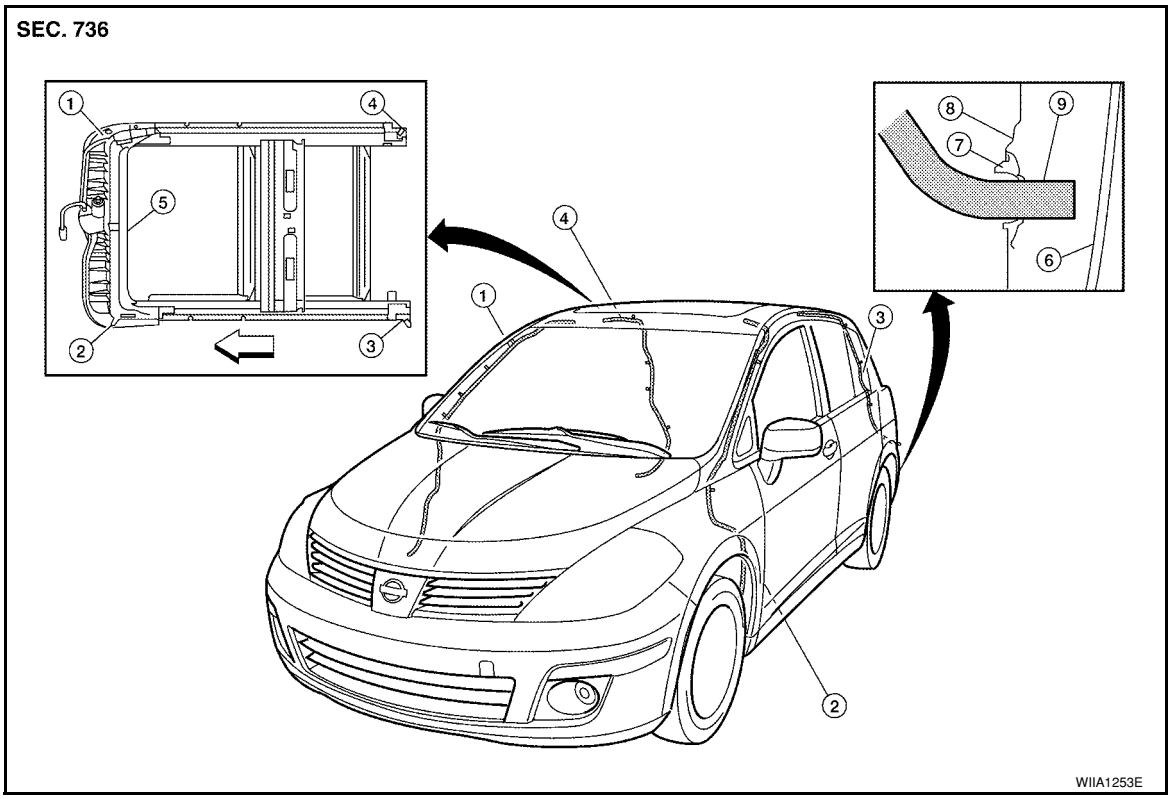

1. Drain hose front RH
2. Drain hose front LH
3. Drain hose rear LH
4. Drain hose rear RH
5. Sunroof unit assembly
6. Fascia
7. Seal
8. Fender
9. Drain hose

⇐ Vehicle front

Sedan Models

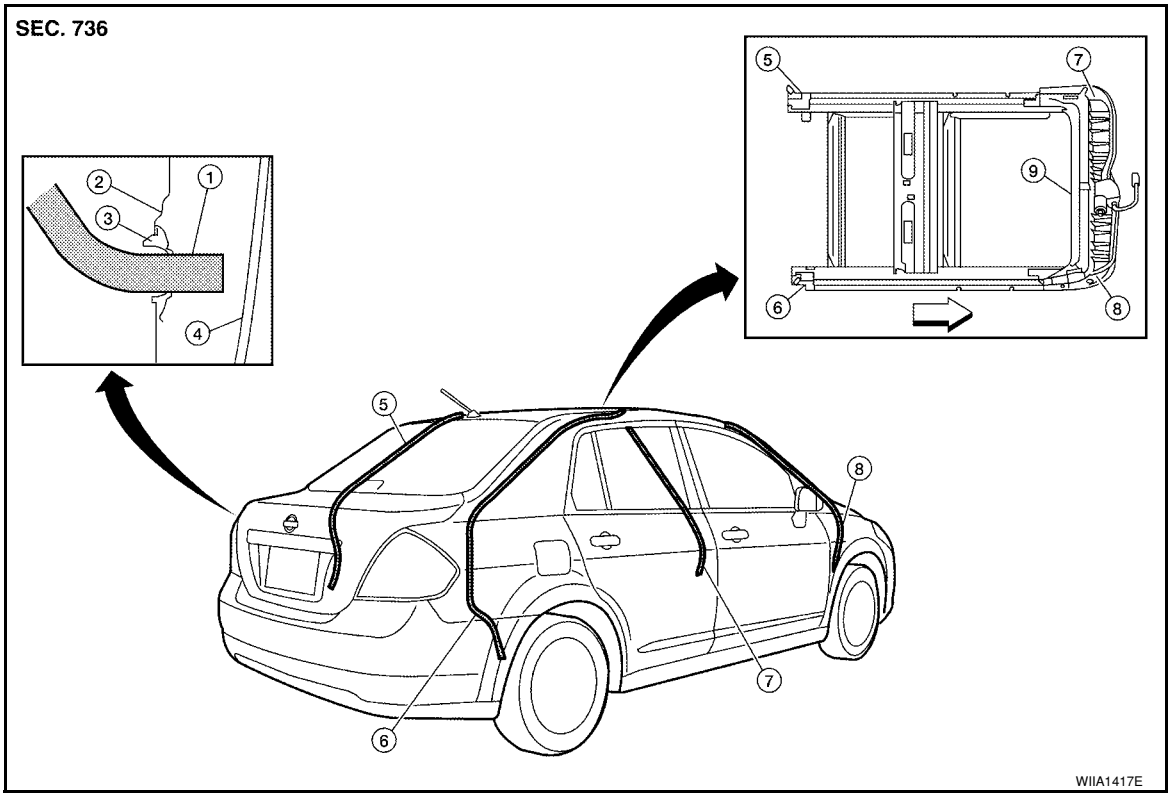

1. Drain hose	2. Fender	3. Seal
4. Fascia	5. Drain hose rear LH	6. Drain hose rear RH
7. Drain hose front LH	8. Drain hose front RH	9. Sunroof unit assembly
⇐ Vehicle front		

1. Remove headlining. Refer to EI-45, "Component".
2. Visually check drain hoses for:
   - Proper connection at sunroof unit assembly.
   - Damage, pinch, cracks, deterioration.
   - Proper fastening and routing on body panels.
3. Pour water through drain hoses to determine watertight performance.

If a damaged or leaking portion in any drain hose is found, replace entire drain hose as an assembly.

SECTION RSU
REAR SUSPENSION

CONTENTS

SERVICE INFORMATION 2

PRECAUTIONS 2
Precaution for Supplemental Restraint System (SRS) "AIR BAG" and "SEAT BELT PRE-TENSIONER" 2
Precaution for Rear Suspension 2

PREPARATION 3
Commercial Service Tool 3

NOISE, VIBRATION AND HARSHNESS (NVH) TROUBLESHOOTING 4
NVH Troubleshooting Chart 4

REAR SUSPENSION ASSEMBLY 5
On-Vehicle Inspection and Service 5
Wheel AlignmentInspection 5
Component 7

SHOCK ABSORBER 8
Removal and Installation 8

COIL SPRING 10
Removal and Installation 10

REAR SUSPENSION BEAM 11
Removal and Installation 11

SERVICE DATA AND SPECIFICATIONS (SDS) 12
Wheel Alignment (Unladen*) 12
Wheelarch Height (Unladen*) 12

SERVICE INFORMATION

PRECAUTIONS

Precaution for Supplemental Restraint System (SRS) "AIR BAG" and "SEAT BELT PRE-TENSIONER"

INFOID:0000000001703732

The Supplemental Restraint System such as “AIR BAG” and “SEAT BELT PRE-TENSIONER”, used along with a front seat belt, helps to reduce the risk or severity of injury to the driver and front passenger for certain types of collision. This system includes seat belt switch inputs and dual stage front air bag modules. The SRS system uses the seat belt switches to determine the front air bag deployment, and may only deploy one front air bag, depending on the severity of a collision and whether the front occupants are belted or unbelted.
Information necessary to service the system safely is included in the SRS and SB section of this Service Manual.

WARNING:

- **To avoid rendering the SRS inoperative, which could increase the risk of personal injury or death in the event of a collision which would result in air bag inflation, all maintenance must be performed by an authorized NISSAN/INFINITI dealer.**
- **Improper maintenance, including incorrect removal and installation of the SRS, can lead to personal injury caused by unintentional activation of the system. For removal of Spiral Cable and Air Bag Module, see the SRS section.**
- **Do not use electrical test equipment on any circuit related to the SRS unless instructed to in this Service Manual. SRS wiring harnesses can be identified by yellow and/or orange harnesses or harness connectors.**

Precaution for Rear Suspension

INFOID:0000000001703733

- When installing the rubber bushings, the final tightening must be done under unladen condition and with the tires on level ground. Oil will shorten the life of the rubber bushings, so wipe off any spilled oil immediately.
- Unladen condition means the fuel tank, engine coolant and lubricants are at the full specification. The spare tire, jack, hand tools, and mats are in their designated positions.
- After installing suspension components, check the wheel alignment.
- Caulking nuts are not reusable. Always use new caulking nuts for installation. New caulking nuts are pre-oiled, do not apply any additional lubrication.

PREPARATION

Commercial Service Tool

INFOID:0000000001703734

Tool name	Description
Power tool 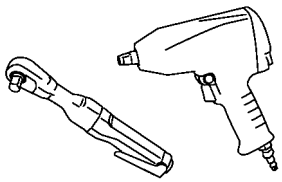 PBIC0190E	Removing wheel nuts

NOISE, VIBRATION AND HARSHNESS (NVH) TROUBLESHOOTING

NVH Troubleshooting Chart

INFOID:0000000001703735

Use chart below to help you find the cause of the symptom. If necessary, repair or replace these parts.

Reference page		RSU-7	RSU-8	RSU-8	RSU-8	RSU-10	RSU-7	RSU-5	RSU-4	WT-4	WT-4	BR-4	PS-5
Possible cause and SUSPECTED PARTS		Improper installation, looseness	Shock absorber deformation, damage or deflection	Bushing or mounting deterioration	Parts interference	Spring fatigue	Suspension looseness	Incorrect wheel alignment	REAR AXLE	TIRES	ROAD WHEEL	BRAKES	STEERING
Symptom	Noise	×	×	×	×	×	×		×	×	×	×	×
	Shake	×	×	×	×		×		×	×	×	×	×
	Vibration	×	×	×	×	×			×	×			×
	Shimmy	×	×	×	×			×	×	×	×	×	×
	Judder	×	×	×					×	×	×	×	×
	Poor quality ride or handling	×	×	×	×	×		×	×	×	×		

×: Applicable

REAR SUSPENSION ASSEMBLY

On-Vehicle Inspection and Service

INFOID:0000000001703736

Make sure the mounting conditions (looseness, backlash) of each component and component conditions (wear, damage) are within specifications.

SHOCK ABSORBER INSPECTION

Check shock absorber for oil leakage, damage and replace it if necessary.

Wheel AlignmentInspection

INFOID:0000000001703737

DESCRIPTION

Measure wheel alignment under unladen conditions.

NOTE:

“Unladen conditions” means that fuel, engine coolant, and lubricant are full. Spare tire, jack, hand tools and mats are in designated positions.

PRELIMINARY

Check the following:

1. Tires for improper air pressure and wear.
2. Road wheels for runout. Refer to WT-5 .
3. Wheel bearing axial end play. Refer to RAX-4, "On-Vehicle Inspection and Service" .
4. Shock absorber operation.
5. Each mounting part of suspension for looseness and deformation.
6. Rear suspension beam for cracks, deformation, and other damage.
7. Vehicle height (posture).

GENERAL INFORMATION AND RECOMMENDATIONS

1. A Four-Wheel Thrust Alignment should be performed.
   - This type of alignment is recommended for any NISSAN vehicle.
   - The four-wheel “thrust” process helps ensure that the vehicle is properly aligned and the steering wheel is centered.
   - The alignment machine itself should be capable of accepting any NISSAN vehicle.
   - The alignment machine should be checked to ensure that it is level.
2. Make sure the alignment machine is properly calibrated.
   - Your alignment machine should be regularly calibrated in order to give correct information.
   - Check with the manufacturer of your specific alignment machine for their recommended Service/Calibration Schedule.

THE ALIGNMENT PROCESS

IMPORTANT: Use only the alignment specifications listed in this Service Manual. Refer to RSU-12, "Wheel Alignment (Unladen*)" .

1. When displaying the alignment settings, many alignment machines use “indicators”: (Green/red, plus or minus, Go/No Go). **Do NOT use these indicators.**
   - The alignment specifications programmed into your alignment machine that operate these indicators may not be correct.
   - This may result in an ERROR.
2. Some newer alignment machines are equipped with an optional “Rolling Compensation” method to “compensate” the sensors (alignment targets or head units). **Do NOT use this “Rolling Compensation” method.**
   - Use the “Jacking Compensation” method. After installing the alignment targets or head units, raise the vehicle and rotate the wheels 1/2 turn both ways.
   - See Instructions in the alignment machine you are using for more information.

CAMBER INSPECTION

- Measure camber of both right and left wheels with a suitable alignment gauge.

Camber : **Refer to RSU-12, "Wheel Alignment (Unladen*)"** .

- If it is out of the specification value, inspect and replace any damaged or worn rear suspension parts.

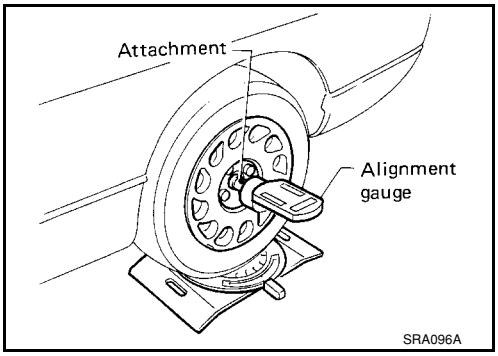

TOE-IN INSPECTION

Measure toe-in using following procedure. If it is out of the specification, inspect and replace any damaged or worn rear suspension parts.

WARNING:

- **Always perform the following procedure on a flat surface.**
- **Make sure that no person is in front of vehicle before pushing it.**

1. Bounce the rear of vehicle up and down to stabilize the vehicle height (posture).
2. Push vehicle straight ahead about 5 m (16 ft).
3. Put a mark on base line of the tread (rear side) of both tires at the same height of hub center. These are measuring points.

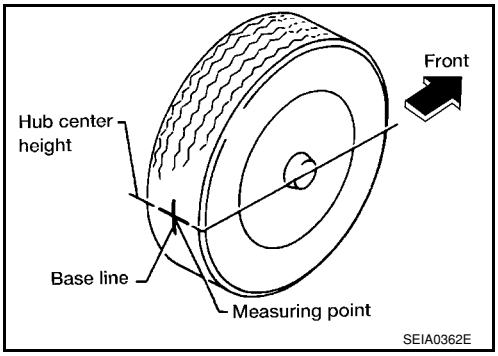

4. Measure distance “A” (rear side).
5. Push vehicle slowly ahead to rotate wheels 180 degrees (1/2 turn). If wheels have rotated more than 180 degrees (1/2 turn), try the above procedure again from the beginning. Never push vehicle backward.
6. Measure distance “B” (front side).

Total toe-in : **Refer to RSU-12, "Wheel Alignment (Unladen*)"** .

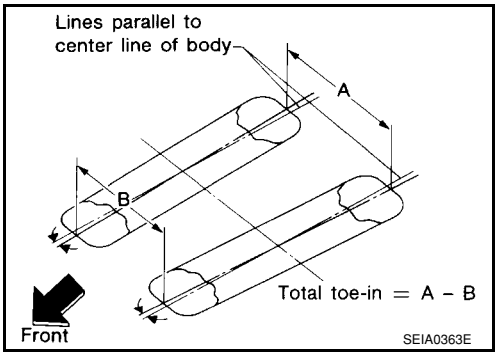

Component

INFOID:0000000001703738

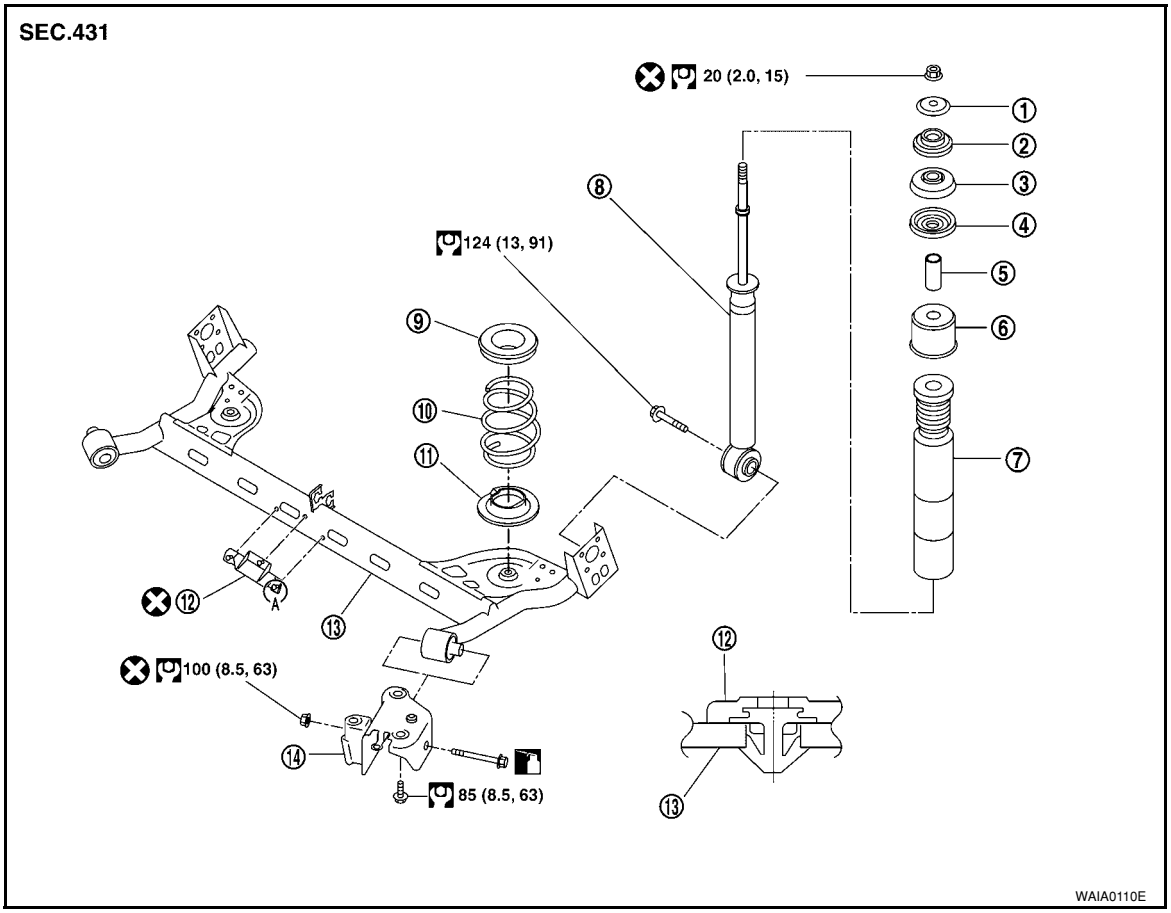

1. Washer (upper)
2. Bushing (upper)
3. Bushing (lower)
4. Washer (lower)
5. Distance tube
6. Bound bumper cover
7. Bound bumper
8. Shock absorber
9. Rear spring rubber seat (upper)
10. Coil spring
11. Rear spring rubber seat (lower)
12. Brake tube protector
13. Rear suspension beam
14. Rear suspension beam bracket

SHOCK ABSORBER

Removal and Installation

INFOID:0000000001703739

REMOVAL

1. Remove rear tires from vehicle using power tool.
2. Remove wheel sensor from wheel hub and bearing assembly and rear suspension beam. Refer to BRC-32 .
   CAUTION:
   Do not pull on wheel sensor harness.
3. Remove shock absorber mask from trunk side finisher using a flat-bladed screwdriver. Refer to EI-51 .
   CAUTION:
   Wrap the tip of a screwdriver with cloth to avoid damaging components.
4. Set jack under rear suspension beam.
5. Remove upper nut of the shock absorber, and then remove washer (upper), bushing (upper) from shock absorber.

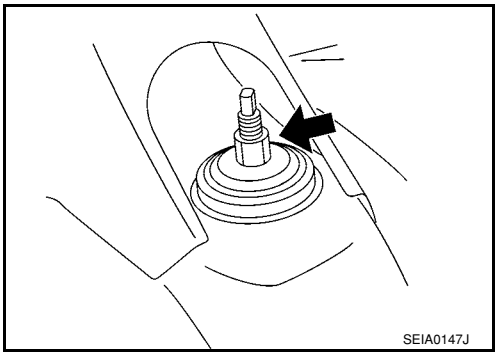

6. Remove shock absorber lower side bolt.
7. Gradually lower the jack, and remove the bushing (lower), washer (lower), distance tube, bound bumper cover, bound bumper and shock absorber from vehicle.

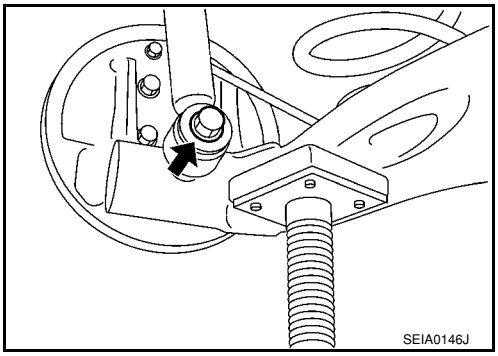

INSPECTION AFTER REMOVAL

Shock Absorber
Check the following:
- Shock absorber for deformation, cracks or damage, and replace if necessary.
- Piston rod for damage, uneven wear or distortion, and replace if necessary .

Bound Bumper and Bushing
Check bound bumper and bushing for cracks, deformation or other damage, and replace applicable parts if necessary .

INSTALLATION

- Installation is in the reverse order of removal. For tightening torque, refer to RSU-7, "Component" .

- When installing body side bushing (upper), install the projection to the body side hole securely.

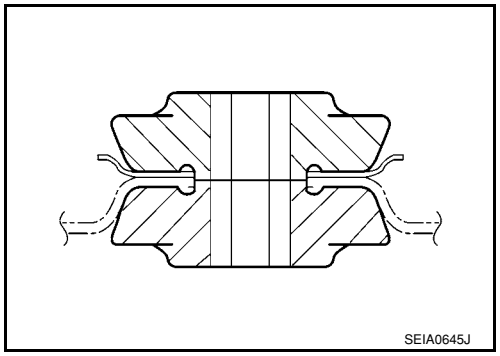

COIL SPRING

Removal and Installation

INFOID:0000000001703740

REMOVAL

1. Remove rear tires from vehicle using power tool.
2. Remove wheel sensor from wheel hub and bearing assembly. Refer to BRC-32 .
   CAUTION:
   Do not pull on wheel sensor harness.
3. Separate brake tube from wheel cylinder. Refer to BR-10 .
4. Set jack under rear suspension beam.
5. Remove shock absorber lower side bolt. Refer to RSU-8 .
6. Gradually lower the jack, and then remove coil spring and rear spring rubber seat (upper and lower).

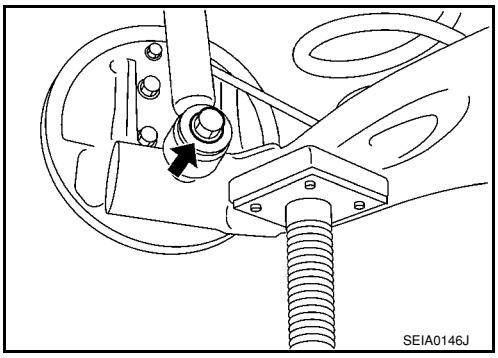

INSPECTION AFTER REMOVAL

Check coil spring and spring rubber seat for deformation, cracks, and damage, and replace it if a malfunction is detected.

INSTALLATION

- Installation is in the reverse order of removal. For tightening torque, refer to RSU-7, "Component" .
- When installing spring, be sure to securely install the spring end position aligned to flush of rear spring rubber seat (lower) as shown.

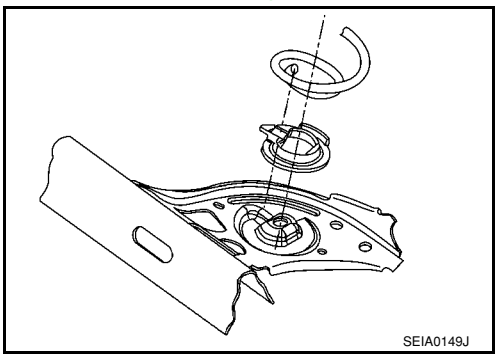

REAR SUSPENSION BEAM

Removal and Installation

INFOID:0000000001703741

REMOVAL

1. Remove rear tires from vehicle using power tool.
2. Separate parking brake rear cable from rear drum brake and rear suspension beam. Refer to PB-4 .
3. Remove wheel sensor and wheel sensor harness from wheel hub and bearing assembly and rear suspension beam. Refer to BRC-32 .
4. Remove lock plate and separate brake tube from brake hose. Refer to BR-10 .
5. Remove wheel hub and bearing assembly and back plate. Refer to RAX-4 .
6. Set jack under rear suspension beam.
7. Remove coil spring (left/right). Refer to RSU-10, "Removal and Installation" .
8. Remove bolts between body and rear suspension beam bracket. Refer to RSU-7, "Component" .
9. Gradually lower the jack, and then remove rear suspension beam from vehicle.

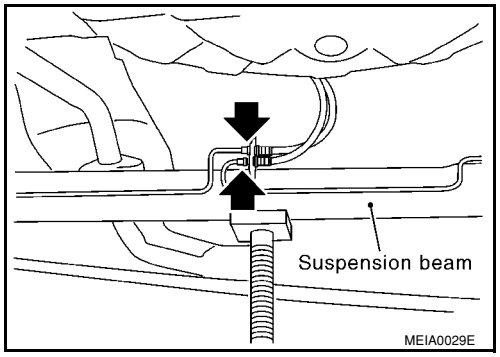

10. Remove the rear suspension beam bracket bolt and nut, and then remove rear suspension beam bracket from rear suspension beam. Refer to RSU-7, "Component" .
11. Remove brake tube protector from rear suspension beam..

INSPECTION AFTER REMOVAL

Check components for deformation, cracks, and other damage, and replace if necessary.

INSTALLATION

- Installation is in the reverse order of removal. For tightening torque, refer to RSU-7, "Component" .
- Perform final tightening of rear suspension beam and rear suspension beam bracket (rubber bushing) under unladen conditions with tires on level ground.
- Refill with new brake fluid and bleed air. Refer to BR-8, "Bleeding Brake System" .
- Check the following after finishing work.
- Parking brake operation (stroke): Refer to PB-4, "On-Vehicle Service" .
- Wheel sensor harness for proper connection: Refer to BRC-32 .

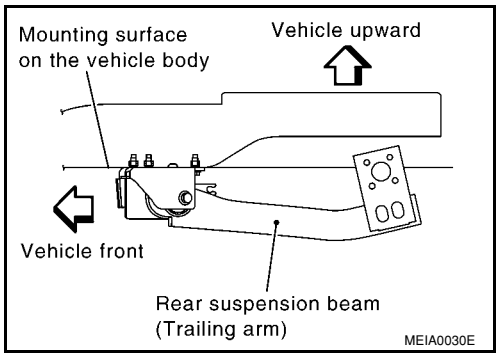

SERVICE DATA AND SPECIFICATIONS (SDS)

Wheel Alignment (Unladen*)

INFOID:0000000001703742

Camber Degree minute (Decimal degree)		Minimum	– 2° 01′ (– 2.02°)
		Nominal	– 1° 31′ (– 1.52°)
		Maximum	– 1° 01′ (– 1.02°)
Total toe-in	Distance (A - B)	Minimum	1.0 mm (0.039 in)
		Nominal	5.0 mm (0.197 in)
		Maximum	9.0 mm (0.354 in)
	Angle (A - B) Degree minute (Decimal degree)	Minimum	0° 3′ (0.05°)
		Nominal	0° 14′ (0.23°)
		Maximum	0° 24 (0.41°)

*: Fuel, engine coolant and engine oil full. Spare tire, jack, hand tools and mats in designated positions.

Wheelarch Height (Unladen*)

INFOID:0000000001703743

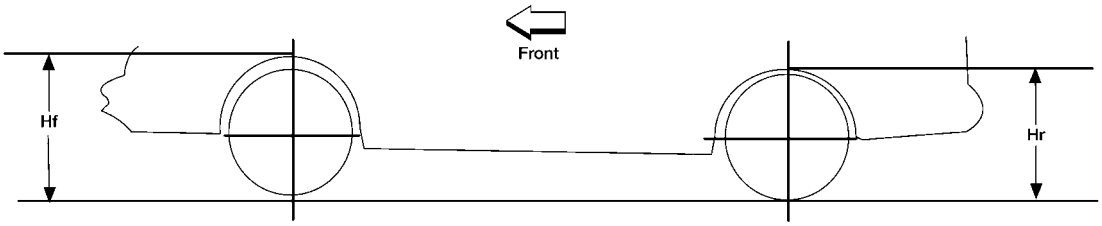

LEIA0085E

Applied model	185/65R15
Front (Hf)	686 mm (27.01 in)
Rear (Hr)	684 mm (26.97 in)

*: Fuel, engine coolant and engine oil full. Spare tire, jack, hand tools and mats in designated positions.

SECTION SB
SEAT BELTS

CONTENTS

PRECAUTION 2

PRECAUTIONS 2
Precaution for Supplemental Restraint System (SRS) "AIR BAG" and "SEAT BELT PRE-TENSIONER" 2
Precaution for Seat Belt Service 2

ON-VEHICLE REPAIR 3

SEAT BELTS 3
Removal and Installation of Front Seat Belt 3
Removal and Installation of Rear Seat Belt 5
Seat Belt Inspection 7

LATCH (LOWER ANCHORS AND TETHER FOR CHILDREN) SYSTEM 10
Removal and Installation 10

TOP TETHER STRAP CHILD RESTRAINT 11
Removal and Installation 11

PRECAUTION

PRECAUTIONS

Precaution for Supplemental Restraint System (SRS) "AIR BAG" and "SEAT BELT PRE-TENSIONER"

INFOID:0000000001703897

The Supplemental Restraint System such as “AIR BAG” and “SEAT BELT PRE-TENSIONER”, used along with a front seat belt, helps to reduce the risk or severity of injury to the driver and front passenger for certain types of collision. This system includes seat belt switch inputs and dual stage front air bag modules. The SRS system uses the seat belt switches to determine the front air bag deployment, and may only deploy one front air bag, depending on the severity of a collision and whether the front occupants are belted or unbelted.Information necessary to service the system safely is included in the SR and SB section of this Service Manual.

WARNING:

- **To avoid rendering the SRS inoperative, which could increase the risk of personal injury or death in the event of a collision which would result in air bag inflation, all maintenance must be performed by an authorized NISSAN/INFINITI dealer.**
- **Improper maintenance, including incorrect removal and installation of the SRS, can lead to personal injury caused by unintentional activation of the system. For removal of Spiral Cable and Air Bag Module, see the SRS section.**
- **Do not use electrical test equipment on any circuit related to the SRS unless instructed to in this Service Manual. SRS wiring harnesses can be identified by yellow and/or orange harnesses or harness connectors.**

Precaution for Seat Belt Service

INFOID:0000000001703898

CAUTION:

- **Before removing the front seat belt pre-tensioner assembly, turn the ignition switch off, disconnect the both battery cables and wait at least 3 minutes.**
- **After replacing or reinstalling front seat belt pre-tensioner assembly, or reconnecting front seat belt pre-tensioner connector, check the system function. Refer to SRS-18, "SRS Operation Check".**
- **Do not disassemble buckle or seat belt assembly.**
- **Do not reuse seat belt anchor bolts after removal. Replace with new ones.**
- **Replace anchor bolts if they are deformed or worn out.**
- **Never oil tongue and buckle.**
- **If any component of seat belt assembly is questionable, do not repair. Replace the whole seat belt assembly.**
- **If webbing is cut, frayed, or damaged, replace seat belt assembly.**
- **When replacing seat belt assembly, use a genuine NISSAN seat belt assembly.**

AFTER A COLLISION

WARNING:

- **Inspect all seat belt assemblies including retractors and attaching hardware after any collision.**
- **NISSAN recommends that all seat belt assemblies in use during a collision be replaced unless the collision was minor and the belts show no damage and continue to operate properly. Failure to do so could result in serious personal injury in an accident. Seat belt assemblies not in use during a collision should also be replaced if either damage or improper operation is noted. Seat belt pre-tensioner should be replaced even if the seat belts are not in use during a frontal collision in which the air bags are deployed.**

Replace any seat belt assembly (including anchor bolts) if:

- The seat belt was in use at the time of a collision (except for minor collisions and the belts, retractors and buckles show no damage and continue to operate properly).
- The seat belt was damaged in an accident. (i.e. torn webbing, bent retractor or guide).
- The seat belt attaching point was damaged in an accident. Inspect the seat belt attaching area for damage or distortion and repair as necessary before installing a new seat belt assembly.
- Anchor bolts are deformed or worn out.
- The seat belt pre-tensioner should be replaced even if the seat belts are not in use during the collision in which the air bags are deployed.

ON-VEHICLE REPAIR

SEAT BELTS

Removal and Installation of Front Seat Belt

INFOID:0000000001703899

SEC. 868

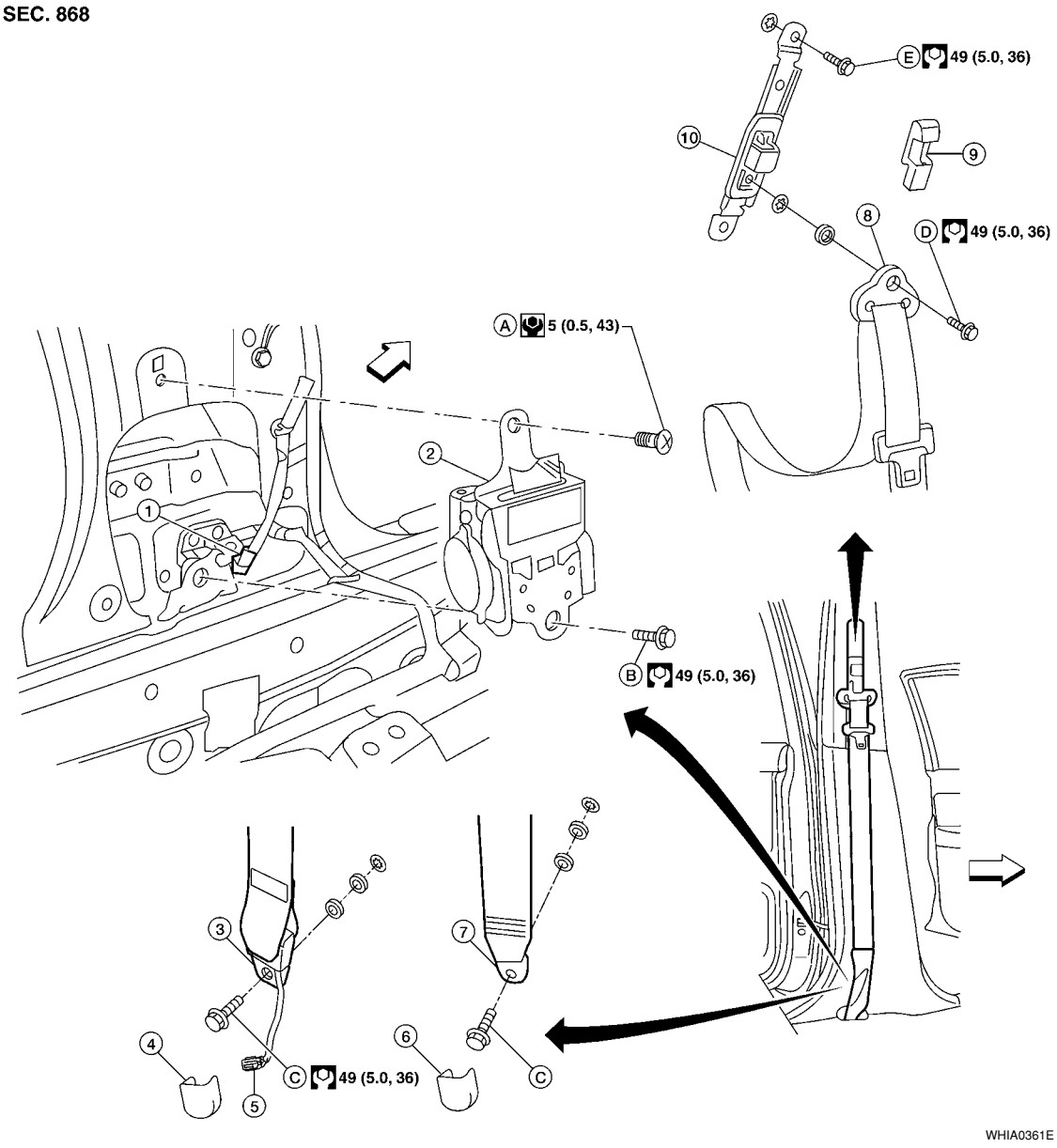

1. Seat belt pre-tensioner connector	2. Seat belt retractor	3. Outer anchor RH (belt tension sensor)
4. Anchor cover (belt tension sensor)	5. Belt tension sensor connector	6. Anchor cover
7. Outer anchor LH	8. D-ring anchor	9. Adjuster cover
10. Seat belt adjuster	A. Retractor bolt upper	B. Retractor anchor bolt
C. Outer anchor bolt	D. D-ring anchor bolt	E. Adjuster anchor bolt
⇐ Vehicle front		

CAUTION:
Before servicing the SRS, turn the ignition switch off, disconnect both battery cables and wait at least 3 minutes.

REMOVAL OF SEAT BELT RETRACTOR

1. Disconnect both the negative and positive battery cables, then wait at least 3 minutes.
2. Remove the adjuster cover and D-ring anchor bolt.
3. Remove both the center pillar upper and lower garnish. Refer to EI-37.

   WARNING:
   Do not reuse center pillar upper garnish if removed.
4. Pull the floor trim away from center pillar.
5. Disconnect seat belt tension sensor connector and pre-tensioner connector. Refer to SRS-6, "Direct-connect SRS Component Connectors".

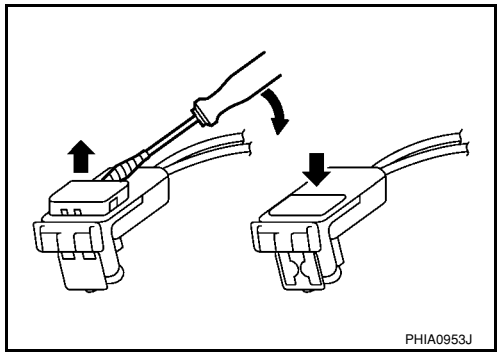

6. Remove the outer anchor bolt.
7. Remove the seat belt retractor screw and anchor bolt, then remove the seat belt retractor.

INSTALLATION OF SEAT BELT RETRACTOR

Installation is in the reverse order of removal.

REMOVAL OF SEAT BELT BUCKLE

1. Remove the front seat, refer to SE-11, "Removal and Installation".
2. Disconnect the seat belt buckle harness connector (1).
   ⇐: Vehicle front
3. Remove the anchor bolt (A), then remove the seat belt buckle (2).

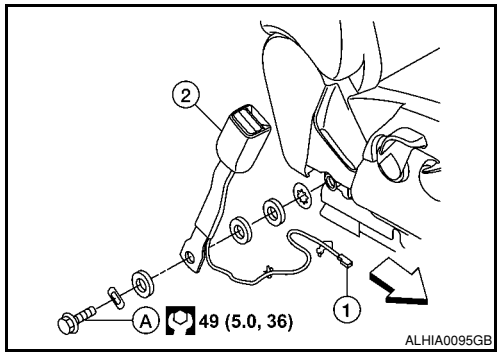

INSTALLATION OF SEAT BELT BUCKLE

Installation is in the reverse order of removal.

Removal and Installation of Rear Seat Belt

INFOID:0000000001703900

Hatchback

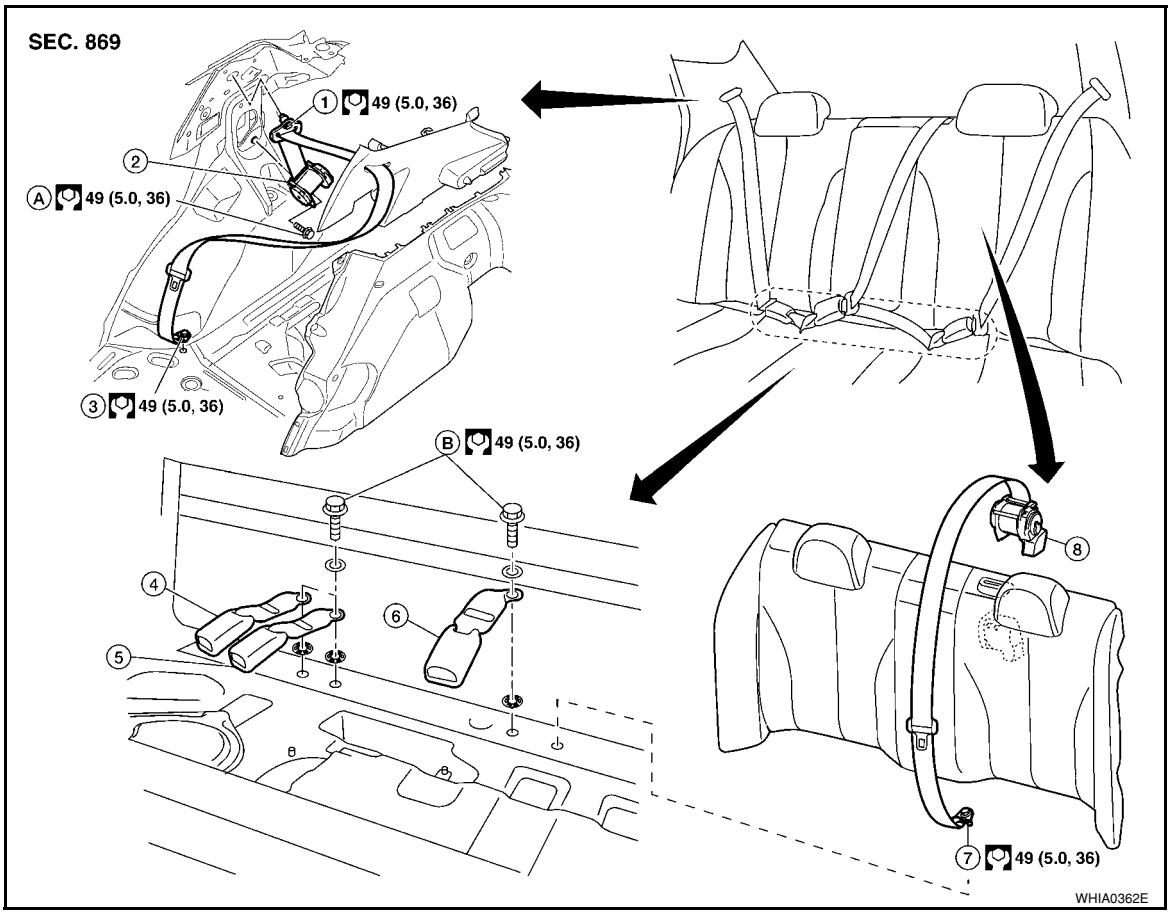

1. D-ring anchor	2. Outer seat belt retractor RH	3. Outer anchor bolt
4. Seat belt buckle center	5. Seat belt buckle RH	6. Seat belt buckle LH
7. Center anchor bolt	8. Center seat belt retractor	A. Outer retractor anchor bolt RH
B. Buckle anchor bolt		

Sedan

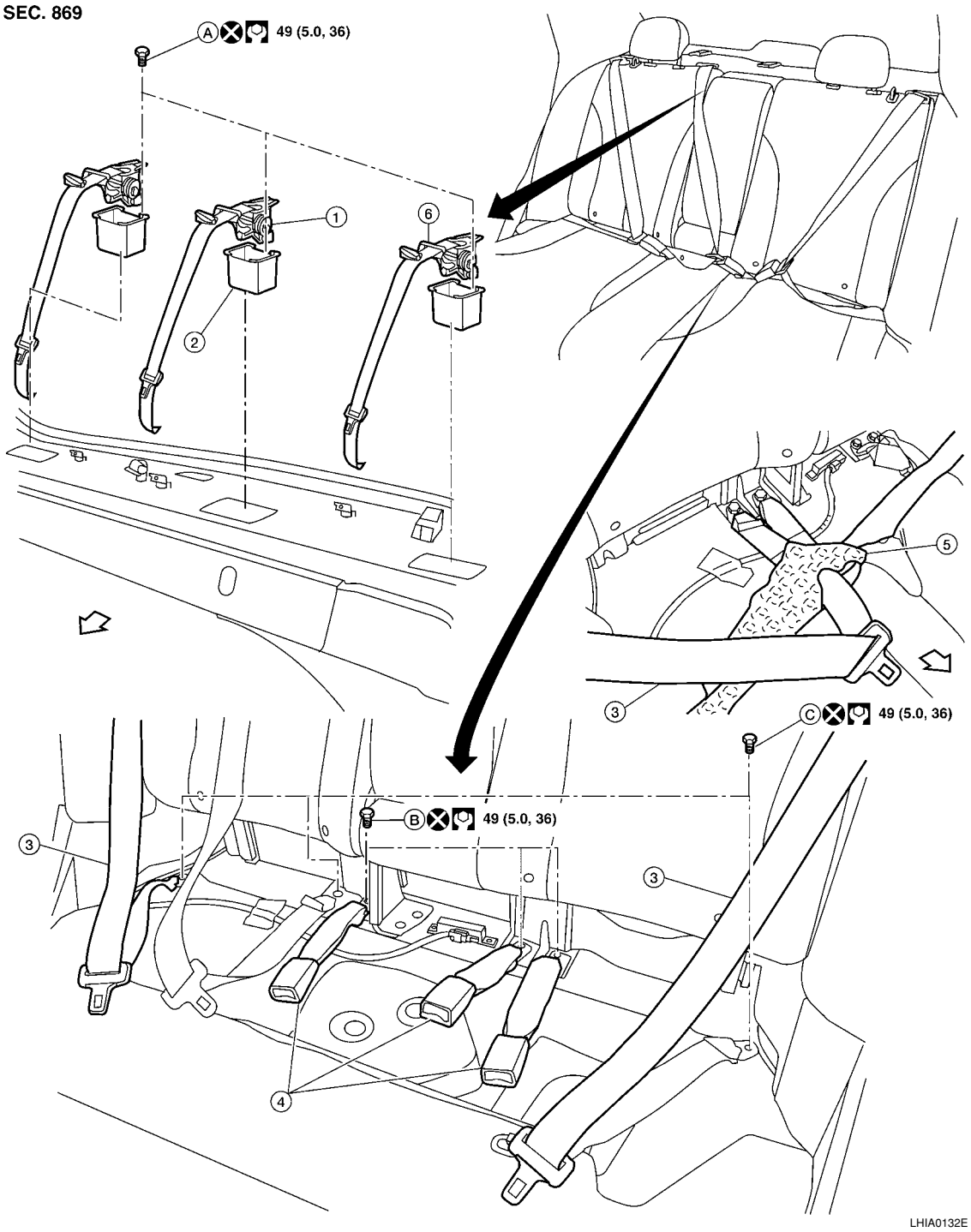

1.	Seat belt retractor	2.	Seat belt retractor cup	3.	Rear seat belt
4.	Seat belt buckle	5.	Rear seat cushion	6.	Seat belt escutcheon
A.	Seat belt retractor bolt	B.	Buckle anchor bolt	C.	Seat belt anchor bolt
⇐	Vehicle front	C.	Seat belt anchor bolt		Vehicle front

REMOVAL OF OUTER SEAT BELT RETRACTOR - HATCHBACK

1. Remove rear seatback, cushion and seat back side, refer to SE-14.
2. Remove the outer anchor bolt.
3. Remove the luggage side lower finisher, refer to EI-51.
4. Remove the D-ring anchor bolt.

5. Remove the outer retractor anchor bolt, then remove outer seat belt retractor.

INSTALLATION OF OUTER SEAT BELT RETRACTOR - HATCHBACK

Installation is in the reverse order of removal.

REMOVAL OF OUTER SEAT BELT RETRACTOR - SEDAN

1. Remove rear seat cushion, refer to SE-14.
2. Remove outer seat belt anchor bolt.
3. Release the seat belt escutcheon, then remove from belt.
4. Remove rear parcel shelf finisher, refer to XXX.
5. Remove outer seat belt retractor bolt, then remove outer seat belt retractor.

INSTALLATION OF OUTER SEAT BELT RETRACTOR - SEDAN

Installation is in the reverse order of removal.

REMOVAL OF CENTER SEAT BELT RETRACTOR - HATCHBACK

1. Remove and disassemble the rear seat cushion, refer to SE-14.
2. Remove the center seat belt retractor.

INSTALLATION OF CENTER SEAT BELT RETRACTOR - HATCHBACK

Installation is in the reverse order of removal.

REMOVAL OF CENTER SEAT BELT RETRACTOR - SEDAN

1. Lift front edge of rear seat cushion and slide forward.
2. Remove center seat belt anchor bolt (A), then pull center seat belt through rear seat cushion (1).
   ⇐ Vehicle front
3. Release the seat belt escutcheon, then remove from belt.
4. Remove rear parcel shelf finisher, refer to XXX.
5. Remove the bolt, then remove center seat belt retractor.

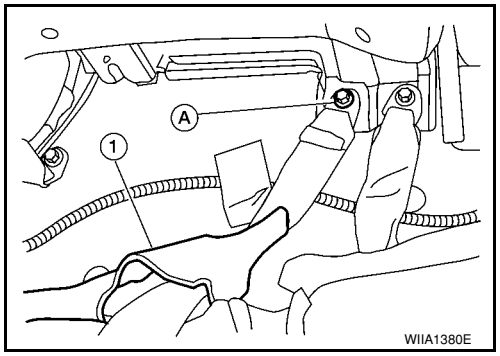

INSTALLATION OF CENTER SEAT BELT RETRACTOR - SEDAN

Installation is in the reverse order of removal.

REMOVAL OF SEAT BELT BUCKLE

1. Remove rear seat cushion, refer to SE-14.
2. Remove buckle anchor bolt, then remove seat belt buckle.

INSTALLATION OF SEAT BELT BUCKLE

Installation is in the reverse order of removal.

Seat Belt Inspection

INFOID:0000000001703901

AFTER A COLLISION

WARNING:

Inspect all seat belt assemblies including retractors and attaching hardware after any collision. NISSAN recommends that all seat belt assemblies in use during a collision be replaced unless the collision was minor and the belts show no damage and continue to operate properly. Failure to do so could result in serious personal injury in an accident. Seat belt assemblies not in use during a collision should also be replaced if either damage or improper operation is noted. Seat belt pre-tensioner should be replaced even if the seat belts are not in use during a frontal collision in which the air bags are deployed.

Replace any seat belt assembly (including anchor bolts) if:

- The seat belt was in use at the time of a collision (except for minor collisions and the belts, retractors and buckles show no damage and continue to operate properly).

- The seat belt was damaged in an accident. (i.e. torn webbing, bent retractor or guide, etc.)
- The seat belt attaching point was damaged in an accident. Inspect the seat belt attaching area for damage or distortion and repair as necessary before installing a new seat belt assembly.
- Anchor bolts are deformed or worn out.
- The seat belt pre-tensioner should be replaced even if the seat belts are not in use during a frontal collision in which the air bags are deployed.

PRELIMINARY CHECKS

1. Check the seat belt warning lamp/chime for proper operation as follows:

a. Switch ignition ON. The seat belt warning lamp should illuminate. Also, the seat belt warning chime should sound for about seven seconds.

b. Fasten driver's seat belt. The seat belt warning lamp should go out and the chime (if sounding) should stop.

2. If the air bag warning lamp is blinking, conduct self-diagnosis using CONSULT-II, and air bag warning lamp. Refer to SRS-18, "SRS Operation Check".

3. Check that the seat belt retractor, seat belt anchor and buckle bolts are securely attached.

4. Check the shoulder seat belt guide and shoulder belt height adjuster for front seats. Make sure guide swivels freely and that webbing lays flat and does not bind in guide. Make sure height adjuster operates properly and holds securely.

5. Check retractor operation:

a. Fully extend the seat belt webbing and check for twists, tears or other damage.

b. Allow the seat belt to retract. Make sure that webbing returns smoothly and completely into the retractor. If the seat belt does not return smoothly, wipe the inside of the loops with a clean paper cloth. Dirt build-up in the loops of the upper anchors can cause the seat belts to retract slowly.

c. Fasten the seat belt. Check the seat belt returns smoothly and completely to the retractor. If the webbing does not return smoothly, the cause may be an accumulation of dust or dirt. Use the “SEAT BELT TAPE SET” and perform the following steps.

Inspect the front seat belt though-anchor

1. Pull the seat belt out to a length of 500 mm (19.69 in) or more.
2. Use a clip or other device to attach the seat belt at the center pillar webbing opening.
3. Pass a thin wire though the D-ring anchor webbing opening. Hold both ends of the wire and pull taut while moving it up and down several times along the webbing opening surface to remove matter stuck there.
4. Any dirt that cannot be removed with the wire can be removed by cleaning the opening with a clean cloth.
5. Apply tape at the point where the webbing contacts the though-anchor webbing opening.
   NOTE:
   Apply the tape so that there is no looseness or wrinkling.
6. Remove the clip attaching the seat belt and check that the webbing returns smoothly.

6. Repeat steps above as necessary to check the other seat belts.

SEAT BELT RETRACTOR ON-VEHICLE CHECK

Emergency Locking Retractors (ELR) and Automatic Locking Retractors (ALR)

NOTE:

All seat belt retractors are of the Emergency Locking Retractors (ELR) type. In an emergency (sudden stop) the retractor will lock and prevent the webbing from extending any further. All 3-point type seat belt retractors except the driver's seat belt also have an Automatic Locking Retractors (ALR) mode. The ALR mode (also called child restraint mode) is used when installing child seats. The ALR mode is activated when the seat belt is fully extended. When the webbing is then retracted partially, the ALR mode automatically locks the seat belt in a specific position so the webbing cannot be extended any further. To cancel the ALR mode, allow the seat belt to fully wind back into the retractor.

Check the seat belt retractors using the following test(s) to determine if a retractor assembly is operating properly.

ELR Function Stationary Check

Grasp the shoulder webbing and pull it forward quickly. The retractor should lock and prevent the belt from extending further.

ALR Function Stationary Check

1. Pull out entire length of seat belt from retractor until a click is heard.
2. Retract the webbing partially. A clicking noise should be heard as the webbing retracts, indicating that the retractor is in the Automatic Locking Retractors (ALR) mode.
3. Grasp the seat belt and try to pull out the retractor. The webbing must lock and not extend any further. If NG, replace the retractor assembly.
4. Allow the entire length of the webbing to retract to cancel the automatic locking mode.

ELR Function Moving Check

WARNING:

Perform the following test in a safe, open area clear of other vehicles and obstructions (for example, a large, empty parking lot). Road surface must be paved and dry. DO NOT perform the following test on wet or gravel roads or on public streets and highways. This could result in an accident and serious personal injury. The driver and passenger must be prepared to brace themselves in the event the retractor does not lock.

1. Fasten driver's seat belt. Buckle a passenger into the seat for the belt that is to be tested.
2. Proceed to the designated safe area.
3. Drive the vehicle at approximately 16 km/h (10 MPH). Notify any passengers of a pending sudden stop and the driver and passenger must be prepared to brace themselves in the event the retractor does not lock, apply brakes firmly and make a very hard stop.

During the stop, seat belts should lock and not be extended. If the seat belt retractor assembly does not lock, perform the retractor off-vehicle check.

SEAT BELT RETRACTOR OFF-VEHICLE CHECK

1. Remove the seat belt retractor. Refer to SB-3.
2. Slowly pull out seat belt webbing while tilting the retractor assembly forward from the installed position without twisting the retractor assembly as shown in the illustration.

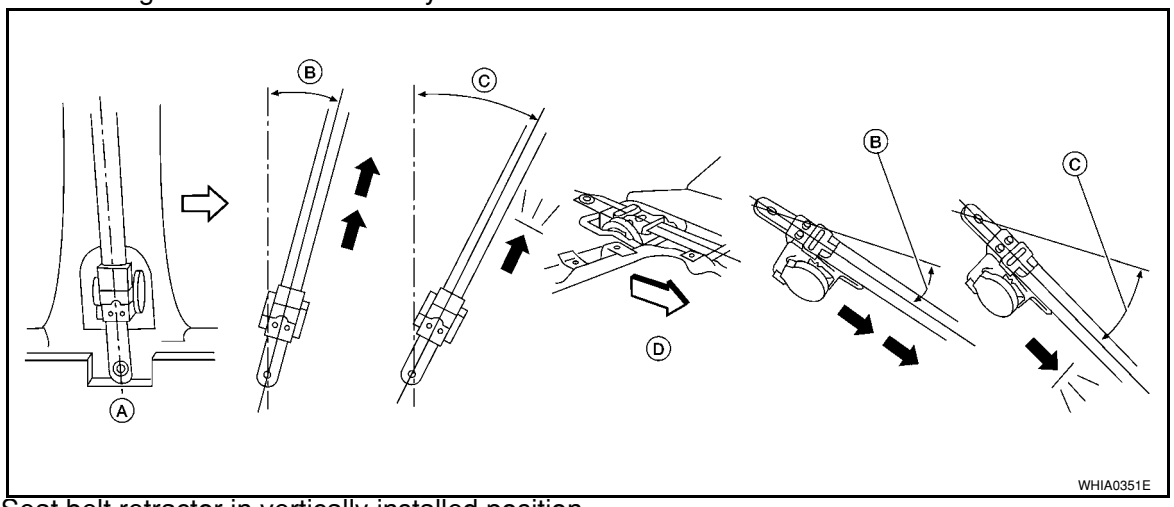

A: Seat belt retractor in vertically installed position.
B: With 15° or less tilt, the webbing can be pulled out.
C: With 35° or more tilt, the webbing can not be pulled out.
D: Seat belt retractor in horizontally installed position.
⇦: Vehicle front.

If the seat belt does not operate properly within the specifications, replace the seat belt retractor assembly.

LATCH (LOWER ANCHORS AND TETHER FOR CHILDREN) SYSTEM

Removal and Installation

INFOID:0000000001703902

NOTE:
The LATCH (Lower Anchors and Tether for Children) system is not serviceable.

TOP TETHER STRAP CHILD RESTRAINT

Removal and Installation

INFOID:0000000001703903

REMOVAL

1. Disconnect the negative battery cable.
2. Remove the rear parcel shelf finisher. Refer to EI-42, "Removal and Installation".
3. Remove the bolt (A), then remove the top tether bracket (1) from the body panel.

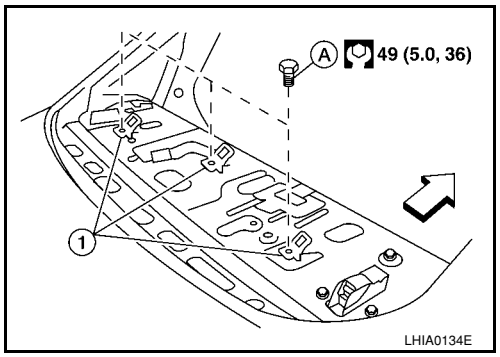

INSTALLATION

Installation is in the reverse order of removal.

SECTION SC
STARTING & CHARGING SYSTEM

CONTENTS

SERVICE INFORMATION 2

PRECAUTIONS 2
Precaution for Supplemental Restraint System (SRS) "AIR BAG" and "SEAT BELT PRE-TENSIONER" 2

PREPARATION 3
Special Service Tool 3
Commercial Service Tool 3

BATTERY 4
How to Handle Battery 4
Trouble Diagnosis with Battery Service Center 6
Removal and Installation 6

STARTING SYSTEM 8
System Description 8
Wiring Diagram - START - 10
Trouble Diagnosis with Starting/Charging System Tester 15
Removal and Installation 19

CHARGING SYSTEM 20
System Description 20
Wiring Diagram - CHARGE - 21
Trouble Diagnosis with Starting/Charging System Tester 21
Removal and Installation 24

SERVICE DATA AND SPECIFICATIONS (SDS) 26
Battery 26
Starter 26
Generator 26

SERVICE INFORMATION

PRECAUTIONS

Precaution for Supplemental Restraint System (SRS) "AIR BAG" and "SEAT BELT PRE-TENSIONER"

INFOID:0000000001704342

The Supplemental Restraint System such as “AIR BAG” and “SEAT BELT PRE-TENSIONER”, used along with a front seat belt, helps to reduce the risk or severity of injury to the driver and front passenger for certain types of collision. This system includes seat belt switch inputs and dual stage front air bag modules. The SRS system uses the seat belt switches to determine the front air bag deployment, and may only deploy one front air bag, depending on the severity of a collision and whether the front occupants are belted or unbelted.
Information necessary to service the system safely is included in the SRS and SB section of this Service Manual.

WARNING:

- **To avoid rendering the SRS inoperative, which could increase the risk of personal injury or death in the event of a collision which would result in air bag inflation, all maintenance must be performed by an authorized NISSAN/INFINITI dealer.**
- **Improper maintenance, including incorrect removal and installation of the SRS, can lead to personal injury caused by unintentional activation of the system. For removal of Spiral Cable and Air Bag Module, see the SRS section.**
- **Do not use electrical test equipment on any circuit related to the SRS unless instructed to in this Service Manual. SRS wiring harnesses can be identified by yellow and/or orange harnesses or harness connectors.**

PREPARATION

Special Service Tool

INFOID:0000000001704343

The actual shapes of Kent-Moore tools may differ from those of special service tools illustrated here.

Tool number (Kent-Moore No.) Tool name	Description
— (J-48087) Battery Service Center 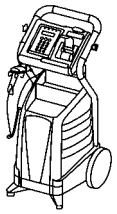 WKIA5280E	Tests batteries. For instructions, refer to Technical Service Bulletin and Battery Service Center User Guide.
— (J-44373) Model 620 Starting/Charging System Tester 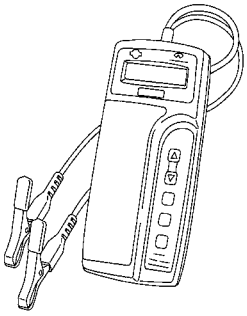 SEL403X	Tests starting and charging system. For operating instructions, refer to Technical Service Bulletin.

Commercial Service Tool

INFOID:0000000001704344

Tool name	Description
Power tool 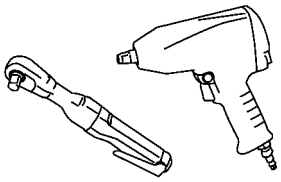 PBIC0190E	Loosening bolts and nuts

BATTERY

How to Handle Battery

INFOID:0000000001704345

CAUTION:
- **If it becomes necessary to start the engine with a booster battery and jumper cables, use a 12-volt booster battery.**
- **After connecting battery cables, ensure that they are tightly clamped to battery terminals for good contact.**
- **Never add distilled water through the hole used to check specific gravity.**

METHODS OF PREVENTING OVER-DISCHARGE

The following precautions must be taken to prevent over-discharging a battery.
- The battery surface (particularly its top) should always be kept clean and dry.
- The terminal connections should be clean and tight.
- At every routine maintenance, check the electrolyte level.
  This also applies to batteries designated as “low maintenance” and “maintenance-free”.

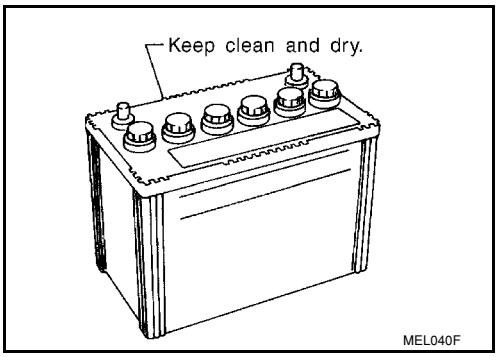

- When the vehicle is not going to be used over a long period of time, disconnect the negative battery terminal.

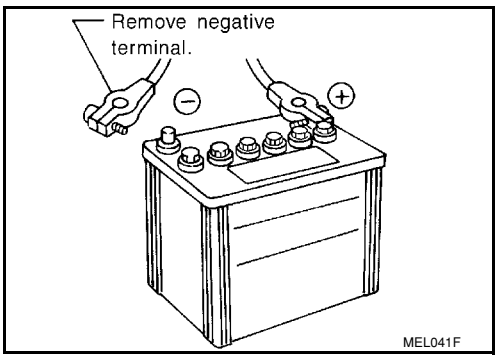

- Check the charge condition of the battery.
  Periodically check the specific gravity of the electrolyte. Keep a close check on charge condition to prevent over-discharge.

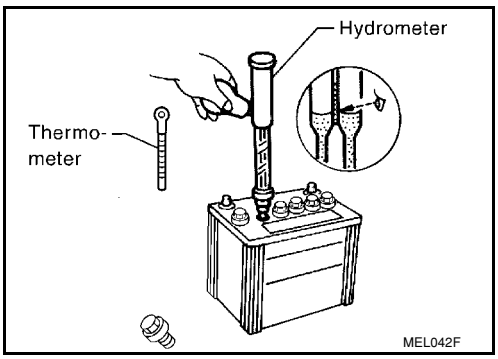

CHECKING ELECTROLYTE LEVEL

WARNING:
Do not allow battery fluid to come in contact with skin, eyes, fabrics, or painted surfaces. After touching a battery, do not touch or rub your eyes until you have thoroughly washed your hands. If acid contacts eyes, skin or clothing, immediately flush with water for 15 minutes and seek medical attention.

- Remove the cell plug using a suitable tool.
- Add distilled water up to the MAX level.

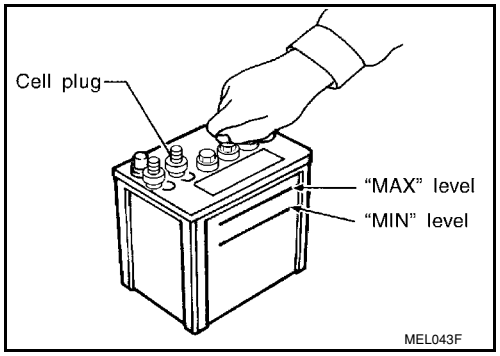

Sulfation

A battery will be completely discharged if it is left unattended for a long time and the specific gravity will become less than 1.100. This may result in sulfation on the cell plates.
To determine if a battery has been sulfated, note its voltage and current when charging it. Less current and higher voltage are observed in the initial stage of charging sulfated batteries, as shown.
A sulfated battery may sometimes be brought back into service by means of a long, slow charge, 12 hours or more, followed by a battery capacity test.

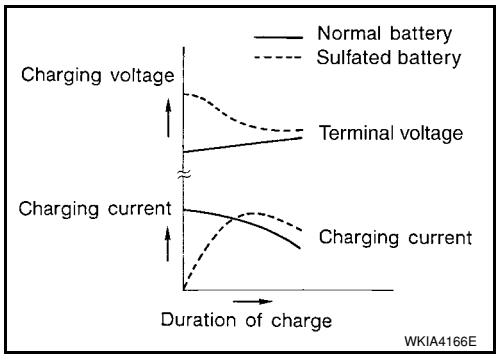

SPECIFIC GRAVITY CHECK

1. Read hydrometer and thermometer indications at eye level.
2. Use the following chart to correct your hydrometer reading according to electrolyte temperature.

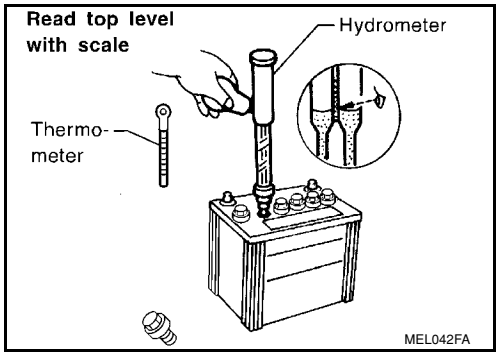

Hydrometer Temperature Correction

Battery electrolyte temperature °C (°F)	Add to specific gravity reading
71 (160)	0.032
66 (150)	0.028
60 (140)	0.024
54 (130)	0.020
49 (120)	0.016
43 (110)	0.012
38 (100)	0.008
32 (90)	0.004
27 (80)	0
21 (70)	–0.004
16 (60)	–0.008
10 (50)	–0.012
4 (40)	–0.016
–1 (30)	–0.020

Battery electrolyte temperature °C (°F)	Add to specific gravity reading
–7 (20)	–0.024
–12 (10)	–0.028
–18 (0)	–0.032

Corrected specific gravity	Approximate charge condition
1.260 - 1.280	Fully charged
1.230 - 1.250	3/4 charged
1.200 - 1.220	1/2 charged
1.170 - 1.190	1/4 charged
1.140 - 1.160	Almost discharged
1.110 - 1.130	Completely discharged

CHARGING THE BATTERY

CAUTION:

- **Do not "quick charge" a fully discharged battery.**
- **Keep the battery away from open flame while it is being charged.**
- **When connecting the charger, connect the leads first, then turn on the charger. Do not turn on the charger first, as this may cause a spark.**
- **If battery electrolyte temperature rises above 55°C (131°F), stop charging. Always charge battery at a temperature below 55°C (131°F).**

Charging Rates

Amps	Time
50	1 hour
25	2 hours
10	5 hours
5	10 hours

Do not charge at more than 50 ampere rate.

NOTE:

The ammeter reading on your battery charger will automatically decrease as the battery charges. This indicates that the voltage of the battery is increasing normally as the state of charge improves. The charging amps indicated above refer to initial charge rate.

- If, after charging, the specific gravity of any two cells varies more than 0.050, the battery should be replaced.

Trouble Diagnosis with Battery Service Center

INFOID:0000000001704346

For battery testing, use Battery Service Center (J-48087). For details and operating instructions, refer to Technical Service Bulletin and/or Battery Service Center User Guide.

Removal and Installation

INFOID:0000000001704347

REMOVAL

1. Loosen battery terminal nuts (A), and disconnect both battery cables from battery terminal.
   CAUTION:
   When disconnecting, disconnect the battery cable from the negative terminal first.
2. Remove battery frame nuts (B) and battery frame.
3. Remove battery shield.
4. Remove battery.

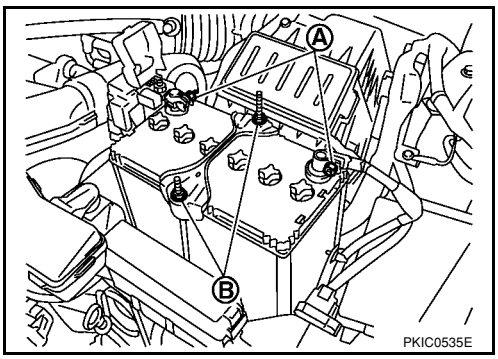

INSTALLATION

Installation is in the reverse order of removal.

CAUTION:

When connecting, connect the battery cable to the positive terminal first.

Battery frame nut	**: 3.9 N·m (0.40 kg-m, 35 in-lb)**
Battery terminal nut	**: 5.4 N·m (0.55 kg-m, 48 in-lb)**

STARTING SYSTEM

System Description

INFOID:0000000001704348

M/T Models

Power is supplied at all times
- to starter motor terminal B, and
- through 40A fusible link (letter **h** , located in the fuse and fusible link box)
- to ignition switch terminal B.

With the ignition switch in the START position, power is supplied
- from ignition switch terminal ST
- to IPDM E/R terminal 21.

With the ignition switch in the ON or START position, power is supplied
- through 10A fuse (No. 49, located in the IPDM E/R)
- to the clutch interlock switch terminal 1.

With the clutch pedal depressed, power is supplied
- through the clutch interlock switch terminal 2
- to IPDM E/R terminal 35.

Ground is supplied at all times
- to IPDM E/R terminals 39 and 59
- through body grounds E15 and E24.

If the IPDM E/R receives a starter relay request ON signal from the BCM over the CAN communication lines, the IPDM E/R grounds the starter relay and power is supplied
- through terminal 19 of the IPDM E/R
- to terminal S of the starter motor.

The starter motor magnetic switch energizes closing the circuit between the battery and the starter motor. The starter motor is case ground through the cylinder block. With power and ground supplied, the starter motor operates.

A/T Models

Power is supplied at all times
- to starter motor terminal B, and
- through 40A fusible link (letter **h** , located in the fuse and fusible link box)
- to ignition switch terminal B.

With the ignition switch in the START position, power is supplied
- from ignition switch terminal ST
- to IPDM E/R terminal 21.

With the ignition switch in the ON or START position, power is supplied
- through 10A fuse (No. 54, located in the IPDM E/R)
- to park/neutral position (PNP) switch terminal 1.

With the selector lever in the P or N position, power is supplied
- through PNP switch terminal 2
- to IPDM E/R terminal 35.

Ground is supplied at all times
- to IPDM E/R terminals 39 and 59
- through body grounds E15 and E24.

If the IPDM E/R receives a starter relay request ON signal from the BCM over the CAN communication lines, the IPDM E/R grounds the starter relay and power is supplied
- through terminal 19 of the IPDM E/R
- to terminal S of the starter motor.

The starter motor magnetic switch energizes closing the circuit between the battery and the starter motor. The starter motor is case ground through the cylinder block. With power and ground supplied, the starter motor operates.

CVT Models

Power is supplied at all times
- to starter motor terminal B, and
- through 40A fusible link (letter **h** , located in the fuse and fusible link box)
- to ignition switch terminal B.

With the ignition switch in the START position, power is supplied
- from ignition switch terminal ST

• to IPDM E/R terminal 21.

With the selector lever in the P or N position, power is supplied

• from the transmission control module (TCM) terminal 24
• to IPDM E/R terminal 35.

Ground is supplied at all times

• to IPDM E/R terminals 39 and 59
• through body grounds E15 and E24.

If the IPDM E/R receives a starter relay request ON signal from the BCM over the CAN network, the IPDM E/R grounds the starter relay and power is supplied

• through terminal 19 of the IPDM E/R
• to terminal S of the starter motor.

The starter motor magnetic switch energizes closing the circuit between the battery and the starter motor. The starter motor is case ground through the cylinder block. With power and ground supplied, the starter motor operates.

Wiring Diagram - START -

INFOID:0000000001704349

M/T Models

SC-START-01

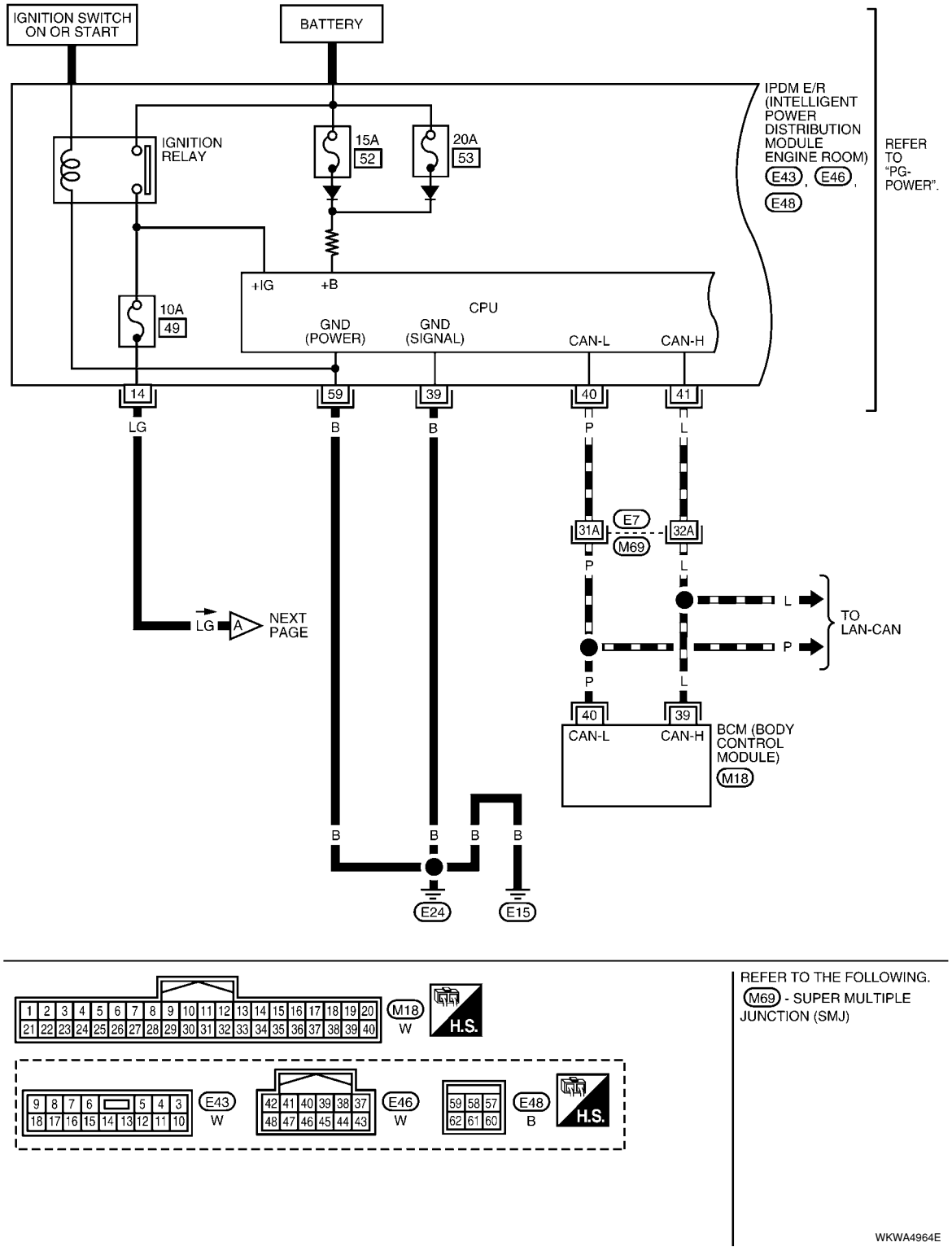

SC-START-02

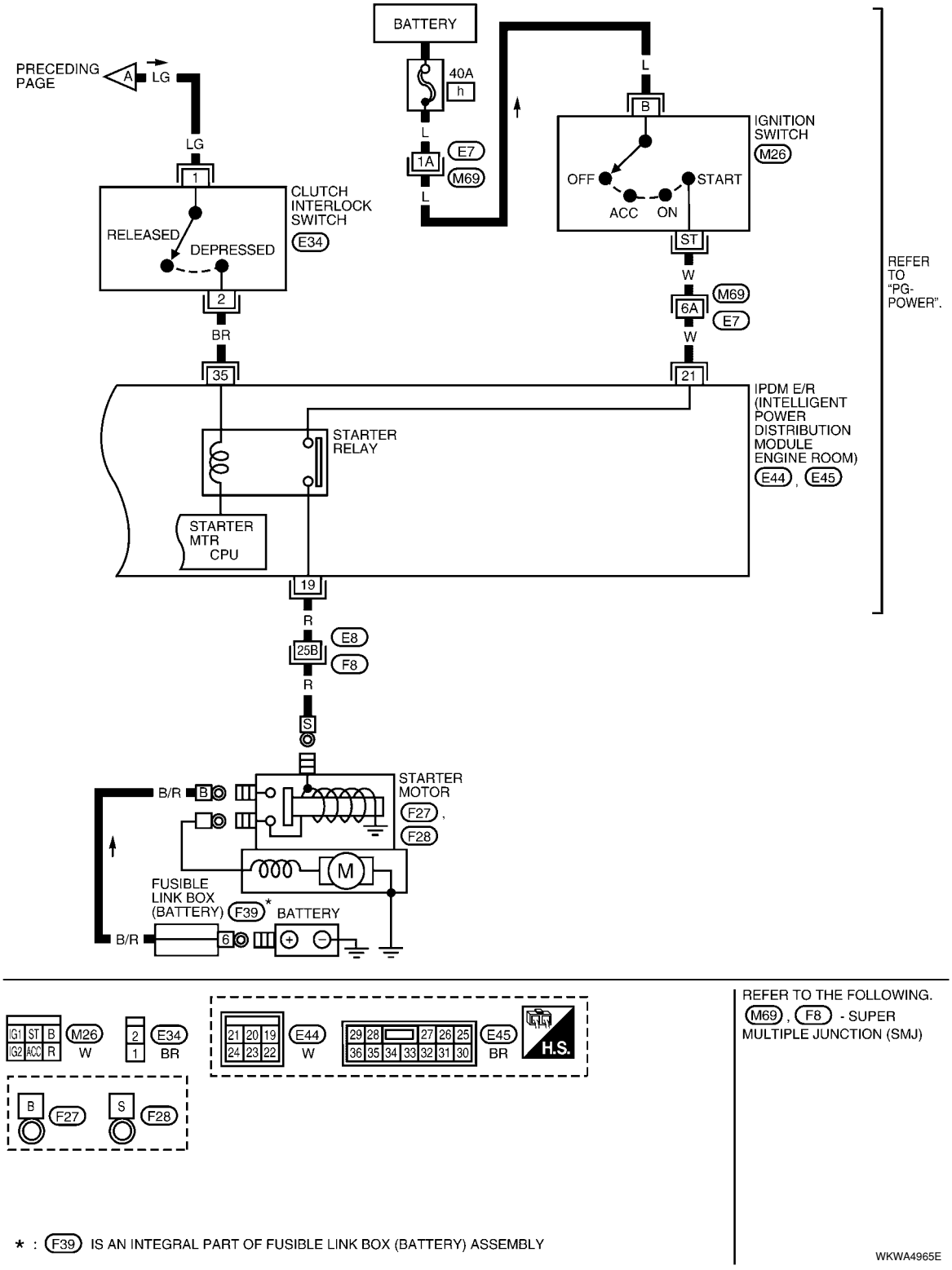
BATTERY
40A
h
L
1A
E7
M69
L
PRECEDING PAGE
A
LG
LG
1
CLUTCH INTERLOCK SWITCH
E34
RELEASED
DEPRESSED
2
BR
35
B
IGNITION SWITCH
M26
OFF
START
ACC
ON
ST
W
M69
6A
E7
W
21
REFER TO "PG-POWER".
IPDM E/R (INTELLIGENT POWER DISTRIBUTION MODULE ENGINE ROOM)
E44 , E45
STARTER RELAY
STARTER MTR CPU
19
R
E8
25B
F8
R
S
B/R
B
STARTER MOTOR
F27 ,
F28
M
FUSIBLE LINK BOX (BATTERY) F39 *
BATTERY
B/R
6
IG1 ST B
IG2 ACC R
M26
W
2
1
E34
BR
21 20 19
24 23 22
E44
W
29 28 27 26 25
36 35 34 33 32 31 30
E45
BR
H.S.
B
F27
S
F28
REFER TO THE FOLLOWING.
M69 , F8 - SUPER MULTIPLE JUNCTION (SMJ)
* : F39 IS AN INTEGRAL PART OF FUSIBLE LINK BOX (BATTERY) ASSEMBLY
WKWA4965E

SC-START-03

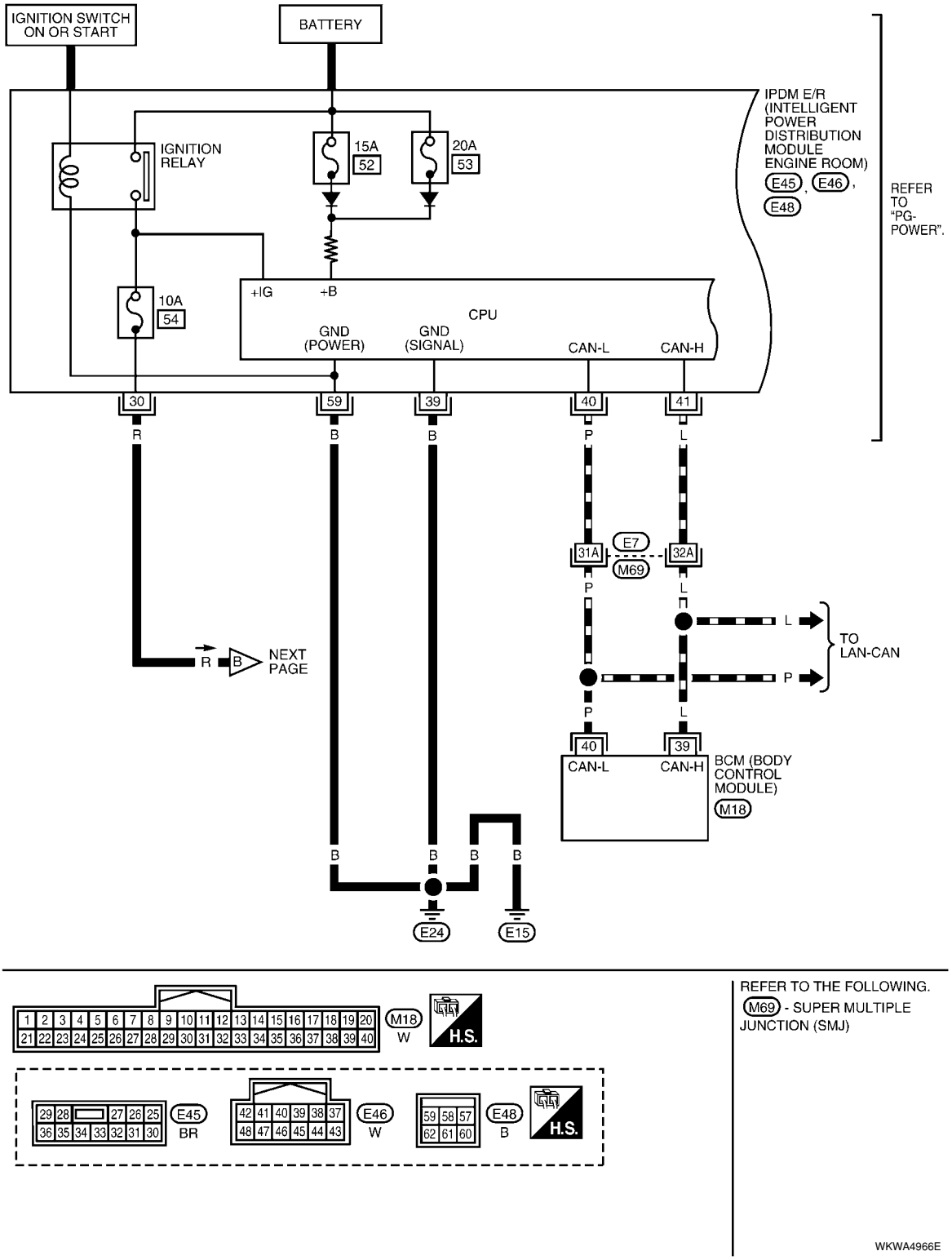
IGNITION SWITCH ON OR START
BATTERY
IPDM E/R (INTELLIGENT POWER DISTRIBUTION MODULE ENGINE ROOM)
E45, E46, E48
REFER TO "PG-POWER".
IGNITION RELAY
15A 52
20A 53
10A 54
+IG
+B
CPU
GND (POWER)
GND (SIGNAL)
CAN-L
CAN-H
30
59
39
40
41
R
B
B
P
L
31A
E7
M69
32A
P
L
L
P
TO LAN-CAN
R
B
NEXT PAGE
P
L
40
39
CAN-L
CAN-H
BCM (BODY CONTROL MODULE)
M18
B
B
B
B
E24
E15
M18
W
H.S.
E45
BR
E46
W
E48
B
H.S.
REFER TO THE FOLLOWING.
M69 - SUPER MULTIPLE JUNCTION (SMJ)
WKWA4966E

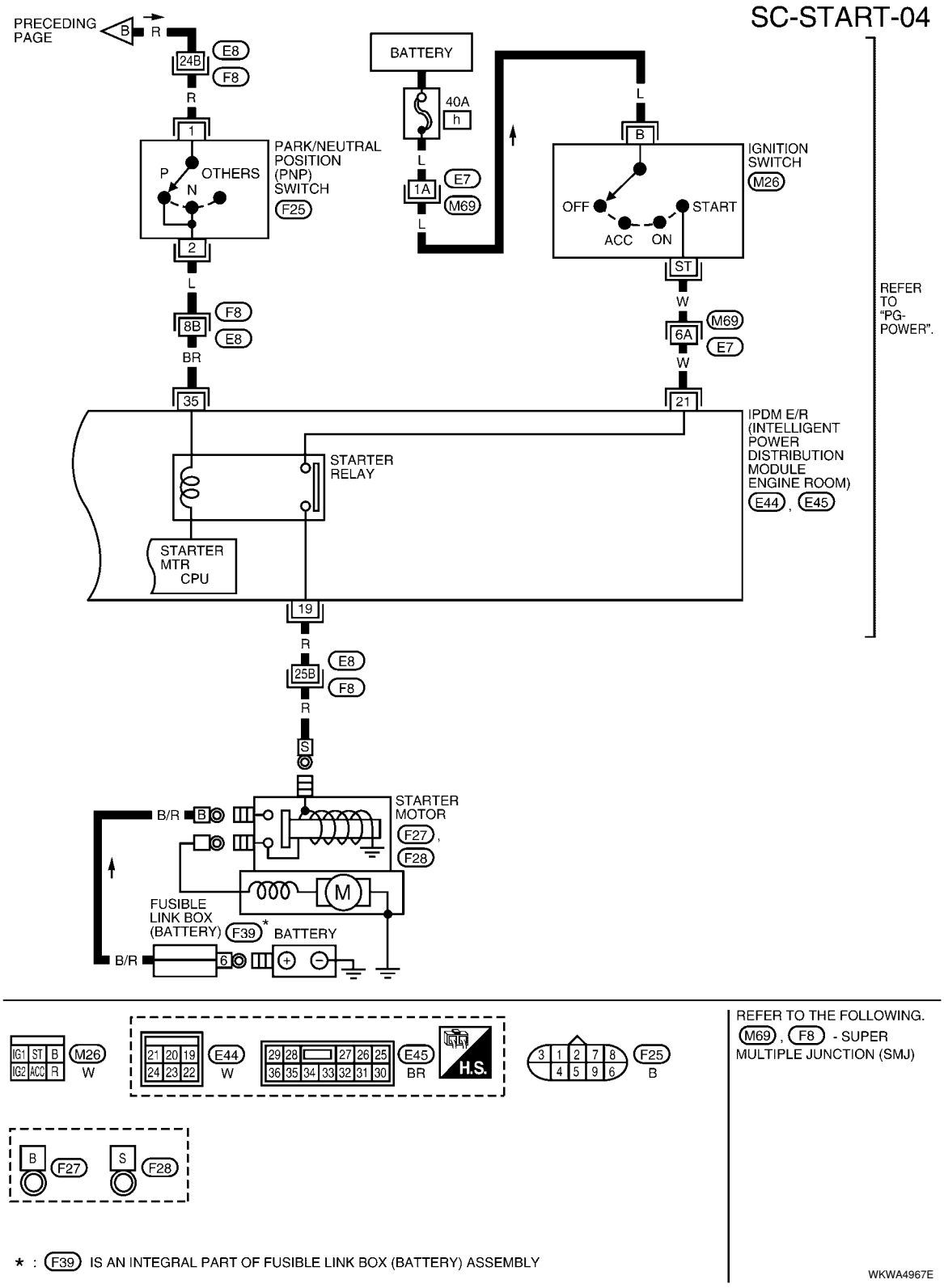
SC-START-04
PRECEDING PAGE
B
R
24B
E8
F8
R
1
PARK/NEUTRAL POSITION (PNP) SWITCH
F25
P
OTHERS
N
2
L
8B
F8
E8
BR
35
BATTERY
40A
h
L
1A
E7
M69
L
B
IGNITION SWITCH
M26
OFF
START
ACC
ON
ST
W
6A
M69
E7
W
21
REFER TO "PG-POWER".
IPDM E/R (INTELLIGENT POWER DISTRIBUTION MODULE ENGINE ROOM)
E44
E45
STARTER RELAY
STARTER MTR CPU
19
R
25B
E8
F8
R
S
STARTER MOTOR
F27
F28
B/R
B
M
FUSIBLE LINK BOX (BATTERY)
F39
*
BATTERY
B/R
6
IG1 ST B
IG2 ACC R
M26
W
21 20 19
24 23 22
E44
W
29 28 27 26 25
36 35 34 33 32 31 30
E45
BR
H.S.
3 1 2 7 8
4 5 9 6
F25
B
B
F27
S
F28
REFER TO THE FOLLOWING.
M69 , F8 - SUPER MULTIPLE JUNCTION (SMJ)
* : F39 IS AN INTEGRAL PART OF FUSIBLE LINK BOX (BATTERY) ASSEMBLY
WKWA4967E

SC-START-05

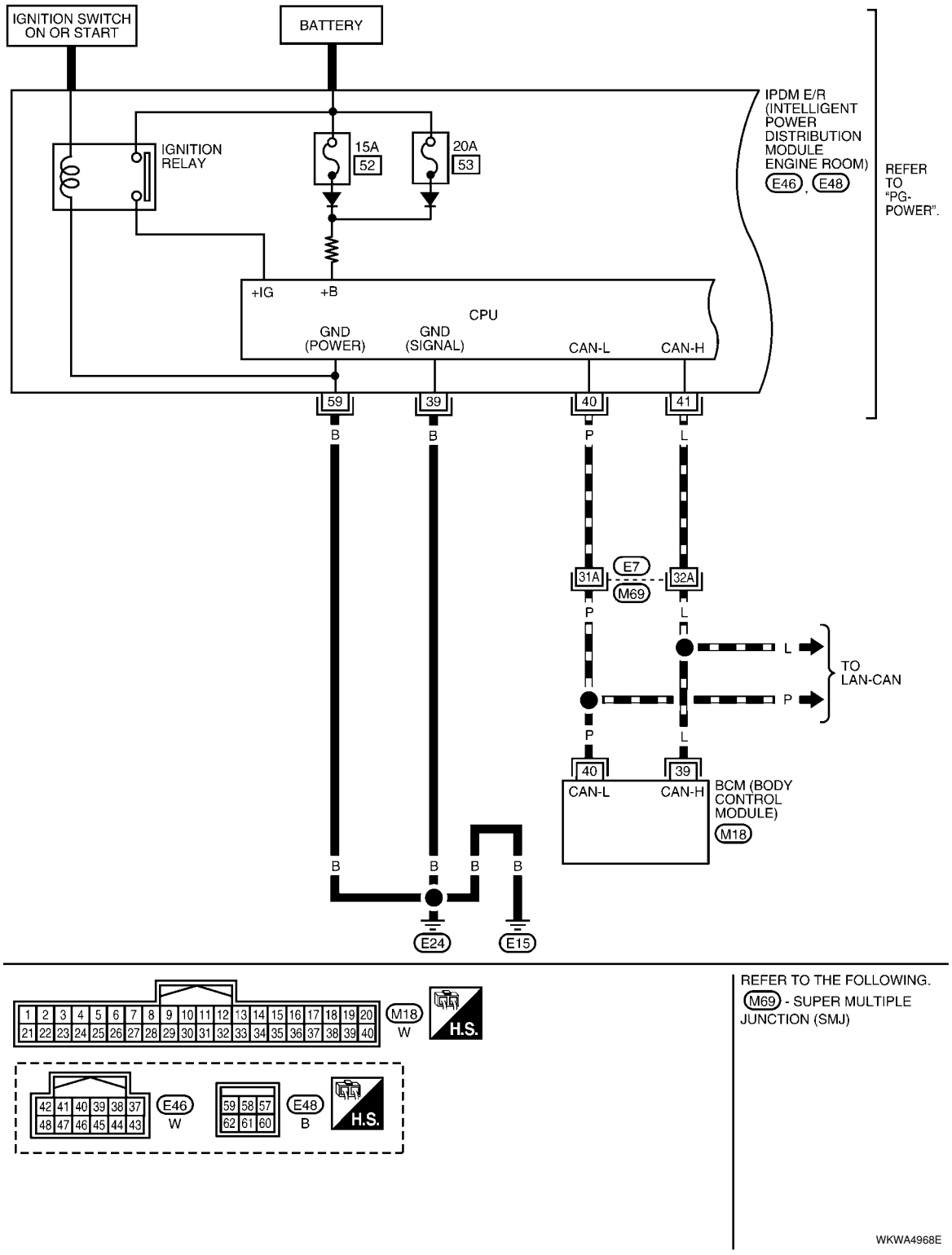
IGNITION SWITCH ON OR START
BATTERY
IPDM E/R (INTELLIGENT POWER DISTRIBUTION MODULE ENGINE ROOM)
E46, E48
REFER TO "PG-POWER".
IGNITION RELAY
15A
52
20A
53
+IG
+B
CPU
GND (POWER)
GND (SIGNAL)
CAN-L
CAN-H
59
39
40
41
B
B
P
L
E7
M69
31A
32A
P
L
L
P
TO LAN-CAN
P
L
40
39
CAN-L
CAN-H
BCM (BODY CONTROL MODULE)
M18
B
B
B
B
E24
E15
M18
W
H.S.
E46
W
E48
B
H.S.
REFER TO THE FOLLOWING.
M69 - SUPER MULTIPLE JUNCTION (SMJ)
WKWA4968E

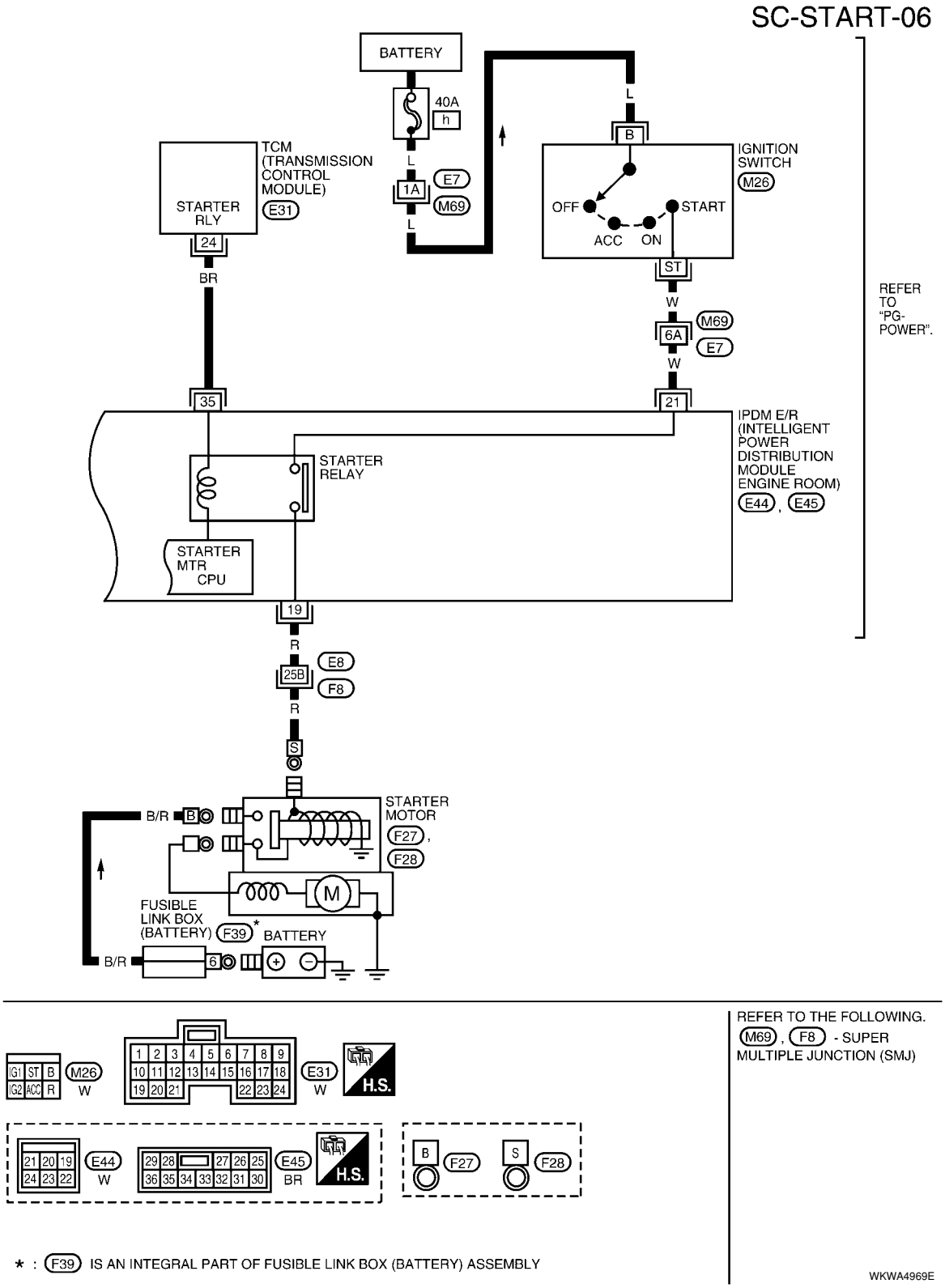

Trouble Diagnosis with Starting/Charging System Tester

INFOID:0000000001704350

For starting system testing, use Starting/Charging System Tester (J-44373). For details and operating instructions, refer to Technical Service Bulletin.

WORK FLOW

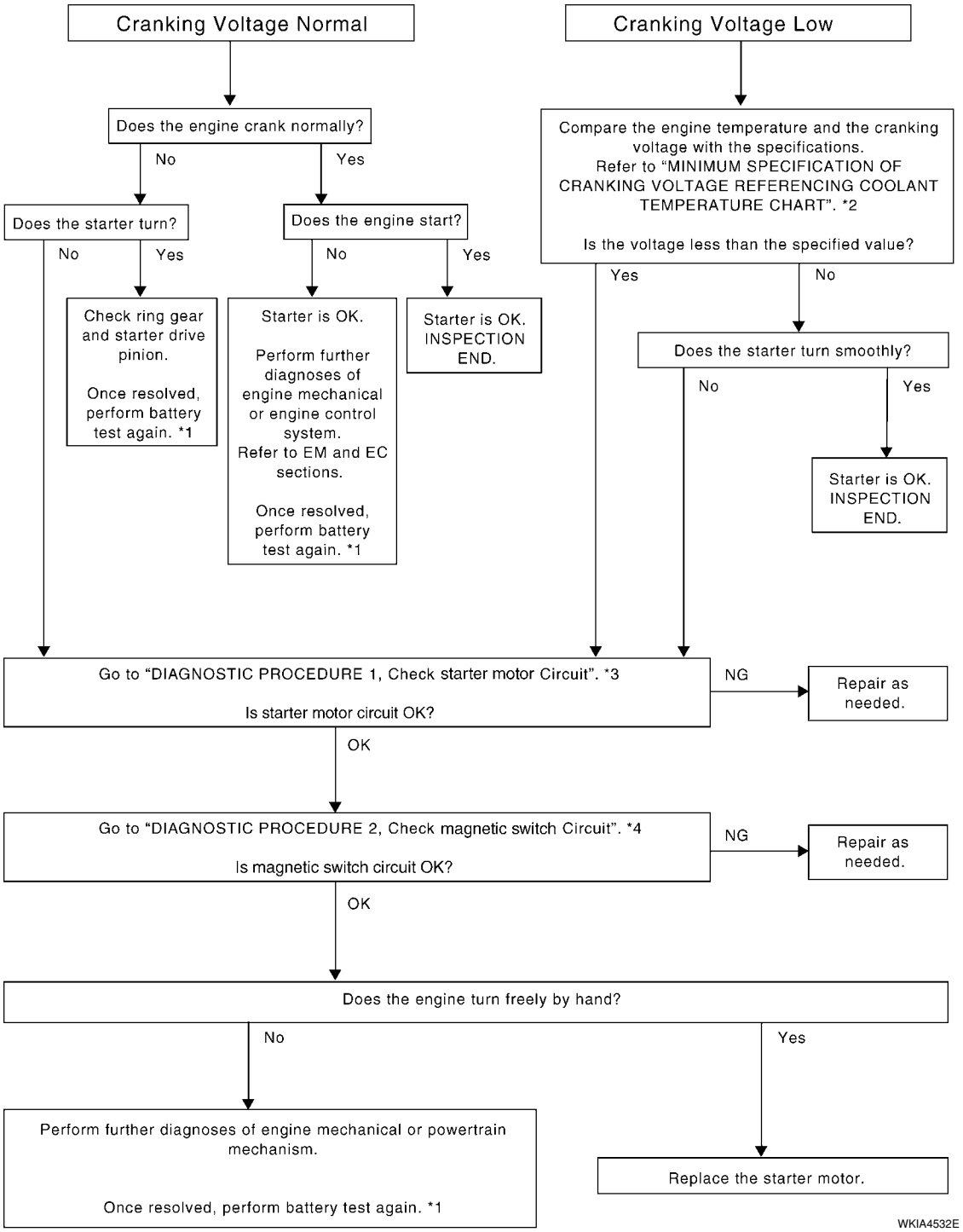

*1 For battery testing, use Battery Service Center (J-48087). For details and operating instructions, refer to Technical Service Bulletin and/or Battery Service Center User Guide.

*2 "MINIMUM SPECIFICATION OF CRANKING VOLTAGE REFERENCING COOLANT TEMPERATURE"

*3 "Check Starter Motor Circuit"

*4 "Check Magnetic Switch Circuit"

DIAGNOSTIC PROCEDURE 1

Check Starter Motor Circuit

1. CHECK POWER SUPPLY TO STARTER MOTOR

1. Remove the fuel pump fuse.
2. Crank or start the engine (where possible) until the fuel pressure is released.
3. Turn the ignition switch OFF.
4. Check that the starter motor connector F27 connection is clean and tight.
5. Check voltage between starter motor connector F27 terminal B and ground using a digital circuit tester.

Battery voltage should exist

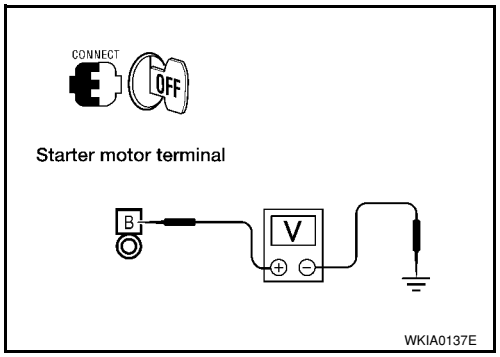

OK or NG

OK >> GO TO 2.
NG >> Check harness between the battery and the starter motor for open circuit.

2. CHECK VOLTAGE DROP ON STARTER MOTOR CIRCUIT

1. Check voltage between starter motor connector F27 terminal B and battery positive terminal using a digital circuit tester.

Ignition switch in START : Less than 0.2V

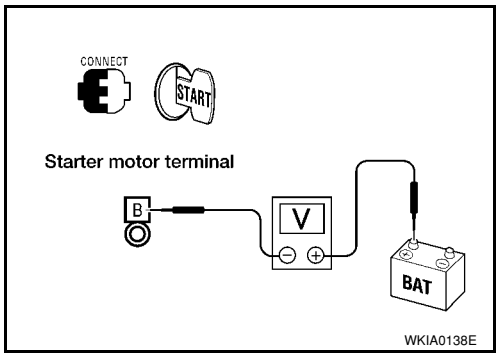

OK or NG

OK >> GO TO 3.
NG >> Check harness between the battery and the starter motor for poor continuity.

3. CHECK VOLTAGE DROP ON STARTER MOTOR GROUND CIRCUIT

1. Check voltage between starter motor case and battery negative terminal using a digital circuit tester.

Ignition switch in START : Less than 0.2V

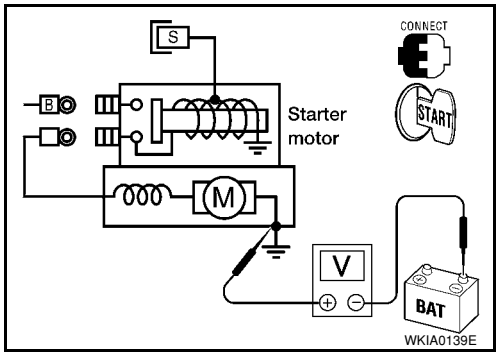

OK or NG

OK >> Starter motor ground circuit is OK. Further inspection is necessary. Refer to "WORK FLOW" .
NG >> Check harness between the starter motor case and ground for poor continuity.

DIAGNOSTIC PROCEDURE 2

Check Magnetic Switch Circuit

1. CHECK POWER SUPPLY TO MAGNETIC SWITCH

1. Remove the fuel pump fuse.
2. Crank or start the engine (where possible) until the fuel pressure is released.
3. Turn the ignition switch OFF.
4. Disconnect starter motor connector F28.

5. Check voltage between starter motor connector F28 terminal S and ground using a digital circuit tester.

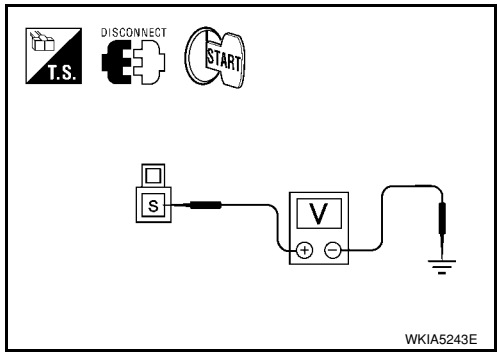

Ignition switch in START : Battery voltage

OK or NG

OK >> GO TO 2.

NG >> Check the following:
- 40A fusible link (letter **h** , located in fuse and fusible link box)
- 10A fuse (No. 49, M/T models, located in the IPDM E/R)
- 15A fuse (No. 52, located in the IPDM E/R)
- 20A fuse (No. 53, located in the IPDM E/R)
- PNP switch, clutch interlock switch or TCM depending on equipment
- Ignition switch
- Ignition relay IPDM E/R
- Starter relay IPDM E/R
- Starter relay request ON signal from BCM
- Harness for open or short circuit

2. CHECK VOLTAGE DROP ON MAGNETIC SWITCH CIRCUIT

1. Connect starter motor connector F28.
2. Check voltage between starter motor connector F28 terminal S and battery positive terminal using a digital circuit tester.

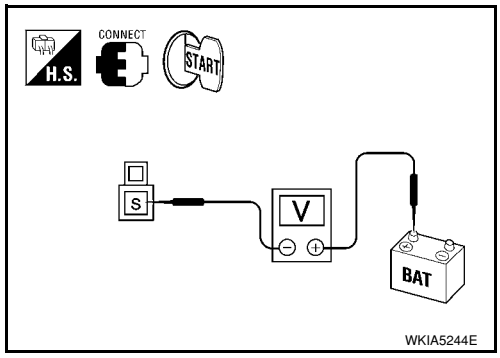

Ignition switch in START : Less than 1V

OK or NG

OK >> Magnetic switch circuit is OK. Further inspection is necessary. Refer to "WORK FLOW" .

NG >> Check harness, components and connections between the battery and the magnetic switch for poor continuity.

MINIMUM SPECIFICATION OF CRANKING VOLTAGE REFERENCING COOLANT TEMPERATURE

Engine coolant temperature	Voltage V
–30°C to –20°C (–22°F to –4°F)	8.4
–19°C to –10°C (–2°F to 14°F)	8.9
–9°C to 0°C (16°F to 32°F)	9.3
More than 1°C (More than 34°F)	9.7

Removal and Installation

INFOID:0000000001704351

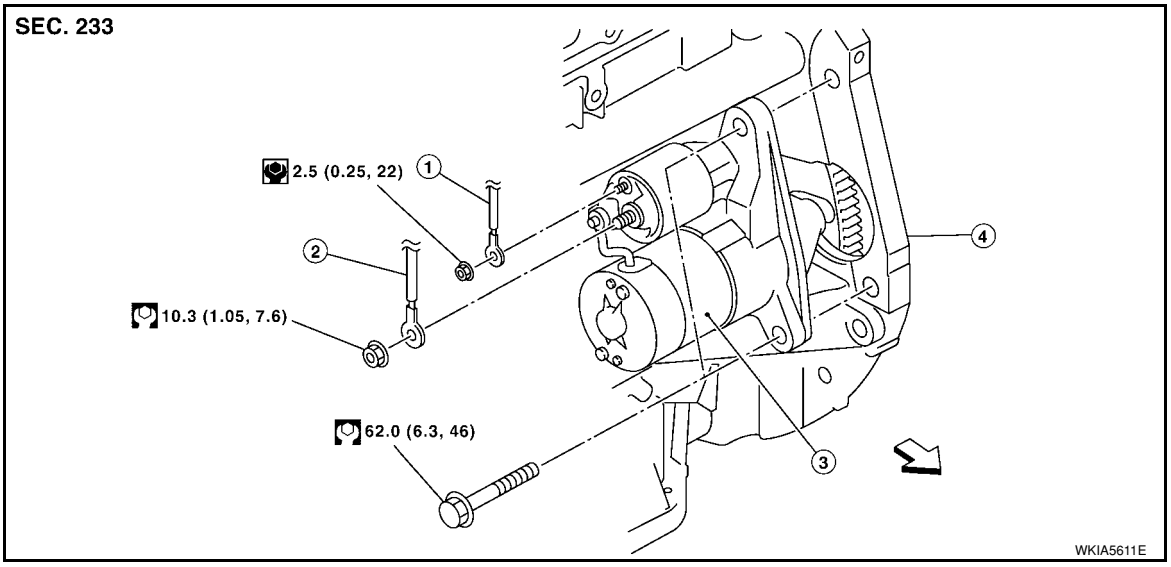

1. "S" terminal harness
2. "B" terminal harness
3. Starter motor
4. Cylinder block

⇦ Engine front

REMOVAL

1. Disconnect the battery negative terminal.
2. Remove air duct (inlet). Refer to EM-16 .
3. Remove reservoir tank. Refer to CO-11 .
4. Remove “S” terminal nut.
5. Remove “B” terminal nut.
6. Remove starter motor bolts.
7. Remove starter motor.

INSTALLATION

Installation is in the reverse order of removal.

CAUTION:

Be sure to tighten “B” terminal nut carefully.

CHARGING SYSTEM

System Description

INFOID:0000000001704352

The generator provides DC voltage to operate the vehicle's electrical system and to keep the battery charged. The voltage output is controlled by the IC regulator.
Power is supplied at all times to generator terminal 3 through
- 10A fuse (No. 29, located in the fuse and fusible link box).

Power is supplied through terminal 1 to charge the battery and operate the vehicle's electrical system. Output voltage is monitored at terminal 3 by the IC regulator. The charging circuit is protected by the 120A fusible link [letter **a** , located in the fusible link box (battery)].
Ground is supplied
- to generator terminal 5
- through body ground F5, and
- through the generator case to the cylinder block

With the ignition switch in the ON or START position, power is supplied
- through 10A fuse [No. 3, located in the fuse block (J/B)]
- to combination meter terminal 28 for the charge warning lamp.

The IC regulator controls ground to terminal 38 of the combination meter through terminal 2 of the generator. When the ignition is turned on and power becomes available at terminal 2, this "wakes up" the regulator. The regulator monitors charge output and grounds terminal 2 or leaves it open depending on charge output. With power and ground supplied, the charge warning lamp will illuminate. When the generator is providing sufficient voltage, the ground is opened and the charge warning lamp will go off.
If the charge warning lamp illuminates with the engine running, a malfunction is indicated.

Wiring Diagram - CHARGE -

INFOID:0000000001704353

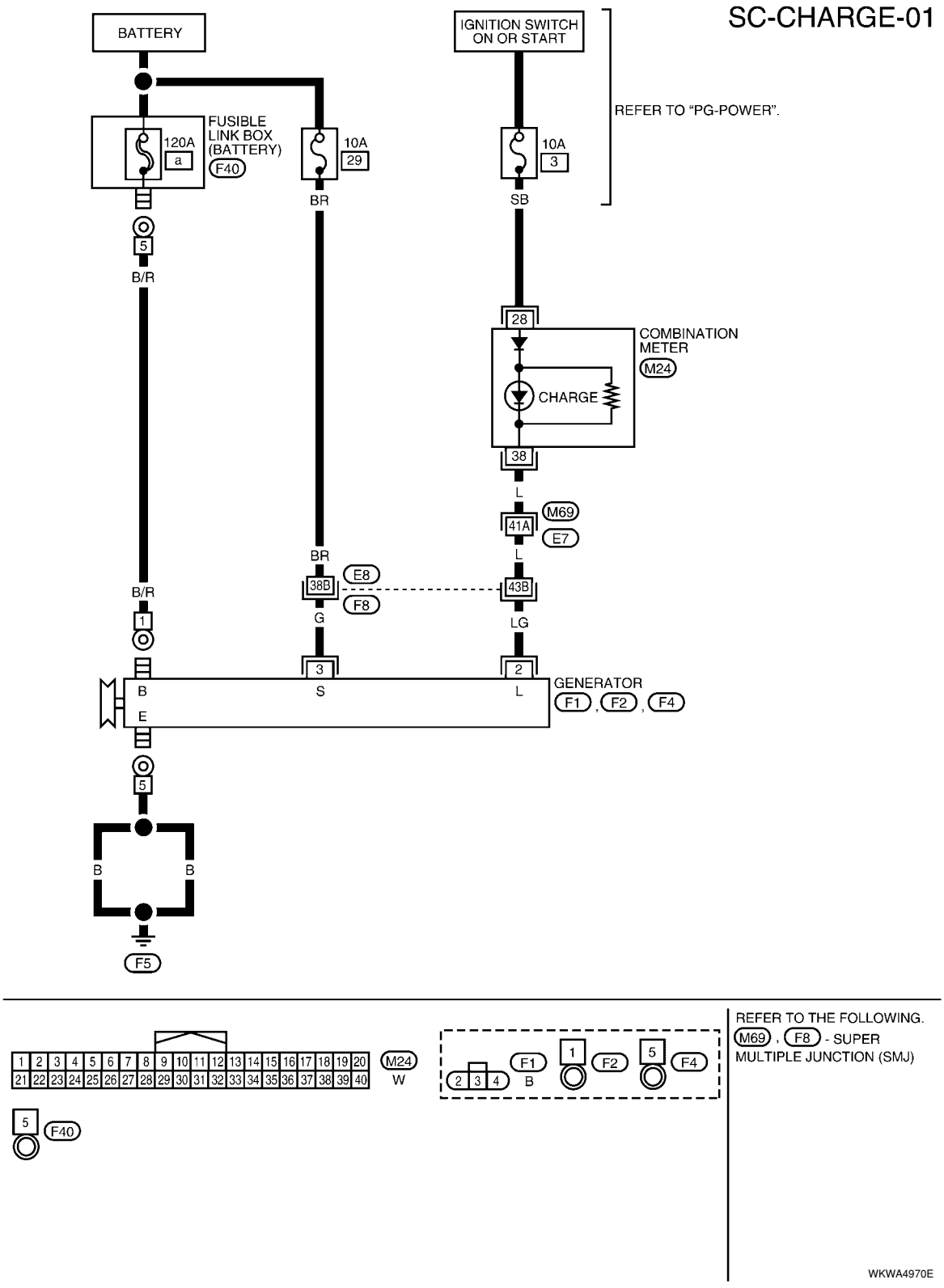

Trouble Diagnosis with Starting/Charging System Tester

INFOID:0000000001704354

For charging system testing, use Starting/Charging System Tester (J-44373). For details, refer to Technical Service Bulletin.

WORK FLOW

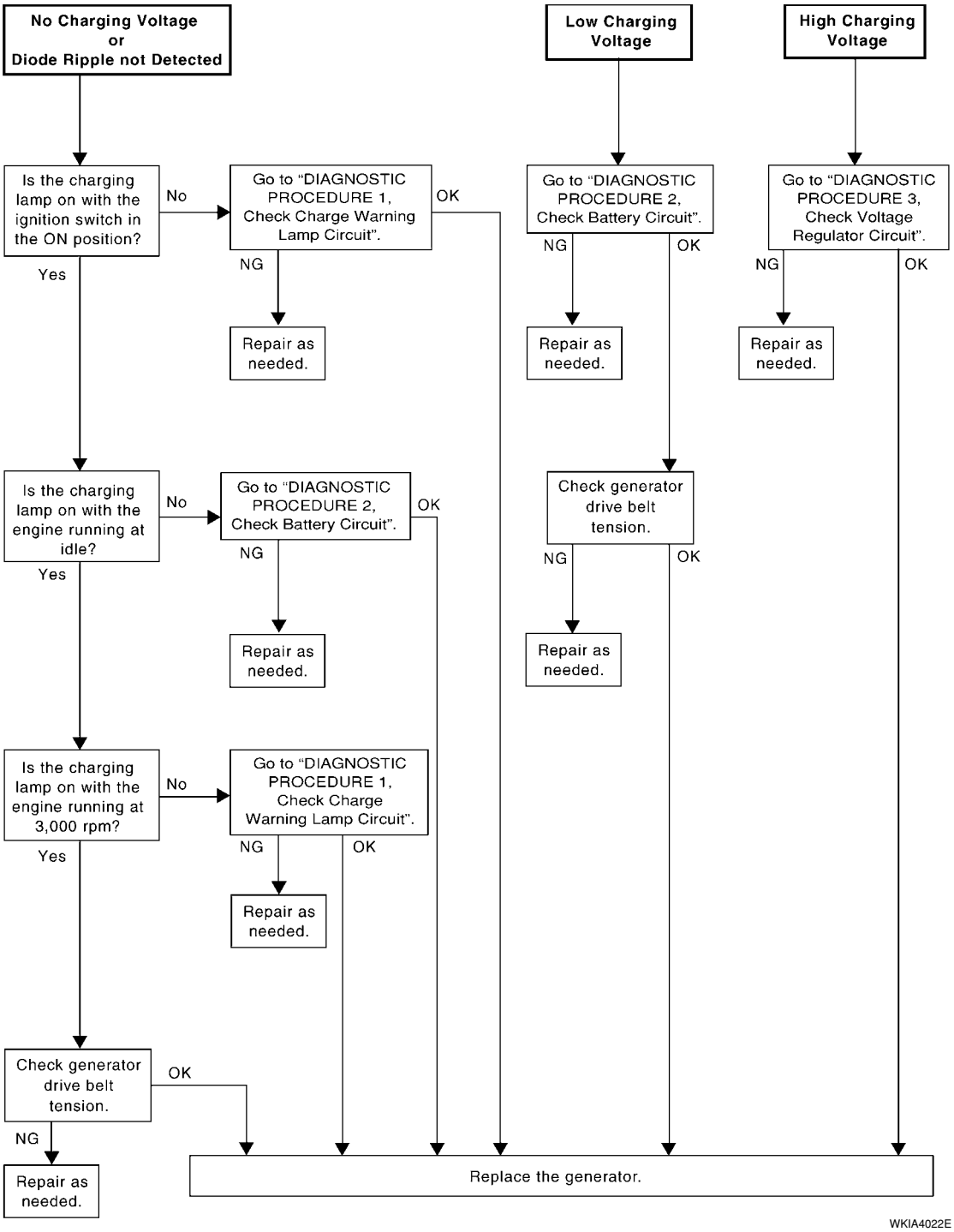

DIAGNOSTIC PROCEDURE 1

Check Charge Warning Lamp Circuit

1. CHECK CHARGE WARNING LAMP CIRCUIT CONNECTION

Check to see if terminal 2 is clean and tight.

OK or NG

OK >> GO TO 2.

NG >> Repair terminal 2 connection. Confirm repair by performing complete Starting/Charging system test. Refer to Technical Service Bulletin.

2. CHECK CHARGE WARNING LAMP CIRCUIT

1. Disconnect generator connector F1.
2. Apply ground to generator connector F1 terminal 2 with the ignition switch in the ON position.

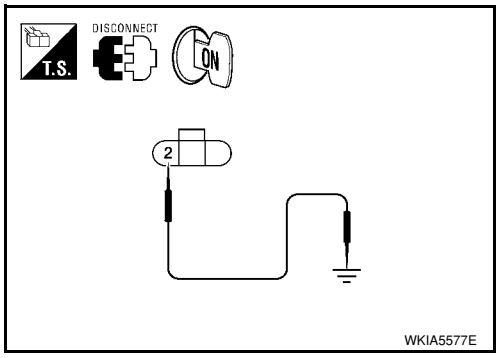

CHARGE lamp should light up.

OK or NG

OK >> GO TO "WORK FLOW" .
NG >> Check the following.
- 10A fuse [No. 3, located in fuse block (J/B)]
- CHARGE lamp
- Harness for open or short between combination meter and fuse
- Harness for open or short between combination meter and generator

DIAGNOSTIC PROCEDURE 2

Check Battery Circuit

1. CHECK BATTERY CIRCUIT CONNECTION

Check to see if terminal 1 is clean and tight.

OK or NG

OK >> GO TO 2.
NG >> Repair terminal 1 connection. Confirm repair by performing complete Starting/Charging system test. Refer to Technical Service Bulletin.

2. CHECK BATTERY CIRCUIT

Check voltage between generator connector F2 terminal 1 and ground using a digital circuit tester.

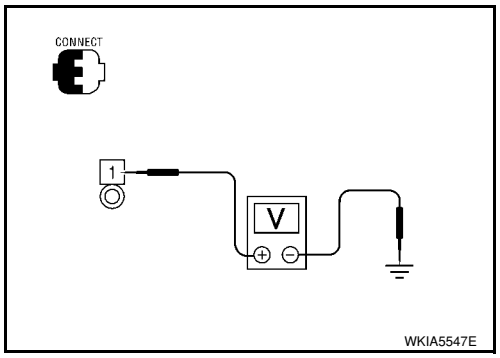

Battery voltage should exist.

OK or NG

OK >> GO TO 3.
NG >> Check the following.
- 120A fusible link [letter **a** , located in fusible link box (battery)]
- Harness for open or short between generator and fusible link

3. CHECK VOLTAGE DROP ON BATTERY CIRCUIT

Check voltage between generator connector F2 terminal 1 and battery positive terminal using a digital circuit tester.

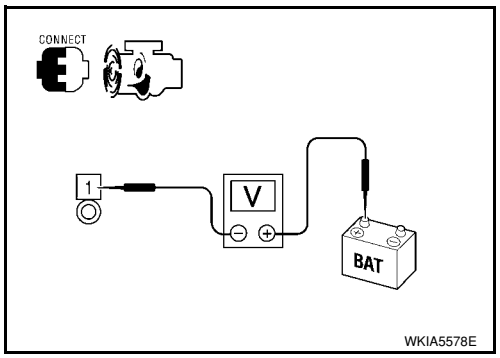

With engine running at idle and warm : Less than 0.2V

OK or NG

OK >> Replace the generator. Refer to SC-24, "Removal and Installation" . Confirm repair by performing complete Starting/Charging system test. Refer to Technical Service Bulletin.
NG >> Check harness between the battery and the generator for poor continuity.

DIAGNOSTIC PROCEDURE 3

Check Voltage Regulator Circuit

1. CHECK VOLTAGE REGULATOR CIRCUIT CONNECTION

Check to see if terminal 3 is clean and tight.

OK or NG

OK >> GO TO 2.
NG >> Repair terminal 3 connection. Confirm repair by performing complete Starting/Charging system test. Refer to Technical Service Bulletin.

2. CHECK VOLTAGE REGULATOR CIRCUIT

Check voltage between generator connector F1 terminal 3 and ground using a digital circuit tester.

Battery voltage should exist.

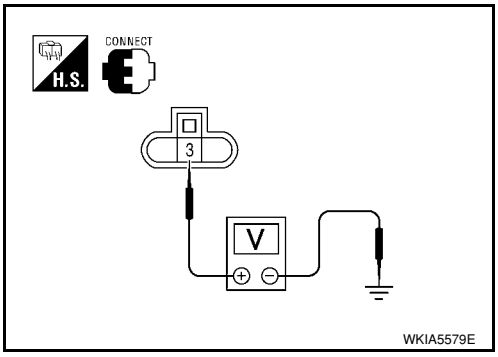

OK or NG

OK >> GO TO 3.
NG >> Check the following.
- 10A fuse (No. 29, located in fuse and fusible link box)
- Harness for open or short between generator and fuse

3. CHECK VOLTAGE DROP ON VOLTAGE REGULATOR CIRCUIT

Check voltage between generator connector F1 terminal 3 and battery positive terminal using a digital circuit tester.

With engine running at idle and warm : Less than 0.2V

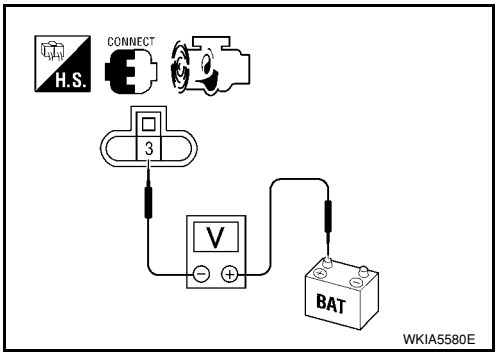

OK or NG

OK >> Replace the generator. Refer to SC-24, "Removal and Installation" . Confirm repair by performing complete Starting/Charging system test. Refer to Technical Service Bulletin.
NG >> Check harness between the battery and the generator for poor continuity.

Removal and Installation

INFOID:0000000001704355

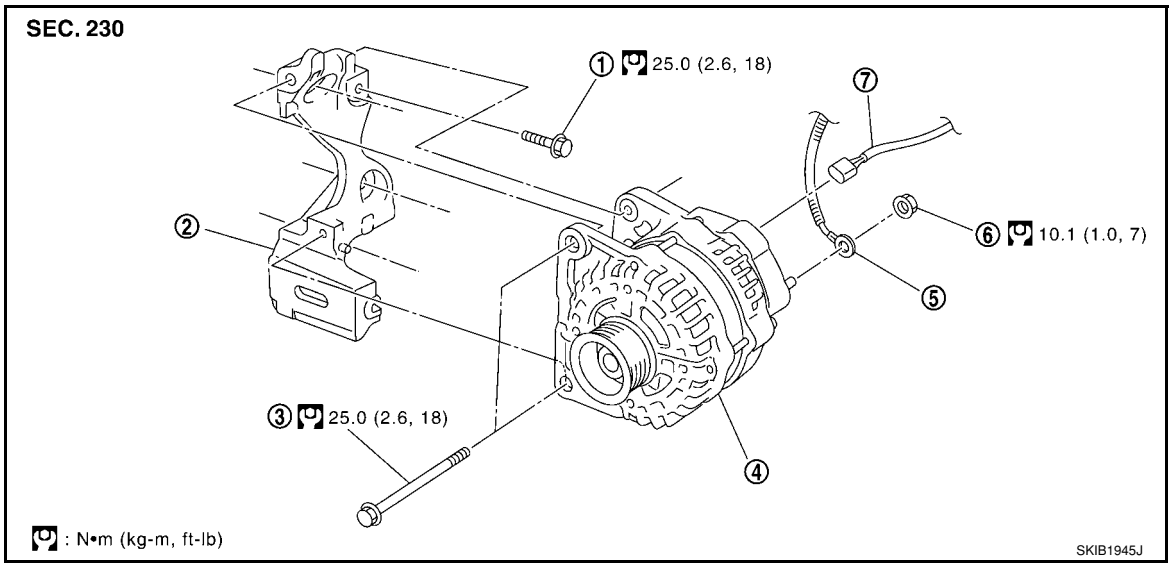

1. Generator bracket bolt
2. Generator bracket
3. Generator bolt
4. Generator
5. Generator "B" terminal harness
6. "B" terminal nut
7. Generator connector

REMOVAL

1. Disconnect the battery cable from the negative terminal.
2. Remove drive belt. Refer to EM-13, "Component".
3. Disconnect generator connector.
4. Remove “B” terminal nut.
5. Remove generator bolts.
6. Remove generator assembly from the vehicle.

GENERATOR PULLEY INSPECTION

- Check that the generator pulley does not rattle.
- Check that the generator pulley nut is properly tightened.

Generator pulley nut : 118 N·m (12.0 kg-m, 87 ft-lb)

INSTALLATION

Installation is in the reverse order of removal.

CAUTION:

Be sure to tighten “B” terminal nut carefully.

SERVICE DATA AND SPECIFICATIONS (SDS)

Battery

INFOID:0000000001704356

	M/T, A/T	CVT
Type	TR4	Gr.51 R
20 hours rate capacity	12 V - 47 AH	12 V - 47 AH
Cold Cranking Amps. (CCA)	470	470

Starter

INFOID:0000000001704357

Type		S114 - 901
		HITACHI make
		Reduction gear type
System voltage		12 V
No-load	Terminal voltage	11 V
	Current	Less than 110 A
	Revolution	More than 3,000 rpm
Minimum diameter of commutator		28.0 mm (1.102 in)
Minimum length of brush		10.5 mm (0.413 in)
Brush spring tension		16.2 N (1.65 kg, 3.64 lb)
Clearance between bearing metal and armature shaft		Less than 0.2 mm (0.008 in)
Movement “L” in height of pinion assembly		0.3 - 2.5 mm (0.012 - 0.098 in)

Generator

INFOID:0000000001704358

Type	LR1140 - 803
	MITSUBISHI make
Nominal rating	12 V - 140 A
Ground polarity	Negative
Minimum revolution under no-load (when 13.5 V is applied)	Less than 1,200 rpm
Hot output current (when 13.5 V is applied)	More than 27 A/1,300 rpm More than 95 A/2,500 rpm More than 116 A/5,000 rpm
Regulated output voltage	14.1 - 14.7 V
Minimum length of brush	More than 6.00 mm (0.236 in)
Brush spring pressure	1.1 - 3.7 N (112 - 378 g, 4.00 - 13.3 oz)
Slip ring minimum outer diameter	More than 14.7 mm (0.579 in)
Rotor (field coil) resistance	1.61 - 1.91 Ω

SECTION SE
SEAT

CONTENTS

SERVICE INFORMATION 2

PRECAUTIONS 2
Precaution for Supplemental Restraint System (SRS) "AIR BAG" and "SEAT BELT PRE-TENSIONER" 2
Service Notice 2
Precaution 2

PREPARATION 3
Special Service Tool 3
Commercial Service Tool 3

SQUEAK AND RATTLE TROUBLE DIAGNOSES 4
Work Flow 4
Generic Squeak and Rattle Troubleshooting 6
Diagnostic Worksheet 8

FRONT SEAT 10
Driver Seat 10
Passenger Seat 11
Removal and Installation 11
Disassembly and Assembly 12

REAR SEAT 14
Component Parts Drawing 14
Removal and Installation 15
Disassembly and Assembly 17
Component Parts Drawing 20
Removal and Installation 21
Disassembly and Assembly 23
Removal and Installation 25
Disassembly and Assembly 25

SERVICE INFORMATION

PRECAUTIONS

Precaution for Supplemental Restraint System (SRS) "AIR BAG" and "SEAT BELT PRE-TENSIONER"

INFOID:0000000001704254

The Supplemental Restraint System such as “AIR BAG” and “SEAT BELT PRE-TENSIONER”, used along with a front seat belt, helps to reduce the risk or severity of injury to the driver and front passenger for certain types of collision. Information necessary to service the system safely is included in the SR and SB section of this Service Manual.

WARNING:

- **To avoid rendering the SRS inoperative, which could increase the risk of personal injury or death in the event of a collision which would result in air bag inflation, all maintenance must be performed by an authorized NISSAN/INFINITI dealer.**
- **Improper maintenance, including incorrect removal and installation of the SRS, can lead to personal injury caused by unintentional activation of the system. For removal of Spiral Cable and Air Bag Module, see the SR section.**
- **Do not use electrical test equipment on any circuit related to the SRS unless instructed to in this Service Manual. SRS wiring harnesses can be identified by yellow and/or orange harnesses or harness connectors.**

Service Notice

INFOID:0000000001704255

- When removing or installing various parts, place a cloth or padding onto the vehicle body to prevent scratches.
- Handle trim, molding instruments, grille, etc. carefully during removing or installing. Be careful not to oil or damage them.
- Apply sealing compound where necessary when installing parts.
- When applying sealing compound, be careful that the sealing compound does not protrude from parts.
- When replacing any metal parts (for example body outer panel, member, etc.), be sure to take rust prevention measures.

Precaution

INFOID:0000000001704256

- When removing or disassembling any part, be careful not to damage or deform it. Protect parts which may get in the way with cloth.
- When removing parts with a screwdriver or other tool, protect parts by wrapping tools with vinyl or tape.
- Keep removed parts protected with cloth.
- If a clip is deformed or damaged, replace it.
- If an unreusable part is removed, replace it with a new one.
- Tighten bolts and nuts firmly to the specified torque.
- After re-assembly has been completed, make sure each part functions correctly.
- Remove stains in the following way.

Water-soluble stains:
Dip a soft cloth in warm water, and then squeeze it tightly. After wiping the stain, wipe with a soft dry cloth.
Oil stain:
Dissolve a synthetic detergent in warm water (density of 2 to 3% or less), dip the cloth, then clean off the stain with the cloth. Next, dip the cloth in fresh water and squeeze it tightly. Then clean off the detergent completely. Then wipe the area with a soft dry cloth.

- Do not use any organic solvent, such as thinner or benzine.

PREPARATION

Special Service Tool

INFOID:0000000001704257

The actual shapes of Kent-Moore tools may differ from those of special service tools illustrated here.

Tool number (Kent-Moore No.) Tool name	Description
— (J-39570) Chassis ear 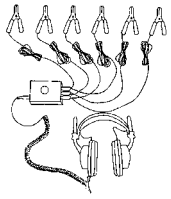 SIIA0993E	Locating the noise
— (J-43980) NISSAN Squeak and Rattle Kit 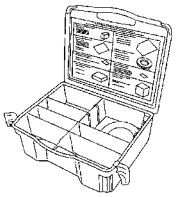 SIIA0994E	Repairing the cause of noise

Commercial Service Tool

INFOID:0000000001704258

(Kent-Moore No.) Tool name	Description
(J-39565) Engine ear 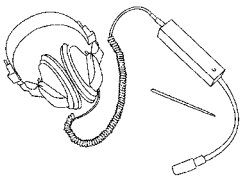 SIIA0995E	Locating the noise

SQUEAK AND RATTLE TROUBLE DIAGNOSES

Work Flow

INFOID:0000000001704259

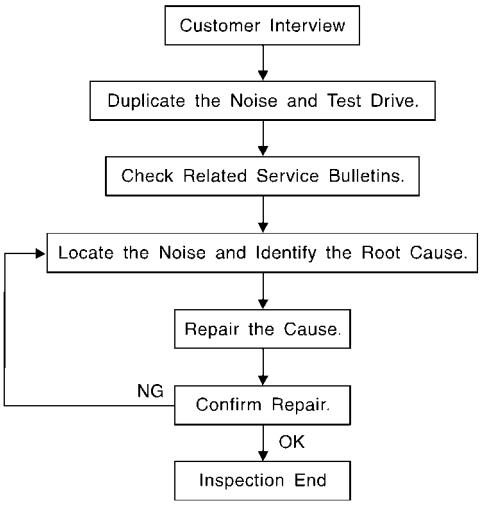

SBT842

CUSTOMER INTERVIEW

Interview the customer if possible, to determine the conditions that exist when the noise occurs. Use the Diagnostic Worksheet during the interview to document the facts and conditions when the noise occurs and any customer's comments; refer to SE-8, "Diagnostic Worksheet" . This information is necessary to duplicate the conditions that exist when the noise occurs.

- The customer may not be able to provide a detailed description or the location of the noise. Attempt to obtain all the facts and conditions that exist when the noise occurs (or does not occur).
- If there is more than one noise in the vehicle, be sure to diagnose and repair the noise that the customer is concerned about. This can be accomplished by test driving the vehicle with the customer.
- After identifying the type of noise, isolate the noise in terms of its characteristics. The noise characteristics are provided so the customer, service adviser and technician are all speaking the same language when defining the noise.
- Squeak —(Like tennis shoes on a clean floor)
  Squeak characteristics include the light contact/fast movement/brought on by road conditions/hard surfaces = higher pitch noise/softer surfaces = lower pitch noises/edge to surface = chirping.
- Creak—(Like walking on an old wooden floor)
  Creak characteristics include firm contact/slow movement/twisting with a rotational movement/pitch dependent on materials/often brought on by activity.
- Rattle—(Like shaking a baby rattle)
  Rattle characteristics include the fast repeated contact/vibration or similar movement/loose parts/missing clip or fastener/incorrect clearance.
- Knock —(Like a knock on a door)
  Knock characteristics include hollow sounding/sometimes repeating/often brought on by driver action.
- Tick—(Like a clock second hand)
  Tick characteristics include gentle contacting of light materials/loose components/can be caused by driver action or road conditions.
- Thump—(Heavy, muffled knock noise)
  Thump characteristics include softer knock/dead sound often brought on by activity.
- Buzz—(Like a bumble bee)
  Buzz characteristics include high frequency rattle/firm contact.
- Often the degree of acceptable noise level will vary depending upon the person. A noise that you may judge as acceptable may be very irritating to the customer.
- Weather conditions, especially humidity and temperature, may have a great effect on noise level.

DUPLICATE THE NOISE AND TEST DRIVE

If possible, drive the vehicle with the customer until the noise is duplicated. Note any additional information on the Diagnostic Worksheet regarding the conditions or location of the noise. This information can be used to duplicate the same conditions when you confirm the repair.

If the noise can be duplicated easily during the test drive, to help identify the source of the noise, try to duplicate the noise with the vehicle stopped by doing one or all of the following:
1) Close a door.
2) Tap or push/pull around the area where the noise appears to be coming from.
3) Rev the engine.
4) Use a floor jack to recreate vehicle “twist”.
5) At idle, apply engine load (electrical load, half-clutch on M/T model, drive position on A/T model).
6) Raise the vehicle on a hoist and hit a tire with a rubber hammer.

- Drive the vehicle and attempt to duplicate the conditions the customer states exist when the noise occurs.
- If it is difficult to duplicate the noise, drive the vehicle slowly on an undulating or rough road to stress the vehicle body.

CHECK RELATED SERVICE BULLETINS

After verifying the customer concern or symptom, check ASIST for Technical Service Bulletins (TSBs) related to that concern or symptom.
If a TSB relates to the symptom, follow the procedure to repair the noise.

LOCATE THE NOISE AND IDENTIFY THE ROOT CAUSE

1. Narrow down the noise to a general area.To help pinpoint the source of the noise, use a listening tool (Chassis Ear: J-39570, Engine Ear: J-39565 and mechanic's stethoscope).
2. Narrow down the noise to a more specific area and identify the cause of the noise by:

- removing the components in the area that you suspect the noise is coming from.
  Do not use too much force when removing clips and fasteners, otherwise clips and fasteners can be broken or lost during the repair, resulting in the creation of new noise.
- tapping or pushing/pulling the component that you suspect is causing the noise.
  Do not tap or push/pull the component with excessive force, otherwise the noise will be eliminated only temporarily.
- feeling for a vibration with your hand by touching the component(s) that you suspect is (are) causing the noise.
- placing a piece of paper between components that you suspect are causing the noise.
- looking for loose components and contact marks.
  Refer to SE-6, "Generic Squeak and Rattle Troubleshooting" .

REPAIR THE CAUSE

- If the cause is a loose component, tighten the component securely.
- If the cause is insufficient clearance between components:
- separate components by repositioning or loosening and retightening the component, if possible.
- insulate components with a suitable insulator such as urethane pads, foam blocks, felt cloth tape or urethane tape. A NISSAN Squeak and Rattle Kit (J-43980) is available through your authorized NISSAN Parts Department.

CAUTION:
Do not use excessive force as many components are constructed of plastic and may be damaged.
Always check with the Parts Department for the latest parts information.
The following materials are contained in the NISSAN Squeak and Rattle Kit (J-43980). Each item can be ordered separately as needed.
URETHANE PADS [1.5 mm (0.059 in) thick]
Insulates connectors, harness, etc.
76268-9E005: 100×135 mm (3.94×5.31 in)/76884-71L01: 60×85 mm (2.36×3.35 in)/76884-71L02: 15×25 mm (0.59×0.98 in)
INSULATOR (Foam blocks)
Insulates components from contact. Can be used to fill space behind a panel.
73982-9E000: 45 mm (1.77 in) thick, 50×50 mm (1.97×1.97 in)/73982-50Y00: 10 mm (0.39 in) thick, 50×50 mm (1.97×1.97 in)
INSULATOR (Light foam block)
80845-71L00: 30 mm (1.18 in) thick, 30×50 mm (1.18×1.97 in)
FELT CLOTH TAPE
Used to insulate where movement does not occur. Ideal for instrument panel applications.
68370-4B000: 15×25 mm (0.59×0.98 in) pad/68239-13E00: 5 mm (0.20 in) wide tape roll. The following materials not found in the kit can also be used to repair squeaks and rattles.
UHMW (TEFLON) TAPE
Insulates where slight movement is present. Ideal for instrument panel applications.

SILICONE GREASE
Used instead of UHMW tape that will be visible or not fit.
Note: Will only last a few months.
SILICONE SPRAY
Use when grease cannot be applied.
DUCT TAPE
Use to eliminate movement.

CONFIRM THE REPAIR

Confirm that the cause of a noise is repaired by test driving the vehicle. Operate the vehicle under the same conditions as when the noise originally occurred. Refer to the notes on the Diagnostic Worksheet.

Generic Squeak and Rattle Troubleshooting

INFOID:0000000001704260

Refer to Table of Contents for specific component removal and installation information.

INSTRUMENT PANEL

Most incidents are caused by contact and movement between:

1. The cluster lid A and instrument panel
2. Acrylic lens and combination meter housing
3. Instrument panel to front pillar garnish
4. Instrument panel to windshield
5. Instrument panel mounting pins
6. Wiring harnesses behind the combination meter
7. A/C defroster duct and duct joint

These incidents can usually be located by tapping or moving the components to duplicate the noise or by pressing on the components while driving to stop the noise. Most of these incidents can be repaired by applying felt cloth tape or silicone spray (in hard to reach areas). Urethane pads can be used to insulate wiring harness.

CAUTION:
Do not use silicone spray to isolate a squeak or rattle. If you saturate the area with silicone, you will not be able to recheck the repair.

CENTER CONSOLE

Components to pay attention to include:

1. Shifter assembly cover to finisher
2. A/C control unit and cluster lid C
3. Wiring harnesses behind audio and A/C control unit

The instrument panel repair and isolation procedures also apply to the center console.

DOORS

Pay attention to the:

1. Finisher and inner panel making a slapping noise
2. Inside handle escutcheon to door finisher
3. Wiring harnesses tapping
4. Door striker out of alignment causing a popping noise on starts and stops

Tapping or moving the components or pressing on them while driving to duplicate the conditions can isolate many of these incidents. You can usually insulate the areas with felt cloth tape or insulator foam blocks from the NISSAN Squeak and Rattle Kit (J-43980) to repair the noise.

TRUNK

Trunk noises are often caused by a loose jack or loose items put into the trunk by the owner.
In addition look for:

1. Trunk lid bumpers out of adjustment
2. Trunk lid striker out of adjustment
3. The trunk lid torsion bars knocking together
4. A loose license plate or bracket

Most of these incidents can be repaired by adjusting, securing or insulating the item(s) or component(s) causing the noise.

SUNROOF/HEADLINING

Noises in the sunroof/headlining area can often be traced to one of the following:

1. Sunroof lid, rail, linkage or seals making a rattle or light knocking noise
2. Sun visor shaft shaking in the holder
3. Front or rear windshield touching headliner and squeaking

Again, pressing on the components to stop the noise while duplicating the conditions can isolate most of these incidents. Repairs usually consist of insulating with felt cloth tape.

OVERHEAD CONSOLE (FRONT AND REAR)

Overhead console noises are often caused by the console panel clips not being engaged correctly. Most of these incidents are repaired by pushing up on the console at the clip locations until the clips engage.
In addition look for:

1. Loose harness or harness connectors.
2. Front console map/reading lamp lense loose.
3. Loose screws at console attachment points.

SEATS

When isolating seat noise it's important to note the position the seat is in and the load placed on the seat when the noise is present. These conditions should be duplicated when verifying and isolating the cause of the noise.
Cause of seat noise include:

1. Headrest rods and holder
2. A squeak between the seat pad cushion and frame
3. The rear seatback lock and bracket

These noises can be isolated by moving or pressing on the suspected components while duplicating the conditions under which the noise occurs. Most of these incidents can be repaired by repositioning the component or applying urethane tape to the contact area.

UNDERHOOD

Some interior noise may be caused by components under the hood or on the engine wall. The noise is then transmitted into the passenger compartment.
Causes of transmitted underhood noise include:

1. Any component mounted to the engine wall
2. Components that pass through the engine wall
3. Engine wall mounts and connectors
4. Loose radiator mounting pins
5. Hood bumpers out of adjustment
6. Hood striker out of adjustment

These noises can be difficult to isolate since they cannot be reached from the interior of the vehicle. The best method is to secure, move or insulate one component at a time and test drive the vehicle. Also, engine RPM or load can be changed to isolate the noise. Repairs can usually be made by moving, adjusting, securing, or insulating the component causing the noise.

Diagnostic Worksheet

INFOID:0000000001704261

Dear Customer:
We are concerned about your satisfaction with your vehicle. Repairing a squeak or rattle sometimes can be very difficult. To help us fix your vehicle right the first time, please take a moment to note the area of the vehicle where the squeak or rattle occurs and under what conditions. You may be asked to take a test drive with a service advisor or technician to ensure we confirm the noise you are hearing.

SQUEAK & RATTLE DIAGNOSTIC WORKSHEET

I. WHERE DOES THE NOISE COME FROM? (circle the area of the vehicle)
The illustrations are for reference only, and may not reflect the actual configuration of your vehicle.

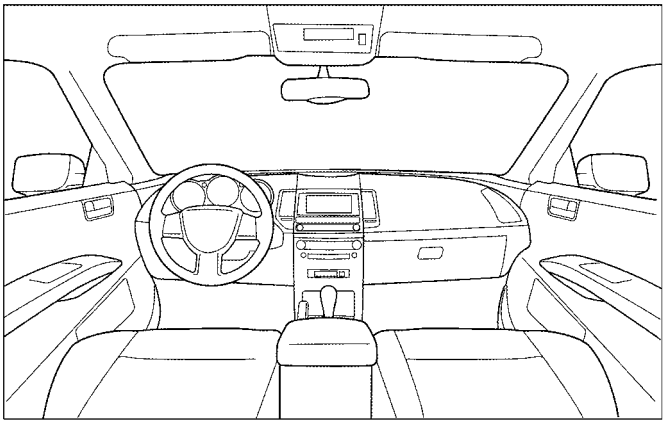

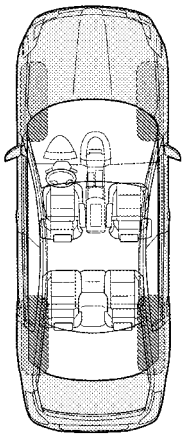

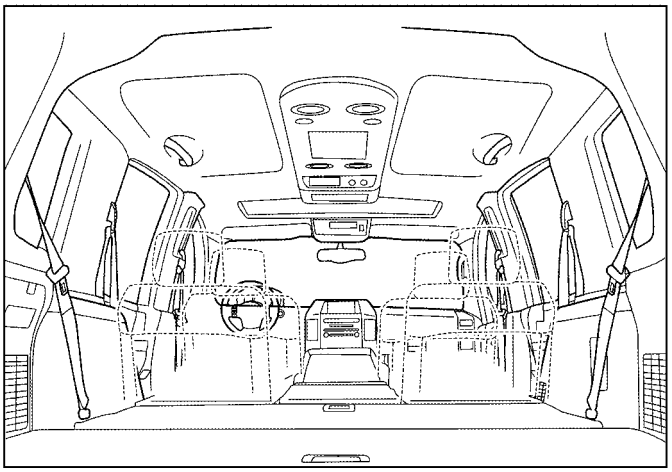

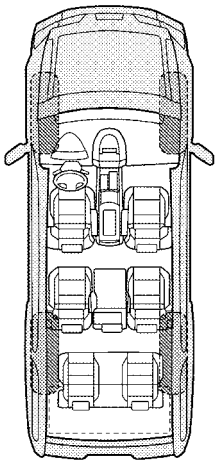

Continue to page 2 of the worksheet and briefly describe the location of the noise or rattle. In addition, please indicate the conditions which are present when the noise occurs.

-1-

LAIA0072E

SQUEAK & RATTLE DIAGNOSTIC WORKSHEET - page 2

Briefly describe the location where the noise occurs:

_____

_____

II. WHEN DOES IT OCCUR? (please check the boxes that apply)

- ☐ Anytime
- ☐ 1st time in the morning
- ☐ Only when it is cold outside
- ☐ Only when it is hot outside
- ☐ After sitting out in the rain
- ☐ When it is raining or wet
- ☐ Dry or dusty conditions
- ☐ Other:

III. WHEN DRIVING:

- ☐ Through driveways
- ☐ Over rough roads
- ☐ Over speed bumps
- ☐ Only about ____ mph
- ☐ On acceleration
- ☐ Coming to a stop
- ☐ On turns: left, right or either (circle)
- ☐ With passengers or cargo
- ☐ Other: _____
- ☐ After driving _____ miles or _____ minutes

IV. WHAT TYPE OF NOISE

- ☐ Squeak (like tennis shoes on a clean floor)
- ☐ Creak (like walking on an old wooden floor)
- ☐ Rattle (like shaking a baby rattle)
- ☐ Knock (like a knock at the door)
- ☐ Tick (like a clock second hand)
- ☐ Thump (heavy muffled knock noise)
- ☐ Buzz (like a bumble bee)

TO BE COMPLETED BY DEALERSHIP PERSONNEL

Test Drive Notes:

_____

_____

_____

	YES	NO	Initials of person performing
Vehicle test driven with customer	☐	☐	_____
- Noise verified on test drive	☐	☐	_____
- Noise source located and repaired	☐	☐	_____
- Follow up test drive performed to confirm repair	☐	☐	_____

VIN: _____ Customer Name _____

W.O.# _____ Date: _____

This form must be attached to Work Order

LAIA0071E

FRONT SEAT

Driver Seat

INFOID:0000000001704262

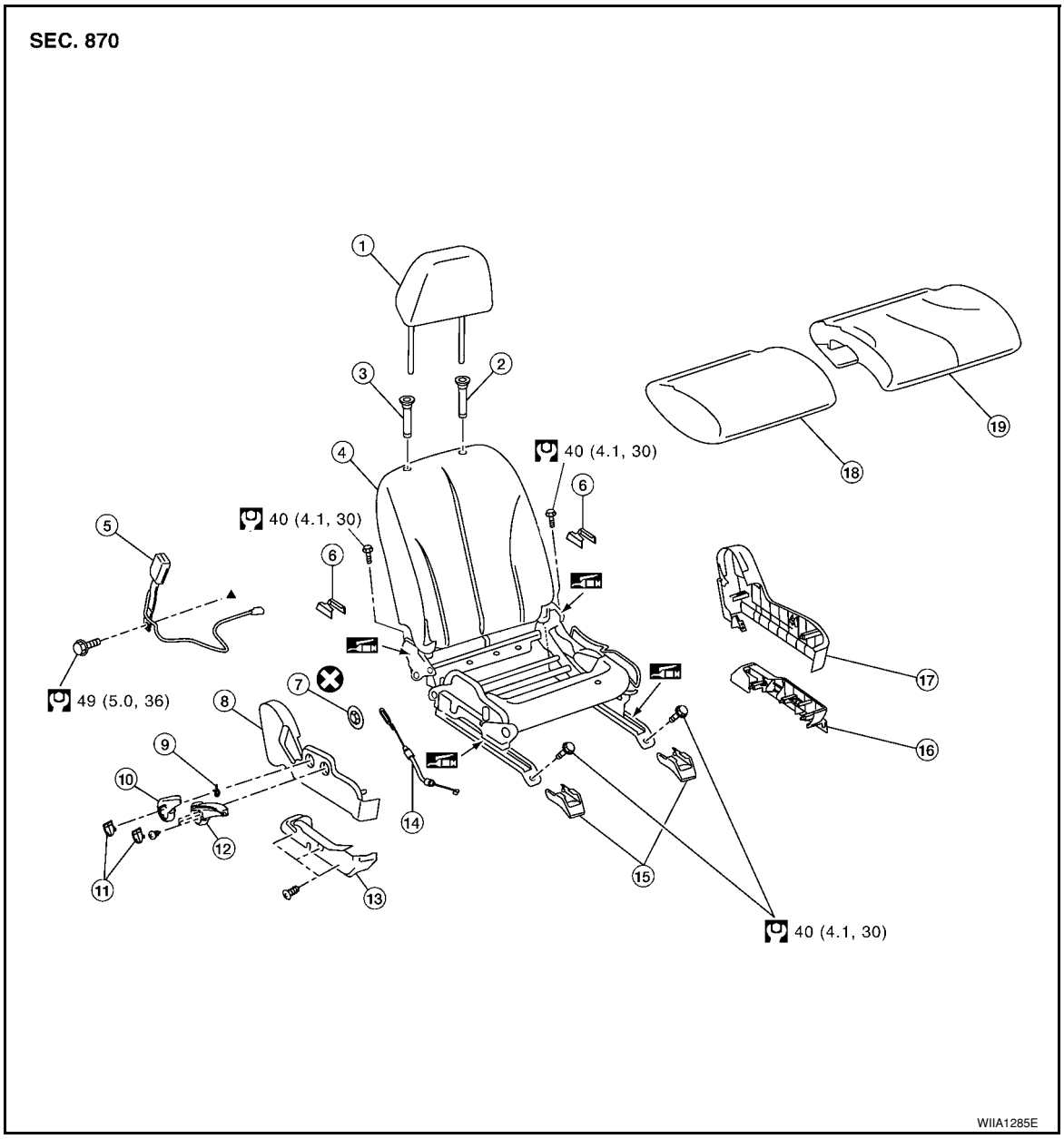

1. Headrest
2. Headrest holder (free)
3. Headrest holder (locked)
4. Seat assembly
5. Seat belt buckle
6. Rear leg cover
7. Push nut
8. Seat cushion inner finisher
9. Snap pin
10. Reclining lever
11. Lever cover
12. Lifter lever
13. Seat cushion finisher B
14. Reclining device control wire
15. Front leg cover
16. Seat cushion lower finisher
17. Seat cushion outer finisher
18. Seat cushion pad
19. Seat cushion trim

Passenger Seat

INFOID:0000000001704263

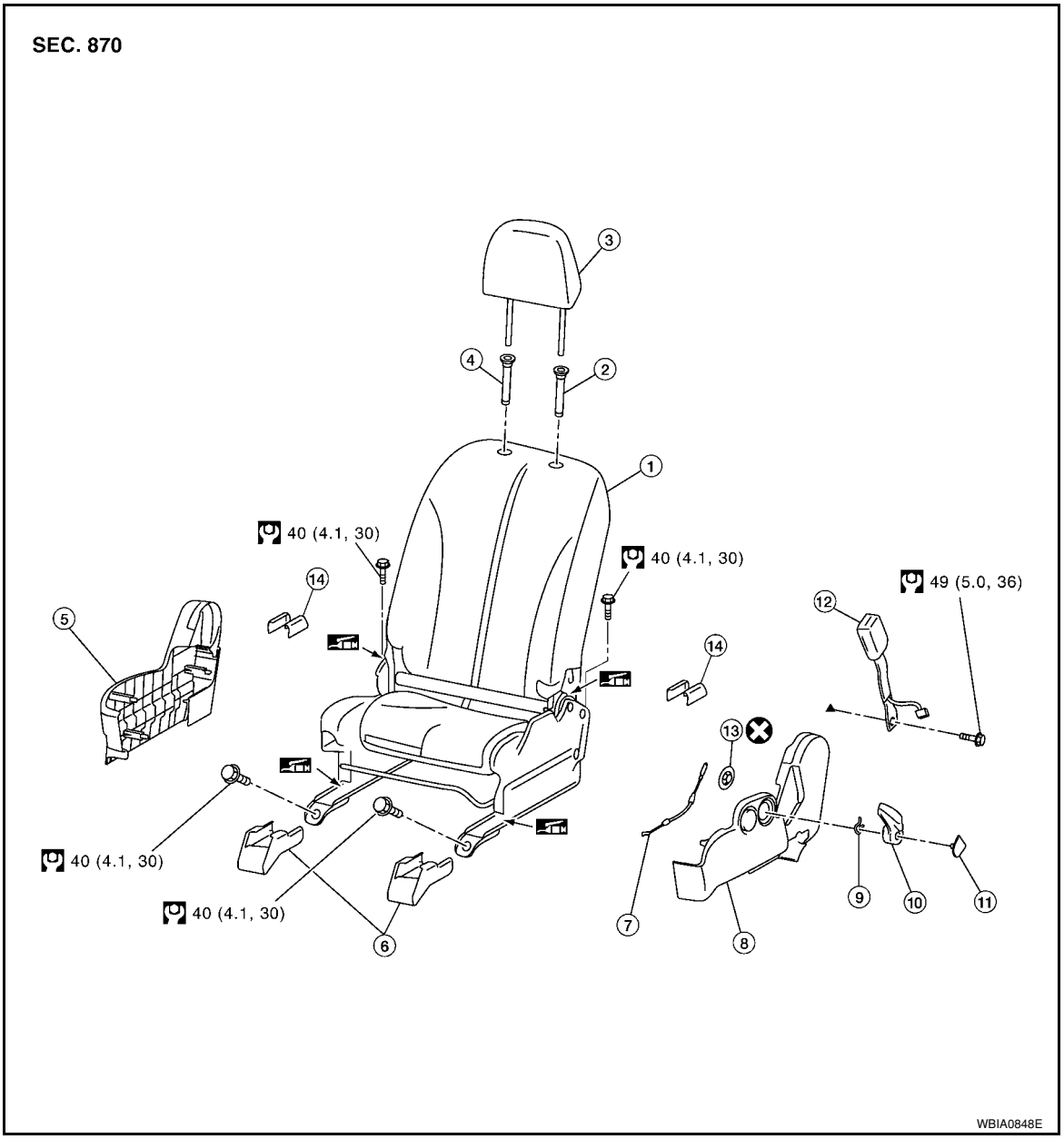

1. Seat assembly	2. Head rest holder (free)	3. Headrest
4. Headrest holder (locked)	5. Seat cushion outer finisher	6. Front leg cover
7. Reclining device control wire	8. Seat cushion inner finisher	9. Snap pin
10. Reclining lever knob	11. Lever cover	12. Seat belt buckle
13. Push nut	14. Rear leg cover	

Removal and Installation

INFOID:0000000001704264

CAUTION:
- **When removing and installing, use shop cloths to protect parts from damage.**
- **Disconnect both battery cables before work.**

MANUAL SEAT

Removal

1. Remove the rear leg covers.

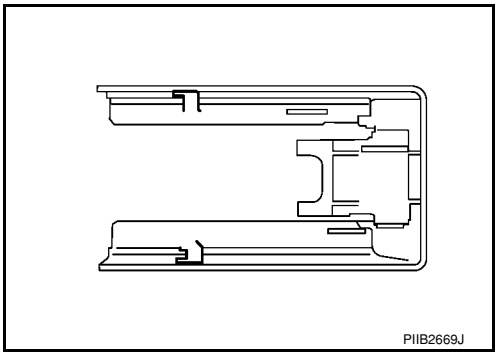

2. Remove the front leg covers.

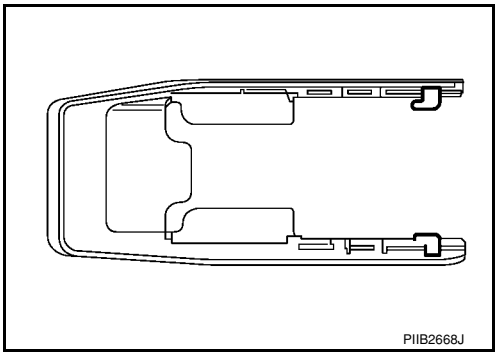

3. Remove the mounting bolts on the back side of the front seat. (TORX bolt: T50)
4. Remove the mounting bolts on the front side of the front seat. (TORX bolt: T50)
5. Disconnect the harness connector under the seat and remove harness securing clips.
   CAUTION:
   Before removal, be sure to turn ignition switch OFF, disconnect both battery cables, and then wait for at least 3 minutes.
6. Set seatback in a neutral position, and then remove front seat from the vehicle.

Installation
Install in the reverse order of removal. Be careful of the following three points.
- Before the installation, confirm that the inside and outside slide rails are locked at the same positions.
- Confirm that the slide rail location pin is set to the hole on the floor.
- Clamp the harness in position.

Disassembly and Assembly

INFOID:0000000001704265

SEAT CUSHION TRIM AND PAD

CAUTION:
- **Front passenger seat is equipped with an Occupant Classification System sensor and control module. Do not disassemble front passenger seat cushion assembly or remove the trim as this will affect the Occupant Classification System calibration.**
- **During installation, the wire harness clips must be installed in the holes they were originally in. Do not add additional clips.**

Disassembly
1. Remove the retainer of seat cushion trim.
2. Remove the hog rings to separate the seat cushion pad and seat cushion trim.
3. Remove seat cushion trim and seat cushion pad from the seat cushion frame.

Assembly
Assembly is the reverse order of removal.

SEAT CUSHION FRAME

Disassembly
1. Remove the seat cushion trim and pad. Refer to "SEAT CUSHION TRIM AND PAD" .

2. Remove the seat cushion finisher B. (Driver seat)

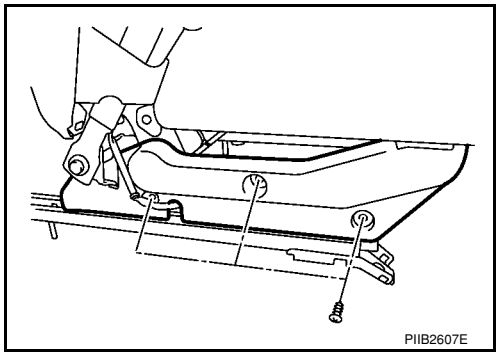

3. Remove the seat cushion lower finisher.

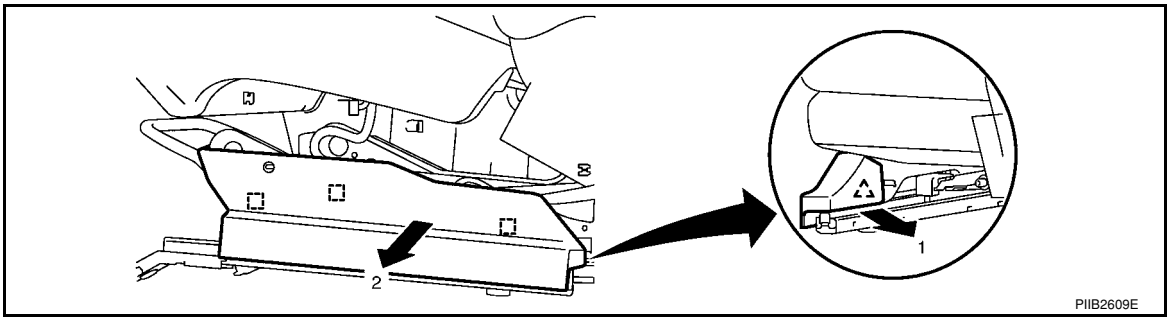

4. Remove the front seat belt buckle.

Assembly

Assembly is the reverse order of removal.

REAR SEAT

Component Parts Drawing

INFOID:0000000001704266

60:40 SPLIT FOLD DOWN SEAT - HATCHBACK

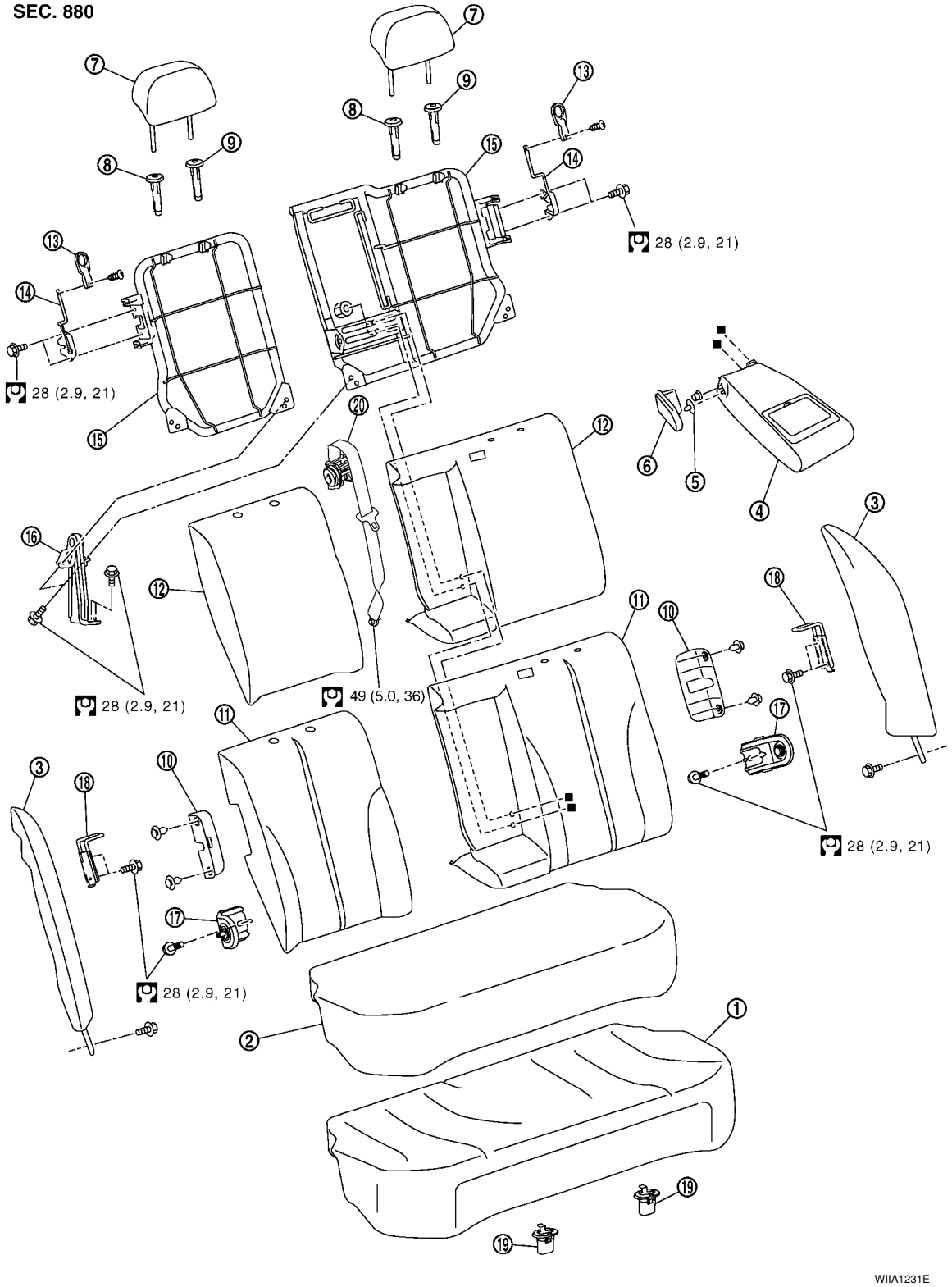

1. Seat cushion trim
2. Seat cushion pad
3. Seatback side
4. Armrest
5. Rear seat bushing
6. Armrest hinge cover

7. Headrest
8. Headrest holder (free)
9. Headrest holder (locked)
10. Striker cover
11. Seatback trim
12. Seatback pad
13. Rear seatback lock knob
14. Rear seat lock assembly
15. Seatback frame
16. Rear seatback center bracket
17. Rear seatback side bracket
18. Rear seat striker
19. Seat cushion hook
20. Center seat belt assembly

Removal and Installation

INFOID:0000000001704267

CAUTION:
When removing and installing, use shop cloths to protect parts from damage.

60:40 SPLIT FOLD DOWN SEAT - HATCHBACK

Removal

1. Pull seat cushion up, and then remove the seat cushion from the seat cushion hook.

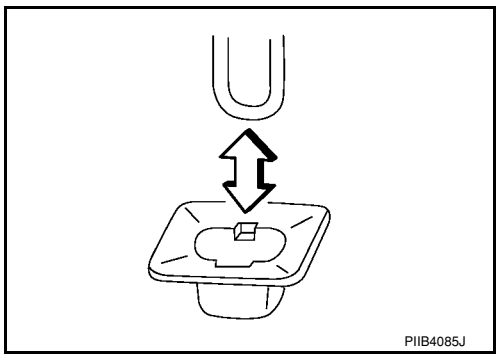

2. Remove the center seatbelt anchor bolt from under the seat.

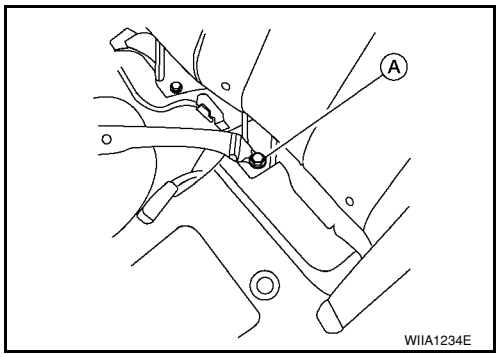

3. Remove the seatback mounting bolts from the right rear seat back brackets.

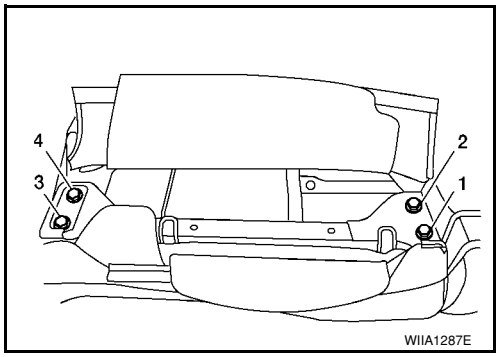

4. Remove the seatback mounting bolts from the left rear seat back brackets.

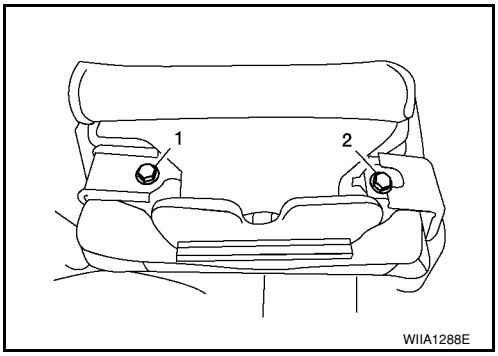

5. Remove the seatback from the vehicle.
6. Remove the kicking plate rear inner. Refer to EI-38, "Removal and Installation" .
7. Remove the bolt under the seatback side.

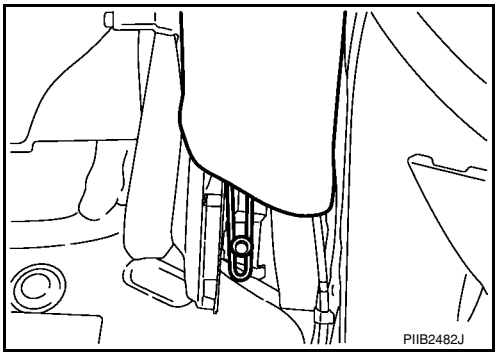

8. Pull seatback side up, and then remove seatback side.

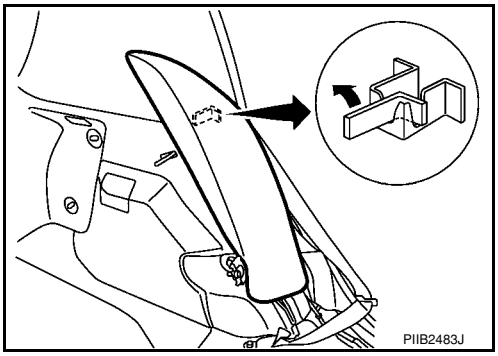

9. Remove the bolts, and then remove rear seatback center bracket.
10. Remove the bolt, and then remove rear seatback side bracket from the vehicle.

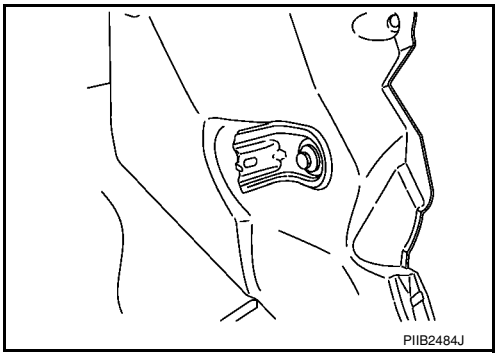

11. Remove the rear seatback finisher. Refer to EI-51, "Removal and Installation" .
12. Remove the bolts, and then remove the rear seat striker.

Installation

Installation is the reverse order of removal. Be careful of the following point.

- Seatback assembly and rear seatback side bracket installation procedure.

1. Install the rear seatback side bracket in the vehicle.

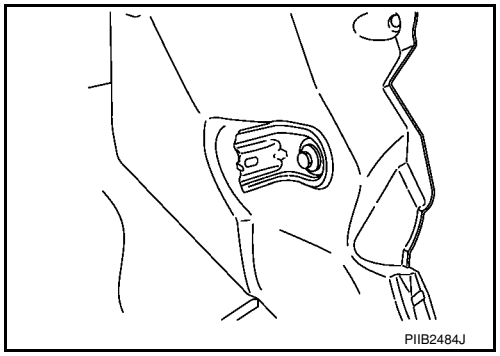

2. Temporarily tighten the seatback assembly and rear seatback side bracket.
3. Lift to fold up seatback assembly. Be sure to lock seatback assembly to rear seat striker.
4. Tighten the bolt.
   NOTE:
   Confirm that side hinge bracket location pin is set to the hole on the seatback backside.

Disassembly and Assembly

INFOID:0000000001704268

60:40 SPLIT FOLD DOWN SEAT - HATCHBACK

Disassembly of Armrest

1. Fold up the backside of the seatback trim and then remove the armrest nuts.

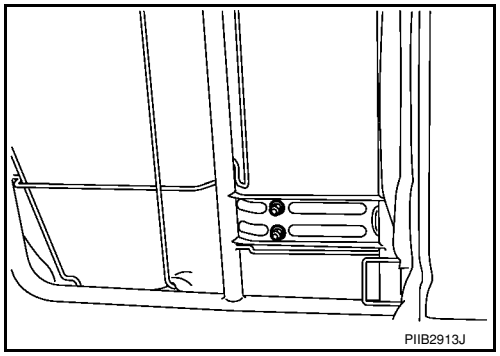

2. Push the armrest toward left side while pulling backward to remove.

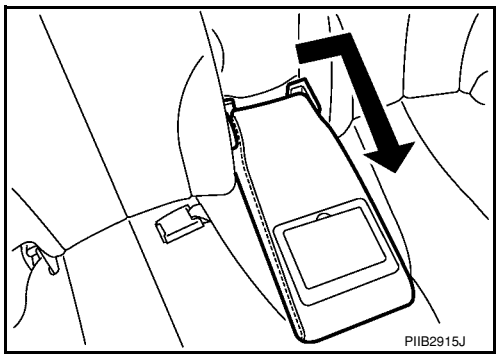

3. Remove the rear seat bushing, and then remove the armrest hinge cover by pulling it backward.

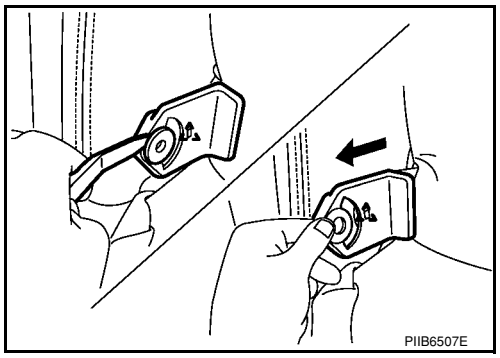

Assembly of Armrest

Assembly in the reverse order of disassembly.

Disassembly of Seatback Trim and Pad

1. Remove the headrest.
2. Remove the retainer under the back of seatback.

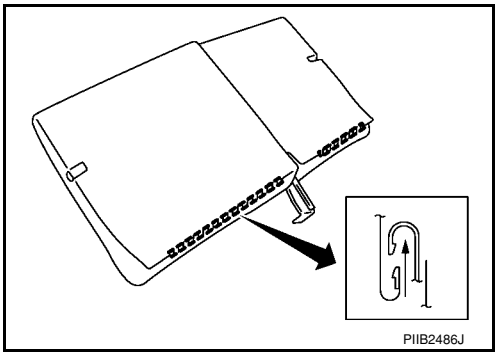

3. Remove the clips, and then remove the striker cover.

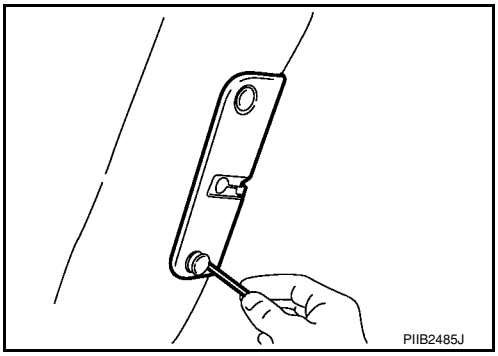

4. Remove the headrest holder.

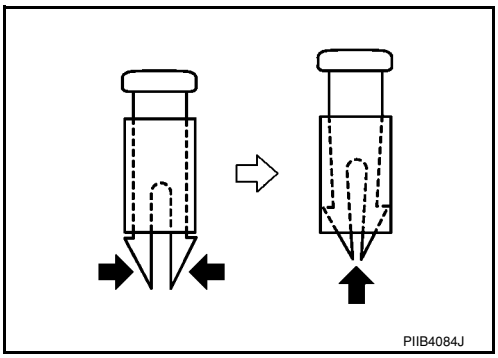

5. To remove armrest, refer to "Disassembly of Armrest " .
6. Remove the seatback trim.
7. Remove the bolts, and then remove the rear seat lock assembly.

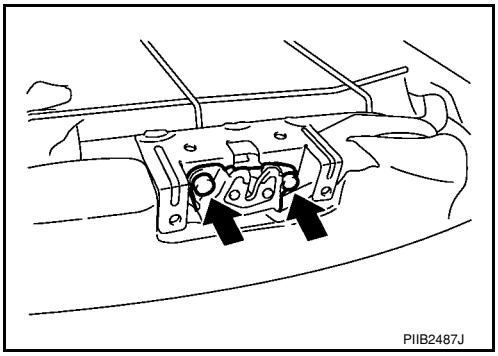

8. Remove the seatback pad from the seatback frame.
9. Remove the seatback center bracket bolt and then remove the seatback frame.

Assembly of Seatback Trim and Pad

Assembly is the reverse order of disassembly. Be careful of the following one point.

- Before installing headrest holder, check its orientation (front/rear and right/left).

Disassembly of Seat Cushion Trim and Pad

Remove the rings to separate the trim and pad.

Assembly of Seat Cushion Trim and Pad

Assembly is the reverse order of disassembly.

Component Parts Drawing

INFOID:0000000001704269

60:40 SPLIT FOLD DOWN SEAT - SEDAN

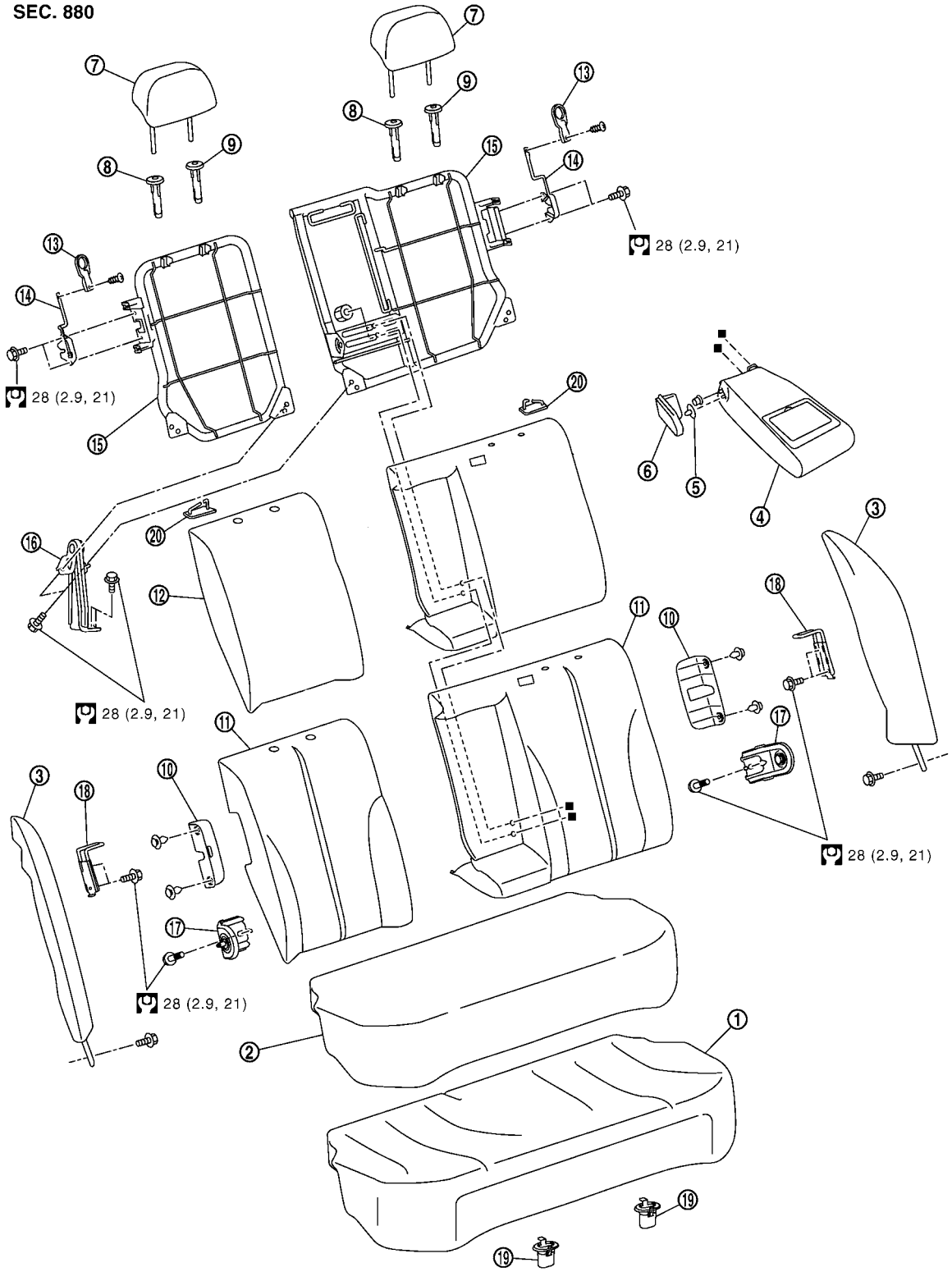

1. Seat cushion trim	2. Seat cushion pad	3. Seatback side
4. Armrest	5. Rear seat bushing	6. Armrest hinge cover
7. Headrest	8. Headrest holder (free)	9. Headrest holder (locked)
10. Striker cover	11. Seatback trim	12. Seatback pad

13. Rear seatback lock knob
14. Rear seat lock assembly
15. Seatback frame
16. Rear seatback center bracket
17. Rear seatback side bracket
18. Rear seat striker
19. Seat cushion hook
20. Seatbelt guide

Removal and Installation

INFOID:0000000001704270

CAUTION:
When removing and installing, use shop cloths to protect parts from damage.

60:40 SPLIT FOLD DOWN SEAT - SEDAN

Removal

1. Pull seat cushion up, and then remove the seat cushion from the seat cushion hook. Slide the seat cushion forward.

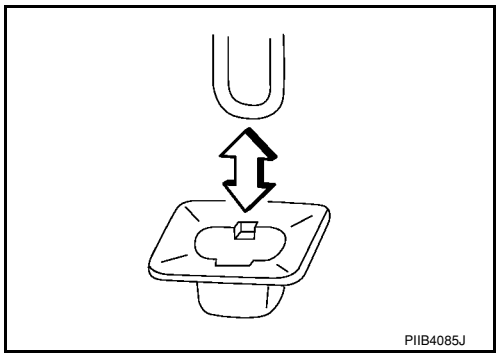

2. Remove the center seatbelt anchor bolt (A) from under the seat and slide the seatbelt through the seat cushion trim cover.

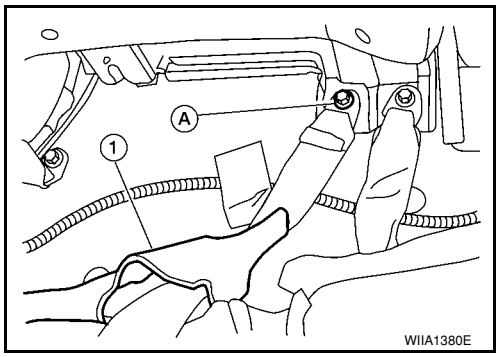

3. Fold the right seatback and remove the seatback mounting bolts (A) from the left rear seat back brackets. Remove the seatback from the vehicle.

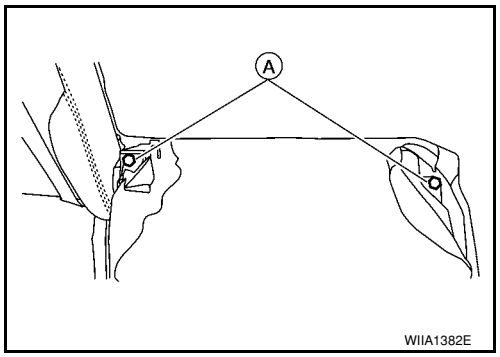

4. Fold the left seatback and remove the seatback mounting bolts (A) from the left rear seat back brackets. Remove the seatback from the vehicle.

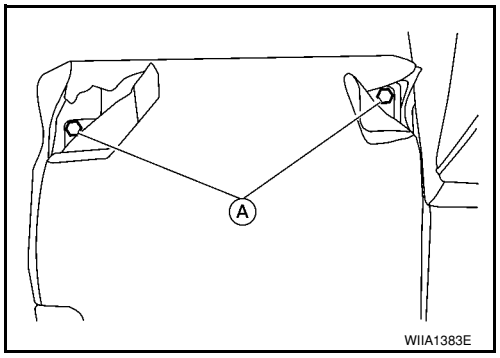

5. Remove the kicking plate rear inner. Refer to EI-38, "Removal and Installation" .
6. Remove the bolt under the seatback side.

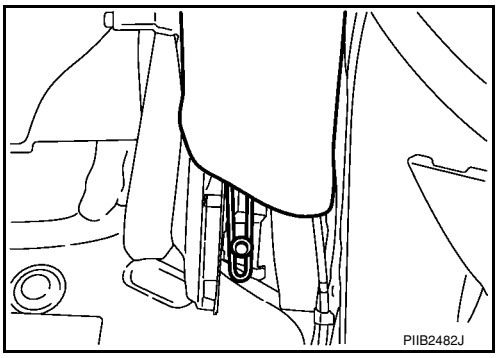

7. Pull seatback side up, and then remove seatback side.

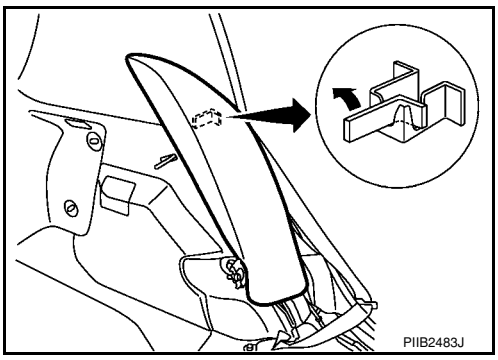

8. Remove the bolts, and then remove rear seatback center bracket.
9. Remove the bolt, and then remove rear seatback side bracket from the vehicle.

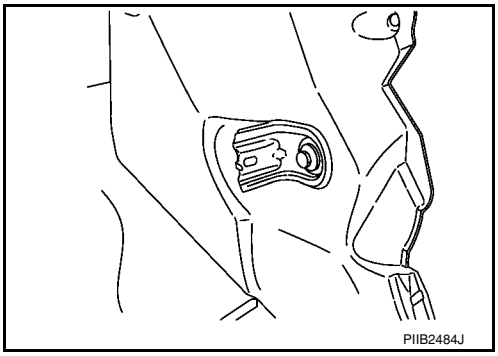

10. Remove the rear seatback finisher. Refer to EI-51, "Removal and Installation" .
11. Remove the bolts, and then remove the rear seat striker.

Installation

Installation is the reverse order of removal. Be careful of the following point.

- Seatback assembly and rear seatback side bracket installation procedure.

1. Install the rear seatback side bracket in the vehicle.

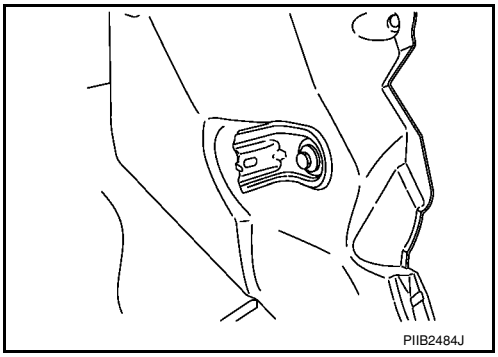

2. Temporarily tighten the seatback assembly and rear seatback side bracket.
3. Lift to fold up seatback assembly. Be sure to lock seatback assembly to rear seat striker.
4. Tighten the bolt.

NOTE:
Confirm that side hinge bracket location pin is set to the hole on the seatback backside.

Disassembly and Assembly

INFOID:0000000001704271

60:40 SPLIT FOLD DOWN SEAT - SEDAN

Disassembly of Armrest

1. Fold down the armrest and remove the armrest bolt cover (A).

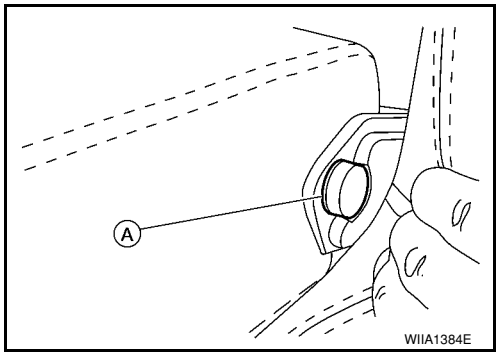

2. Remove the armrest bolt (A).

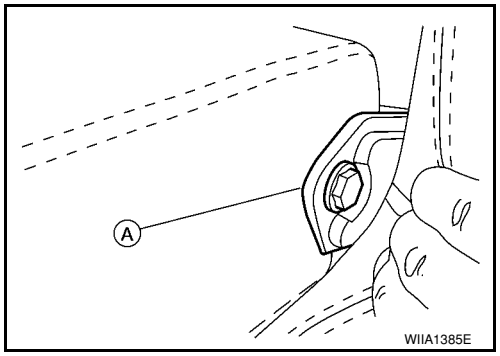

3. Push the armrest toward left side while pulling backward to remove.

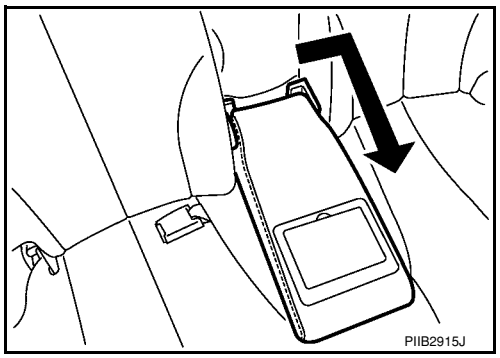

4. Remove the rear seat bushing, and then remove the armrest hinge cover by pulling it backward.

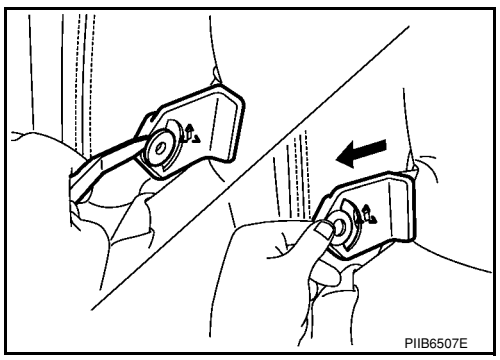

Assembly of Armrest
Assembly in the reverse order of disassembly.

Disassembly of Seatback Trim and Pad

1. Remove the headrest.
2. Remove the retainer under the back of seatback.

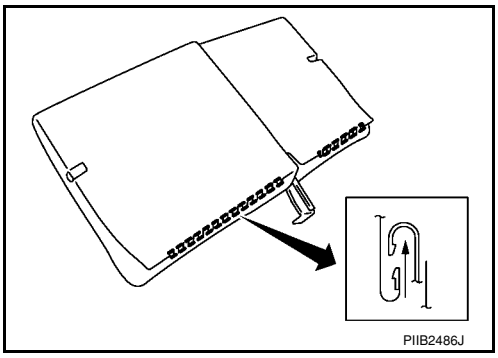

3. Remove the clips, and then remove the striker cover.

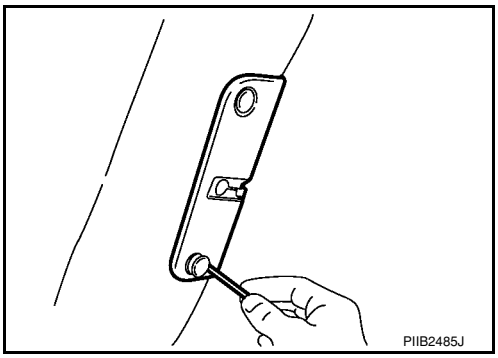

4. Remove the headrest holder.

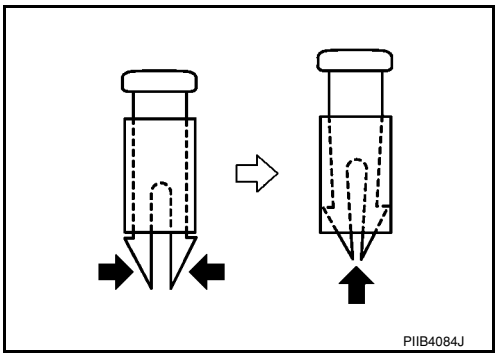

5. To remove armrest, refer to "Disassembly of Armrest " .
6. Remove the seatback trim.
7. Remove the bolts, and then remove the rear seat lock assembly.

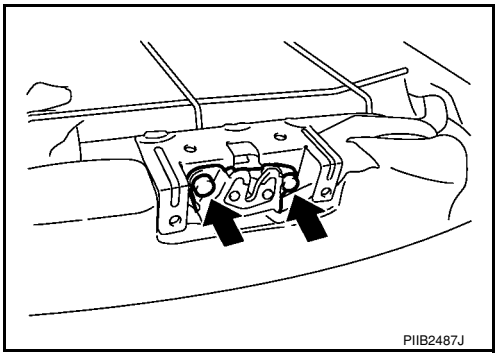

8. Remove the seatback pad from the seatback frame.
9. Remove the seatback center bracket bolt and then remove the seatback frame.

Assembly of Seatback Trim and Pad

Assembly is the reverse order of disassembly. Be careful of the following one point.

- Before installing headrest holder, check its orientation (front/rear and right/left).

Disassembly of Seat Cushion Trim and Pad
Remove the rings to separate the trim and pad.

Assembly of Seat Cushion Trim and Pad
Assembly is the reverse order of disassembly.

Removal and Installation

INFOID:0000000001704272

CAUTION:
When removing and installing, use shop cloths to protect parts from damage.

FIXED BACK SEAT

Removal

1. Pull seat cushion up, and then remove the seat cushion from the seat cushion hook. Slide the seat cushion forward.

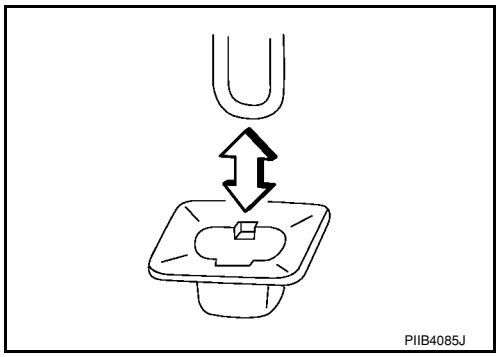

2. Remove the center seatbelt anchor bolt (A) from under the seat and slide the seatbelt through the seat cushion trim cover.

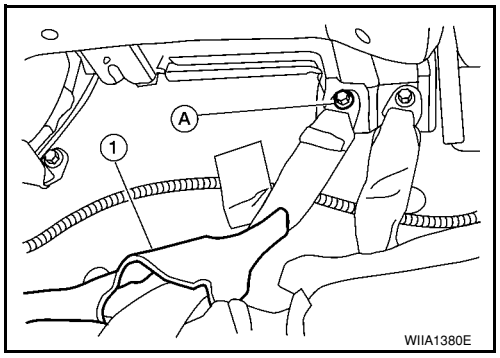

3. Remove the lower seatback bolts and lift seatback to disengage from upper seatback bracket.

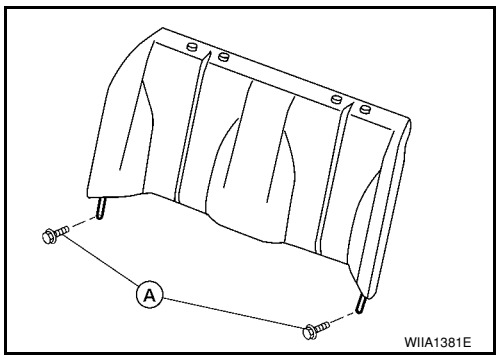

Installation
Installation is the reverse order of removal.

Disassembly and Assembly

INFOID:0000000001704273

FIXED BACK SEAT

Disassembly of SeatbackTrim and Pad
Remove the rings to separate the trim and pad.

Assembly of Seatback Trim and Pad
Assembly is the reverse order of disassembly. Be careful of the following one point.

Disassembly of Seat Cushion Trim and Pad

Remove the rings to separate the trim and pad.

Assembly of Seat Cushion Trim and Pad

Assembly is the reverse order of disassembly.

SECTION SRS
SUPPLEMENTAL RESTRAINT SYSTEM (SRS)

CONTENTS

PRECAUTION 2

PRECAUTIONS 2
Precaution for Supplemental Restraint System (SRS) "AIR BAG" and "SEAT BELT PRE-TENSIONER" 2
Precaution for SRS "AIR BAG" and "SEAT BELT PRE-TENSIONER" Service 2
Occupant Classification System Precaution 2

SYMPTOM DIAGNOSIS 3

SUPPLEMENTAL RESTRAINT SYSTEM (SRS) 3
SRS Configuration 3
Driver Air Bag Module 4
Front Passenger Air Bag Module 4
Front Side Air Bag 4
Side Curtain Air Bag 4
Front Seat Belt Pre-tensioner with Load Limiter 5
Occupant Classification System (OCS) 5
Direct-connect SRS Component Connectors 6

TROUBLE DIAGNOSIS 7
Trouble Diagnosis Introduction 7
SRS Component Parts Location 9
Schematic 10
Wiring Diagram - SRS- 11
CONSULT-III Function (AIR BAG) 16
Self-Diagnosis Function (Without CONSULT-III) 17
SRS Operation Check 18
Trouble Diagnosis with CONSULT-III 19
Trouble Diagnosis without CONSULT-III 27
Trouble Diagnosis: "AIR BAG" Warning Lamp Does Not Turn Off 30
Trouble Diagnosis: "AIR BAG" Warning Lamp Does Not Turn On 31

ON-VEHICLE REPAIR 33

DRIVER AIR BAG MODULE 33
Removal and Installation 33

SPIRAL CABLE 36
Removal and Installation 36

FRONT PASSENGER AIR BAG MODULE 38
Removal and Installation 38

SIDE CURTAIN AIR BAG MODULE 39
Component 39
Removal and Installation 39

CRASH ZONE SENSOR 41
Removal and Installation 41

SIDE AIR BAG (SATELLITE) SENSOR 42
Removal and Installation 42

FRONT SEAT BELT PRE-TENSIONER 43
Removal and Installation 43

DIAGNOSIS SENSOR UNIT 44
Removal and Installation 44

OCCUPANT CLASSIFICATION SYSTEM CONTROL UNIT 45
Removal and Installation 45

COLLISION DIAGNOSIS 46
For Frontal Collision 46
For Side and Rollover Collision 47

PRECAUTION

PRECAUTIONS

Precaution for Supplemental Restraint System (SRS) "AIR BAG" and "SEAT BELT PRE-TENSIONER"

INFOID:0000000001703904

The Supplemental Restraint System such as “AIR BAG” and “SEAT BELT PRE-TENSIONER”, used along with a front seat belt, helps to reduce the risk or severity of injury to the driver and front passenger for certain types of collision. This system includes seat belt switch inputs and dual stage front air bag modules. The SRS system uses the seat belt switches to determine the front air bag deployment, and may only deploy one front air bag, depending on the severity of a collision and whether the front occupants are belted or unbelted.
Information necessary to service the system safely is included in the SR and SB section of this Service Manual.

WARNING:

- **To avoid rendering the SRS inoperative, which could increase the risk of personal injury or death in the event of a collision which would result in air bag inflation, all maintenance must be performed by an authorized NISSAN/INFINITI dealer.**
- **Improper maintenance, including incorrect removal and installation of the SRS, can lead to personal injury caused by unintentional activation of the system. For removal of Spiral Cable and Air Bag Module, see the SR section.**
- **Do not use electrical test equipment on any circuit related to the SRS unless instructed to in this Service Manual. SRS wiring harnesses can be identified by yellow and/or orange harnesses or harness connectors.**

Precaution for SRS "AIR BAG" and "SEAT BELT PRE-TENSIONER" Service

INFOID:0000000001703905

- Do not use electrical test equipment to check SRS circuits unless instructed to in this Service Manual.
- Before servicing the SRS, turn ignition switch OFF, disconnect both battery cables and wait at least 3 minutes.
  For approximately 3 minutes after the cables are removed, it is still possible for the air bag and seat belt pretensioner to deploy. Therefore, do not work on any SRS connectors or wires until at least 3 minutes have passed.
- The air bag diagnosis sensor unit must always be installed with the arrow mark “⇐” pointing toward the front of the vehicle for proper operation. Also check air bag diagnosis sensor unit for cracks, deformities or rust before installation and replace as required.
- The spiral cable must be aligned with the neutral position since its rotations are limited. Do not attempt to turn steering wheel or column after removal of steering gear.
- Handle air bag module carefully. Always place driver and front passenger air bag modules with the pad side facing upward and seat mounted front side air bag module standing with the stud bolt side facing down.
- Conduct self-diagnosis to check entire SRS for proper function after replacing any components.
- After air bag inflates, the front instrument panel assembly should be replaced if damaged.
- Do not reuse center pillar upper garnish if removed.

Occupant Classification System Precaution

INFOID:0000000001703906

Replace control unit and passenger front seat cushion as an assembly.

SYMPTOM DIAGNOSIS

SUPPLEMENTAL RESTRAINT SYSTEM (SRS)

SRS Configuration

INFOID:0000000001703907

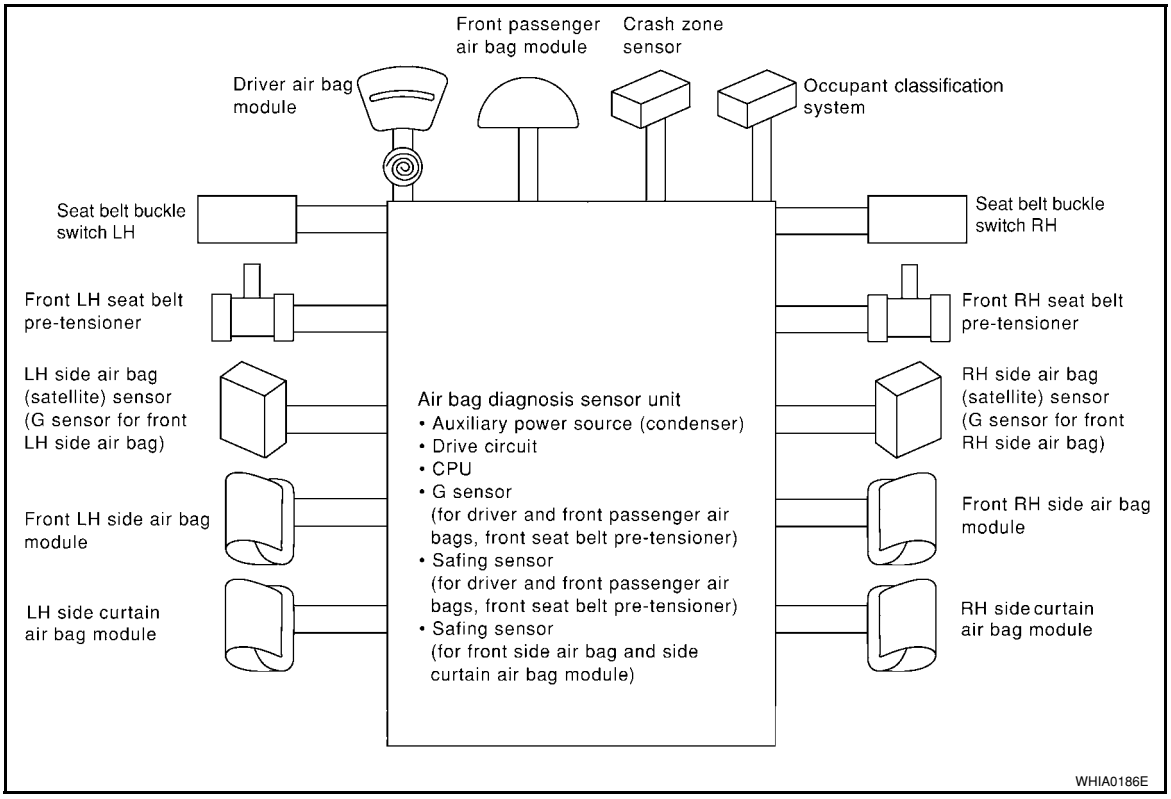

The air bag deploys if the air bag diagnosis sensor unit is activated while the ignition switch is in the ON or START position.
The collision modes for which supplemental restraint systems are activated are different among the SRS systems. For example, the driver air bag module, front passenger air bag module and front seat belt pre-tensioners are activated in a frontal collision but not in a side collision.
SRS configurations for some collision modes are as follows:

SRS configuration	Frontal collision	Left side collision	Right side collision
Driver air bag module	×	—	—
Front passenger air bag module	×	—	—
Front LH seat belt pre-tensioner	×	—	—
Front RH seat belt pre-tensioner	×	—	—
Front LH side air bag module	—	×	—
Front RH side air bag module	—	—	×
LH side curtain air bag module	—	×	—
RH side curtain air bag module	—	—	×

Driver Air Bag Module

INFOID:0000000001703908

The driver air bag module is dual stage and located in the steering wheel assembly. It operates with the SRS system in a frontal collision exceeding a specified level.

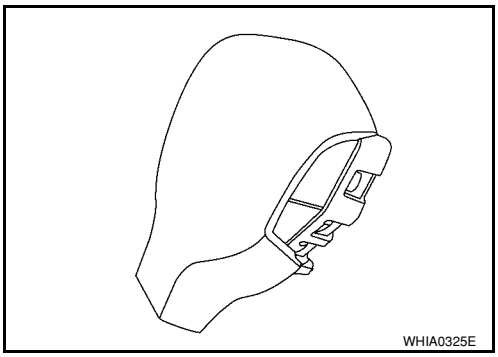

Front Passenger Air Bag Module

INFOID:0000000001703909

The front passenger air bag module is located behind the instrument panel assembly (mounted to the steering member). It operates with the SRS system in a frontal collision exceeding a specified level. Refer to SRS-5, "Occupant Classification System (OCS)" for more information.

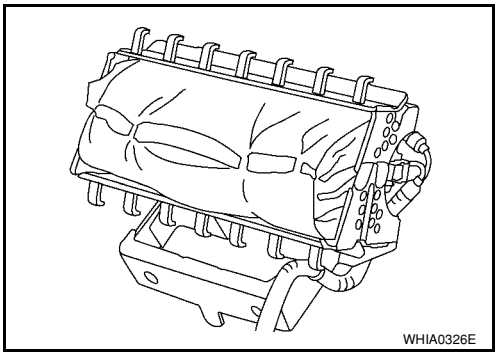

Front Side Air Bag

INFOID:0000000001703910

Front side air bag modules are built into the front seatback assemblies. Vehicles with side air bags are equipped with labels as shown.

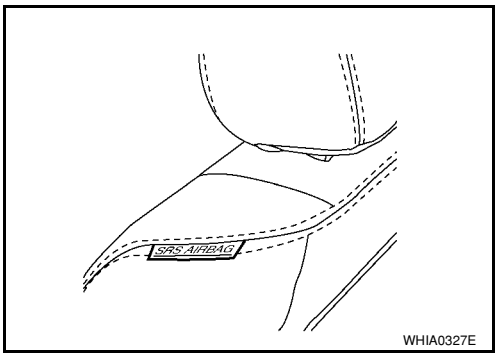

Side Curtain Air Bag

INFOID:0000000001703911

Side curtain air bag modules are located above the vehicle headlining and run from the front to the rear of the vehicle. Vehicles with side curtain air bags are equipped with labels as shown.

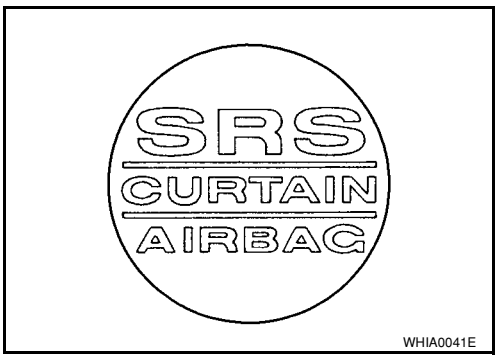

Front Seat Belt Pre-tensioner with Load Limiter

INFOID:0000000001703912

The seat belt pre-tensioner system with load limiter is installed for both the driver's seat and the front passenger's seat. It operates simultaneously with the SRS air bag system in the event of a frontal collision with an impact exceeding a specified level.
When the frontal collision with an impact exceeding a specified level occurs, seat belt slack resulting from clothing or other factors is immediately taken up by the pre-tensioner. Vehicle passengers are securely restrained.
When passengers in a vehicle are thrown forward in a collision and the restraining force of the seat belt exceeds a specified level, the load limiter permits the specified extension of the seat belt by the twisting of the ELR shaft, and a relaxation of the chest-area seat belt web tension while maintaining force.

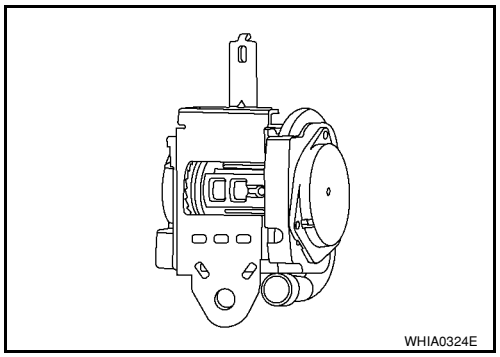

Occupant Classification System (OCS)

INFOID:0000000001703913

The occupant classification system (OCS) identifies different size occupants, out of position occupants, and detects if child seat is present in the front passenger seat. The OCS receives inputs from the occupant classification system sensor (located under the passenger seat cushion assembly) and belt tension sensor (part of the passenger front seat belt assembly and located at the belt anchor location). Depending on classification of the passenger, the OCS sends a signal to the air bag diagnosis sensor unit. The air bag diagnosis sensor unit uses this signal and the seat belt buckle switch RH signal to determine deployment or non deployment of the front passenger air bag module in the event of a collision. Depending on the signals received, the air bag diagnosis sensor unit can disable the front passenger air bag module completely.

NOTE:
In case of customer concern, CONSULT-III can be used to confirm the passenger air bag status (readiness).

Passenger Air Bag Status Conditions

Front Passenger Seat (Condition)	PASS AIR BAG OFF Indicator (Status)	Passenger Air Bag Status (Readiness)	CONSULT-III Display
Seat occupied	OFF	Active (enabled)	ON
Seat occupied NOTE	ON	Deactivated (disabled)	OFF
Seat empty	OFF	Deactivated (disabled)	OFF

NOTE:
Passenger does not meet Occupant Classification System specifications for passenger air bag activation.

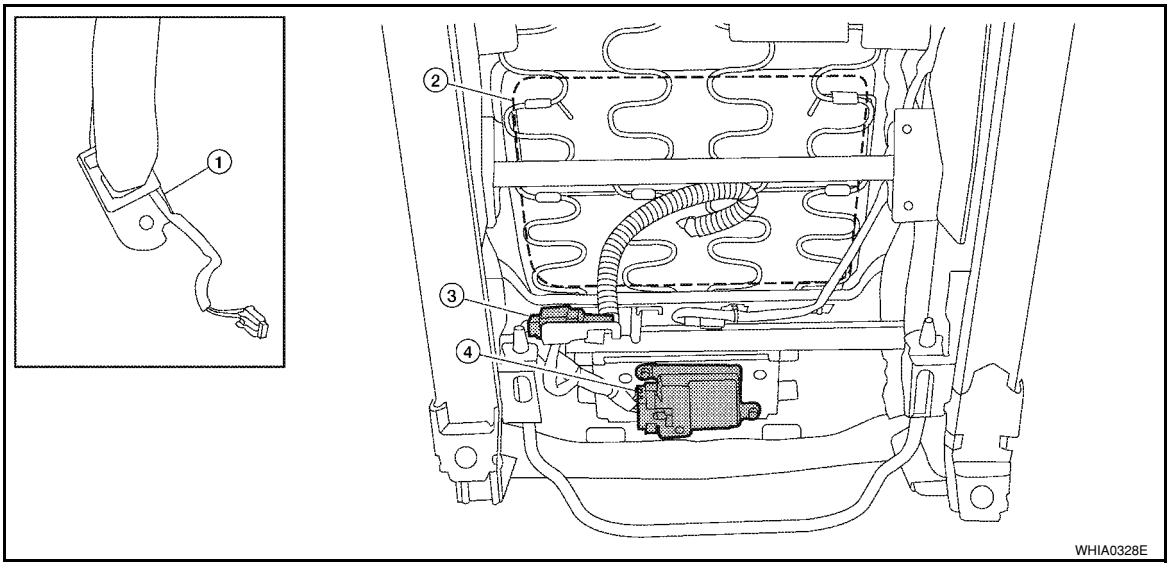

1. Belt tension sensor
2. Occupant classification system bladder
3. Occupant classification system sensor
4. Occupant classification system control unit

Direct-connect SRS Component Connectors

INFOID:0000000001703914

The following SRS components use direct-connect style harness connectors.
- Driver air bag module
- Passenger air bag module
- LH side curtain air bag module
- RH side curtain air bag module
- Front LH seat belt pre-tensioner
- Front RH seat belt pre-tensioner

Always pull up to release the locking tab prior to removing connector from SRS component.
Always push down to lock the locking tab after installing connector to SRS component. When locked, the locking tab is level with the connector housing.

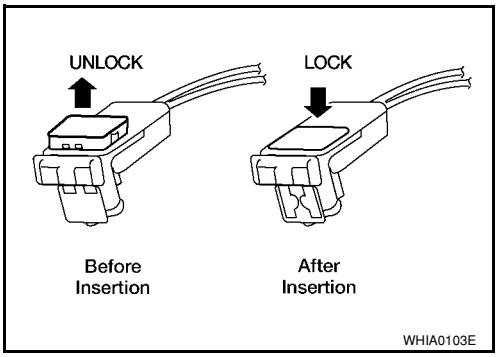

TROUBLE DIAGNOSIS

Trouble Diagnosis Introduction

INFOID:0000000001703915

CAUTION:
- **Do not use electrical test equipment on any circuit related to the SRS unless instructed to do so in this Service Manual.**
- **Do not attempt to repair, splice or modify SRS wiring harnesses. If a harness is damaged, replace it with a new one.**
- **Keep ground connections clean.**

DIAGNOSIS FUNCTION

The SRS self-diagnosis results can be read by using “AIR BAG” warning lamp and/or CONSULT-III.
The User mode is exclusively prepared for the customer (driver). This mode warns the driver of a system malfunction through the operation of the “AIR BAG” warning lamp.
The Diagnosis mode allows the technician to locate and inspect the malfunctioning part.
The mode applications for the “AIR BAG” warning lamp and CONSULT-III are as follows:

	User mode	Diagnosis mode	Display type
“AIR BAG” warning lamp	X	X	ON-OFF operation
CONSULT-III	—	X	Monitoring

HOW TO PERFORM TROUBLE DIAGNOSES FOR QUICK AND ACCURATE REPAIR

A good understanding of the malfunction conditions can make troubleshooting faster and more accurate.
In general, each customer feels differently about a malfunction. It is important to fully understand the symptoms or conditions for a customer complaint.

Information From Customer
WHAT - Vehicle model
WHEN - Date, Frequencies
WHERE - Road conditions
HOW - Operating conditions, Symptoms

Preliminary Check
Check that the following parts are in good order.
- Battery (Refer to SC-4, "How to Handle Battery".)
- Fuses (Refer to SRS-10, "Schematic".)
- System component-to-harness connections

WORK FLOW

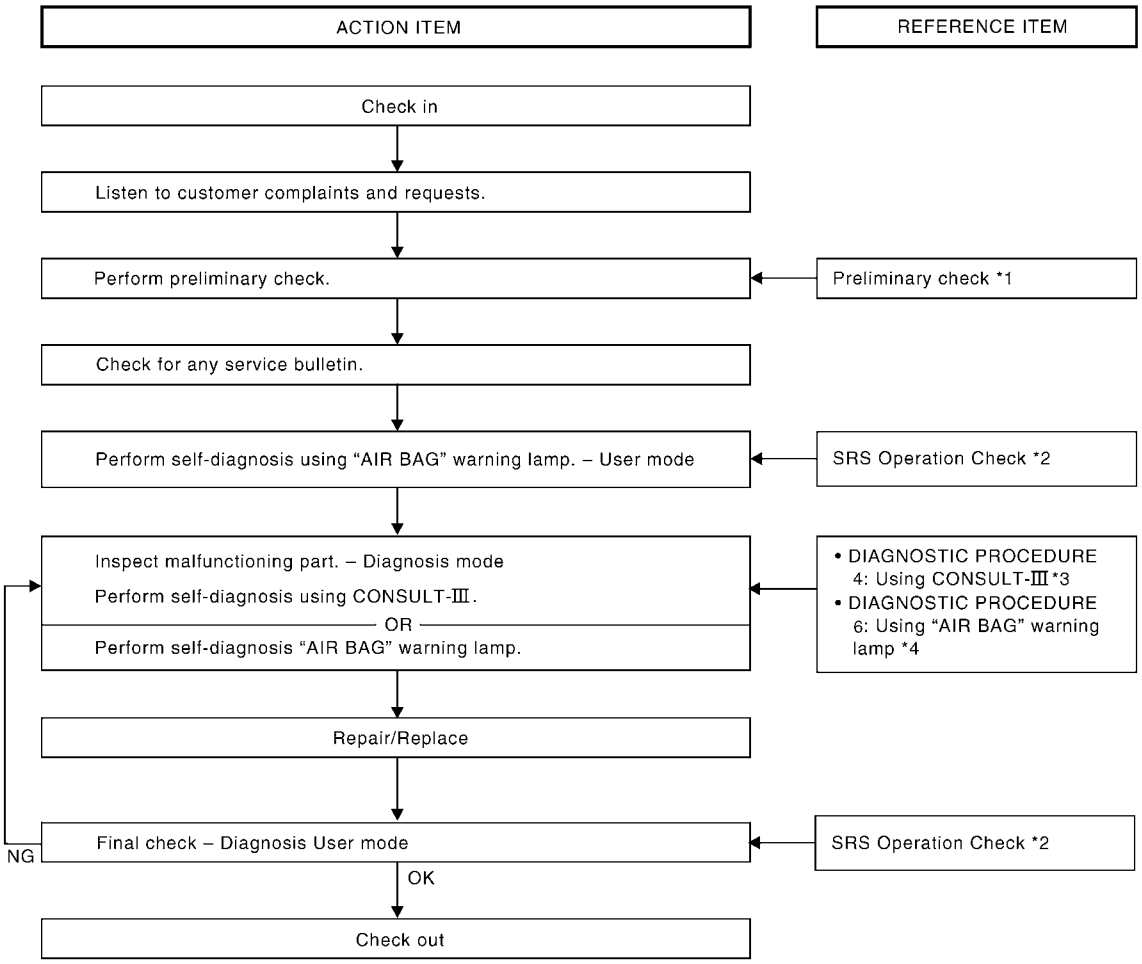

WHIA0348E

*1: "PRELIMINARY CHECK" *2: SRS-18 *3: SRS-19
*4: SRS-27

SRS Component Parts Location

INFOID:0000000001703916

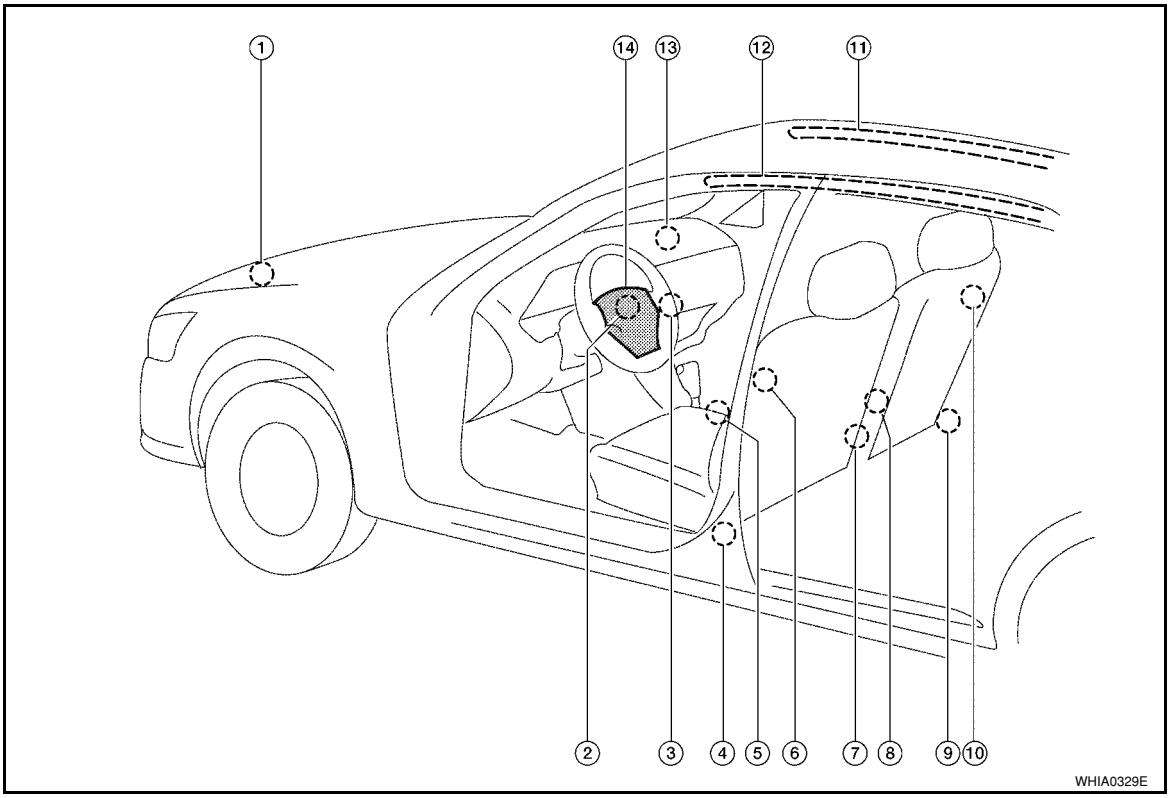

1. Crash zone sensor
2. Spiral cable
3. Front passenger air bag off indicator
4. Front LH seat belt pre-tensioner
   LH side air bag (satellite) sensor
5. Air bag diagnosis sensor unit
6. Front LH side air bag module
7. Seat belt buckle switch (LH)
   Seat belt buckle switch (RH)
8. Occupant classification system control unit
   Occupant classification system sensor
9. Front RH seat belt pre-tensioner
   RH side air bag (satellite) sensor
   Belt tension sensor
10. Front RH side air bag module
11. RH side curtain air bag module
12. LH side curtain air bag module
13. Front passenger air bag module
14. Driver air bag module

Schematic

INFOID:0000000001703917

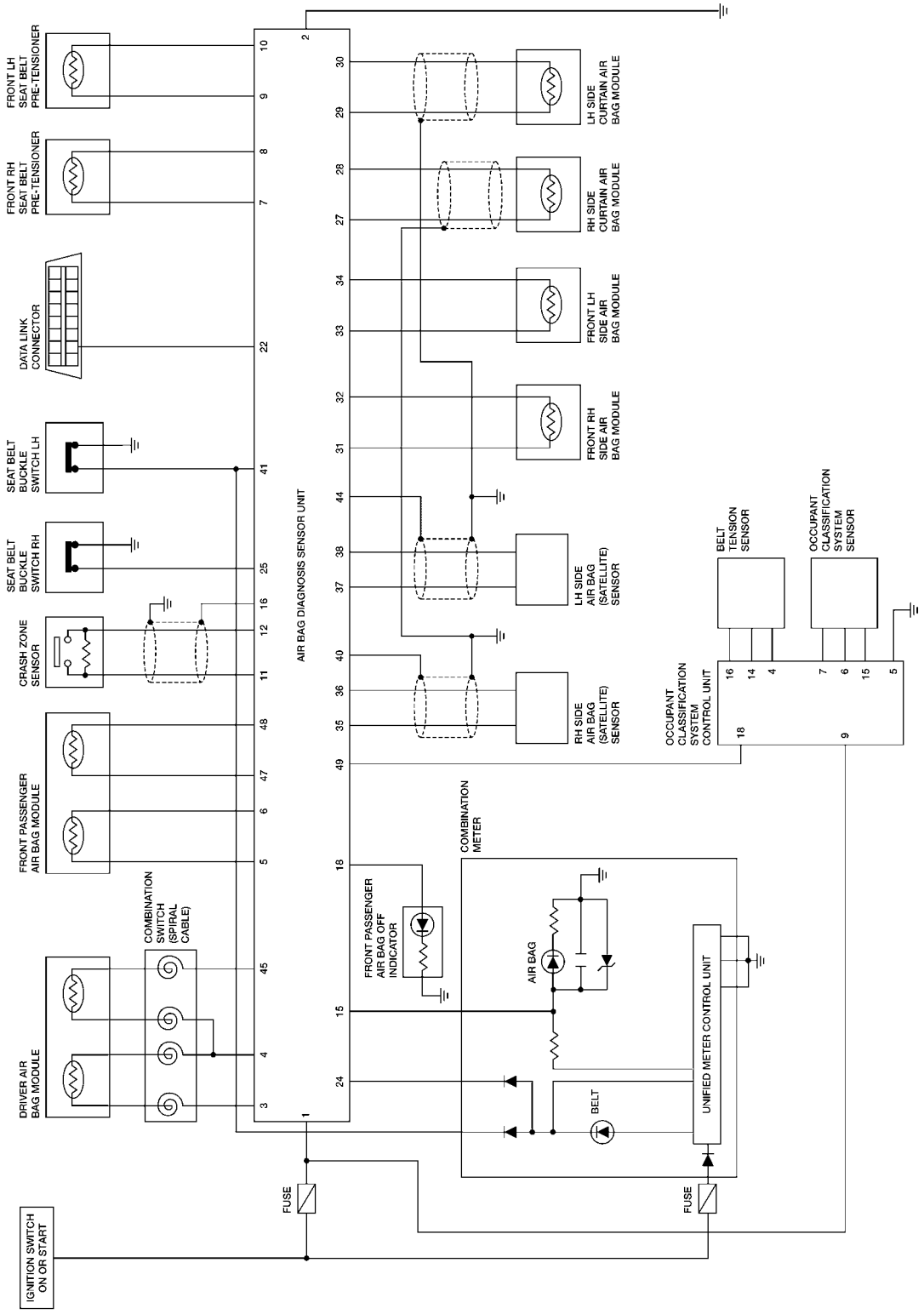

WHWA0296E

Wiring Diagram - SRS-

INFOID:0000000001703918

SRS-SRS-01

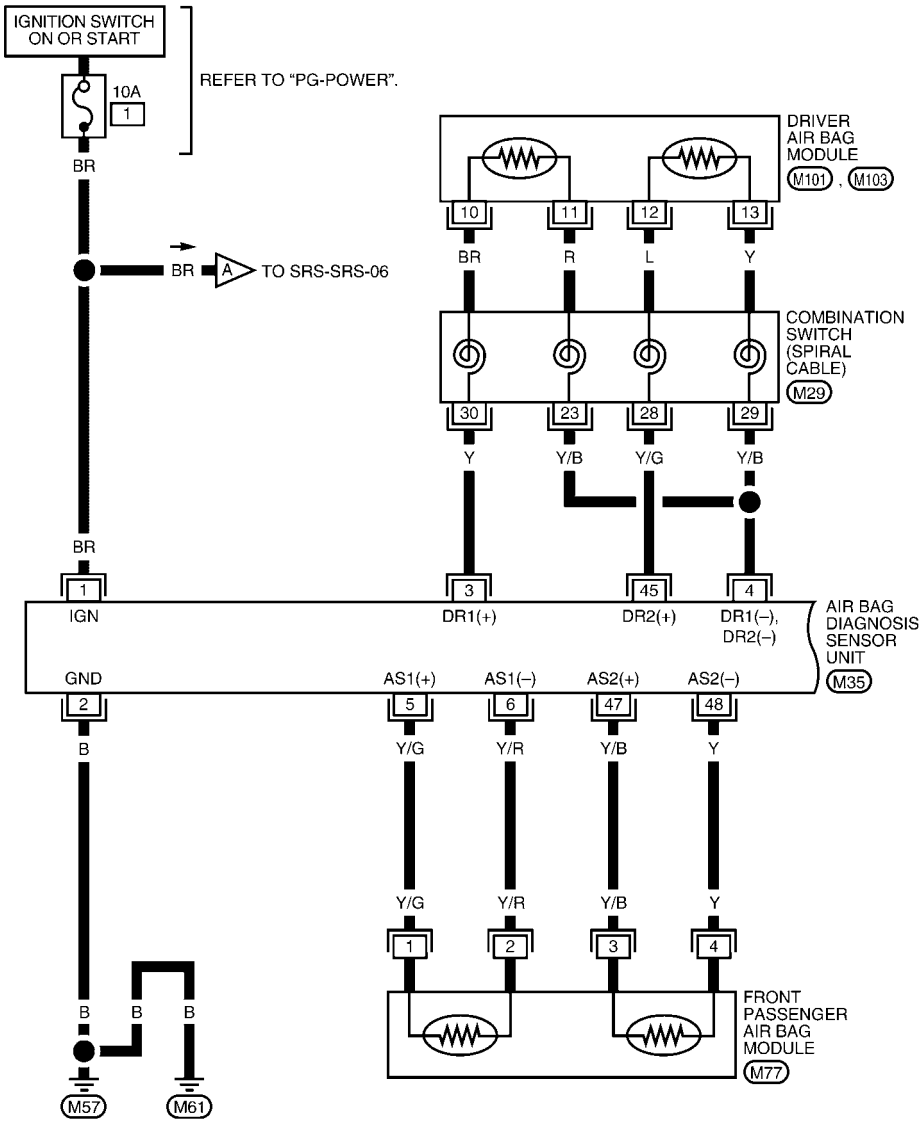

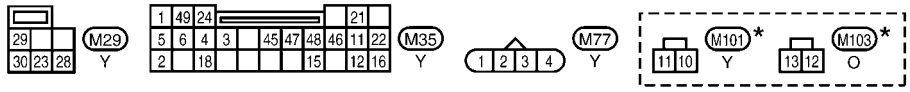

*: THIS CONNECTOR IS NOT SHOWN IN "HARNESS LAYOUT" OF PG SECTION.

WHWA0297E

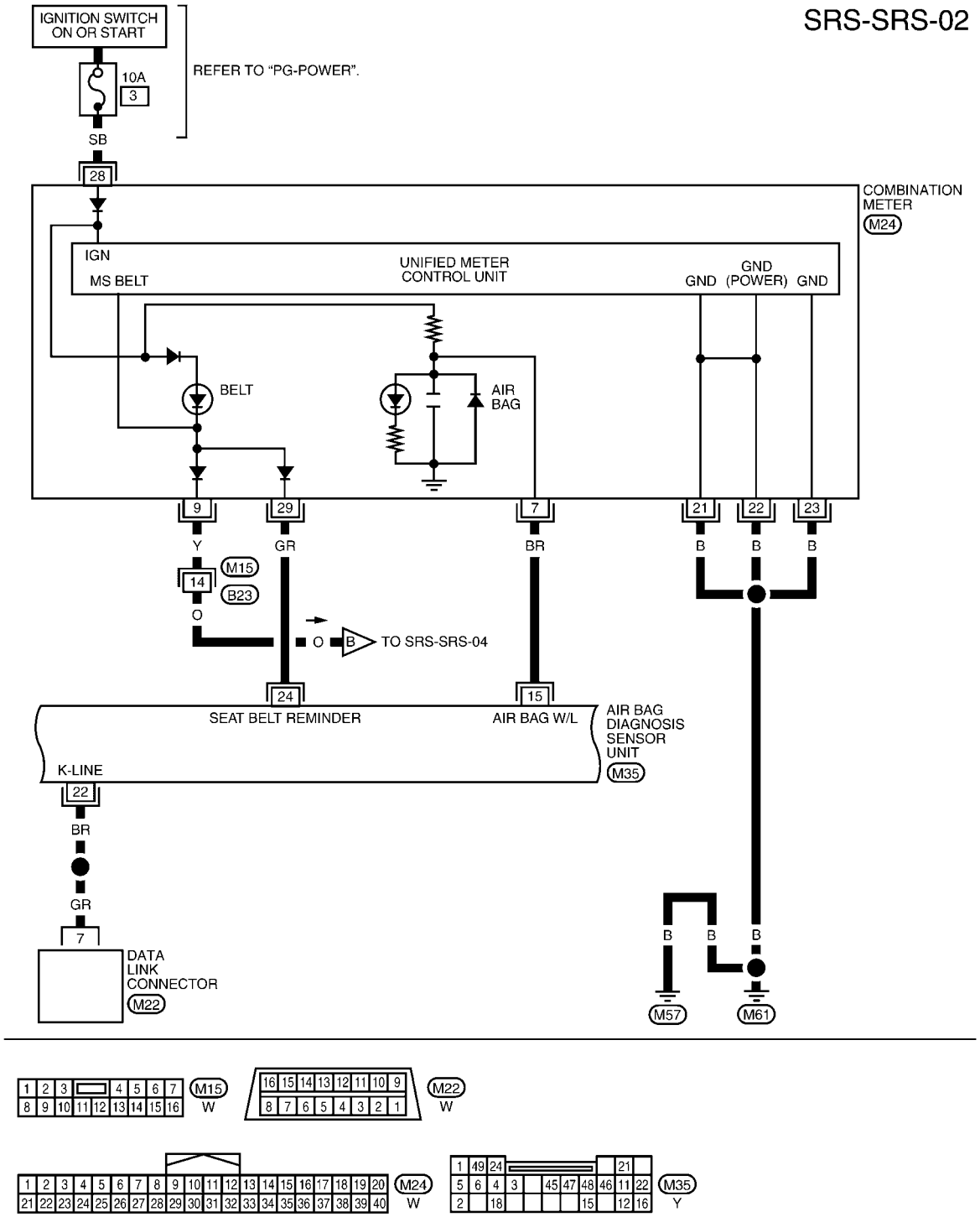
SRS-SRS-02
IGNITION SWITCH ON OR START
10A
3
REFER TO "PG-POWER".
SB
28
COMBINATION METER
M24
IGN
MS BELT
UNIFIED METER CONTROL UNIT
GND
GND (POWER) GND
BELT
AIR BAG
9
29
7
21
22
23
Y
GR
BR
B
B
B
M15
14
B23
O
O
B
TO SRS-SRS-04
24
15
SEAT BELT REMINDER
AIR BAG W/L
AIR BAG DIAGNOSIS SENSOR UNIT
M35
K-LINE
22
BR
GR
7
DATA LINK CONNECTOR
M22
B
B
B
M57
M61
M15
W
M22
W
M24
W
M35
Y
WHWA0298E

SRS-SRS-03

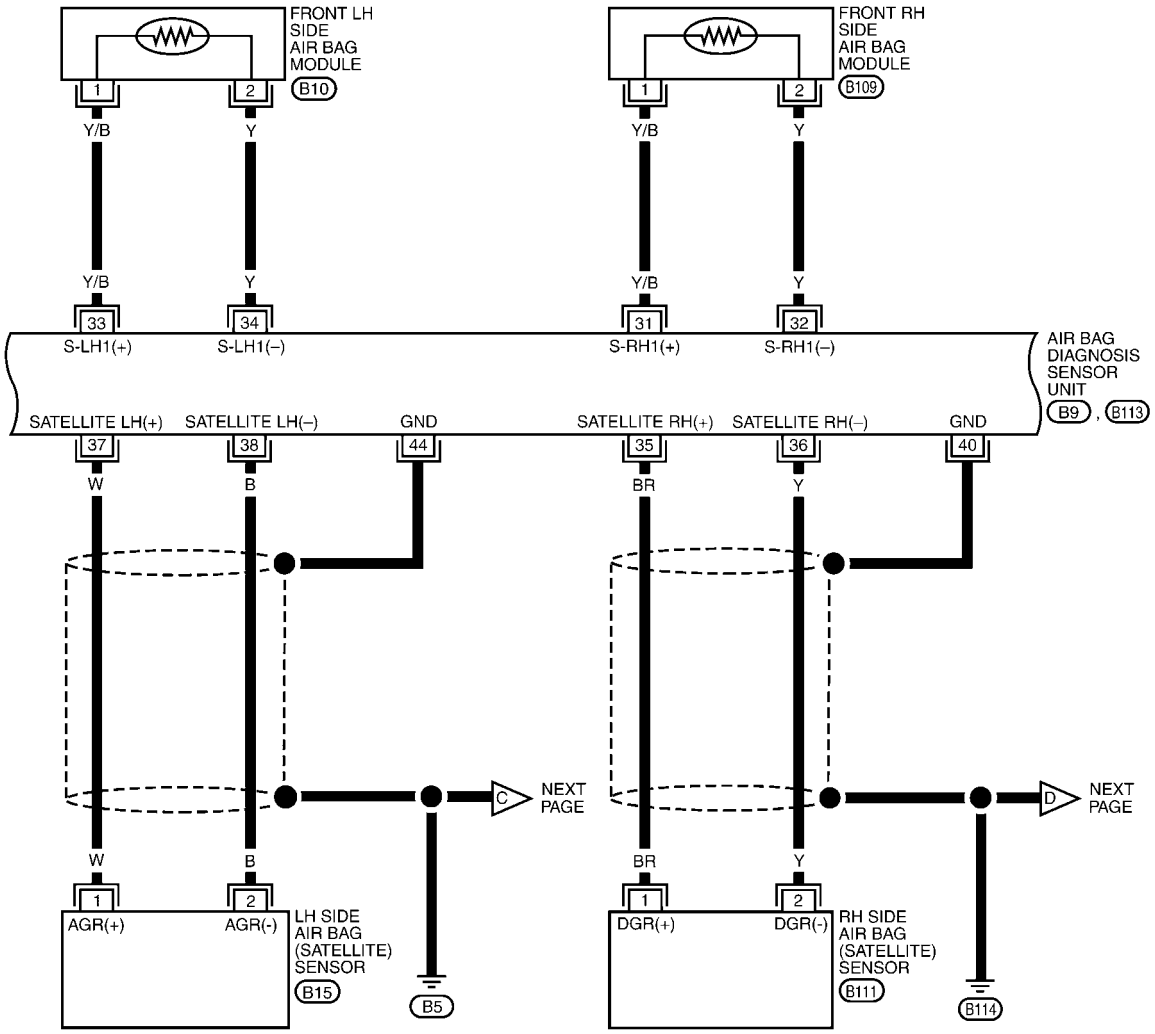

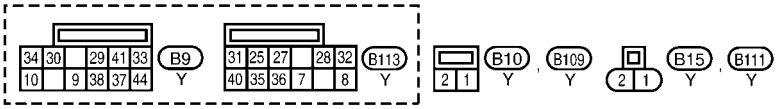

WHWA0299E

SRS-SRS-04

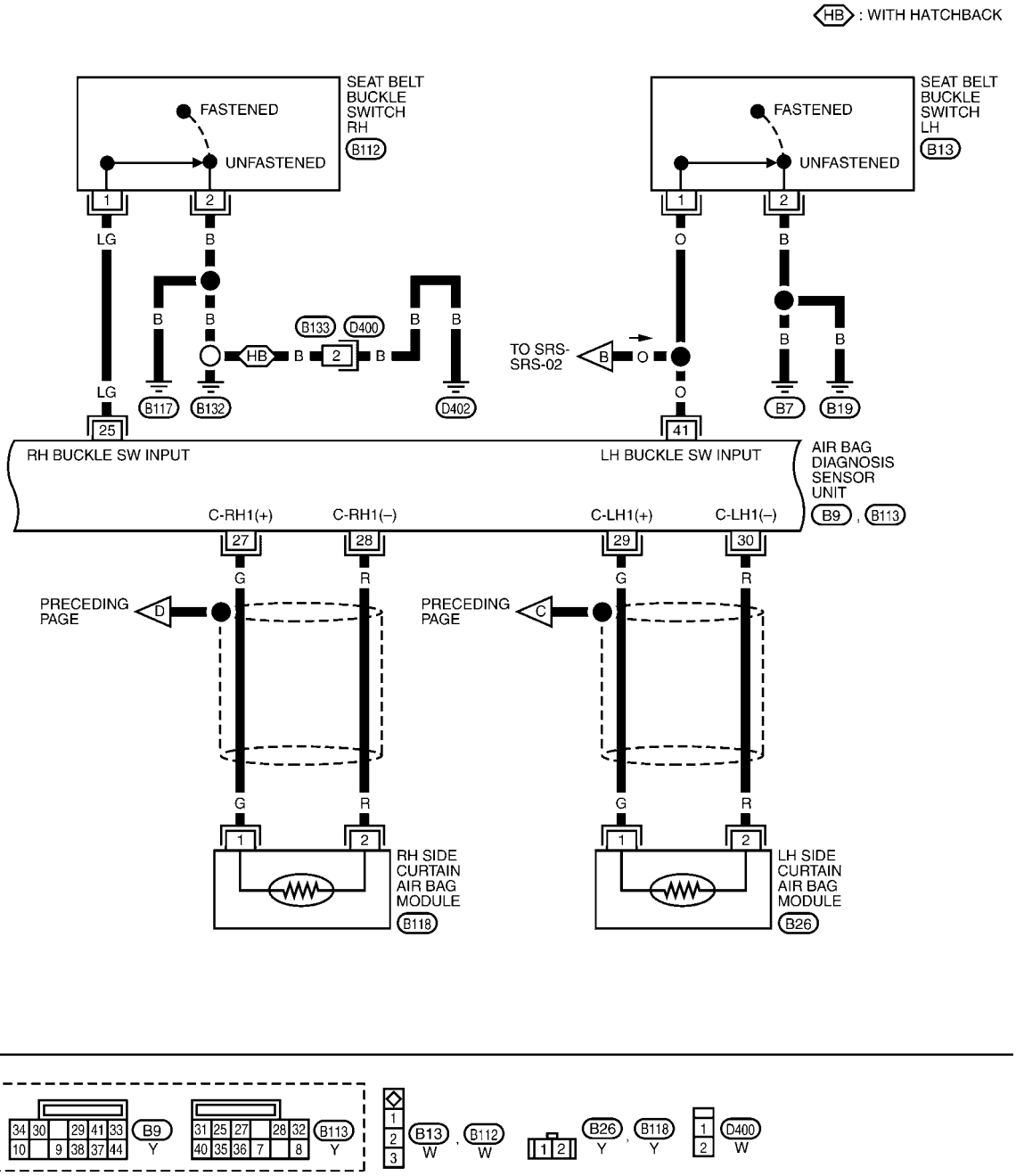

WHWA0348E

SRS-SRS-05

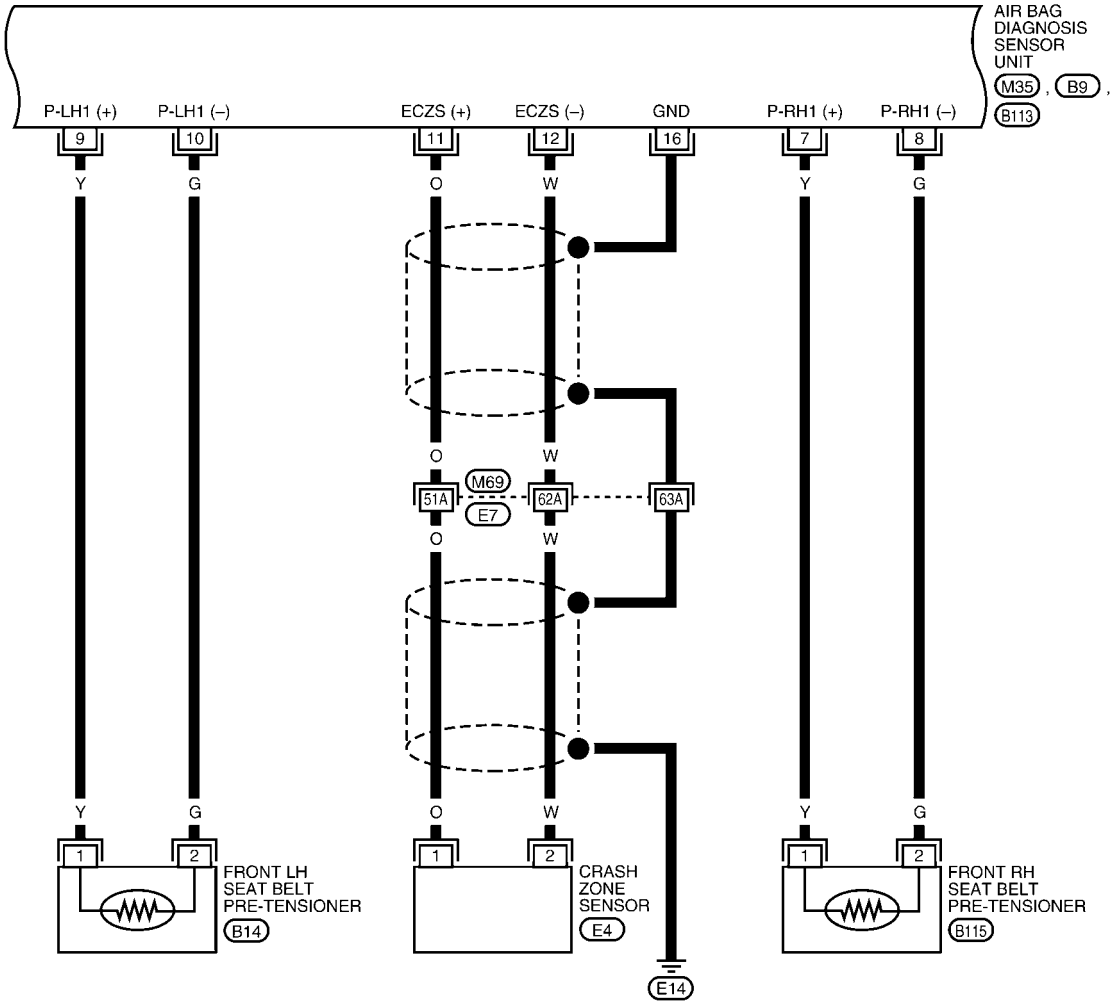

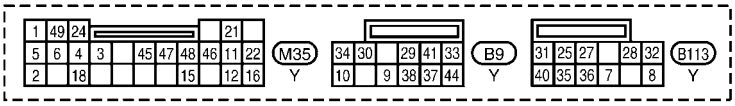

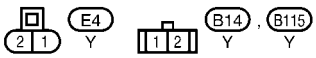

REFER TO THE FOLLOWING.
M69 - SUPER MULTIPLE JUNCTION (SMJ)

WHWA0301E

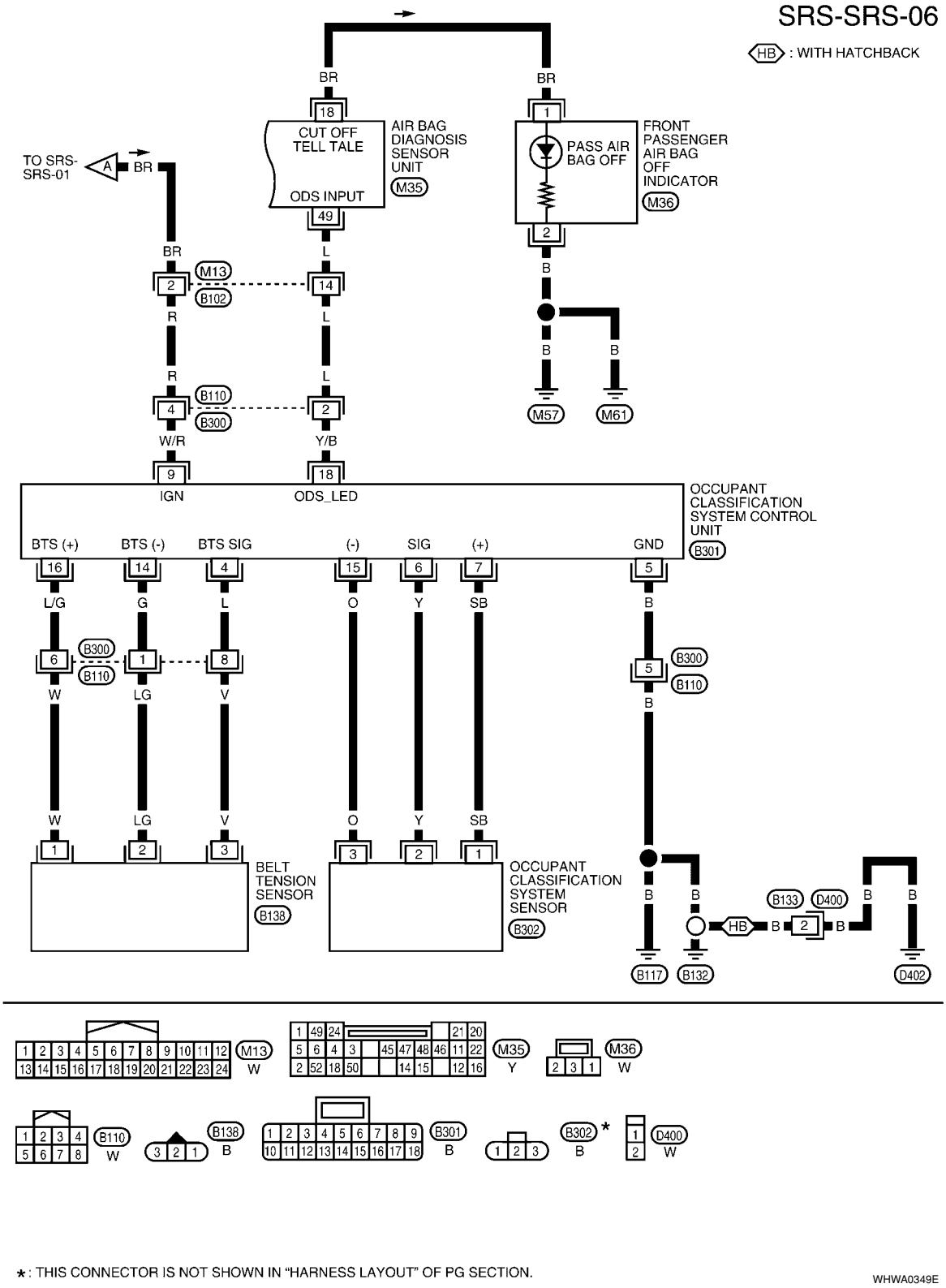

CONSULT-III Function (AIR BAG)

INFOID:0000000001703919

CONSULT-III can display each diagnostic item using the diagnostic test modes shown following.

AIR BAG diagnostic mode	Description
SELF-DIAG [CURRENT]	A current Self-diagnosis result is displayed on the CONSULT-III screen in real time. This refers to a malfunctioning part requiring replacement.
SELF-DIAG [PAST]	Diagnosis results previously stored in the memory are displayed on the CONSULT-III screen. The stored results will remain until the memory is erased.
TROUBLE DIAG RECORD	With TROUBLE DIAG RECORD, diagnosis results previously erased by a reset operation can be displayed on the CONSULT-III screen.
ECU DISCRIMINATED NO.	The air bag diagnosis sensor unit for each vehicle model is assigned with its own, individual classification number. This number will be displayed on the CONSULT-III screen, as shown. When replacing the air bag diagnosis sensor unit, refer to the part number for the compatibility. After installation, replacement with a correct unit can be checked by confirming this classification number on the CONSULT-III screen. **The air bag diagnosis sensor unit discriminated number assigned is F636.**
PASSENGER AIR BAG	The STATUS (readiness) of the front passenger air bag module is displayed. The STATUS displayed (ON/OFF) depends on the signals supplied to the occupant classification system control module and air bag diagnosis sensor unit. Refer to SRS-5, "Occupant Classification System (OCS)" for more information.

HOW TO CHANGE BETWEEN SELF-DIAGNOSIS MODE AND USER MODE WITH CONSULT-III

From User Mode to Diagnosis Mode
After selecting “AIR BAG” on the “SELECT SYSTEM” screen, User mode automatically changes to Diagnosis mode.

From Diagnosis Mode to User Mode
To return to User mode from Diagnosis mode, touch “BACK” key of CONSULT-III until “SELECT SYSTEM” appears, Diagnosis mode automatically changes to User mode.

HOW TO ERASE SELF-DIAGNOSIS RESULTS

NOTE:
If the memory in “SELF-DIAG [PAST]” is not erased, User mode will continue to show the system malfunction by the operation of the warning lamp even if the malfunction is repaired completely.

- “SELF-DIAG [CURRENT]”
  A current self-diagnosis result is displayed on the CONSULT-III screen in real time. After the malfunction is repaired completely, no malfunction is detected on “SELF-DIAG [CURRENT]”.
- “SELF-DIAG [PAST]”
  Return to the “SELF-DIAG [CURRENT]” CONSULT-III screen by touching “BACK” key of CONSULT-III and select “SELF-DIAG [CURRENT]” in SELECT DIAG MODE. Touch “ERASE” in “SELF-DIAG [CURRENT]” mode.
- “TROUBLE DIAG RECORD”
  The memory of “TROUBLE DIAG RECORD” cannot be erased.

Self-Diagnosis Function (Without CONSULT-III)

INFOID:0000000001703920

The reading of these results is accomplished using one of two modes —“User mode” and “Diagnosis mode”.

HOW TO CHANGE BETWEEN USER MODE AND SELF-DIAGNOSIS MODE WITHOUT CONSULT-

III

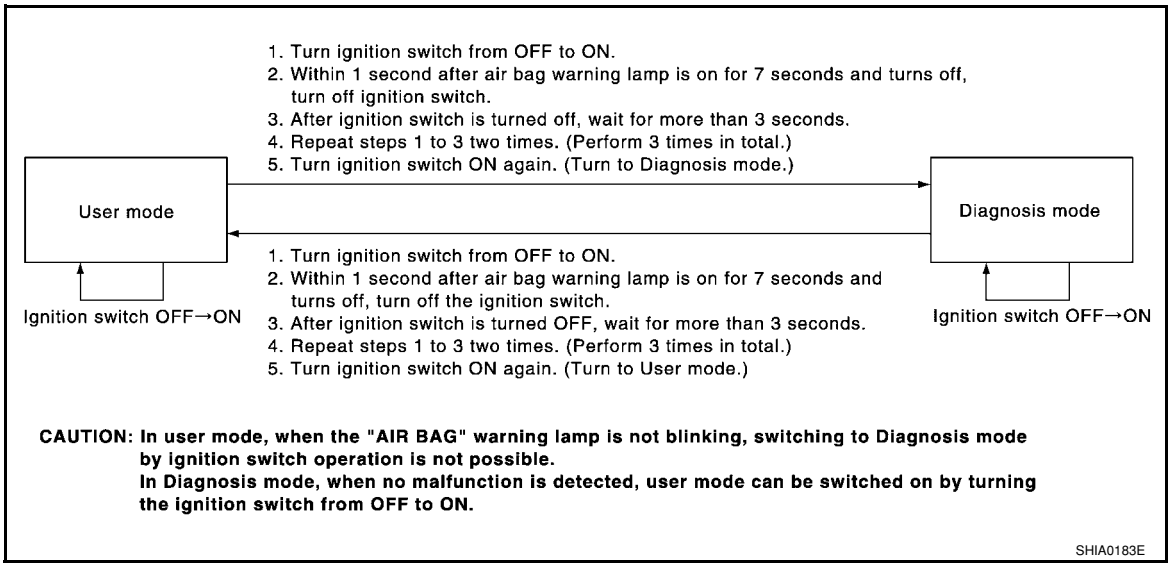

HOW TO ERASE SELF-DIAGNOSIS RESULTS

After a malfunction is repaired, turn the ignition switch OFF for at least one second, then back ON. Diagnosis mode returns to the User mode. At that time, the self-diagnostic result is cleared.

SRS Operation Check

INFOID:0000000001703921

DIAGNOSTIC PROCEDURE 1

Checking SRS Operation Using “AIR BAG” Warning Lamp—User Mode

1. Turn the ignition switch from OFF to ON, and check that the air bag warning lamp blinks.
2. Compare the SRS air bag warning lamp blinking pattern with the examples.

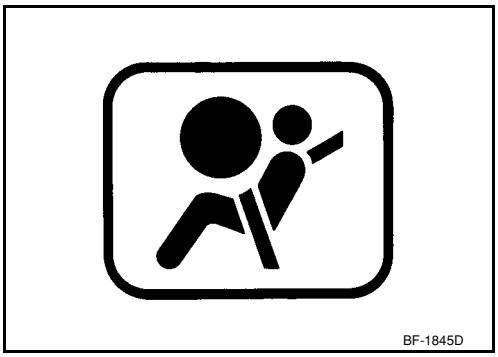

Air bag warning lamp examples

"AIR BAG" warning lamp operation-User mode-	SRS condition	Reference item
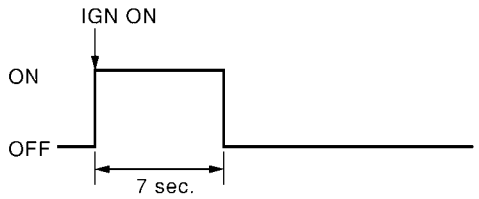 SHIA0011E	• No malfunction is detected. • No further action is necessary.	—
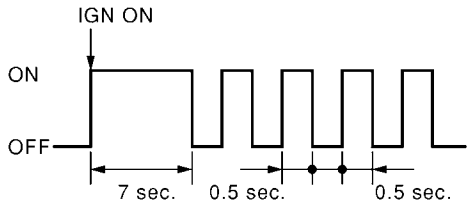 SHIA0012E	• The system is malfunctioning and needs to be repaired as indicated.	Go to SRS-19, "Trouble Diagnosis with CONSULT-III" with CONSULT-III or SRS-27, "Trouble Diagnosis without CONSULT-III" without CONSULT-III.
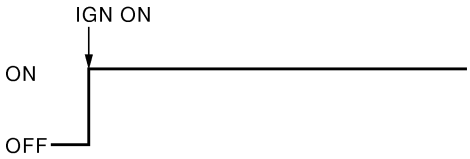 SHIA0013E	• Air bag is deployed. • Seat belt pre-tensioner is deployed.	Go to SRS-46.
	• Air bag diagnosis sensor unit is malfunctioning. • Air bag power supply circuit is malfunctioning. • Air bag warning lamp circuit is malfunctioning.	Go to SRS-30, "Trouble Diagnosis: "AIR BAG" Warning Lamp Does Not Turn Off".
 SHIA0014E	• Air bag diagnosis sensor unit is malfunctioning. • Air bag warning lamp circuit is malfunctioning.	Go to SRS-31, "Trouble Diagnosis: "AIR BAG" Warning Lamp Does Not Turn On".

Trouble Diagnosis with CONSULT-III

INFOID:0000000001703922

DIAGNOSTIC PROCEDURE 2

Diagnostic code is displayed on "SELF-DIAG [CURRENT]".
If no malfunction is detected on "SELF-DIAG [CURRENT]", but malfunction is detected in "SRS Operation Check", the following cases may exist:
- "SELF-DIAG [PAST]" memory might not be erased.
- The SRS system malfunctions intermittently.

Refer to "DIAGNOSTIC PROCEDURE 4"

CONSULT-III Diagnostic Code Chart ("SELF-DIAG [CURRENT]")

Diagnostic item	Explanation		Repair order Recheck SRS at each replacement
NO DTC IS DETECTED	Malfunction is indicated by the “AIR BAG” warning lamp in User mode.	Low battery voltage (Less than 9V)	1. Go to SC-4 2. Go to "DIAGNOSTIC PROCEDURE 3" .
		“SELF-DIAG [PAST]” memory might not be erased.	Go to "DIAGNOSTIC PROCEDURE 4" .
		Intermittent malfunction has been detected in the past.	Go to "DIAGNOSTIC PROCEDURE 5" .
	No malfunction is detected in User mode.		—
DRIVER AIRBAG MODULE [OPEN] [B1049] or [B1054]	Driver air bag module circuit is open (including the spiral cable).		1. Visually check the wiring harness connection. 2. Replace the harness if it has visible damage. 3. Replace driver air bag module. 4. Replace the spiral cable. 5. Replace the air bag diagnosis sensor unit. 6. Replace the related harness.
DRIVER AIRBAG MODULE [VB-SHORT] [B1050] or [B1055]	Driver air bag module circuit is shorted to some power supply circuit (including the spiral cable).		
DRIVER AIRBAG MODULE [GND-SHORT] [B1051] or [B1056]	Driver air bag module circuit is shorted to ground (including the spiral cable).		
DRIVER AIRBAG MODULE [SHORT] [B1052] or [B1057]	Driver air bag module circuits are shorted to each other.		
ASSIST A/B MODULE [OPEN] [B1065] or [B1070]	Front passenger air bag module circuit is open.		1. Visually check the wiring harness connection. 2. Replace the harness if it has visible damage. 3. Replace front passenger air bag module. 4. Replace the air bag diagnosis sensor unit. 5. Replace the related harness.
ASSIST A/B MODULE [VB-SHORT] [B1066] or [B1071]	Front passenger air bag module circuit is shorted to some power supply circuit.		
ASSIST A/B MODULE [GND-SHORT] [B1067] or [B1072]	Front passenger air bag module circuit is shorted to ground.		
ASSIST A/B MODULE [SHORT] [B1068] or [B1073]	Front passenger air bag module circuits are shorted to each other.		
CRASH ZONE SEN [UNIT FAIL] [B1033] or [B1034] CRASH ZONE SEN [COMM FAIL] [B1035]	Crash zone sensor		1. Visually check the wiring harness connection. 2. Replace the harness if it has visible damage. 3. Replace the crash zone sensor. 4. Replace the air bag diagnosis sensor unit. 5. Replace the related harness.
SIDE MODULE LH [OPEN] [B1134]	Front LH side air bag module circuit is open.		1. Visually check the wiring harness connection. 2. Replace the harness if it has visible damage. 3. Replace front LH seat back assembly (front LH side air bag module). 4. Replace the air bag diagnosis sensor unit. 5. Replace the related harness.
SIDE MODULE LH [VB-SHORT] [B1135]	Front LH side air bag module circuit is shorted to some power supply circuit.		
SIDE MODULE LH [GND-SHORT] [B1136]	Front LH side air bag module circuit is shorted to ground.		
SIDE MODULE LH [SHORT] [B1137]	Front LH side air bag module circuits are shorted to each other.		

Diagnostic item	Explanation	Repair order Recheck SRS at each replacement
SIDE MODULE RH [OPEN] [B1129]	Front RH side air bag module circuit is open.	1. Visually check the wiring harness connection. 2. Replace the harness if it has visible damage. 3. Replace front RH seat back assembly (front RH side air bag module). 4. Replace the air bag diagnosis sensor unit. 5. Replace the related harness.
SIDE MODULE RH [VB-SHORT] [B1130]	Front RH side air bag module circuit is shorted to some power supply circuit.	
SIDE MODULE RH [GND-SHORT] [B1131]	Front RH side air bag module circuit is shorted to ground.	
SIDE MODULE RH [SHORT] [B1132]	Front RH side air bag module circuits are shorted to each other.	
SATELLITE SENS LH [UNIT FAIL] [B1118] or [B1119] SATELLITE SENS LH [COMM FAIL] [B1120]	LH side air bag (satellite) sensor	1. Visually check the wiring harness connection. 2. Replace the harness if it has visible damage. 3. Replace the LH side air bag (satellite) sensor. 4. Replace the air bag diagnosis sensor unit. 5. Replace the related harness.
SATELLITE SENS RH [UNIT FAIL] [B1113] or [B1114] SATELLITE SENS RH [COMM FAIL] [B1115]	RH side air bag (satellite) sensor	1. Visually check the wiring harness connection. 2. Replace the harness if it has visible damage. 3. Replace the RH side air bag (satellite) sensor. 4. Replace the air bag diagnosis sensor unit. 5. Replace the related harness.
PRE-TEN FRONT LH [OPEN] [B1086]	The circuit for front LH seat belt pre-tensioner is open.	1. Visually check the wiring harness connections. 2. Replace the harness if it has visible damage. 3. Replace front LH seat belt pre-tensioner. 4. Replace the air bag diagnosis sensor unit. 5. Replace the related harness.
PRE-TEN FRONT LH [VB-SHORT] [B1087]	The circuit for front LH seat belt pre-tensioner is shorted to some power supply circuit.	
PRE-TEN FRONT LH [GND-SHORT] [B1088]	The circuit for front LH seat belt pre-tensioner is shorted to ground.	
PRE-TEN FRONT LH [SHORT] [B1089]	The circuits for the front LH seat belt pre-tensioner are shorted to each other.	
PRE-TEN FRONT RH [OPEN] [B1081]	The circuit for front RH seat belt pre-tensioner is open.	1. Visually check the wiring harness connections. 2. Replace the harness if it has visible damage. 3. Replace front RH seat belt pre-tensioner. 4. Replace the air bag diagnosis sensor unit. 5. Replace the related harness.
PRE-TEN FRONT RH [VB-SHORT] [B1082]	The circuit for front RH seat belt pre-tensioner is shorted to some power supply circuit.	
PRE-TEN FRONT RH [GND-SHORT] [B1083]	The circuit for front RH seat belt pre-tensioner is shorted to ground.	
PRE-TEN FRONT RH [SHORT] [B1084]	The circuits for the front RH seat belt pre-tensioner are shorted to each other.	

Diagnostic item	Explanation	Repair order Recheck SRS at each replacement
CURTAIN MODULE LH [OPEN] [B1150]	The LH side curtain air bag module circuit is open.	1. Visually check the wiring harness connection. 2. Replace the harness if it has visible damage. 3. Replace LH side curtain air bag module. 4. Replace the air bag diagnosis sensor unit. 5. Replace the related harness.
CURTAIN MODULE LH [VB-SHORT] [B1151]	The LH side curtain air bag module circuit is shorted to some power supply circuits.	
CURTAIN MODULE LH [GND-SHORT] [B1152]	The LH side curtain air bag module circuit is shorted to ground.	
CURTAIN MODULE LH [SHORT] [B1153]	The circuits for the LH side curtain air bag module are shorted to each other.	
CURTAIN MODULE RH [OPEN] [B1145]	The RH side curtain air bag module circuit is open.	1. Visually check the wiring harness connection. 2. Replace the harness if it has visible damage. 3. Replace RH side curtain air bag module. 4. Replace the air bag diagnosis sensor unit. 5. Replace the related harness.
CURTAIN MODULE RH [VB-SHORT] [B1146]	The RH side curtain air bag module circuit is shorted to some power supply circuits.	
CURTAIN MODULE RH [GND-SHORT] [B1147]	The RH side curtain air bag module circuit is shorted to ground.	
CURTAIN MODULE RH [SHORT] [B1148]	The circuits for the RH side curtain air bag module are shorted to each other.	
CONTROL UNIT [B1XXX]	Air bag diagnosis sensor unit is malfunctioning.	1. Visually check the wiring harness connection. 2. Replace the air bag diagnosis sensor unit.
OCCUPANT SENS C/U [UNIT FAIL] [B1017], [B1020] or [B1021]	Occupant classification system is malfunctioning.	1. Replace RH front seat cushion/ occupant classification system control unit assembly.
OCCUPANT SENS C/U [COMM FAIL] [B1022]	Communication between the occupant classification system control unit and air bag diagnosis sensor unit is interrupted.	1. Visually check the wiring harness connection. 2. Replace the harness if it has visible damage. 3. Replace RH front seat cushion/ occupant classification system control unit assembly. 4. Replace the air bag diagnosis sensor unit. 5. Replace the related harness.
OCCUPANT SENS [UNIT FAIL] [B1018]	Occupant classification sensor is malfunctioning.	1. Replace RH front seat cushion/ occupant classification system control unit assembly.
BELT TENSION SENS [UNIT FAIL] [B1019]	Belt tension sensor is malfunctioning.	1. Visually check the wiring harness connection. 2. Replace the harness if it has visible damage. 3. Replace RH front seat belt assembly. 4. Replace RH front seat cushion/ occupant classification system control unit assembly.

Diagnostic item	Explanation	Repair order Recheck SRS at each replacement
PASS A/B INDCTR CKT [B1023]	Front passenger air bag off indicator is malfunctioning.	1. Visually check the wiring harness connection. 2. Replace the harness if it has visible damage. 3. Replace front passenger air bag off indicator. 4. Replace the air bag diagnosis sensor unit. 5. Replace the related harness.
FRONTAL COLLISION DETECTION [B1209]	Driver and front passenger air bag modules are deployed.	Refer to SRS-46.
SIDE COLLISION DETECTION [B1210]	Side or curtain air bag modules are deployed.	

NOTE:
Follow the procedures in numerical order when performing repairs. Confirm whether the repair has been successful using air bag warning lamp or CONSULT-III after each repair. If malfunction is still observed, proceed to the next step. When malfunction has been eliminated, further repair work is not required.

DIAGNOSTIC PROCEDURE 3

Final Check of SRS Using CONSULT-III—Diagnosis Mode

1. If no DTC is detected on “SELF-DIAG [CURRENT]”, repair of SRS is completed. Go to step 2.
   If any DTC is detected on “SELF-DIAG [CURRENT]”, the malfunctioning part has not been repaired completely or another malfunctioning part is being detected. Go to "DIAGNOSTIC PROCEDURE 2".
2. Touch “ERASE”.
   NOTE:
   Touch “ERASE” to clear the memory of the malfunction (“SELF-DIAG [PAST]”).
   If the memory of the malfunction in “SELF-DIAG [PAST]” is not erased, the User mode shows the system malfunction by the operation of the warning lamp even if the malfunction is repaired completely.
3. Touch “BACK” key of CONSULT-III to “SELECT DIAG MODE” screen. Touch “SELF-DIAG [PAST]”.
4. Check that no malfunction is detected on “SELF-DIAG [PAST]”.
5. Touch “BACK” key of CONSULT-III until “SELECT SYSTEM” appears in order to return to User mode from Diagnosis mode.
6. Turn ignition switch OFF then turn off and disconnect CONSULT-III.
7. Go to SRS-18, "SRS Operation Check".

DIAGNOSTIC PROCEDURE 4

Check SRS Repair History

1. CONSIDER POSSIBILITY THAT SELF-DIAGNOSTIC RESULT WAS NOT ERASED AFTER REPAIR

Check repair history of the SRS.

Have any previous repairs been made to the SRS?

Yes >> Self-diagnostic result “SELF-DIAG [PAST]” (previously stored in the memory) might not be erased after repair. Go to "DIAGNOSTIC PROCEDURE 3".

No >> Go to "DIAGNOSTIC PROCEDURE 2".

DIAGNOSTIC PROCEDURE 5

Check SRS Intermittent Malfunction Using CONSULT-III—Diagnosis Mode

1. If diagnostic codes are displayed on “SELF-DIAG [PAST]”, go to step 4.
   If no malfunction is detected on “SELF-DIAG [PAST]”, touch “BACK” and go back to “SELECT DIAG MODE”.

2. Touch “TROUBLE DIAG RECORD”.
   NOTE:
   With “TROUBLE DIAG RECORD”, diagnosis results previously erased by a reset operation can be displayed.
3. Diagnostic code is displayed on “TROUBLE DIAG RECORD”.
4. Touch “PRINT”.
5. Compare diagnostic codes to "CONSULT-III Diagnostic Code Chart ("SELF-DIAG [PAST]" or "TROUBLE DIAG RECORD")".
6. Touch “BACK” key of CONSULT-III until “SELECT SYSTEM” appears.
7. Turn ignition switch OFF, then turn off and disconnect CONSULT-III, and both battery cables.
8. Repair the system as outlined by the “Repair order” in “Intermittent Malfunction Diagnostic Code Chart”, that corresponds to the self-diagnostic result. For replacement procedure of component parts, refer to the Removal and Installation procedure for the appropriate component.
9. Go to "DIAGNOSTIC PROCEDURE 3", for final checking.

CONSULT-III Diagnostic Code Chart ("SELF-DIAG [PAST]" or "TROUBLE DIAG RECORD")

Diagnostic item	Explanation		Repair order Recheck SRS at each replacement
NO DTC IS DETECTED	When malfunction is indicated by the “AIR BAG” warning lamp in User mode.	• Low battery voltage (Less than 9V)	• Go to "DIAGNOSTIC PROCEDURE 3" .
		• Self-diagnostic result “SELF-DIAG [PAST]” (previously stored in the memory) might not be erased after repair. • Intermittent malfunction has been detected in the past.	• Go to "DIAGNOSTIC PROCEDURE 4" . • Go to "DIAGNOSTIC PROCEDURE 5" .
	• No malfunction is detected.		—
DRIVER AIRBAG MODULE [OPEN] [B1049] or [B1054]	Driver air bag module circuit is open (including the spiral cable).		1. Visually check the wiring harness connection. 2. Replace the harness if it has visible damage. 3. Replace driver air bag module. 4. Replace the spiral cable. 5. Replace the air bag diagnosis sensor unit. 6. Replace the related harness.
DRIVER AIRBAG MODULE [VB-SHORT] [B1050] or [B1055]	Driver air bag module circuit is shorted to some power supply circuit (including the spiral cable).		
DRIVER AIRBAG MODULE [GND-SHORT] [B1051] or [B1056]	Driver air bag module circuit is shorted to ground (including the spiral cable).		
DRIVER AIRBAG MODULE [SHORT] [B1052] or [B1057]	Driver air bag module circuits are shorted to each other.		
ASSIST A/B MODULE [OPEN] [B1065] or [B1070]	Front passenger air bag module circuit is open.		1. Visually check the wiring harness connection. 2. Replace the harness if it has visible damage. 3. Replace front passenger air bag module. 4. Replace the air bag diagnosis sensor unit. 5. Replace the related harness.
ASSIST A/B MODULE [VB-SHORT] [B1066] or [B1071]	Front passenger air bag module circuit is shorted to some power supply circuit.		
ASSIST A/B MODULE [GND-SHORT] [B1067] or [B1072]	Front passenger air bag module circuit is shorted to ground.		
ASSIST A/B MODULE [SHORT] [B1068] or [B1073]	Front passenger air bag module circuits are shorted to each other.		

Diagnostic item	Explanation	Repair order Recheck SRS at each replacement
CRASH ZONE SEN [UNIT FAIL] [B1033] or [B1034] CRASH ZONE SEN [COMM FAIL] [B1035]	Crash zone sensor	1. Visually check the wiring harness connection. 2. Replace the harness if it has visible damage. 3. Replace the crash zone sensor. 4. Replace the air bag diagnosis sensor unit. 5. Replace the related harness.
SIDE MODULE LH [OPEN] [B1134]	Front LH side air bag module circuit is open.	1. Visually check the wiring harness connection. 2. Replace the harness if it has visible damage. 3. Replace front LH seat back assembly (front LH side air bag module). 4. Replace the air bag diagnosis sensor unit. 5. Replace the related harness.
SIDE MODULE LH [VB-SHORT] [B1135]	Front LH side air bag module circuit is shorted to some power supply circuit.	
SIDE MODULE LH [GND-SHORT] [B1136]	Front LH side air bag module circuit is shorted to ground.	
SIDE MODULE LH [SHORT] [B1137]	Front LH side air bag module circuits are shorted to each other.	
SIDE MODULE RH [OPEN] [B1129]	Front RH side air bag module circuit is open.	1. Visually check the wiring harness connection. 2. Replace the harness if it has visible damage. 3. Replace front RH seat back assembly (front RH side air bag module). 4. Replace the air bag diagnosis sensor unit. 5. Replace the related harness.
SIDE MODULE RH [VB-SHORT] [B1130]	Front RH side air bag module circuit is shorted to some power supply circuit.	
SIDE MODULE RH [GND-SHORT] [B1131]	Front RH side air bag module circuit is shorted to ground.	
SIDE MODULE RH [SHORT] [B1132]	Front RH side air bag module circuits are shorted to each other.	
SATELLITE SENS LH [UNIT FAIL] [B1118] or [B1119] SATELLITE SENS LH [COMM FAIL] [B1120]	LH side air bag (satellite) sensor	1. Visually check the wiring harness connection. 2. Replace the harness if it has visible damage. 3. Replace the LH side air bag (satellite) sensor. 4. Replace the air bag diagnosis sensor unit. 5. Replace the related harness.
SATELLITE SENS RH [UNIT FAIL] [B1113] or [B1114] SATELLITE SENS RH [COMM FAIL] [B1115]	RH side air bag (satellite) sensor	1. Visually check the wiring harness connection. 2. Replace the harness if it has visible damage. 3. Replace the RH side air bag (satellite) sensor. 4. Replace the air bag diagnosis sensor unit. 5. Replace the related harness.

Diagnostic item	Explanation	Repair order Recheck SRS at each replacement
PRE-TEN FRONT LH [OPEN] [B1086]	The circuit for front LH seat belt pre-tensioner is open.	1. Visually check the wiring harness connections. 2. Replace the harness if it has visible damage. 3. Replace front LH seat belt pre-tensioner. 4. Replace the air bag diagnosis sensor unit. 5. Replace the related harness.
PRE-TEN FRONT LH [VB-SHORT] [B1087]	The circuit for front LH seat belt pre-tensioner is shorted to some power supply circuit.	
PRE-TEN FRONT LH [GND-SHORT] [B1088]	The circuit for front LH seat belt pre-tensioner is shorted to ground.	
PRE-TEN FRONT LH [SHORT] [B1089]	The circuits for the front LH seat belt pre-tensioner are shorted to each other.	
PRE-TEN FRONT RH [OPEN] [B1081]	The circuit for front RH seat belt pre-tensioner is open.	1. Visually check the wiring harness connections. 2. Replace the harness if it has visible damage. 3. Replace front RH seat belt pre-tensioner. 4. Replace the air bag diagnosis sensor unit. 5. Replace the related harness.
PRE-TEN FRONT RH [VB-SHORT] [B1082]	The circuit for front RH seat belt pre-tensioner is shorted to some power supply circuit.	
PRE-TEN FRONT RH [GND-SHORT] [B1083]	The circuit for front RH seat belt pre-tensioner is shorted to ground.	
PRE-TEN FRONT RH [SHORT] [B1084]	The circuits for the front RH seat belt pre-tensioner are shorted to each other.	
CURTAIN MODULE LH [OPEN] [B1150]	The LH side curtain air bag module circuit is open.	1. Visually check the wiring harness connection. 2. Replace the harness if it has visible damage. 3. Replace LH side curtain air bag module. 4. Replace the air bag diagnosis sensor unit. 5. Replace the related harness.
CURTAIN MODULE LH [VB-SHORT] [B1151]	The LH side curtain air bag module circuit is shorted to some power supply circuits.	
CURTAIN MODULE LH [GND-SHORT] [B1152]	The LH side curtain air bag module circuit is shorted to ground.	
CURTAIN MODULE LH [SHORT] [B1153]	The circuits for the LH side curtain air bag module are shorted to each other.	
CURTAIN MODULE RH [OPEN] [B1145]	The RH side curtain air bag module circuit is open.	1. Visually check the wiring harness connection. 2. Replace the harness if it has visible damage. 3. Replace RH side curtain air bag module. 4. Replace the air bag diagnosis sensor unit. 5. Replace the related harness.
CURTAIN MODULE RH [VB-SHORT] [B1146]	The RH side curtain air bag module circuit is shorted to some power supply circuits.	
CURTAIN MODULE RH [GND-SHORT] [B1147]	The RH side curtain air bag module circuit is shorted to ground.	
CURTAIN MODULE RH [SHORT] [B1148]	The circuits for the RH side curtain air bag module are shorted to each other.	
CONTROL UNIT [B1XXX]	Air bag diagnosis sensor unit is malfunctioning.	1. Visually check the wiring harness connection. 2. Replace the air bag diagnosis sensor unit.
OCCUPANT SENS C/U [UNIT FAIL] [B1017], [B1020] or [B1021]	Occupant classification system is malfunctioning.	1. Replace RH front seat cushion/ occupant classification system control unit assembly.

Diagnostic item	Explanation	Repair order Recheck SRS at each replacement
OCCUPANT SENS C/U [COMM FAIL] [B1022]	Communication between the occupant classification system control unit and air bag diagnosis sensor unit is interrupted.	1. Visually check the wiring harness connection. 2. Replace the harness if it has visible damage. 3. Replace RH front seat cushion/ occupant classification system control unit assembly. 4. Replace the air bag diagnosis sensor unit. 5. Replace the related harness.
OCCUPANT SENS [UNIT FAIL] [B1018]	Occupant classification sensor is malfunctioning.	1. Replace RH front seat cushion/ occupant classification system control unit assembly.
BELT TENSION SENS [UNIT FAIL] [B1019]	Belt tension sensor is malfunctioning.	1. Visually check the wiring harness connection. 2. Replace the harness if it has visible damage. 3. Replace RH front seat belt assembly. 4. Replace RH front seat cushion/ occupant classification system control unit assembly.
PASS A/B INDCTR CKT [B1023]	Front passenger air bag off indicator is malfunctioning.	1. Visually check the wiring harness connection. 2. Replace the harness if it has visible damage. 3. Replace front passenger air bag off indicator. 4. Replace the air bag diagnosis sensor unit. 5. Replace the related harness.
FRONTAL COLLISION DETECTION [B1209]	Driver and front passenger air bag modules are deployed.	Refer to SRS-46.
SIDE COLLISION DETECTION [B1210]	Side or curtain air bag modules are deployed.	

NOTE:
Follow the procedures in numerical order when performing repairs. Confirm whether the repair has been successful using air bag warning lamp or CONSULT-III after each repair. If malfunction is still observed, proceed to the next step. When malfunction has been eliminated, further repair work is not required.

Trouble Diagnosis without CONSULT-III

INFOID:0000000001703923

DIAGNOSTIC PROCEDURE 6

Inspect SRS Malfunction Using "AIR BAG" Warning Lamp—Diagnosis Mode

NOTE:
SRS will not enter Diagnosis mode if no malfunction is detected in User mode.

1. Turn ignition switch ON.
2. After “AIR BAG” warning lamp lights for 7 seconds, turn ignition switch OFF within 1 second.
3. Wait more than 3 seconds.
4. Repeat steps 1 to 3 two times.
5. Turn ignition switch ON.

SRS is now in Diagnosis mode.
"AIR BAG" warning lamp operates in Diagnosis mode according to the Warning Lamp Flash Code Chart:

WARNING LAMP FLASH CODE CHART

<Diagnosis results (previously stored in the memory) might not be erased after repair or intermittent malfunctions have been detected in the past.>

Flash pattern	Repair order
a through b are repeated. 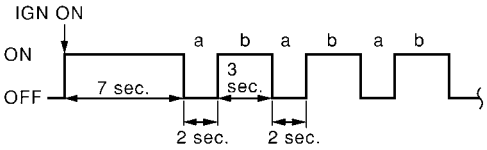 	1. Go to DIAGNOSTIC PROCEDURES 2 and 3.

SHIA0026E

<Driver air bag module>

Flash pattern	Repair order
a through d are repeated. d: Two flashes indicate malfunctioning driver air bag module circuits. 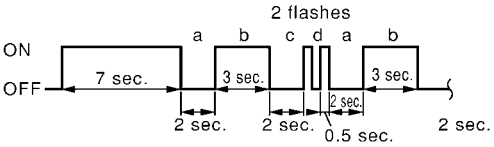 	1. Visually check the wiring harness connection. 2. Replace the harness if it has visible damage. 3. Replace the spiral cable. 4. Replace driver air bag module. 5. Replace the air bag diagnosis sensor unit. 6. Replace the related harness.

WHIA0260E

<Air bag diagnosis sensor unit>

Flash pattern	Repair order
a through d are repeated. d: Seven flashes indicate malfunctioning diagnosis sensor unit circuit. 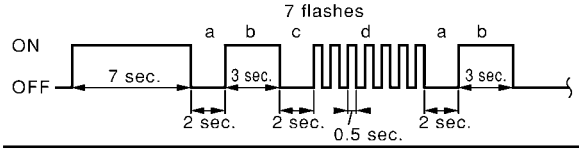 	1. Visually check the wiring harness connections. 2. Replace the harness if it has visible damage. 3. Replace the air bag diagnosis sensor unit. 4. Replace the related harness.

WHIA0198E

<Front passenger air bag module>

Flash pattern	Repair order
a through d are repeated. d: Eight flashes indicate malfunctioning front passenger air bag module circuit. 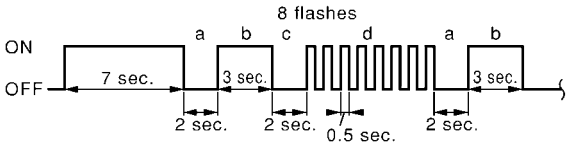 	1. Visually check the wiring harness connection. 2. Replace the harness if it has visible damage. 3. Replace front passenger air bag module. 4. Replace the air bag diagnosis sensor unit. 5. Replace the related harness.

WHIA0261E

<Crash zone sensor>

Flash pattern	Repair order
a through d are repeated. d: Six flashes indicate malfunctioning crash zone sensor circuit. 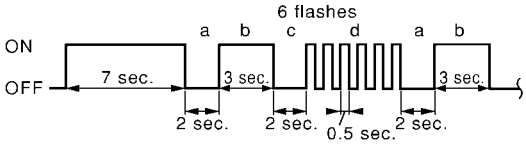 	1. Visually check the wiring harness connection. 2. Replace the harness if it has visible damage. 3. Replace the crash zone sensor. 4. Replace the air bag diagnosis sensor unit. 5. Replace the related harness.

WHIA0200E

<Front RH seat belt pre-tensioner>

Flash pattern	Repair order
a through d are repeated. d: One flash indicates malfunctioning front RH seat belt pre-tensioner circuit. 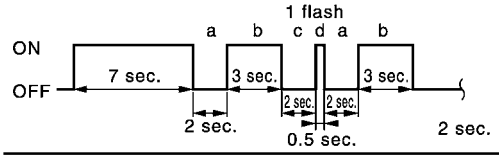 	1. Visually check the wiring harness connections. 2. Replace the harness if it has visible damage. 3. Replace front RH seat belt pre-tensioner. 4. Replace the air bag diagnosis sensor unit. 5. Replace the related harness. WHIA0262E

<Front LH seat belt pre-tensioner>

Flash pattern	Repair order
a through d are repeated. d: Three flashes indicate malfunctioning front LH seat belt pre-tensioner circuit. 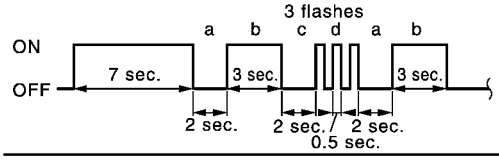 	1. Visually check the wiring harness connections. 2. Replace the harness if it has visible damage. 3. Replace front LH seat belt pre-tensioner. 4. Replace the air bag diagnosis sensor unit. 5. Replace the related harness. WHIA0263E

<RH side air bag (Satellite) sensor>

Flash pattern	Repair order
a through f are repeated. f: Three flashes indicate malfunctioning RH side air bag (Satellite) sensor circuit. 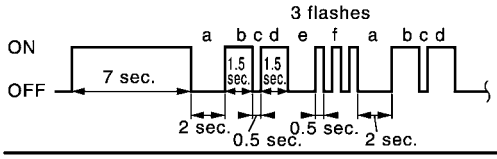 	1. Visually check the wiring harness connection. 2. Replace the harness if it has visible damage. 3. Replace the RH side air bag (Satellite) sensor. 4. Replace the air bag diagnosis sensor unit. 5. Replace the related harness. WHIA0203E

<LH side air bag (Satellite) sensor>

Flash pattern	Repair order
a through f are repeated. f: Four flashes indicate malfunctioning LH side air bag (Satellite) sensor. 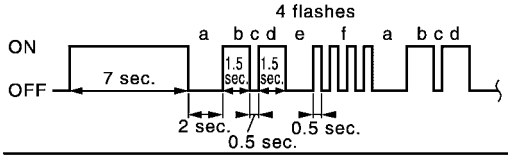 	1. Visually check the wiring harness connection. 2. Replace the harness if it has visible damage. 3. Replace the LH side air bag (Satellite) sensor. 4. Replace the air bag diagnosis sensor unit. 5. Replace the related harness. WHIA0204E

<Front RH side air bag module>

Flash pattern	Repair order
a through f are repeated. f: One flash indicate malfunctioning front RH side air bag module circuit. 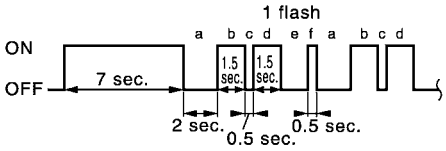 	1. Visually check the wiring harness connection. 2. Replace the harness if it has visible damage. 3. Replace front RH seat back assembly. 4. Replace the air bag diagnosis sensor unit. 5. Replace the related harness. WHIA0264E

<Front LH side air bag module>

Flash pattern	Repair order
a through f are repeated. f: Two flashes indicate malfunctioning front LH side air bag module circuit. 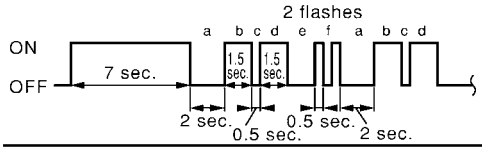 	1. Visually check the wiring harness connection. 2. Replace the harness if it has visible damage. 3. Replace front LH seat back assembly. 4. Replace the air bag diagnosis sensor unit. 5. Replace the related harness.

WHIA0265E

<RH side curtain air bag module>

Flash pattern	Repair order
a through f are repeated. f: Five flashes indicate malfunctioning RH side curtain air bag module circuit. 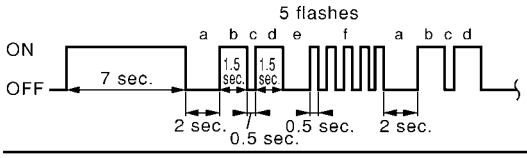 	1. Visually check the wiring harness connection. 2. Replace the harness if it has visible damage. 3. Replace RH side curtain air bag module. 4. Replace the air bag diagnosis sensor unit. 5. Replace the related harness.

WHIA0266E

<LH side curtain air bag module>

Flash pattern	Repair order
a through f are repeated. f: Six flashes indicate malfunctioning LH side curtain air bag module circuit. 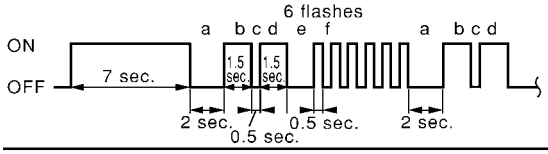 	1. Visually check the wiring harness connection. 2. Replace the harness if it has visible damage. 3. Replace LH side curtain air bag module. 4. Replace the air bag diagnosis sensor unit. 5. Replace the related harness.

WHIA0267E

<Occupant classification system>

Flash pattern	Repair order
a through d are repeated. d: Five flashes indicate malfuntioning occupant classification system control unit. 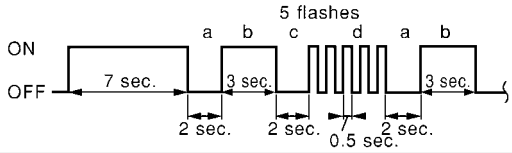 	1. Visually check the wiring harness connection. 2. Replace the harness if it has visible damage. 3. Replace the RH front seat cushion occupant classification system control unit assembly. 4. Replace the air bag diagnosis sensor unit.

WHIA0211E

<Front passenger air bag off indicator>

Flash pattern	Repair order
a through d are repeated. d: Eleven flashes indicate malfunctioning front passenger air bag off indicator. 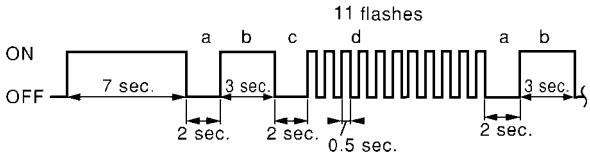 	1. Visually check the wiring harness connection. 2. Replace the harness if it has visible damage. 3. Replace front passenger air bag off indicator. 4. Replace the air bag diagnosis sensor unit. 5. Replace the related harness.

WHIA0212E

Trouble Diagnosis: "AIR BAG" Warning Lamp Does Not Turn Off

INFOID:0000000001703924

DIAGNOSTIC PROCEDURE 7

1. CHECK CONDITION OF AIR BAG MODULE

Inspect for any deployed air bag modules or seat belt pre-tensioners.

Are any air bag modules or seat belt pre-tensioners deployed?

Yes >> Refer to SRS-46.
No >> GO TO 2.

2. CHECK THE AIR BAG FUSE

Check 10A fuse [No. 1, located in the fuse block (J/B)].
Refer to PG-3.

OK or NG

OK >> GO TO 4.
NG >> GO TO 3.

3. CHECK AIR BAG FUSE AGAIN

Replace 10A fuse [No. 1, located in the fuse block (J/B)] and turn ignition switch ON.

Does the fuse blow again?

Yes >> Repair harness.
No >> Inspection End.

4. CHECK AIR BAG DIAGNOSIS SENSOR UNIT

Connect CONSULT-III and touch “START”.

Is “AIR BAG” displayed on CONSULT-III?

Yes >> GO TO 5.
No >> Visually inspect the air bag diagnosis sensor unit harness connections. If the connections are OK, replace the air bag diagnosis sensor unit. Refer to SRS-44, "Removal and Installation".

5. CHECK HARNESS CONNECTION

Check for loose connections between the combination meter and the air bag diagnosis sensor unit.

OK or NG

OK >> Replace air bag diagnosis sensor unit. Refer to SRS-44, "Removal and Installation".
NG >> Properly connect the combination meter and air bag diagnosis sensor unit harness connectors. If “AIR BAG” warning lamp still does not turn off, replace the wiring harness.

Trouble Diagnosis: "AIR BAG" Warning Lamp Does Not Turn On

INFOID:0000000001703925

DIAGNOSTIC PROCEDURE 8

1. CHECK METER FUSE

Check the 10A fuse [No. 13, located in the fuse block (J/B)] .
Refer to PG-3.

OK or NG

OK >> GO TO 3.
NG >> GO TO 2.

2. REPLACE METER FUSE AND CHECK AGAIN

Replace 10A fuse [No. 13, located in the fuse block (J/B)] and turn ignition switch ON.

Does the fuse blow again?

Yes >> Replace harness.
No >> Inspection End.

3. CHECK HARNESS CONNECTIONS BETWEEN AIR BAG DIAGNOSIS SENSOR UNIT AND COMBINATION METER

Inspect the harness and connectors between the air bag diagnosis sensor unit and the combination meter.

Do the harness or connectors have any visible damage?

Yes >> Replace harness.

No >> GO TO 4.

4. CHECK COMBINATION METER

Disconnect the air bag diagnosis sensor unit harness connectors and turn ignition switch ON.

Does “AIR BAG” warning lamp turn on?

Yes >> Replace the air bag diagnosis sensor unit. Refer to SRS-44, "Removal and Installation".
No >> Replace the combination meter. Refer to IP-11, "Removal and Installation".

ON-VEHICLE REPAIR

DRIVER AIR BAG MODULE

Removal and Installation

INFOID:0000000001703926

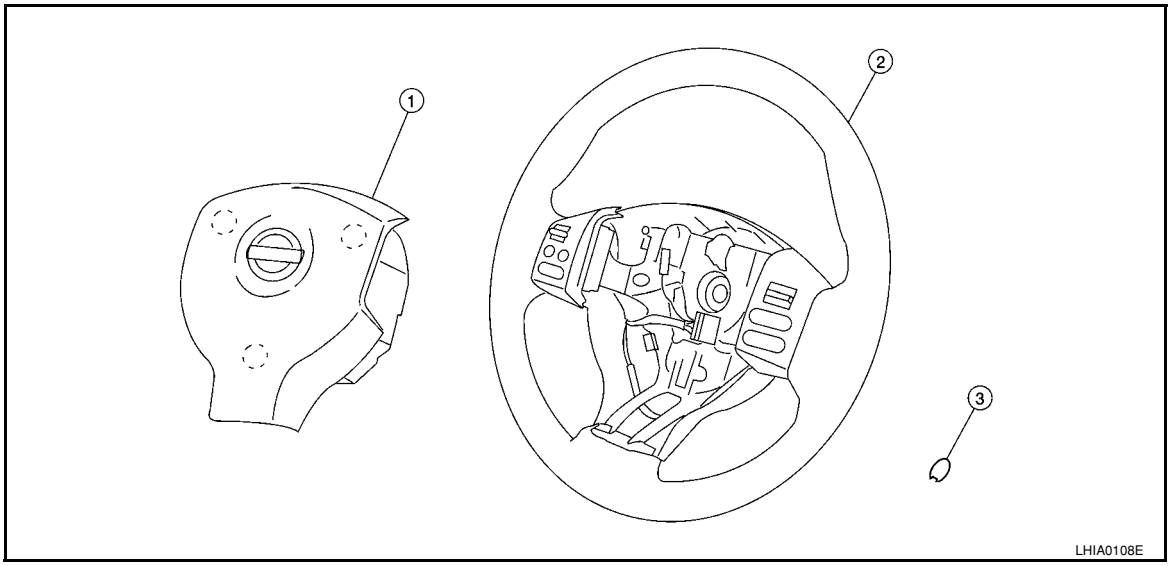

1. Driver air bag module
2. Steering wheel
3. Cover

◌ Pawl

REMOVAL

WARNING:

- **When servicing the SRS, do not work from directly in front of air bag module.**
- **Always place air bag module with pad side facing upward.**

CAUTION:

- **Before servicing the SRS, turn ignition switch OFF, disconnect both battery cables, then wait at least 3 minutes.**
- **Do not attempt to repair or replace damaged direct-connect SRS component connectors. If a driver air bag direct-connect harness connector is damaged, the spiral cable must be replaced.**
- **Do not insert any foreign objects (screwdriver, etc.) into air bag module or harness connectors.**
- **Do not disassemble air bag module.**
- **Do not expose the air bag module to temperatures exceeding 90°C (194°F).**

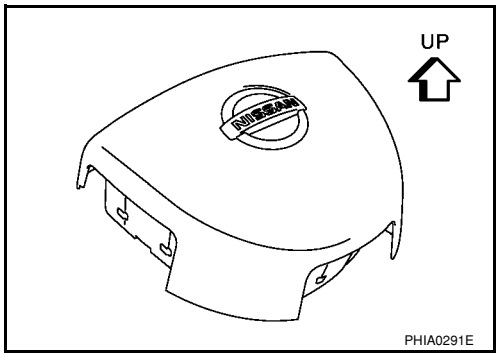

- **Replace the air bag module if it has been dropped or sustained an impact.**
- **Do not allow oil, grease or water to come in contact with the air bag module.**

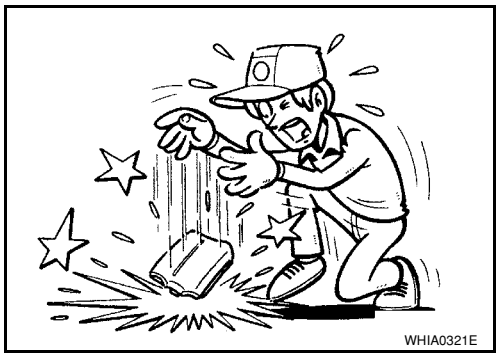

1. Disconnect the negative and positive battery cables, then wait at least 3 minutes.
2. Remove the covers RH/LH.
3. Place the steering wheel in the straight ahead position.

4. Release the driver air bag module retaining clips RH/LH.
   - Insert suitable 4mm - 6mm blunt tool (A) through LH access hole on back side of steering wheel (1) and contact retaining clip.

     CAUTION:
     Do not use sharp edged objects such as screwdrivers to release driver air bag module from steering wheel, SRS components may be unintentionally damaged.

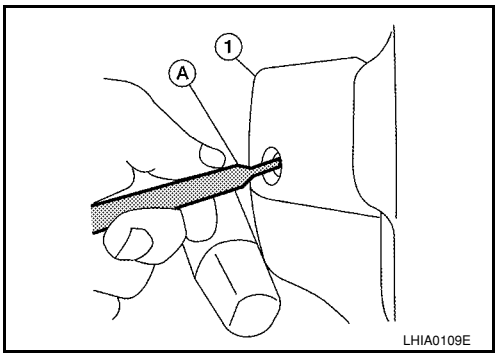

   - Press tool inward with sufficient force on retaining clip (1) to release LH pawl of driver air bag module from steering wheel.
   - Repeat for RH pawl of driver air bag module from steering wheel.
   - Tilt top edge away from steering wheel, then lift upward releasing lower pawl of driver air bag module from steering wheel.

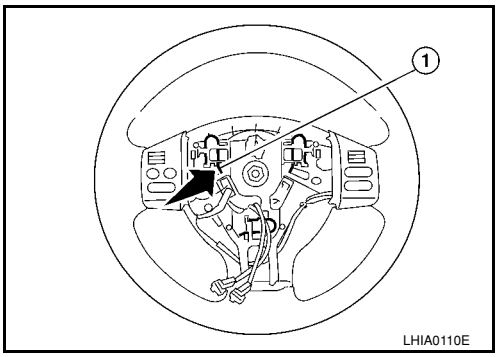

5. Disconnect driver air bag module connectors (1) and horn connector (2).

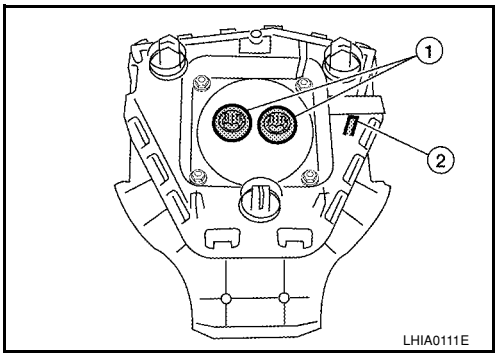

   - For removal/installation of the direct-connect SRS connectors, refer to SRS-6, "Direct-connect SRS Component Connectors".

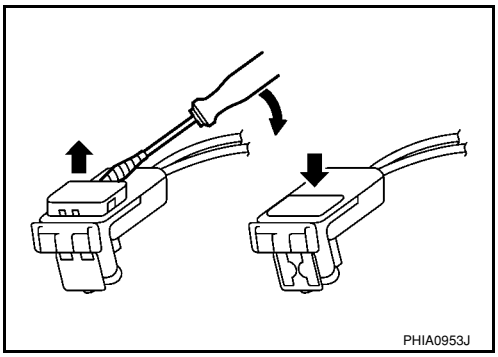

INSTALLATION

Installation is in the reverse order of removal.

- For removal/installation of the direct-connect SRS connectors, refer to SRS-6, "Direct-connect SRS Component Connectors".
- If driver air bag module is being replaced due to deployment, spiral cable must also be replaced. Refer to SRS-36.
- After the work is completed, perform self-diagnosis to check that no malfunction is detected. Refer to SRS-18, "SRS Operation Check".

CAUTION:

- **Make sure driver air bag module harness (1) is routed properly to avoid SRS component damage during installation.**

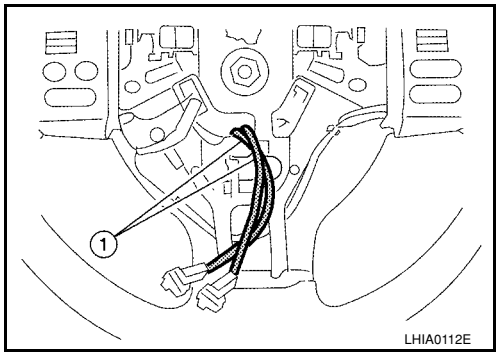

SPIRAL CABLE

Removal and Installation

INFOID:0000000001703927

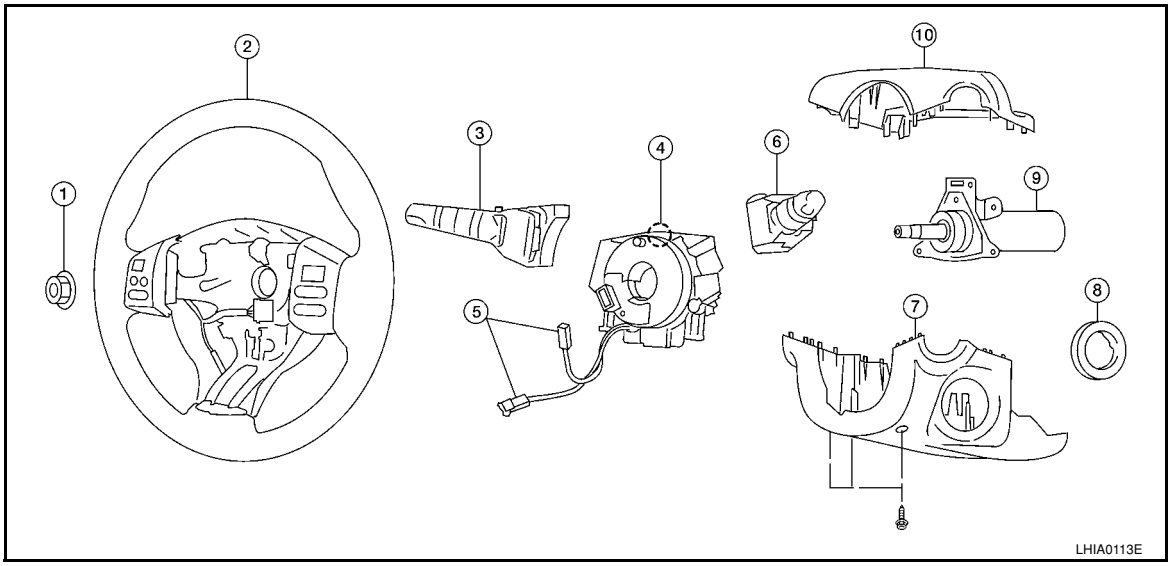

1. Nut, refer to PS-6
2. Steering wheel
3. Lighting and turn signal switch
4. Spiral cable
5. Driver air bag module connectors
6. Wiper and washer switch
7. Column cover lower
8. Steering lock escutcheon
9. Steering column assembly
10. Column cover upper

Pawl

REMOVAL

WARNING:

When servicing the SRS, do not work from directly in front of air bag module.

CAUTION:

- **Before servicing the SRS, turn ignition switch OFF, disconnect both battery cables and wait at least 3 minutes.**
- **Do not tap or bump the steering wheel.**
- **Do not disassemble the spiral cable.**
- **Do not allow oil, grease or water to come in contact with the spiral cable.**
- **Replace the spiral cable if it has been dropped or sustained an impact.**
- **With the steering linkage disconnected, the spiral cable may snap by turning the steering wheel beyond the limited number of turns. The spiral cable can be turned counterclockwise about 2.5 turns from the neutral position.**

1. Disconnect the negative and positive battery cables, then wait at least 3 minutes.
2. Set the front wheels to the straight-ahead/neutral position.
3. Remove the steering wheel. Refer to PS-6.
4. Remove the column cover upper and lower.
5. Disconnect wiper and washer switch connector (1). Then while pressing tabs (2), pull wiper and washer switch away from spiral cable to remove.

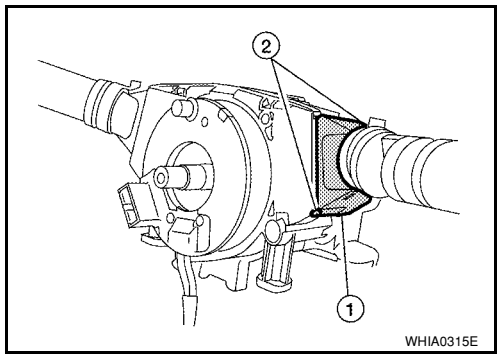

6. Disconnect lighting and turn signal switch connector (1). Then while pressing tabs (2), pull lighting and turn signal switch toward driver door to remove.
7. Remove the screws, then release the tab at the top and pull the spiral cable away from the steering column assembly.
8. Disconnect spiral cable connectors.

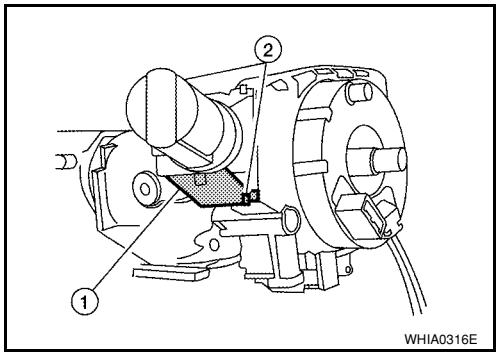

INSTALLATION

Installation is in the reverse order of removal.

- Align spiral cable correctly when installing steering wheel, refer to PS-6. Make sure spiral cable alignment and centering marks (B) are matched and in the neutral position. The neutral position is detected by turning left 2.6 revolutions from the right end position, ending with the locating pin (A) at the top. Place steering wheel in straight ahead position, then install it with the locating pin hole (C) directly over spiral cable locating pin.
- After the work is completed, perform self-diagnosis to make sure no malfunction is detected. Refer to SRS-18, "SRS Operation Check".

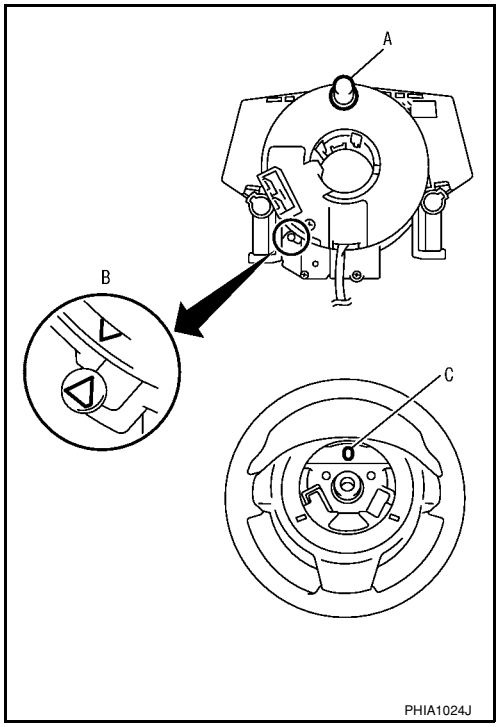

FRONT PASSENGER AIR BAG MODULE

Removal and Installation

INFOID:0000000001703928

REMOVAL

WARNING:
- **When servicing the SRS, do not work from directly in front of air bag module.**
- **Always place front passenger air bag module with pad side facing upward.**

CAUTION:
- **Before servicing SRS, turn the ignition switch OFF, disconnect both battery cables and wait at least 3 minutes.**
- **Do not use old bolts after removal; replace with new bolts.**
- **Do not insert any foreign objects (screwdriver, etc.) into air bag module or harness connectors.**
- **Do not disassemble air bag module.**
- **Do not expose the front passenger air bag module to temperatures exceeding 90°C (194°F).**
- **Replace the front passenger air bag module if it has been dropped or sustained an impact.**
- **Do not allow oil, grease or water to come in contact with the front passenger air bag module.**

1. Disconnect the negative and positive battery cables, then wait at least 3 minutes.
2. Remove the side ventilator assembly (right). Refer to IP-10.
3. Disconnect front passenger air bag module connector (1) and remove the upper instrument panel assembly bolts (2).
   ⇐: Vehicle front
4. Remove the front passenger air bag module bolts (3) from the steering member.

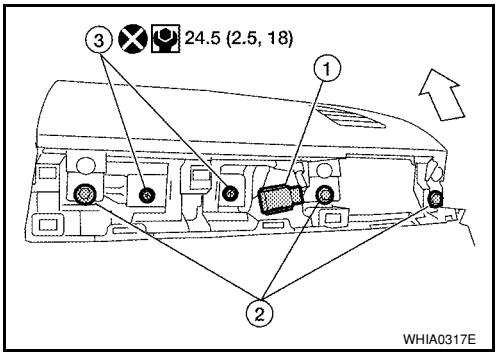

5. Release the pawls and remove the front passenger air bag module (1) from the upper instrument panel assembly (2).

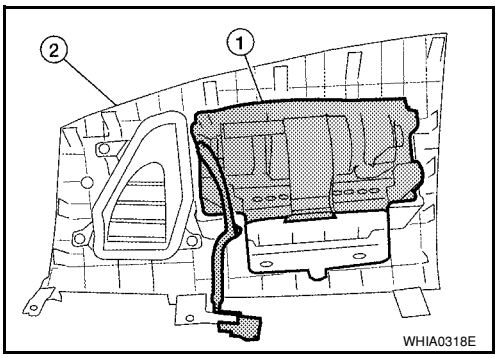

INSALLATION

Installation is in the reverse order of removal.
- After the work is completed, perform self-diagnosis to check that no malfunction is detected. Refer to SRS-18, "SRS Operation Check".

SIDE CURTAIN AIR BAG MODULE

Component

INFOID:0000000001703929

Hatchback Models

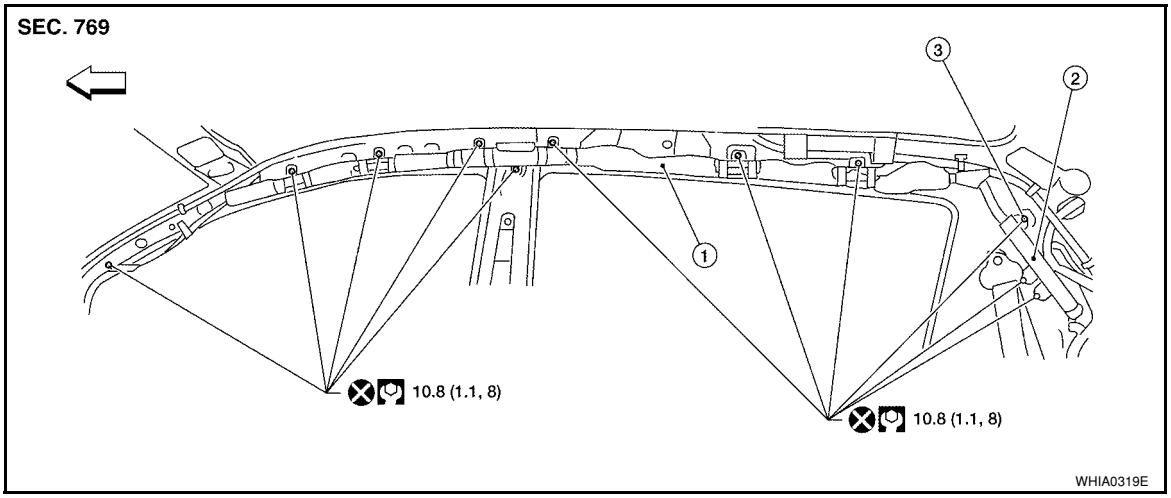

1. Side curtain air bag module
2. Inflator
3. Ground bolt

⇐ Vehicle front

Sedan Models

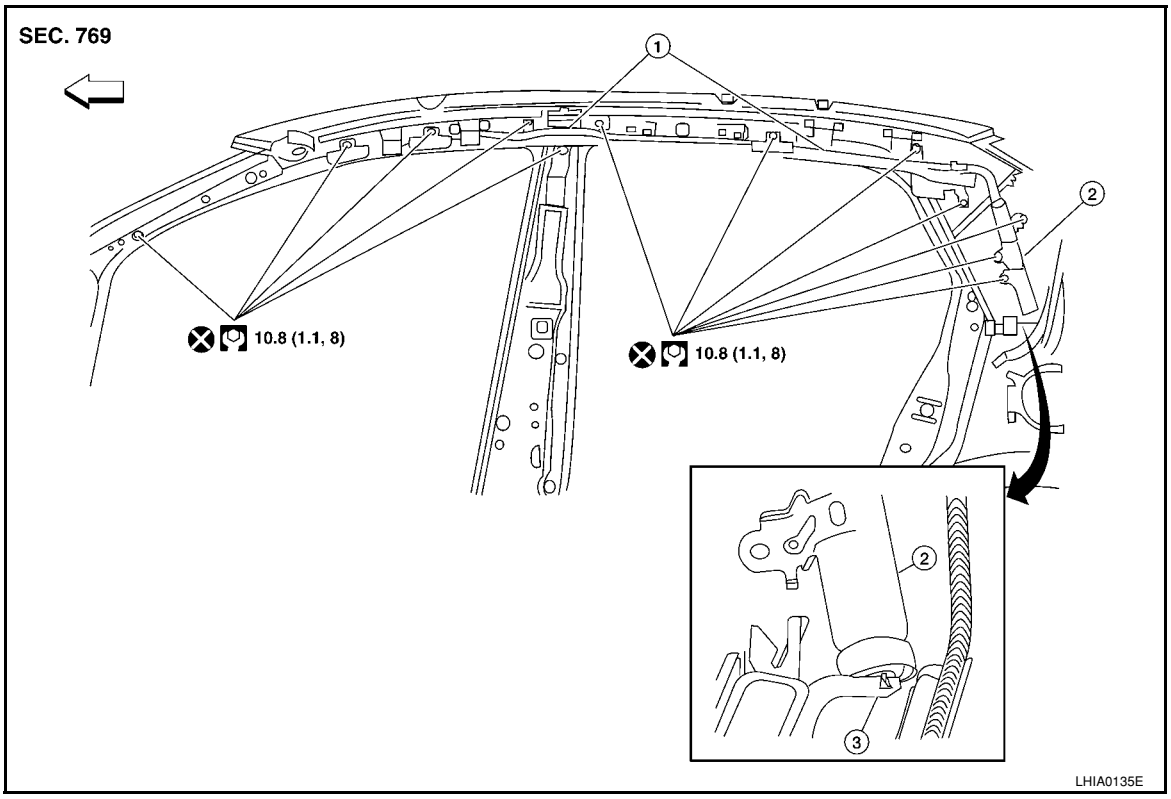

1. Side curtain air bag module
2. Inflator
3. Side air bag module connector

⇐ Vehicle front

Removal and Installation

INFOID:0000000001703930

REMOVAL

WARNING:

- **When servicing the SRS, do not work from directly in front of air bag module.**
- **Always place the curtain air bag module with deployment side facing upward.**
- **Do not reuse center pillar upper garnish if removed.**

CAUTION:

- **Before servicing SRS, turn the ignition switch OFF, disconnect both battery cables and wait at least 3 minutes.**
- **Do not use old bolts after removal; replace with new bolts.**
- **Do not insert any foreign objects (screwdriver, etc.) into air bag module or harness connectors.**
- **Do not disassemble air bag module.**
- **Do not expose the side curtain air bag module to temperatures exceeding 90°C (194°F).**
- **Replace the side curtain air bag module if it has been dropped or sustained an impact.**
- **Do not allow oil, grease or water to come in contact with the side curtain air bag module.**
- **Do not attempt to repair or replace damaged direct-connect SRS component connectors. If a direct-connect harness connector is damaged, the harness must be replaced.**

1. Disconnect both the negative and positive battery cables, then wait at least 3 minutes.
2. Remove the headlining. Refer to EI-45.
3. Disconnect side curtain air bag module connector.
   NOTE:
   For removal/installation of the direct-connect SRS connectors, refer to SRS-6, "Direct-connect SRS Component Connectors".
4. Remove the bolts in order starting at the rear, then remove the side curtain air bag module.

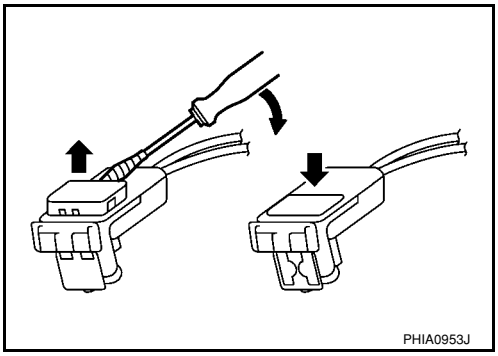

INSTALLATION

Installation is in the reverse order of removal.

- For removal/installation of the direct-connect SRS connectors, refer to SRS-6, "Direct-connect SRS Component Connectors".
- After replacement of side curtain air bag module, perform self-diagnosis to check that no malfunction is detected. Refer to SRS-18, "SRS Operation Check".

CRASH ZONE SENSOR

Removal and Installation

INFOID:0000000001703931

REMOVAL

CAUTION:

- **Before servicing the SRS, turn ignition switch OFF, disconnect both battery cables and wait at least 3 minutes.**
- **Do not disassemble the crash zone sensor.**
- **Do not use old nuts after removal; replace with new nuts.**
- **Replace the crash zone sensor if it has been dropped or sustained an impact.**
- **Check crash zone sensor to make sure it is free of deformities, dents, cracks or rust. If it shows any visible signs of damage, replace it with a new one.**

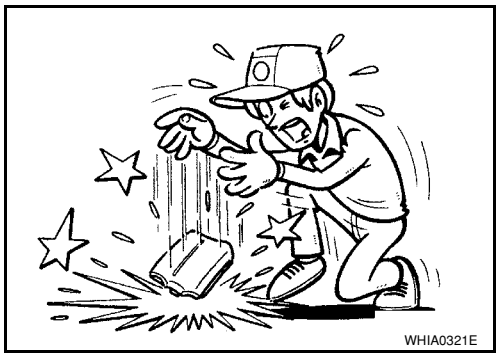

1. Disconnect both the negative and positive battery cables, then wait at least 3 minutes.
2. Remove upper radiator cover and front grille, refer to EI-20.
3. Disconnect crash zone sensor harness connector (1).
4. Remove the nuts (2) and remove the crash zone sensor (3).

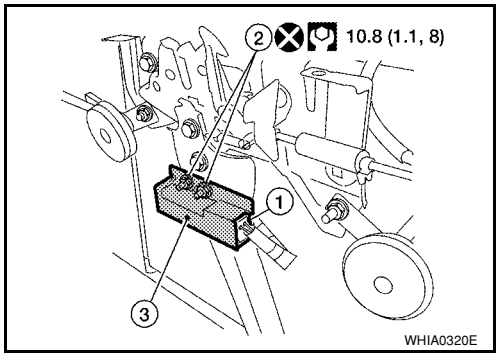

INSTALLATION

Installation is in the reverse order of removal.

- After the work is completed, perform self-diagnosis to check that no malfunction is detected. Refer to SRS-18, "SRS Operation Check".

SIDE AIR BAG (SATELLITE) SENSOR

Removal and Installation

INFOID:0000000001703932

REMOVAL

WARNING:
Do not reuse center pillar upper garnish if removed.
CAUTION:
- **Before servicing the SRS, turn ignition switch OFF, disconnect both battery cables and wait at least 3 minutes.**
- **Do not disassemble the side air bag (satellite) sensor.**
- **Do not use old nuts after removal; replace with new nuts.**
- **Replace the side air bag (satellite) sensor if it has been dropped or sustained an impact.**
- **Check side air bag (satellite) sensor to make sure it is free of deformities, dents, cracks or rust. If it shows any visible signs of damage, replace it with a new one.**

1. Disconnect both the negative and positive battery cables, then wait at least 3 minutes.
2. Remove the front seat belt retractor. Refer to SB-3, "Removal and Installation of Front Seat Belt".
3. Remove the nuts (1) and remove side air bag (satellite) sensor (2).
   ⇐: Vehicle front
4. Disconnect the side air bag (satellite) sensor harness connector (3).

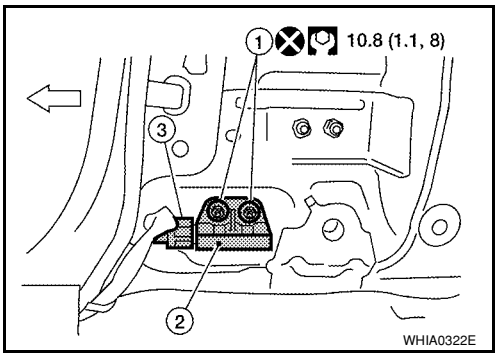

INSTALLATION

Installation is in the reverse order of removal.
- After the work is completed, perform self-diagnosis to make sure no malfunction is detected. Refer to SRS-18, "SRS Operation Check".

FRONT SEAT BELT PRE-TENSIONER

Removal and Installation

INFOID:0000000001703933

For removal and installation procedures, refer to SB-3, "Removal and Installation of Front Seat Belt".

DIAGNOSIS SENSOR UNIT

Removal and Installation

INFOID:0000000001703934

REMOVAL

WARNING:

Before disconnecting diagnosis sensor unit harness connector(s), be sure to disconnect harness connectors from air bag modules and front seat belt pre-tensioner to prevent deployment by static electricity.

CAUTION:

- **Before servicing the SRS, turn the ignition switch OFF, disconnect both battery cables and wait at least 3 minutes.**
- **Do not disassemble diagnosis sensor unit.**
- **Do not use old bolts; replace with new bolts.**
- **Replace the diagnosis sensor unit if it has been dropped or sustained an impact.**
- **Check diagnosis sensor unit bracket to make sure it is free of deformities, dents, cracks or rust. If it shows any visible signs of damage, replace with new one.**
- **The diagnosis sensor unit must always be installed with the arrow mark "⇐" pointing toward the front of the vehicle for proper operation.**

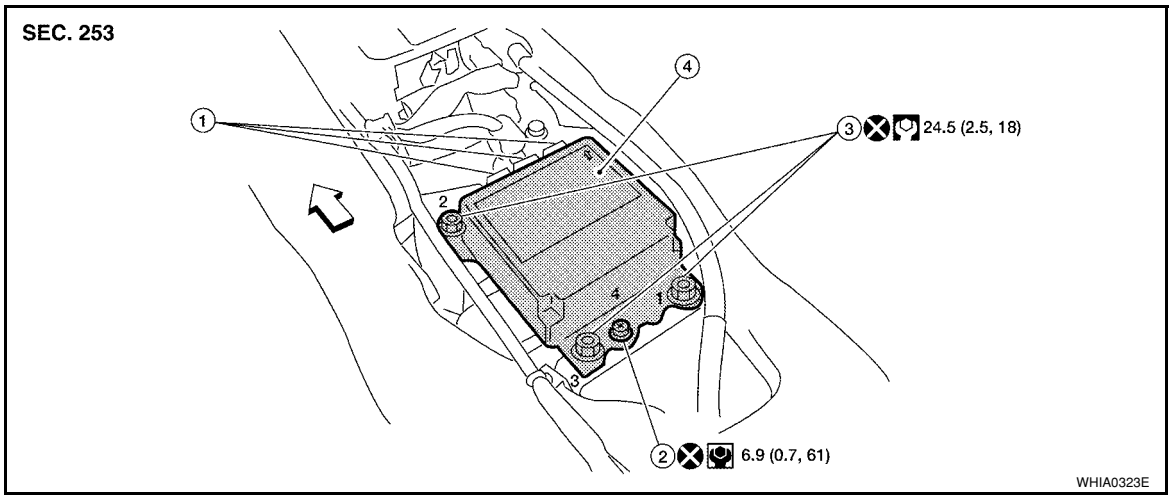

1.	Diagnosis sensor unit connectors	2.	Ground Bolt	3.	Bolt
4.	Diagnosis sensor unit	⇐	Vehicle front		

1. Disconnect the negative and positive battery cables, then wait at least 3 minutes.
2. Disconnect the harness connectors for each air bag module and seat belt pre-tensioner. Refer to SRS-33, SRS-38, SRS-39, SRS-43.
3. Remove center console assembly. Refer to IP-10.
4. Disconnect diagnosis sensor unit connectors.
5. Remove the bolts and the ground bolt, then remove the diagnosis sensor unit.

INSTALLATION

Installation is in the reverse order of removal.

- The diagnosis sensor unit must always be installed with the arrow mark "⇐" pointing toward the front of the vehicle.
- Follow the tightening sequence 1,2,3,4 as shown.
- After the work is completed, perform self-diagnosis to check that no malfunction is detected. Refer to SRS-18, "SRS Operation Check".

ECU DISCRIMINATED NO.

After replacing the diagnosis sensor unit, confirm that the diagnosis sensor unit identification is correct for the vehicle as equipped. Refer to SRS-16, "CONSULT-III Function (AIR BAG)".

OCCUPANT CLASSIFICATION SYSTEM CONTROL UNIT

Removal and Installation

INFOID:0000000001703935

The occupant classification system control unit, occupant classification system sensor, and bladder are an integral part of the front passenger seat cushion and are replaced as an assembly. Refer to SE-10 to remove the seat, and SE-12, "Disassembly and Assembly" to replace the seat cushion.

COLLISION DIAGNOSIS

For Frontal Collision

INFOID:0000000001703936

Check the SRS components using the following table.

- After the work is completed, perform self-diagnosis to check that no malfunction is detected. Refer to SRS-18, "SRS Operation Check".

SRS INSPECTION (FOR FRONTAL COLLISION)

Part	SRS is activated	SRS is NOT activated
Driver air bag module	If the driver air bag has deployed: REPLACE Install with new fasteners.	If the driver air bag has NOT been activated: 1. Remove driver air bag module. Check harness cover and connectors for damage, terminals for deformities, and harness for binding. 2. Install driver air bag module into the steering wheel to check fit and alignment with the wheel. 3. If no damage is found, reinstall with new fasteners. 4. If damaged—REPLACE. Install driver air bag modules with new fasteners.
Front passenger air bag module	If the front passenger air bag has deployed: REPLACE Install with new fasteners.	If the front passenger air bag has NOT been activated: 1. Remove front passenger air bag module. Check harness cover and connectors for damage, terminals for deformities, and harness for binding. 2. Install front passenger air bag module into the instrument panel to check fit with the instrument panel. 3. If no damage is found, reinstall with new fasteners. 4. If damaged—REPLACE. Install front passenger air bag modules with new fasteners.
Crash zone sensor	If any of the front air bags or seat belt pre-tensioners* have been activated: REPLACE the crash zone sensor and bracket with new fasteners. *: Confirm seat belt pre-tensioner activation using CONSULT-III only.	If the front air bags or seat belt pre-tensioners have NOT been activated: 1. Remove the crash zone sensor. Check harness connectors for damage, terminals for deformities, and harness for binding. 2. Check for visible signs of damage (dents, cracks, deformation) of the crash zone sensor and bracket. 3. Install the crash zone sensor to check fit. 4. If no damage is found, reinstall with new fasteners. 5. If damaged—REPLACE the crash zone sensor and bracket with new fasteners.
Seat belt pre-tensioner assemblies (All applicable locations: buckle, reel, lap outer)	If either the driver or passenger seat belt pre-tensioner* has been activated: REPLACE all seat belt pre-tensioner assemblies with new fasteners. *: Confirm seat belt pre-tensioner activation using CONSULT-III only.	If the pre-tensioners have NOT been activated: 1. Remove seat belt pre-tensioners. Check harness cover and connectors for damage, terminals for deformities, and harness for binding. 2. Check belts for damage and anchors for loose mounting. 3. Check retractor for smooth operation. 4. Check seat belt adjuster for damage. 5. Check for deformities of the center pillar inner. 6. If the center pillar inner has no damage, REPLACE the seat belt pre-tensioner assembly. 7. If no damage is found, reinstall seat belt pre-tensioner assembly. 8. If damaged—REPLACE. Install the seat belt pre-tensioners with new fasteners.
Diagnosis sensor unit	If any of the SRS components have been activated: REPLACE the diagnosis sensor unit. Install with new fasteners.	If none of the SRS components have been activated: 1. Check case for dents, cracks or deformities. 2. Check connectors for damage, and terminals for deformities. 3. If no damage is found, reinstall with new fasteners. 4. If damaged—REPLACE. Install diagnosis sensor unit with new fasteners.

Part	SRS is activated	SRS is NOT activated
Steering wheel	1. Visually check steering wheel for deformities. 2. Check harness (built into steering wheel) and connectors for damage, and terminals for deformities. 3. Install driver air bag module into the steering wheel to check fit and alignment with the wheel. 4. Check steering wheel for excessive free play. 5. If no damage is found, reinstall. 6. If damaged—REPLACE.	
Spiral cable	If the driver front air bag has deployed: REPLACE the spiral cable.	If the driver front air bag has not deployed: 1. Visually check spiral cable and combination switch for damage. 2. Check connectors and protective tape for damage. 3. Check steering wheel for noise, binding or heavy operation. 4. If no damage is found, reinstall. 5. If damaged—REPLACE.
Occupant classification system (Passenger seat)	1. Remove passenger seat. 2. Check control unit case for dents, cracks of deformities. 3. Check connectors and pressure sensor tube for damage, and terminals for deformities. 4. Check seat frame and cushion pan for dents or deformities. 5. If no damage is found, reinstall seat with new fasteners. 6. If damaged — REPLACE seat cushion assembly with new fasteners.	
Harness and connectors	1. Check connectors for poor connection, damage, and terminals for deformities. 2. Check harness for binding, chafing, cuts, or deformities. 3. If no damage is found, reinstall the harness and connectors. 4. If damaged—REPLACE the damaged harness. Do not attempt to repair, splice or modify any SRS harness.	
Instrument panel	If the passenger front air bag has deployed: REPLACE the instrument panel assembly.	If the passenger front air bag has NOT deployed: 1. Visually check instrument panel for damage. 2. If no damage is found, reinstall the instrument panel. 3. If damaged—REPLACE the instrument panel.

For Side and Rollover Collision

INFOID:0000000001703937

Check the SRS components using the following table.

- After the work is completed, perform self-diagnosis to check that no malfunction is detected. Refer to SRS-18, "SRS Operation Check".

WHEN SRS IS ACTIVATED IN THE SIDE OR ROLLOVER COLLISION

1. Replace the following components:
- Front seat back assembly (on the side on which side air bag is activated)
- Diagnosis sensor unit
- (LH or RH) side air bag (satellite) sensor (on the side on which side air bag is activated)
2. Check the SRS components and the related parts using the following table.
- Replace any SRS components and the related parts showing visible signs of damage (dents, cracks, deformation).
3. Conduct self-diagnosis using CONSULT-III and “AIR BAG” warning lamp. Refer to SRS-18, "SRS Operation Check" for details. Ensure entire SRS operates properly.

WHEN SRS IS NOT ACTIVATED IN THE SIDE OR ROLLOVER COLLISION

1. Check the SRS components and the related parts using the following table.
- If the front seat back assembly is damaged, the front seat back assembly must be replaced.
2. Conduct self-diagnosis using CONSULT-III and “AIR BAG” warning lamp. Refer to SRS-18, "SRS Operation Check" for details. Ensure entire SRS operates properly.

SRS INSPECTION (FOR SIDE AND ROLLOVER COLLISION)

Part	SRS is activated	SRS is NOT activated
LH side curtain air bag module	If the LH side curtain air bag has deployed: REPLACE the LH side curtain air bag module. (Repair the center pillar inner, etc. before installing new one if damaged.)	If the LH side curtain air bag has NOT deployed: 1. Check for visible signs of damage (dents, tears, deformation) of the center pillar on the collision side. 2. If damaged—Remove the LH side curtain air bag module. 3. Check for visible signs of damaged (tears etc.) of the LH side curtain air bag module. 4. Check harness and connectors for damage, and terminals for deformities. 5. If no damage is found, reinstall the LH side curtain air bag module with new fasteners. 6. If damaged—REPLACE the LH side curtain air bag module with new fasteners.
RH side curtain air bag module	If the RH side curtain air bag has deployed: REPLACE the RH side curtain air bag module. (Repair the center pillar inner, etc. before installing new one if damaged.)	If the RH side curtain air bag has NOT deployed: 1. Check for visible signs of damage (dents, tears, deformation) of the center pillar on the collision side. 2. If damaged—Remove the RH side curtain air bag module. 3. Check for visible signs of damaged (tears etc.) of the RH side curtain air bag module. 4. Check harness and connectors for damage, and terminals for deformities. 5. If no damage is found, reinstall the RH side curtain air bag module with new fasteners. 6. If damaged—REPLACE the RH side curtain air bag module with new fasteners.
Front LH side air bag module	If the front LH side air bag has deployed: REPLACE front LH seatback assembly.	If the front LH side air bag has NOT deployed: 1. Check for visible signs of damage (dents, tears, deformation) of the seat back on the collision side. 2. Check harness and connectors for damage, and terminals for deformities. 3. If damaged—REPLACE the front LH seatback assembly.
Front RH side air bag module	If the front RH side air bag has deployed: REPLACE front RH seatback assembly.	If the front RH side air bag has NOT deployed: 1. Check for visible signs of damage (dents, tears, deformation) of the seat back on the collision side. 2. Check harness and connectors for damage, and terminals for deformities. 3. If damaged—REPLACE the front RH seatback assembly.
(LH or RH) side air bag (satellite) sensor	If any of the SRS components have deployed: REPLACE the side air bag (satellite) sensor on the collision side with new fasteners. (Repair the center pillar inner, etc. before installing new one if damaged.)	If none of the SRS components have been activated: 1. Remove the side air bag (satellite) sensor on the collision side. Check harness connectors for damage, terminals for deformities, and harness for binding. 2. Check for visible signs of damage (dents, cracks, deformation) of the side air bag (satellite) sensor. 3. Install the side air bag (satellite) sensor to check fit. 4. If no damage is found, reinstall the side sir bag (satellite) sensor with new fasteners. 5. If damaged—REPLACE the side air bag (satellite) sensor with new fasteners.
Diagnosis sensor unit	If any of the SRS components have deployed: REPLACE the diagnosis sensor unit with new fasteners.	If none of the SRS components have been activated: 1. Check case and bracket for dents, cracks or deformities. 2. Check connectors for damage, and terminals for deformities. 3. If no damage is found, reinstall the diagnosis sensor unit with new fasteners. 4. If damaged—REPLACE the diagnosis sensor unit with new fasteners.
Seat belt pre-tensioner assemblies (All applicable locations: buckle, reel, lap outer)	If either the driver or passenger seat belt pre-tensioner* has been activated: REPLACE all seat belt pre-tensioner assemblies with new fasteners. *: Confirm seat belt pre-tensioner activation using CONSULT-III only.	If the pre-tensioners have NOT been activated: 1. Remove seat belt pre-tensioners. Check harness cover and connectors for damage, terminals for deformities, and harness for binding. 2. Check belts for damage and anchors for loose mounting. 3. Check retractor for smooth operation. 4. Check seat belt adjuster for damage. 5. Check for deformities of the center pillar inner. 6. If the center pillar inner has no damage, REPLACE the seat belt pre-tensioner assembly. 7. If no damage is found, reinstall seat belt pre-tensioner assembly. 8. If damaged—REPLACE. Install the seat belt pre-tensioners with new fasteners.

Part	SRS is activated	SRS is NOT activated
Seat (with front side air bag)	If either the front LH or front RH side air bag modules has been deployed: REPLACE front seat-back assembly on the deployed side.	If the front LH or front RH side air bag modules have NOT deployed: 1. Visually check the seat on the collision side. 2. Remove the seat on the collision side and check the following for damage and deformities. - Harness, connectors and terminals - Frame and recliner (for front and rear seat), and also adjuster and slides (for front seat) 3. If no damage is found, reinstall the seat. 4. If damaged—REPLACE the damaged seat parts using new fasteners. If the front seat back is damaged, the front seat back assembly must be replaced.
Center inner pillar	1. Check the center inner pillar on the collision side for damage (dents, cracks, deformation). 2. If damaged—REPAIR the center inner pillar.	
Trim/headlining	1. Check for visible signs of damage (dents, cracks, deformation) of the interior trim on the collision side. 2. If damaged—REPLACE the damaged trim parts.	

SECTION STC
STEERING CONTROL SYSTEM

CONTENTS

EPS

SERVICE INFORMATION 2

PRECAUTIONS 2
Precaution for Supplemental Restraint System (SRS) "AIR BAG" and "SEAT BELT PRE-TENSIONER" 2
Precaution Necessary for Steering Wheel Rotation After Battery Disconnect 2
Service Notice or Precaution for EPS System 2

EPS SYSTEM 4
System Description 4
Schematic 5
CAN Communication 5

TROUBLE DIAGNOSIS 6
Fail-Safe Function 6
How to Perform Trouble Diagnosis 6
Component Parts Location 7
Wiring Diagram - EPS - 8
EPS Control Unit Input/Output Signal Reference Value 9
EPS Terminal and Reference Value 10
CONSULT-III Function (EPS) 11
Symptom Chart 13

TROUBLE DIAGNOSIS FOR SYSTEM 14
DTC C1601 BATTERY VOLT 14
DTC C1604 TORQUE SENSOR 15
DTC C1606 EPS MOTOR 16
DTC C1607 EEPROM 17
DTC C1608 CONTROL UNIT 17
DTC C1609 CAN VHCL SPEED 18
DTC C1610 CAN ENG RPM 19
DTC U1000 CAN COMM CIRCUIT 19
Component Inspection 19

TROUBLE DIAGNOSIS FOR SYMPTOMS 21
EPS Warning Lamp Does Not Turn ON 21
EPS Warning Lamp Does Not Turn OFF 21
Steering Wheel Turning Force Is Heavy or Light 22
Unbalance Steering Wheel Turning Force and Return Between Right and Left 23
Unbalance Steering Wheel Turning Force (Torque Variation) 24

SERVICE INFORMATION

PRECAUTIONS

Precaution for Supplemental Restraint System (SRS) "AIR BAG" and "SEAT BELT PRE-TENSIONER"

INFOID:0000000001703869

The Supplemental Restraint System such as “AIR BAG” and “SEAT BELT PRE-TENSIONER”, used along with a front seat belt, helps to reduce the risk or severity of injury to the driver and front passenger for certain types of collision. This system includes seat belt switch inputs and dual stage front air bag modules. The SRS system uses the seat belt switches to determine the front air bag deployment, and may only deploy one front air bag, depending on the severity of a collision and whether the front occupants are belted or unbelted.
Information necessary to service the system safely is included in the SRS and SB section of this Service Manual.

WARNING:

- **To avoid rendering the SRS inoperative, which could increase the risk of personal injury or death in the event of a collision which would result in air bag inflation, all maintenance must be performed by an authorized NISSAN/INFINITI dealer.**
- **Improper maintenance, including incorrect removal and installation of the SRS, can lead to personal injury caused by unintentional activation of the system. For removal of Spiral Cable and Air Bag Module, see the SRS section.**
- **Do not use electrical test equipment on any circuit related to the SRS unless instructed to in this Service Manual. SRS wiring harnesses can be identified by yellow and/or orange harnesses or harness connectors.**

Precaution Necessary for Steering Wheel Rotation After Battery Disconnect

INFOID:0000000001703870

NOTE:

- This Procedure is applied only to models with Intelligent Key system and NVIS/IVIS (NISSAN/INFINITI VEHICLE IMMOBILIZER SYSTEM - NATS).
- Remove and install all control units after disconnecting both battery cables with the ignition knob in the ″LOCK″ position.
- Always use CONSULT-III to perform self-diagnosis as a part of each function inspection after finishing work. If DTC is detected, perform trouble diagnosis according to self-diagnostic results.

For models equipped with the Intelligent Key system and NVIS/IVIS, an electrically controlled steering lock mechanism is adopted on the key cylinder.
For this reason, if the battery is disconnected or if the battery is discharged, the steering wheel will lock and steering wheel rotation will become impossible.
If steering wheel rotation is required when battery power is interrupted, follow the procedure below before starting the repair operation.

OPERATION PROCEDURE

1. Connect both battery cables.
   NOTE:
   Supply power using jumper cables if battery is discharged.
2. Use the Intelligent Key or mechanical key to turn the ignition switch to the ″ACC″ position. At this time, the steering lock will be released.
3. Disconnect both battery cables. The steering lock will remain released and the steering wheel can be rotated.
4. Perform the necessary repair operation.
5. When the repair work is completed, return the ignition switch to the ″LOCK″ position before connecting the battery cables. (At this time, the steering lock mechanism will engage.)
6. Perform a self-diagnosis check of all control units using CONSULT-III.

Service Notice or Precaution for EPS System

INFOID:0000000001703871

CAUTION:

Check or confirm the following item when performing the trouble diagnosis.

- **Check any possible causes by interviewing the symptom and it's condition from the customer if any malfunction, such as EPS warning lamp turns ON, occurs.**
- **Check if air pressure and size of tires are proper, the specified part is used for the steering wheel, and control unit is genuine part.**
- **Check if the connection of steering column assembly and steering gear assembly is proper (there is not looseness of mounting bolts, damage of rods, boots or sealants, and leakage of grease, etc).**
- **Check if the wheel alignment is adjusted properly.**
- **Check if there is any damage or modification to suspension or body resulting in increased weight or altered ground clearance.**
- **Check if installation conditions of each link and suspension are proper.**
- **Check if the battery voltage is proper**
- **Check connection conditions of each connector are proper.**
- **Before connecting or disconnecting the EPS control unit harness connector, turn ignition switch "OFF" and disconnect battery ground cable. Because battery voltage is applied to EPS control unit even if ignition switch is turned "OFF".**

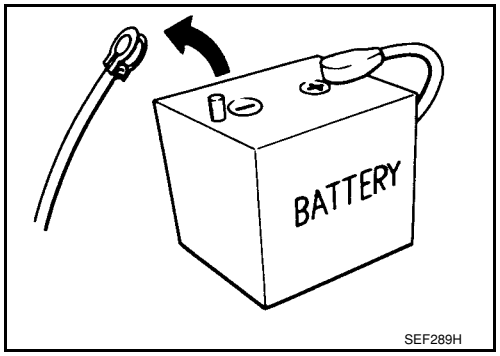

- **When connecting or disconnecting pin connectors into or from EPS control unit, take care not to damage pin terminals (bend or break).**
  When connecting pin connectors, make sure that there are no bends or breaks on EPS control unit pin terminal.

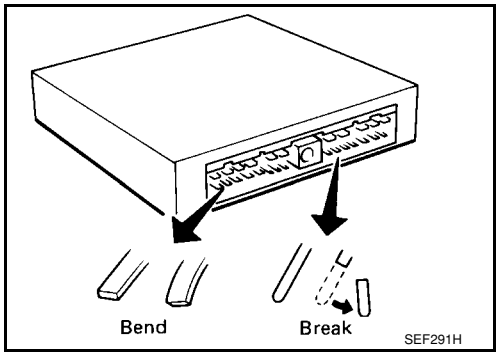

- **Before replacing EPS control unit, perform EPS control unit input/output signal inspection and make sure whether EPS control unit functions properly or not. Refer to STC-9, "EPS Control Unit Input/Output Signal Reference Value".**

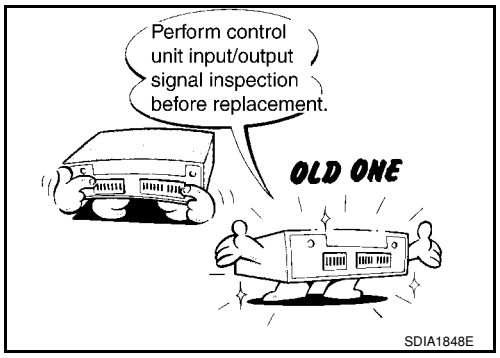

EPS SYSTEM

System Description

INFOID:0000000001703872

EPS CONTROL UNIT

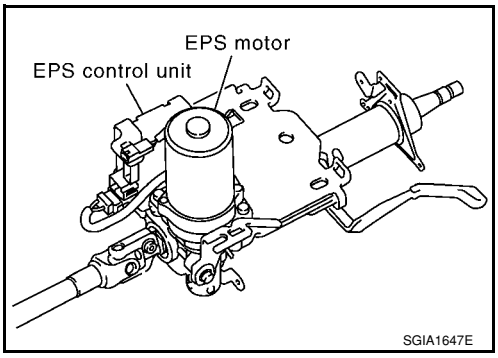

- EPS control unit performs an arithmetical operation on data, such as steering wheel turning force (sensor signal) from the torque sensor, vehicle speed signal, etc. Then it generates an optimum assist torque to the EPS motor according to the driving condition.
- EPS control unit decreases the output to EPS motor while extremely using the power steering function (e.g., full steering) for protecting EPS motor and EPS control unit (Protect overload status). While activating protect overload status, the assist torque gradually decreases, and the steering wheel turning force becomes heavy. The normal assist torque reactivates by not steering.
- In case of an error in the electrical system, the fail-safe function stops output signals to the EPS motor. Then the previous state is changed to the manual steering state.
- Self-diagnosis can be done with CONSULT-III.

EPS MOTOR

EPS motor provides the assist torque by control signal from EPS control unit.

TORQUE SENSOR

Torque sensor detects the steering torque, and transmit the signal to EPS control unit.

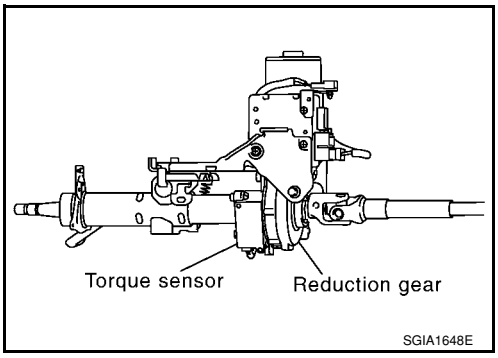

REDUCTION GEAR

Reduction gear increases the assist torque provided from EPS motor with worm gears, and outputs to the column shaft.

EPS WARNING LAMP

Turns ON when there is a malfunction in EPS system. It indicates that fail-safe mode is engaged and enters a manual steering state (Control turning force steering wheel becomes heavy).
Also turns ON when ignition switch is turned ON, for purpose of lamp check. Turns OFF after the engine starts if system is normal.

EPS Warning Lamp Indication

Condition	EPS warning lamp
Lamp check	Turns ON when ignition switch is turned ON. Turns OFF after engine start.
EPS system malfunction	ON
Other than above (system normal)	OFF

Schematic

INFOID:0000000001703873

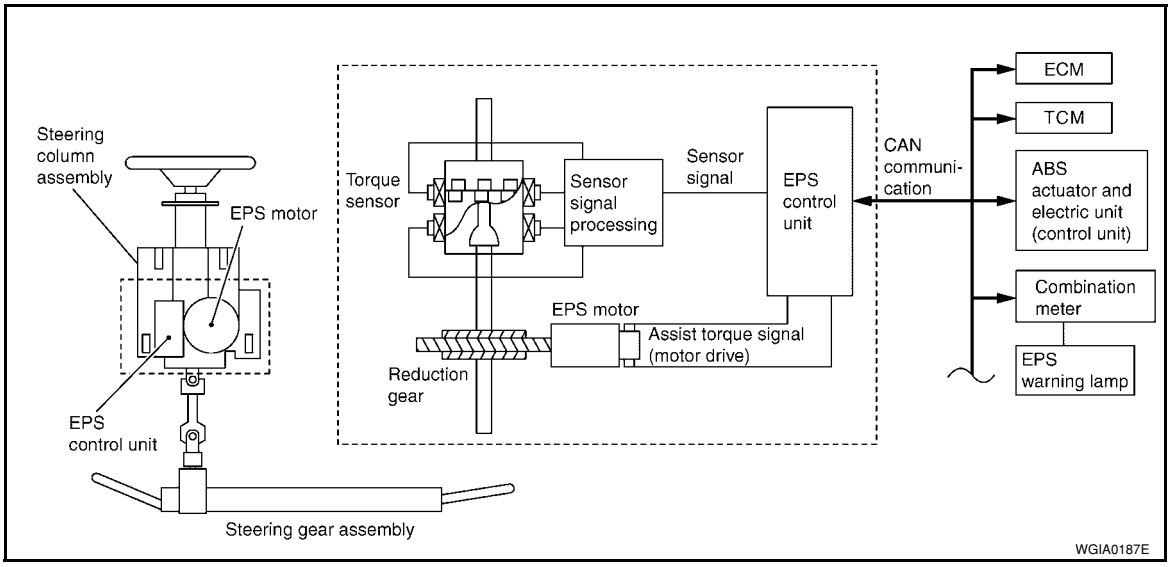

COMPONENTS FUNCTION DESCRIPTION

Component parts	Function
EPS control unit (Electric power steering control unit)	• Outputs optimum assist torque signal to EPS motor. • Reduces output signals to EPS motor and protects EPS motor and EPS control unit when using power steering continuously and excessively. • As a fail-safe function, turned off output signal to EPS motor and then enters a manual steering state, if malfunction is detected in EPS system.
EPS motor	Products assist torque by control signal from EPS control unit.
Torque sensor	Detects steering wheel turning force and outputs sensor signal to EPS control unit.
Reduction gear	Increases motor-produced assist torque by worm gear and transmits it to column shaft.
EPS warning lamp	Illuminates if malfunction is detected in electrical system of EPS system.
ECM	Transmits the following signals via CAN communication to EPS control unit. • Engine status signal
ABS actuator and electric unit (control unit) (With ABS)	Transmits the following signals via CAN communication to EPS control unit. • Vehicle speed signal
Combination meter	Transmits the following signals via CAN communication to EPS control unit. • Vehicle speed signal
TCM (Without ABS)	Transmits the following signals via CAN communication to EPS control unit. • Vehicle speed signal

CAN Communication

INFOID:0000000001703874

SYSTEM DESCRIPTION

CAN (Controller Area Network) is a serial communication line for real time application. It is an on-vehicle multiplex communication line with high data communication speed and excellent error detection ability. Many electronic control units are equipped onto a vehicle, and each control unit shares information and links with other control units during operation (not independent). In CAN communication, control units are connected with 2 communication lines (CAN-H line, CAN-L line) allowing a high rate of information transmission with less wiring. Each control unit transmits/receives data but selectively reads required data only.
For details, refer to LAN-23, "CAN System Specification Chart".

TROUBLE DIAGNOSIS

Fail-Safe Function

INFOID:0000000001703875

- If any malfunction occurs in the system, and control unit detects the malfunction, EPS warning lamp on combination meter turns ON to indicate system malfunction.
- When EPS warning lamp is ON, enters a manual steering state. (Control turning force steering wheel becomes heavy.)

How to Perform Trouble Diagnosis

INFOID:0000000001703876

BASIC CONCEPT

- To perform trouble diagnosis, it is a must to have an understanding about vehicle systems (control and mechanism) thoroughly.
- It is also important to clarify customer complaints before starting the inspection.
  First of all, reproduce the symptoms, and understand them fully. Ask customer about his/her complaints carefully. In some cases, it will be necessary to check symptoms by driving vehicle with customer.
  CAUTION:
  Customers are not professionals. It is dangerous to make an easy guess like “maybe the customer means that...” or “maybe the customer mentions this symptom”.

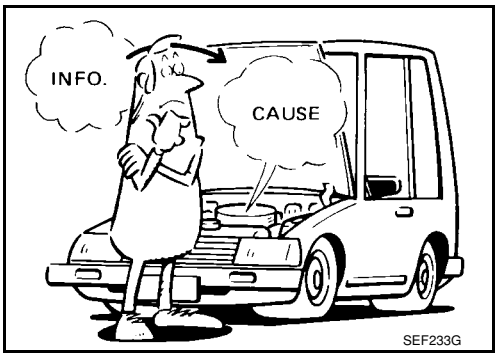

- It is essential to check symptoms right from the beginning in order to repair malfunctions completely.
  For intermittent malfunctions, reproduce symptoms based on interview with customer and past examples. Do not perform inspection on ad hoc basis. Most intermittent malfunctions are caused by poor contacts. In this case, it will be effective to shake suspected harness or connector by hand. When repairing without any symptom diagnosis, you cannot judge if malfunctions has actually been eliminated.

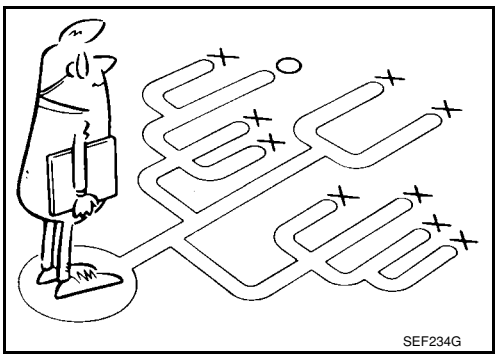

PRECAUTIONS FOR TROUBLE DIAGNOSIS

- Be sure to check the procedures of the trouble diagnosis in advance. Refer to "How to Perform Trouble Diagnosis" .
- Always erase memory after completing trouble diagnosis. Refer to STC-11, "CONSULT-III Function (EPS)" .
- Checking continuity and voltage between units, be sure to check connector terminals for disconnection, looseness, bend, or collapse. Repair or replace applicable part if any non-standard condition is detected.
- Be careful not to forcibly extend any connector terminal if a circuit tester is used for the check.
- Always confirm the general precautions. Refer to GI-3, "General Precaution" .

INTERVIEW

- Complaints vary depending on the person. It is important to clarify the customer's actual remarks.
- Ask the customer about what symptoms occur under what conditions. Use the information to reproduce the symptom of confirm by vehicle.

KEY POINTS

WHAT ..... Vehicle & engine model
WHEN ..... Date, Frequencies
WHERE..... Road conditions
HOW ..... Operating conditions, Weather conditions, Symptoms

SEF907L

Component Parts Location

INFOID:0000000001703877

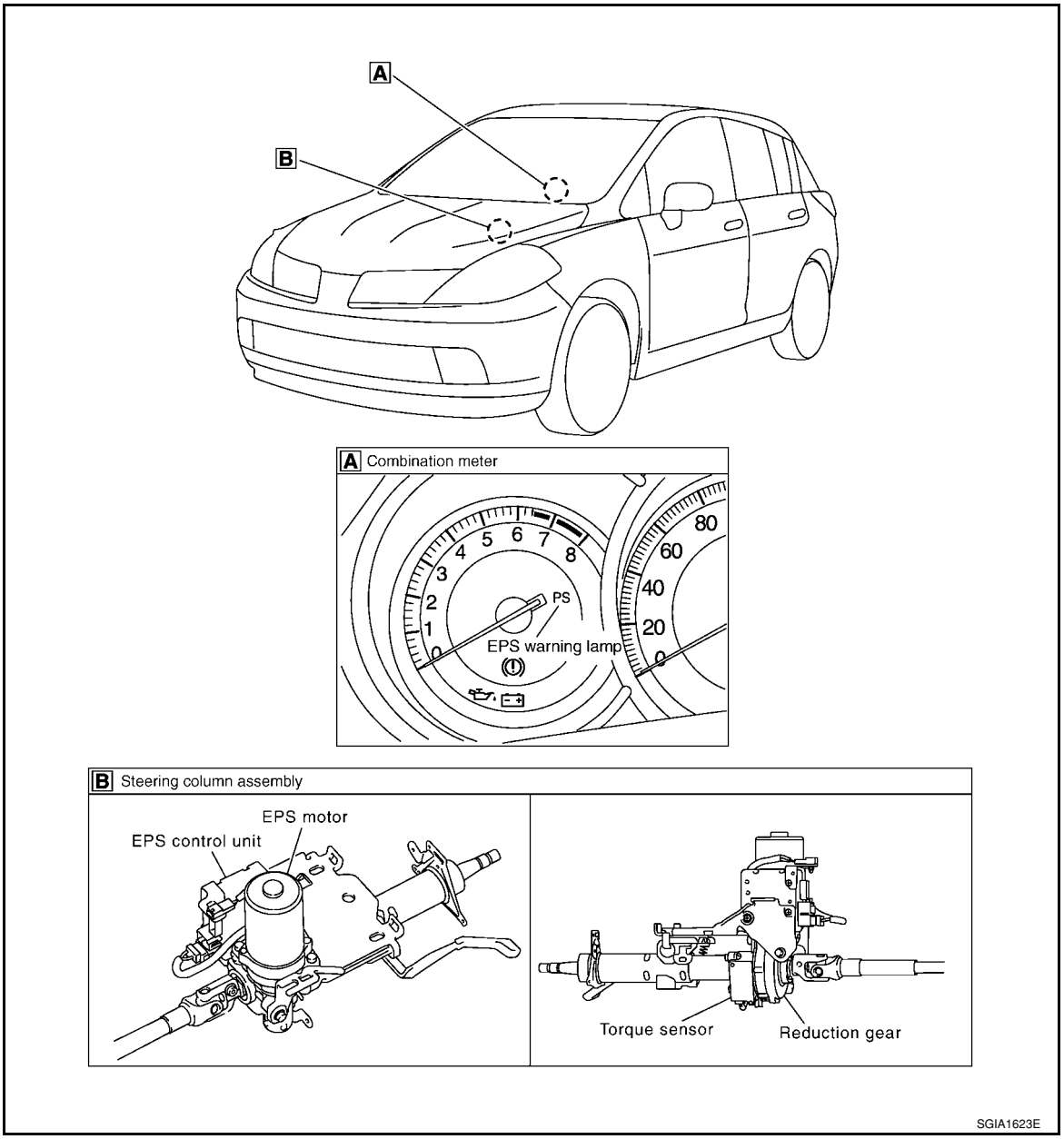

Wiring Diagram - EPS -

INFOID:0000000001703878

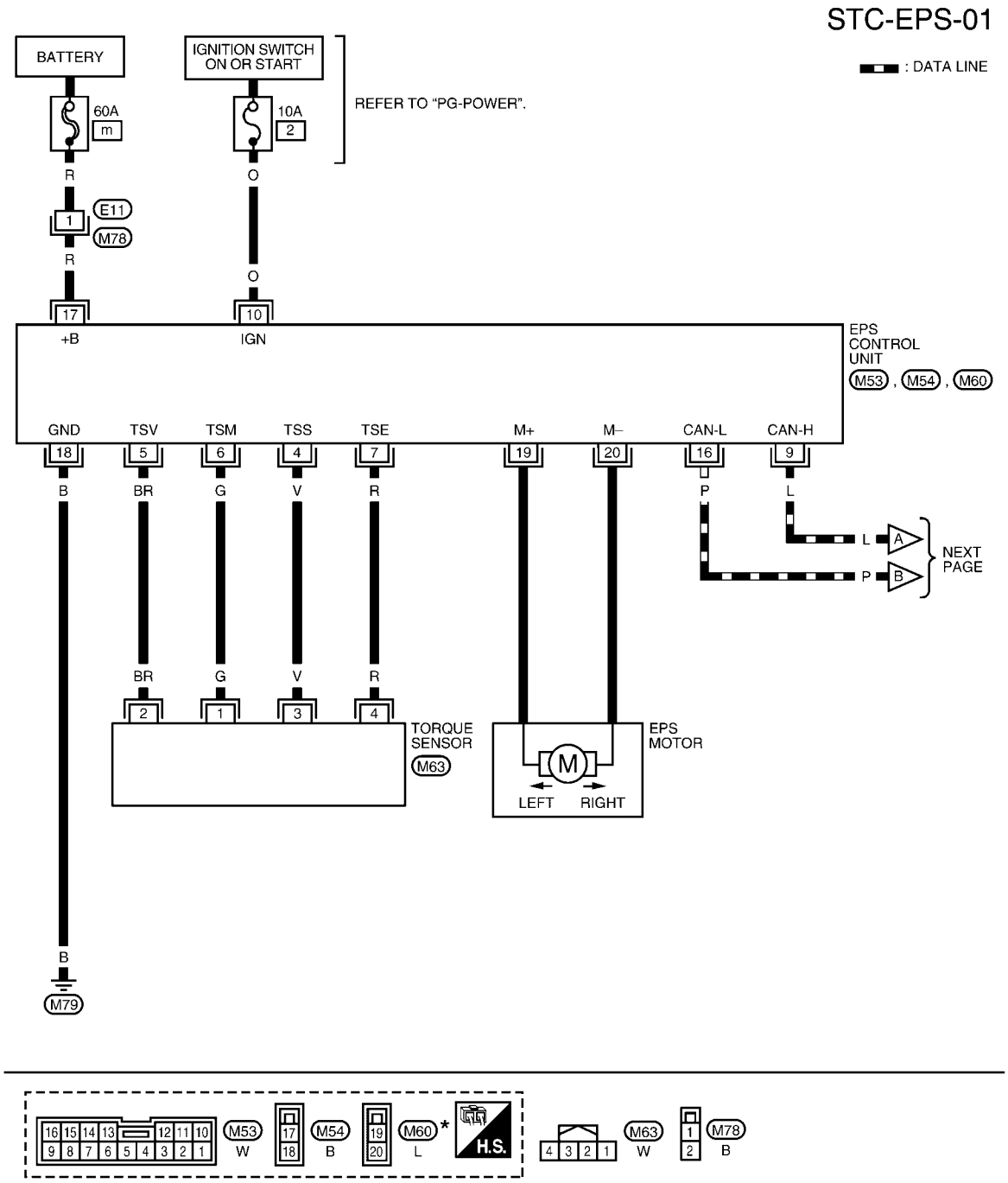

*: THIS CONNECTOR IS NOT SHOWN IN "HARNESS LAYOUT" OF PG SECTION.

BGWA0001E

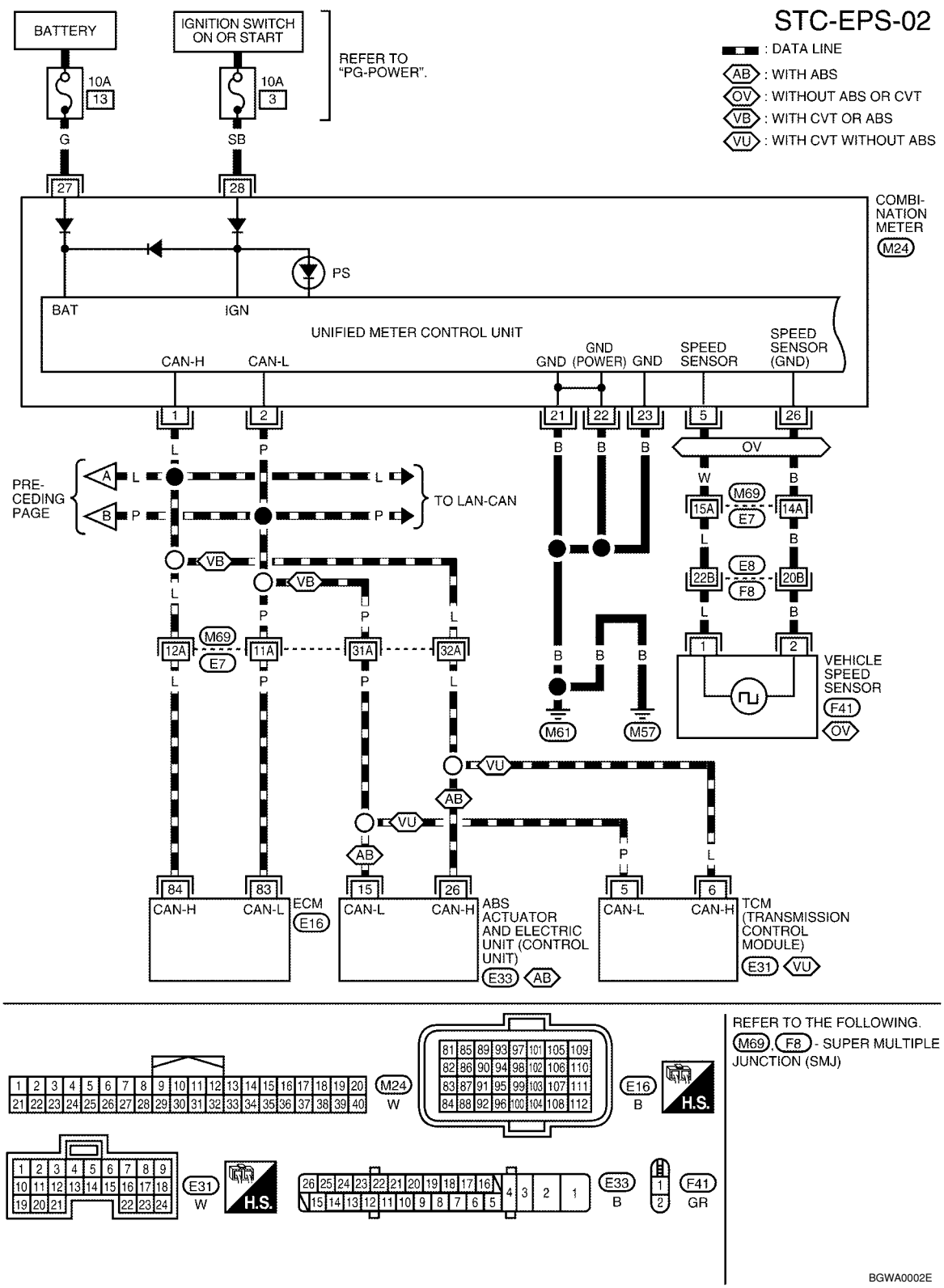

EPS Control Unit Input/Output Signal Reference Value

INFOID:0000000001703879

SPECIFICATIONS WITH CONSULT-III

CAUTION:

The output signal indicates the EPS control unit calculation date. The normal values will be displayed even in the event that the output circuit (harness) is open.

Monitor item (Unit)	Content	Condition		Display value
MOTOR VOL (V)	Power supply voltage for EPS control unit	Ignition switch: ON		Battery voltage
TORQUE SENSOR (Nm)	Steering wheel turning force	Engine running	Steering wheel: Not steering (There is no steering force)	0.00 Nm
			Steering wheel: Steering	0 – 8.19 Nm*1 (The value is changed according to steering left or right)
MOTOR SIG (A)	Command current to EPS motor	Engine running	Steering wheel: Not steering (There is no steering force)	0.00 A
			Steering wheel: Steering	0 – 65.00 A (The value is changed according to steering left or right)
MOTOR CURRENT (A)	Consumption current of EPS motor	Engine running	Steering wheel: Not steering (There is no steering force)	0.00 A
			Steering wheel: Steering	0 – 65.00 A*2 (The value is changed according to steering left or right)
VEHICLE SPEED (km/h) or (mph)	Vehicle speed	Vehicle stopped		0 km/h (0 mph)
		While driving		Approximately equal to the indication on speedometer (Inside of ±10%)*3
WARNING LAMP (ON/OFF)	EPS warning lamp condition	EPS warning lamp: ON		ON
		EPS warning lamp: OFF		OFF
DERATING STAT (ON/OFF)	Protect overload status	Engine running	Steering wheel: Normal steering	OFF
			Steering wheel: Steering over the stop	ON*4
ENGINE STATUS (RUN/STOP)	Engine status	Engine stopped (Engine speed: Less than 400 rpm)		STOP
		Engine running (Engine speed: 400 rpm or more)		RUN

*1 : In the front of the value, “L” is displayed at steering left and “R” is displayed at steering right.

*2 : Almost in accordance with the value of “MOTOR SIG”. It is not a malfunction though these values are not accorded when steering quickly.

*3 : It is not a malfunction, though it might not be corresponding just after ignition switch is turned ON.

*4 : It turns to OFF after waiting for a short period of time.

EPS Terminal and Reference Value

INFOID:0000000001703880

EPS HARNESS CONNECTOR TERMINAL LAYOUT

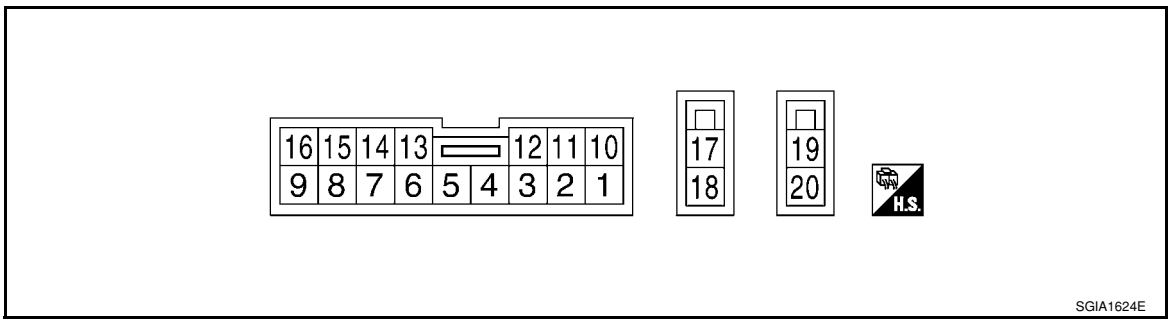

TERMINALS AND REFERENCE VALUES FOR EPS CONTROL UNIT

Data are reference values and are measured between each terminal and ground.

Terminal	Wire color	Item	Condition		Data (Approx.)
4	V	Torque sensor sub	Engine running	Steering wheel: Not steering (There in no steering force)	2.5 V
				Steering wheel: Steering	1.7 V – 3.3 V (The value is changed according to steering left or right)
5	BR	Torque sensor power supply	Ignition switch: ON		8 V
			Ignition switch: OFF		0 V
6	G	Torque sensor main	Engine running	Steering wheel: Not steering (There is no steering force)	2.5 V
				Steering wheel: Steering	1.7 V – 3.3 V (The value is changed according to steering left or right)
7	R	Torque sensor ground	Always		0 V
9	L	CAN-H	—		—
10	O	Power supply	Ignition switch: ON		Battery voltage
			Ignition switch: OFF		0 V
16	P	CAN-L	—		—
17	R	Power supply (Memory back-up)	Ignition switch: ON		Battery voltage
			Ignition switch: OFF		Battery voltage
18	B	Ground	Always		0 V
19	—	Motor (+)	—		—
20	—	Motor (–)	—		—

CAUTION:

When using a circuit tester to measure voltage for inspection, be sure not to extend forcibly any connector terminals.

CONSULT-III Function (EPS)

INFOID:0000000001703881

FUNCTION

CONSULT-III can display each diagnostic item using the diagnostic test modes shown following.

Diagnostic test mode	Function	Reference page
Self-diagnostic results	• Self-diagnostic results can be read and erased quickly.	"SELF-DIAG RESULTS MODE"
Data monitor	• Input/Output data in the EPS control unit can be read.	"DATA MONITOR"
CAN diagnostic support monitor	• The results of transmit/receive diagnosis of CAN communication can be read.	LAN-6
ECU part number	• EPS control unit part number can be read.	"EPS CONTROL UNIT PART NUMBER"

SELF-DIAG RESULTS MODE

Display Item List

Item (CONSULT-III screen terms)	Diagnostic item is detected when....	Check item
BATTERY VOLT [C1601]	When the power supply malfunction supplied to EPS control unit is detected.	STC-14, "DTC C1601 BATTERY VOLT"
TORQUE SENSOR [C1604]	When the torque sensor malfunction assembled in steering column assembly is detected.	STC-15, "DTC C1604 TORQUE SENSOR"
EPS MOTOR [C1606]	When the motor driver malfunction of EPS control unit or EPS motor malfunction is detected.	STC-16, "DTC C1606 EPS MOTOR"
EEPROM [C1607]	When the memory (EEPROM) system malfunction is detected in EPS control unit.	STC-17, "DTC C1607 EEPROM"
CONTROL UNIT [C1608]	When the internal malfunction is detected in EPS control unit.	STC-17, "DTC C1608 CONTROL UNIT"
CAN VHCL SPEED [C1609]	When the malfunction is detected in vehicle speed signal received with CAN communication.	STC-18, "DTC C1609 CAN VHCL SPEED"
CAN ENG RPM [C1610]	When the malfunction is detected in engine status signal received with CAN communication.	STC-19, "DTC C1610 CAN ENG RPM"
CAN COMM CIRCUIT [U1000]	When EPS control unit is not transmitting or receiving CAN communication signal 2 seconds or more.	STC-19, "DTC U1000 CAN COMM CIRCUIT"
NO DTC IS DETECTED. FURTHER TESTING MAY BE REQUIRED.	No NG item has been detected.	—

CAUTION:

If "CAN COMM CIRCUIT [U1000]" is displayed with other DTCs, first perform the trouble diagnosis for CAN communication line.

How to Erase Self-Diagnostic Results

1. Perform applicable inspection of malfunctioning item and then repair or replace.
2. Turn ignition switch "OFF" to erase memory.
3. Turn ignition switch "ON" and select "SELF-DIAG RESULTS" mode with CONSULT-III.
4. Touch "ERASE" on CONSULT-III screen to erase DTC memory.
   CAUTION:
   If memory cannot be erased, perform diagnosis.

DATA MONITOR

Display Item List

Monitor item (Unit)	Remarks
MOTOR VOL (V)	Power supply voltage for EPS control unit is displayed
TORQUE SENSOR (Nm)	Steering wheel turning force detected by torque sensor is displayed
MOTOR SIG (A)	Current commanded value to EPS motor is displayed
MOTOR CURRENT (A)	Current value consumed by EPS motor is displayed
VEHICLE SPEED (km/h) or (mph)	Vehicle speed is displayed from vehicle speed signal with CAN communication
WARNING LAMP (ON/OFF)	EPS warning lamp control status is displayed
DERATING STAT (ON/OFF)	Protect overload status is displayed
ENGINE STATUS (STOP/RUN)	Engine speed is displayed from engine status signal with CAN communication

EPS CONTROL UNIT PART NUMBER

Display a part number of EPS control unit carried by a vehicle.

Symptom Chart

INFOID:0000000001703882

If EPS warning lamp turns ON, perform self-diagnosis. Refer to STC-11, "CONSULT-III Function (EPS)" .

Symptom	Condition	Check item	Reference page
EPS warning lamp does not turn ON when ignition switch to “ON”. (EPS warning lamp check)	Ignition switch: ON	CAN communication line	STC-21
		Combination meter	
EPS warning lamp does not turn OFF for several seconds after starting the engine	Engine running	CAN communication line	STC-21
		Power supply and ground for EPS control unit	
		Torque sensor	
		EPS motor	
		Vehicle speed signal	
		Engine status signal	
		Combination meter	
Steering wheel turning force is heavy or light, while driving	• While driving • Steering wheel turning	CAN communication line	STC-22
		Vehicle speed signal	
		Engine status signal	
		EPS motor	
		Steering wheel turning force (Mechanical malfunction)	
Unbalance steering wheel turning force and return between right and left, while driving	• While driving • Steering wheel turning	Wheel alignment	STC-23
		Steering wheel turning force (Mechanical malfunction)	
Unbalance steering wheel turning force, while driving (Torque variation)	• While driving • Steering wheel turning	Steering column intermediate shaft installation condition	STC-24
		Steering wheel turning force (Mechanical malfunction)	

TROUBLE DIAGNOSIS FOR SYSTEM

DTC C1601 BATTERY VOLT

INFOID:0000000001703883

CONSULT-III REFERENCE VALUE IN DATA MONITOR MODE

Data are reference value.

Monitor item (Unit)	Content	Condition	Display value
MOTOR VOL (V)	Power supply voltage for EPS control unit	Ignition switch: ON	Battery voltage

TERMINALS AND REFERENCE VALUES FOR EPS CONTROL UNIT

Refer to STC-10, "EPS Terminal and Reference Value".

DIAGNOSTIC PROCEDURE

1. CHECK EPS CONTROL UNIT POWER SUPPLY CIRCUIT

1. Turn ignition switch “OFF”.
2. Disconnect EPS control unit harness connector.
3. Turn ignition switch “ON”. (Do not start engine.)
4. Check voltage between EPS control unit harness connector (A) terminals and ground.

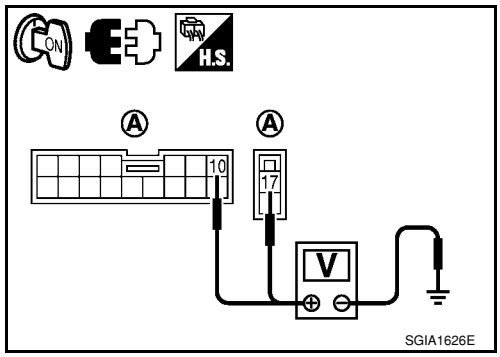

Connector	Terminal	Voltage
M53	10 – Ground	Battery voltage
M54	17 – Ground	Battery voltage

5. Turn ignition switch “OFF”.
6. Check voltage between EPS control unit harness connector (A) terminals and ground.

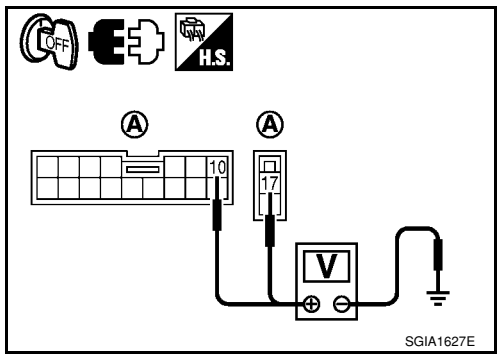

Connector	Terminal	Voltage
M53	10 – Ground	Approx. 0 V
M54	17 – Ground	Battery voltage

7. Connect EPS control unit harness connector.

OK or NG

OK >> GO TO 2.

NG >> Check the following. If any items are damaged, repair or replace damaged parts.
- 60 A fusible link (No. **m**, located in the fuse and fusible link block). Refer to PG-3.
- 10 A fuse [No. 2, located in the fuse block (J/B)]. Refer to PG-3.
- Harness for short or open between battery and EPS control unit harness connector M54 terminal 17.
- Harness for short or open between ignition switch and EPS control unit harness connector M53 terminal 10.

2. CHECK EPS CONTROL UNIT GROUND CIRCUIT

1. Turn ignition switch “OFF”.
2. Disconnect EPS control unit harness connector.

3. Check continuity between EPS control unit harness connector (A) terminal and ground.

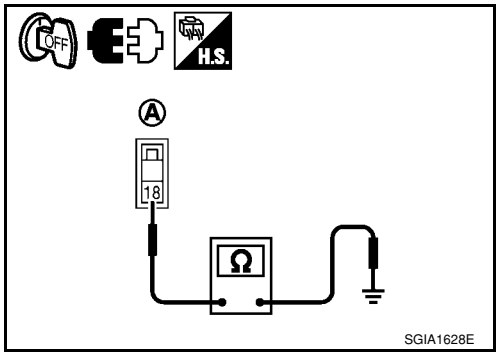

Connector	Terminal	Continuity
M54	18	Yes

Also check harness for short to power.
4. Connect EPS control unit harness connector.

OK or NG

OK >> GO TO 3.
NG >> Repair open circuit or short to ground or short to power in harness or connectors.

3. CHECK DTC

Start engine.

Does EPS warning lamp turn OFF?

YES >> **INSPECTION END**
NO >> Perform self-diagnosis, repair or replace damaged parts. Refer to STC-11, "CONSULT-III Function (EPS)".

DTC C1604 TORQUE SENSOR

INFOID:0000000001703884

CONSULT-III REFERENCE VALUE IN DATA MONITOR MODE

Data are reference value.

Monitor item (Unit)	Content	Condition		Display value
TORQUE SENSOR (Nm)	Steering wheel turning force	Engine running	Steering wheel: Not steering (There is no steering force)	0.00 Nm
			Steering wheel: Steering	0 – 8.19 Nm* (The value is changed according to steering left or right)

*: In the front of the value, “L” is displayed at steering left and “R” is displayed at steering right.

TERMINALS AND REFERENCE VALUES FOR EPS CONTROL UNIT

Refer to STC-10, "EPS Terminal and Reference Value".

DIAGNOSTIC PROCEDURE

1. CHECK TORQUE SENSOR SIGNAL

With CONSULT-III
1. Start engine.
2. Select “DATA MONITOR” mode for “EPS” with CONSULT-III.
3. Check the value of “TORQUE SENSOR”. Refer to STC-9, "EPS Control Unit Input/Output Signal Reference Value".

Without CONSULT-III
1. Start engine.
2. Check voltage between EPS control unit harness connector M53 terminals 4, 5, 6, 7 and ground. Refer to STC-10, "EPS Terminal and Reference Value".

OK or NG

OK >> GO TO 3.
NG >> GO TO 2.

2. CHECK HARNESS AND CONNECTOR

1. Turn ignition switch “OFF”.
2. Disconnect EPS control unit harness connector and torque sensor harness connector.

3. Check continuity between EPS control unit harness connector (A) M53 terminals 4, 5, 6, 7 and torque sensor harness connector (B) M63 terminals 1, 2, 3, 4.

Terminal	Continuity
4 – 3	Yes
5 – 2	
6 – 1	
7 – 4	

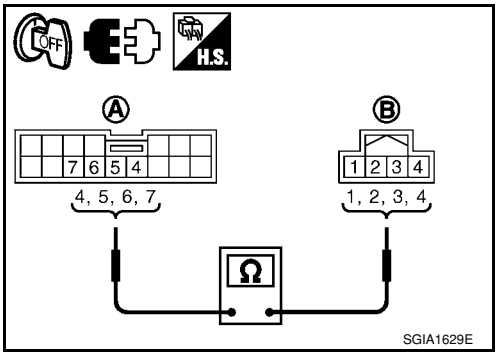

Also check harness for short to ground and short to power.

4. Connect EPS control unit harness connector and torque sensor harness connector.

OK or NG

OK >> GO TO 3.
NG >> Repair or replace damaged parts.

3. CHECK EPS CONTROL UNIT

Check EPS control unit input/output signal. Refer to STC-9, "EPS Control Unit Input/Output Signal Reference Value".

OK or NG

OK >> GO TO 4.
NG >> Check EPS control unit pin terminals for damage or loose connection with harness connector. If any items are damaged, repair or replace damaged parts.

4. CHECK DTC

Perform the self-diagnosis, after driving the vehicle for a while.

OK or NG

OK >> **INSPECTION END**
NG >> Torque sensor is malfunctioning. Replace steering column assembly. Refer to PS-9, "Removal and Installation".

DTC C1606 EPS MOTOR

INFOID:0000000001703885

CONSULT-III REFERENCE VALUE IN DATA MONITOR MODE

Data are reference value.

Monitor item (Unit)	Content	Condition		Display value
MOTOR SIG (A)	Command current to EPS motor	Engine running	Steering wheel: Not steering (There is no steering force)	0.00 A
			Steering wheel: Steering	0 – 65.00 A (The value is changed according to steering left or right)
MOTOR CURRENT (A)	Consumption current of EPS motor	Engine running	Steering wheel: Not steering (There is no steering force)	0.00 A
			Steering wheel: Steering	0 – 65.00 A* (The value is changed according to steering left or right)

* : Almost in accordance with the value of “MOTOR SIG”. It is not a malfunction though these values are not accorded when steering quickly.

TERMINALS AND REFERENCE VALUES FOR EPS CONTROL UNIT

Refer to STC-10, "EPS Terminal and Reference Value".

DIAGNOSTIC PROCEDURE

1. CHECK EPS MOTOR SIGNAL

With CONSULT-III

1. Start engine.
2. Select “DATA MONITOR” mode for “EPS” with CONSULT-III.
3. Check the values of “MOTOR SIG” and “MOTOR CURRENT”. Refer to STC-9, "EPS Control Unit Input/Output Signal Reference Value".

OK or NG

OK >> GO TO 3.
NG >> GO TO 2.

2. CHECK EPS MOTOR

1. Turn ignition switch “OFF”.
2. Disconnect EPS control unit harness connector.
3. Check resistance between EPS control unit harness connector (A) terminals.

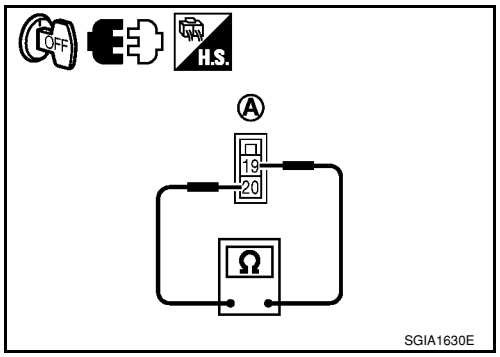

Connector	Terminal	Resistance
M60	19 – 20	Approx. 0.1 Ω or less

4. Connect EPS control unit harness connector.

OK or NG

OK >> GO TO 3.
NG >> EPS motor is malfunctioning. Replace steering column assembly. Refer to PS-9, "Removal and Installation".

3. CHECK EPS CONTROL UNIT

Check EPS control unit input/output signal. Refer to STC-9, "EPS Control Unit Input/Output Signal Reference Value".

OK or NG

OK >> GO TO 4.
NG >> Check EPS control unit pin terminals for damage or loose connection with harness connector. If any items are damaged, repair or replace damaged parts.

4. CHECK DTC

Perform the self-diagnosis, after driving the vehicle for a while.

OK or NG

OK >> **INSPECTION END**
NG >> GO TO 3.

DTC C1607 EEPROM

INFOID:0000000001703886

DIAGNOSTIC PROCEDURE

1. PERFORM SELF-DIAGNOSIS

With CONSULT-III

1. Turn ignition switch “ON”. (Do not start engine.)
2. Select “SELF-DIAG RESULTS” mode for “EPS” with CONSULT-III.
3. Touch “ERASE”.
4. Turn ignition switch “OFF”, and wait at least 10 seconds.
5. Start engine.
6. Perform the self-diagnosis again.

Is the “EEPROM [C1607]” displayed?

YES >> Replace EPS control unit. Refer to PS-9, "Removal and Installation".
NO >> **INSPECTION END**

DTC C1608 CONTROL UNIT

INFOID:0000000001703887

DIAGNOSTIC PROCEDURE

1. PERFORM SELF-DIAGNOSIS

With CONSULT-III

1. Turn ignition switch “ON”. (Do not start engine.)
2. Select “SELF-DIAG RESULTS” mode for “EPS” with CONSULT-III.
3. Touch “ERASE”.
4. Turn ignition switch “OFF”, and wait at least 10 seconds.
5. Start engine.
6. Perform the self-diagnosis again.

Is the “CONTROL UNIT [C1608]” displayed?

YES >> Replace EPS control unit. Refer to PS-9, "Removal and Installation".
NO >> **INSPECTION END**

DTC C1609 CAN VHCL SPEED

INFOID:0000000001703888

CONSULT-III REFERENCE VALUE IN DATA MONITOR MODE

Data are reference value.

Monitor item (Unit)	Content	Condition	Display value
VEHICLE SPEED (km/h) or (mph)	Vehicle speed	Vehicle stopped	0 km/h (0 mph)
		While driving	Approximately equal to the indication on speed-ometer (Inside of ±10%)

* : It is not a malfunction, though it might not be corresponding just after ignition switch is turned ON.

DIAGNOSTIC PROCEDURE

1. CHECK DTC WITH COMBINATION METER

Perform self-diagnosis with combination meter. Refer to DI-13, "CONSULT-III Function (METER/M&A)" .

Is any malfunction detected by self-diagnosis?

YES >> Check the malfunctioning system.
NO-1 >> With ABS: GO TO 2.
NO-2 >> Without ABS: GO TO 3.

2. CHECK DTC WITH ABS ACTUATOR AND ELECTRIC UNIT (CONTROL UNIT)

Perform self-diagnosis with ABS actuator and electric unit (control unit). Refer to BRC-18, "CONSULT-III Function (ABS)" .

Is any malfunction detected by self-diagnosis?

YES >> Check the malfunctioning system.
NO >> GO TO 4.

3. CHECK DTC WITH TRANSMISSON CONTROL MODULE (TCM)

Perform self-diagnosis with TCM. Refer to AT-73, "CONSULT-III Function (A/T)" .

Is any malfunction detected by self-diagnosis?

YES >> Check the malfunctioning system.
NO >> GO TO 4.

4. CHECK EPS CONTROL UNIT

Check EPS control unit input/output signal. Refer to STC-9, "EPS Control Unit Input/Output Signal Reference Value" .

OK or NG

OK >> GO TO 5.
NG >> Check EPS control unit pin terminals for damage or loose connection with harness connector. If any items are damaged, repair or replace damaged parts.

5. CHECK DTC

Perform the self-diagnosis, after driving the vehicle for a while.

OK or NG

OK >> **INSPECTION END**
NG >> Perform self-diagnosis with ABS actuator and electric unit (control unit) and combination meter. Refer to BRC-18, "CONSULT-III Function (ABS)" , DI-13, "CONSULT-III Function (METER/M&A)" .

DTC C1610 CAN ENG RPM

INFOID:0000000001703889

CONSULT-III REFERENCE VALUE IN DATA MONITOR MODE

Data are reference value.

Monitor item (Unit)	Content	Condition	Display value
ENGINE STATUS (RUN/STOP)	Engine status	Engine stopped (Engine speed: Less than 400 rpm)	STOP
		Engine running (Engine speed: 400 rpm or more)	RUN

DIAGNOSTIC PROCEDURE

1. CHECK DTC WITH ECM

Perform self-diagnosis with ECM. Refer to EC-109, "CONSULT-II Function (ENGINE)" .

Is any malfunction detected by self-diagnosis?

YES >> Check the malfunctioning system.
NO >> GO TO 2.

2. CHECK EPS CONTROL UNIT

Check EPS control unit input/output signal. Refer to STC-9, "EPS Control Unit Input/Output Signal Reference Value" .

OK or NG

OK >> GO TO 3.
NG >> Check EPS control unit pin terminals for damage or loose connection with harness connector. If any items are damaged, repair or replace damaged parts.

3. CHECK DTC

Perform the self-diagnosis, after driving a vehicle for a while.

OK or NG

OK >> **INSPECTION END**
NG >> Perform self-diagnosis with ECM again. Refer EC-109, "CONSULT-II Function (ENGINE)" .

DTC U1000 CAN COMM CIRCUIT

INFOID:0000000001703890

DIAGNOSTIC PROCEDURE

1. CHECK CAN COMMUNICATION CIRCUIT

With CONSULT-III

1. Turn ignition switch “ON” and start engine.
2. Select “SELF-DIAG RESULTS” mode for “EPS” with CONSULT-III.
3. Perform the self-diagnosis.

Is the “CAN COMM CIRCUIT [U1000]” displayed?

YES >> Print out CONSULT-III screen and go to LAN-15, "Trouble Diagnosis Flow Chart".
NO >> **INSPECTION END**

Component Inspection

INFOID:0000000001703891

EPS MOTOR

1. Turn ignition switch “OFF”.
2. Disconnect EPS control unit harness connector.

3. Check resistance between EPS control unit harness connector (A) terminals.

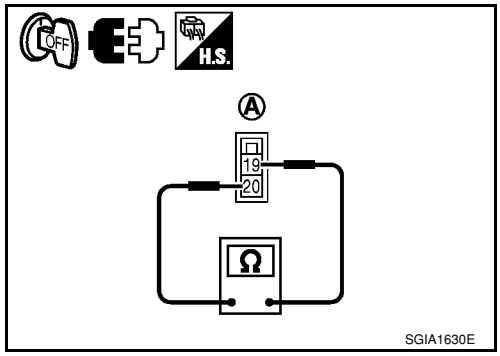

Connector	Terminal	Resistance
M60	19 – 20	Approx. 0.1 Ω or less

4. If NG, replace the steering column assembly. Refer to PS-9, "Removal and Installation".

TROUBLE DIAGNOSIS FOR SYMPTOMS

EPS Warning Lamp Does Not Turn ON

INFOID:0000000001703892

SYMPTOM:

EPS warning lamp does not turn ON when ignition switch to “ON”.

DIAGNOSTIC PROCEDURE

1. CHECK SYSTEM FOR CAN COMMUNICATION LINE

Perform self-diagnosis. Refer to STC-11, "CONSULT-III Function (EPS)" .

Is the “CAN COMM CIRCUIT [U1000]” displayed?

YES >> Perform trouble diagnosis for CAN communication line. Refer to STC-19, "DTC U1000 CAN COMM CIRCUIT" .

NO >> GO TO 2.

2. CHECK EPS CONTROL UNIT

Check EPS control unit input/output signal. Refer to STC-9, "EPS Control Unit Input/Output Signal Reference Value" .

OK or NG

OK >> GO TO 3.

NG >> Check EPS control unit pin terminals for damage or loose connection with harness connector. If any items are damaged, repair or replace damaged parts.

3. SYMPTOM CHECK

Check again.

OK or NG

OK >> **INSPECTION END**

NG >> Replace combination meter. Refer to DI-20, "Removal and Installation" .

EPS Warning Lamp Does Not Turn OFF

INFOID:0000000001703893

SYMPTOM:

EPS warning lamp does not turn OFF for several seconds after starting the engine.

DIAGNOSTIC PROCEDURE

1. CHECK SELF-DIAGNOSTIC RESULTS

Perform self-diagnosis. Refer to STC-11, "CONSULT-III Function (EPS)" .

Is any malfunction detected by self-diagnosis?

YES >> Check the malfunctioning system.

NO >> GO TO 2.

2. CHECK EPS CONTROL UNIT POWER SUPPLY CIRCUIT

1. Turn ignition switch “OFF”.
2. Disconnect EPS control unit harness connector.
3. Turn ignition switch “ON”. (Do not start engine.)
4. Check voltage between EPS control unit harness connector (A) terminals and ground.

Connector	Terminal	Voltage
M53	10 – Ground	Battery voltage
M54	17 – Ground	Battery voltage

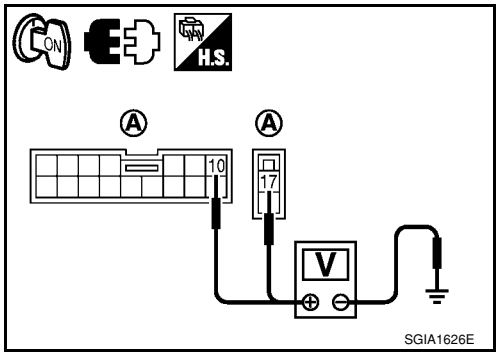

5. Turn ignition switch “OFF”.
6. Check voltage between EPS control unit harness connector (A) terminals and ground.

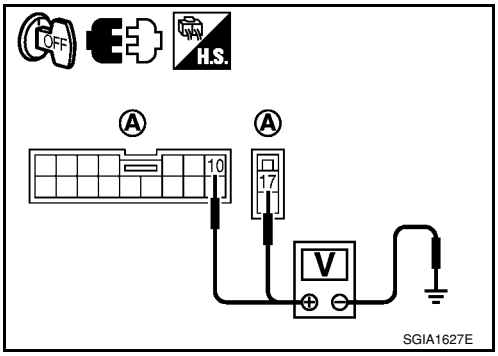

Connector	Terminal	Voltage
M53	10 – Ground	Approx. 0 V
M54	17 – Ground	Battery voltage

7. Connect EPS control unit harness connector.

OK or NG

OK >> GO TO 3.
NG >> Check the following. If any items are damaged, repair or replace damaged parts.
- 60 A fusible link (No. **m**, located in the fuse and fusible link block). Refer to PG-3 .
- 10 A fuse [No. 2, located in the fuse block (J/B)]. Refer to PG-3 .
- Harness for short or open between battery and EPS control unit harness connector M54 terminal 17.
- Harness for short or open between ignition switch and EPS control unit harness connector M53 terminal 10.

3. CHECK EPS CONTROL UNIT GROUND CIRCUIT

1. Turn ignition switch “OFF”.
2. Disconnect EPS control unit harness connector.
3. Check continuity between EPS control unit harness connector (A) terminal and ground.

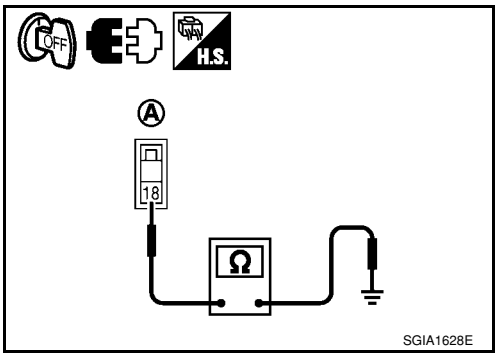

Connector	Terminal	Continuity
M54	18	YES

Also check harness for short to power.
4. Connect EPS control unit harness connector.

OK or NG

OK >> GO TO 4.
NG >> Repair open circuit or short to ground or short to power in harness or connectors.

4. CHECK EPS CONTROL UNIT

Check EPS control unit input/output signal. Refer to STC-9, "EPS Control Unit Input/Output Signal Reference Value" .

OK or NG

OK >> GO TO 5.
NG >> Check EPS control unit pin terminals for damage or loose connection with harness connector. If any items are damaged, repair or replace damaged parts.

5. SYMPTOM CHECK

Check again.

OK or NG

OK >> **INSPECTION END**
NG >> Replace combination meter. Refer to DI-20, "Removal and Installation" .

Steering Wheel Turning Force Is Heavy or Light

INFOID:0000000001703894

SYMPTOM:

Steering wheel turning force is heavy or light, while driving.

DIAGNOSTIC PROCEDURE

1. CHECK SYSTEM FOR CAN COMMUNICATION LINE

Perform self-diagnosis. Refer to STC-11, "CONSULT-III Function (EPS)" .

Is the “CAN COMM CIRCUIT [U1000]” displayed?

YES >> Perform trouble diagnosis for CAN communication line. Refer to STC-19, "DTC U1000 CAN COMM CIRCUIT" .
NO-1 >> With ABS: GO TO 2.
NO-2 >> Without ABS: GO TO 3.

2. CHECK VEHICLE SPEED SIGNAL FROM ABS ACTUATOR AND ELECTRIC UNIT (CONTROL UNIT)

Perform self-diagnosis with ABS actuator and electric unit (control unit). Refer to BRC-18, "CONSULT-III Function (ABS)" .

Is any malfunction detected by self-diagnosis?

YES >> Check the malfunctioning system.
NO >> GO TO 4.

3. CHECK VEHICLE SPEED SIGNAL FROM TRANSMISSON CONTROL MODULE (TCM)

Perform self-diagnosis with TCM. Refer to AT-73, "CONSULT-III Function (A/T)" .

Is any malfunction detected by self-diagnosis?

YES >> Check the malfunctioning system.
NO >> GO TO 4.

4. CHECK COMBINATION METER SIGNAL

Perform self-diagnosis with combination meter. Refer to DI-13, "CONSULT-III Function (METER/M&A)" .

Is any malfunction detected by self-diagnosis?

YES >> Check the malfunctioning system.
NO >> GO TO 5.

5. CHECK ENGINE STATUS SIGNAL

Perform self-diagnosis for ECM. Refer to EC-109, "CONSULT-II Function (ENGINE)" .

Is any malfunction detected by self-diagnosis?

YES >> Check the malfunctioning system.
NO >> GO TO 6.

6. CHECK EPS MOTOR SYSTEM

Perform trouble diagnosis for EPS motor. Refer to STC-16, "DTC C1606 EPS MOTOR" .

OK or NG

OK >> GO TO 7.
NG >> Repair or replace damaged parts.

7. CHECK EPS CONTROL UNIT

Check EPS control unit input/output signal. Refer to STC-9, "EPS Control Unit Input/Output Signal Reference Value" .

OK or NG

OK >> GO TO 8.
NG >> Check EPS control unit pin terminals for damage or loose connection with harness connector. If any items are damaged, repair or replace damaged parts.

8. SYMPTOM CHECK

Check again.

OK or NG

OK >> **INSPECTION END**
NG >> Check the steering wheel turning force because there may be mechanical malfunction. Refer to PS-6, "On-Vehicle Inspection and Service" .

Unbalance Steering Wheel Turning Force and Return Between Right and Left

INFOID:0000000001703895

SYMPTOM:

Unbalance steering wheel turning force and return between right and left, while driving.

DIAGNOSTIC PROCEDURE

1.CHECK EPS WARNING LAMP

Confirm EPS warning lamp during engine running.

Does EPS warning lamp turn OFF?

YES >> GO TO 2.
NO >> Go to STC-21, "EPS Warning Lamp Does Not Turn OFF" .

2.CHECK WHEEL ALIGNMENT

Check wheel alignment. Refer to FSU-6, "Wheel Alignment Inspection" .

OK or NG

OK >> GO TO 3.
NG >> Adjust wheel alignment. Refer to FSU-6, "Wheel Alignment Inspection" .

3.CHECK EPS CONTROL UNIT

Check EPS control unit input/output signal. Refer to STC-9, "EPS Control Unit Input/Output Signal Reference Value" .

OK or NG

OK >> GO TO 4.
NG >> Check EPS control unit pin terminals for damage or loose connection with harness connector. If any items are damaged, repair or replace damaged parts.

4.SYMPTOM CHECK

Check again.

OK or NG

OK >> **INSPECTION END**
NG >> Check the steering wheel turning force because there may be mechanical malfunction. Refer to PS-6, "On-Vehicle Inspection and Service" .

Unbalance Steering Wheel Turning Force (Torque Variation)

INFOID:0000000001703896

SYMPTOM:

Unbalance steering wheel turning force, while driving (Torque variation).

DIAGNOSTIC PROCEDURE

1.CHECK EPS WARNING LAMP

Confirm EPS warning lamp during engine running.

Does EPS warning lamp turn OFF?

YES >> GO TO 2.
NO >> Go to STC-21, "EPS Warning Lamp Does Not Turn OFF" .

2.CHECK STEERING COLUMN INTERMEDIATE SHAFT

Check the connection between intermediate shaft and the mounting part of steering column assembly and steering gear assembly. Refer to PS-9, "Removal and Installation" .

OK or NG

OK >> GO TO 3.
NG >> Repair or replace damaged parts.

3.CHECK EPS CONTROL UNIT

Check EPS control unit input/output signal. Refer to STC-9, "EPS Control Unit Input/Output Signal Reference Value" .

OK or NG

OK >> GO TO 4.
NG >> Check EPS control unit pin terminals for damage or loose connection with harness connector. If any items are damaged, repair or replace damaged parts.

4.SYMPTOM CHECK

Check again.

OK or NG

OK >> **INSPECTION END**

NG >> Check the steering wheel turning force because there may be mechanical malfunction. Refer to PS-6, "On-Vehicle Inspection and Service" .

SECTION WT
ROAD WHEELS & TIRES

CONTENTS

SERVICE INFORMATION 2

PRECAUTIONS 2
Precaution for Supplemental Restraint System (SRS) "AIR BAG" and "SEAT BELT PRE-TENSIONER" 2

PREPARATION 3
Special Service Tool 3
Commercial Service Tool 3

NOISE, VIBRATION AND HARSHNESS (NVH) TROUBLESHOOTING 4
NVH Troubleshooting Chart 4

ROAD WHEEL 5
Inspection 5

ROAD WHEEL TIRE ASSEMBLY 6
Balancing Wheels 6
Rotation 6

TIRE PRESSURE MONITORING SYSTEM 7
System Component 7
System Description 7

CAN COMMUNICATION 9
System Description 9

TROUBLE DIAGNOSES 10
Wiring Diagram- T/WARN - 10
Terminal and Reference Value for BCM 10
ID Registration Procedure 11
Transmitter Wake Up Operation 12
CONSULT-III Function (BCM) 12
How to Perform Trouble Diagnosis for Quick and Accurate Repair 13
Preliminary Check 14
Self-Diagnosis 15
Flash Code/Symptom Chart 16

TROUBLE DIAGNOSIS FOR SELF-DIAGNOSTIC ITEMS 18
Data from Transmitter Not Being Received 18
Transmitter Malfunction 18
Transmitter Pressure Malfunction 19
Vehicle Speed Signal 19

TROUBLE DIAGNOSIS FOR SYMPTOMS 20
Low Tire Pressure Warning Lamp Does Not Come On When Ignition Switch Is Turned On 20
Low Tire Pressure Warning Lamp Stays On When Ignition Switch Is Turned On 20
Low Tire Pressure Warning Lamp Flashes When Ignition Switch Is Turned On 21
Hazard Warning Lamps Flash When Ignition Switch Is Turned On 22
ID Registration Cannot Be Completed 22

REMOVAL AND INSTALLATION 23
Transmitter (Pressure Sensor) 23

SERVICE DATA AND SPECIFICATIONS (SDS) 25
Road Wheel 25
Tire 25

SERVICE INFORMATION

PRECAUTIONS

Precaution for Supplemental Restraint System (SRS) "AIR BAG" and "SEAT BELT PRE-TENSIONER"

INFOID:0000000001703744

The Supplemental Restraint System such as “AIR BAG” and “SEAT BELT PRE-TENSIONER”, used along with a front seat belt, helps to reduce the risk or severity of injury to the driver and front passenger for certain types of collision. This system includes seat belt switch inputs and dual stage front air bag modules. The SRS system uses the seat belt switches to determine the front air bag deployment, and may only deploy one front air bag, depending on the severity of a collision and whether the front occupants are belted or unbelted.
Information necessary to service the system safely is included in the SRS and SB section of this Service Manual.

WARNING:

- **To avoid rendering the SRS inoperative, which could increase the risk of personal injury or death in the event of a collision which would result in air bag inflation, all maintenance must be performed by an authorized NISSAN/INFINITI dealer.**
- **Improper maintenance, including incorrect removal and installation of the SRS, can lead to personal injury caused by unintentional activation of the system. For removal of Spiral Cable and Air Bag Module, see the SRS section.**
- **Do not use electrical test equipment on any circuit related to the SRS unless instructed to in this Service Manual. SRS wiring harnesses can be identified by yellow and/or orange harnesses or harness connectors.**

PREPARATION

Special Service Tool

INFOID:0000000001703745

The actual shapes of Kent-Moore tools may differ from those of special service tools illustrated here.

Tool number (Kent-Moore No.) Tool name	Description
KV991B1000 (J-45295) Transmitter activation tool 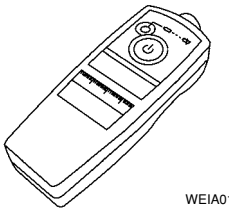 WEIA0144E	• Transmitter wake up operation • ID registration procedure

Commercial Service Tool

INFOID:0000000001703746

Tool name	Description
Power tool 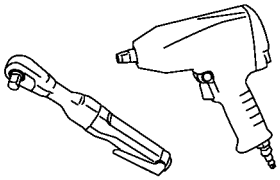 PBIC0190E	Removing wheel nuts

NOISE, VIBRATION AND HARSHNESS (NVH) TROUBLESHOOTING

NVH Troubleshooting Chart

INFOID:0000000001703747

Use the chart below to help you find the cause of the symptom. If necessary, repair or replace these parts.

Possible cause and SUSPECTED PARTS			Improper installation, looseness	Out-of-round	Imbalance	Incorrect tire pressure	Uneven tire wear	Deformation or damage	Non-uniformity	Incorrect tire size	FRONT AXLE AND FRONT SUSPENSION	REAR AXLE AND REAR SUSPENSION	TIRES	ROAD WHEELS	DRIVE SHAFT	BRAKE	STEERING
Reference page			FAX-5	WT-5	WT-6	WT-25	–	–	–	–	FAX-4, "NVH Troubleshooting Chart", FSU-5, "NVH Troubleshooting Chart"	RAX-3, "NVH Troubleshooting Chart", RSU-4, "NVH Troubleshooting Chart"	Refer to TIRES in this chart	Refer to ROAD WHEEL in this chart	FAX-4, "NVH Troubleshooting Chart"	BR-4, "NVH Troubleshooting Chart"	PS-5, "NVH Troubleshooting Chart"
Symptom	TIRES	Noise	×	×	×	×	×	×	×		×	×		×	×	×	×
		Shake	×	×	×	×	×	×		×	×	×		×	×	×	×
		Vibration				×				×	×	×			×		×
		Shimmy	×	×	×	×	×	×	×	×	×	×		×		×	×
		Shudder	×	×	×	×	×	×		×	×	×		×		×	×
		Poor quality ride or handling	×	×	×	×	×	×		×	×	×		×			
	ROAD WHEEL	Noise	×	×	×			×			×	×	×		×	×	×
		Shake	×	×	×			×			×	×	×		×	×	×
		Shimmy, Shudder	×	×	×			×			×	×	×			×	×
		Poor quality ride or handling	×	×	×			×			×	×	×				

×: Applicable

ROAD WHEEL

Inspection

INFOID:0000000001703748

ALUMINUM WHEEL

1. Check tires for wear and improper inflation.
2. Check wheels for deformation, cracks and other damage. If deformed, remove wheel and check wheel runout.

a. Remove tire from aluminum wheel and mount on a tire balance machine.

b. Set dial indicator as shown.

Wheel runout (Dial indicator value) **: Refer to WT-25, "Road Wheel".**

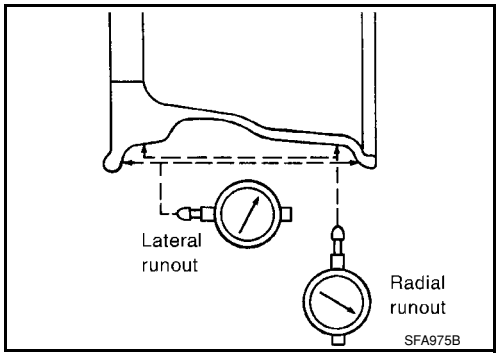

STEEL WHEEL

1. Check tires for wear and improper inflation.
2. Check wheels for deformation, cracks and other damage. If deformed, remove wheel and check wheel runout.

a. Remove tire from steel wheel and mount on a tire balance machine.

b. Set two dial indicators as shown.

c. Set each dial indicator to 0.

d. Rotate wheel and check dial indicators at several points around the circumference of the wheel.

e. Calculate runout at each point as shown.

Radial runout = (A+B)/2

Lateral runout = (C+D)/2

f. Select maximum positive runout value and the maximum negative value.
Add the two values to determine total runout. In case a positive or negative value is not available, use the maximum value (negative or positive) for total runout. If the total runout value exceeds the limit, replace steel wheel.

Wheel runout **: Refer to WT-25, "Road Wheel".**

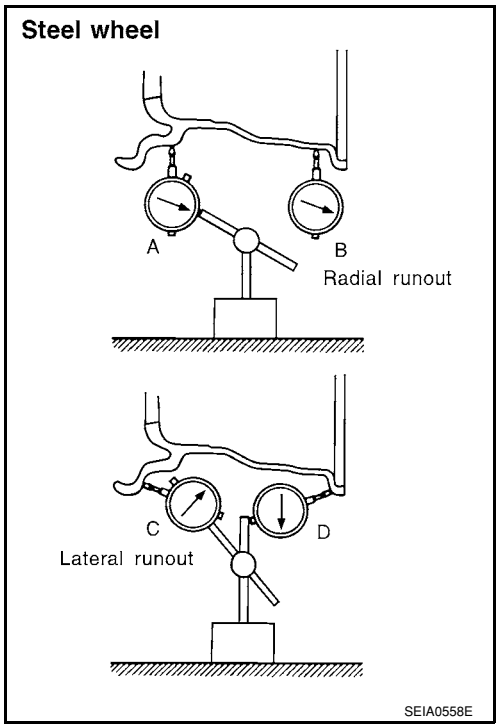

ROAD WHEEL TIRE ASSEMBLY

Balancing Wheels

INFOID:0000000001703749

Adjust wheel balance using road wheel center.

CAUTION:

- **Be careful not to scratch the road wheel during removal.**
- **Use clip-on type wheel balance weights only.**

Wheel balance (Maximum allowable unbalance):

Maximum allowable unbalance	Dynamic (At rim flange)	Less than 5 g (0.18 oz) (one side)
	Static (At rim flange)	Less than 10 g (0.35 oz)

Rotation

INFOID:0000000001703750

- Follow the maintenance schedule for tire rotation service intervals. Refer to MA-6.
- Do not include the T-type spare tire when rotating tires.

  CAUTION:
  - **When installing wheels, tighten them diagonally by dividing the work two to three times in order to prevent the wheels from developing any distortion.**
  - **Be careful not to tighten wheel nut at torque exceeding the specification to prevent damage of disc rotor.**

  Wheel nut : 113 N·m (12 kg-m, 83 ft-lb)

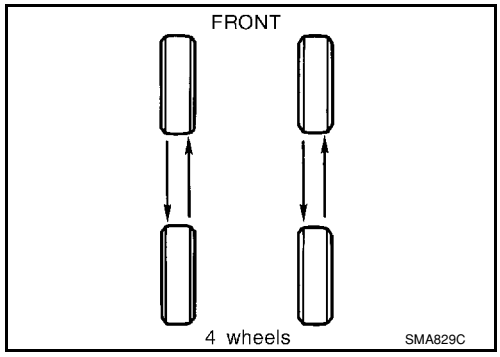

TIRE PRESSURE MONITORING SYSTEM

System Component

INFOID:0000000001703751

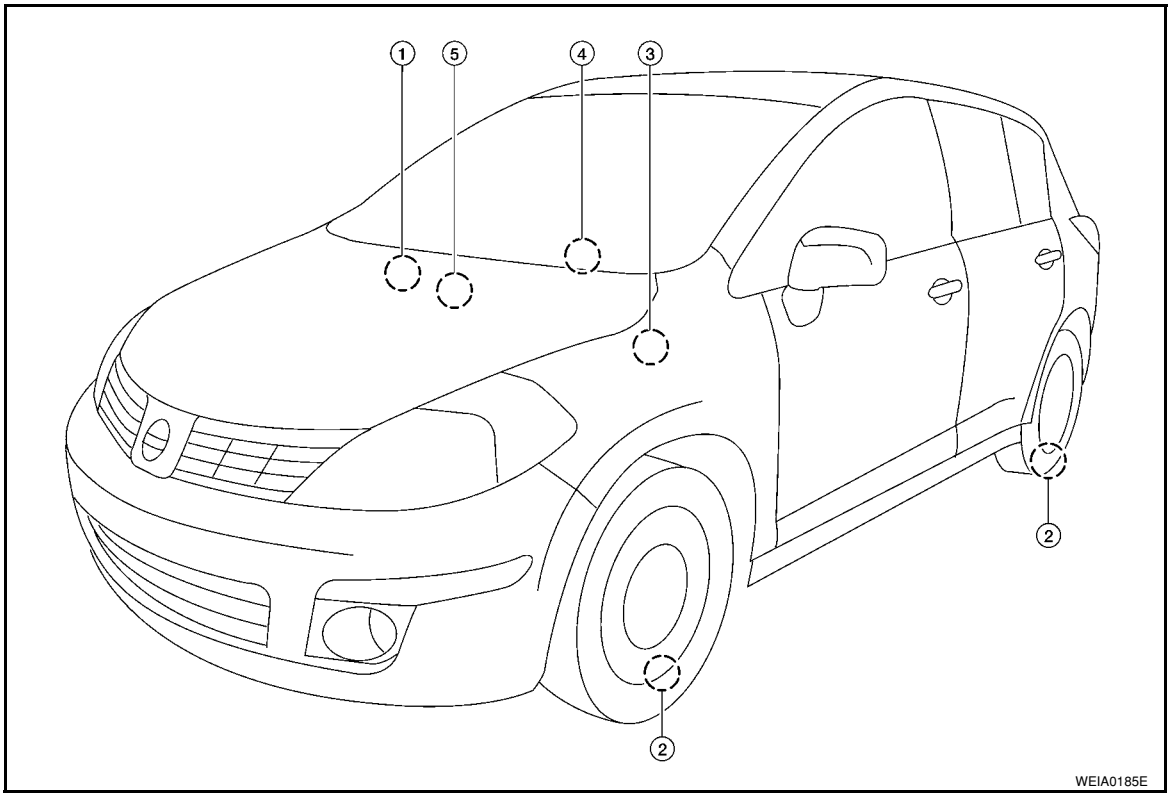

1. BCM
   M18, M20
2. Transmitters
3. Tire pressure warning check connector
   M39
4. Combination meter
   M24
5. Remote keyless entry receiver
   M23

System Description

INFOID:0000000001703752

BODY CONTROL MODULE (BCM)

The BCM is shown with the glove box removed. The BCM reads the air pressure signal received by the remote keyless entry receiver, and controls the low tire pressure warning lamp as shown below. It also has a self-diagnosis function to detect a system malfunction.

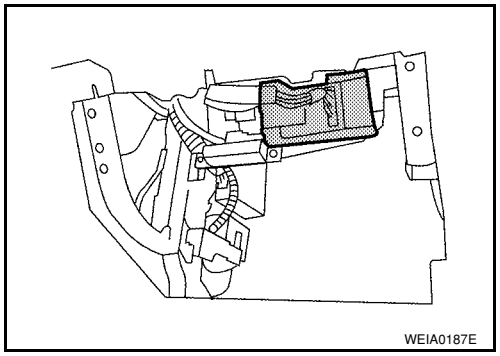

Condition	Low tire pressure warning lamp
System normal	On for 1 second after ignition ON
Tire less than 193 kPa (2.0 kg/cm^2 , 28 psi) [Flat tire]	ON
Tire pressure monitoring system malfunction	After key ON, flashes once per second for 1 minute, then stays ON

TRANSMITTER

A sensor-transmitter integrated with a valve is installed in each wheel, and transmits a detected air pressure signal in the form of a radio wave. The radio signal is received by the remote keyless entry receiver.

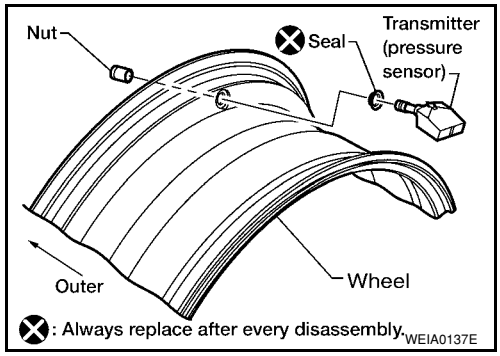

REMOTE KEYLESS ENTRY RECEIVER

The remote keyless entry receiver is shown with the glove box removed. The remote keyless entry receiver receives the air pressure signal transmitted by the transmitter in each wheel.

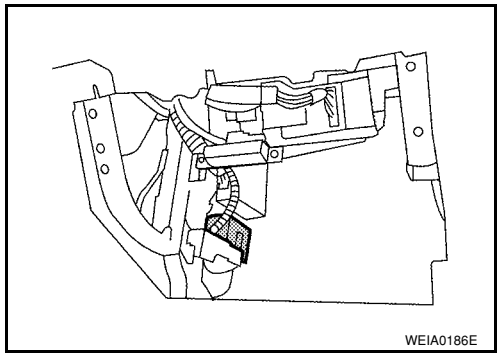

COMBINATION METER

The combination meter receives tire pressure status from the BCM using CAN communication. When a low tire pressure condition is sensed by the BCM, the combination meter low tire pressure warning lamp is activated.

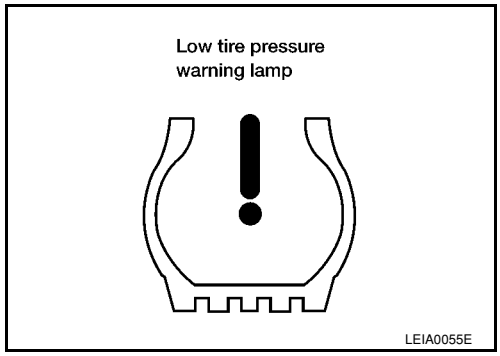

CAN COMMUNICATION

System Description

INFOID:0000000001703753

Refer to LAN-6.

TROUBLE DIAGNOSES

Wiring Diagram- T/WARN -

INFOID:0000000001703754

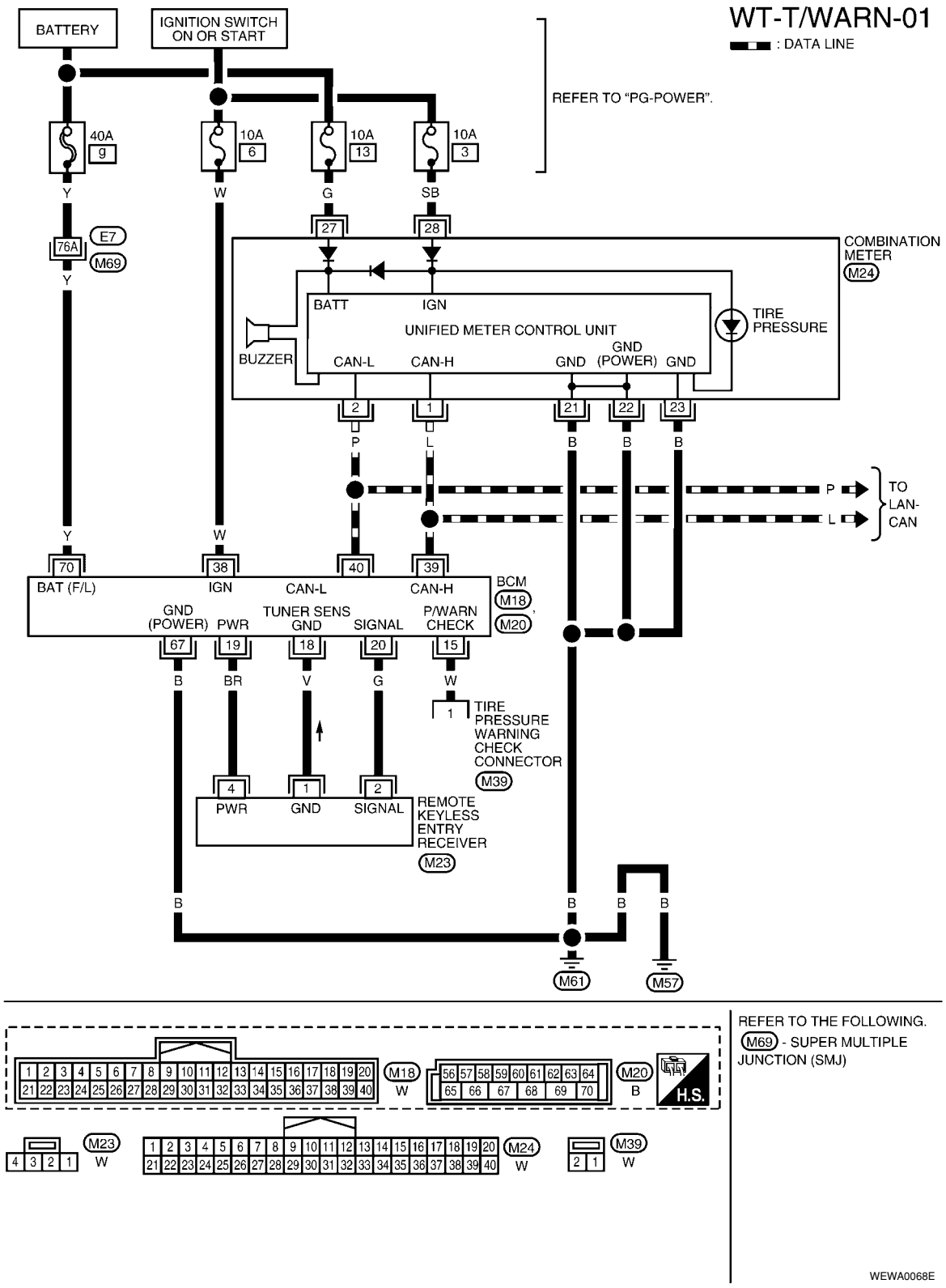

Terminal and Reference Value for BCM

INFOID:0000000001703755

Refer to BCS-11, "Terminal and Reference Value for BCM" .

ID Registration Procedure

INFOID:0000000001703756

ID REGISTRATION WITH TRANSMITTER ACTIVATION TOOL

NOTE:
This procedure must be done after replacement of a low tire pressure warning transmitter or BCM. New replacement transmitters are provided "asleep" and must first be "woken up" using Transmitter Activation Tool J-45295 before ID registration can be performed.

1. Connect CONSULT-III.
2. Select “AIR PRESSURE MONITOR” on "SELECT TEST ITEM" screen.
3. Select “WORK SUPPORT” on "SELECT DIAG MODE" screen, and select "ID REGIST".
4. Push the transmitter activation tool against the tire near the front left transmitter. Press the button for 5 seconds.

Tool number : (J-45295)

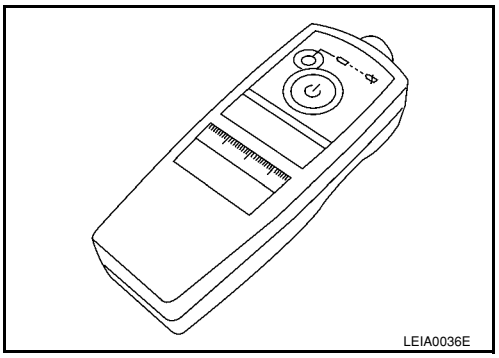

5. Register the IDs in order from FR LH, FR RH, RR RH and RR LH. When ID registration of each wheel has been completed, a buzzer sounds and the hazard warning lamps flash.

Activation tire position		Buzzer	Hazard warning lamp	CONSULT-III
1	Front LH	Once	2 times flashing	“YET” ↓ “DONE”
2	Front RH	2 times		
3	Rear RH	3 times		
4	Rear LH	4 times		

6. After completing all ID registrations, press “END” to complete the procedure.

NOTE:
Be sure to register the IDs in order from FR LH, FR RH, RR RH, to RR LH, or the self-diagnostic results display will not function properly.

ID REGISTRATION WITHOUT TRANSMITTER ACTIVATION TOOL

NOTE:
This procedure must be done after replacement of a low tire pressure warning transmitter or BCM. New replacement transmitters are provided "asleep" and must first be "woken up" using Transmitter Activation Tool J-45295 before ID registration can be performed.

1. Connect CONSULT-III.
2. Select “AIR PRESSURE MONITOR” on “SELECT TEST ITEM" screen.
3. Select “WORK SUPPORT” on “SELECT DIAG MODE" screen, and select "ID REGIST".
4. Adjust the tire pressure to the values shown in the table below and drive the vehicle at 15 km/h (9.4 MPH) or more for a few minutes.

Tire position	Tire pressure kPa (kg/cm^2 , psi)
Front – Left	250 (2.5, 36)
Front – Right	230 (2.3, 33)
Rear – Right	210 (2.1, 30)
Rear – Left	190 (1.9, 27)

5. After completing all ID registrations, press “END” to complete the procedure.

Activation tire position	CONSULT-III
Front LH	"YET" ↓ "DONE"
Front RH	
Rear RH	
Rear LH	

6. Inflate all tires to proper pressure. Refer to WT-25, "Tire" .

Transmitter Wake Up Operation

INFOID:0000000001703757

NOTE:
This procedure must be done after replacement of a low tire pressure warning transmitter or BCM. New replacement transmitters are provided "asleep" and must first be "woken up" using Transmitter Activation Tool J-45295 before ID registration can be performed.

1. Turn ignition switch ON. Push the transmitter activation tool against the tire near the front left transmitter. Press the button for 5 seconds. The hazard warning lamps flash per the diagram below.

   Tool number : (J-45295)

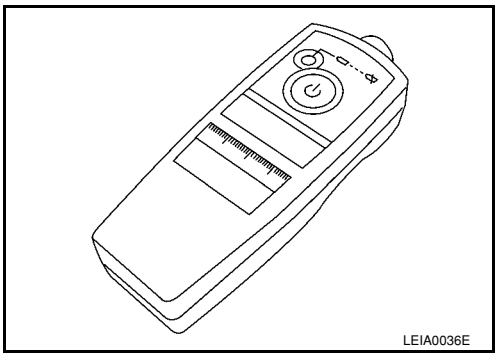

2. Repeat this procedure for each tire in the following order: FL, FR, RR, RL.
3. When the BCM finishes assigning each tire ID, the BCM flashes the hazard warning lamps and sends flashing indicator status by CAN according to the following time chart.

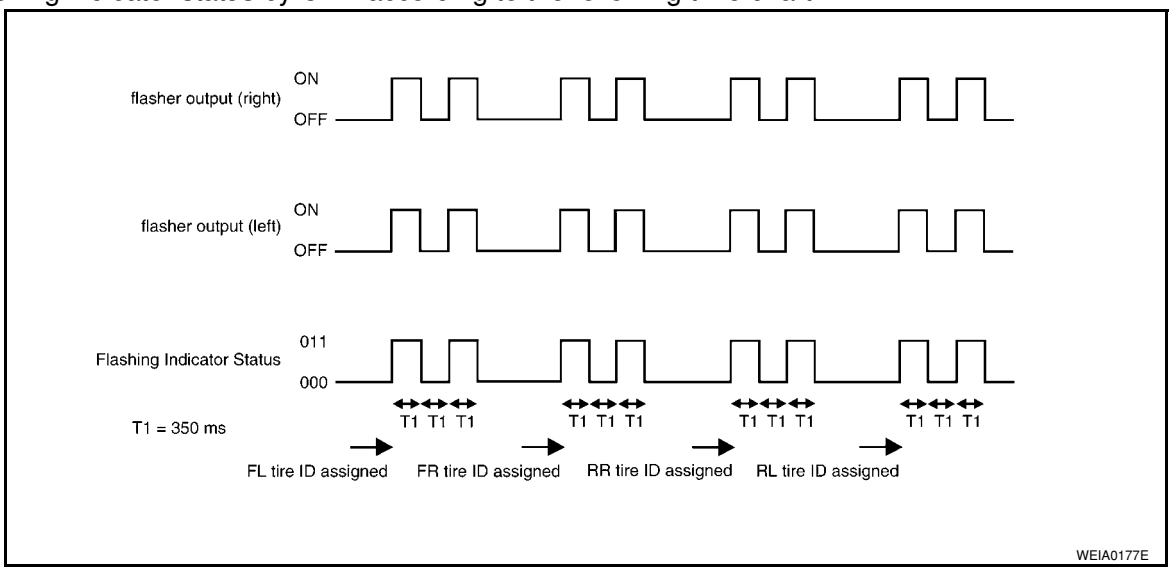

4. After completing wake up of all transmitters, make sure low tire pressure warning lamp goes out.

CONSULT-III Function (BCM)

INFOID:0000000001703758

CONSULT-III can display each diagnostic item using the diagnostic test modes shown following.

BCM diagnostic test item	Diagnostic mode	Description
Inspection by part	WORK SUPPORT	Supports inspections and adjustments. Commands are transmitted to the BCM for setting the status suitable for required operation, input/output signals are received from the BCM and received data is displayed.
	DATA MONITOR	Displays BCM input/output data in real time.
	ACTIVE TEST	Operation of electrical loads can be checked by sending drive signal to them.
	SELF-DIAG RESULTS	Displays BCM self-diagnosis results.
	CAN DIAG SUPPORT MNTR	The result of transmit/receive diagnosis of CAN communication can be read.
	ECU PART NUMBER	BCM part number can be read.
	CONFIGURATION	Performs BCM configuration read/write functions.

How to Perform Trouble Diagnosis for Quick and Accurate Repair

INFOID:0000000001703759

INTRODUCTION

- Before troubleshooting, verify customer complaints.
- If a vehicle malfunction is difficult to reproduce, harnesses, harness connectors or terminals may be malfunctioning. Hold and shake these parts to make sure they are securely connected.
- When using a circuit tester to measure voltage or resistance of each circuit, be careful not to damage or deform connector terminals.

WORK FLOW

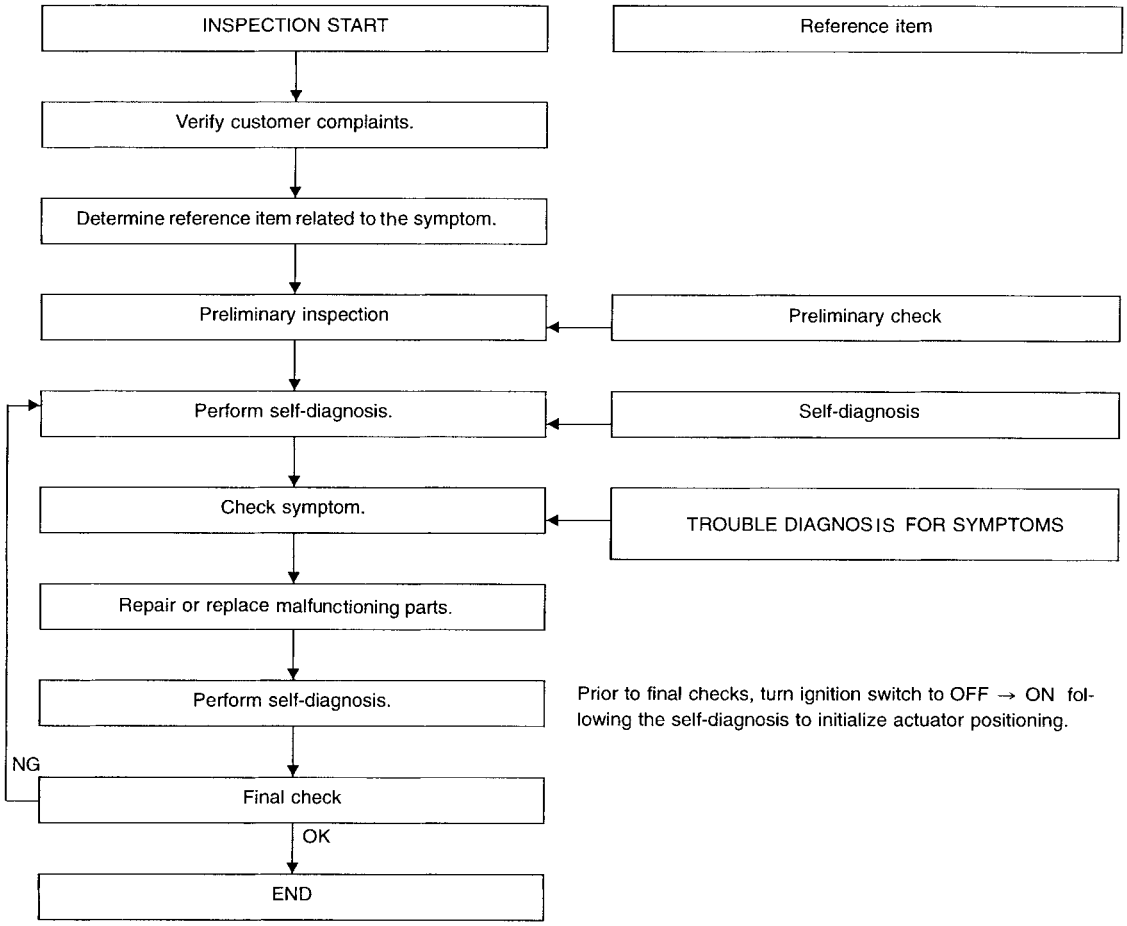

SEIA0100E

Preliminary check : WT-14 Self-diagnosis : WT-15 Trouble diagnosis for symptoms : WT-20

Preliminary Check

INFOID:0000000001703760

BASIC INSPECTION

1.CHECK ALL TIRE PRESSURES

Check all tire pressures. Refer to WT-25, "Tire" .

OK or NG

OK >> GO TO 2.
NG >> Adjust tire pressure to specified value.

2.CHECK LOW TIRE PRESSURE WARNING LAMP ACTIVATION

Check low tire pressure warning lamp activation.

Does warning lamp activate for 1 second when ignition switch is turned ON?

YES >> GO TO 3.
NO >> GO TO WT-20, "Low Tire Pressure Warning Lamp Does Not Come On When Ignition Switch Is Turned On" .

3.CHECK BCM CONNECTOR

1. Disconnect BCM harness connector.
2. Check terminals for damage or loose connection.

3. Reconnect harness connector.

OK or NG

OK >> GO TO 4.
NG >> Repair or replace damaged parts.

4. CHECK TRANSMITTER ACTIVATION TOOL

Check transmitter activation tool battery.

OK or NG

OK >> Carry out self-diagnosis.
NG >> Replace battery in transmitter activation tool.

Self-Diagnosis

INFOID:0000000001703761

DESCRIPTION

During driving, the tire pressure monitoring system receives the signal transmitted from the transmitter installed in each wheel, and turns on the low tire pressure warning lamp when the tire pressure becomes low. The control unit (BCM) for this system has pressure judgement and self-diagnosis functions.

FUNCTION

When the tire pressure monitoring system detects low inflation pressure or an internal malfunction, the low tire pressure warning lamp in the combination meter comes on. The malfunction location is indicated by the low tire pressure warning lamp flashing and the buzzer sounding.

CONSULT-III Application to Tire Pressure Monitoring System

ITEM	SELF-DIAGNOSTIC RESULTS	DATA MONITOR
Front - Left transmitter	×	×
Front - Right transmitter	×	×
Rear - Left transmitter	×	×
Rear - Right transmitter	×	×
Warning lamp	—	×
Vehicle speed	×	×
Buzzer (in combination meter)	—	×
CAN Communication	×	×

× : Applicable
– : Not applicable

Self-Diagnostic Results Mode

Diagnostic item	Diagnostic item is detected when ···	Reference page
FLAT - TIRE - FL [C1704] FLAT - TIRE - FR [C1705] FLAT - TIRE - RR [C1706] FLAT - TIRE - RL [C1707]	FL tire pressure 193 kPa (2.0 kg/cm^2 , 28 psi) or less FR tire pressure 193 kPa (2.0 kg/cm^2 , 28 psi) or less RR tire pressure 193 kPa (2.0 kg/cm^2 , 28 psi) or less RL tire pressure 193 kPa (2.0 kg/cm^2 , 28 psi) or less	—
[NO-DATA] - FL [C1708] [NO-DATA] - FR [C1709] [NO-DATA] - RR [C1710] [NO-DATA] - RL [C1711]	Data from FL transmitter cannot be received. Data from FR transmitter cannot be received. Data from RR transmitter cannot be received. Data from RL transmitter cannot be received.	WT-18
[CHECKSUM- ERR] - FL [C1712] [CHECKSUM- ERR] - FR [C1713] [CHECKSUM- ERR] - RR [C1714] [CHECKSUM- ERR] - RL [C1715]	Checksum data from FL transmitter is malfunctioning. Checksum data from FR transmitter is malfunctioning. Checksum data from RR transmitter is malfunctioning. Checksum data from RL transmitter is malfunctioning.	WT-18
[PRESSDATA- ERR] - FL [C1716] [PRESSDATA- ERR] - FR [C1717] [PRESSDATA- ERR] - RR [C1718] [PRESSDATA- ERR] - RL [C1719]	Air pressure data from FL transmitter is malfunctioning. Air pressure data from FR transmitter is malfunctioning. Air pressure data from RR transmitter is malfunctioning. Air pressure data from RL transmitter is malfunctioning.	WT-19

Diagnostic item	Diagnostic item is detected when ···	Reference page
[CODE- ERR] - FL [C1720] [CODE- ERR] - FR [C1721] [CODE- ERR] - RR [C1722] [CODE- ERR] - RL [C1723]	Function code data from FL transmitter is malfunctioning. Function code data from FR transmitter is malfunctioning. Function code data from RR transmitter is malfunctioning. Function code data from RL transmitter is malfunctioning.	WT-18
[BATT - VOLT - LOW] - FL [C1724] [BATT - VOLT - LOW] - FR [C1725] [BATT - VOLT - LOW] - RR [C1726] [BATT - VOLT - LOW] - RL [C1727]	Battery voltage of FL transmitter drops. Battery voltage of FR transmitter drops. Battery voltage of RR transmitter drops. Battery voltage of RL transmitter drops.	WT-18
VHCL_SPEED_SIG_ERR [C1729]	Vehicle speed signal is in error.	WT-19

NOTE:

Before performing the self-diagnosis, be sure to register the ID or else the actual malfunction location may be different from that displayed on CONSULT-III.

Data Monitor Mode

MONITOR	CONDITION	SPECIFICATION
VHCL SPEED	Drive vehicle.	Vehicle speed (km/h or MPH)
AIR PRESS FL AIR PRESS FR AIR PRESS RR AIR PRESS RL	• Drive vehicle for a few minutes. or • Ignition switch ON and activation tool is transmitting activation signals.	Tire pressure (kPa or psi)
ID REGST FL1 ID REGST FR1 ID REGST RR1 ID REGST RL1	Ignition switch ON	Registration ID: DONE No registration ID: YET
WARNING LAMP		Low tire pressure warning lamp on: ON Low tire pressure warning lamp off: OFF
BUZZER		Buzzer in combination meter on: ON Buzzer in combination meter off: OFF

NOTE:

Before performing the self-diagnosis, be sure to register the ID, or the actual malfunction location may be different from that displayed on CONSULT-III.

Flash Code/Symptom Chart

INFOID:0000000001703762

Flash Code or Symptom	Malfunction part	Reference page
15 16 17 18	FL tire pressure drops to 193 kPa (2.0 kg/cm^2 , 28 psi) or less FR tire pressure drops to 193 kPa (2.0 kg/cm^2 , 28 psi) or less RR tire pressure drops to 193 kPa (2.0 kg/cm^2 , 28 psi) or less RL tire pressure drops to 193 kPa (2.0 kg/cm^2 , 28 psi) or less	—
21 22 23 24	Transmitter no data (FL) Transmitter no data (FR) Transmitter no data (RR) Transmitter no data (RL)	WT-18
31 32 33 34	Transmitter checksum error (FL) Transmitter checksum error (FR) Transmitter checksum error (RR) Transmitter checksum error (RL)	WT-18
35 36 37 38	Transmitter pressure data error (FL) Transmitter pressure data error (FR) Transmitter pressure data error (RR) Transmitter pressure data error (RL)	WT-19

Flash Code or Symptom	Malfunction part	Reference page
41 42 43 44	Transmitter function code error (FL) Transmitter function code error (FR) Transmitter function code error (RR) Transmitter function code error (RL)	WT-18
45 46 47 48	Transmitter battery voltage low (FL) Transmitter battery voltage low (FR) Transmitter battery voltage low (RR) Transmitter battery voltage low (RL)	WT-18
52	Vehicle speed signal	WT-19
Low tire pressure warning lamp does not come on when ignition switch is turned on.	• Fuse or combination meter • BCM connector or circuit • BCM	WT-20
Low tire pressure warning lamp stays on when ignition switch is turned on.	• Combination meter • BCM connector or circuit • BCM	WT-20
Low tire pressure warning lamp flashes when ignition switch is turned on.	• BCM harness connector or circuit • BCM • Transmitter's mode off • ID registration not completed yet	WT-21
Hazard warning lamps flash when ignition switch is turned on.	• BCM harness connector or circuit • BCM	WT-22
ID registration cannot be completed.	• Transmitter • Remote keyless entry receiver harness connector or circuit • Remote keyless entry receiver • BCM harness connector or circuit • BCM	WT-22

TROUBLE DIAGNOSIS FOR SELF-DIAGNOSTIC ITEMS

Data from Transmitter Not Being Received

INFOID:0000000001703763

MALFUNCTION CODE NO. 21, 22, 23 or 24 (DTC C1708, C1709, C1710 or C1711)

1. CHECK BCM

Drive for several minutes. Check all tire pressures with CONSULT-III.

Are all tire pressures displayed as 0 kPa?

YES >> GO TO 2.
NO >> GO TO 3.

2. CHECK REMOTE KEYLESS ENTRY RECEIVER CONNECTOR

Check remote keyless entry receiver connector for damage or loose connections.

OK or NG

OK >> Replace BCM, then GO TO 3. Refer to BCS-18, "Removal and Installation of BCM".
NG >> Repair or replace remote keyless entry receiver connector.

3. PERFORM ID REGISTRATION

Carry out ID registration of all transmitters. Refer to WT-11, "ID Registration Procedure".

Is there a tire that cannot register ID?

YES >> Replace transmitter of the tire, then GO TO 5. Refer to WT-23, "Transmitter (Pressure Sensor)".
NO >> GO TO 4.

4. DRIVE VEHICLE

1. Drive at a speed of 40 km/h (25 MPH) or more for several minutes without stopping.
2. Check all tire pressures with CONSULT-III within 15 minutes after vehicle speed becomes 17 km/h (11 MPH).

Does “DATA MONITOR ITEM” display tire pressure as normal without any warning lamp?

YES >> Inspection End.
NO >> GO TO 5.

5. ID REGISTRATION AND VEHICLE DRIVING

1. Carry out ID registration of all transmitters. Refer to WT-11, "ID Registration Procedure".
2. Drive at a speed of 40 km/h (25 MPH) or more for 3 minutes, and then drive the vehicle at any speed for 10 minutes.
3. Check all tire pressures with CONSULT-III within 5 minutes.

Does “DATA MONITOR ITEM” display tire pressure as normal without any warning lamp?

YES >> Inspection End.
NO >> GO TO the inspection applicable to DTC.

Transmitter Malfunction

INFOID:0000000001703764

MALFUNCTION CODE NO. 31, 32, 33, 34, 41, 42, 43, 44, 45, 46, 47 or 48 (DTC C1712, C1713, C1714, C1715, C1720, C1721, C1722, C1723, C1724, C1725, C1726 or C1727)

1. PERFORM ID REGISTRATION

1. Carry out ID registration of all transmitters. Refer to WT-11, "ID Registration Procedure".
2. Drive at a speed of 40 km/h (25 MPH) or more for 3 minutes, and then drive the vehicle at any speed for 10 minutes.

>> GO TO 2.

2. REPLACE TRANSMITTER

1. Check low tire pressure warning lamp again for flashing, replace malfunctioning transmitter. Refer to WT-23, "Transmitter (Pressure Sensor)".
2. Carry out ID registration of all transmitters. Refer to WT-11, "ID Registration Procedure".

Can ID registration of all transmitters be completed?

YES >> GO TO 3.
NO >> GO TO WT-18, "Data from Transmitter Not Being Received".

3. DRIVE VEHICLE

1. Drive at a speed of 40 km/h (25 MPH) or more for 3 minutes, and then drive the vehicle at any speed for 10 minutes.
2. Check all tire pressures with CONSULT-III within 5 minutes.

Does “DATA MONITOR ITEM” display tire pressure as normal without any warning lamp?

YES >> Inspection End.
NO >> Replace malfunctioning transmitter, and perform Step 3 again. Refer to WT-23, "Transmitter (Pressure Sensor)".

Transmitter Pressure Malfunction

INFOID:0000000001703765

MALFUNCTION CODE NO. 35, 36, 37 or 38 (DTC C1716, C1717, C1718 or C1719)

1. CHECK ALL TIRE PRESSURES

Check all tire pressures. Refer to WT-25, "Tire".

Are there any tires with pressure of 64 psi or more?

YES >> Adjust tire pressure to specified value.
NO >> GO TO 2.

2. ID REGISTRATION AND VEHICLE DRIVING

1. Carry out ID registration of all transmitters. Refer to WT-11, "ID Registration Procedure".
2. Drive at a speed of 40 km/h (25 MPH) or more for several minutes without stopping.
3. Check all tire pressures with CONSULT-III within 15 minutes after vehicle speed becomes 17 km/h (11 MPH).

Does “DATA MONITOR ITEM” display 64 psi or more?

YES >> Replace transmitter. Refer to WT-23, "Transmitter (Pressure Sensor)". GO TO 3.
NO >> GO TO 3.

3. ID REGISTRATION AND VEHICLE DRIVING

1. Carry out ID registration of all transmitters. Refer to WT-11, "ID Registration Procedure".
2. Drive at a speed of 40 km/h (25 MPH) or more for 3 minutes, and then drive the vehicle at any speed for 10 minutes.
3. Check all tire pressures with CONSULT-III within 5 minutes.

Does “DATA MONITOR ITEM” display tire pressure as normal without any warning lamp?

YES >> Inspection End.
NO >> GO TO the inspection applicable to DTC.

Vehicle Speed Signal

INFOID:0000000001703766

MALFUNCTION CODE NO. 52 (DTC C1729)

1. SELF-DIAGNOSTIC RESULT CHECK

Using CONSULT-III, check display contents in self-diagnostic results.

Is " CAN COMM CIRCUIT" displayed in the self-diagnosis display items?

YES >> Malfunction in CAN communication system. GO TO LAN-12, "CAN Diagnosis with CONSULT-III".
NO >> GO TO 2.

2. CHECK BCM

Perform BCM diagnosis. Refer to BCS-16, "CONSULT-III Function (BCM)".

Inspection results OK?

OK >> Perform Vehicle Speed Sensor Inspection. Refer to EC-392, "Diagnosis Procedure".
NG >> Replace BCM. Refer to BCS-18, "Removal and Installation of BCM".

TROUBLE DIAGNOSIS FOR SYMPTOMS

Low Tire Pressure Warning Lamp Does Not Come On When Ignition Switch Is Turned On

INFOID:0000000001703767

DIAGNOSTIC PROCEDURE

1. SELF-DIAGNOSTIC RESULT CHECK

Using CONSULT-III, check display contents in self-diagnostic results.

Is "CAN COMM CIRCUIT" displayed in the self-diagnosis display items?

YES >> Malfunction in CAN communication system. GO TO LAN-12, "CAN Diagnosis with CONSULT-III".
NO >> GO TO 2.

2. CHECK COMBINATION METER

Check combination meter operation. Refer to DI-11, "Self-Diagnosis Mode of Combination Meter".

Inspection results OK?

OK >> GO TO 3.
NG >> Replace combination meter. Refer to IP-11, "Removal and Installation".

3. CHECK LOW TIRE PRESSURE WARNING LAMP

Disconnect BCM harness connector.

Does the low tire pressure warning lamp activate?

YES >> Replace BCM. Refer to BCS-18, "Removal and Installation of BCM".
NO >> Check combination meter operation. Refer to DI-11, "Self-Diagnosis Mode of Combination Meter".

Low Tire Pressure Warning Lamp Stays On When Ignition Switch Is Turned On

INFOID:0000000001703768

DIAGNOSTIC PROCEDURE

1. CHECK BCM CONNECTORS

1. Turn ignition switch OFF.
2. Disconnect BCM harness connectors M18 and M20.
3. Check terminals for damage or loose connections.

Inspection results OK?

OK >> GO TO 2.
NG >> Repair or replace damaged parts.

2. CHECK BCM POWER SUPPLY CIRCUIT (BAT)

Check voltage between BCM harness connector M20 terminal 70 and ground.

1.

Terminals			Voltage (Approx.)
(+)		(–)	
Connector	Terminal	Ground	Battery voltage
M20	70		

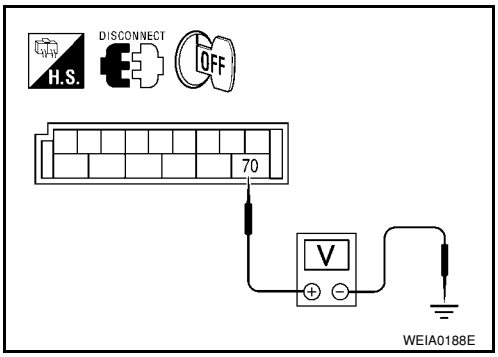

OK or NG

OK >> GO TO 3.
NG >> Check BCM power supply circuit for open or short.

3. CHECK BCM POWER SUPPLY CIRCUIT (IGN)

1. Turn ignition switch ON.
2. Check voltage between BCM harness connector M18 terminal 38 and ground.

Terminals			Voltage (Approx.)
(+)		(–)	
Connector	Terminal	Ground	Battery voltage
M18	38		

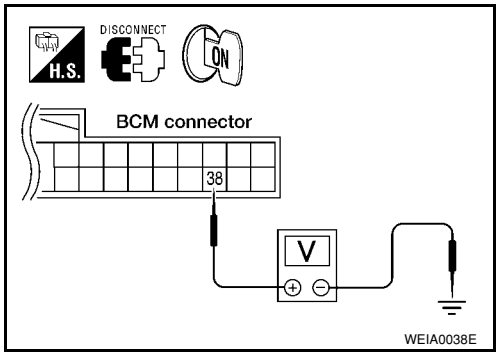

OK or NG

OK >> GO TO 4.
NG >> Check BCM power supply circuit for open or short.

4. CHECK BCM GROUND CIRCUIT

1. Turn ignition switch OFF.
2. Check continuity between BCM harness connector M20 terminal 67 and ground.

Terminals			Continuity
(+)		(–)	
Connector	Terminal	Ground	Yes
M20	67		

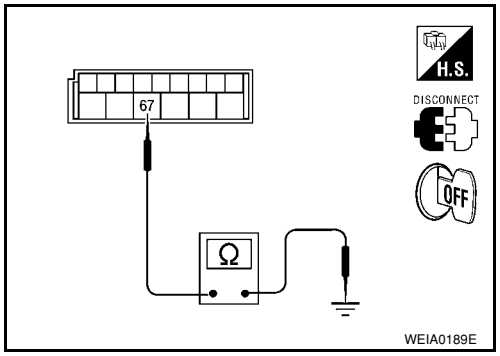

OK or NG

OK >> Replace BCM. Refer to BCS-18, "Removal and Installation of BCM".
NG >> Repair BCM ground circuit.

Low Tire Pressure Warning Lamp Flashes When Ignition Switch Is Turned On

INFOID:0000000001703769

NOTE:
If low tire pressure warning lamp flashes as shown, the system is normal.
Flash Mode A
- This mode shows transmitter status is OFF-mode.
  Carry out transmitter wake up operation. Refer to WT-12, "Transmitter Wake Up Operation".

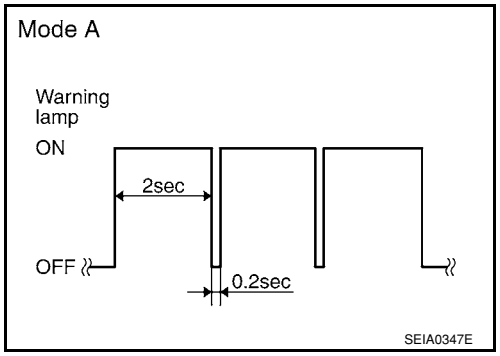

DIAGNOSTIC PROCEDURE

1. CHECK BCM CONNECTORS

1. Turn ignition switch OFF.
2. Disconnect BCM harness connectors M18 and M20.
3. Check terminals for damage or loose connections.

Inspection results OK?

OK >> GO TO 2.
NG >> Repair or replace damaged parts.

2. CHECK TIRE PRESSURE WARNING CHECK CONNECTOR CIRCUIT

Check continuity between BCM harness connector M18 terminal 15 and check connector M39 terminal 1.

Continuity should exist.

OK or NG

OK >> Replace BCM. Refer to BCS-18, "Removal and Installation of BCM".

NG >> Repair or replace harness connector.

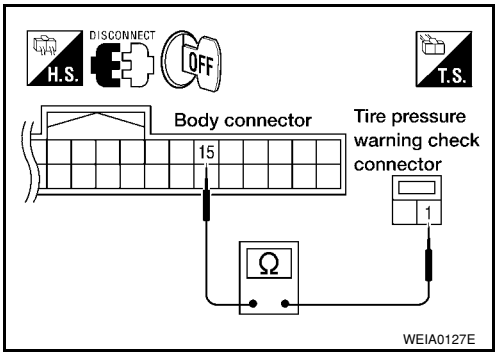

Hazard Warning Lamps Flash When Ignition Switch Is Turned On

INFOID:0000000001703770

DIAGNOSTIC PROCEDURE

1. CHECK BCM GROUND CIRCUIT

1. Turn ignition switch OFF.
2. Disconnect BCM harness connector M20.
3. Check continuity between BCM harness connector M20 terminal 67 and ground.

Terminals			Continuity
(+)		(–)	
Connector	Terminal	Ground	Yes
M20	67		

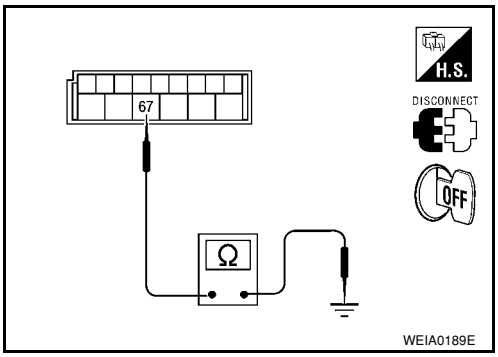

OK or NG

OK >> Replace BCM. Refer to BCS-18, "Removal and Installation of BCM".

NG >> Repair BCM ground circuit.

ID Registration Cannot Be Completed

INFOID:0000000001703771

DIAGNOSTIC PROCEDURE

1. PERFORM ID REGISTRATION OF ALL TRANSMITTERS

Carry out ID registration of all transmitters. Refer to WT-11, "ID Registration Procedure".

Can ID registration of all transmitters be completed?

YES >> Inspection End.

NO >> GO TO WT-18, "Data from Transmitter Not Being Received".

REMOVAL AND INSTALLATION

Transmitter (Pressure Sensor)

INFOID:0000000001703772

REMOVAL

1. Remove wheel and tire using power tool.
2. Deflate tire. Unscrew transmitter retaining nut and allow transmitter to fall into tire.
3. Gently bounce tire so that transmitter falls to bottom of tire. Place wheel and tire assembly on tire changing machine and break both tire beads. Ensure that the transmitter remains at the bottom of the tire while breaking the bead.

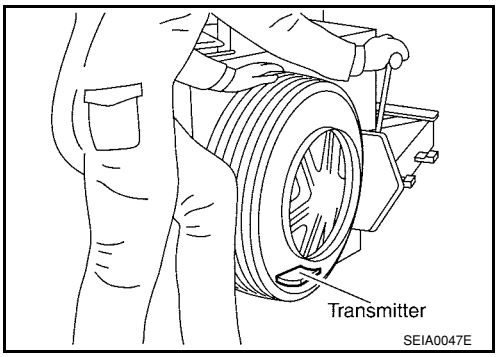

4. Turn tire so that valve hole is at bottom, and gently bounce the tire to ensure transmitter is near valve hole. Carefully lift tire onto turntable and position valve hole (and transmitter) 270 degrees from mounting/dismounting head.
5. Lubricate tire well, and remove top side of tire. Reach inside the tire and remove the transmitter.
6. Remove the second side of the tire as normal.

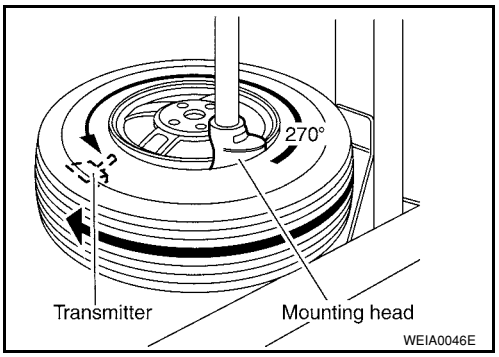

INSTALLATION

1. Place first side of tire onto rim.

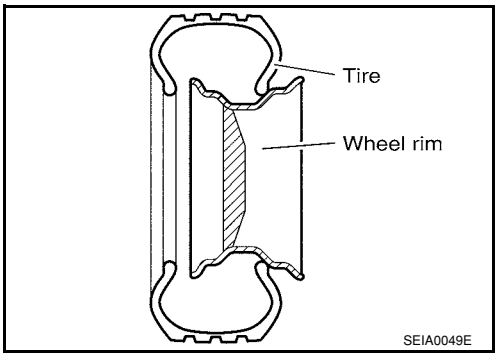

2. Apply suitable silicone lubricant to new transmitter seal then install seal on transmitter. Refer to MA-10.
   NOTE:
   Always replace the seal after every disassembly.

3. Mount transmitter on rim and tighten nut.
   NOTE:
   Make sure no burrs exist in the valve stem hole of the wheel.

   Transmitter nut : 8.0 N·m (0.82 kg-m, 71 in-lb)

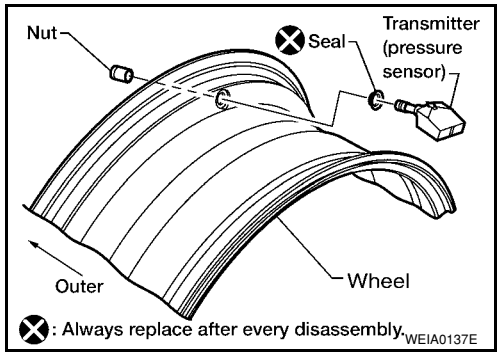

4. Place wheel on turntable of tire machine. Ensure that transmitter is 270 degrees from mounting/dismounting head.
   NOTE:
   Do not touch transmitter with mounting head.
5. Lubricate tire well, and install second side of tire as normal. Ensure that tire does not rotate relative to rim.
6. Inflate tire and balance the wheel and tire assembly. Refer to WT-6, "Balancing Wheels".
7. Install wheel and tire assembly in appropriate wheel position on vehicle. Refer to WT-6, "Rotation".
   NOTE:
   If replacing the transmitter, then transmitter wake up operation must be performed. Refer to WT-12, "Transmitter Wake Up Operation".

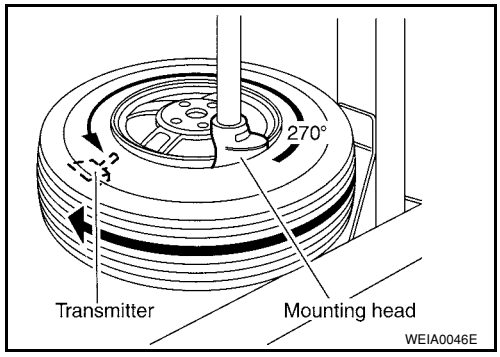

SERVICE DATA AND SPECIFICATIONS (SDS)

Road Wheel

INFOID:0000000001703773

Standard item		Allowable	
		Aluminum	Steel
Maximum radial runout limit	Lateral deflection	Less than 0.3 mm (0.012 in)	Less than 0.5 mm (0.020 in)
	Radial deflection	Less than 0.3 mm (0.012 in)	Less than 0.8 mm (0.031 in)
Maximum allowable unbalance	Dynamic (At rim flange)	Less than 5 g (0.18 oz) (one side)	
	Static (At rim flange)	Less than 10 g (0.35 oz)	

Tire

INFOID:0000000001703774

Unit: kPa (kg/cm^2 , psi)

Tire size/speed rating	Air pressure		
	Conventional tire		Spare tire
	Front wheel	Rear wheel	
P185/65R15 86H	230 (2.3, 33)	230 (2.3, 33)	—
T125/70D15	—	—	420 (4.2, 60)

SECTION WW
WIPER, WASHER & HORN

CONTENTS

SERVICE INFORMATION 2

PRECAUTION 2
Precaution for Supplemental Restraint System (SRS) "AIR BAG" and "SEAT BELT PRE-TENSIONER" 2
Precaution for Procedure without Cowl Top Cover.....2

FRONT WIPER AND WASHER SYSTEM 3
Component Parts and Harness Connector Location 3
System Description 3
CAN Communication System Description 5
Schematic 6
Wiring Diagram - WIPER - 7
Terminal and Reference Value for BCM 9
Terminal and Reference Value for IPDM E/R 9
How to Proceed with Trouble Diagnosis 10
Preliminary Check 10
CONSULT-III Function (BCM) 10
CONSULT-III Function (IPDM E/R) 11
Front Wiper Does Not Operate 12
Front Wiper Does Not Return to Stop Position (After Front Wiper Operate for 10 Seconds, They Stop for 20 Seconds, and After Repeating the Operation Five Times, They Become Inoperative) 14
Only Front Wiper Low Does Not Operate 15
Only Front Wiper High Does Not Operate 16
Only Front Wiper Intermittent Does Not Operate 17
Front Wiper Intermittent Operation Switch Position Cannot Be Adjusted 17
Wiper Does Not Wipe When Front Washer Operates 18
Front Wiper Does Not Stop 18
Removal and Installation of Front Wiper Arms 18
Adjustment of Wiper Arm Stop Location 19
Removal and Installation of Front Wiper Drive Assembly 19
Removal and Installation of Front Washer Nozzle...20
Inspection for Washer Nozzle 20
Washer Nozzle Adjustment 21
Washer Tube Layout 21
Removal and Installation of Front Wiper and Washer Switch 22
Inspection of Front Wiper and Washer Switch Circuit 22
Removal and Installation of Washer Tank 22
Removal and Installation of Front Washer Motor 23

REAR WIPER AND WASHER SYSTEM 24
Component Parts and Harness Connector Location 24
System Description 24
Wiring Diagram - WIP/R - 26
Terminal and Reference Value for BCM 27
How to Proceed with Trouble Diagnosis 27
Preliminary Check 28
CONSULT-III Function (BCM) 28
Rear Wiper Does Not Operate 28
Rear Wiper Stop Position Is Incorrect 29
Only Rear Wiper Does Not Operate 30
Only Rear Wiper Intermittent Does Not Operate 31
Wiper Does Not Wipe When Rear Washer Operates 31
Removal and Installation 31
Washer Nozzle Adjustment 34

POWER SOCKET 35
Wiring Diagram - P/SCKT - 35
Removal and Installation 35

HORN 37
Wiring Diagram - HORN - 37
Removal and Installation 37

SERVICE INFORMATION

PRECAUTION

Precaution for Supplemental Restraint System (SRS) "AIR BAG" and "SEAT BELT PRE-TENSIONER"

INFOID:0000000001704533

The Supplemental Restraint System such as “AIR BAG” and “SEAT BELT PRE-TENSIONER”, used along with a front seat belt, helps to reduce the risk or severity of injury to the driver and front passenger for certain types of collision. This system includes seat belt switch inputs and dual stage front air bag modules. The SRS system uses the seat belt switches to determine the front air bag deployment, and may only deploy one front air bag, depending on the severity of a collision and whether the front occupants are belted or unbelted.
Information necessary to service the system safely is included in the SRS and SB section of this Service Manual.

WARNING:

- **To avoid rendering the SRS inoperative, which could increase the risk of personal injury or death in the event of a collision which would result in air bag inflation, all maintenance must be performed by an authorized NISSAN/INFINITI dealer.**
- **Improper maintenance, including incorrect removal and installation of the SRS, can lead to personal injury caused by unintentional activation of the system. For removal of Spiral Cable and Air Bag Module, see the SRS section.**
- **Do not use electrical test equipment on any circuit related to the SRS unless instructed to in this Service Manual. SRS wiring harnesses can be identified by yellow and/or orange harnesses or harness connectors.**

Precaution for Procedure without Cowl Top Cover

INFOID:0000000001704534

When performing the procedure after removing cowl top cover, cover the lower end of windshield with urethane, etc.

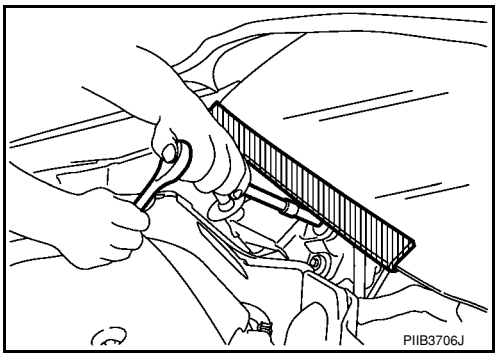

FRONT WIPER AND WASHER SYSTEM

Component Parts and Harness Connector Location

INFOID:0000000001704535

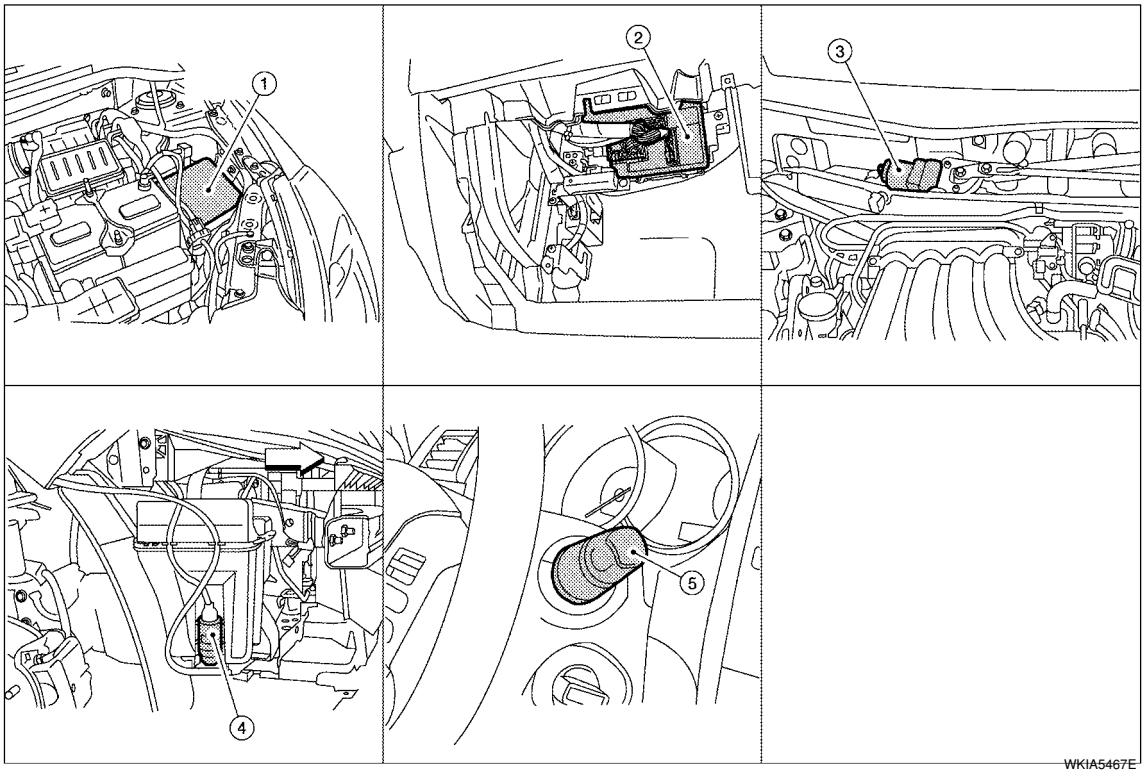

1. IPDM E/R E45, E46 and E48
2. BCM M18 and M20 (view with glove box removed)
3. Front wiper motor E1 (view with cowl top cover removed)
4. Front and rear washer motor E2 (view with front fender protector LH removed)
5. Combination switch (wiper switch) M28

System Description

INFOID:0000000001704536

- Front wiper relays (front wiper relay, front wiper high relay) are located in the IPDM E/R (intelligent power distribution module engine room).
- Wiper switch (combination switch) is composed of a combination of 5 output terminals and 5 input terminals. Terminal combination status is read by BCM (body control module) when switch is turned ON.
- BCM controls front wiper LO, HI, and INT (intermittent) operation.
- IPDM E/R operates wiper motor according to CAN communication signals from BCM.

OUTLINE

Power is supplied at all times
- to ignition relay, located in IPDM E/R, from battery directly,
- through 40A fusible link (letter **g**, located in fuse and fusible link box)
- to BCM terminal 70,
- through 30A fuse (No. 39, located in IPDM E/R)
- to front wiper relay located in IPDM E/R
- through 15A fuse (No. 52, located in IPDM E/R), and
- through 20A fuse (No. 53, located in IPDM E/R)
- to CPU located in IPDM E/R.

When ignition switch is in ON or START position, power is supplied
- through ignition relay (located in IPDM E/R)
- to front wiper relay (located in IPDM E/R), and

- to front wiper high relay (located in IPDM E/R), and
- to CPU (located in IPDM E/R),
- through 10A fuse [No. 6, located in fuse block (J/B)]
- to BCM terminal 38,
- through 15A fuse [No. 4, located in fuse block (J/B)]
- to combination switch terminal 14.

Ground is supplied
- to IPDM E/R terminals 39 and 59, and
- to front wiper motor terminal 2
- through grounds E15 and E24
- to BCM terminal 67, and
- to combination switch terminal 12
- through grounds M57 and M61.

LOW SPEED WIPER OPERATION

When the front wiper switch is in LO position, the BCM detects the low speed wiper ON signal by means of the BCM wiper switch reading function.
The BCM sends a front wiper request signal (LO) through the CAN communication line
- from BCM terminals 39 and 40
- to IPDM E/R terminals 40 and 41.

When the IPDM E/R receives front wiper request signal (LO), it turns ON front wiper relay, located in IPDM E/R, power is supplied
- through IPDM E/R terminal 33 and front wiper high relay and front wiper relay
- to front wiper motor terminal 3.

Ground is supplied
- to front wiper motor terminal 2
- through grounds E15 and E24.

With power and ground is supplied, front wiper motor operates at low speed.

HIGH SPEED WIPER OPERATION

When the front wiper switch is in HI position, the BCM detects a high speed wiper ON signal by means of the BCM wiper switch reading function.
The BCM sends a front wiper request signal (HI) through the CAN communication line
- from BCM terminals 39 and 40
- to IPDM E/R terminals 40 and 41.

When the IPDM E/R receives front wiper request signal (HI), it turns ON front wiper relay and front wiper high relay, located in IPDM E/R, power is supplied
- through IPDM E/R terminal 32
- to front wiper motor terminal 5.

Ground is supplied
- to front wiper motor terminal 2
- through grounds E15 and E24.

With power and ground is supplied, front wiper motor operates at high speed.

INTERMITTENT OPERATION

Wiper intermittent operation delay interval is determined from the intermittent wiper dial position inputs. During each intermittent operation delay interval, the BCM sends a front wiper request signal to the IPDM E/R to operate the wipers.
When the ignition switch is in the ON or START position, and the front wiper switch is turned to the intermittent position, the BCM detects a front wiper (intermittent) ON signal by means of the BCM wiper switch reading function.
BCM then sends front wiper (intermittent) request signal through the CAN communication lines
- from BCM terminals 39 and 40
- to IPDM E/R terminals 40 and 41.

When BCM determines that combination switch status is front wiper intermittent ON, it performs the following operations.
- BCM detects ON/OFF status of intermittent wiper dial position
- BCM calculates operation interval from wiper dial position.
- BCM sends a front wiper request signal (INT) to IPDM E/R at calculated operation interval.

When IPDM E/R receives the front wiper request signal (INT), it supplies ground to energize the front wiper relay. It then sends auto-stop signal to the BCM and conducts intermittent front wiper motor operation.

AUTO STOP OPERATION

With wiper switch turned OFF, wiper motor will continue to operate until wiper arms reach windshield base.
When the wiper arms are not located at base of windshield with wiper switch OFF, ground is supplied
- from IPDM E/R terminal 33
- to front wiper motor terminal 3, in order to continue wiper motor operation at low speed.

When the wiper arms reach base of windshield, front wiper motor terminals 4 and 2 are connected, and ground is supplied
- to IPDM E/R terminal 38
- through front wiper motor terminals 4 and 2, and
- through grounds E15 and E24.

Then the IPDM E/R sends auto stop operation signal to BCM with CAN communication line.
When the BCM receives auto-stop operation signal, BCM sends wiper stop signal to IPDM E/R with CAN communication line.
IPDM E/R stops wiper motor. Wiper motor will then stop wiper arms at the STOP position.

WASHER OPERATION

When the wiper switch is in front wiper washer position, BCM detect front wiper washer signal by BCM combination switch reading function. Refer to BCS-3, "System Description" .

Combination switch power is supplied
- through combination switch terminal 14
- to washer motor terminal 1.

Ground is supplied
- to front washer motor terminal 2
- through combination switch terminal 11, and
- through combination switch terminal 12
- through grounds M57 and M61.

With ground supplied, front washer motor is operated.
When the BCM detects that front washer motor has operated for 0.4 seconds or longer, BCM operates front wiper motor for low speed.
When the BCM detects washer switch is OFF, low speed operation cycles approximately 2 times and stops.

MIST OPERATION

When the wiper switch is turned to the mist position, wiper low speed operation cycles once and then stops.
For additional information about wiper operation under this condition, refer to "LOW SPEED WIPER OPERATION" .
If switch is held in mist position, low speed operation continues.

FAIL-SAFE FUNCTION

If an abnormality occurs in CAN communications, IPDM E/R holds the condition just before fail-safe status is initiated until ignition switch is turned OFF. (If wipers were operating in LO just before the initiation of fail-safe status, they continue to operate in LO until ignition switch is turned OFF.)

COMBINATION SWITCH READING FUNCTION

Refer to BCS-3, "System Description" .

CAN Communication System Description

INFOID:0000000001704537

Refer to LAN-6, "System Description".

Schematic

INFOID:0000000001704538

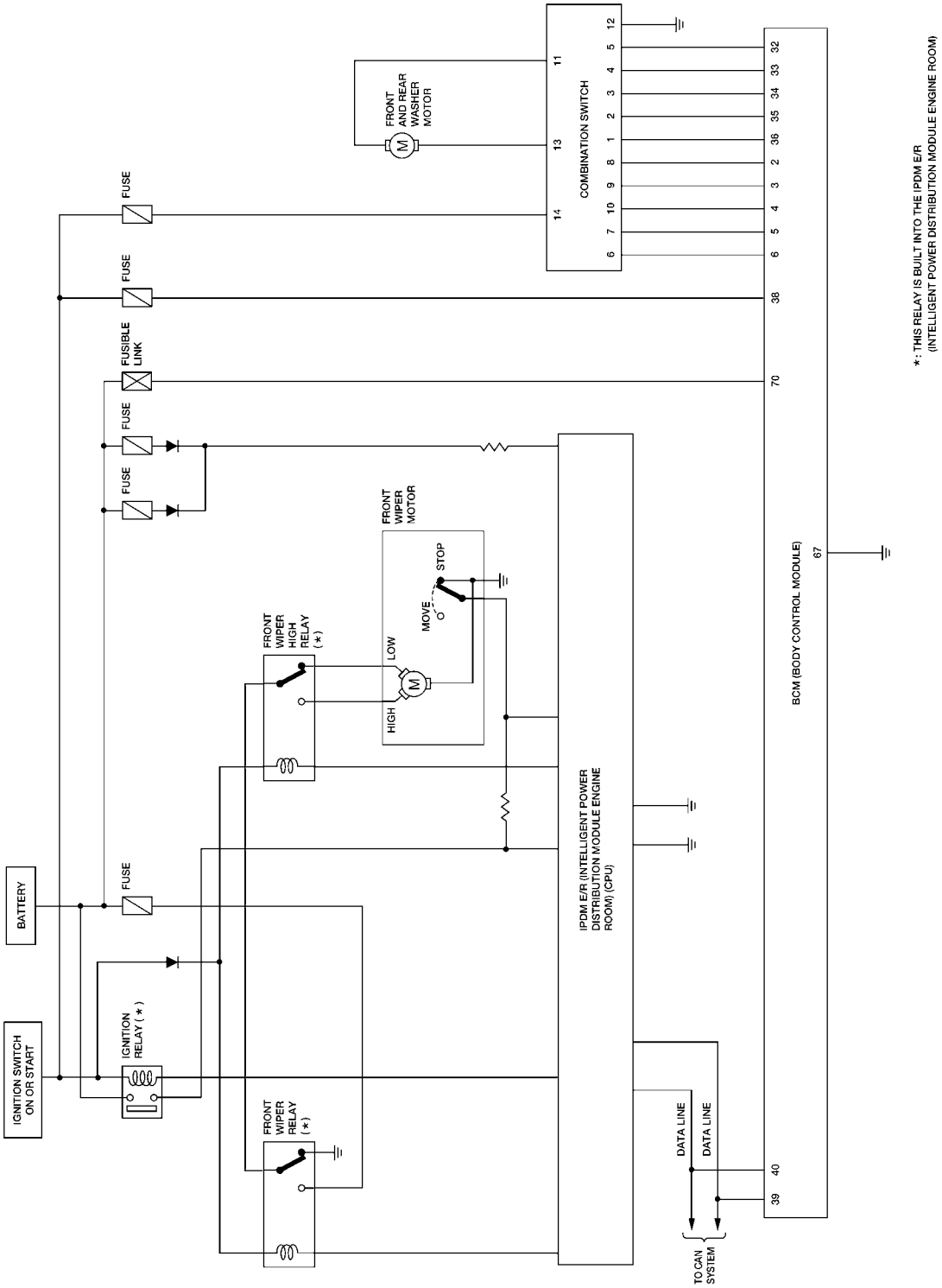

WKWA4990E

Wiring Diagram - WIPER -

INFOID:0000000001704539

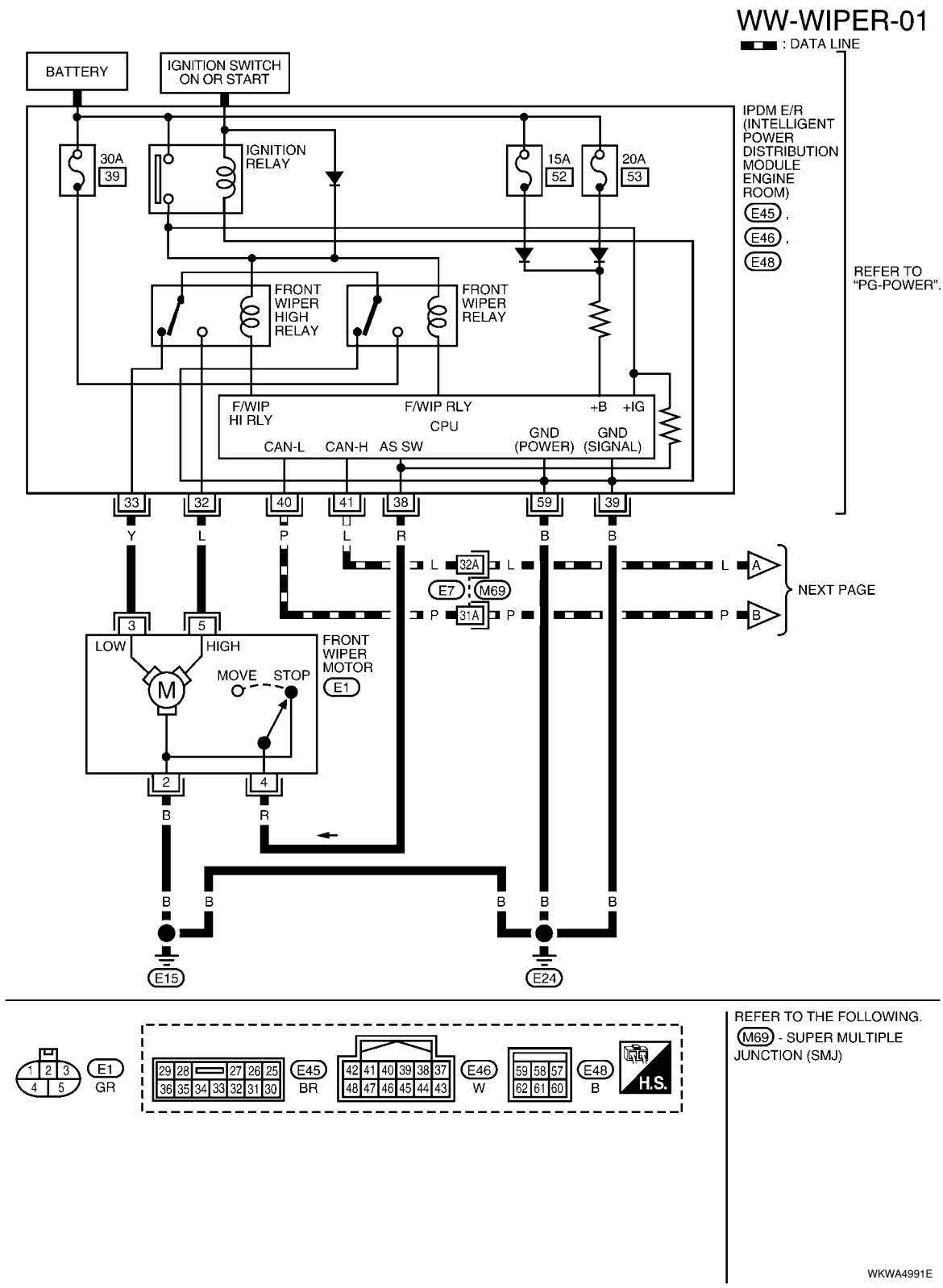

WW-WIPER-02

: DATA LINE

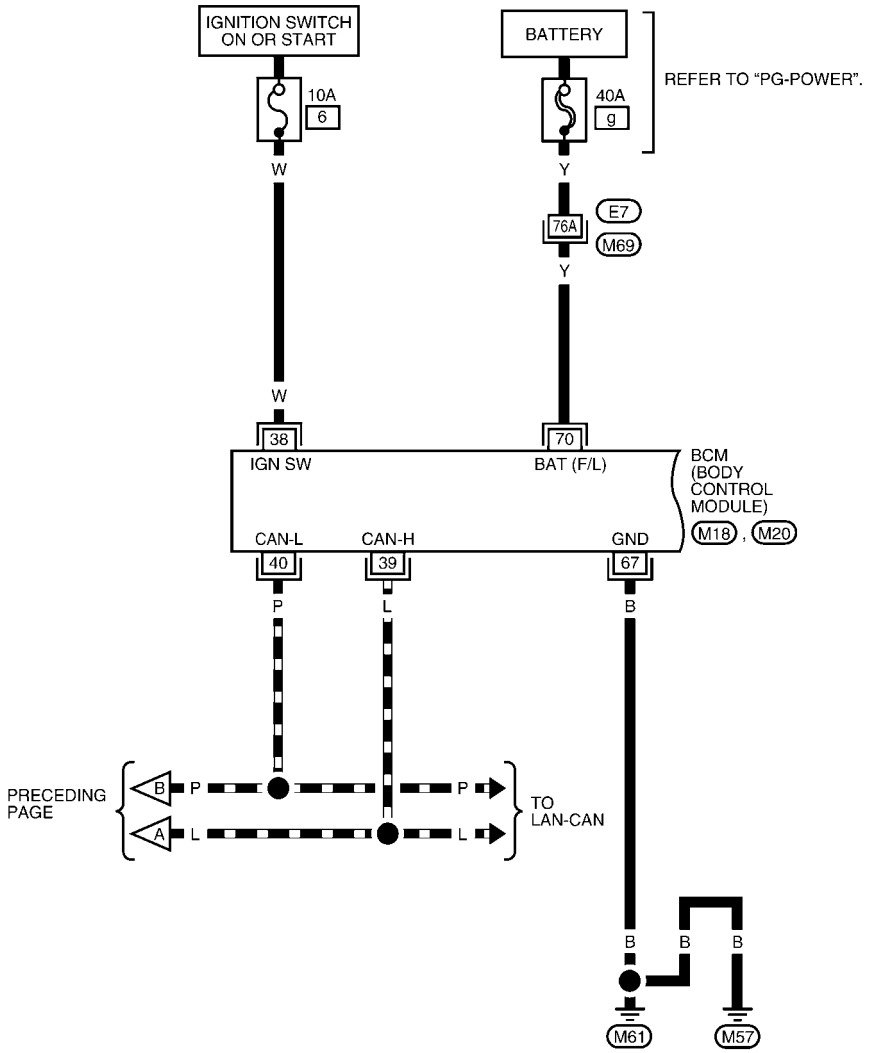

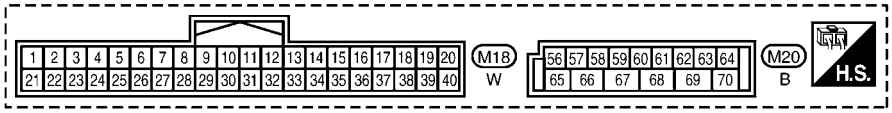

REFER TO THE FOLLOWING.
M69 - SUPER MULTIPLE JUNCTION (SMJ)

WKWA4992E

WW-WIPER-03

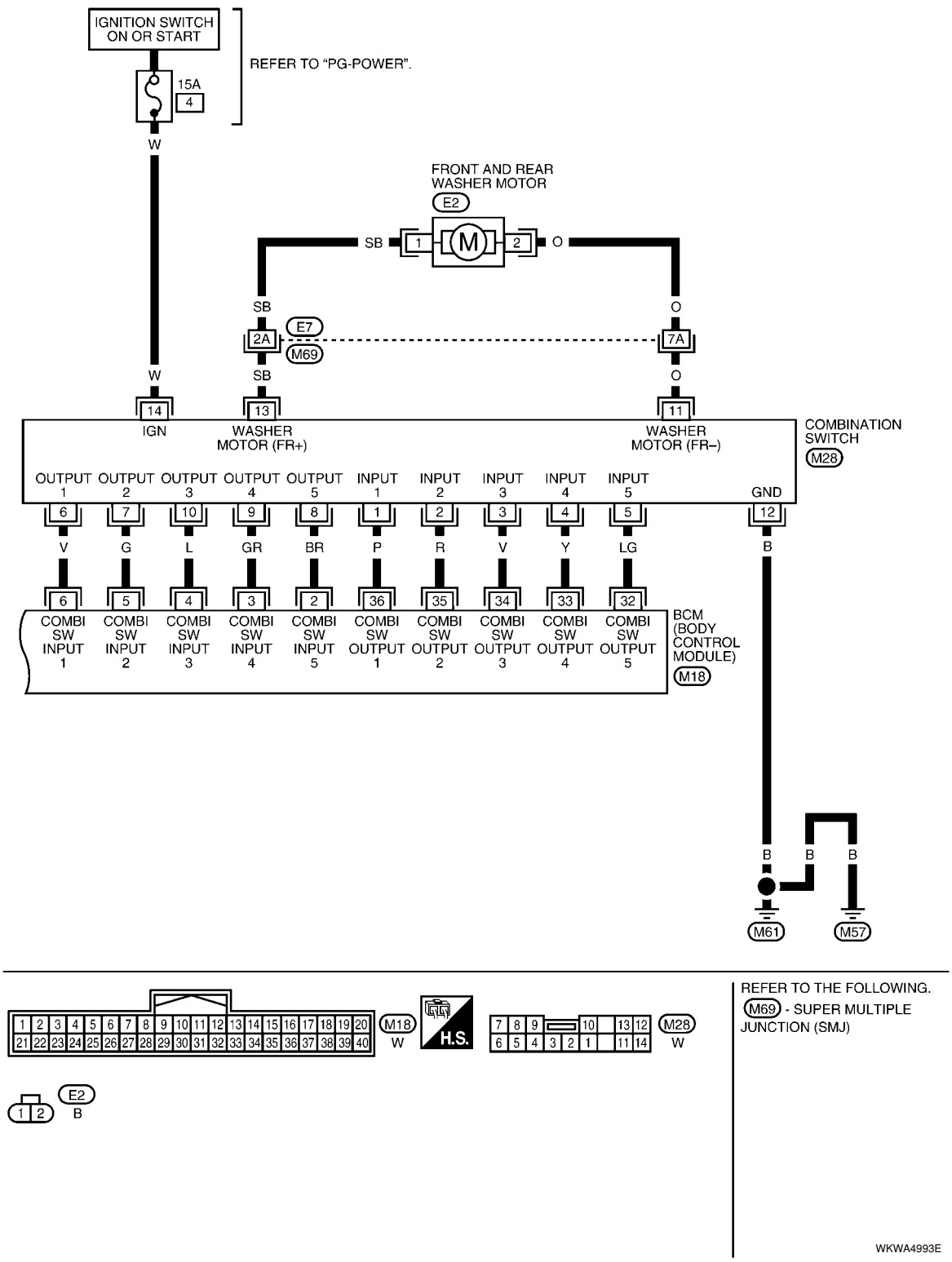

Terminal and Reference Value for BCM

INFOID:0000000001704540

Refer to BCS-11, "Terminal and Reference Value for BCM" .

Terminal and Reference Value for IPDM E/R

INFOID:0000000001704541

Refer to PG-23, "Terminal and Reference Value for IPDM E/R" .

How to Proceed with Trouble Diagnosis

INFOID:0000000001704542

1. Confirm symptoms and customer complaint.
2. Understand operation description and function description. Refer to WW-3, "System Description" .
3. Perform preliminary check. Refer to WW-10, "Preliminary Check" .
4. Check symptom and repair or replace malfunctioning parts.
5. Does front wiper and washer operate normally? If YES, GO TO 6. If NO, GO TO 4.
6. Inspection End.

Preliminary Check

INFOID:0000000001704543

CHECK POWER SUPPLY AND GROUND CIRCUIT FOR BCM

Refer to BCS-15, "BCM Power Supply and Ground Circuit Inspection"

CONSULT-III Function (BCM)

INFOID:0000000001704544

CONSULT-III can display each diagnostic item using the diagnostic test modes shown following.

BCM diagnosis position	Diagnosis mode	Description
WIPER	WORK SUPPORT	Changes the setting for each function.
	DATA MONITOR	Displays BCM input data in real time.
	ACTIVE TEST	Device operation can be checked by applying a drive signal to device.
BCM	SELF-DIAG RESULTS	BCM performs self-diagnosis of CAN communication.
	CAN DIAG SUPPORT MNTR	The result of transmit/receive diagnosis of CAN communication can be read.

WORK SUPPORT

Display Item List

Item	Description	CONSULT-III	Factory setting
WIPER SPEED SETTING	Vehicle speed sensing type wiper control mode can be changed in this mode.	ON	×
		OFF	—

DATA MONITOR

ALL SIGNALS	Monitors all the signals.
SELECTION FROM MENU	Selects items and monitor them.

Display Item List

Monitor item		Contents
IGN ON SW	“ON/OFF”	Displays “ignition switch ON (ON)/Other OFF or ACC (OFF)” status as judged from ignition switch signal.
IGN SW CAN	“ON/OFF”	Displays “ignition switch ON (ON)/Other OFF or ACC (OFF)” status as judged from CAN communication signal.
FR WIPER HI	“ON/OFF”	Displays “FRONT WIPER HI (ON)/Other (OFF)” status as judged from wiper switch signal.
FR WIPER LOW	“ON/OFF”	Displays “FRONT WIPER LOW (ON)/Other (OFF)” status as judged from wiper switch signal.
FR WIPER INT	“ON/OFF”	Displays “FRONT WIPER INT (ON)/Other (OFF)” status as judged from wiper switch signal.
FR WASHER SW	“ON/OFF”	Displays “FRONT WASHER Switch (ON)/Other (OFF)” status as judged from wiper switch signal.
INT VOLUME	“1 - 7”	Displays intermittent operation dial position setting (1 - 7) as judged from wiper switch signal.
FR WIPER STOP	“ON/OFF”	Displays “Stopped (ON)/Operating (OFF)” status as judged from auto-stop signal.
VEHICLE SPEED	“km/h”	Displays vehicle speed status as judged from vehicle speed signal.

Monitor item		Contents
RR WIPER ON	“ON/OFF”	Displays “REAR WIPER (ON)/Other (OFF)” status as judged from wiper switch signal.
RR WIPER INT	“ON/OFF”	Displays “REAR WIPER INT (ON)/Other (OFF)” status as judged from wiper switch signal.
RR WASHER SW	“ON/OFF”	Displays “FRONT WASHER Switch (ON)/Other (OFF)” status as judged from wiper switch signal.
RR WIPER STOP	“ON/OFF”	Displays “Stopped (ON)/Operating (OFF)” status as judged from auto-stop switch 1.
RR WIPER STP2	“ON/OFF”	Displays “Stopped (ON)/Operating (OFF)” status as judged from auto-stop switch 2.
H/L WASH SW NOTE	“OFF”	—

NOTE: This item is displayed, but cannot be monitored.

ACTIVE TEST

Display Item List

Test item	Display on CONSULT-III screen	Description
Front wiper LO output	FR WIPER (LO)	Front LO wiper can be operated by any ON-OFF operation.
Front wiper HI output	FR WIPER (HI)	Front HI wiper can be operated by any ON-OFF operation.
Front wiper INT output	FR WIPER (INT)	Front INT wiper can be operated by any ON-OFF operation.
Rear wiper output	RR WIPER	Rear wiper can be operated by any ON-OFF operation.

CONSULT-III Function (IPDM E/R)

INFOID:0000000001704545

CONSULT-III can display each diagnostic item using the diagnostic test modes shown following.

IPDM E/R diagnostic Mode	Description
SELF-DIAG RESULTS	Displays IPDM E/R self-diagnosis results.
DATA MONITOR	Displays IPDM E/R input/output data in real time.
CAN DIAG SUPPORT MNTR	The result of transmit/receive diagnosis of CAN communication can be read.
ACTIVE TEST	Operation of electrical loads can be checked by sending drive signal to them.

DATA MONITOR

ALL SIGNALS	Monitors all items.
MAIN SIGNALS	Monitor the predetermined item.
SELECTION FROM MENU	Selects items and monitors them.

All Signals, Main Signals, Selection From Menu

Item name	CONSULT-III screen display	Display or unit	Monitor item selection			Description
			ALL SIGNALS	MAIN SIGNALS	SELECTION FROM MENU	
FR wiper request	FR WIP REQ	STOP/1LOW/ LOW/HI	×	×	×	Signal status input from BCM
Wiper auto stop	WIP AUTO STOP	ACT P/STOP P	×	×	×	Output status of IPDM E/R
Wiper protection	WIP PROT	OFF/BLOCK	×	×	×	Control status of IPDM E/R

NOTE:
Perform monitoring of IPDM E/R data with ignition switch ON. When ignition switch is at ACC, the display may not be correct.

ACTIVE TEST

Test item	CONSULT-III screen display	Description
Front wiper (HI, LO) output	FRONT WIPER	With a certain operation (OFF, HI ON, LO ON), front wiper relay (Lo, Hi) can be operated.

Front Wiper Does Not Operate

INFOID:0000000001704546

CAUTION:

- **During IPDM E/R fail-safe control, front wipers may not operate. Refer to PG-16, "System Description" in "PG IPDM E/R" to make sure that it is not in fail-safe status.**

1. ACTIVE TEST

With CONSULT-III

1. Select "IPDM E/R" on CONSULT-III, and select "ACTIVE TEST" on "SELECT DIAG MODE" screen.
2. Select "FRONT WIPER" on "SELECT TEST ITEM" screen.
3. Touch "LO" or "HI" screen.

Without CONSULT-III

Start up auto active test. Refer to PG-19, "Auto Active Test" .

Does front wiper operate normally?

YES >> GO TO 2.
NO >> GO TO 4.

2. CHECK CIRCUIT BETWEEN COMBINATION SWITCH AND BCM

With CONSULT-III

1. Select "BCM" on CONSULT-III, and select "WIPER" on "SELECT TEST ITEM" screen.
2. Select "DATA MONITOR" on "SELECT DIAG MODE" screen. Make sure that "FR WIPER INT", "FR WIPER LOW", and "FR WIPER HI" turn ON-OFF according to wiper switch operation.

Without CONSULT-III

Refer to LT-63, "Combination Switch Inspection" .

OK or NG

OK >> GO TO 3.
NG >> Check combination switch (wiper switch). Refer to LT-63, "Combination Switch Inspection" .

3. CHECK CIRCUIT BETWEEN IPDM E/R AND BCM

Select "BCM" on CONSULT-III, and perform self-diagnosis for "BCM".

Displayed self-diagnosis results

NO DTC>>Replace BCM. Refer to BCS-18, "Removal and Installation of BCM" .
CAN COMM CIRCUIT>>Check CAN communication line of BCM. Refer to BCS-17, "CAN Communication Inspection Using CONSULT-III (Self-Diagnosis)" .

4. CHECK GROUND CIRCUIT

1. Turn ignition switch OFF.
2. Disconnect front wiper motor.
3. Check continuity between front wiper motor connector and ground.

Front wiper motor connector	Terminal	Ground	Continuity
E1	2		Yes

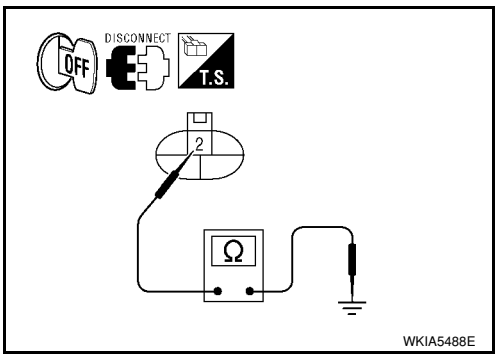

OK or NG

OK >> GO TO 5.
NG >> Repair or replace harness.

5. CHECK FRONT WIPER CIRCUIT

1. Disconnect IPDM E/R.

2. Check continuity between IPDM E/R connector (A) and front wiper motor connector (B).

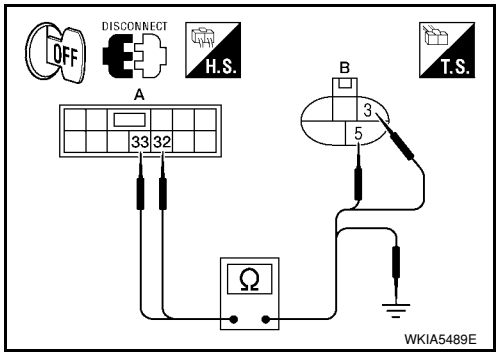

A		B		Continuity
Connector	Terminal	Connector	Terminal	
E45	32	E1	5	Yes
	33		3	

3. Check continuity between IPDM E/R connector (A) and ground.

A		Ground	Continuity
Connector	Terminal		
E45	32		No
	33		

OK or NG

OK >> GO TO 6.
NG >> Repair or replace harness.

6. CHECK IPDM E/R

With CONSULT-III

1. Connect IPDM E/R.
2. Turn ignition switch ON.
3. Select “IPDM E/R” by CONSULT-III, and select “ACTIVE TEST” on “SELECT DIAG MODE” screen.
4. Select “FRONT WIPER” on “SELECT TEST ITEM” screen.
5. Touch “LO” or “HI” screen.
6. Check voltage between IPDM E/R connector and ground while front wiper (HI, LO) is operating.

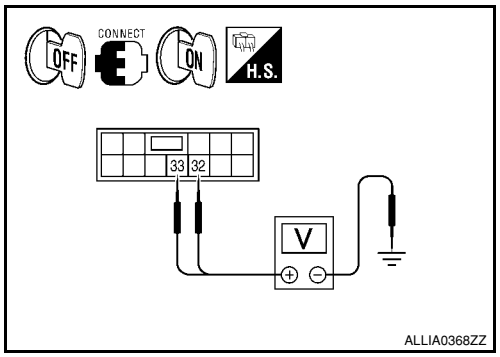

Terminal			Condition	Voltage (Approx.)
(+)		(-)		
IPDM E/R connector	Terminal			
E45	33	Ground	Stopped	0V
			LO operation	Battery voltage
	32		Stopped	0V
			HI operation	Battery voltage

Without CONSULT-III

1. Connect IPDM E/R.
2. Turn ignition switch ON.
3. Start auto active test. Refer to PG-19, "Auto Active Test" .
4. Check voltage between IPDM E/R connector and ground while front wiper (HI, LO) is operating.

Terminal			Condition	Voltage (Approx.)
(+)		(-)		
IPDM E/R connector	Terminal			
E45	33	Ground	Stopped	0V
			LO operation	Battery voltage
	23		Stopped	0V
			HI operation	Battery voltage

OK or NG

OK >> Replace front wiper motor. Refer to WW-19, "Removal and Installation of Front Wiper Drive Assembly" .
NG >> Replace IPDM E/R. Refer to PG-26, "Removal and Installation of IPDM E/R" .

Front Wiper Does Not Return to Stop Position (After Front Wiper Operate for 10 Seconds, They Stop for 20 Seconds, and After Repeating the Operation Five Times, They Become Inoperative)

INFOID:0000000001704547

CAUTION:
- **When auto-stop signal has not varied for 10 seconds or longer while IPDM E/R is operating front wipers, IPDM E/R considers that front wipers are locked, and stops wiper output. That causes this symptom.**
- **This status can be checked by "DATA MONITOR" of "IPDM E/R" on which "WIPER PROT" item shows "BLOCK".**

1. CHECK FRONT WIPER STOP SIGNAL

With CONSULT-III
Select "IPDM E/R" on CONSULT-III. With "DATA MONITOR", make sure that "WIP AUTO STOP" turns "ACT P" - "STOP P" linked with wiper operation.

Without CONSULT-III
GO TO 2.

OK or NG

OK >> Replace IPDM E/R. Refer to PG-26, "Removal and Installation of IPDM E/R" .
NG >> GO TO 2.

2. CHECK IPDM E/R

1. Turn ignition switch ON.
2. Check voltage between IPDM E/R connector and ground while front wiper motor is stopped and while it is operating.

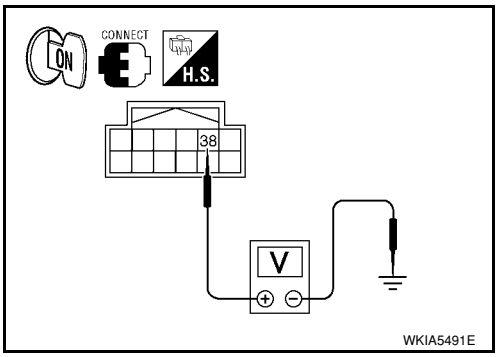

Terminal			Condition	Voltage (Approx.)
(+)		(-)		
IPDM E/R connector	Terminal			
E46	38	Ground	Wiper stopped	0V
			Wiper operating	Battery voltage

OK or NG

OK >> Replace IPDM E/R. Refer to PG-26, "Removal and Installation of IPDM E/R" .
NG >> GO TO 3.

3. CHECK FRONT WIPER AUTO STOP CIRCUIT

1. Turn ignition switch OFF.
2. Disconnect IPDM E/R and wiper motor.
3. Check continuity between IPDM E/R connector (A) and front wiper motor connector (B).

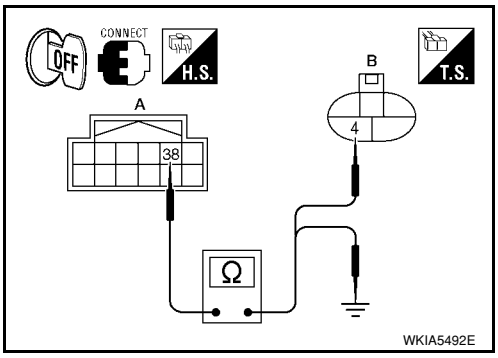

A		B		Continuity
Connector	Terminal	Connector	Terminal	
E46	38	E1	4	Yes

4. Check continuity between IPDM E/R harness connector (A) and ground.

A		Ground	Continuity
Connector	Terminal		
E46	38		No

OK or NG

OK >> Replace front wiper motor. Refer to WW-19, "Removal and Installation of Front Wiper Drive Assembly" .

NG >> Repair or replace harness.

Only Front Wiper Low Does Not Operate

INFOID:0000000001704548

1. ACTIVE TEST

With CONSULT-III

1. Select “IPDM E/R” on CONSULT-III, and select “ACTIVE TEST” on “SELECT DIAG MODE” screen.
2. Select “FRONT WIPER” on “SELECT TEST ITEM” screen.
3. Touch “LO” screen.

Without CONSULT-III

Start auto active test. Refer to PG-19, "Auto Active Test" .

Does front wiper operate normally?

YES >> Refer to LT-63, "Combination Switch Inspection" .

NO >> GO TO 2.

2. CHECK FRONT WIPER MOTOR CIRCUIT

1. Turn ignition switch OFF.
2. Disconnect IPDM E/R and front wiper motor.
3. Check continuity between IPDM E/R connector (A) and front wiper motor connector (B).

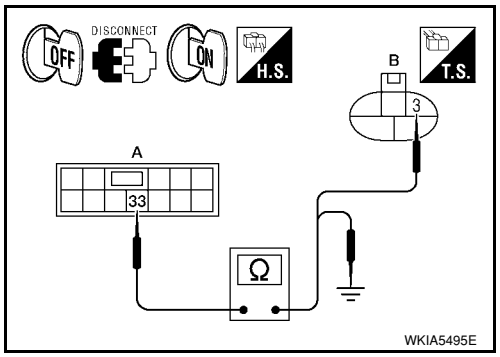

A		B		Continuity
Connector	Terminal	Connector	Terminal	
E45	33	E1	3	Yes

4. Check continuity between IPDM E/R harness connector (A) and ground.

A		Ground	Continuity
Connector	Terminal		
E45	33		No

OK or NG

OK >> GO TO 3.

NG >> Repair or replace harness.

3. CHECK IPDM E/R

With CONSULT-III

1. Connect IPDM E/R.
2. Turn ignition ON.
3. Select “IPDM E/R” on CONSULT-III, and select “ACTIVE TEST” on “SELECT DIAG MODE” screen.
4. Select “FRONT WIPER” on “SELECT TEST ITEM” screen.
5. Touch “LO” screen.
6. Check voltage between IPDM E/R connector and ground while front wiper LO is operating.

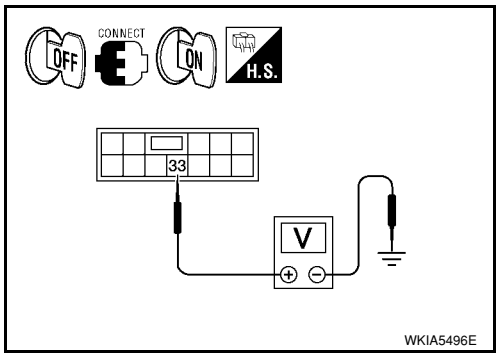

Terminal			Continuity
(+)		(-)	
IPDM E/R connector	Terminal		
E45	33	Ground	Battery voltage

Without CONSULT-III

1. Connect IPDM E/R.
2. Turn ignition ON.
3. Start auto active test. Refer to PG-19, "Auto Active Test" .
4. Check voltage between IPDM E/R connector and ground while front wiper LO is operating.

Terminal			Continuity
(+)		(-)	
IPDM E/R connector	Terminal		
E45	33	Ground	Battery voltage

OK or NG

OK >> Replace front wiper motor. Refer to WW-19, "Removal and Installation of Front Wiper Drive Assembly" .
NG >> Replace IPDM E/R. Refer to PG-26, "Removal and Installation of IPDM E/R" .

Only Front Wiper High Does Not Operate

INFOID:0000000001704549

1. ACTIVE TEST

With CONSULT-III
1. Select “IPDM E/R” on CONSULT-III, and select “ACTIVE TEST” on “SELECT DIAG MODE” screen.
2. Select “FRONT WIPER” on “SELECT TEST ITEM” screen.
3. Touch “HI” screen.

Without CONSULT-III
Start auto active test. Refer to PG-19, "Auto Active Test" .

Does front wiper operate normally?

YES >> Refer to LT-63, "Combination Switch Inspection" .
NO >> GO TO 2.

2. CHECK FRONT WIPER MOTOR CIRCUIT

1. Turn ignition switch OFF.
2. Disconnect IPDM E/R connector E45 and front wiper motor connector E1.
3. Check continuity between IPDM E/R connector (A) E45 terminal 32 and front wiper motor connector (B) E1 terminal 1.

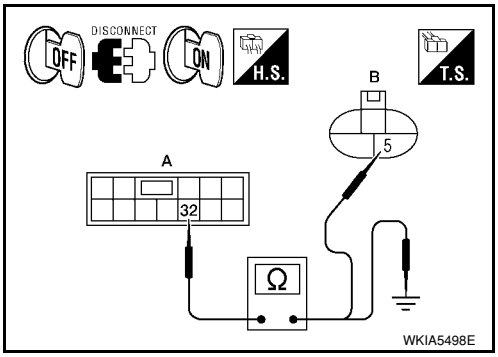

A		B		Continuity
Connector	Terminal	Connector	Terminal	
E45	32	E1	5	Yes

4. Check continuity between IPDM E/R harness connector (A) E45 terminal 32 and ground.

A		Ground	Continuity
Connector	Terminal		
E45	32		No

OK or NG

OK >> GO TO 3.
NG >> Repair or replace harness.

3. CHECK IPDM E/R

With CONSULT-III
1. Connect IPDM E/R connector E45.
2. Turn ignition switch ON.
3. Select “IPDM E/R” on CONSULT-III, and select “ACTIVE TEST” on “SELECT DIAG MODE” screen.
4. Select “FRONT WIPER” on “SELECT TEST ITEM” screen.

5. Touch “HI” screen.
6. Check voltage between IPDM E/R connector E45 terminal 32 and ground while front wiper HI is operating.

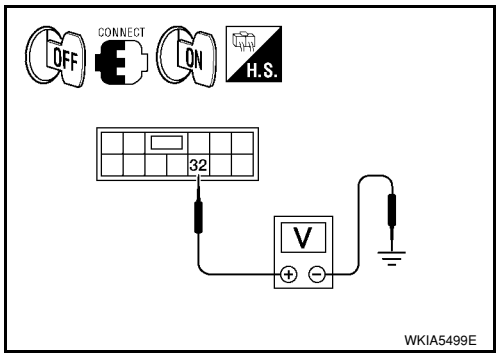

Terminal			Voltage (Approx.)
(+)		(-)	
IPDM E/R connector	Terminal		
E45	32	Ground	Battery voltage

Without CONSULT-III
1. Connect IPDM E/R connector E45.
2. Turn ignition switch ON.
3. Start auto active test. Refer to PG-19, "Auto Active Test" .
4. Check voltage between IPDM E/R connector E45 terminal 32 and ground while front wiper HI is operating.

Terminal			Voltage (Approx.)
(+)		(-)	
IPDM E/R connector	Terminal		
E45	32	Ground	Battery voltage

OK or NG

OK >> Replace front wiper motor. Refer to WW-19, "Removal and Installation of Front Wiper Drive Assembly" .
NG >> Replace IPDM E/R. Refer to PG-26, "Removal and Installation of IPDM E/R" .

Only Front Wiper Intermittent Does Not Operate

INFOID:0000000001704550

1. CHECK COMBINATION SWITCH

With CONSULT-III
1. Select “BCM” on CONSULT-III, and select “WIPER” on “SELECT TEST ITEM” screen.
2. Select “DATA MONITOR” on “SELECT DIAG MODE” screen. Make sure that “FR WIPER INT”, turn ON-OFF according to wiper switch operation.

Without CONSULT-III
Refer to LT-63, "Combination Switch Inspection" .

OK or NG

OK >> Replace BCM. Refer to BCS-18, "Removal and Installation of BCM" .
NG >> Check combination switch (wiper switch). Refer to LT-63, "Combination Switch Inspection" .

Front Wiper Intermittent Operation Switch Position Cannot Be Adjusted

INFOID:0000000001704551

1. CHECK CIRCUIT BETWEEN COMBINATION SWITCH AND BCM

With CONSULT-III
1. Select “BCM” on CONSULT-III, and select “WIPER” on “SELECT TEST ITEM” screen.
2. Select “DATA MONITOR” on “SELECT DIAG MODE” screen. Make sure that “INT VOLUME”, changes in order from 1 to 7 according to wiper switch operation.

Without CONSULT-III
Refer to LT-63, "Combination Switch Inspection" .

OK or NG

OK >> Replace BCM. Refer to BCS-18, "Removal and Installation of BCM" .
NG >> Check combination switch (wiper switch). Refer to LT-63, "Combination Switch Inspection" .

Wiper Does Not Wipe When Front Washer Operates

INFOID:0000000001704552

1. CHECK CIRCUIT BETWEEN COMBINATION SWITCH AND BCM

With CONSULT-III
1. Select “BCM” on CONSULT-III, and select “WIPER” on “SELECT TEST ITEM” screen.
2. Select “DATA MONITOR” on “SELECT DIAG MODE” screen. Make sure that “FR WASHER SW” turn ON-OFF according to front wiper switch operation.

Without CONSULT-III
Refer to LT-63, "Combination Switch Inspection" .

OK or NG

OK >> Replace BCM. Refer to BCS-18, "Removal and Installation of BCM" .
NG >> Check combination switch (wiper switch). Refer to LT-63, "Combination Switch Inspection" .

Front Wiper Does Not Stop

INFOID:0000000001704553

1. CHECK CIRCUIT BETWEEN COMBINATION SWITCH AND BCM

With CONSULT-III
1. Select “BCM” on CONSULT-III, and select “WIPER” on “SELECT TEST ITEM” screen.
2. Select “DATA MONITOR” on “SELECT DIAG MODE” screen. Make sure that “FR WIPER INT”, “FR WIPER LOW”, “FR WIPER HI”, and “FR WASHER SW” turn ON-OFF according to front wiper switch operation.

Without CONSULT-III
Refer to LT-63, "Combination Switch Inspection" .

OK or NG

OK >> Replace IPDM E/R. Refer to PG-25, "IPDM E/R Power/Ground Circuit Inspection" .
NG >> Check combination switch (wiper switch). Refer to LT-63, "Combination Switch Inspection" .

Removal and Installation of Front Wiper Arms

INFOID:0000000001704554

REMOVAL

1. Turn wiper switch on to operate wiper motor, and then turn wiper switch off (auto stop).
2. Open hood, remove wiper arm caps, and remove wiper arm nuts.
3. Raise wiper arm, and remove wiper arm from the vehicle.

INSTALLATION

1. Clean up the pivot area as shown. This will reduce possibility of wiper arm looseness.
2. Prior to wiper arm installation, turn on wiper switch to operate wiper motor and then turn it off (auto stop).
3. Push wiper arm onto pivot shaft, paying attention to blind spline.

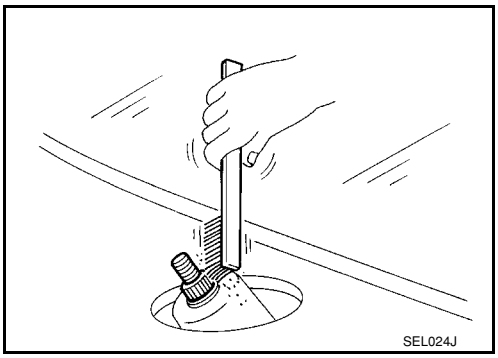

4. Lift the blade up and then set it down onto glass surface to set the blade center to clearance “L1” and “L2” immediately before temporarily tightening the wiper arm nuts.
5. Spray washer fluid. Turn on wiper switch to operate wiper motor and then turn it off.
6. Make sure that wiper blades stop within clearance “L1” and “L2” and reposition as necessary.

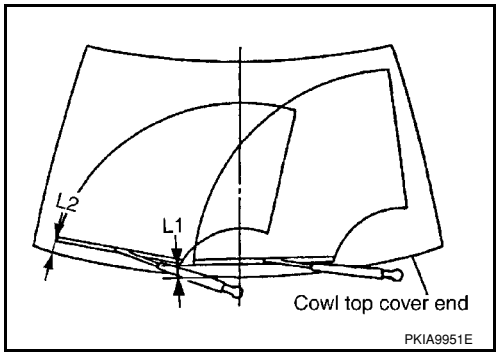

Clearance “L1” : 38.7 ± 7.5 mm (1.524 ± 0.295 in)
Clearance “L2” : 38.4 ± 7.5 mm (1.512 ± 0.295 in)

7. Tighten wiper arm nuts to specification.
8. Attach wiper arm caps.

Adjustment of Wiper Arm Stop Location

INFOID:0000000001704555

ADJUSTMENT

To adjust the wiper arm stop location, the wiper arm must be removed and installed. Refer to "Adjustment of Wiper Arm Stop Location " .

Removal and Installation of Front Wiper Drive Assembly

INFOID:0000000001704556

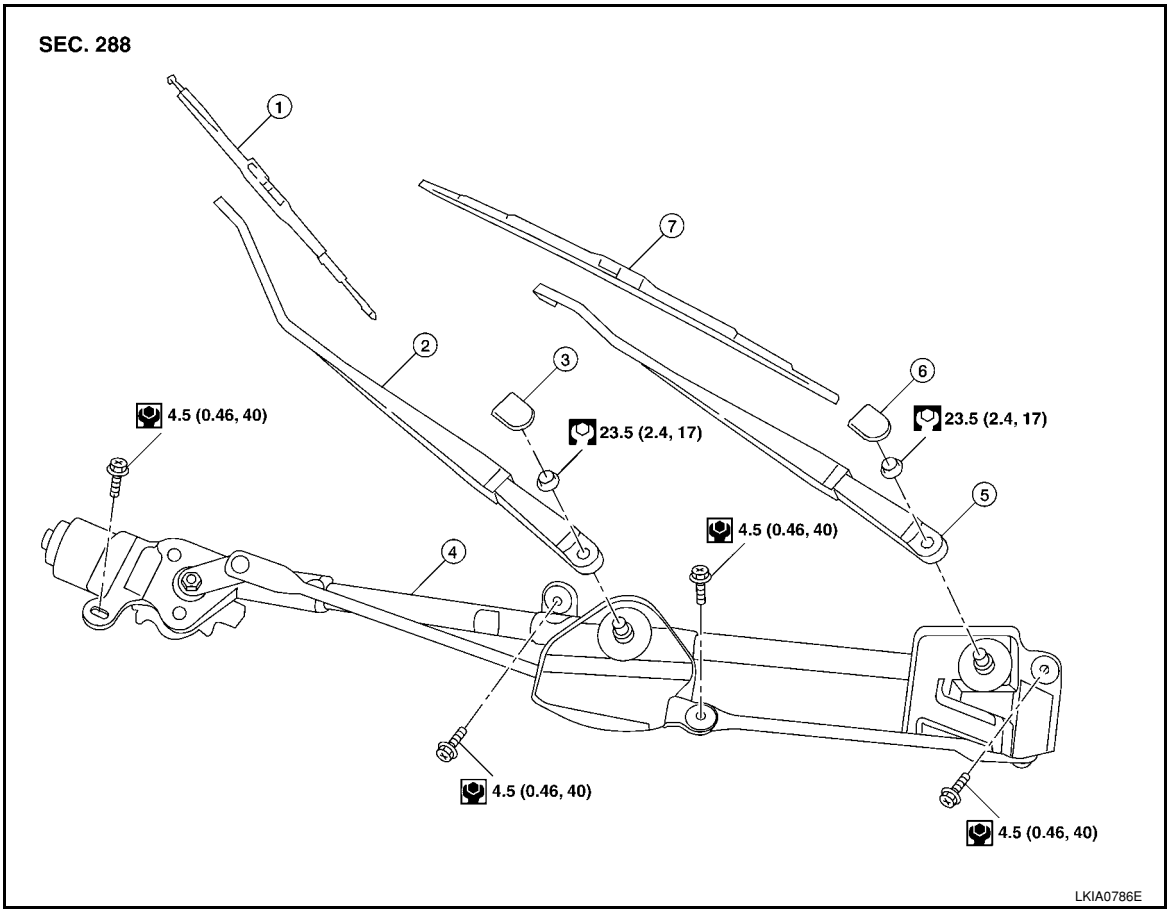

1. Front RH wiper blade
2. Front RH wiper arm
3. Wiper arm cap
4. Front wiper drive assembly
5. Front LH wiper arm
6. Wiper arm cap
7. Front LH wiper blade

REMOVAL

1. Operate the front wiper motor, and stop at the auto stop position.

2. Remove wiper arms. Refer to WW-18, "Removal and Installation of Front Wiper Arms" .
3. Remove cowl top cover. Refer to EI-21 .
4. Disconnect wiper motor connector.
5. Remove front wiper drive assembly bolts, and remove front wiper drive assembly.

INSTALLATION

1. Install front wiper drive assembly.
2. Connect wiper motor connector. Turn wiper switch on to operate wiper motor, then turn wiper switch off (auto stop).
3. Install cowl top cover. Refer to EI-21 .
4. Install the wiper arms. Refer to WW-18, "Removal and Installation of Front Wiper Arms" .

Removal and Installation of Front Washer Nozzle

INFOID:0000000001704557

REMOVAL

1. Remove cowl top cover. Refer to EI-21, "Removal and Installation" .
2. Remove washer tube.
3. While pressing pawl (A) on the reverse side of front washer nozzle (1), remove front washer nozzle (1) from cowl top cover.

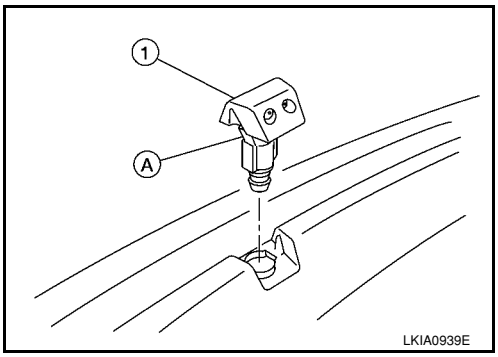

INSTALLATION

1. Install washer tube in nozzle.
2. Install nozzle to the vehicle.
3. Adjust nozzle spray location. Refer to WW-21, "Washer Nozzle Adjustment" .
   CAUTION:
   The spray points differ, so be sure to install left and right nozzles correctly.

Inspection for Washer Nozzle

INFOID:0000000001704558

CHECK VALVE INSPECTION

Blow air in the injection direction, and make sure that air flows only one way. Make sure that the reverse direction is not possible.

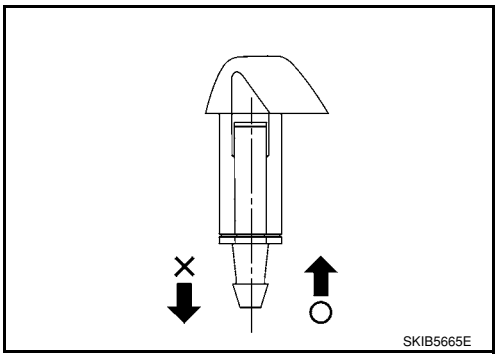

Washer Nozzle Adjustment

INFOID:0000000001704559

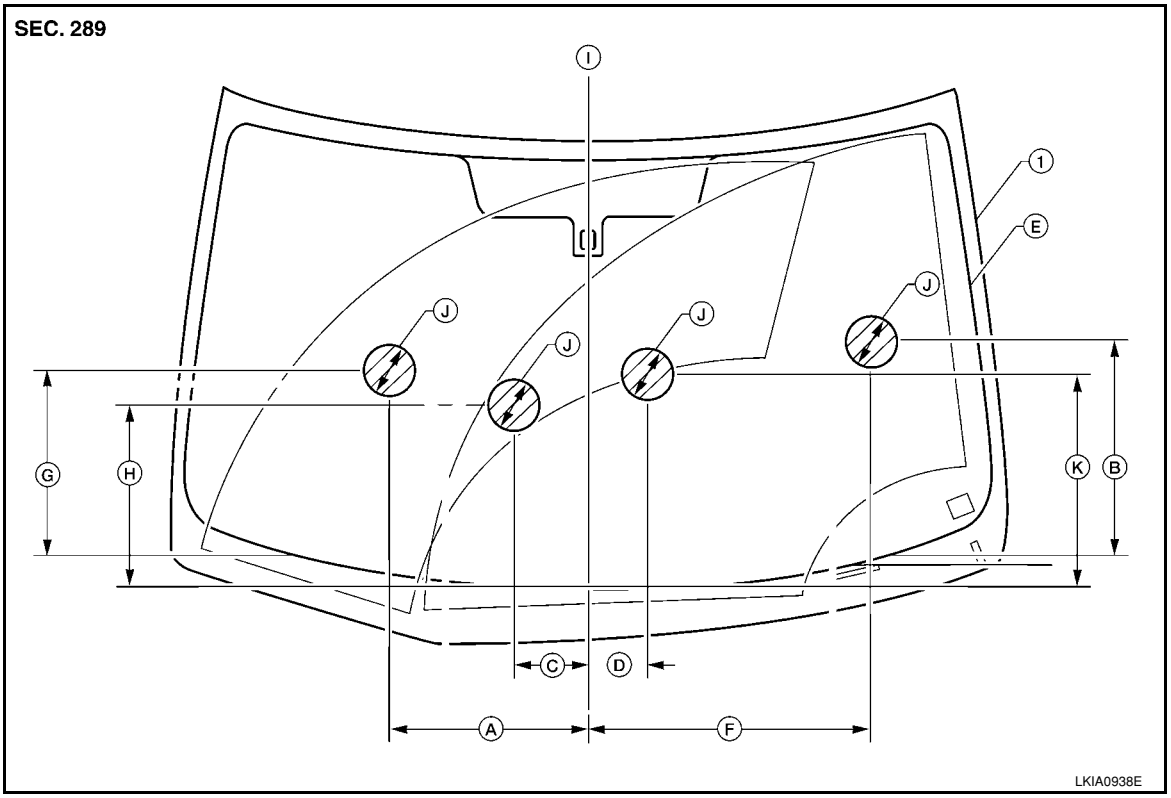

1.	Windshield	A.	395 mm (15.55 in)	B.	216 mm (8.50 in)
C.	100 mm (3.94 in)	D.	85 mm (3.35 in)	E.	Black mask
F.	303 mm (11.93 in)	G.	212 mm (8.35 in)	H.	249 mm (9.80 in)
I.	Center of windsheild	J.	Spray pattern area	K.	286 mm (11.26 in)

- Adjust spray positions to match the positions as shown.
- Insert a suitable tool into the nozzle hole and move up/down and left/right to adjust to the specified spray position.

Washer Tube Layout

INFOID:0000000001704560

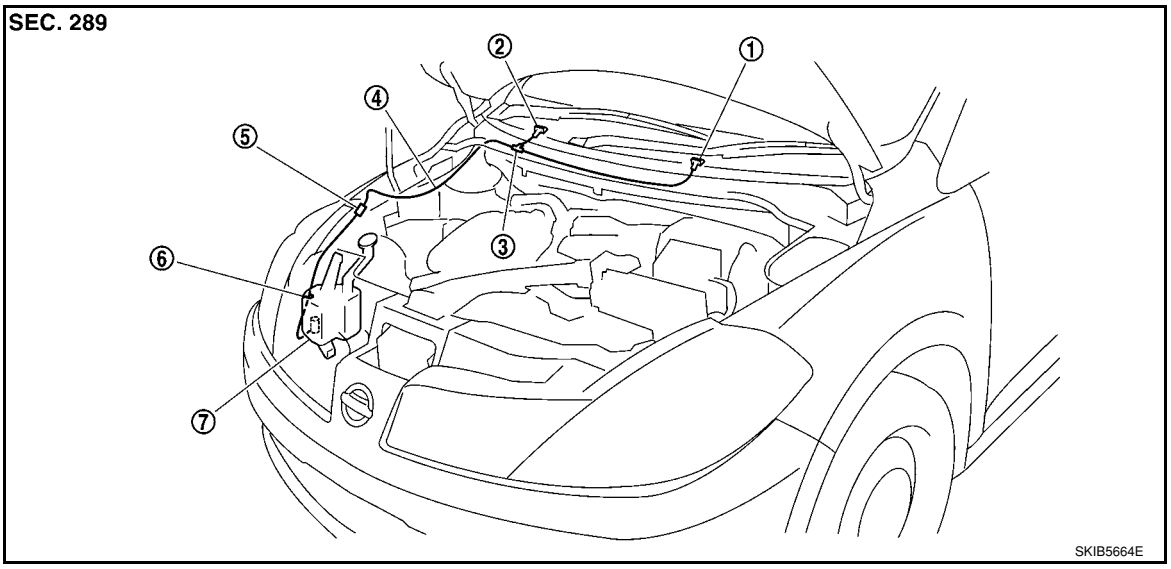

1. Washer nozzle LH
2. Washer nozzle RH
3. Joint washer tube
4. Washer tube
5. Clip
6. Clamp
7. Washer tank

Removal and Installation of Front Wiper and Washer Switch

INFOID:0000000001704561

REMOVAL

1. Remove the steering column cover. Refer to IP-10 .
2. Disconnect the wiper and washer switch connector.
3. Pull wiper and washer switch (1) toward the passenger door while pressing pawls (A) in direction shown by the arrow, and remove it from the base.

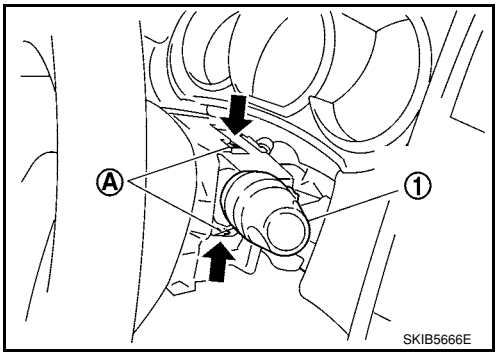

INSTALLATION

Installation is in the reverse order of removal.

Inspection of Front Wiper and Washer Switch Circuit

INFOID:0000000001704562

Refer to LT-63, "Combination Switch Inspection" .

Removal and Installation of Washer Tank

INFOID:0000000001704563

REMOVAL

1. Remove the front grille. Refer to EI-20, "Removal and Installation" .
2. Remove clip (A) and pull washer tank inlet (1) out of washer tank.
   - ⇦: Vehicle front

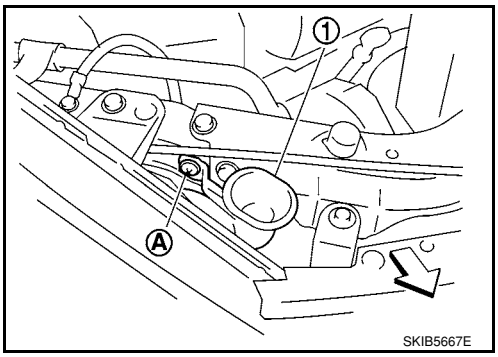

3. Remove the front bumper. Refer to EI-14, "Removal and Installation" .
4. Disconnect the washer motor connector and washer fluid level sensor connector.
5. Remove the washer tank screw (A).
   - ⇦: Vehicle front
6. Remove the washer tube (1), and remove washer tank (2) from the vehicle.
   - ⇦: Vehicle front

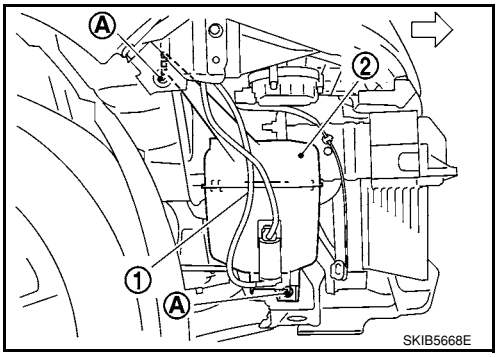

INSTALLATION

Installation is in the reverse order of removal.

Washer tank nuts	**: 4.5 N·m (0.46 kg-m, 40 in-lb)**
Washer tank screw	**: 4.5 N·m (0.46 kg-m, 40 in-lb)**

CAUTION:

After installation, add water up to the upper level of washer tank inlet, and check for water leaks.

Removal and Installation of Front Washer Motor

INFOID:0000000001704564

REMOVAL

1. Remove the front fender protector RH. Refer to EI-23 .
2. Disconnect washer motor connector (1) and remove washer tube.
   - ⇦: Vehicle front
3. Pull out front washer motor (2) in the direction shown. Remove the front washer motor (2) from washer tank.
   - ⇦: Vehicle front

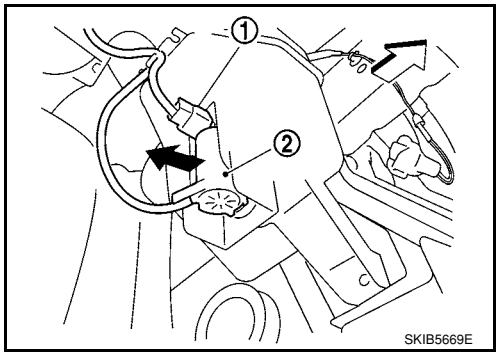

INSTALLATION

Installation is in the reverse order of removal.

CAUTION:

When installing washer motor, there should be no packing twists, etc.

REAR WIPER AND WASHER SYSTEM

Component Parts and Harness Connector Location

INFOID:0000000001704565

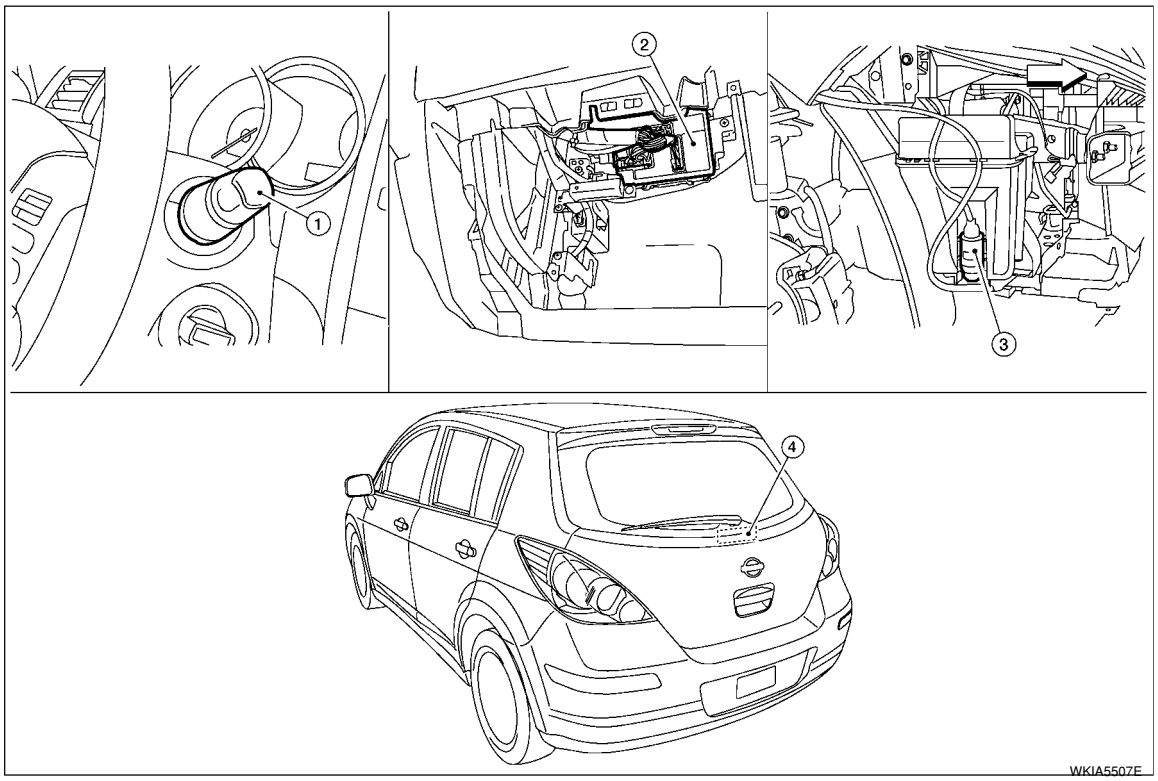

1.	Combination switch (wiper switch) M28	2.	BCM M18 and M20 (view with glove box removed)	3.	Front and rear washer motor E2 (view with front fender protector LH removed)
4.	Rear wiper motor D404				

System Description

INFOID:0000000001704566

- The wiper switch (combination switch) is composed of a combination of 5 output terminals and 5 input terminals. Terminal combination status is read by the BCM (body control module) when switch is turned ON.
- The BCM controls rear wiper ON and INT (intermittent) operation.

Power is supplied at all times
- through 40A fusible link (letter **g** , located in fuse and fusible link box)
- to BCM terminal 70.

With the ignition switch in ON or START position, power is supplied
- through 15A fuse [No. 4, located in the fuse block (J/B)]
- to combination switch terminal 2
- through 10A fuse [No. 6, located in the fuse block (J/B)]
- to BCM terminal 38.

Ground is supplied
- to BCM terminal 67, and
- to combination switch terminal 12
- through grounds M57 and M61.

REAR WIPER OPERATION

When the ignition switch is in the ON or START position, and the rear wiper switch is in the ON position, the BCM detects a rear wiper ON request through the combination switch (wiper switch) reading function and controls the rear wiper motor as follows.

Power is supplied
- through BCM terminal 55
- to rear wiper motor terminal 1.

Ground is supplied
- to rear wiper motor terminal 3

• through grounds B117, B132 and D402.
With power and ground supplied, the rear wiper motor operates.

INTERMITTENT OPERATION

The rear wiper motor operates the wiper arm at low speed approximately every 7 seconds.
When the wiper switch is in the rear wiper INT position, the BCM detects a rear wiper INT request through the combination switch (wiper switch) reading function.
When BCM operates rear wiper motor, power is supplied
• through BCM terminal 55
• to rear wiper motor terminal 1.
Ground is supplied
• to rear wiper motor terminal 3
• through grounds B117, B132 and D402.
With power and ground supplied, the rear wiper operates in intermittent mode.

AUTO STOP OPERATION

When the rear wiper arm is not located at the base of the rear window, and the rear wiper switch is turned OFF, the rear wiper motor will continue to operate until the rear wiper arm is at the base of the rear window.
When the rear wiper arm reaches the base, rear wiper motor terminals 2 and 1 are connected.
Ground is supplied
• to BCM terminal 44
• through rear wiper motor terminal 2, and
• through rear wiper motor terminal 3, and
• through grounds B117, B132 and D402.

REAR WASHER OPERATION

When the ignition switch is in the ON or START position, and the front and rear washer switches are OFF, the front and rear washer motor is supplied power
• through 15A fuse [No. 4, located in the fuse block (J/B)]
• to combination switch (wiper switch) terminal 14
• through combination switch (wiper switch) terminal 11
• to front and rear washer motor terminal 2.
When the rear wiper switch is in rear washer position, the BCM detects a rear washer signal by BCM wiper switch reading function. Combination switch ground is supplied
• to front and rear washer motor terminal 1
• through combination switch (wiper switch) terminal 13, and
• through combination switch (wiper switch) terminal 12
• through grounds M57 and M61.
With ground supplied, the front and rear washer motor is operated in the rear direction.
When the BCM detects that the rear washer motor has operated for 0.4 seconds or longer, BCM operates the rear wiper motor.
When the BCM detects that the rear washer switch is in OFF, the rear wiper motor cycles approximately 3 times and then stops.
If the rear washer is operated with the rear wiper switch in the INT position, normal rear wiper operation will take over. Once the rear washer switch is released the rear wiper will return to INT operation.

BCM Combination Switch Reading Function

Refer to BCS-3, "System Description" .

Wiring Diagram - WIP/R -

INFOID:0000000001704567

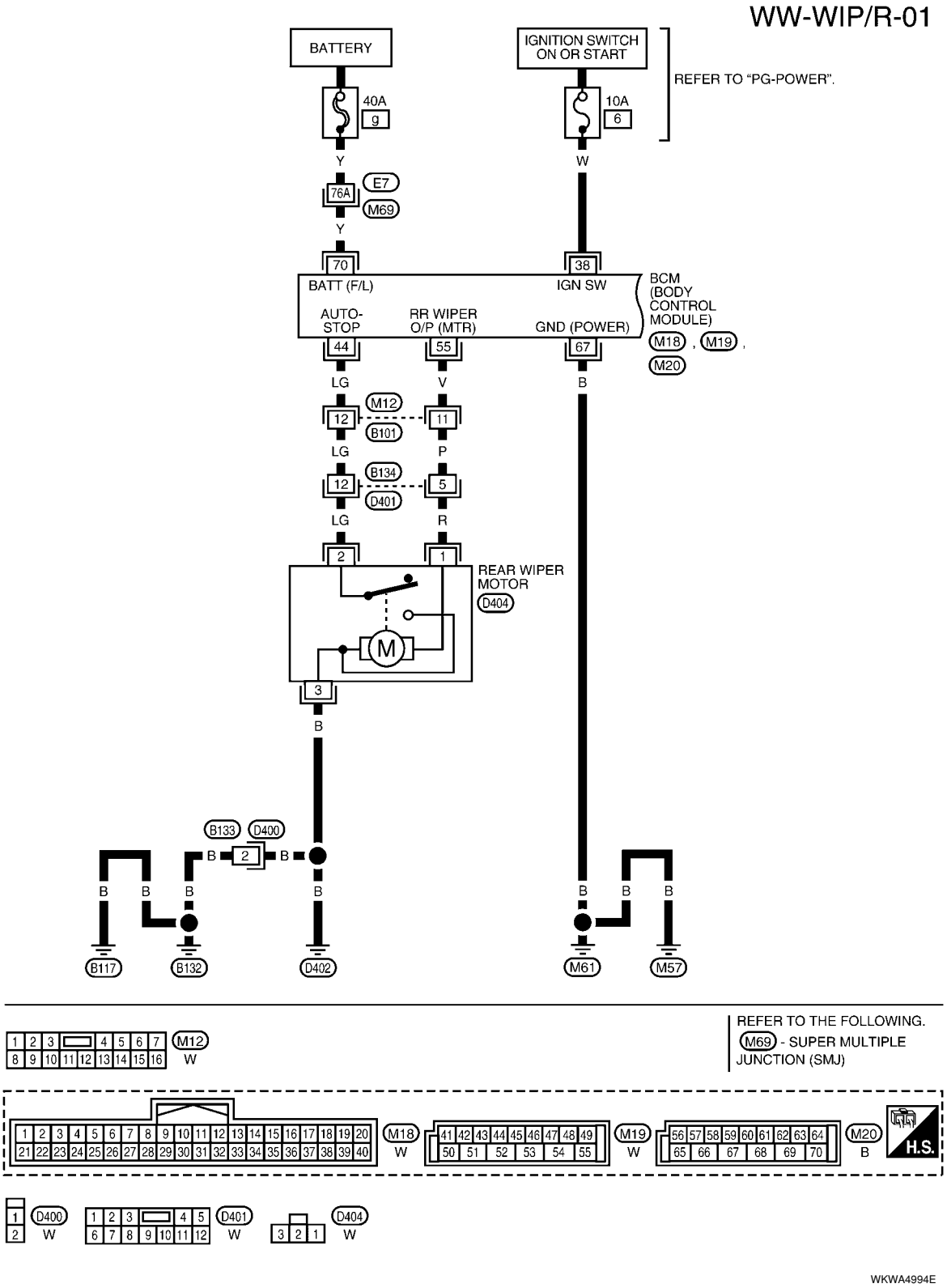

WKWA4994E

WW-WIP/R-02

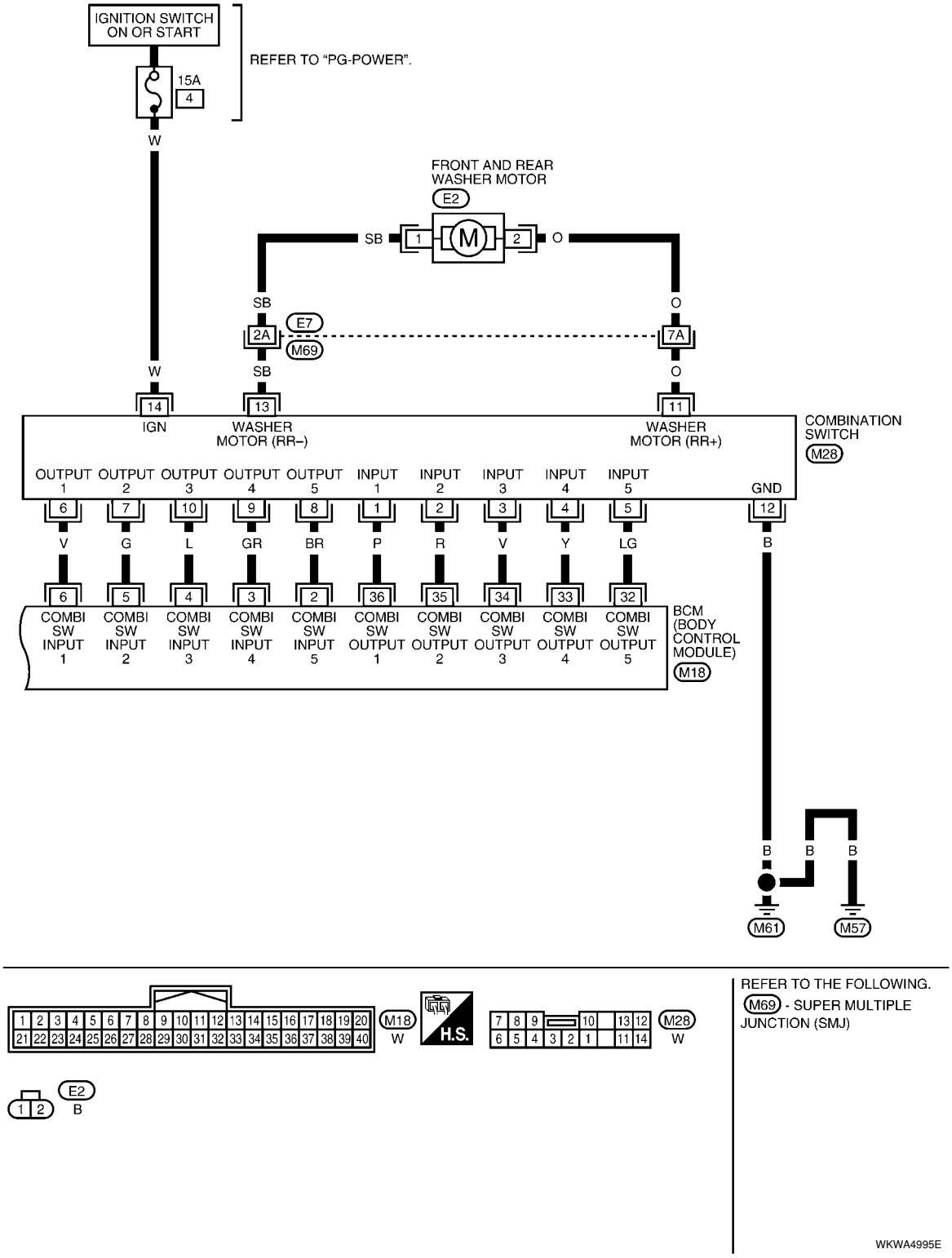

Terminal and Reference Value for BCM

INFOID:0000000001704568

Refer to BCS-11, "Terminal and Reference Value for BCM" .

How to Proceed with Trouble Diagnosis

INFOID:0000000001704569

1. Confirm the symptoms and customer complaint.
2. Understand operation description and function description. Refer to WW-24, "System Description" .

3. Perform the Preliminary Check. Refer to WW-28, "Preliminary Check" .
4. Check symptom and repair or replace the cause of malfunction.
5. Does the rear wiper operate normally? If YES: GO TO 6. If NO: GO TO 4.
6. Inspection End.

Preliminary Check

INFOID:0000000001704570

CHECK POWER SUPPLY AND GROUND CIRCUIT FOR BCM

Refer to BCS-15, "BCM Power Supply and Ground Circuit Inspection" .

CONSULT-III Function (BCM)

INFOID:0000000001704571

Refer to WW-10, "CONSULT-III Function (BCM)" .

Rear Wiper Does Not Operate

INFOID:0000000001704572

1. REAR WIPER ACTIVE TEST

1. Select "BCM" on CONSULT-III, and select "WIPER" on "SELECT TEST ITEM" screen.
2. Select "ACTIVE TEST" on "SELECT DIAG MODE" screen.
3. Select "RR WIPER" on "SELECT TEST ITEM" screen.
4. Make sure rear wiper operates.

Wiper should operate.

OK or NG

OK >> GO TO 6.
NG >> GO TO 2.

2. CHECK REAR WIPER MOTOR CIRCUIT

1. Turn ignition switch OFF.
2. Disconnect BCM and rear wiper motor.
3. Check continuity between rear wiper motor connector (A) D404 terminal 1and BCM connector (B) M19 terminal 55.

55 - 1 : Continuity should exist.

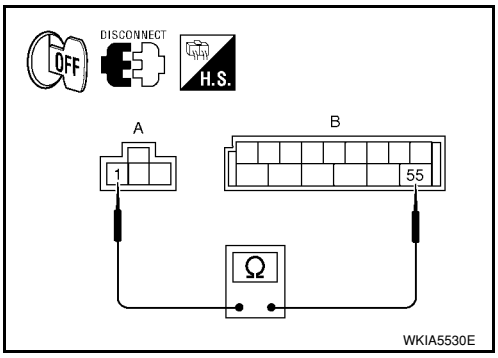

OK or NO

OK >> GO TO 3.
NO >> Repair or replace harness.

3. CHECK REAR WIPER MOTOR SHORT CIRCUIT

Check continuity between rear wiper motor harness D404 terminal 1 and ground.

1 - Ground : Continuity should not exist.

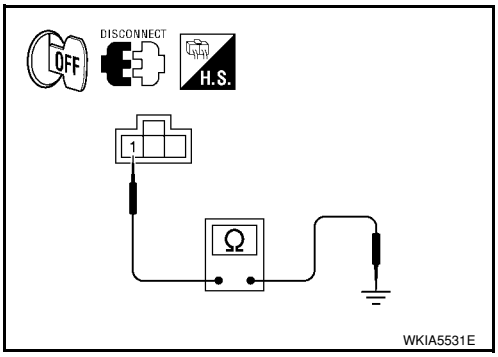

OK or NG

OK >> GO TO 4.
NG >> Repair or replace harness.

4. CHECK GROUND CIRCUIT

Check continuity between rear wiper motor connector D404 terminal 3 and ground.

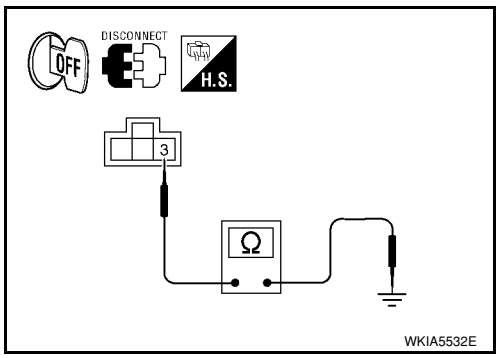

3 - Ground : Continuity should exist.

OK or NG

OK >> GO TO 5.
NG >> Repair or replace harness.

5. CHECK REAR WIPER OPERATING

1. Connect BCM and rear wiper motor.
2. Select "RR WIPER" during "ACTIVE TEST". Refer to WW-11, "CONSULT-III Function (IPDM E/R)" . When rear wiper is operating, check voltage between BCM harness connector and ground.

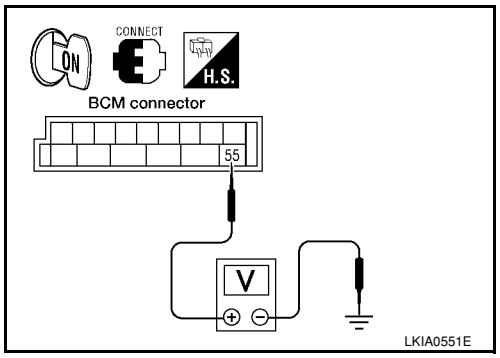

BCM (+) Connector	BCM (+) Terminal	(–)	Condition	Voltage (Approx.)
M19	55	Ground	Stopped	0V
			ON operation	Battery voltage

OK or NG

OK >> Replace rear wiper motor. Refer to WW-31, "Removal and Installation" .
NG >> Replace BCM. Refer to BCS-18, "Removal and Installation of BCM" .

6. CHECK COMBINATION SWITCH INPUT SIGNAL

Select "BCM" on CONSULT-III. With "WIPER" data monitor, make sure "RR WIPER INT", "RR WIPER ON" turn ON-OFF according to operation of wiper switch.

When wiper switch is in INT position : RR WIPER INT ON

When wiper switch is in ON position : RR WIPER ON ON

OK or NG

OK >> Replace BCM. Refer to BCS-18, "Removal and Installation of BCM" .
NG >> Check the wiper switch. Refer to BCS-3, "System Description" .

Rear Wiper Stop Position Is Incorrect

INFOID:0000000001704573

1. CHECK COMBINATION SWITCH INPUT SIGNAL

Select "BCM" on CONSULT-III. With "WIPER" data monitor, make sure "RR WIPER STOP" turns ON-OFF according to wiper operation.

When wiper switch is in OFF position : RR WIPER STOP OFF

OK or NG

OK >> Replace BCM. Refer to BCS-18, "Removal and Installation of BCM" .
NG >> GO TO 2.

2. CHECK REAR WIPER MOTOR CIRCUIT

1. Turn ignition switch OFF.
2. Disconnect BCM and rear wiper motor.
3. Check continuity between rear wiper motor connector (A) D404 terminal 2 and BCM connector (B) M19 terminal 44.

44 - 2 : Continuity should exist.

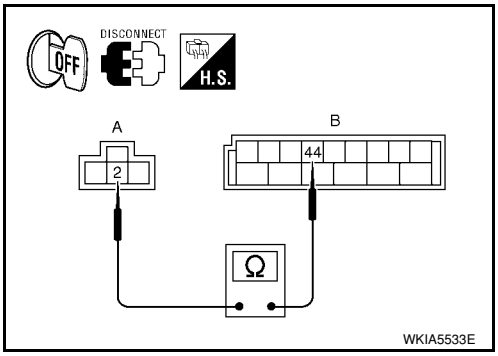

OK or NG

OK >> GO TO 3.
NG >> Repair or replace harness.

3. CHECK REAR WIPER MOTOR SHORT CIRCUIT

Check continuity between rear wiper motor connector D404 terminal 2 and ground.

2 - Ground : Continuity should not exist.

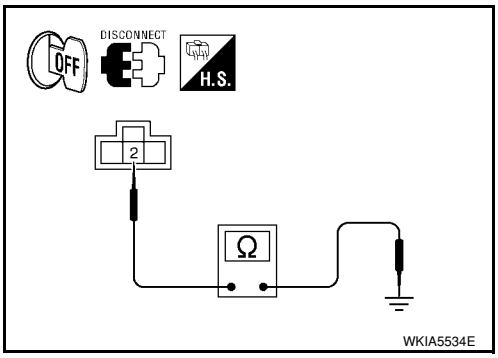

OK or NG

OK >> GO TO 4.
NG >> Repair or replace harness.

4. CHECK GROUND CIRCUIT

Check continuity between rear wiper motor connector D404 terminal 3 and ground.

3 - Ground : Continuity should exist.

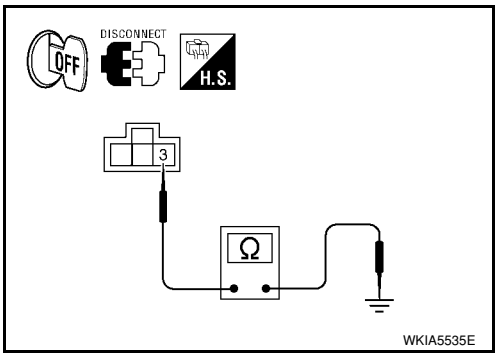

OK or NG

OK >> GO TO 5.
NG >> Repair or replace harness.

5. CHECK AUTO STOP SIGNAL

1. Connect BCM.
2. Turn ignition switch ON.
3. Check voltage between rear wiper motor connector D404 terminal 2 and ground.

2 - Ground : Battery voltage should exist.

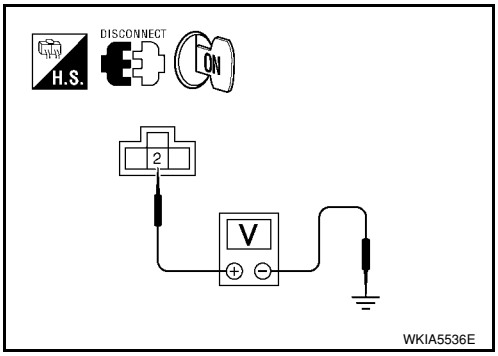

OK or NG

OK >> Replace BCM. Refer to BCS-18, "Removal and Installation of BCM" .
NG >> Replace rear wiper motor. Refer to WW-31, "Removal and Installation" .

Only Rear Wiper Does Not Operate

INFOID:0000000001704574

1. CHECK COMBINATION SWITCH INPUT SIGNAL

Select "BCM" on CONSULT-III. With "WIPER" data monitor, make sure "RR WIPER ON" turns ON-OFF according to operation of wiper switch.

When rear wiper switch is in ON position **: RR WIPER ON ON**

OK or NG

OK >> Replace BCM. Refer to BCS-18, "Removal and Installation of BCM" .
NG >> Check the wiper switch. Refer to BCS-3, "System Description" .

Only Rear Wiper Intermittent Does Not Operate

INFOID:0000000001704575

1. CHECK COMBINATION SWITCH INPUT SIGNAL

Select "BCM" on CONSULT-III. With "WIPER" data monitor, make sure "RR WIPER INT" turns ON-OFF according to operation of wiper switch.

When rear wiper switch is in INT position **: RR WIPER INT ON**

OK or NG

OK >> Replace BCM. Refer to BCS-18, "Removal and Installation of BCM" .
NG >> Check the wiper switch. Refer to BCS-3, "System Description" .

Wiper Does Not Wipe When Rear Washer Operates

INFOID:0000000001704576

1. CHECK COMBINATION SWITCH INPUT SIGNAL

Select "BCM" on CONSULT-III. With "WIPER" data monitor, make sure "RR WASHER SW" turns ON-OFF according to operation of rear washer switch.

When rear wiper switch is in WASHER position **: RR WASHER SW ON**

OK or NG

OK >> Replace BCM. Refer to BCS-18, "Removal and Installation of BCM" .
NG >> Check the wiper switch. Refer to BCS-3, "System Description" .

Removal and Installation

INFOID:0000000001704577

REAR WIPER ARM

Removal

1. Raise wiper arm cover (1), and remove the rear wiper arm nut (A).
2. Remove the wiper arm.
3. Remove wiper blade.

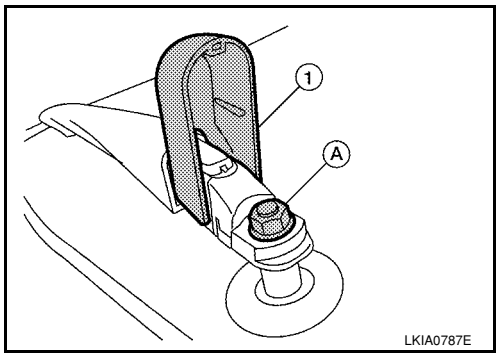

Installation

1. Operate rear wiper motor one full cycle, then turn "OFF" (Auto Stop).

2. Clean pivot area as shown. This will reduce the possibility of wiper arm looseness.
3. Install wiper blade.
4. Install wiper arm so that the arm rests in the stopper and tighten rear wiper arm nut.
5. Install wiper arm cover.

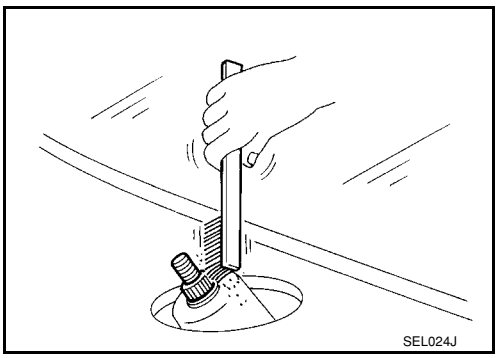

REAR WIPER MOTOR

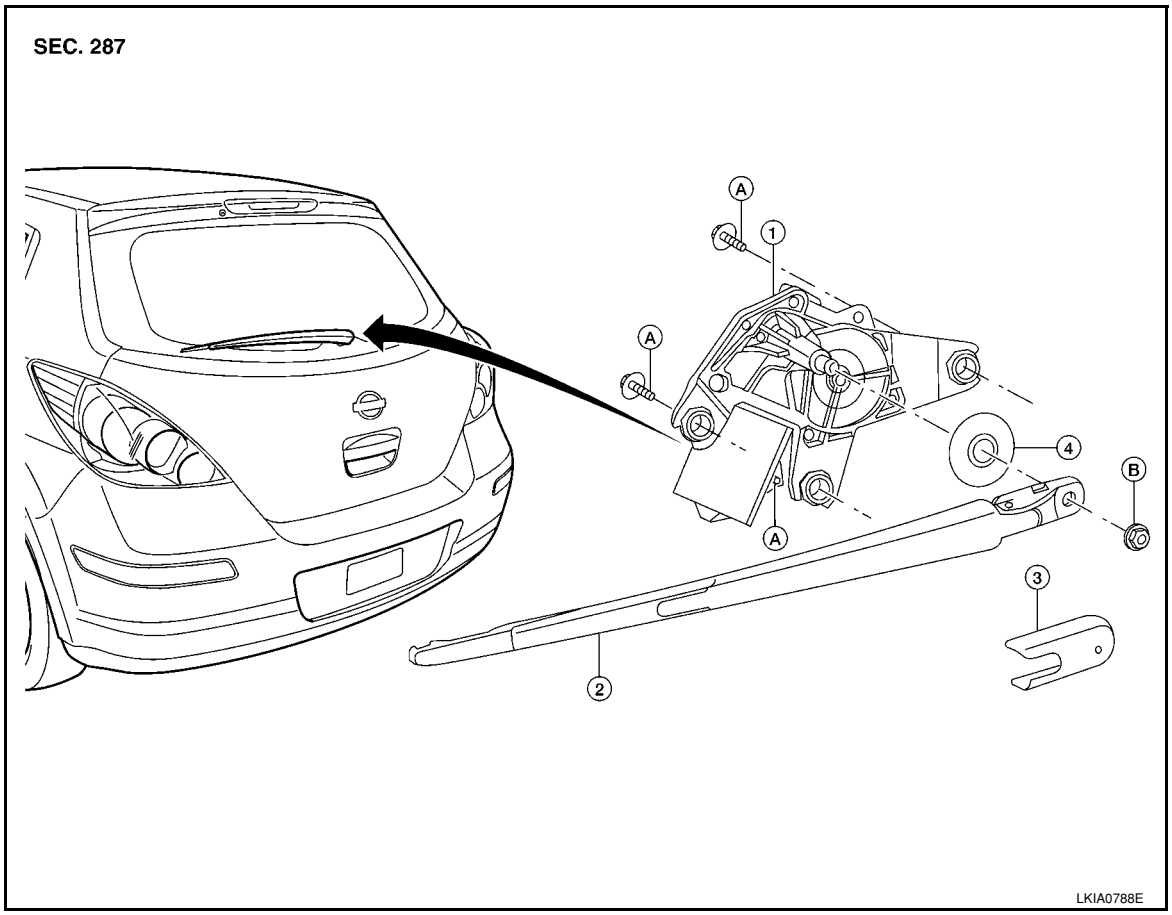

1. Rear wiper motor	2. Rear wiper arm and blade	3. Wiper arm cover
4. Pivot cap	A. Wiper motor bolts	B. Rear wiper motor nut

Removal

1. Remove wiper arm. Refer to "REAR WIPER ARM" .
2. Raise arm cap.
3. Remove the rear wiper motor nut, remove the rear wiper arm and blade.
4. Remove the back door lower finisher. Refer to EI-36, "Removal and Installation" .

5. Disconnect the rear wiper motor connector (B).
6. Remove the bolts (A) and remove the rear wiper motor (1).

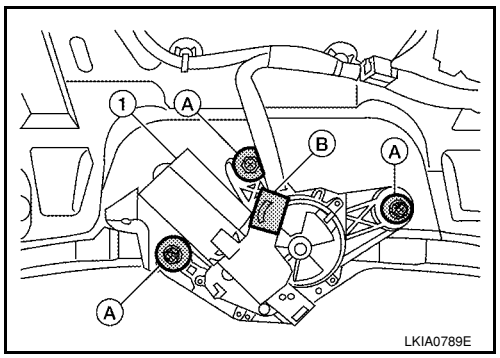

Installation

Installation is in the reverse order of removal.

CAUTION:

Do not drop the wiper motor or cause it to contact other parts.

REAR WASHER TUBE LAYOUT

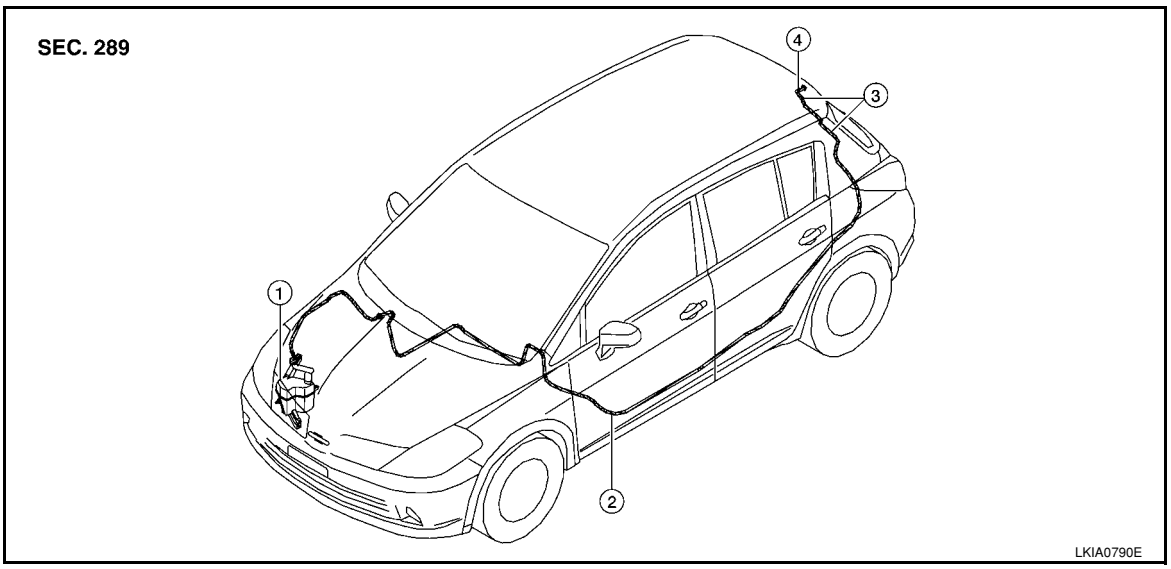

1	Washer fluid reservoir	2	Washer fluid tube to rear door	3	Rear washer nozzle
4	Check valve				

NOTE:

Connect the check valve (2) to the washer fluid tube (1) so that the directional arrow on the check valve (2) points towards the washer nozzle tube (3).

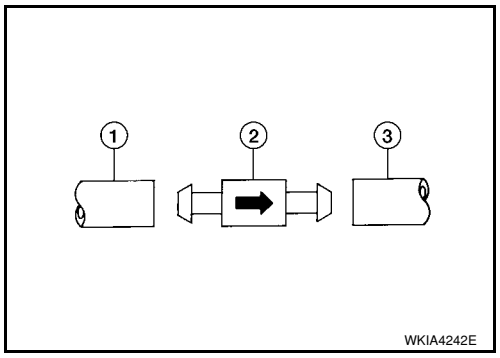

REAR WASHER NOZZLE

Removal

1. Remove the back door window garnish. Refer to EI-36, "Removal and Installation" .
2. Disconnect rear washer tube from rear washer nozzle.

3. Release retaining clips and remove washer nozzle.

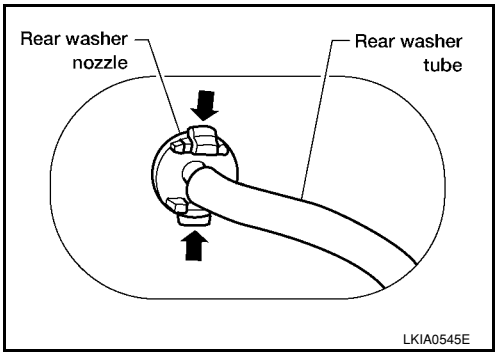

Installation
Installation is in the reverse order of removal.
NOTE:
Inspect rear washer nozzle for proper spray pattern, adjust as necessary. Refer to WW-34, "Washer Nozzle Adjustment" .

WASHER FLUID RESERVOIR
Refer to WW-22, "Removal and Installation of Washer Tank" .

WIPER AND WASHER SWITCH
Refer to WW-22, "Removal and Installation of Front Wiper and Washer Switch" .

WASHER MOTOR
Refer to WW-23, "Removal and Installation of Front Washer Motor" .

Washer Nozzle Adjustment

INFOID:0000000001704578

Adjust the washer nozzle to specification using suitable tool as shown.

Adjustable range : ±15° (In any direction)

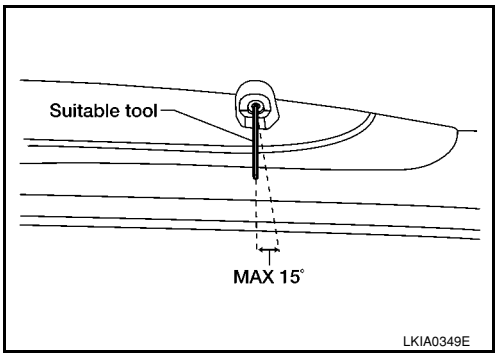

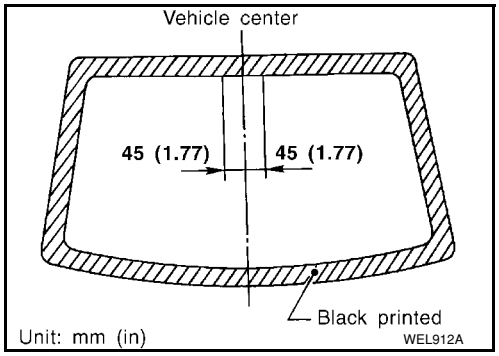

POWER SOCKET

Wiring Diagram - P/SCKT -

INFOID:0000000001704579

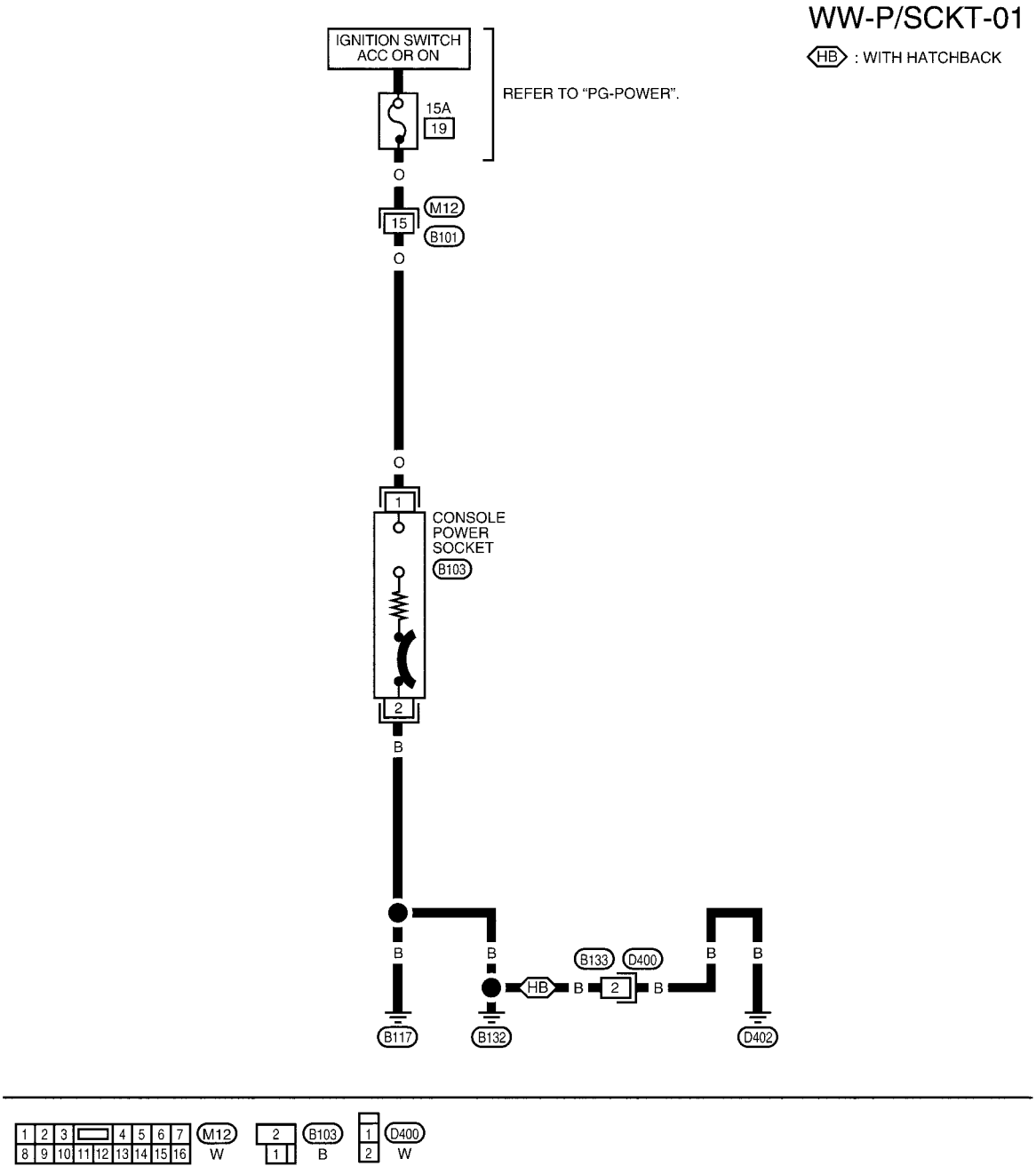

WKWA5835E

Removal and Installation

INFOID:0000000001704580

REMOVAL

1. Remove the console mask. Refer to IP-10, "Component Parts" .

2. Remove the power socket (2) from the power socket ring (3), while pressing the hook (A) on the ring out from square hole (B).
   - Console mask (1)
   - Power socket cutout (C)

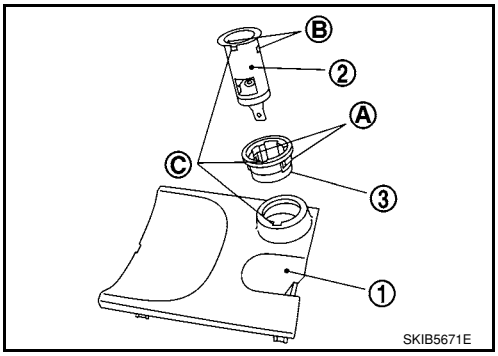

INSTALLATION

Installation is in the reverse order of removal.

NOTE:

Install the power socket with its cutout aligned with the power socket ring.

HORN

Wiring Diagram - HORN -

INFOID:0000000001704581

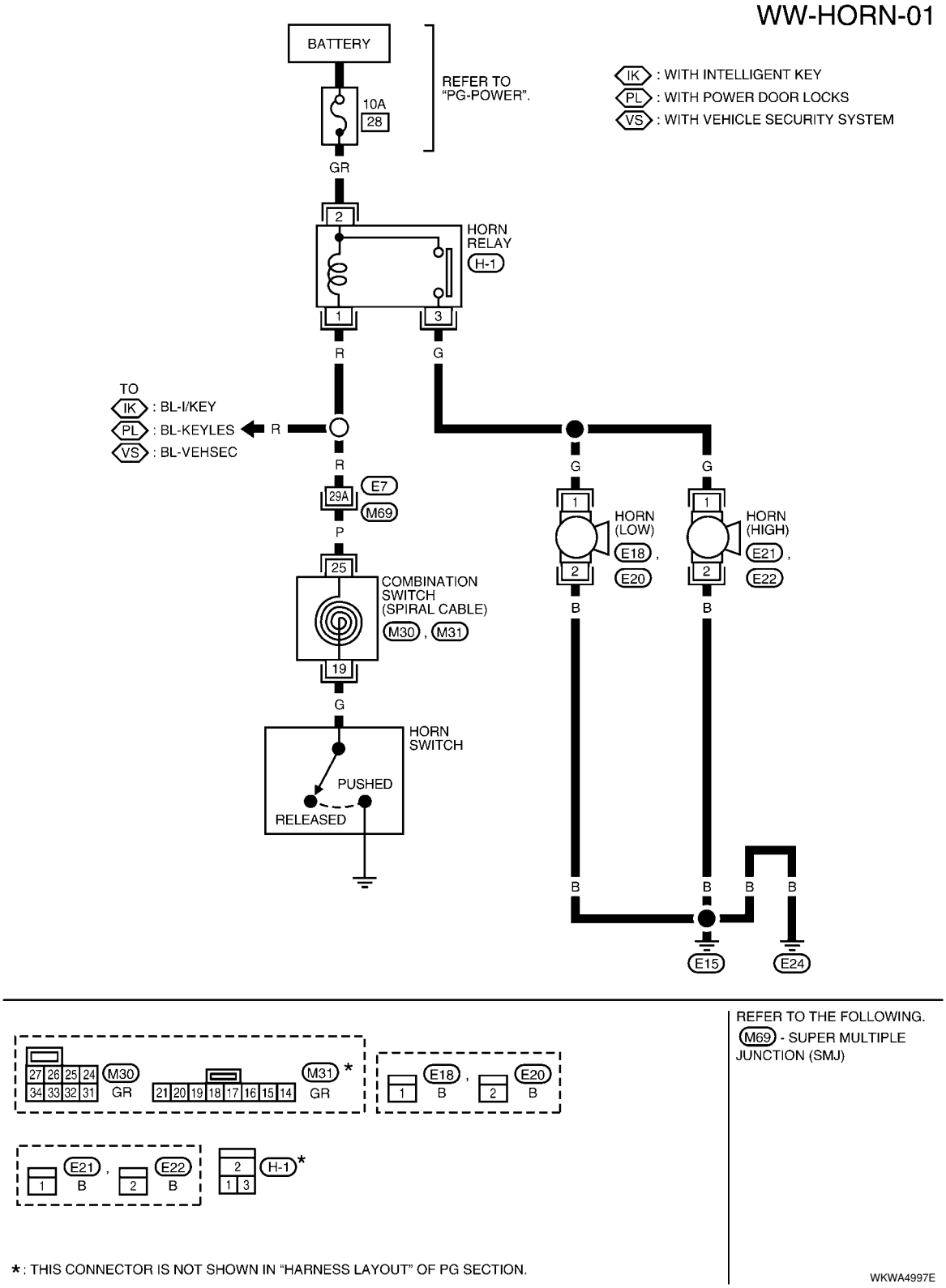

Removal and Installation

INFOID:0000000001704582

REMOVAL

1. Remove the front grille. Refer to EI-20, "Removal and Installation".

2. Disconnect the horn connectors.
3. Remove the horn nuts (A) and remove the horns (1).

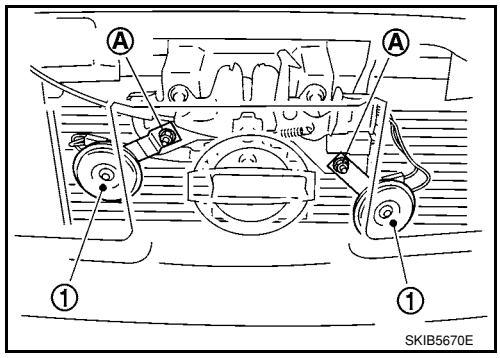

INSTALLATION

Installation is in the reverse order of removal.