Simpo PDF Merge and Split Unregistered Version - http://www.simpopdf.com

A

ABS (anti-lock brake system) BR-38
ABS actuator BR-42
ABS circuit diagram BR-67
ABS component parts and connector locations BR-64
ABS control unit BR-41
ABS hydraulic circuit BR-38
ABS self-diagnosis BR-56
ABS symptom chart BR-57
ABS system components BR-39
ABS trouble diagnoses BR-52
ABS wheel sensors BR-40
ABS wiring diagram BR-45
A/C air flow HA-12
A/C circuit diagram HA-34
A/C component layout HA-11
A/C compressor clutch removal and installation HA-77
A/C compressor mounting HA-75
A/C compressor precaution HA-5
A/C compressor special service tool HA-5
A/C control linkage adjustment HA-64
A/C control operation HA-13
A/C diagnostic work flow HA-15
A/C harness layout HA-31
A/C HFC134a (R134a) system precaution HA-3
A/C HFC134a (R134a) system service procedure HA-66
A/C HFC134a (R134a) system service tools HA-6
A/C HFC134a system service equipment precaution HA-8
A/C lubricant (R134a) HA-68
A/C operational check HA-16
A/C performance chart HA-26
A/C performance test diagnoses HA-24
A/C relay HA-64
A/C service data specification HA-84
A/C switch HA-63
A/C symptom chart HA-18
A/C trouble diagnoses HA-14
A/C wiring diagram HA-38
Accel drum unit (SR engine) EM-84
Air bag RS-8
Air bag disposal RS-19
Air bag module RS-14
Air bag precautions GI-2
Air bag removal and installation RS-12
Air bleeding for brake system BR-5
Air cleaner filter replacement (CD engine) MA-41
Air cleaner filter replacement (GA engine) MA-23
Air cleaner filter replacement (SR engine) MA-33
Air conditioner cut control (CD engine) EC-413
Air conditioner cut control (GA engine) EC-28
Air conditioner cut control (SR engine) EC-236
Air flow meter - See Mass air flow sensor (GA engine) EC-101
Air flow meter - See Mass air flow sensor (SR engine) EC-293
Air spoiler, front - See Front air spoiler BT-28
Air spoiler, rear - See Rear air spoiler BT-28
Alternator EL-55
Angular tightening application EM-3
Antenna EL-237
Anti-freeze coolant mixture ratio MA-16
AT removal and installation AT-39
AT trouble diagnoses AT-17
Audio EL-237
Audio and A/C control removal and installation - See Instrument panel BT-13
Automatic transaxle number GI-38
Automatic transmission fluid replacement MA-47
Auxiliary air control (AAC) (GA engine) EC-150
Auxiliary air control (AAC) (SR engine) EC-335

B

Back door BT-7
Back door opener - See Back door BT-7
Back door trim BT-27
Back door window BT-44
Back-up lamp EL-94
Back-up lamp switch (MT) -See reverse lamp switch MT-6
Ball joint front axle FA-27
Battery EL-25
Baulk ring (MT) (RS5F30A & RS5F31A) MT-11
Baulk ring (MT) (RS5F32) MT-34
Belt inspection (drive belt) (CD engine) MA-38
Belt inspection (drive belt) (GA engine) MA-17
Belt inspection (drive belt) (SR engine) MA-28
Blower motor HA-62
Blower resistor HA-63
Board-on lift GI-40
Body alignment BT-47

Simpo PDF Merge and Split Unregistered Version - http://www.simpopdf.com

Brake booster BR-15
Brake control valve (Proportioning valve) BR-9
Brake fluid change BR-5
Brake fluid level MA-47
Brake fluid level and line check BR-5
Brake hydraulic line BR-7
Brake inspection MA-47
Brake lines and cables inspection MA-47
Brake lining temporary checking MA-49
Brake master cylinder BR-12
Brake pedal BR-11
Bumper, front - See Front bumper BT-5
Bumper, rear - See Rear bumper BT-7

C

Camshaft inspection (CD engine) EM-134
Camshaft inspection (GA engine) EM-34
Camshaft inspection (SR engine) EM-88
Camshaft position sensor (CMPS) (SR engine) EC-289
Camshaft position sensor inspection (GA engine) EC-100
Camshaft position sensor inspection (SR engine) EC-292
Charging system EL-52
Chassis and body maintenance MA-45
Cigarette lighter EL-226
Circuit breaker EL-19
Clearance lamp EL-82
Clock EL-226
Clutch cable CL-5
Clutch cover CL-11
Clutch damper CL-8
Clutch disc CL-11
Clutch fluid level MA-45
Clutch master cylinder CL-6
Clutch operating cylinder CL-7
Clutch pedal CL-5
Clutch pedal free play CL-5
Clutch pedal height CL-5
Clutch release bearing CL-9
Clutch withdrawal lever CL-9
Coil spring (front) FA-25
Coil spring (rear) RA-9
Combination lamp, front, removal and installation BT-5
Combination lamp, rear, removal and installation BT-28
Combination meter EL-127
Combination meter removal and installation - See Instrument panel BT-13
Combination switch EL-62
Compression pressure (CD engine) EM-115
Compression pressure (GA engine) EM-15
Compression pressure (SR engine) EM-62
Compressor clutch removal and installation HA-77
Compressor mounting HA-75
Compressor precaution HA-5
Compressor special service tool HA-5
Connecting rod (SR engine) EM-103
Connecting rod bearing clearance (CD engine) EM-147
Connecting rod bearing clearance (GA engine) EM-53
Connecting rod bearing clearance (SR engine) EM-107
Connecting rod bushing clearance (CD engine) EM-148
Connecting rod bushing clearance (GA engine) EM-54
Connecting rod bushing clearance (SR engine) EM-108
Console box - See Instrument panel BT-13
CONSULT for ABS BR-58
CONSULT for ECCS (GA engine) EC-48
CONSULT for ECCS (SR engine) EC-254
CONSULT general information GI-32
Control lever (MT) MT-9
Control valve (AT) AT-74
Converter housing installation AT-40
Coolant replacement (CD engine) MA-38
Coolant replacement (GA engine) MA-19
Coolant replacement(SR engine) MA-29
Cooling circuit (CD engine) LC-31
Cooling circuit (GA engine) LC-9
Cooling circuit (SR engine) LC-21
Cooling fan control (CD engine) EC-404
Cooling fan control (SR engine) EC-343
Cooling fan motor inspection (CD engine) EC-412
Cooling fan motor inspection (GA engine) EC-167
Cooling fan motor inspection (SR engine) EC-353
Cooling fan relay inspection (CD engine) EC-412
Cooling fan relay inspection (GA engine) EC-167
Cooling fan relay inspection (SR engine) EC-353
Coupling sleeve (MT) (RS5F30A & RS5F31A) MT-11
Coupling sleeve (MT) (RS5F32) MT-34
Crank angle sensor built into distributor - See Camshaft position sensor (GA engine) EC-94
Crank angle sensor built into distributor - See Camshaft position sensor (SR engine) EC-289
Crankcase ventilation system - See positive crankcase ventilation (CD engine) EC-382

Simpo PDF Merge and Split Unregistered Version - http://www.simpopdf.com

Crankcase ventilation system - See positive crankcase ventilation (GA engine) EC-31
Crankcase ventilation system - See positive crankcase ventilation (SR engine) EC-240
Crankshaft assembly (CD engine) EM-152
Crankshaft assembly (GA engine) EM-56
Crankshaft assembly (SR engine) EM-110
Crankshaft bearing clearance (CD engine) EM-146
Crankshaft bearing clearance (GA engine) EM-52
Crankshaft bearing clearance (SR engine) EM-106
Crankshaft inspection (CD engine) EM-149
Crankshaft inspection (GA engine) EM-52
Crankshaft inspection (SR engine) EM-105
Cylinder block (CD engine) EM-143
Cylinder block (GA engine) EM-47
Cylinder block (SR engine) EM-101
Cylinder block boring (SR engine) EM-105
Cylinder head (CD engine) EM-128
Cylinder head (GA engine) EM-32
Cylinder head (SR engine) EM-85
Cylinder head bolt tightening (SR engine) EM-76

D

Daytime light system EL-68
Daytime running light EL-68
Detonation sensor - See Knock sensor (GA engine) EC-119
Detonation sensor - See Knock sensor (SR engine) EC-306
Diagnostic trouble code (DTC) chart (GA engine) EC-62
Diagnostic trouble code (DTC) chart (SR engine) EC-226, 268
Differential gear (FF AT) (Except Model 34 x 81) AT-131
Differential gear (FF AT) (Model 34 x 81) AT-135
Differential gear (FF MT) (RS5F30A & RS5F31A) MT-11
Differential gear (FF MT) (RS5F32) MT-34
Dimensions GI-39
Distributor (GA engine) EC-27
Distributor (SR engine) EC-235
Distributor ignition (DI) system (GA engine) EC-27
Distributor ignition (DI) system (SR engine) EC-235
Door glass BT-11
Door lock BT-11
Door mirror BT-46
Door trim BT-22
Door, front - See Front door BT-11
Door, rear - See Rear door BT-12
Drive plate runout (GA engine) EM-55
Drive plate runout (SR engine) EM-109
Drive shaft (front) FA-12
Dual pressure switch HA-64

E

ECCS basic inspection (GA engine) EC-65
ECCS basic inspection (SR engine) EC-271
ECCS circuit diagram (GA engine) EC-11
ECCS circuit diagram (SR engine) EC-226
ECCS component parts location (GA engine) EC-19
ECCS component parts location (SR engine) EC-228
ECCS fail-safe system (GA engine) EC-64
ECCS fail-safe system (SR engine) EC-270
ECCS on board diagnostic system (GA engine) EC-44
ECCS on board diagnostic system (SR engine) EC-250
ECCS symptom matrix chart (GA engine) EC-71
ECCS symptom matrix chart (SR engine) EC-274
ECCS system diagram and chart (GA engine) EC-15
ECCS system diagram and chart (SR engine) EC-227
ECCS trouble diagnoses (SR engine) EC-264
ECM input/output signal inspection (SR engine) EC-281
EGR control (EGRC) - BPT valve (SR engine) EC-319
EGR valve & EVAP canister purge control solenoid valve inspection (SR engine) EC-323
EGR valve inspection (SR engine) EC-323
EGRC - BPT valve inspection (SR engine) EC-323
Electric sun roof EL-224
Electrical load signal circuit (GA engine) EC-211
Electrical unit ..... Foldout
Electrical units location EL-266
Electronic ignition system (GA engine) EC-27
Electronic ignition system (SR engine) EC-235
Engine compartment BT-47
Engine coolant temperature sensor (ECTS) (CD engine) EC-391
Engine coolant temperature sensor (ECTS) (GA engine) EC-108
Engine coolant temperature sensor (ECTS) (SR engine) EC-297

Simpo PDF Merge and Split Unregistered Version - http://www.simpopdf.com

Engine coolant temperature sensor inspection(CD engine) EC-398
Engine coolant temperature sensor inspection(SR engine) EC-300
Engine oil filter replacement (CD engine) MA-42
Engine oil filter replacement (GA engine) MA-24
Engine oil filter replacement (SR engine) MA-34
Engine oil precautions GI-5
Engine oil replacement (CD engine) MA-41
Engine oil replacement (GA engine) MA-24
Engine oil replacement (SR engine) MA-33
Engine outer component parts (CD engine) EM-113
Engine outer component parts (GA engine) EM-9
Engine outer component parts (SR engine) EM-59
Engine removal (CD engine) EM-140
Engine removal (GA engine) EM-44
Engine removal (SR engine) EM-98
Engine room - See Engine compartment BT-47
Engine serial number GI-38
Engine speed sensor (CD engine) EC-399
Engine speed sensor inspection (CD engine) EC-403
EVAP canister inspection (GA engine) EC-29
EVAP canister inspection (SR engine) EC-238
EVAP canister purge control (GA engine) EC-29
EVAP canister purge control (SR engine) EC-238
EVAP canister purge control solenoid valve (GA engine) EC-179
EVAP vapor lines inspection (GA engine) MA-26
Evaporative emission (EVAP) system (GA engine) EC-29
Evaporative emission (EVAP) system (SR engine) EC-238
Exhaust gas recirculation (EGR) system (SR engine) EC-319
Exhaust gas recirculation (EGR) valve (SR engine) EC-319
Exhaust system FE-5
Exhaust system inspection MA-45
Exterior BT-28
Exterior lamp EL-82

F

Fan switch HA-62
Final drive (FF AT) (Except Model 34 x 81) AT-131
Final drive (FF AT) (Model 34 x 81) AT-135
Final drive (FF MT) (RS5F30A & RS5F31A) MT-11
Final drive (FF MT) (RS5F32) MT-34
Finisher, interior - See Trim BT-16
Finisher, trunk lid - See Trunk lid finisher BT-26
Floor trim BT-16
Fluids MA-14
Flywheel runout (CD engine) EM-154
Flywheel runout (GA engine) EM-55
Flywheel runout (SR engine) EM-109
Fog lamp, front EL-96
Fog lamp, front, removal and installation BT-5
Fog lamp, rear EL-102
Fork rod (MT) (RS5F30A & RS5F31A) MT-12
Fork rod (MT) (RS5F32) MT-35
Forward clutch AT-102
Front air spoiler BT-28
Front axle FA-8
Front bumper BT-5
Front combination lamp removal and installation BT-5
Front disc brake BR-19
Front door BT-11
Front fog lamp EL-96
Front fog lamp removal and installation BT-5
Front passenger air bag RS-16
Front seat BT-35
Front seat belt RS-3
Front strut tower bar BT-28
Front suspension FA-24
Front washer EL-160
Front wiper EL-160
Fuel check valve inspection (GA engine) EC-30
Fuel check valve inspection (SR engine) EC-239
Fuel cut control (at no load & high engine speed)(CD engine) EC-416
Fuel cut control (at no load & high engine speed)(GA engine) EC-28
Fuel cut control (at no load & high engine speed)(SR engine) EC-237
Fuel cut solenoid valve (CD engine) EC-381
Fuel filler lid BT-7
Fuel filter replacement (GA engine) MA-22
Fuel filter replacement (SR engine) MA-32
Fuel gauge EL-129
Fuel line inspection (CD engine) MA-40
Fuel line inspection (GA engine) MA-22
Fuel line inspection (SR engine) MA-32
Fuel precautions GI-6
Fuel pressure check (GA engine) EC-33

Simpo PDF Merge and Split Unregistered Version - http://www.simpopdf.com

Fuel pressure check (SR engine) EC-241
Fuel pressure regulator (GA engine) EC-33
Fuel pressure regulator (SR engine) EC-242
Fuel pressure release (GA engine) EC-33
Fuel pressure release (SR engine) EC-241
Fuel pump (GA engine) EC-145
Fuel pump (SR engine) EC-327
Fuel pump control (GA engine) EC-145
Fuel pump control (SR engine) EC-327
Fuel pump inspection (GA engine) EC-149
Fuel pump inspection (SR engine) EC-331
Fuel pump relay inspection (GA engine) EC-149
Fuel pump relay inspection (SR engine) EC-331
Fuel system FE-3
Fuel tank vacuum relief valve inspection (SR engine) EC-239
Fuel tank vacuum relief valve inspection (GA engine) EC-30
Fuse EL-19
Fuse block ..... Foldout
Fusible link EL-19

G

Garage jack and safety stand GI-41
Gauges EL-127
Gears (MT) (RS5F30A & RS5F31A) MT-11
Gears (MT) (RS5F32) MT-34
Generator EL-55
Glass BT-11
Glow plug (CD engine) EC-397
Glow relay (CD engine) EC-397
Governer valve assembly AT-36
Grease MA-14
Grille - See Exterior BT-28
Ground distribution EL-20

H

Harness connector EL-5
Harness layout EL-269
Hazard warning lamp EL-107
Headlamp EL-65
Headlamp aiming control EL-77
Headlamp leveler EL-77
Headlamp removal and installation BT-5
Headlamp washer EL-177
Headlamp wiper EL-177
Headlining - See Roof trim BT-24
Heated oxygen (HO2S) heater control (SR engine) EC-362
Heated oxygen sensor (HO2S) (GA engine) EC-189
Heated oxygen sensor (HO2S) (SR engine) EC-362
Heated oxygen sensor heater inspection (SR engine) EC-366
Heated oxygen sensor inspection (GA engine) MA-27
Heated oxygen sensor inspection (SR engine) MA-37
Heated seat BT-36, EL-245
Heater wiring diagram HA-36
Height (Dimensions) GI-39
HFC134a (R134a) system precaution HA-3
HFC134a (R134a) system service procedure HA-66
HFC134a (R134a) system service tools HA-6
HFC134a system service equipment precaution HA-8
High clutch AT-97
Hood BT-5
Horn EL-226
How to follow flow chart in trouble diagnoses GI-29
How to perform efficient diagnosis for an electrical incident GI-18
How to read wiring diagrams GI-9
How to use this manual GI-7
Hydraulic lash adjuster inspection (SR engine) EM-93

I

IACV - air regulator inspection (SR engine) EC-334
IACV - FICD solenoid valve inspection (GA engine) EC-209
IACV - FICD solenoid valve inspection (SR engine) EC-342
IACV-AAC valve inspection (GA engine) EC-155
IACV-AAC valve inspection (SR engine) EC-338
IACV-FICD solenoid valve (GA engine) EC-204
IACV-FICD solenoid valve (SR engine) EC-339
Identification plate GI-38
Idle air control valve (IACV) (GA engine) EC-150
Idle air control valve (IACV) - air regulator (SR engine) EC-332
Idle mixture ratio inspection (GA engine) EC-35
Idle mixture ratio inspection (SR engine) EC-243
Idle speed inspection (GA engine) EC-35
Idle speed inspection (SR engine) EC-243

Simpo PDF Merge and Split Unregistered Version - http://www.simpopdf.com

Ignition coil inspection (GA engine) EC-118
Ignition coil inspection (SR engine) EC-305
Ignition timing inspection (GA engine) EC-35
Ignition timing inspection (SR engine) EC-243
Ignition wire inspection (GA engine) MA-26
Ignition wire inspection (SR engine) MA-35
Illumination EL-115
Inhibitor switch AT-30
Injection nozzle (CD engine) EC-376
Injector inspection (GA engine) EC-144
Injector inspection (SR engine) EC-326
Injector removal and installation (GA engine) EC-34
Injector removal and installation (SR engine) EC-242
Input shaft (RS5F30A & RS5F31A) MT-11
Input shaft (RS5F32) MT-34
Instrument panel BT-13
Intake door control linkage adjustment HA-65
Intake door motor HA-65
Interior BT-16
Interior lamp EL-122

J

Jacking points GI-41
Joint connector (J/C) ..... Foldout
Junction box (J/B) ..... Foldout

K

Key-in switch (CD engine) EC-391
Key-in switch inspection (CD engine) EC-398
Knock sensor (KS) (GA engine) EC-119
Knock sensor (KS) (SR engine) EC-306
Knock sensor (KS) inspection (GA engine) EC-123
Knock sensor (KS) inspection (SR engine) EC-308

L

Length (Dimensions) GI-39
License lamp EL-82
Lifting points GI-42
Line pressure test (AT) AT-26
Liquid gasket application EM-3
Location of electrical units EL-266
Lock, door - See Door lock BT-11
Low and reverse brake AT-108
Lubricant (R134a) A/C HA-68
Lubricants MA-14
Lubrication circuit (CD engine) LC-26
Lubrication circuit (GA engine) LC-5
Lubrication circuit (SR engine) LC-17
Lubrication-locks, hinges and hood latches MA-51
Luggage compartment trim BT-16
Luggage room lamp EL-122

M

Magnet clutch HA-77
Main drive gear (MT) (RS5F30A & RS5F31A) MT-11
Main drive gear (MT) (RS5F32) MT-34
Mainshaft (MT) (RS5F30A & RS5F31A) MT-11
Mainshaft (MT) (RS5F32) MT-34
Maintenance (engine) MA-17
Maintenance MA-1
Maintenance general MA-6
Malfunction indicator lamp (MIL) (GA engine) EC-44
Malfunction indicator lamp (MIL) (SR engine) EC-250
Manual steering gear ST-14
Manual transaxle number GI-38
Manual transmission oil replacement MA-46
Mass air flow sensor (MAFS) (GA engine) EC-101
Mass air flow sensor (MAFS) (SR engine) EC-293
Mass air flow sensor inspection (SR engine) EC-296
Master cylinder (brake) BR-12
Master cylinder (clutch) CL-6
Meter and gauges EL-127
MIL & Data link connectors circuit (GA engine) EC-223
MIL & Data link connectors circuit (SR engine) EC-370
Mirror defogger EL-230
Mirror, door - See Door mirror BT-46
Mirror, out side - See Out side mirror BT-46
Mode door control linkage adjustment HA-64
Model variation GI-33
Molding - See Exterior BT-28
MT overhaul MT-10
MT removal and installation MT-7
Mud guard - See Exterior BT-28
Multiport fuel injection (MFI) system (GA engine) EC-24
Multiport fuel injection (MFI) system (SR engine) EC-233
Multiport fuel injection precautions GI-5

IDX

Simpo PDF Merge and Split Unregistered Version - http://www.simpopdf.com

N

NATS (Nissan Anti-Theft System) EL-247
NATS V2.0 precautions (For Europe) GI-3
Neutral position switch (MT) MT-6

O

Oil change (capacity) MA-14
Oil cooler (CD engine) LC-30
Oil pan (engine) (CD engine) EM-118
Oil pan (engine) (GA engine) EM-16
Oil pan (engine) (SR engine) EM-63
Oil pressure (CD engine) LC-27
Oil pressure (GA engine) LC-6
Oil pressure (SR engine) LC-17
Oil pressure relief valve (CD engine) LC-30
Oil pressure relief valve (GA engine) LC-7
Oil pump (AT) AT-70
Oil pump (CD engine) LC-27
Oil pump (GA engine) LC-7
Oil pump (SR engine) LC-18
Oil pump regulator valve (GA engine) LC-7
Oil pump regulator valve (SR engine) LC-20
Oil seal replacement (engine) (CD engine) EM-126
Oil seal replacement (engine) (GA engine) EM-30
Oil seal replacement (engine) (SR engine) EM-82
Operating cylinder (clutch) CL-7
Out side mirror BT-46
Overdrive control switch AT-30
Overrun clutch AT-102
Oversize piston (CD engine) EM-174
Oversize piston (SR engine) EM-104
Oxygen sensor (O2S) (GA engine) EC-194
Oxygen sensor inspection (GA engine) MA-27

P

Park/Neutral position switch (GA engine) EC-173
Park/Neutral position switch (SR engine) EC-357
Parking brake control BR-36
Partial load advance (PLA) control (CD engine) EC-399
PCV (positive crankcase ventilation) inspection (GA engine) EC-31
PCV (positive crankcase ventilation) inspection(SR engine) EC-240
PCV filter replacement (GA engine) MA-26
Periodic maintenance (except for Europe) MA-7
Periodic maintenance (for Europe) MA-10
Pilot bushing replacement (SR engine) ... EM-109
Piston assembly (GA engine) EM-55
Piston assembly (SR engine) EM-109
Piston pin inspection (CD engine) EM-145
Piston pin inspection (GA engine) EM-48
Piston pin inspection (SR engine) EM-102
Piston ring inspection (SR engine) EM-103
Piston to bore clearance (CD engine) EM-151
Piston to bore clearance (GA engine) EM-50
Piston to bore clearance (SR engine) EM-104
Power door lock EL-198
Power door mirror EL-220
Power steering fluid level MA-50, ST-6
Power steering gear ST-19
Power steering hydraulic pressure ST-8
Power steering oil pressure switch (GA engine) EC-169
Power steering oil pressure switch (SR engine) EC-354
Power steering oil pressure switch inspection(GA engine) EC-172
Power steering oil pressure switch inspection(SR engine) EC-356
Power steering oil pump ST-29
Power steering system bleeding ST-7
Power supply routing EL-8
Power transistor & ignition coil (GA engine) EC-113
Power transistor & ignition coil (SR engine) EC-301
Power transistor inspection (GA engine) EC-118
Power transistor inspection (SR engine) EC-305
Power window EL-180
Pre-delivery inspection MA-5
Precautions (General) GI-3
Pressure plate - See Clutch cover CL-11
Pressure test (AT) AT-26
Priming pump (CD engine) EC-381

Q

Quick-glow system (CD engine) EC-390
Quick-glow system check (CD engine) EC-395

R

Radiator (CD engine) LC-35
Radiator (GA engine) LC-16
Radiator (SR engine) LC-25
Radio EL-237

Simpo PDF Merge and Split Unregistered Version - http://www.simpopdf.com

Rear air spoiler BT-28
Rear axle RA-6
Rear bumper BT-7
Rear combination lamp removal and installation BT-28
Rear disc brake BR-29
Rear door BT-12
Rear drum brake BR-25
Rear fog lamp EL-102
Rear seat BT-37
Rear seat belt RS-5
Rear side window BT-45
Rear suspension RA-8
Rear washer EL-169
Rear window BT-43
Rear window defogger EL-230
Rear wiper EL-169
Refrigerant connection precaution HA-4
Refrigerant general precaution HA-3
Refrigerant lines HA-70
Refrigeration cycle HA-10
Release bearing (clutch) CL-9
Resistor inspection (GA engine) EC-118
Resistor inspection (SR engine) EC-305
Reverse clutch AT-93
Reverse gear (MT) (RS5F30A & RS5F31A) MT-11
Reverse gear (MT) (RS5F32) MT-34
Reverse idler shaft (MT) (RS5F30A & RS5F31A) MT-10
Reverse idler shaft (MT) (RS5F32) MT-33
Reverse lamp switch (MT) MT-6
Road wheel size GI-39
Roof trim BT-24
Room lamp EL-122

S

SAE J1930 terminology list GI-45
Seal - See Exterior BT-28
Seat belt inspection MA-51
Seat belt pre-tensioner RS-8
Seat belt pre-tensioner disposal RS-19
Seat belt pretensioner removal and installation RS-13
Seat belt, front - See Front seat belt RS-3
Seat belt, rear - See Rear seat belt RS-5
Seat, front - See Front seat BT-35
Seat, rear - See Rear seat BT-37
Shift control (MT) (RS5F30A & RS5F31A) MT-12
Shift control (MT) (RS5F32) MT-35
Shift fork (MT) (RS5F30A & RS5F31A) MT-12
Shift fork (MT) (RS5F32) MT-35
Shift schedule AT-19
Shock absorber (front) FA-25
Shock absorber (rear) RA-9
Side trim BT-16
Side window - See Rear side window BT-45
SMJ (super multiple junction) ..... Foldout
Solenoid timer (CD engine) EC-399
Solenoid timer inspection (CD engine) EC-403
Spark plug replacement (GA engine) MA-25
Spark plug replacement (SR engine) MA-34
Speedometer EL-129
Spiral cable RS-14
Spot lamp EL-122
SRS - See Supplemental Restraint System RS-8
SRS Trouble diagnoses RS-28
SRS Wiring diagram RS-29
Stabilizer bar (front) FA-26
Stall test (AT) AT-24
Standardized relay EL-6
Starter EL-36
Starting system EL-33
Steering gear and linkage inspection MA-50
Steering knuckle FA-8
Steering linkage ST-14, 19
Steering wheel and column ST-9
Steering wheel play ST-5
Steering wheel turning force ST-7
Stop lamp EL-92
Striking rod (MT) (RS5F30A & RS5F31A) MT-12
Striking rod (MT) (RS5F32) MT-35
Strut (front) FA-25
Sun roof, electric EL-224
Sunroof BT-39
Supplemental Restraint System RS-8
Symbols and abbreviations GI-8
Synchronizer (MT) (RS5F30A & RS5F31A) MT-11
Synchronizer (MT) (RS5F32) MT-34

T

Tachometer EL-129
Tail lamp EL-82
Temperature control cable and linkage adjustment HA-65
Thermal protector HA-63
Thermo control amp HA-63
Thermostat (CD engine) LC-34
Thermostat (GA engine) LC-14
Thermostat (SR engine) LC-23
Three way catalyst precautions GI-5
Throttle position sensor (TPS) (GA engine) EC-128
Throttle position sensor (TPS) (SR engine) EC-309
Throttle position sensor adjustment (GA engine) EC-65

Simpo PDF Merge and Split Unregistered Version - http://www.simpopdf.com

Throttle position sensor adjustment (SR engine) EC-271
Throttle position sensor inspection (GA engine) EC-65, 132
Throttle position sensor inspection (SR engine) EC-271, 313
Throwout bearing - See Clutch release bearing CL-9
Tie-rod ball joints ST-23
Tightening torque of standard bolts GI-44
Timing belt (CD engine) EM-120
Timing chain (GA engine) EM-18
Timing chain (SR engine) EM-68
Tire rotation MA-50
Tire size GI-39
Torque converter clutch solenoid valve AT-30
Torque converter installation AT-40
Tow truck towing GI-43
Towing point GI-43
Transmission case (MT) (RS5F30A & RS5F31A) MT-10
Transmission case (MT) (RS5F32) MT-33
Transverse link (front) FA-27
Tread-FR&RR (Dimensions) GI-39
Trim BT-16
Trunk lid BT-7
Trunk lid finisher BT-26
Trunk lid opener - See Trunk lid BT-7
Trunk lid trim BT-26
Trunk room lamp EL-122
Trunk room trim BT-26
Turn signal lamp EL-107

U

Under body BT-49

V

Vacuum hose (brake system) BR-17
Vacuum hose drawing (ECCS) (SR engine) EC-231
Valve clearance (GA engine) EM-41
Valve guide inspection (CD engine) EM-130
Valve guide inspection (GA engine) EM-36
Valve guide inspection (SR engine) EM-90
Valve seat inspection (CD engine) EM-131
Valve seat inspection (GA engine) EM-38
Valve seat inspection (SR engine) EM-91
Valve spring inspection (CD engine) EM-133
Valve spring inspection (GA engine) EM-39
Valve spring inspection (SR engine) EM-92
Valve timing control (VTC) (GA engine) EC-198
VE-type injection pump (CD engine) EC-372
Vehicle identification number GI-36
Vehicle speed sensor (VSS) (GA engine) EC-133
Vehicle speed sensor (VSS) (SR engine) EC-314
Viscosity number (SAE) MA-15

W

Warning buzzer EL-152
Warning lamps EL-138
Washer, front EL-160
Washer, rear EL-169
Water cock control rod adjustment HA-64
Water pump (CD engine) LC-33
Water pump (GA engine) LC-13
Water pump (SR engine) LC-22
Water temperature gauge EL-129
Weatherstrip - See Exterior BT-28
Wheel alignment (front) FA-6
Wheel alignment (rear) RA-5
Wheel balance MA-49
Wheel bearing (front axle) FA-5
Wheel bearing (rear) RA-4
Wheel hub (front) FA-8
Wheel hub (rear) RA-6
Wheel hub and steering knuckle FA-8
Wheel sensors (ABS) BR-40
Wheel size GI-39
Wheelbase (Dimensions) GI-39
Wide open & closed throttle position (CTP) switch(GA engine) EC-128
Wide open & closed throttle position (CTP) switch(SR engine) EC-309
Width (Dimensions) GI-39
Window, back door - See Back door window BT-44
Window, door BT-11
Window, rear - See Rear window BT-43
Window, rear side - See Rear side window BT-45
Window, side - See Rear side window BT-45
Windshield BT-43
Windshield washer EL-160
Windshield wiper EL-160
Wiper and washer EL-160
Wiper, front EL-160
Wiper, rear EL-169
Withdrawal lever (clutch) CL-9
Wrist pin - See Piston pin inspection (SR engine) EM-102

Simpo PDF Merge and Split Unregistered Version - http://www.simpopdf.com

ENGINE LUBRICATION & COOLING SYSTEMS

SECTION LC

CONTENTS

PRECAUTION 2
PREPARATION 3

GA

ENGINE LUBRICATION SYSTEM 5
Lubrication Circuit 5
Oil Pressure Check 6
Oil Pump 7
ENGINE COOLING SYSTEM 9
Cooling Circuit 9
Water Hose Drawing 10
System Check 12
Water Pump 13
Thermostat 14
Water Outlet 15
Radiator 16

SR

ENGINE LUBRICATION SYSTEM 17
Lubrication Circuit 17
Oil Pressure Check 17
Oil Pump 18
Oil Filter 20
ENGINE COOLING SYSTEM 21
Cooling Circuit 21
System Check 21
Cooling System Inspection 21
Water Pump 22
Thermostat 23
Water Outlet 24
Radiator 25

CD

ENGINE LUBRICATION SYSTEM 26
Lubrication Circuit 26
Oil Pressure Check 27
Oil Pump 27
Oil Cooler 30
ENGINE COOLING SYSTEM 31
Cooling Circuit 31
System Check 32
Water Pump 33
Thermostat 34
Radiator 35

GA, SR, CD

ENGINE COOLING SYSTEM 37
Radiator (Aluminum type) 37

GA, SR

SERVICE DATA AND SPECIFICATIONS (SDS) 40
Engine Lubrication System (GA) 40
Engine Cooling System (GA) 40
Engine Lubrication System (SR) 40
Engine Cooling System (SR) 40

CD

SERVICE DATA AND SPECIFICATIONS (SDS) 41
Engine Lubrication System 41
Engine Cooling System 41

Simpo PDF Merge and Split Unregistered Version - http://www.simpopdf.com

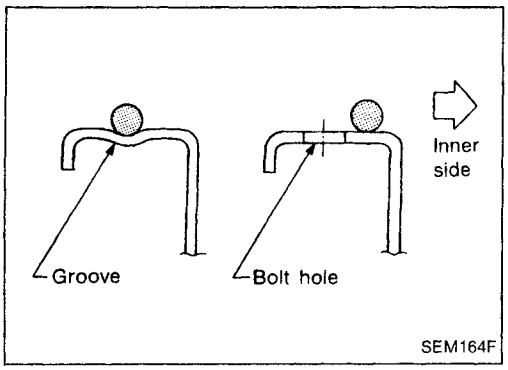

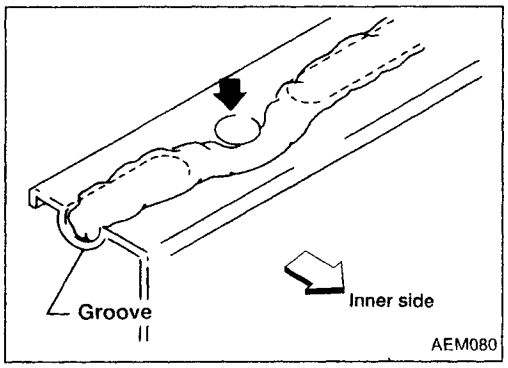

LIQUID GASKET APPLICATION PROCEDURE

a. Use a scraper to remove all traces of old liquid gasket from mating surfaces and grooves. Also, completely clean any oil from these areas.
b. Apply a continuous bead of liquid gasket to mating surfaces. (Use Genuine Liquid Gasket or equivalent.)
   - For oil pan, be sure liquid gasket diameter is 4.0 to 5.0 mm (0.157 to 0.197 in) for SR engine and 3.5 to 4.5 mm (0.138 to 0.177 in) except for SR engine.
   - For areas except oil pan, be sure liquid gasket diameter is 2.0 to 3.0 mm (0.079 to 0.118 in).
c. Apply liquid gasket to inner sealing surface around hole perimeter area.
   (Assembly should be done within 5 minutes after coating.)
d. Wait at least 30 minutes before refilling engine oil and engine coolant.

Simpo PDF Merge and Split Unregistered Version - http://www.simpopdf.com

SPECIAL SERVICE TOOLS

The actual shapes of Kent-Moore tools may differ from those of special service tools illustrated here.

Tool number Tool name	Description		Engine application		
			GA	SR	CD
ST25051001* Oil pressure gauge	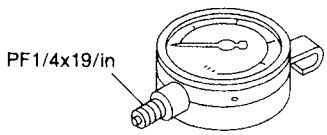 NT558	Measuring oil pressure **Maximum measuring range: 2,452 kPa (24.5 bar, 25 kg/cm², 356 psi)**	X	X	X
ST25052000* Hose	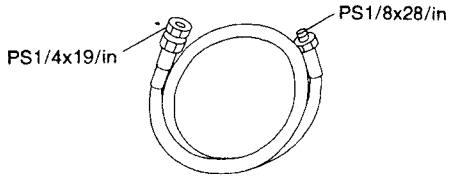 NT559	Adapting oil pressure gauge to cylinder block	X	X	X
KV10115801 KV10115800 (Kent-Moore Europe make) Oil filter wrench	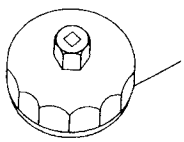 14 faces, Inner span: 64.3 mm (2.531 in) (Face to opposite face) NT362	Removing oil filter	—	X	—
KV10105900 Oil filter wrench	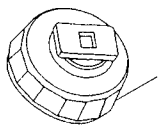 15 faces, Inner span: 80 mm (3.15 in) (Face to opposite corner) 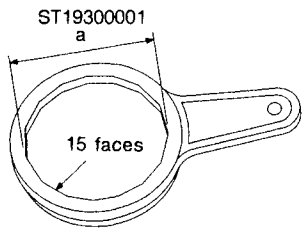 NT638	Removing oil filter **a: 78 mm (3.07 in) (Face to opposite corner)**	X	—	X
WS39930000 Tube presser	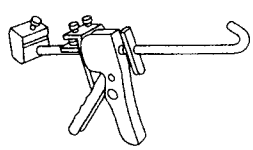 NT052	Pressing the tube of liquid gasket	X	X	X

*: Special tool or commercial equivalent

LC

Simpo PDF Merge and Split Unregistered Version - http://www.simpopdf.com

Tool number Tool name	Description		Engine application		
			GA	SR	CD
EG17650301 Radiator cap tester adapter	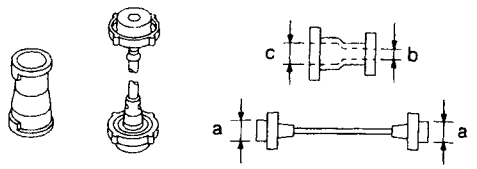 NT564	Adapting radiator cap tester to radiator filler neck **a: 28 (1.10) dia.** **b: 31.4 (1.236) dia.** **c: 41.3 (1.626) dia.** Unit: mm (in)	X	X	X
KV99103510 Radiator plate pliers A	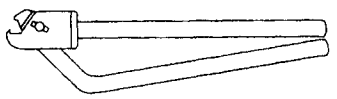 NT224	Installing radiator upper and lower tanks	X	X	X
KV99103520 Radiator plate pliers B	 NT225	Removing radiator upper and lower tanks	X	X	X

Simpo PDF Merge and Split Unregistered Version - http://www.simpopdf.com

Lubrication Circuit

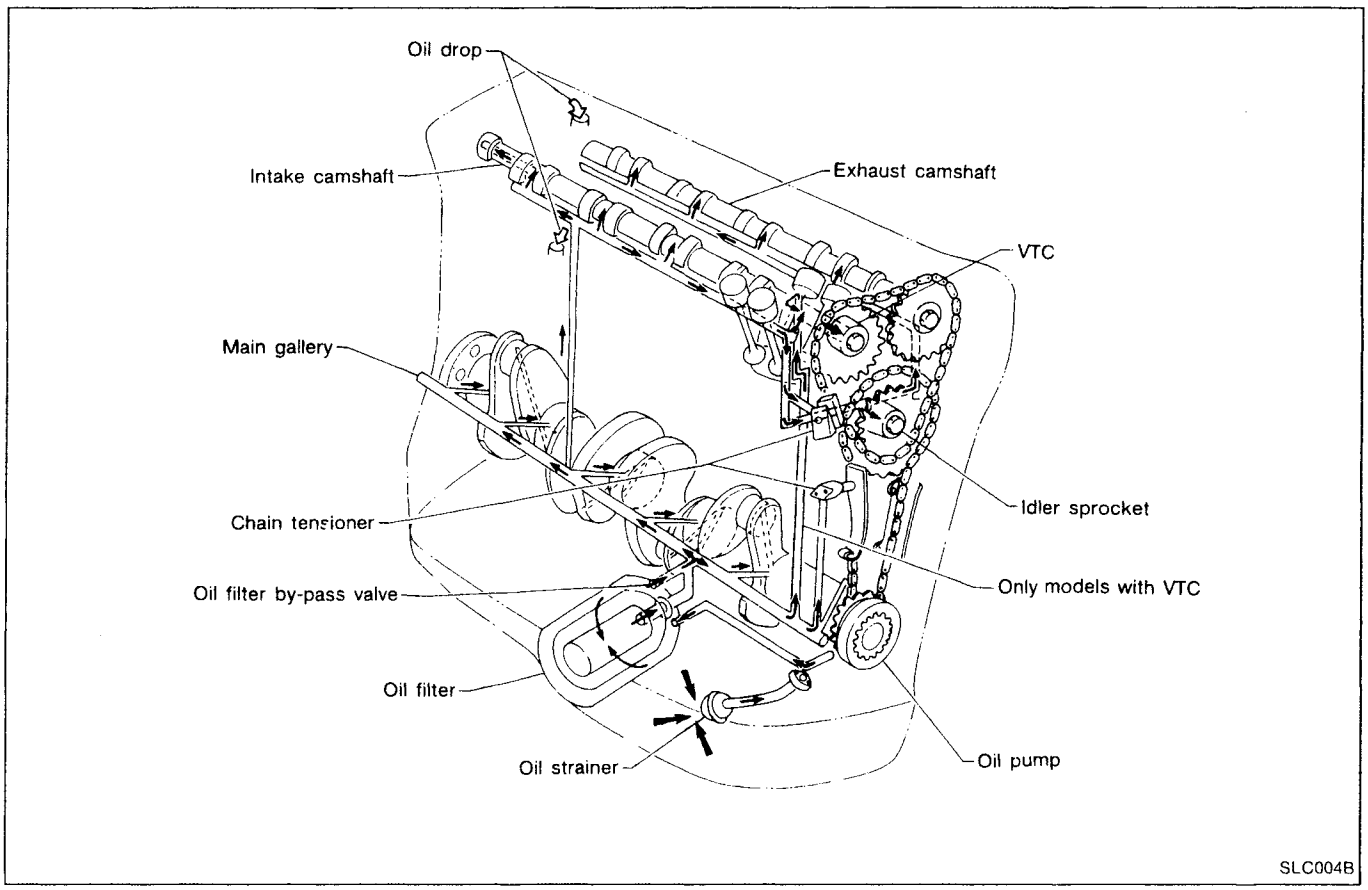

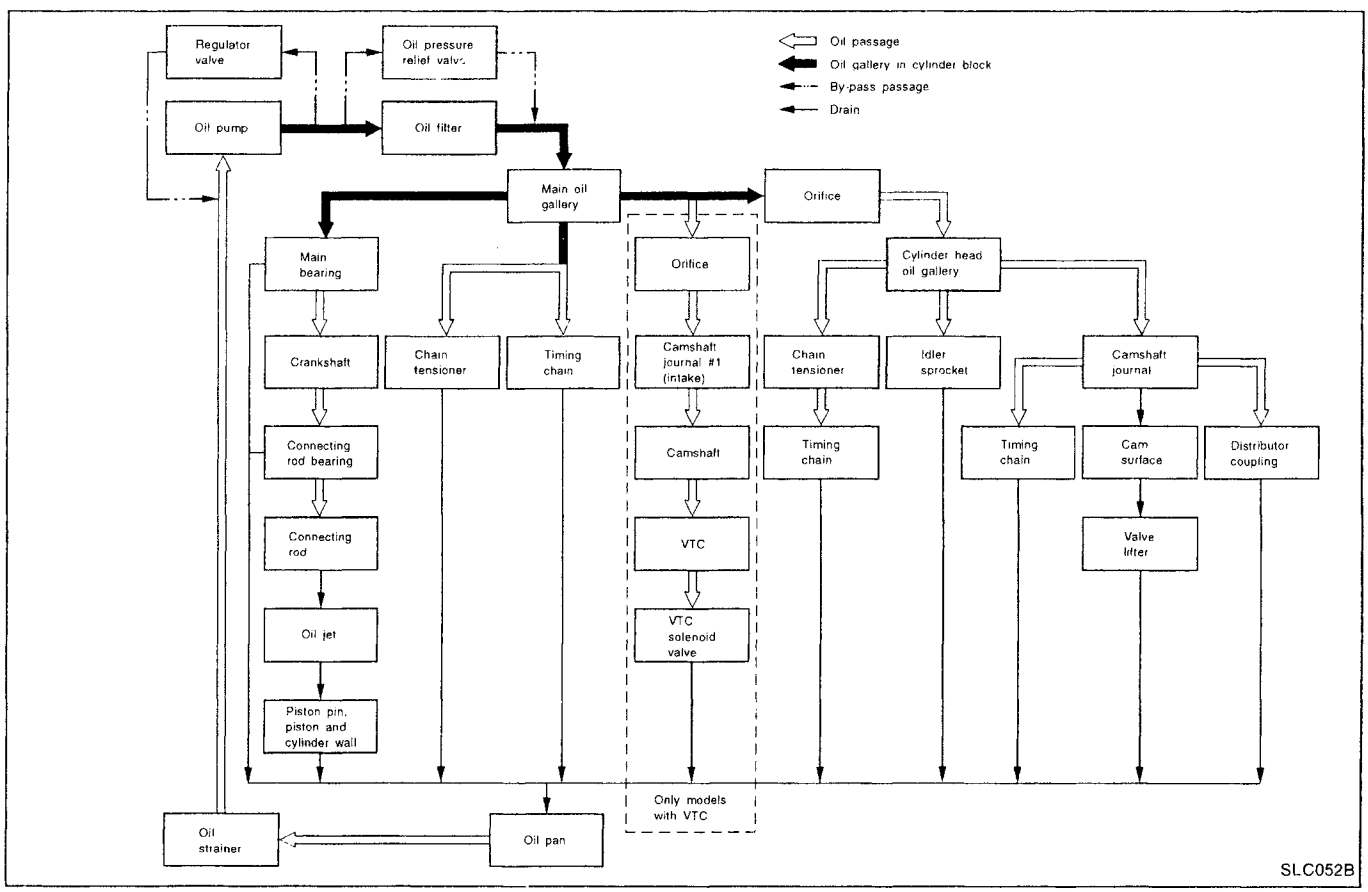

Simpo PDF Merge and Split Unregistered Version - http://www.simpopdf.com

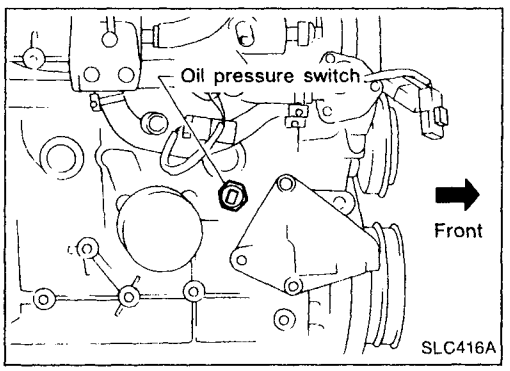

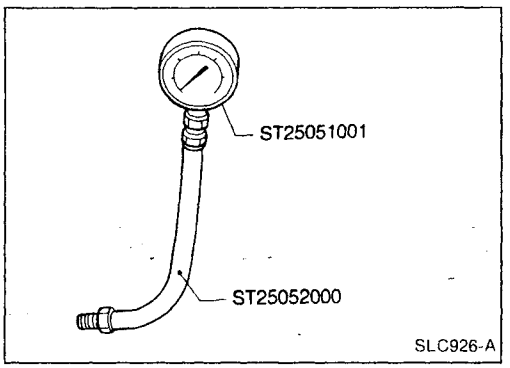

Oil Pressure Check

WARNING:

- **Be careful not to burn yourself, as the engine and oil may be hot.**
- **Oil pressure check should be done in "Neutral" gear position.**

1. Check oil level.
2. Remove oil pressure switch.

Engine speed rpm	Approximate discharge pressure kPa (bar, kg/cm^2, psi)
Idle speed	More than 59 (0.59, 0.6, 9)
2,000	More than 245 (2.45, 2.5, 36)
6,000	More than 422 (4.22, 4.3, 61)

3. Install pressure gauge.
4. Start engine and warm it up to normal operating temperature.
5. Check oil pressure with engine running under no-load.

If difference is extreme, check oil passage and oil pump for oil leaks.

6. Install oil pressure switch with sealant.

Simpo PDF Merge and Split Unregistered Version - http://www.simpopdf.com

Oil Pump

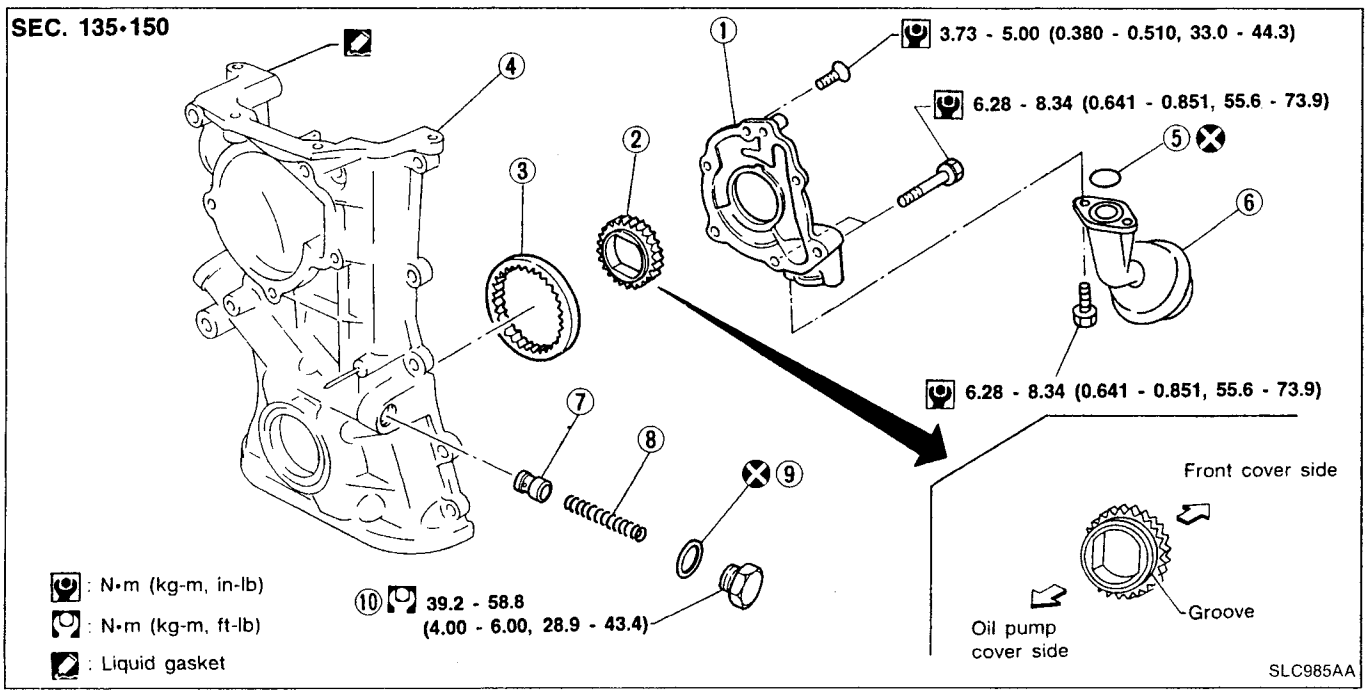

① Oil pump cover
② Inner gear
③ Outer gear
④ Front cover
⑤ O-ring
⑥ Oil strainer
⑦ Regulator valve
⑧ Spring
⑨ Washer
⑩ Plug

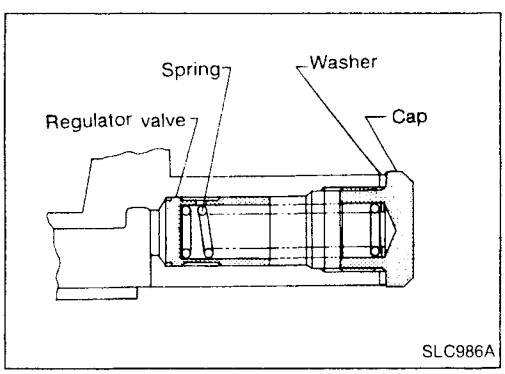

REGULATOR VALVE INSPECTION

1. Visually inspect components for wear and damage.
2. Check oil pressure regulator valve sliding surface and valve spring.
3. Coat regulator valve with engine oil. Check that it falls freely into the valve hole by its own weight.

If damaged, replace regulator valve set or oil pump assembly.

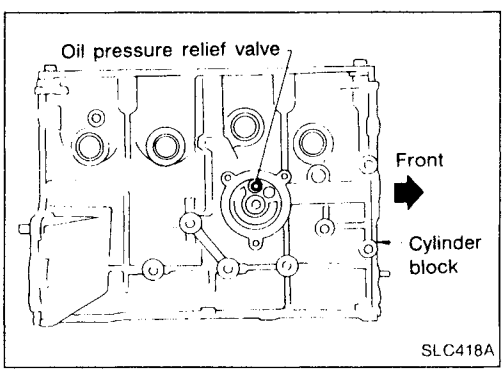

OIL PRESSURE RELIEF VALVE INSPECTION

Inspect oil pressure relief valve for movement, cracks and breaks by pushing the ball. If replacement is necessary, remove valve by prying it out with suitable tool.
Install a new valve in place by tapping it.

Simpo PDF Merge and Split Unregistered Version - http://www.simpopdf.com

Oil Pump (Cont'd)

DISASSEMBLY AND ASSEMBLY

- **Always replace oil seal with a new one.**
- **When installing oil pump, apply engine oil to gears.**
- **Make sure that O-ring is fitted properly.**

OIL PUMP INSPECTION

Using a feeler gauge, check the following clearance.

Unit: mm (in)

Body to outer gear clearance ①	0.110 - 0.200 (0.0043 - 0.0079)
Inner gear to crescent clearance ②	0.217 - 0.327 (0.0085 - 0.0129)
Outer gear to crescent clearance ③	0.21 - 0.32 (0.0083 - 0.0126)
Body to inner gear clearance ④	0.05 - 0.09 (0.0020 - 0.0035)
Body to outer gear clearance ⑤	0.05 - 0.11 (0.0020 - 0.0043)
Inner gear to brazed portion of housing clearance ⑥	0.045 - 0.091 (0.0018 - 0.0036)

- **If the tip clearance (②) exceeds the limit, replace gear set.**
- **If body to gear clearances (①, ③, ④, ⑤, ⑥) exceed the limit, replace front cover assembly.**

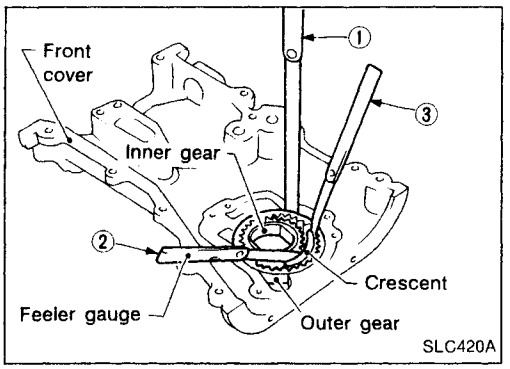

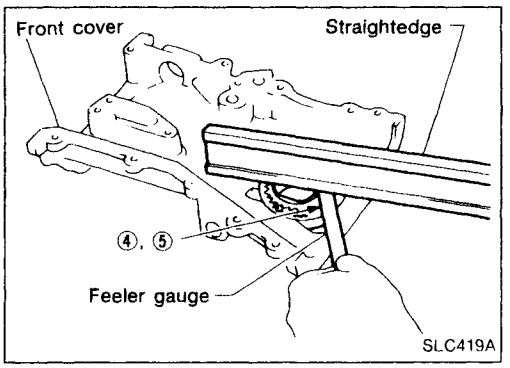

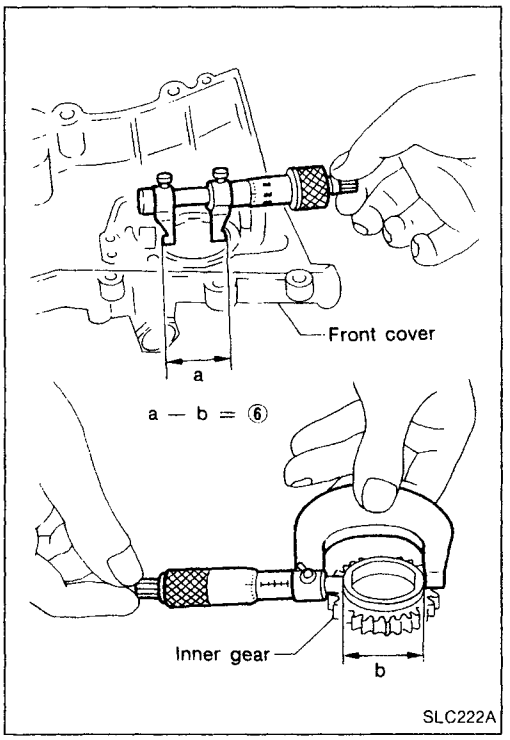

Simpo PDF Merge and Split Unregistered Version - http://www.simpopdf.com

Cooling Circuit

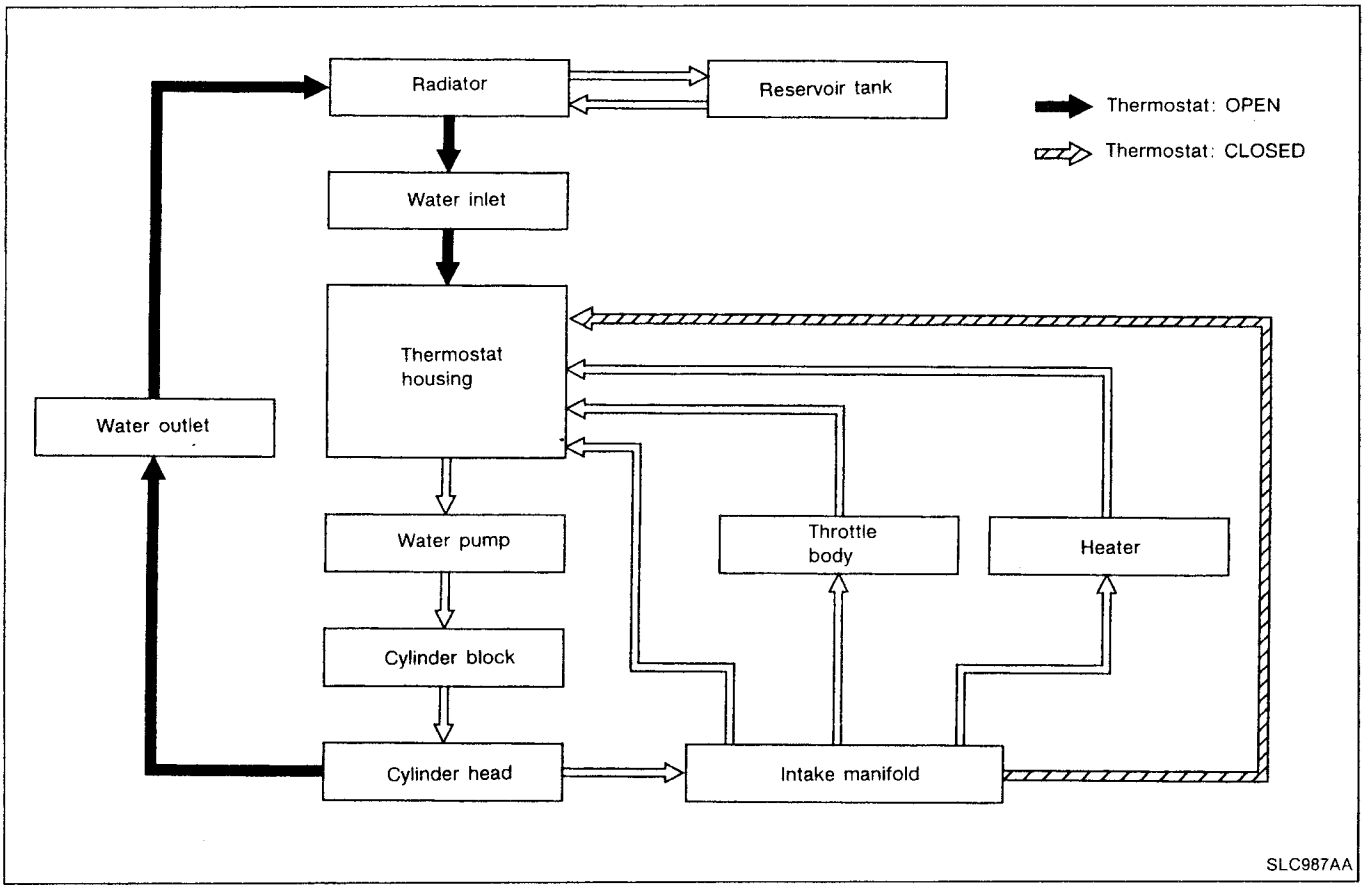

Simpo PDF Merge and Split Unregistered Version - http://www.simpopdf.com

Water Hose Drawing

GA14DE and GA16DE without VTC

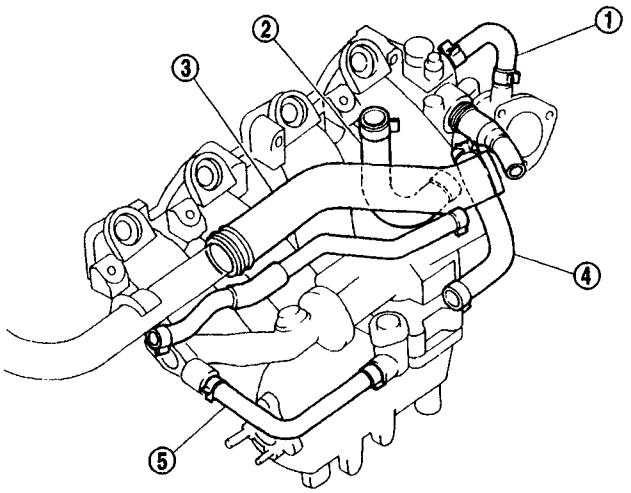

GA15DE

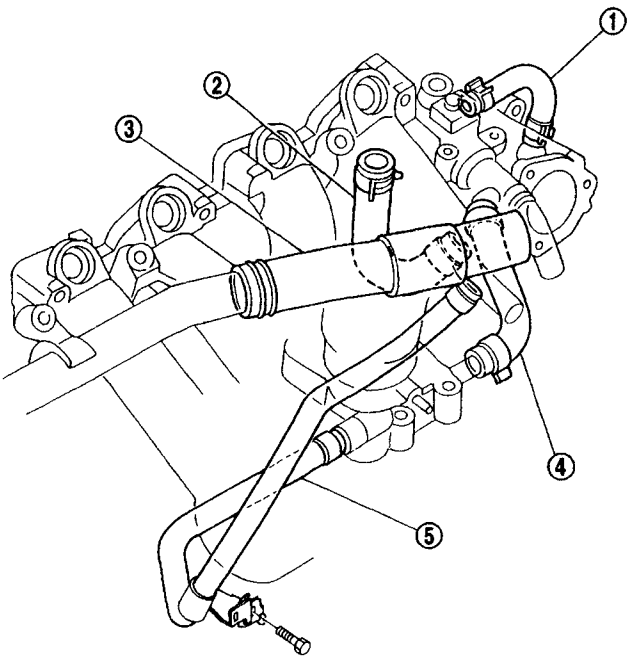

GA16DE with VTC except for Australia

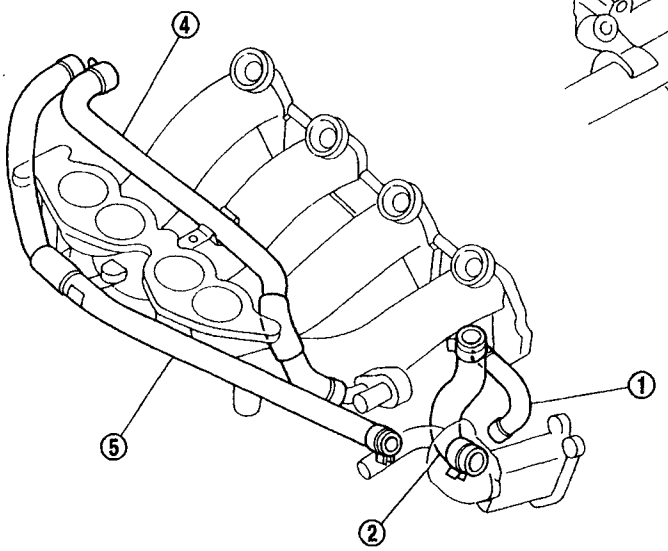

MLC084A

① Intake manifold to thermostat housing-1
② Intake manifold to thermostat housing-2
③ Radiator lower hose to water inlet
④ Intake manifold to throttle body
⑤ Throttle body to thermostat housing

Simpo PDF Merge and Split Unregistered Version - http://www.simpopdf.com

Water Hose Drawing (Cont'd)

GA16DE with VTC for Australia

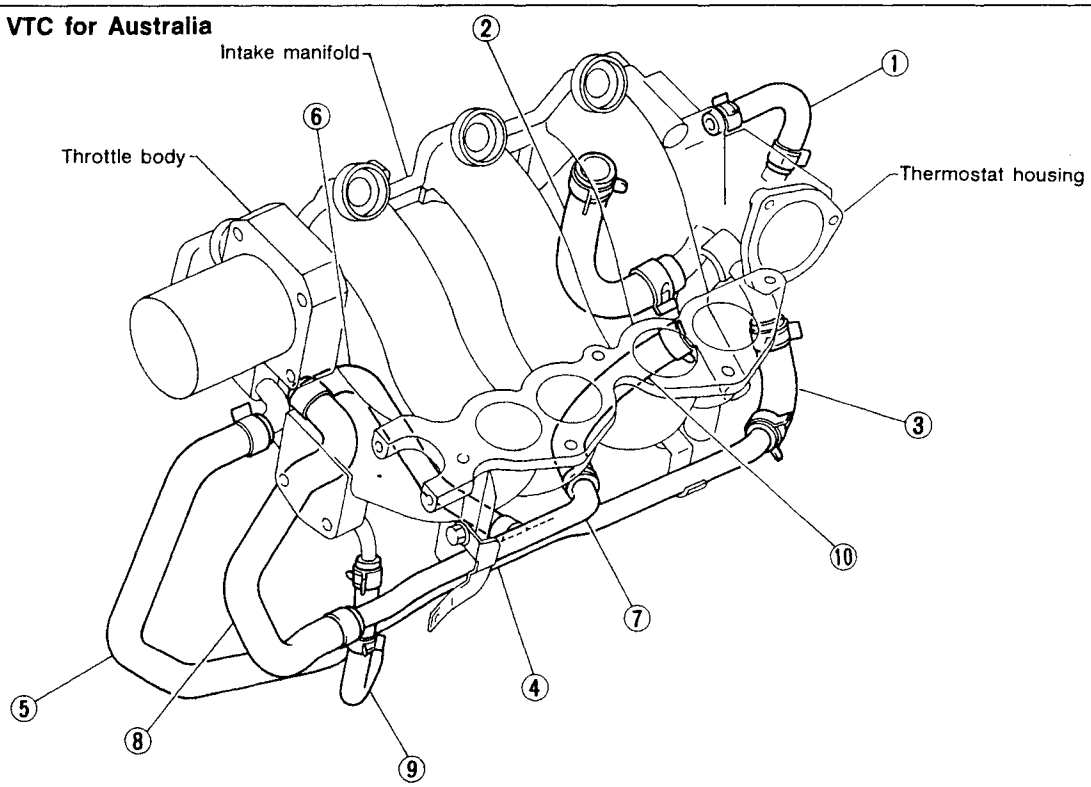

① Intake manifold to Thermostat housing (upper)
② Intake manifold to Thermostat housing (lower)
③ Water jacket to Water pipe lower
④ Water pipe lower
⑤ Water pipe lower to Throttle body
⑥ Water pipe lower to Intake manifold
⑦ Water pipe upper
⑧ Throttle body to Water pipe upper
⑨ Intake manifold to Water pipe upper
⑩ Water pipe upper to Thermostat housing

SLC021BA

Simpo PDF Merge and Split Unregistered Version - https://www.simpopdf.com

System Check

WARNING:
Never remove the radiator cap when the engine is hot; serious burns could be caused by high pressure fluid escaping from the radiator.
Wrap a thick cloth around cap and carefully loosen it a quarter turn to release built-up pressure. Then remove the cap completely.

CHECKING COOLING SYSTEM HOSES

Check hoses for improper attachment, leaks, cracks, damage, loose connections, chafing and deterioration.

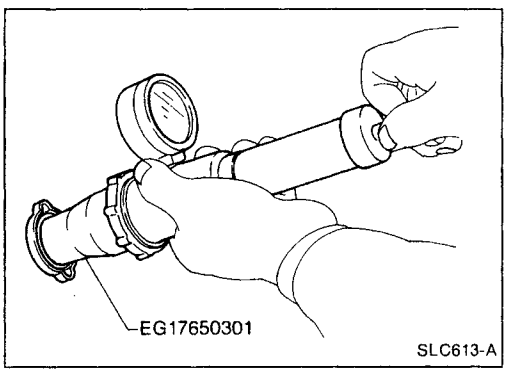

CHECKING RADIATOR CAP

To check radiator cap, apply pressure to cap with a tester.

Radiator cap relief pressure:
Standard
78 - 98 kPa
(0.78 - 0.98 bar, 0.8 - 1.0 kg/cm^2, 11 - 14 psi)
Limit
59 - 98 kPa
(0.59 - 0.98 bar, 0.6 - 1.0 kg/cm^2, 9 - 14 psi)

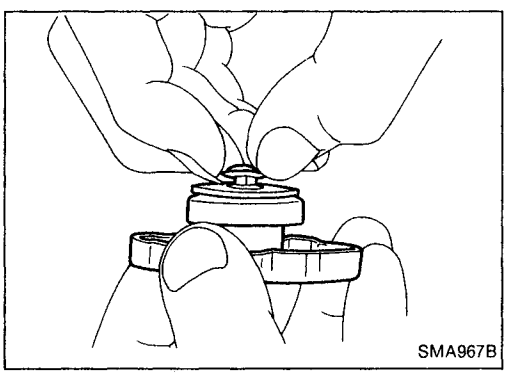

Pull the negative pressure valve to open it. Check that it closes completely when released.

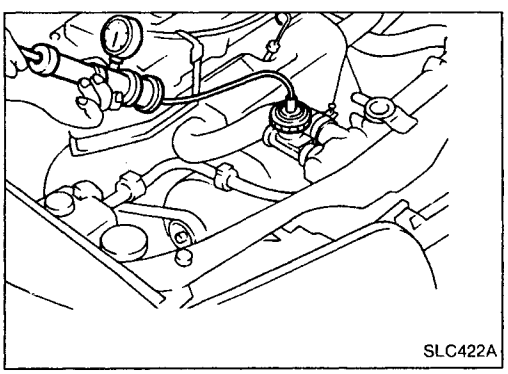

CHECKING COOLING SYSTEM FOR LEAKS

To check for leakage, apply pressure to the cooling system with a tester.

Testing pressure:
157 kPa (1.57 bar, 1.6 kg/cm^2, 23 psi)

CAUTION:
Higher than the specified pressure may cause radiator damage.

Simpo PDF Merge and Split Unregistered Version - http://www.simpopdf.com

Water Pump

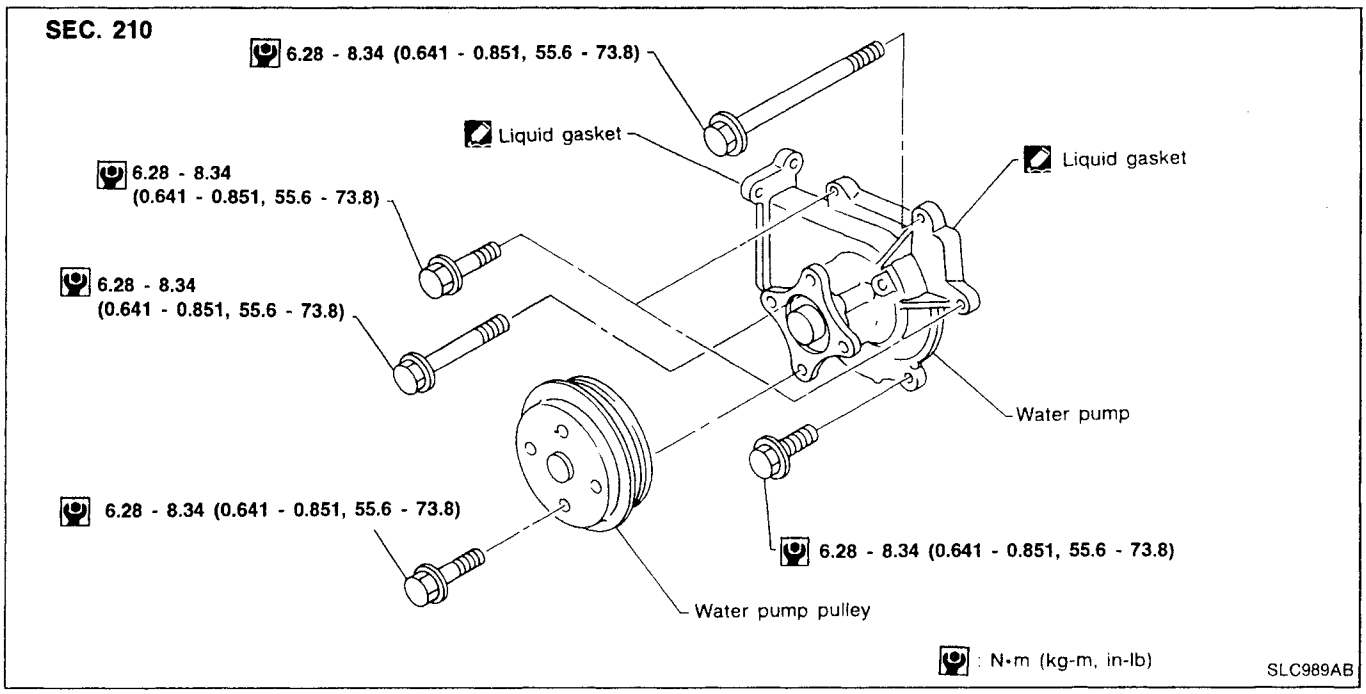

CAUTION:

- **When removing water pump assembly, be careful not to get coolant on timing chain.**
- **Water pump cannot be disassembled and should be replaced as a unit.**
- **After installing water pump, connect hose and clamp securely, then check for leaks using radiator cap tester.**

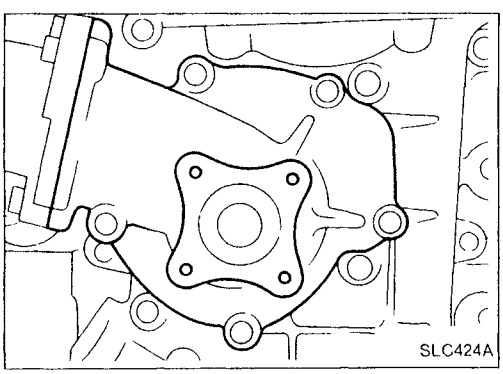

REMOVAL

1. Drain coolant from radiator and cylinder block.
2. Remove drive belts for compressor, power steering pump and alternator.
3. Remove water pump pulley.
4. Remove water pump.

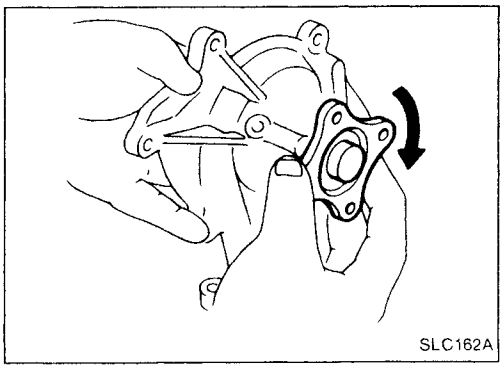

INSPECTION

1. Check body assembly for rust or corrosion.
2. Check for rough operation due to excessive end play.

Simpo PDF Merge and Split Unregistered Version - http://www.simpopdf.com

Water Pump (Cont'd)

INSTALLATION

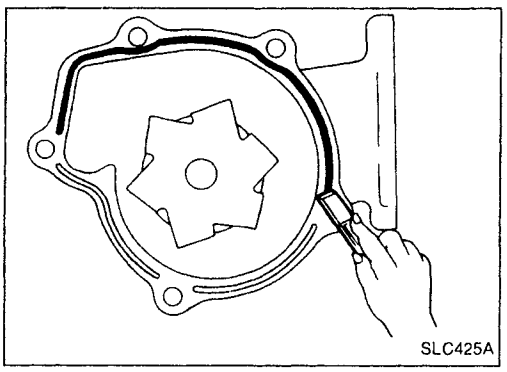
SLC425A

Use a scraper to remove liquid gasket from water pump.
Be sure liquid gasket in grooves is also removed.

- Remove liquid gasket from mating surface of front cover.
- Remove all traces of liquid gasket using white gasoline.

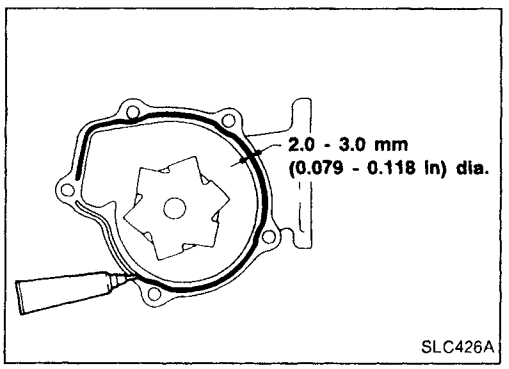

SLC426A

- Apply liquid gasket to mating surface of pump housing as shown.

Thermostat

INSPECTION

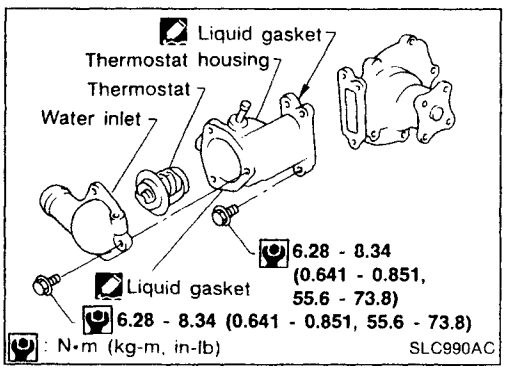

SLC990AC

1. Check for valve seating condition at ordinary temperatures. It should seat tightly.

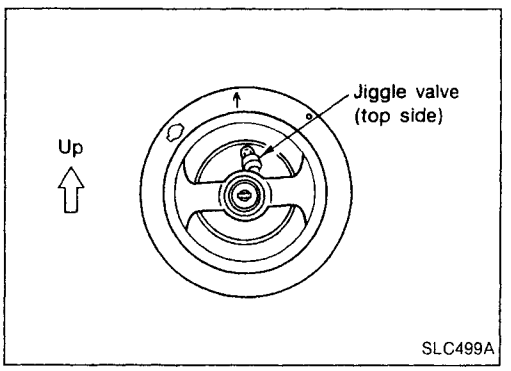

SLC499A

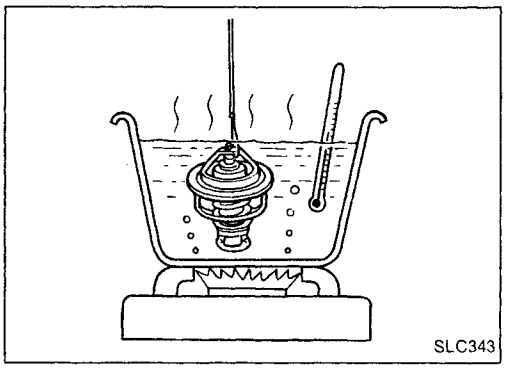
SLC343

2. Check valve opening temperature and maximum valve lift.

Valve opening temperature	°C (°F)	76.5 (170)
Valve lift	mm/°C (in/°F)	More than 8/90 (0.31/194)

3. Then check if valve closes at 5°C (9°F) below valve opening temperature.

- **After installation, run engine for a few minutes, and check for leaks.**

Simpo PDF Merge and Split Unregistered Version - http://www.simpopdf.com

Thermostat (Cont'd)

INSTALLATION

When installing water inlet apply liquid gasket as shown.

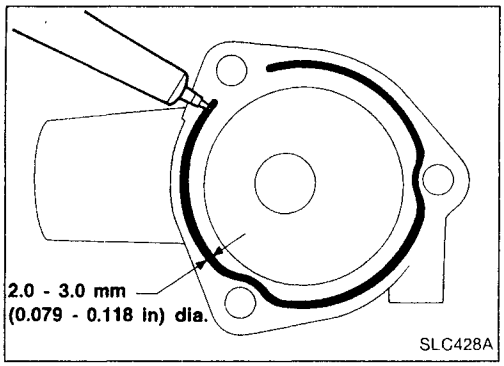

Water Outlet

INSPECTION

Visually inspect for water leaks. If there is leakage, apply liquid gasket.

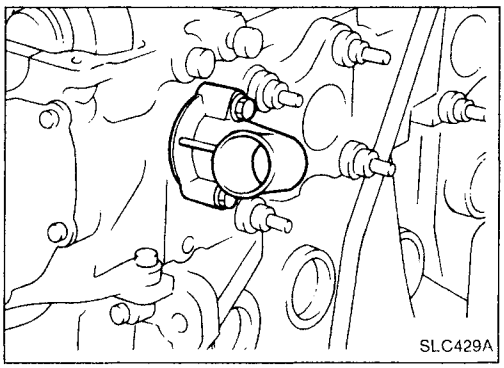

INSTALLATION

When installing water outlet, apply liquid gasket as shown.

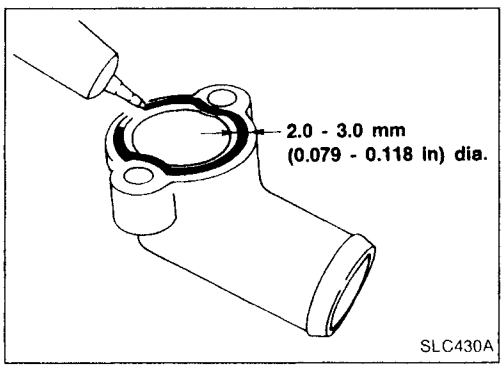

Simpo PDF Merge and Split Unregistered Version - http://www.simpopdf.com

Radiator

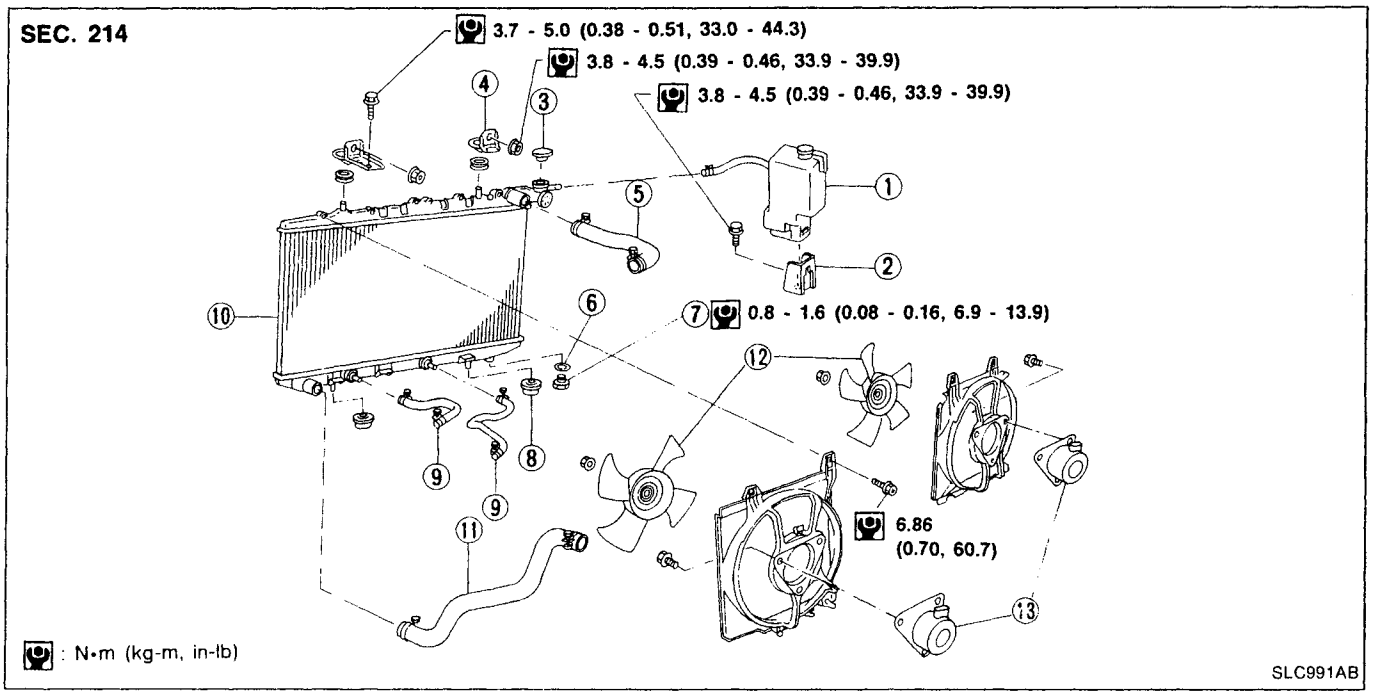

① Reservoir tank
② Reservoir tank bracket
③ Radiator cap
④ Mounting bracket
⑤ Upper hose
⑥ Washer
⑦ Drain plug
⑧ Mounting rubber
⑨ Oil cooler hose (A/T models)
⑩ Radiator
⑪ Lower hose
⑫ Cooling fan
⑬ Cooling fan motor

Cooling fan control system

- Cooling fans are controlled by the ECM. For details, refer to EC section ("Cooling Fan Control", "TROUBLE DIAGNOSES").

Refilling engine coolant

- For details on refilling engine coolant, refer to MA section ("REFILLING ENGINE COOLANT", "Changing Engine Coolant").

Simpo PDF Merge and Split Unregistered Version - http://www.simpopdf.com

Lubrication Circuit

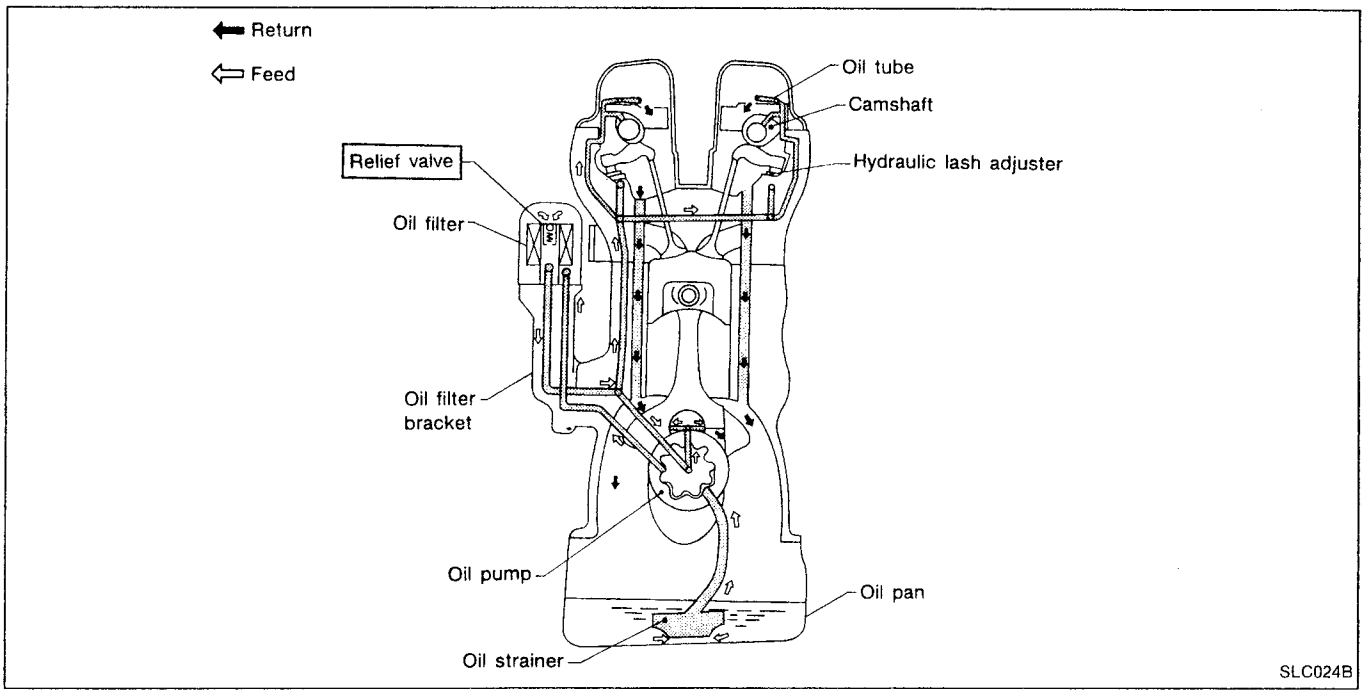

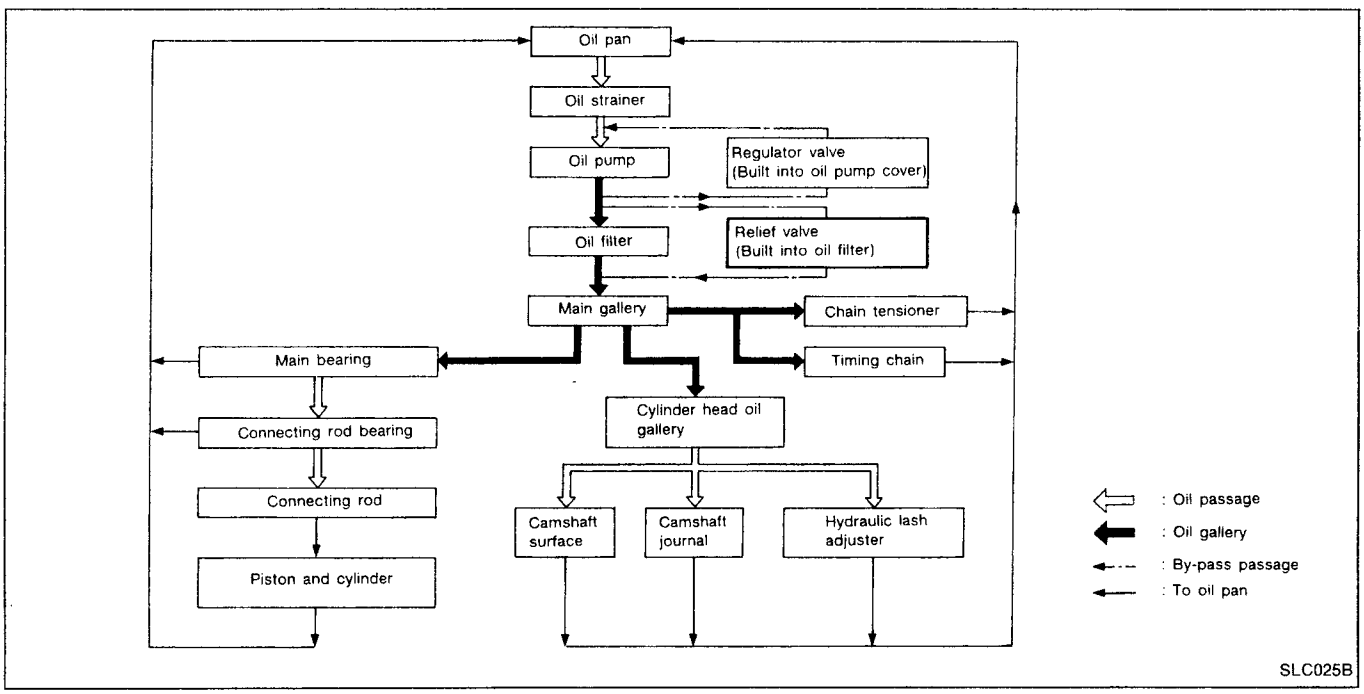

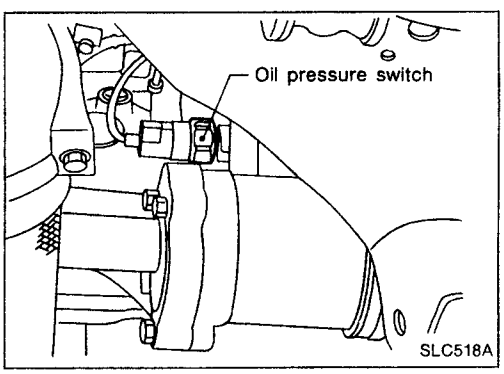

Oil Pressure Check

WARNING:

- **Be careful not to burn yourself, as the engine and oil may be hot.**
- **Oil pressure check should be done in "Neutral position".**

1. Check oil level.
2. Remove oil pressure switch.

Simpo PDF Merge and Split Unregistered Version - http://www.simpopdf.com

Oil Pressure Check (Cont'd)

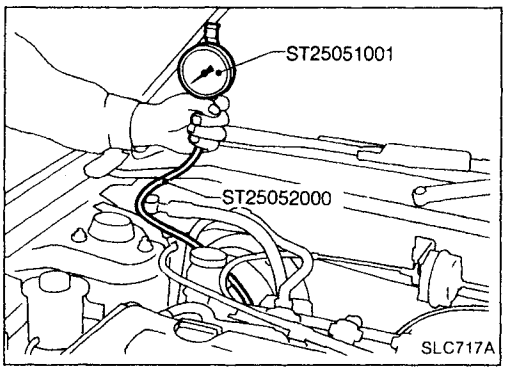

3. Install pressure gauge.
4. Start engine and warm it up to normal operating temperature.
5. Check oil pressure with engine running under no-load.

Engine speed rpm	Approximate discharge pressure kPa (bar, kg/cm^2, psi)
Idle speed	More than 78 (0.78, 0.8, 11)
3,200	314 - 392 (3.14 - 3.92, 3.2 - 4.0, 46 - 57)

If difference is extreme, check oil passage and oil pump for oil leaks.

6. Install oil pressure switch with sealant.

Oil Pump

REMOVAL

1. Remove drive belts.
2. Remove cylinder head. (Refer to EM section.)
3. Remove oil pans. (Refer to EM section.)
4. Remove oil strainer and baffle plate.
5. Remove front cover assembly.

DISASSEMBLY AND ASSEMBLY

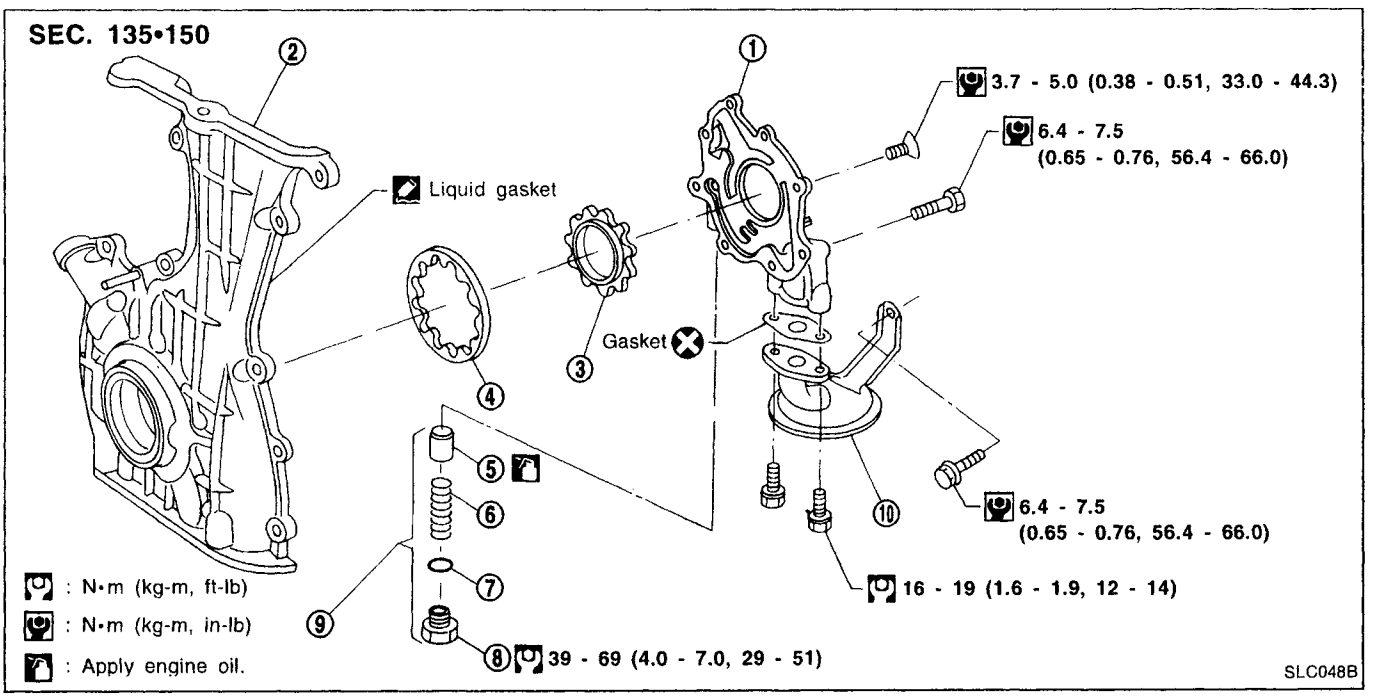

① Oil pump cover
② Front cover
③ Inner gear
④ Outer gear
⑤ Regulator valve
⑥ Spring
⑦ Shims
⑧ Plug
⑨ Regulator valve set
⑩ Oil strainer

- **Always replace oil seal, gasket and O-ring with new ones.**
- **When installing oil pump, apply engine oil to inner and outer gears.**
- **Be sure that O-rings are properly fitted.**

Simpo PDF Merge and Split Unregistered Version - http://www.simpopdf.com

Oil Pump (Cont'd)

INSTALLATION

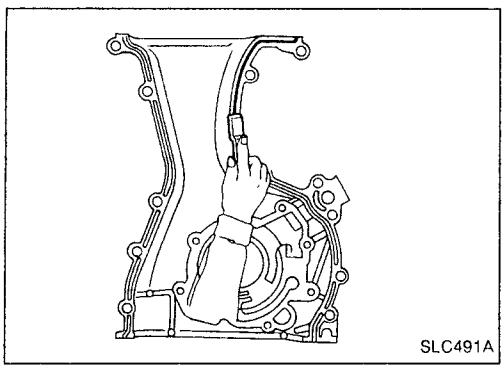
SLC491A

- Before installing front cover assembly, remove all traces of liquid gasket from mating surface using a scraper.
- Also remove traces of liquid gasket from mating surface of cylinder block.

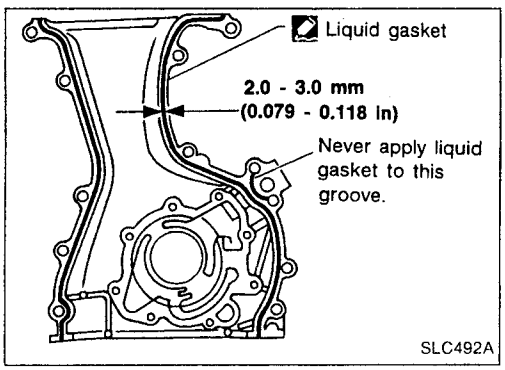

SLC492A

1. Apply a continuous bead of liquid gasket to mating surface of front cover assembly.
   - Use Genuine Liquid Gasket or equivalent.
2. Installation is the reverse order of removal.

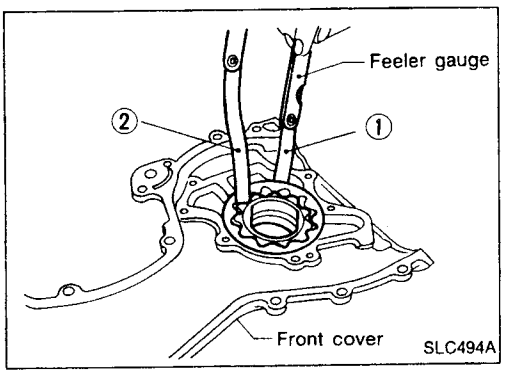

SLC494A

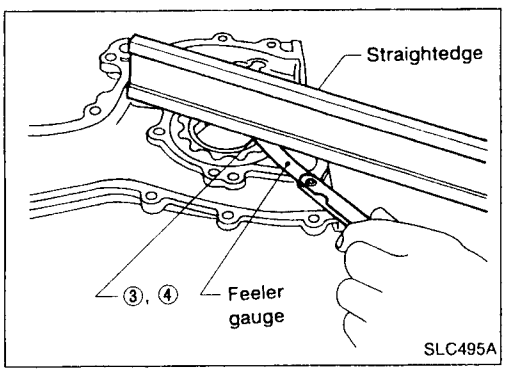

SLC495A

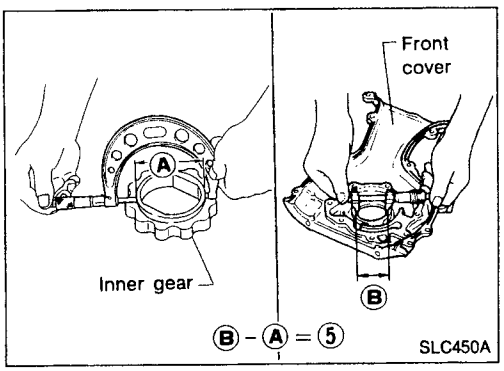

SLC450A

SLC860A

Simpo PDF Merge and Split Unregistered Version - http://www.simpopdf.com

Oil Pump (Cont'd)

INSPECTION

Using a feeler gauge, check the following clearances:

Unit: mm (in)

Body to outer gear clearance ①	0.114 - 0.200 (0.0045 - 0.0079)
Inner gear to outer gear tip clearance ②	Below 0.18 (0.0071)
Body to inner gear clearance ③	0.05 - 0.09 (0.0020 - 0.0035)
Body to outer gear clearance ④	0.05 - 0.11 (0.0020 - 0.0043)
Inner gear to brazed portion of housing clearance ⑤	0.045 - 0.091 (0.0018 - 0.0036)

- **If the tip clearance (②) exceeds the limit, replace gear set.**
- **If body to gear clearances (①, ③, ④, ⑤) exceed the limit, replace front cover assembly.**

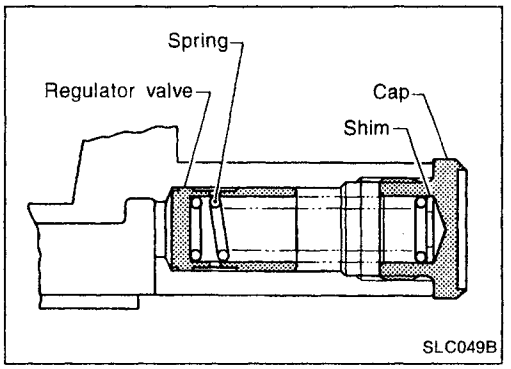

REGULATOR VALVE INSPECTION

1. Visually inspect components for wear and damage.
2. Check oil pressure regulator valve sliding surface and valve spring.
3. Coat regulator valve with engine oil.
   Check that it falls smoothly into the valve hole by its own weight.

If damaged, replace regulator valve set or oil pump cover.

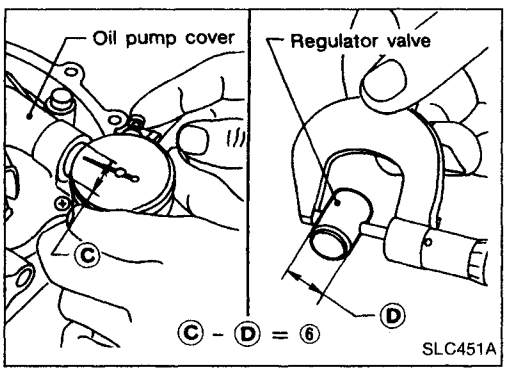

4. Check regulator valve to oil pump cover clearance.
   Clearance:
   ⑥ : 0.040 - 0.097 mm (0.0016 - 0.0038 in)

If it exceeds the limit, replace oil pump cover.

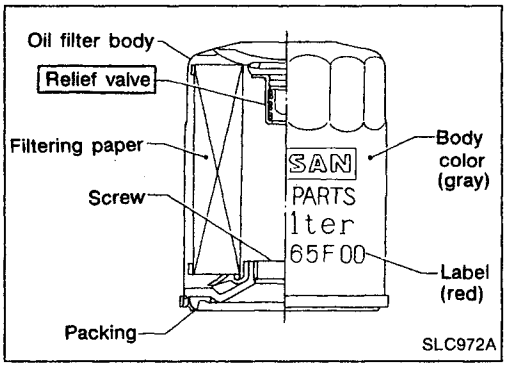

Oil Filter

The oil filter is a small, full-flow cartridge type and is provided with a relief valve.

- **The new and existing oil filter designs differ from each other and are not interchangeable.**
- **Use Tool KV10115801 for removing oil filter.**

Simpo PDF Merge and Split Unregistered Version - http://www.simpopdf.com

Cooling Circuit

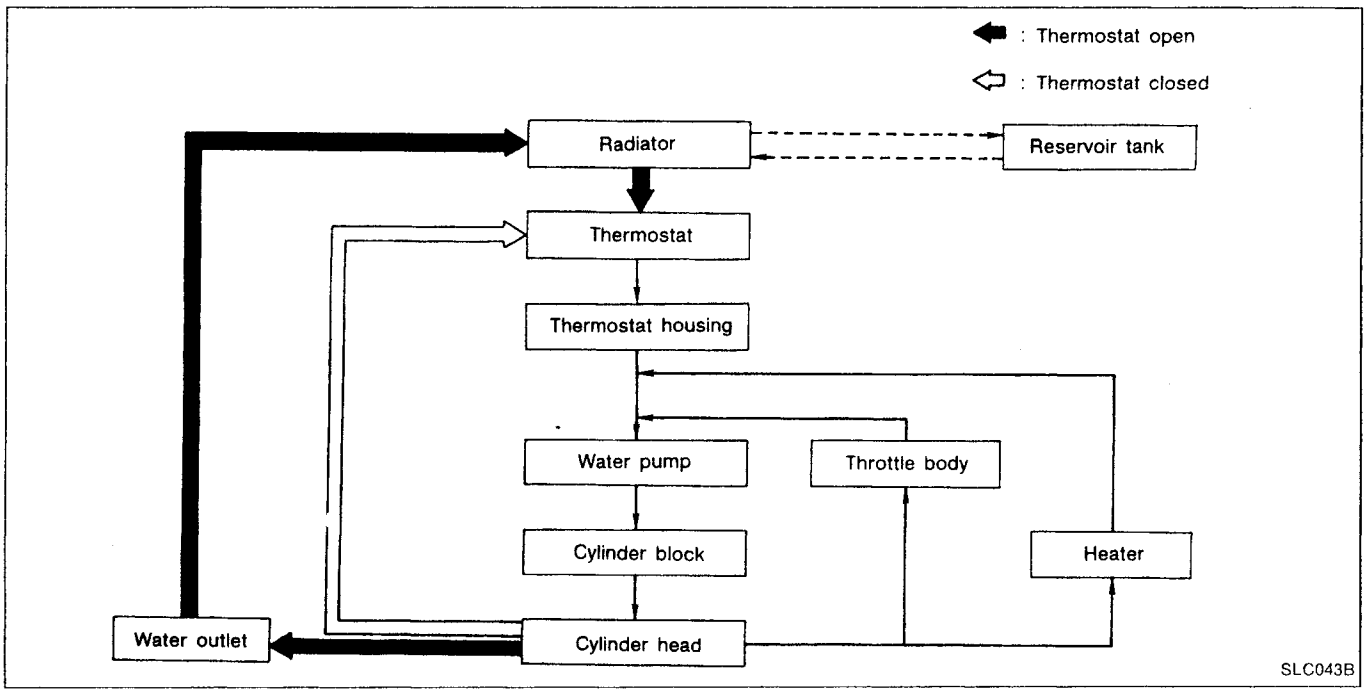

System Check

WARNING:
Never remove the radiator cap when the engine is hot; serious burns could be caused by high pressure fluid escaping from the radiator.
Wrap a thick cloth around the cap and carefully remove it by turning it a quarter turn to allow built-up pressure to escape and then turn the cap all the way off.

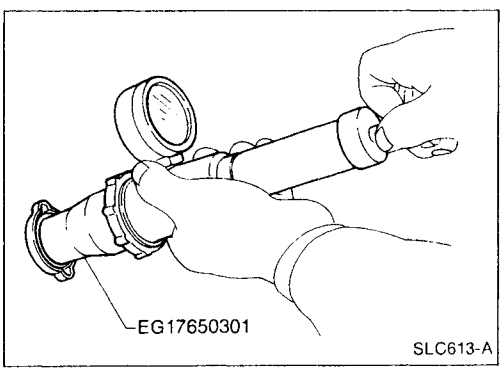

Cooling System Inspection

CHECKING HOSES

Check water hoses for proper attachment, leaks, cracks, damage, loose connections, chafing and deterioration.

CHECKING RADIATOR CAP

To check radiator cap, apply pressure to cap with a tester.

Radiator cap relief pressure:
Standard
78 - 98 kPa
(0.78 - 0.98 bar, 0.8 - 1.0 kg/cm^2, 11 - 14 psi)
Limit
59 - 98 kPa
(0.59 - 0.98 bar, 0.6 - 1.0 kg/cm^2, 9 - 14 psi)

Simpo PDF Merge and Split Unregistered Version - http://www.simpopdf.com

Cooling System Inspection (Cont'd)

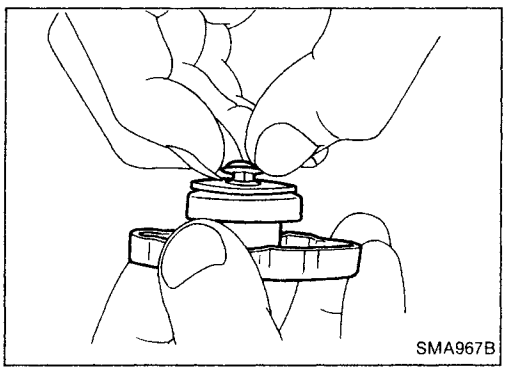

Pull the negative pressure valve to open it.
Check that it closes completely when released.

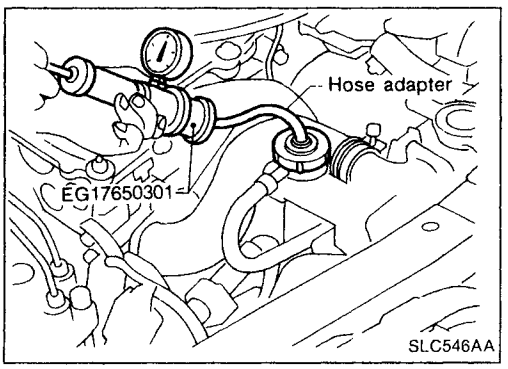

CHECKING COOLING SYSTEM FOR LEAKS

To check for leakage, apply pressure to the cooling system with a tester.

Testing pressure:
157 kPa (1.57 bar, 1.6 kg/cm^2, 23 psi)

CAUTION:
Higher than the specified pressure may cause radiator damage.

Water Pump

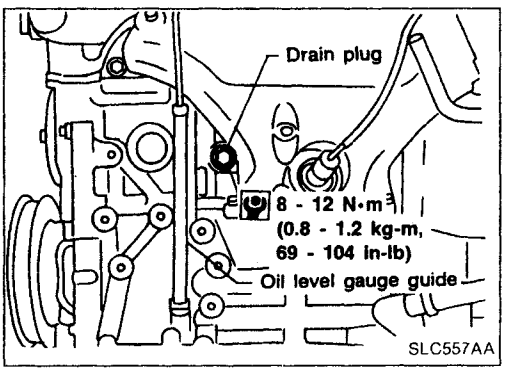

REMOVAL

1. Drain coolant from radiator.
2. Remove cylinder block drain plug located at left front of cylinder block and drain coolant.
3. Remove front RH wheel and engine side cover.
4. Remove drive belts.
5. Remove front engine mounting.

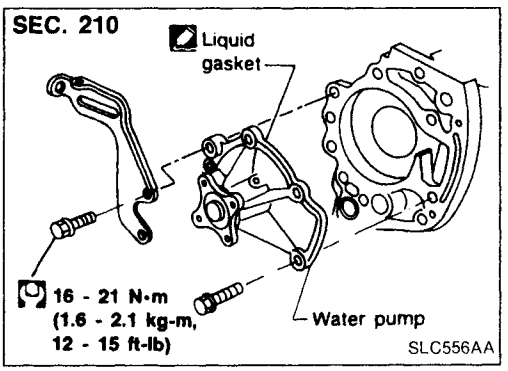

6. Remove water pump.

CAUTION:
- **When removing water pump assembly, be careful not to get coolant on drive belt.**
- **Water pump cannot be disassembled and should be replaced as a unit.**
- **After installing water pump, connect hose and clamp securely, then check for leaks using radiator cap tester.**

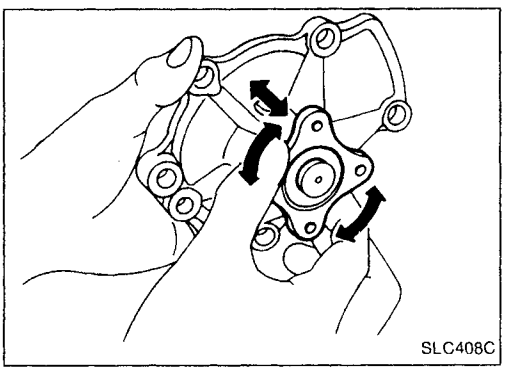

INSPECTION

1. Check body assembly for rust or corrosion.
2. Check for rough operation due to excessive end play.

Simpo PDF Merge and Split Unregistered Version - http://www.simpopdf.com

Water Pump (Cont'd)

INSTALLATION

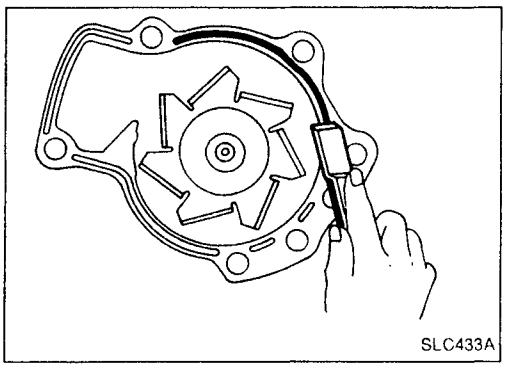
SLC433A

1. Before installing, remove all traces of liquid gasket from mating surface of water pump using a scraper.
- Also remove traces of liquid gasket from mating surface of cylinder block.

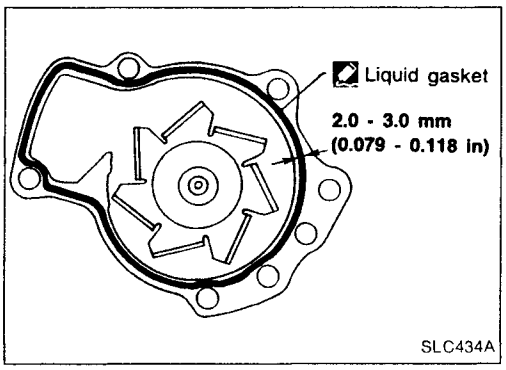

SLC434A

2. Apply a continuous bead of liquid gasket to mating surface of water pump.
- Use Genuine Liquid Gasket or equivalent.

Thermostat

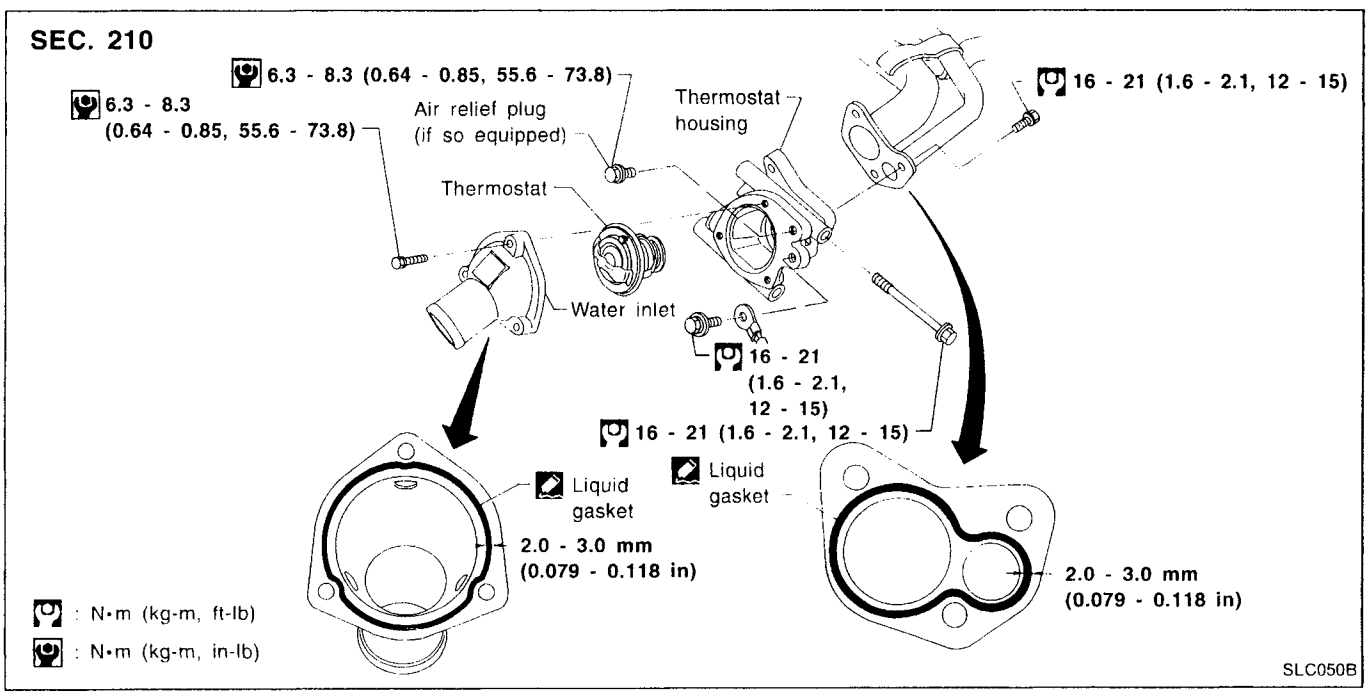

SLC050B

Simpo PDF Merge and Split Unregistered Version - http://www.simpopdf.com

Thermostat (Cont'd)

REMOVAL AND INSTALLATION

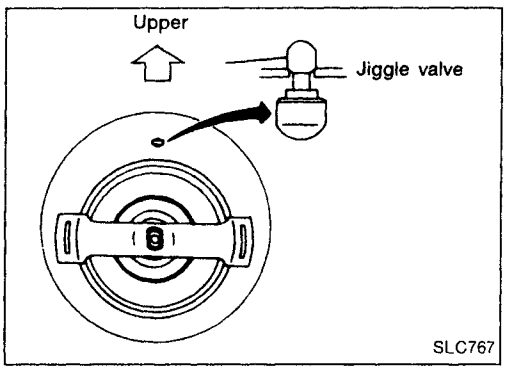

1. Drain engine coolant.
2. Remove lower radiator hose.
3. Remove water inlet, then take out thermostat.
4. Install thermostat with jiggle valve or air bleeder facing upward.

- **After installation, run engine for a few minutes, and check for leaks.**
- **Be careful not to spill coolant over engine compartment. Use a rag to absorb coolant.**

INSPECTION

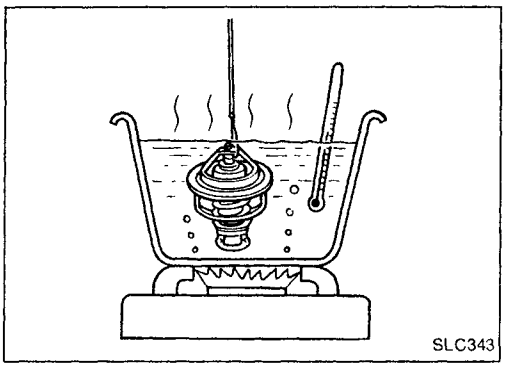

1. Check for valve seating condition at ordinary temperatures. It should seat tightly.
2. Check valve opening temperature and valve lift.

Valve opening temperature	°C (°F)	76.5 (170)
Valve lift	mm/°C (in/°F)	More than 8/90 (0.31/194)

3. Then check if valve closes at 5°C (9°F) below valve opening temperature.

Water Outlet

INSPECTION

Visually inspect for water leaks. If there is leakage, apply liquid gasket.

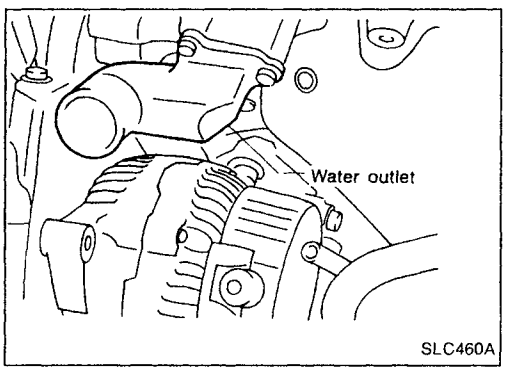

INSTALLATION

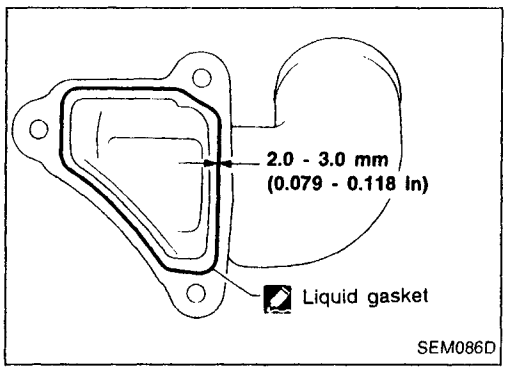

1. Before installing, remove all traces of liquid gasket from mating surface of water outlet using a scraper.

- Also remove traces of liquid gasket from mating surface of cylinder head.

2. Apply a continuous bead of liquid gasket to mating surface of water outlet.

- Use Genuine Liquid Gasket or equivalent.

Simpo PDF Merge and Split Unregistered Version - http://www.simpopdf.com

Radiator

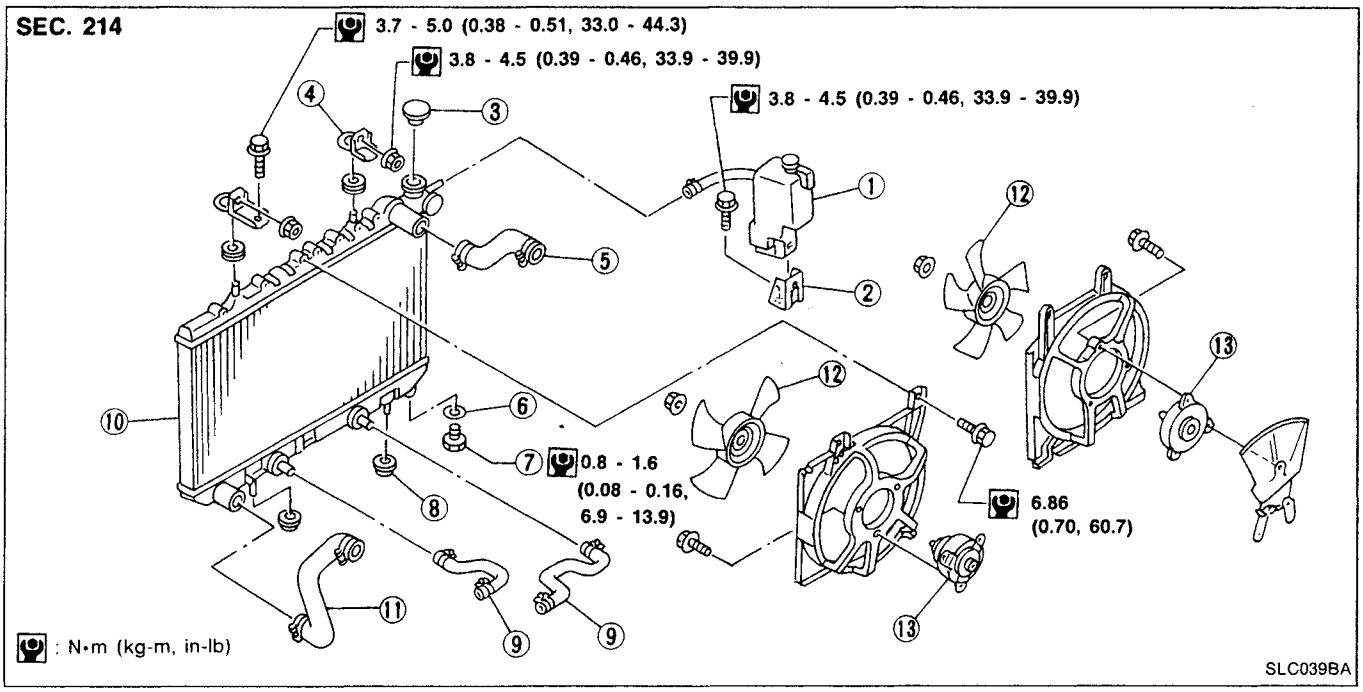

① Reservoir tank
② Reservoir tank bracket
③ Radiator cap
④ Mounting bracket
⑤ Upper hose
⑥ Washer
⑦ Drain plug
⑧ Mounting rubber
⑨ Oil cooler hose (A/T models)
⑩ Radiator
⑪ Lower hose
⑫ Cooling fan
⑬ Cooling fan motor

Cooling fan control system

- Cooling fans are controlled by the ECM. For details, refer to EC section ("Cooling Fan Control", "TROUBLE DIAGNOSES").

Refilling engine coolant

- For details on refilling engine coolant, refer to MA section ("REFILLING ENGINE COOLANT", "Changing Engine Coolant").

Simpo PDF Merge and Split Unregistered Version - http://www.simpopdf.com

Lubrication Circuit

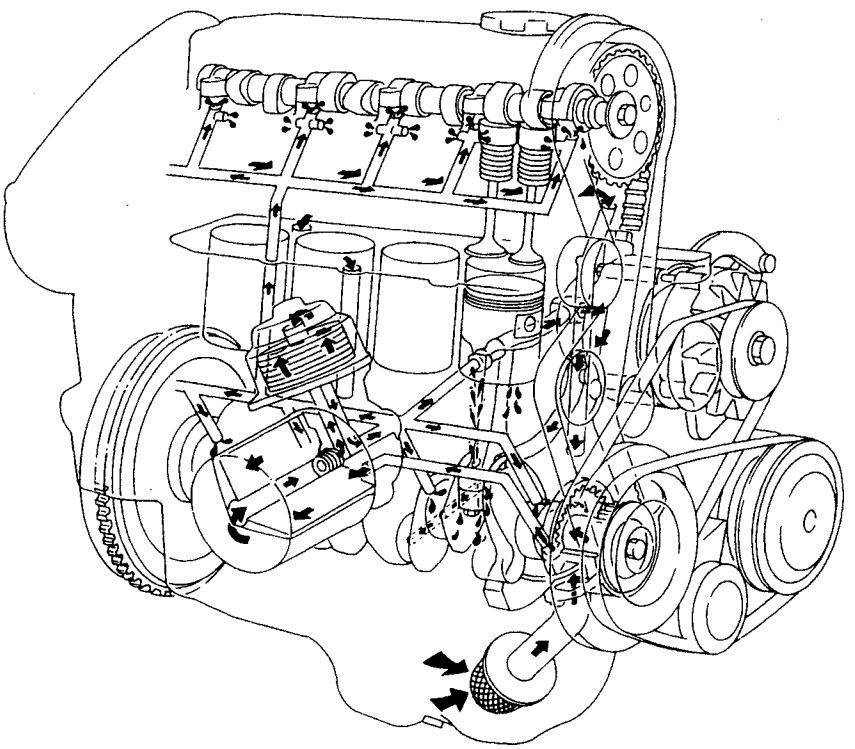

Note: : Oil gallery in cylinder block
: Oil passage
: By-pass passage

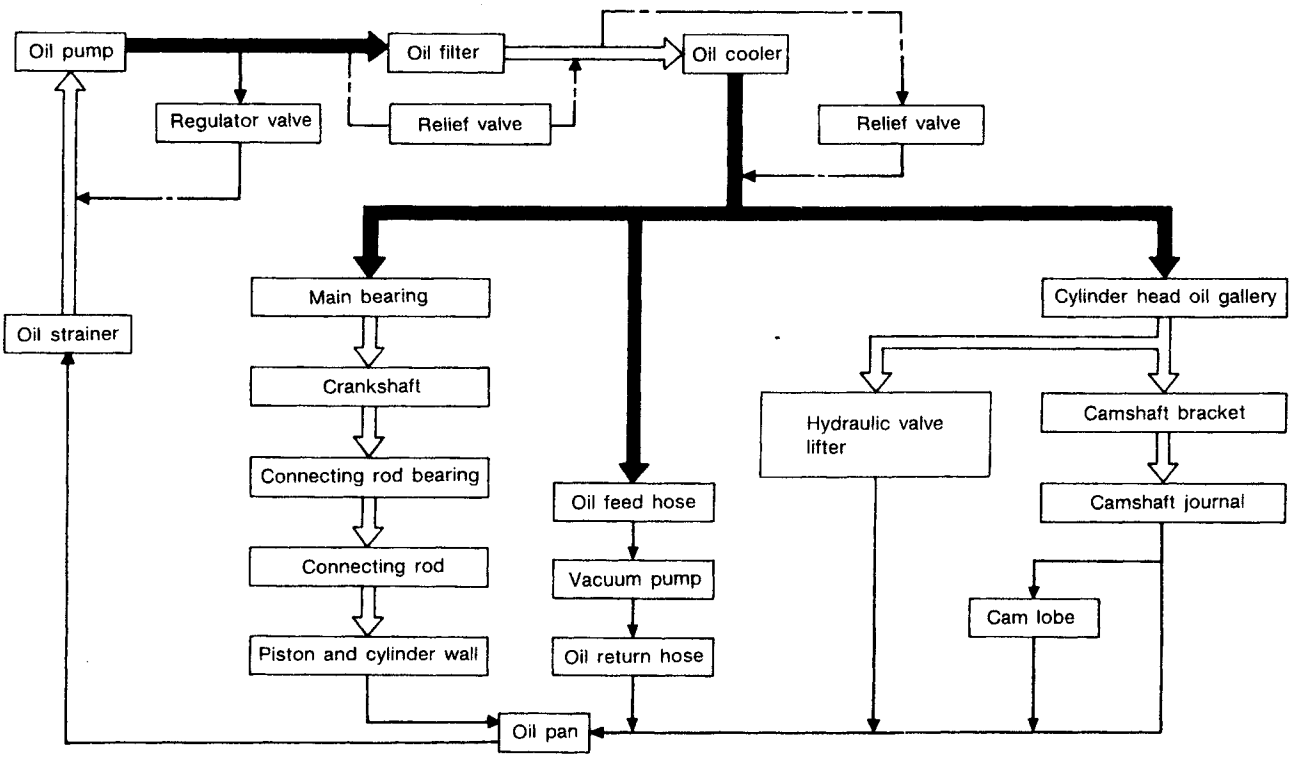

SLC609AA

Simpo PDF Merge and Split Unregistered Version - http://www.simpopdf.com

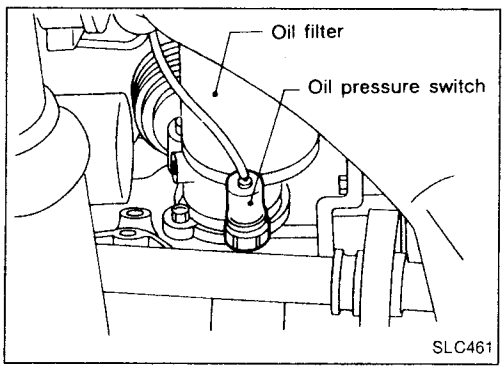

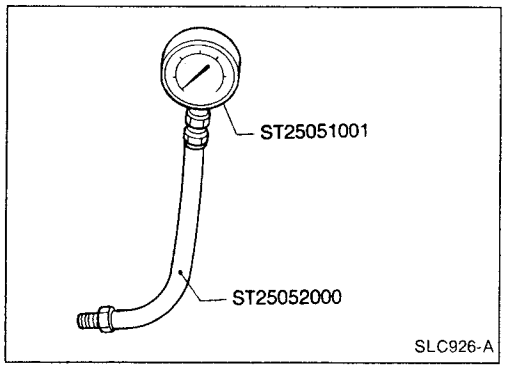

Oil Pressure Check

WARNING:

- **Be careful not to burn yourself, as the engine and oil may be hot.**
- **Oil pressure check should be done in "Neutral" gear position.**

1. Check oil level.
2. Remove oil pressure switch.
3. Install pressure gauge.
4. Start engine and warm it up to normal operating temperature.
5. Check oil pressure with engine running under no-load.

Engine rpm	Approximate discharge pressure kPa (bar, kg/cm^2, psi)
Idle speed	More than 59 (0.59, 0.6, 9)
2,000	294 (2.9, 3, 43)

If difference is extreme, check oil passage and oil pump for oil leaks.

6. Install oil pressure switch with sealant.

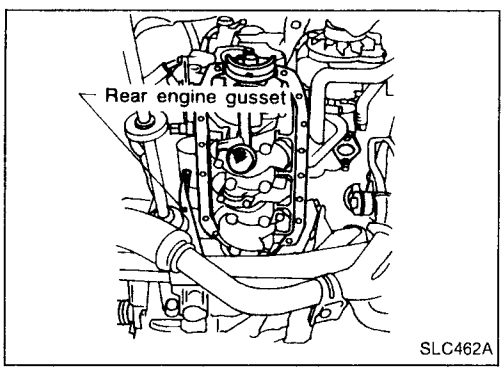

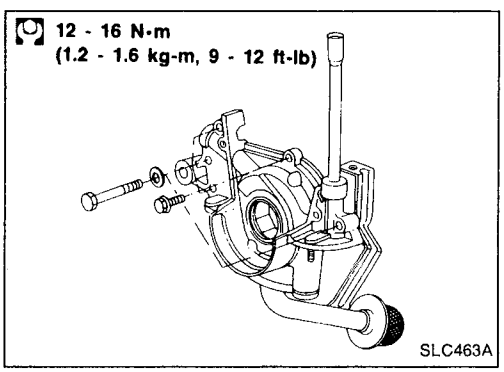

Oil Pump

REMOVAL AND INSTALLATION

1. Drain engine coolant and engine oil.
2. Remove upper radiator hose, drive belts, crank pulley, timing belt covers and timing belt.
3. Remove exhaust front tube, timing belt pulley and rear engine gusset (bar type), then remove oil pan.
4. Remove oil pump assembly with oil strainer.
5. Reinstall any part removed. Refill engine oil and engine coolant.

- Apply liquid gasket to oil pump.
- Apply liquid gasket to oil pan.
- Apply liquid gasket to both ends of oil pan oil seals.
- Install oil pan, fitting oil seals in the correct position.

Simpo PDF Merge and Split Unregistered Version - http://www.simpopdf.com

Oil Pump (Cont'd)

DISASSEMBLY AND ASSEMBLY

When installing oil pump, apply engine oil to inner and outer gears.

SEC. 150

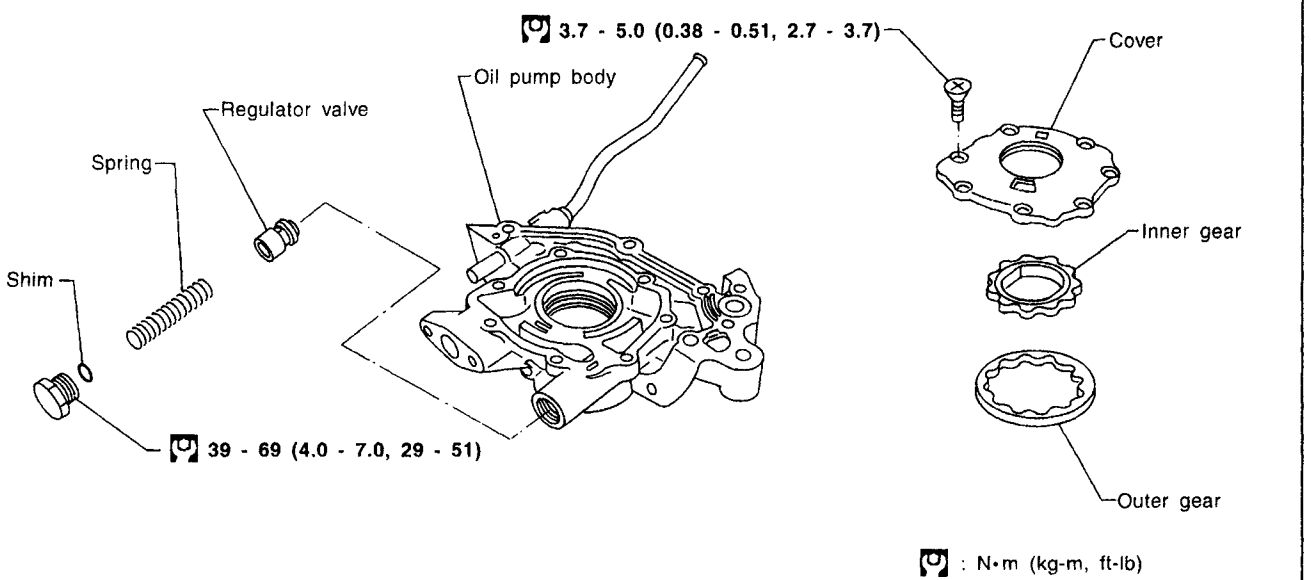

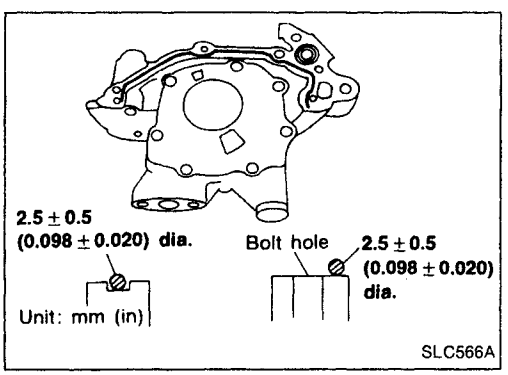

- Apply liquid gasket when installing oil pump onto engine.

Simpo PDF Merge and Split Unregistered Version - http://www.simpopdf.com

Oil Pump (Cont'd)

INSPECTION

Using a feeler gauge, check the following clearances.

Unit: mm (in)

Body to outer gear clearance ①	0.12 - 0.20 (0.0047 - 0.0079)
Outer gear to inner gear clearance ②	less than 0.18 (0.0071)
Housing to inner gear clearance ③	0.05 - 0.09 (0.0020 - 0.0035)
Housing to outer gear clearance ④	0.05 - 0.11 (0.0020 - 0.0043)
Inner gear to housing clearance ⑤	0.05 - 0.09 (0.0020 - 0.0035)

If it exceeds the limit, replace gear set or entire oil pump assembly.

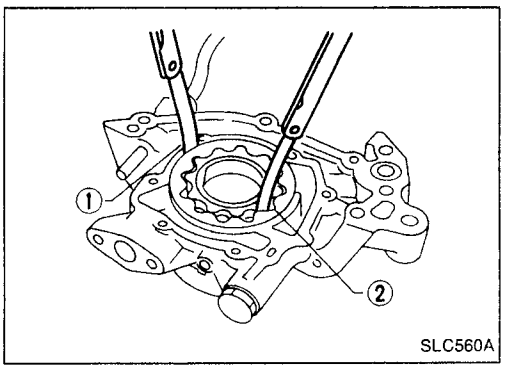

SLC560A

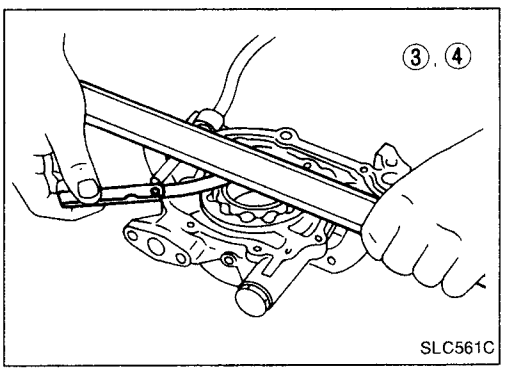

SLC561C

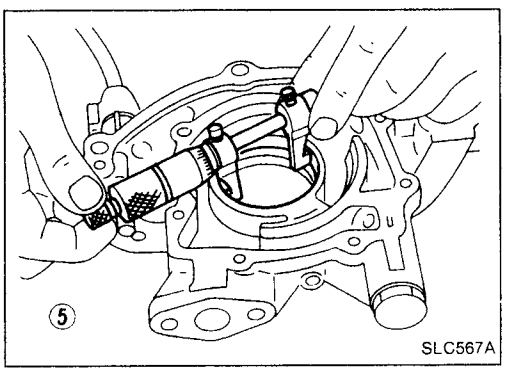

SLC567A

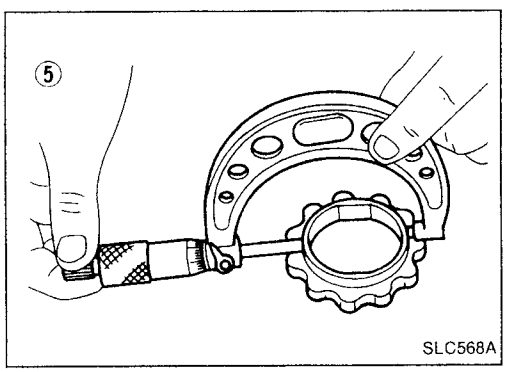

SLC568A

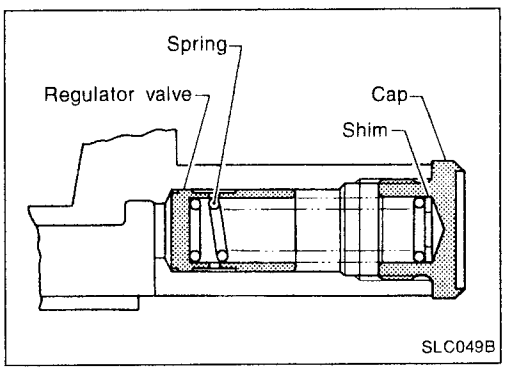

SLC049B

REGULATOR VALVE INSPECTION

1. Visually inspect components for wear and damage.
2. Check oil pressure regulator valve sliding surface and valve spring.
3. Coat regulator valve with engine oil. Check that it falls freely into the valve hole by its own weight.

If damaged, replace regulator valve set or oil pump assembly.

Simpo PDF Merge and Split Unregistered Version - http://www.simpopdf.com

Oil Pump (Cont'd)

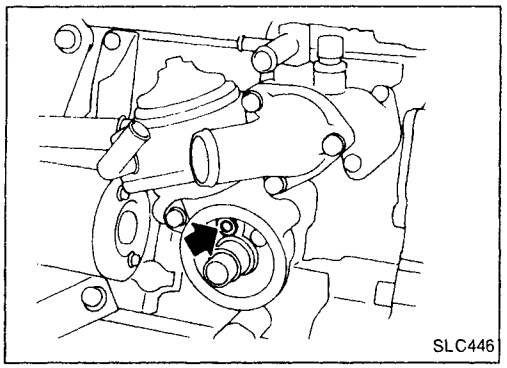

OIL PRESSURE RELIEF VALVE INSPECTION

Inspect oil pressure relief valve (indicated by arrow) for movement, cracks and breaks by pushing the ball. If replacement is necessary, remove valve by prying it out with a suitable tool. Install a new valve in place by tapping it.

Oil Cooler

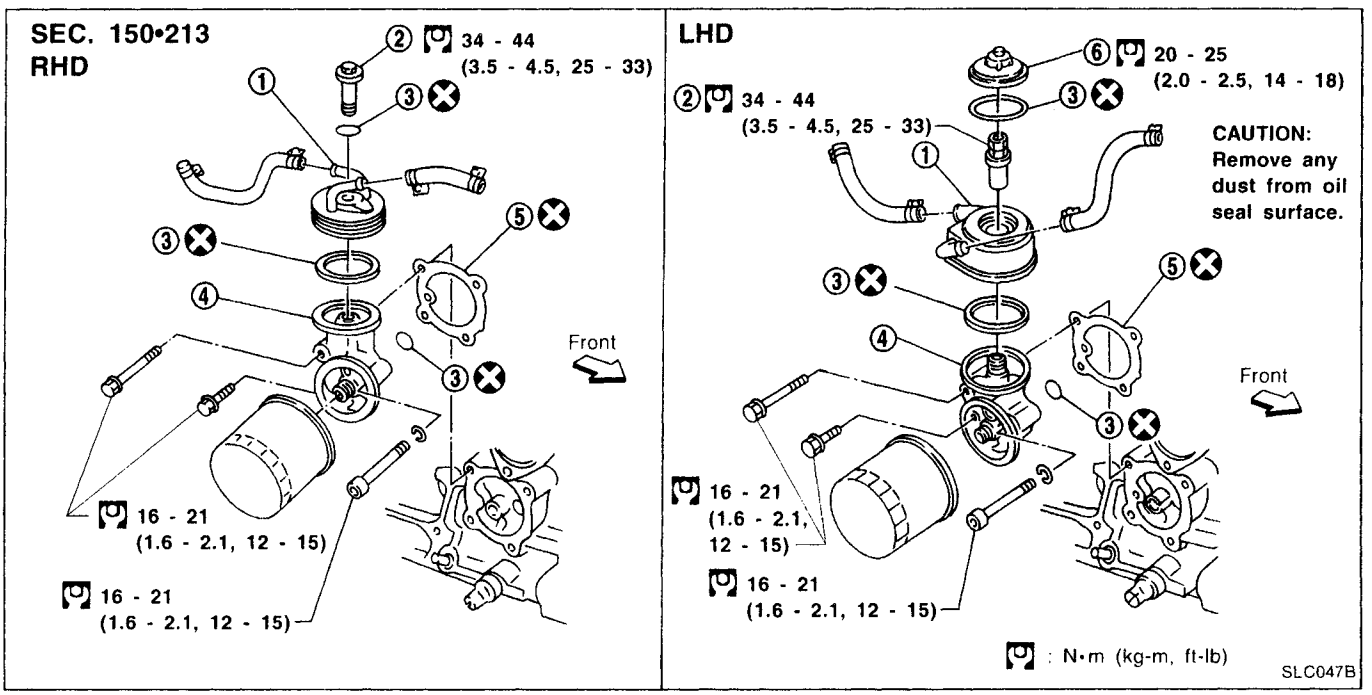

① Oil cooler
② Connector
③ O-ring
④ Oil filter bracket
⑤ Gasket
⑥ Cover

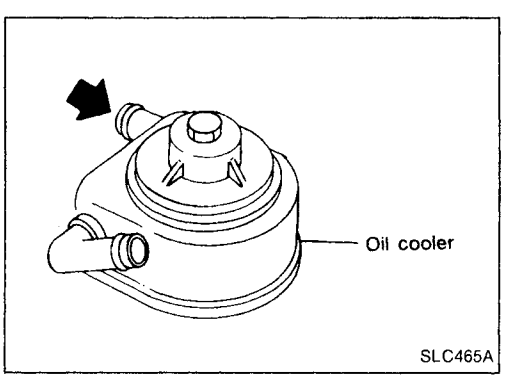

INSPECTION

1. Check oil cooler element and housing for cracks.
2. Check coolant inlet of oil cooler for clogging by blowing through it.
   Replace it if necessary.

Simpo PDF Merge and Split Unregistered Version - http://www.simpopdf.com

Cooling Circuit

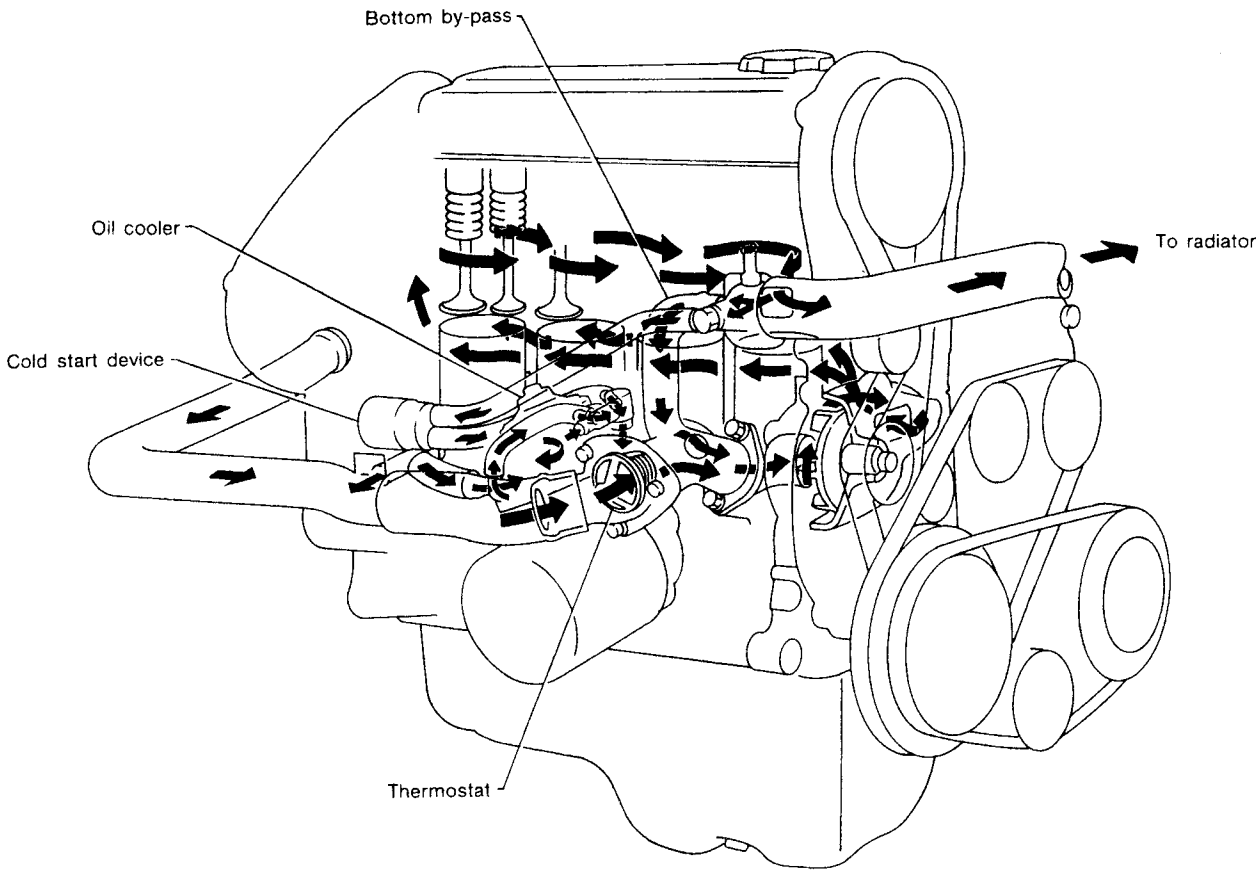

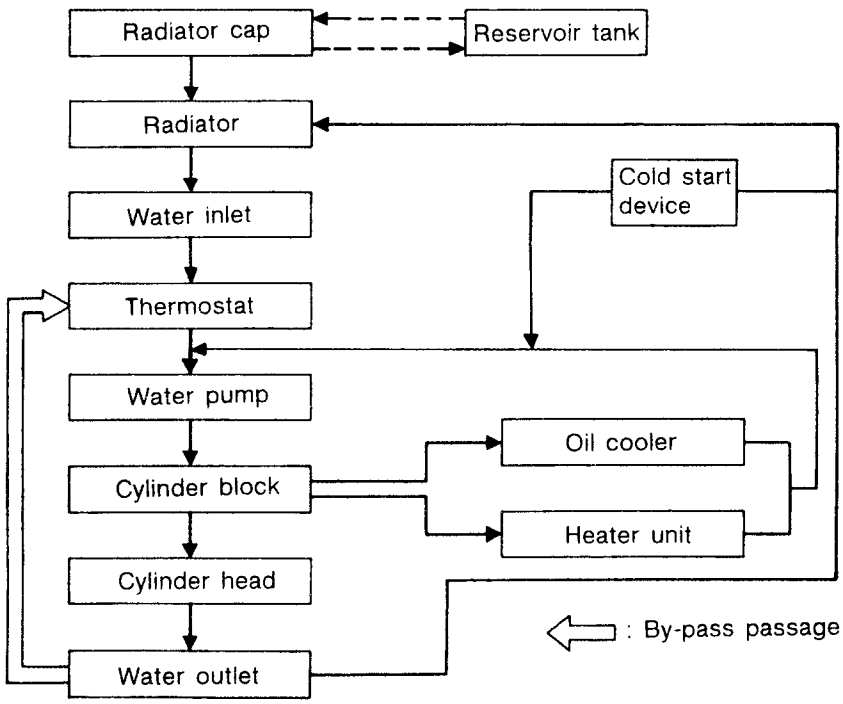

SLC407

Simpo PDF Merge and Split Unregistered Version - http://www.simpopdf.com

System Check

WARNING:
Never remove the radiator cap when the engine is hot; serious burns could be caused by high pressure fluid escaping from the radiator.
Wrap a thick cloth around cap and carefully loosen it a quarter turn to release built-up pressure. Then remove the cap completely.

CHECKING COOLING SYSTEM HOSES

Check hoses for improper attachment, leaks, cracks, damage, loose connections, chafing and deterioration.

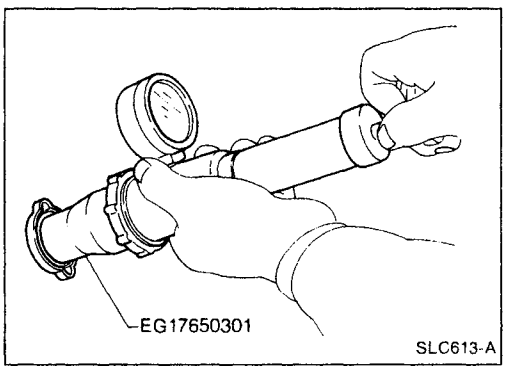

CHECKING RADIATOR CAP

To check radiator cap, apply pressure to cap with a tester.

Radiator cap relief pressure:
Standard
78 - 98 kPa
(0.78 - 0.98 bar, 0.8 - 1.0 kg/cm^2, 11 - 14 psi)
Limit
59 - 98 kPa
(0.59 - 0.98 bar, 0.6 - 1.0 kg/cm^2, 9 - 14 psi)

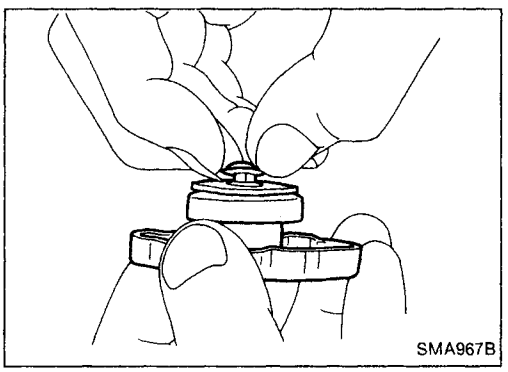

Pull the negative pressure valve to open it. Check that it closes completely when released.

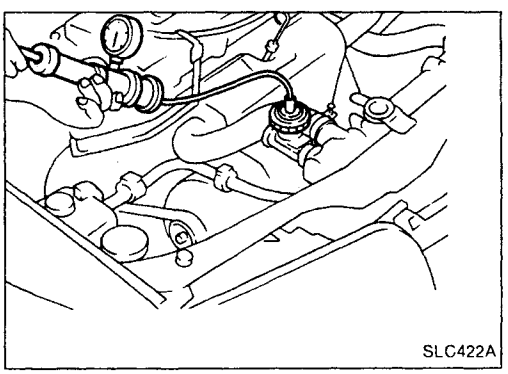

CHECKING COOLING SYSTEM FOR LEAKS

To check for leakage, apply pressure to the cooling system with a tester.

Testing pressure:
157 kPa (1.57 bar, 1.6 kg/cm^2, 23 psi)

CAUTION:
Higher than the specified pressure may cause radiator damage.

Simpo PDF Merge and Split Unregistered Version - http://www.simpopdf.com

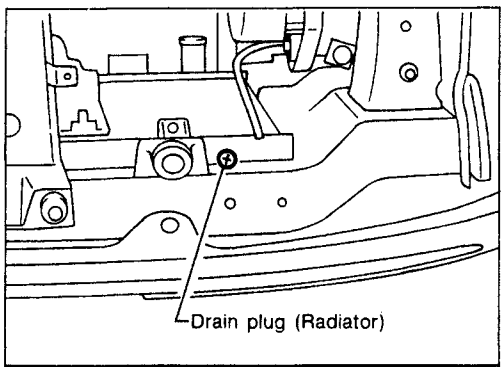

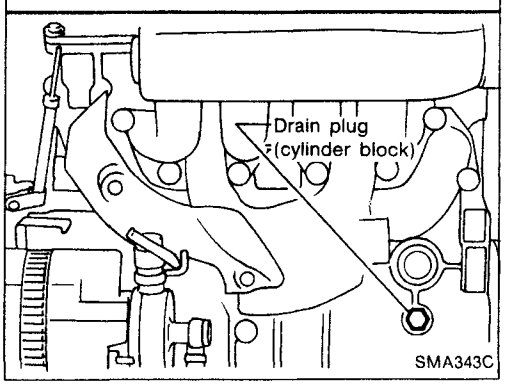

Water Pump

REMOVAL AND INSTALLATION

1. Drain engine coolant from radiator and cylinder block.
2. Remove upper radiator hose, timing belt covers, front engine mounting bracket and timing belt.
3. Remove timing belt tensioner and idler and timing belt lower back cover.

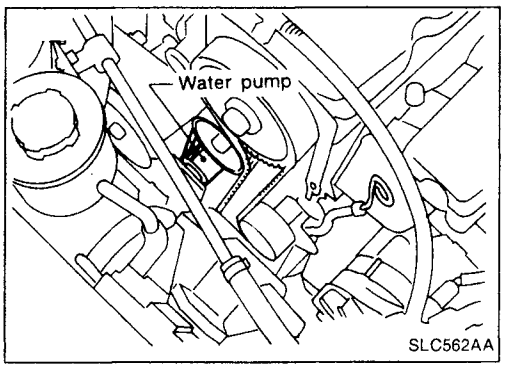

4. Remove water pump.

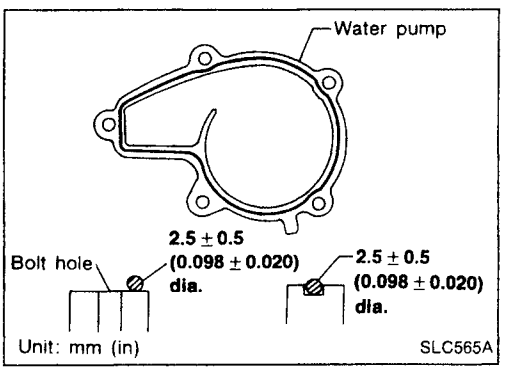

- For installation, apply liquid gasket to water pump as shown in the figure.

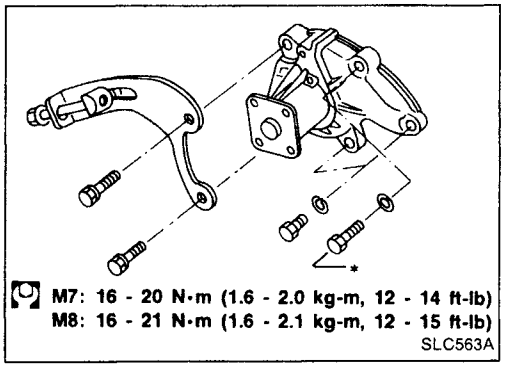

*: Apply liquid sealant to the thread.

Simpo PDF Merge and Split Unregistered Version - http://www.simpopdf.com

Water Pump (Cont'd)

INSPECTION

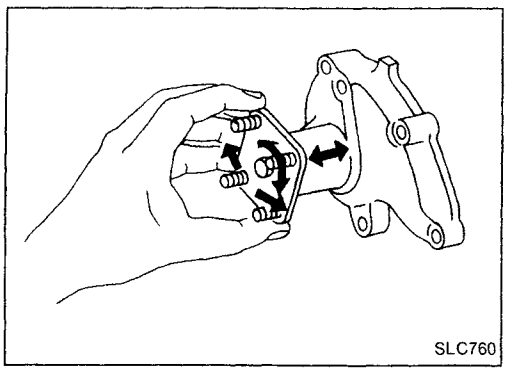

- Check body assembly for rust or corrosion.
- Check for rough operation due to excessive end play.

Thermostat

REMOVAL AND INSTALLATION

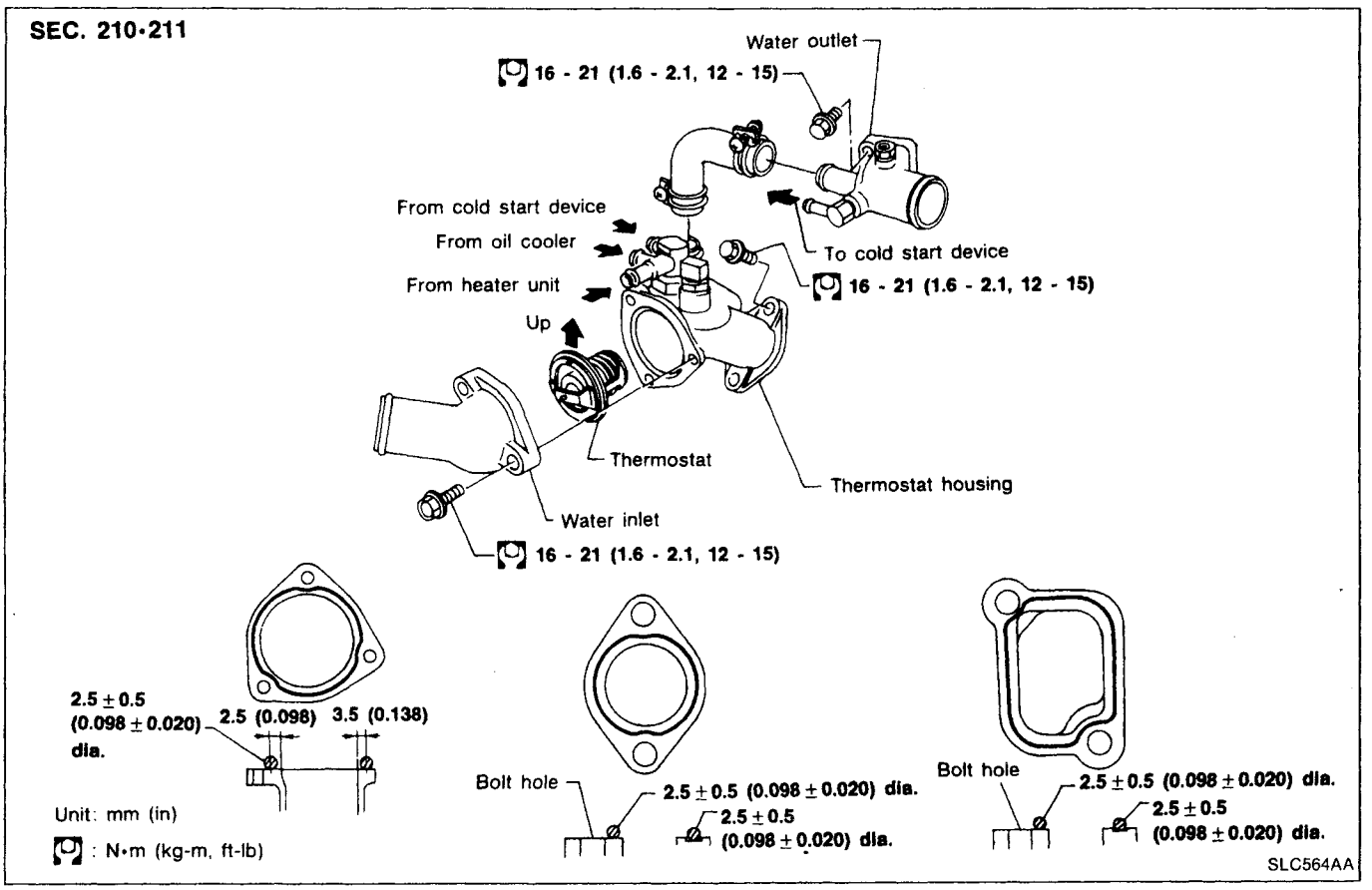

- Apply liquid gasket to water outlet, thermostat housing and water inlet.

Simpo PDF Merge and Split Unregistered Version - http://www.simpopdf.com

Thermostat (Cont'd)

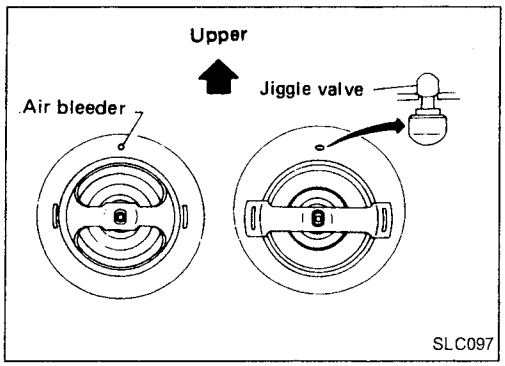

- Install thermostat with jiggle valve uppermost.
- **After installation, run engine for a few minutes, and check for leaks.**

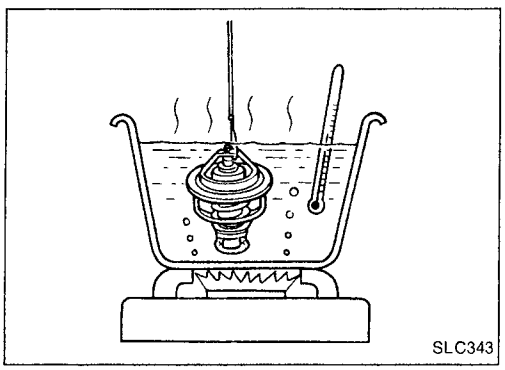

INSPECTION

1. Check for valve seating condition at ordinary temperatures. It should seat tightly.
2. Check valve opening temperature and valve lift.

Valve opening temperature	°C (°F)	88 (190)
Valve lift	mm/°C (in/°F)	More than 10/100 (0.39/212)

3. Then check if valve closes at 5°C (9°F) below valve opening temperature.

Radiator

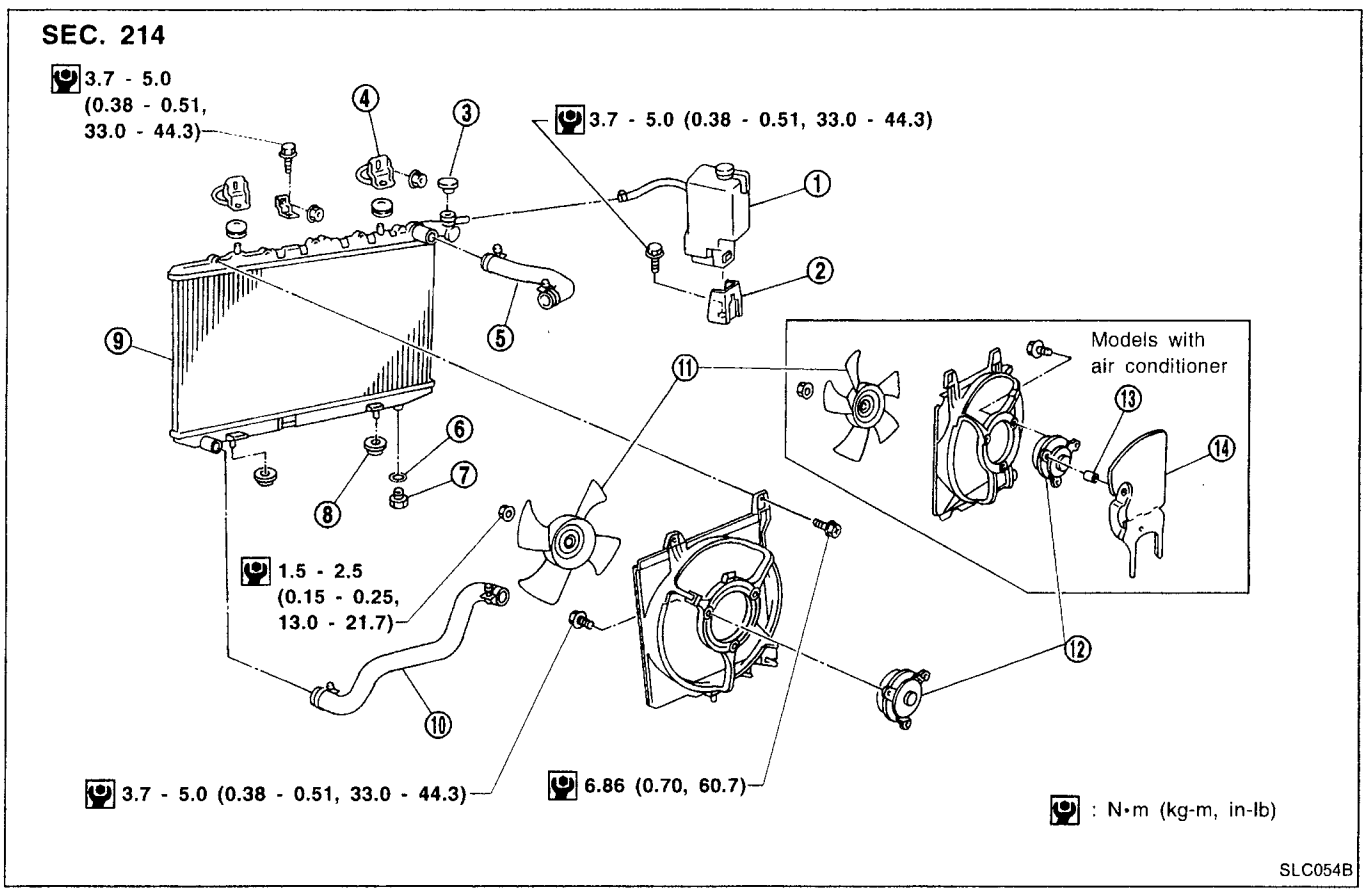

① Reservoir tank
② Reservoir tank bracket
③ Radiator cap
④ Mounting bracket
⑤ Upper radiator hose
⑥ Washer
⑦ Radiator drain plug
⑧ Mounting rubber
⑨ Radiator
⑩ Lower radiator hose
⑪ Cooling fan
⑫ Cooling fan motor
⑬ Shield spacer
⑭ Cooling fan motor shield

Simpo PDF Merge and Split Unregistered Version - http://www.simpopdf.com

Radiator (Cont'd)

Cooling fan control system

- Cooling fans are controlled by the ECM. For details, refer to EC section ("Cooling Fan Control", "TROUBLE DIAGNOSES").

Refilling engine coolant

- For details on refilling engine coolant, refer to MA section ("REFILLING ENGINE COOLANT", "Changing Engine Coolant").

Simpo PDF Merge and Split Unregistered Version - http://www.simpopdf.com

Radiator (Aluminum type)

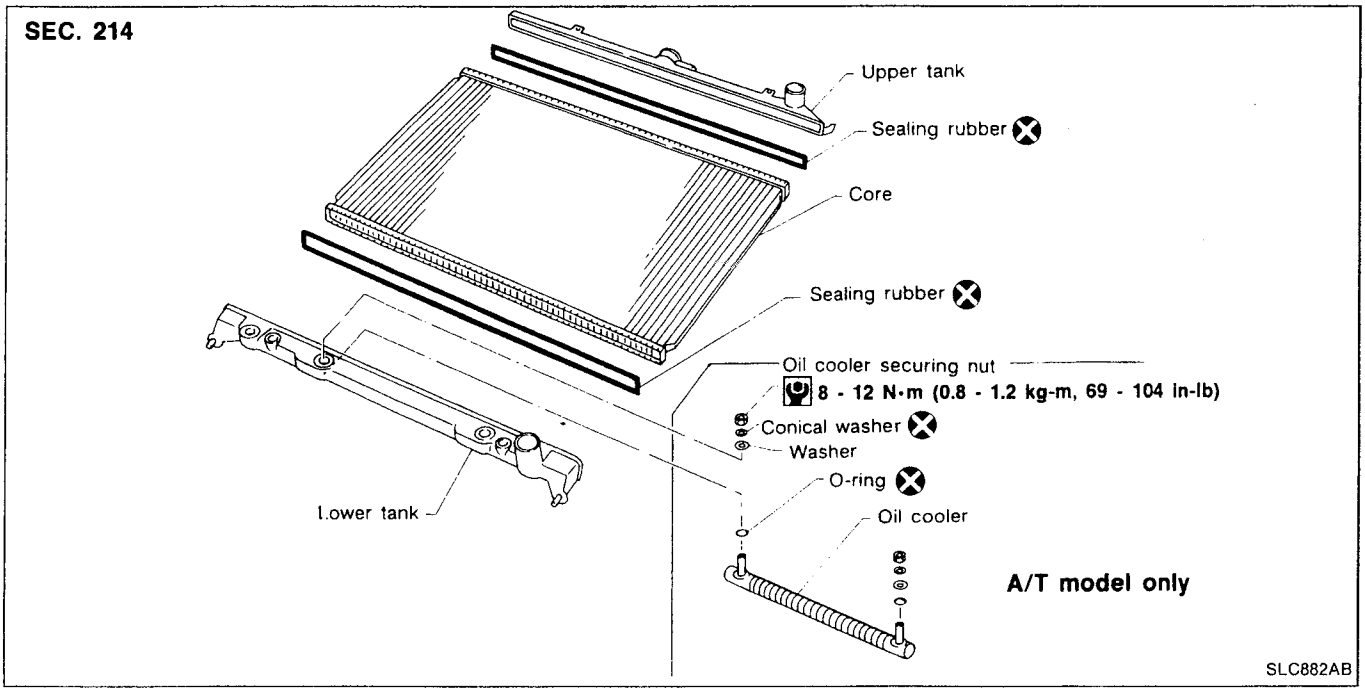

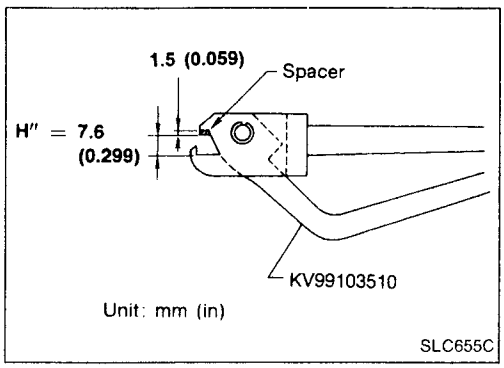

PREPARATION

1. Attach the spacer to the tip of the radiator plate pliers A. Spacer specification: 1.5 mm (0.059 in) thick x 18 mm (0.71 in) wide x 8.5 mm (0.335 in) long.
2. Make sure that when radiator plate pliers A are closed dimension H'' is approx. 7.6 mm (0.299 in).
3. Adjust dimension H'' with the spacer, if necessary.

- **If the radiator core rims cannot be crimped as specified, further modification of the radiator plate pliers A is required. Refer to the Technical Bulletin LC91-001.**

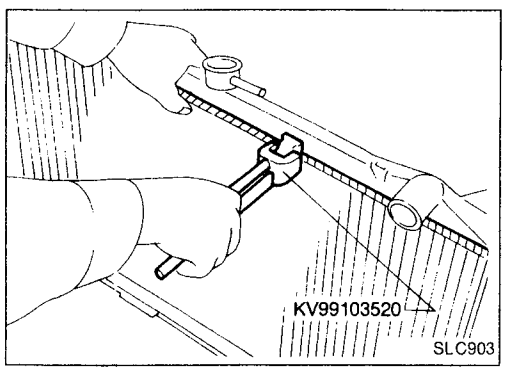

DISASSEMBLY

1. Remove tank with Tool.

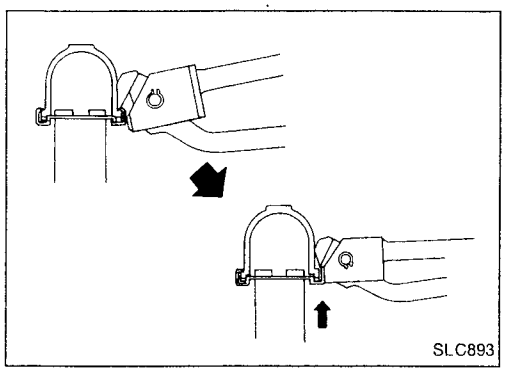

- Grip the crimped edge and bend it upwards so that Tool slips off.

Do not bend excessively.

Simpo PDF Merge and Split Unregistered Version - http://www.simpopdf.com

Radiator (Aluminum type) (Cont'd)

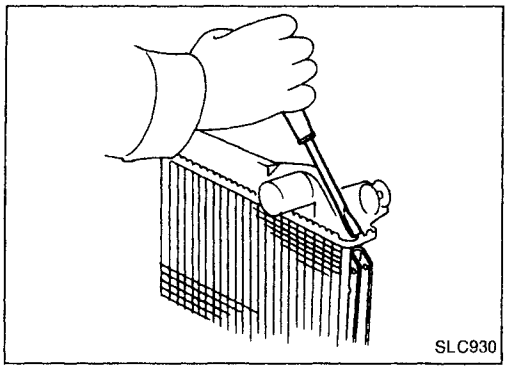

- In areas where Tool cannot be used, use a screwdriver to bend the edge up.

Be careful not to damage tank.

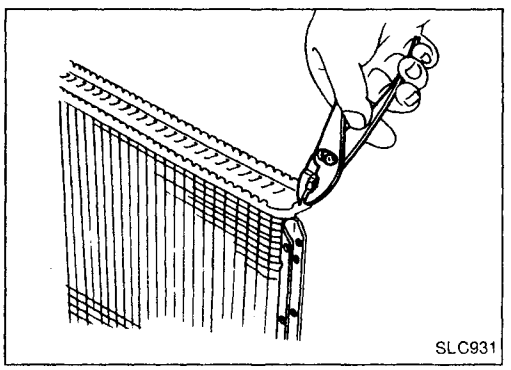

2. Make sure the edge stands straight up.
3. Remove oil cooler from tank. (A/T models only)

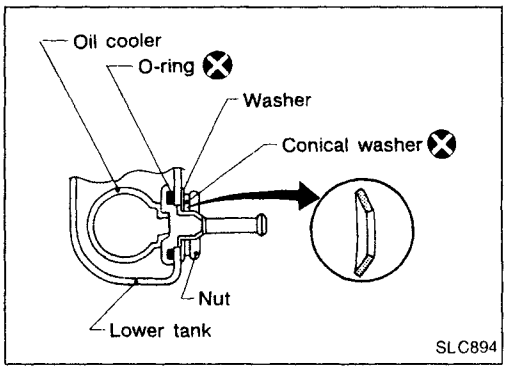

ASSEMBLY

1. Install oil cooler. (A/T models only)

Pay attention to direction of conical washer.

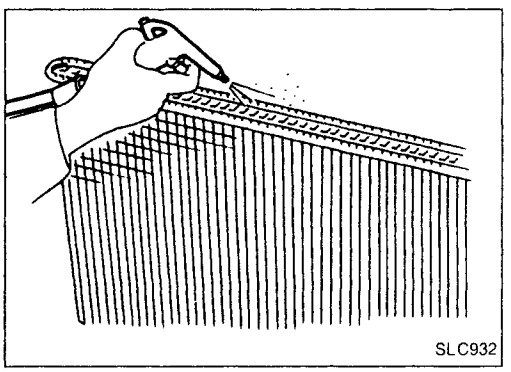

2. Clean contact portion of tank.

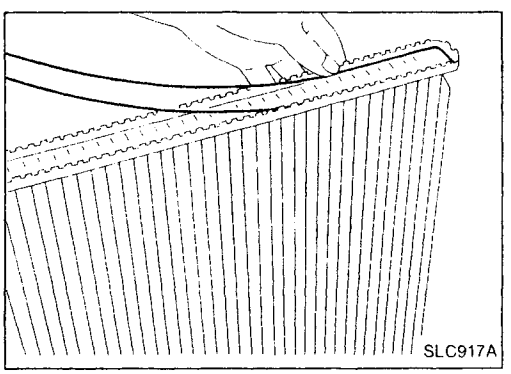

3. Install sealing rubber.

Push it in with fingers.

Be careful not to twist sealing rubber.

Simpo PDF Merge and Split Unregistered Version - http://www.simpopdf.com

Radiator (Aluminum type) (Cont'd)

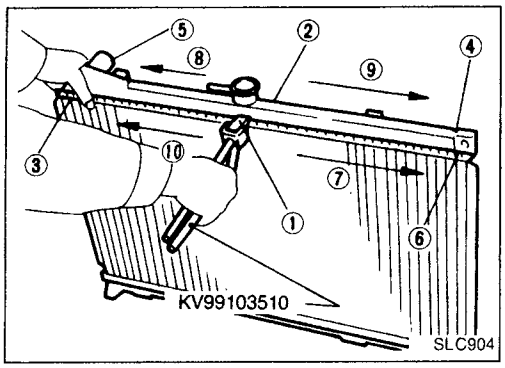

4. Caulk tank in specified sequence with Tool.

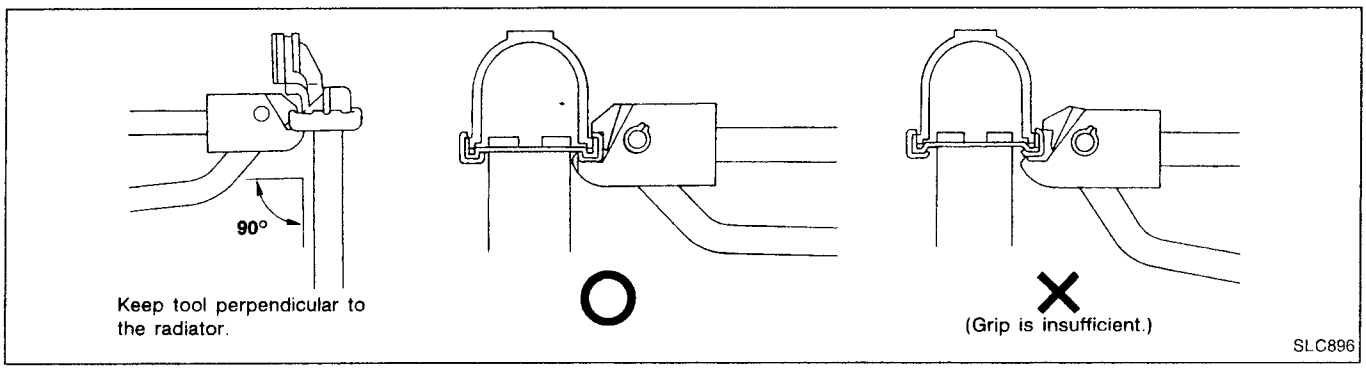

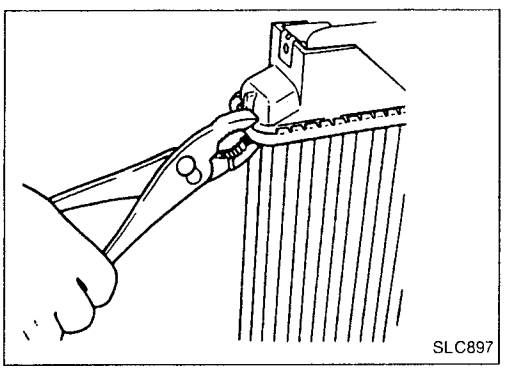

- Use pliers in the locations where Tool cannot be used.

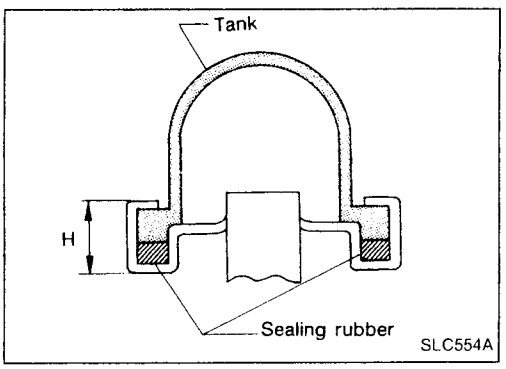

5. Make sure that the rim is completely crimped down.
   Standard height "H":
   8.0 - 8.4 mm (0.315 - 0.331 in)
6. Confirm that there is no leakage.

Refer to Inspection.

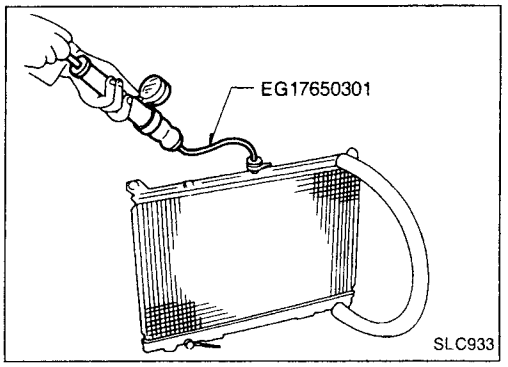

INSPECTION

Apply pressure with Tool.

Specified pressure value:
157 kPa (1.57 bar, 1.6 kg/cm^2, 23 psi)

WARNING:

To prevent the risk of the hose coming undone while under pressure, securely fasten it down with a hose clamp.
Attach a hose to the oil cooler as well. (A/T models only)

Simpo PDF Merge and Split Unregistered Version - http://www.simpopdf.com

Engine Lubrication System (GA)

Oil pressure check

Engine speed rpm	Approximate discharge pressure kPa (bar, kg/cm^2, psi)
Idle speed	More than 59 (0.59, 0.6, 9)
2,000	More than 245 (2.45, 2.5, 36)
6,000	More than 422 (4.22, 4.3, 61)

Oil pump inspection

Unit: mm (in)

Body to outer gear clearance	0.110 - 0.200 (0.0043 - 0.0079)
Inner gear to crescent clearance	0.217 - 0.327 (0.0085 - 0.0129)
Outer gear to crescent clearance	0.21 - 0.32 (0.0083 - 0.0126)
Body to inner gear clearance	0.05 - 0.09 (0.0020 - 0.0035)
Body to outer gear clearance	0.05 - 0.11 (0.0020 - 0.0043)
Inner gear to brazed portion of housing clearance	0.045 - 0.091 (0.0018 - 0.0036)

Engine Cooling System (GA)

Thermostat

		Standard
Valve opening temperature	°C (°F)	76.5 (170)
Valve lift	mm/°C (in/°F)	More than 8/90 (0.31/194)

Radiator

Unit: kPa (bar, kg/cm^2, psi)

Cap relief pressure	Standard	78 - 98 (0.78 - 0.98, 0.8 - 1.0, 11 - 14)
	Limit	59 - 98 (0.59 - 0.98, 0.6 - 1.0, 9 - 14)
Leakage test pressure		157 (1.57, 1.6, 23)

Engine Lubrication System (SR)

Oil pressure check

Engine speed rpm	Approximate discharge pressure kPa (bar, kg/cm^2, psi)
Idle speed	More than 78 (0.78, 0.8, 11)
3,200	314 - 392 (3.14 - 3.92, 3.2 - 4.0, 46 - 57)

Oil pump inspection

Unit: mm (in)

Body to outer gear clearance	0.114 - 0.200 (0.0045 - 0.0079)
Inner gear to outer gear tip clearance	Below 0.18 (0.0071)
Body to inner gear clearance	0.05 - 0.09 (0.0020 - 0.0035)
Body to outer gear clearance	0.05 - 0.11 (0.0020 - 0.0043)
Inner gear to brazed portion of housing clearance	0.045 - 0.091 (0.0018 - 0.0036)

Regulator valve inspection

Unit: mm (in)

Regulator valve to oil pump cover clearance	0.040 - 0.097 (0.0016 - 0.0038)

Engine Cooling System (SR)

Thermostat

Valve opening temperature	°C (°F)	76.5 (170)
Valve lift	mm/°C (in/°F)	More than 8/90 (0.31/194)

Radiator

Unit: kPa (bar, kg/cm^2, psi)

Cap relief pressure	Standard	78 - 98 (0.78 - 0.98, 0.8 - 1.0, 11 - 14)
	Limit	59 - 98 (0.59 - 0.98, 0.6 - 1.0, 9 - 14)
Leakage test pressure		157 (1.57, 1.6, 23)

Simpo PDF Merge and Split Unregistered Version - http://www.simpopdf.com

Engine Lubrication System

Oil pressure check

Engine rpm	Approximate discharge pressure kPa (bar, kg/cm^2, psi)
Idle speed	More than 59 (0.59, 0.6, 9)
2,000	294 (2.9, 3, 43)

Oil pump inspection

Unit: mm (in)

Body to outer gear clearance	0.12 - 0.20 (0.0047 - 0.0079)
Outer gear to inner gear clearance	Less than 0.18 (0.0071)
Housing to inner gear clearance	0.05 - 0.09 (0.0020 - 0.0035)
Housing to outer gear clearance	0.05 - 0.11 (0.0020 - 0.0043)
Inner gear to housing clearance	0.05 - 0.09 (0.0020 - 0.0035)

LC

Engine Cooling System

Thermostat

Valve opening temperature °C (°F)	88 (190)
Valve lift mm/°C (in/°F)	More than 10/100 (0.39/212)

Radiator

Unit: kPa (bar, kg/cm^2, psi)

Cap relief pressure	Standard	78 - 98 (0.78 - 0.98, 0.8 - 1.0, 11 - 14)
	Limit	59 - 98 (0.59 - 0.98, 0.6 - 1.0, 9 - 14)
Leakage test pressure		157 (1.57, 1.6, 23)

Simpo PDF Merge and Split Unregistered Version - http://www.simpopdf.com

SECTION **MA**

CONTENTS

PRECAUTIONS AND PREPARATION 3
Supplemental Restraint System (SRS) "AIR BAG" (Dual Air Bag System) 3
Supplemental Restraint System (SRS) "AIR BAG" (Single Air Bag System) 3
Special Service Tools 4
Commercial Service Tool 4
PRE-DELIVERY INSPECTION ITEMS 5
GENERAL MAINTENANCE 6
PERIODIC MAINTENANCE (Except for Europe) 7
Engine and Emission Control Service 7
Chassis and Body Service 8
Maintenance Under Severe Driving Conditions 9
PERIODIC MAINTENANCE (For Europe) 10
Engine Oil & Minor Service 10
Engine and Emission Control Service 11
Chassis and Body Services 12
Maintenance Under Severe Driving Conditions 13
RECOMMENDED LUBRICANTS AND FLUIDS 14
Lubricants and Fluids 14
SAE Viscosity Number 15
Anti-freeze Coolant Mixture Ratio 16

GA

ENGINE MAINTENANCE 17
Checking Drive Belts 17
Changing Engine Coolant 19
Checking Cooling System 21
Checking Fuel Lines 22
Changing Fuel Filter 22
Cleaning and Changing Air Cleaner Filter 23
Changing Engine Oil 24
Changing Oil Filter 24
Checking and Changing Spark Plugs 25
Checking Ignition Wires 26
Changing Positive Crankcase Ventilation (PCV) Filter 26
Checking EVAP Vapor Lines 26
Checking Oxygen Sensor (O2S) or Heated Oxygen Sensor (HO2S) 27

SR

ENGINE MAINTENANCE 28
Checking Drive Belts 28
Changing Engine Coolant 29
Checking Cooling System 31
Checking Fuel Lines 32
Changing Fuel Filter 32
Changing Air Cleaner Filter 33
Changing Engine Oil 33
Changing Oil Filter 34
Changing Spark Plugs (Platinum-tipped type) 34
Checking Ignition Wires 35
Checking EVAP Vapor & Purge Lines 36
Checking Heated Oxygen Sensor (HO2S) 37

CD

ENGINE MAINTENANCE 38
Manifold Nut Check 38
Checking Drive Belt 38
Changing Engine Coolant 38
Checking Cooling System 40
Checking Fuel Line 40
Changing Air Cleaner Filter 41
Water Draining, Fuel Filter Check and Replacement 41
Changing Engine Oil 41
Changing Engine Oil Filter 42
Checking Injection Nozzle 43
Checking Idle Speed 44
Replacing Timing Belt 44

Simpo PDF Merge and Split Unregistered Version - http://www.simpopdf.com

CONTENTS (Cont'd.)

CHASSIS AND BODY MAINTENANCE 45
Checking Exhaust System 45
Checking Clutch Fluid Level and Leaks 45
Checking Clutch System 45
Checking M/T Oil 45
Changing M/T Oil 46
Checking A/T Fluid Level 46
Changing A/T Fluid 47
Checking Brake Fluid Level and Leaks 47
Checking Brake System 47
Changing Brake Fluid 47
Checking Brake Booster, Vacuum Hoses, Connections and Check Valve 48
Checking Disc Brake 48
Checking Drum Brake 49
Balancing Wheels 49
Tire Rotation 50
Checking Steering Gear and Linkage 50
Checking Power Steering Fluid and Lines 50
Lubricating Locks, Hinges and Hood Latches 51
Checking Seat Belts, Buckles, Retractors, Anchors and Adjusters 51
Checking Body Corrosion 52

GA

SERVICE DATA AND SPECIFICATIONS (SDS) 53
Engine Maintenance 53

SR

SERVICE DATA AND SPECIFICATIONS (SDS) 54
Engine Maintenance 54

CD

SERVICE DATA AND SPECIFICATIONS (SDS) 55
Engine Maintenance 55

SERVICE DATA AND SPECIFICATIONS (SDS) 56
Chassis and Body Maintenance 56

Simpo PDF Merge and Split Unregistered Version - http://www.simpopdf.com

Supplemental Restraint System (SRS) "AIR BAG" (Dual Air Bag System)

The Supplemental Restraint System "Air Bag", used along with a seat belt, helps to reduce the risk or severity of injury to the driver and front passenger in a frontal collision. The Supplemental Restraint System consists of air bag modules (located in the center of the steering wheel and on the instrument panel on the passenger side), a diagnosis sensor unit, warning lamp, wiring harness and spiral cable. Information necessary to service the system safely is included in the **RS section** of this Service Manual.

WARNING:

- **To avoid rendering the SRS inoperative, which could increase the risk of personal injury or death in the event of a collision which would result in air bag inflation, all maintenance must be performed by an authorized NISSAN dealer.**
- **Improper maintenance, including incorrect removal and installation of the SRS, can lead to personal injury caused by unintentional activation of the system.**
- **Do not use electrical test equipment on any circuit related to the SRS unless instructed to in this Service Manual. SRS wiring harnesses are covered with yellow insulation either just before the harness connectors or for the complete harness, for easy identification.**

Supplemental Restraint System (SRS) "AIR BAG" (Single Air Bag System)

The Supplemental Restraint System "Air Bag", used along with a seat belt, helps to reduce the risk or severity of injury to the driver in a frontal collision. The Supplemental Restraint System consists of an air bag module (located in the center of the steering wheel), a diagnosis sensor unit, warning lamp, wiring harness and spiral cable. Information necessary to service the system safely is included in the **RS section** of this Service Manual.

WARNING:

- **To avoid rendering the SRS inoperative, which could increase the risk of personal injury or death in the event of a collision which would result in air bag inflation, all maintenance must be performed by an authorized NISSAN dealer.**
- **Improper maintenance, including incorrect removal and installation of the SRS, can lead to personal injury caused by unintentional activation of the system.**
- **Do not use electrical test equipment on any circuit related to the SRS.**

Simpo PDF Merge and Split Unregistered Version - http://www.simpopdf.com

Special Service Tools

The actual shapes of Kent-Moore tools may differ from those of special service tools illustrated here.

Tool number Tool name	Description	Engine application		
		GA	SR	CD
KV10115801 KV10115800 (Kent-Moore Europe make) Oil filter wrench	Removing oil filter 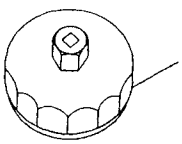 14 faces, Inner span: 64.3 mm (2.531 in) (Face to opposite face) NT362	—	X	—
KV10105900 Oil filter cap wrench	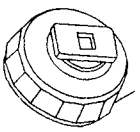 15 faces, Inner span: 80 mm (3.15 in) (Face to opposite corner) NT555	X	—	X
KV11102600 Lifter plate replacer	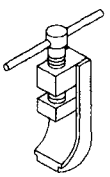 NT556	—	—	X
EG17650301 Radiator cap tester adapter	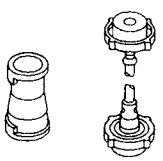 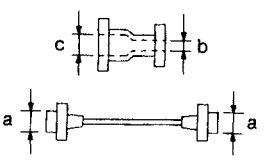 **a: 28 (1.10) dia.** **b: 31.4 (1.236) dia.** **c: 41.3 (1.626) dia.** Unit: mm (in) NT564	X	X	X

Commercial Service Tool

Tool name	Description	Engine application		
		GA	SR	CD
Spark plug wrench	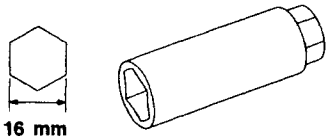 **16 mm (0.63 in)** Wrench with a magnet to hold spark plug NT047	X	X	—

Simpo PDF Merge and Split Unregistered Version - http://www.simpopdf.com

Shown below are Pre-delivery Inspection Items required for the new vehicle. It is recommended that necessary items other than those listed here be added, paying due regard to the conditions in each country.

Perform applicable items on each model. Consult text of this section for specifications.

UNDER HOOD — engine off

- ☐ Radiator coolant level and coolant hose connections for leaks
- ☐ Battery fluid level, specific gravity and conditions of battery terminals
- ☐ Drive belts tension
- ☐ Fuel filter for water or dusts, and fuel lines and connections for leaks
- ☐ Engine oil level and oil leaks
- ☐ Clutch and brake reservoir fluid level and fluid lines for leaks
- ☐ Windshield and rear window washer and headlamp cleaner reservoir fluid level
- ☐ Power steering reservoir fluid level and hose connections for leaks

ON INSIDE AND OUTSIDE

- ☐ Remove front spring/strut spacer (If applicable)
- ☐ Operation of all instruments, gauges, lights and accessories
- ☐ Operation of horn(s), wiper and washer
- ☐ Steering lock for operation
- ☐ Check air conditioner for gas leaks
- ☐ Front and rear seats, and seat belts for operation
- ☐ All moldings, trims and fittings for fit and alignment
- ☐ All windows for operation and alignment
- ☐ Hood, trunk lid, door panels for fit and alignment
- ☐ Latches, keys and locks for operation
- ☐ Weatherstrips for adhesion and fit
- ☐ Headlamp aiming
- ☐ Tighten wheel nuts (Inc. inner nuts if applicable)
- ☐ Tire pressure (Inc. spare tire)
- ☐ Check front wheels for toe-in
- ☐ Install clock/voltmeter/room lamp fuse (If applicable)
- ☒ Install deodorizing filter to air purifier (If applicable)
- ☒ Remove wiper blade protectors (If applicable)

UNDER BODY

- ☐ Manual transmission/transaxle, transfer and differential gear oil level
- ☐ Brake and fuel lines and oil/fluid reservoirs for leaks
- ☐ Tighten bolts and nuts of steering linkage and gear box, suspension, propeller shafts and drive shafts
- ☒ Tighten rear body bolts and nuts (Models with wooden bed only)

ROAD TEST

- ☐ Clutch operation
- ☐ Parking brake operation
- ☐ Service brake operation
- ☐ Automatic transmission/transaxle shift timing and kickdown
- ☐ Steering control and returnability
- ☐ Engine performance
- ☐ Squeaks and rattles

ENGINE OPERATING AND HOT

- ☐ Adjust idle mixture and speed (and ignition timing*1)
- ☐ Automatic transmission/transaxle fluid level
- ☒ Engine idling and stop knob operation (Diesel only)

FINAL INSPECTION

- ☐ Install necessary parts (outside mirror, wheel covers, seat belts, mat, carpet or mud flaps)
- ☐ Inspect for interior and exterior metal and paint damage
- ☐ Check for spare tire, jack, tools (wheel chock), and literature
- ☐ Wash, clean interior and exterior

*1: Not required on models with a direct ignition system

☒ : Not applicable to this model.

Simpo PDF Merge and Split Unregistered Version - http://www.simpopdf.com

General maintenance includes those items which should be checked during the normal day-to-day operation of the vehicle. They are essential if the vehicle is to continue operating properly. The owners can perform the checks and inspections themselves or they can have their NISSAN dealers do them.

Item	Reference pages
OUTSIDE THE VEHICLE The maintenance items listed here should be performed from time to time, unless otherwise specified.	
Tires Check the pressure with a gauge periodically when at a service station, including the spare, and adjust to the specified pressure if necessary. Check carefully for damage, cuts or excessive wear.	—
Windshield wiper blades Check for cracks or wear if they do not wipe properly.	—
Doors and engine hood Check that all doors , the engine hood, the trunk lid and back door operate properly. Also ensure that all latches lock securely. Lubricate hinges, latches, rollers and links if necessary. Make sure that the secondary latch keeps the hood from opening when the primary latch is released. When driving in areas using road salt or other corrosive materials, check for lubrication frequently.	MA-51
Tire rotation Tires should be rotated every 10,000 km (6,000 miles).	MA-50
INSIDE THE VEHICLE The maintenance items listed here should be checked on a regular basis, such as when performing periodic maintenance, cleaning the vehicle, etc.	
Lights Make sure that the headlights, stop lights, tail lights, turn signal lights, and other lights are all operating properly and installed securely. Also check headlight aim.	—
Warning lights and buzzers/chimes Make sure that all warning lights and buzzers/chimes are operating properly.	—
Steering wheel Check for change in the steering conditions, such as excessive free play, hard steering or strange noises. **Free play: Less than 35 mm (1.38 in)**	—
Seat belts Check that all parts of the seat belt system (e.g. buckles, anchors, adjusters and retractors) operate properly and smoothly, and are installed securely. Check the belt webbing for cuts, fraying, wear or damage.	
UNDER THE HOOD AND VEHICLE The maintenance items listed here should be checked periodically e.g. each time you check the engine oil or refuel.	
Windshield washer fluid Check that there is adequate fluid in the tank.	—
Engine coolant level Check the coolant level when the engine is cold.	MA-19, 38
Engine oil level Check the level after parking the vehicle on a level spot and turning off the engine.	MA-24, 33, 41
Brake and clutch fluid levels Make sure that the brake and clutch fluid levels are between the "MAX" and "MIN" lines on the reservoir.	MA-45, 47
Battery Check the fluid level in each cell. It should be between the "MAX" and "MIN" lines.	—

Simpo PDF Merge and Split Unregistered Version - http://www.simpopdf.com

The following tables show the normal maintenance schedule. Depending upon weather and atmospheric conditions, varying road surfaces, individual driving habits and vehicle usage, additional or more frequent maintenance may be required.

Periodic maintenance beyond the last period shown on the tables requires similar maintenance.

Engine and Emission Control Service

Abbreviations: I = Inspect and correct or replace as necessary, R = Replace, A = Adjust, C = Clean.

MAINTENANCE OPERATION		MAINTENANCE INTERVAL								Reference page	
Perform either at number of kilometers (miles) or months, whichever comes first.	km x 1,000 (Miles x 1,000) Months	10 (6) 6	20 (12) 12	30 (18) 18	40 (24) 24	50 (30) 30	60 (36) 36	70 (42) 42	80 (48) 48		
Underhood and under vehicle										GA	SR
Intake & exhaust valve clearance (GA15DE & GA16DE engines)	See NOTE (1)									EM	41	—
Drive belts					I				I	MA	17	24
Engine anti-freeze coolant (Ethylene glycol base) (LLC)					R				R	MA	19	29
Engine coolant (Soft water)		R	R	R	R	R	R	R	R	MA	19	29
Cooling system			I		I		I		I	MA	21	31
Fuel lines					I				I	MA	22	32
Air cleaner filter (Dry paper type)★		C	C	C	R	C	C	C	R	MA	23	—
Air cleaner filter (Viscous paper type)★					R				R	MA	23	33
Engine oil (Use API SE, SF, SG or SH oil.)★		R	R	R	R	R	R	R	R	MA	24	33
Engine oil filter★		R	R	R	R	R	R	R	R	MA	24	33
Fuel filter★					R				R	MA	22	32
Spark plugs (except Platinum-tipped type)					R				R	MA	25	—
Spark plugs (Platinum-tipped type)		Replace every 100,000 km (60,000 miles).								MA	—	34
Ignition wires					I				I	MA	26	35
PCV filter★					R				R	MA	26	—
Vapor lines					I				I	MA	26	36
(Heated) Oxygen Sensor					I				I	MA	27	37

NOTE: (1) If valve noise increases, check valve clearance.

★ Maintenance items with "★" should be performed more frequently according to "Maintenance under severe driving conditions".

Simpo PDF Merge and Split Unregistered Version - http://www.simpopdf.com

Chassis and Body Service

Abbreviations: I = Inspect and correct or replace as necessary, R = Replace, L = Lubricate.

MAINTENANCE OPERATION	MAINTENANCE INTERVAL										
Perform either at number of kilometers (miles) or months, whichever comes first.	km x 1,000	1	10	20	30	40	50	60	70	80	Reference page
	(Miles x 1,000)	(0.6)	(6)	(12)	(18)	(24)	(30)	(36)	(42)	(48)	
	Months	—	6	12	18	24	30	36	42	48	
Underhood and under vehicle											
Brake, clutch & automatic transaxle fluid or oil (For level & leaks)★			I	I	I	I	I	I	I	I	MA-47, 45, 46
Brake fluid★						R				R	MA-47
Brake booster vacuum hoses, connections & check valve						I				I	MA-48
Power steering fluid & lines (For level & leaks)			I*	I	I*	I	I*	I	I*	I	MA-50
Brake, clutch & exhaust systems			I	I	I	I	I	I	I	I	MA-47, 45
Manual transaxle oil (For level & leaks)★			I*	I	I*	I	I*	I	I*	I	MA-45
Steering gear & linkage, axle & suspension parts & drive shafts★		I*		I		I		I		I	MA-50 FA-5 RA-4
Outside and inside											
Wheel alignment, if necessary, rotate & balance wheels				I		I		I		I	MA-49 FA-6
Brake pads, disc & other brake components★			I	I	I	I	I	I	I	I	MA-48
Brake linings, drums & other brake components				I		I		I		I	MA-49
Locks, hinges & hood latch★			L*	L	L*	L	L*	L	L*	L	MA-51
Seat belts, buckles, retractors, anchors & adjuster				I		I		I		I	MA-51
Foot brake, parking brake & clutch (For free play, stroke & operation)			I*	I	I*	I	I*	I	I*	I	BR-11, 37 CL-5
Air bag system	See NOTE (1)										RS-11

NOTE: (1) Inspect at the first 10 years, and then every 2 years.

★ Maintenance items with "★" should be performed more frequently according to "Maintenance Under Severe Driving Conditions".

*: Except for Australia models

Simpo PDF Merge and Split Unregistered Version - http://www.simpopdf.com

Maintenance Under Severe Driving Conditions

The maintenance intervals shown on the preceding pages are for normal operating conditions. If the vehicle is mainly operated under severe driving conditions as shown below, more frequent maintenance must be performed on the following items as shown in the table.

SEVERE DRIVING CONDITIONS

A — Driving under dusty conditions
B — Driving repeatedly short distances
C — Towing a trailer or caravan
D — Extensive idling
E — Driving in extremely adverse weather conditions or in areas where ambient temperatures are either extremely low or extremely high
F — Driving in high humidity areas or in mountainous areas
G — Driving in areas using salt or other corrosive materials
H — Driving on rough and/or muddy roads or in the desert
I — Driving with frequent use of braking or in mountainous areas

Driving condition	Maintenance item	Maintenance operation	Maintenance interval	Reference page		
					GA	SR
A	Air cleaner filter					
	Dry paper type	Clean	More frequently	MA	23	—
	All types	Replace		MA	23	33
	PCV filter	Replace		MA	26	—
A B C D	Engine oil & oil filter	Replace	Every 5,000 km (3,000 miles) or 3 months	MA	24	24
A . . . E	Fuel filter	Replace	Every 20,000 km (12,000 miles) or 12 months	MA	22	32
. . . . . F . . .	Brake fluid	Replace		MA-47		
. . C . . . . H .	Automatic & manual transaxle oil	Replace	Every 40,000 km (24,000 miles) or 24 months	MA-46, 45		
. . . . . G H .	Steering gear & linkage, axle & suspension parts & drive shafts	Check	Every 10,000 km (6,000 miles) or 6 months	MA-50 FA-5, 7 RA-4		
A . C . . . G H I	Brake pads, discs & other brake components	Check	Every 5,000 km (3,000 miles) or 3 months	MA-48		
A . C . . . G H I	Brake linings, drums & other brake components	Check	Every 10,000 km (6,000 miles) or 6 months	MA-49		
. . . . . G . .	Lock, hinges & hood latch	Lubricate	Every 5,000 km (3,000 miles) or 3 months	MA-51		

Maintenance operation: Check = Check. Correct or replace if necessary.

Simpo PDF Merge and Split Unregistered Version - http://www.simpopdf.com

The following tables show the normal maintenance schedule. Depending upon weather and atmospheric conditions, varying road surfaces, individual driving habits and vehicle usage, additional or more frequent maintenance may be required.

Periodic maintenance beyond the last period shown on the tables requires similar maintenance.

Engine Oil & Minor Service

GASOLINE ENGINE

Abbreviation: R = Replace.

MAINTENANCE OPERATION		MAINTENANCE INTERVAL								
Perform either at number of kilometers (miles) or months, whichever comes first.	km x 1,000	15	30	45	60	75	90	105	120	Reference page
	(Miles x 1,000)	(9)	(18)	(27)	(36)	(45)	(54)	(63)	(72)	
	Months	12	24	36	48	60	72	84	96	
Underhood and under vehicle										
Engine oil (API SG or SH oil)★		R	R	R	R	R	R	R	R	MA-24
Engine oil filter★		R	R	R	R	R	R	R	R	MA-24

DIESEL ENGINE

Abbreviations: R = Replace, I = Inspect and correct or replace as necessary

MAINTENANCE OPERATION										
Perform either at number of kilometers (miles) or months, whichever comes first.	km x 1,000	10	20	30	40	50	60	70	80	Reference page
	(Miles x 1,000)	(6)	(12)	(18)	(24)	(30)	(36)	(42)	(48)	
	Months	6	12	18	24	30	36	42	48	
Underhood and under vehicle										
Engine oil (Use API CD oil)★		R	R	R	R	R	R	R	R	MA-41
Engine oil filter★		R	R	R	R	R	R	R	R	MA-41
Drive belts		I	I		I		I		I	MA-38
Idle speed			I		I		I		I	MA-44

NOTE: ★ Maintenance items with "★" should be performed more frequently according to "Maintenance Under Severe Driving Conditions".

Simpo PDF Merge and Split Unregistered Version - http://www.simpopdf.com

Engine and Emission Control Service

Abbreviations: I = Inspect and correct or replace as necessary, R = Replace.

MAINTENANCE OPERATION		MAINTENANCE INTERVAL				Reference page	
Perform either at number of kilometers (miles) or months, whichever comes first.	km x 1,000	30	60	90	120		
	(Miles x 1,000)	(18)	(36)	(54)	(72)		
	Months	12	24	36	48		
Underhood and under vehicle						GA	CD
Engine anti-freeze coolant (Ethylene glycol base) (LLC)	See NOTE (1)			R		MA-19	MA-38
Cooling system		I	I	I	I	MA-21	MA-40
Fuel lines			I		I	MA-22	MA-40
Air cleaner filter (Viscous paper type)★			R		R	MA-23	MA-41
GASOLINE ENGINE — Intake & exhaust valve clearance	See NOTE (2)					EM-41	—
GASOLINE ENGINE — Drive belts	See NOTE (3)		I	I	I	MA-17, 18	—
GASOLINE ENGINE — Fuel filter★				R		MA-22	—
GASOLINE ENGINE — Spark plugs	See NOTE (4)	R	R	R	R	MA-25	—
GASOLINE ENGINE — Ignition wires*				I		MA-26	—
GASOLINE ENGINE — PCV filter★			R		R	MA-26	—
GASOLINE ENGINE — Vapor lines (Hoses, connections, etc.)	See NOTE (5)		I		I	MA-26	—
GASOLINE ENGINE — (Heated) oxygen sensor*			I		I	MA-27	—
DIESEL ENGINE — Fuel filter			R		R	—	MA-41
DIESEL ENGINE — Nozzles	See NOTE (6)					—	MA-43
DIESEL ENGINE — Timing belts for camshaft and injection pump		Replace every 90,000 km (54,000 miles)				—	EM-120, 124

*: Except for Swedish models

NOTE: (1) Replace at the first 90,000 km (54,000 miles) or 60 months, then every 60,000 km (36,000 miles) or 24 months, whichever comes first.
(2) If valve noise increases, check valve clearance.
(3) After 60,000 km (36,000 miles) or 24 months, inspect every 30,000 km (18,000 miles) or 12 months, whichever comes first.
(4) For Swedish models, perform at mileage interval only.
(5) For Swedish models, inspect at the first 90,000 km (54,000 miles), and then every 60,000 km (36,000 miles) or 24 months, whichever comes first.
(6) If engine power decreases, black smoke is emitted or engine noise increases, check and, if necessary, adjust the fuel injection nozzle's starting pressure and the fuel spray pattern.
★ Maintenance items with "★" should be performed more frequently according to "Maintenance Under Severe Driving Conditions".

Simpo PDF Merge and Split Unregistered Version - http://www.simpopdf.com

Chassis and Body Services

Abbreviations: R = Replace. I = Inspect, and correct or replace as necessary.

MAINTENANCE OPERATION		MAINTENANCE INTERVAL				Reference page
Perform either at number of kilometers (miles) or months, whichever comes first.	km x 1,000	30	60	90	120	
	(Miles x 1,000)	(18)	(36)	(54)	(72)	
	Months	12	24	36	48	
CHASSIS AND BODY	**Underhood and under vehicle**					
Brake & clutch oil (For level & leaks)★		I	I	I	I	MA-47, 45
Automatic transaxle fluid (For level & leaks)★		I	I	I	I	MA-46
Brake fluid★			R		R	MA-47
Brake booster vacuum hoses, connections & check valve			I		I	MA-48
Power steering fluid & lines (For level & leaks)		I	I	I	I	MA-50
Brake & clutch systems		I	I	I	I	MA-47, 45
Manual transaxle oil (For leaks)★		I	I	I	I	MA-45
Steering gear & linkage, axle & suspension parts & exhaust system★			I		I	MA-50, 45, FA-5, RA-4
Drive shafts★		I	I	I	I	FA-7
	Outside and Inside					
Wheel alignment (If necessary, rotate & balance wheels)		I	I	I	I	MA-49, FA-6
Brake pads, disc & other brake components★		I	I	I	I	MA-48
Brake linings, drums & other components★		I	I	I	I	MA-49
Headlamp aiming		I	I	I	I	EL-75
Foot brake, parking brake & clutch (For free play, stroke & operation)		I	I	I	I	BR-11, 37, CL-5
Body corrosion			Annually			MA-52
Air bag system			See NOTE (1)			RS-11

NOTE: ★ Maintenance items with "★" should be performed more frequently according to "Maintenance under severe driving conditions".
(1) Inspect at the first 10 years and then every 2 years.

Simpo PDF Merge and Split Unregistered Version - http://www.simpopdf.com

Maintenance Under Severe Driving Conditions

The maintenance intervals shown on the preceding pages are for normal operating conditions. If the vehicle is mainly operated under severe driving conditions as shown below, more frequent maintenance must be performed on the following items as shown in the table.

SEVERE DRIVING CONDITIONS

A — Driving under dusty conditions
B — Driving repeatedly short distances
C — Towing a trailer
D — Extensive idling
E — Driving in extremely adverse weather conditions or in areas where ambient temperatures are either extremely low or extremely high
F — Driving in high humidity areas or in mountainous areas
G — Driving in areas using salt or other corrosive materials
H — Driving on rough and/or muddy roads or in the desert
I — Driving with frequent use of braking or in mountainous areas

Driving condition	Maintenance item	Maintenance operation	Maintenance interval	Reference page
A B C D	Engine oil & oil filter			
	Gasoline engine	Replace	Every 7,500 km (4,500 miles) or 6 months	MA-24
	Diesel engine	Replace	Every 5,000 km (3,000 miles) or 3 months	MA-41
A	Air cleaner filter & PCV filter	Replace	Every 30,000 km (18,000 miles) or 12 months	MA-23, 41
A E	Fuel filter	Replace		MA-22, 41
F	Brake fluid	Replace		MA-47
G H	Steering gear & linkage, axle & suspension parts & exhaust system	Check		MA-50, 45 FA-5 RA-4
C H	Automatic & manual transaxle oil	Replace	Every 60,000 km (36,000 miles) or 24 months	MA-46, 45
A C G H I	Brake pads, discs & other brake components	Check	Every 15,000 km (9,000 miles) or 6 months	MA-48
A C G H I	Brake lining, drums & other brake components	Check		MA-49
C H	Drive shaft	Check		FA-7

Maintenance operation: Check = Check. Correct or replace if necessary.

Simpo PDF Merge and Split Unregistered Version - http://www.simpopdf.com

Lubricants and Fluids

		Capacity (Approximate)		Recommended lubricants and fluids
		Liter	Imp measure	
Engine oil (Refill)				
Gasoline				
With oil filter	GA	3.2	2-7/8 qt	For Europe: API SG or SH*1 Except for Europe: API SE, SF, SG or SH*1
	SR20DE	3.4	3 qt	
Without oil filter	GA	2.8	2-1/2 qt	
	SR20DE	3.2	2-7/8 qt	
Diesel				
With oil filter	CD20	5.1	4-1/2 qt	API CD*1
Without oil filter	CD20	4.6	4 qt	
Cooling system (With reservoir tank)				
Gasoline				
With heater	GA series (M/T)	5.9	5-1/4 qt	Anti-freeze coolant (Ethylene glycol base) or soft water
	GA series (A/T)	6.4	5-5/8 qt	
	SR series (M/T)	6.1	5-3/8 qt	
	SR series (A/T)	6.6	5-7/8 qt	
Without heater	GA series (M/T)	5.6	4-7/8 qt	
	GA series (A/T)	6.1	5-3/8 qt	
	SR series (M/T)	5.8	5-1/8 qt	
	SR series (A/T)	6.3	5-1/2 qt	
Diesel				
With heater	CD20	5.2	4-5/8 qt	
Without heater	CD20	4.9	4-3/8 qt	
Manual transaxle gear oil				
RS5F30A		2.8 - 3.0	4-7/8 - 5-1/4 pt	API GL-4*1
RS5F31A		2.9 - 3.2	5-1/8 - 5-5/8 pt	
RS5F32A		3.7 - 3.9	6-1/2 - 6-7/8 pt	
Automatic transaxle fluid				Genuine NISSAN ATF or equivalent*2
RL4F03A		7.0	6-1/8 qt	
Power steering fluid		—	—	Type DEXRON™
Brake & clutch fluid		—	—	For Europe: DOT3 or DOT4 (US FMVSS NO. 116)*3 Except for Europe: DOT3 (US FMVSS NO. 116)
Multi-purpose grease		—	—	NLGI No. 2 (Lithium soap base)

*1: For further details, see "SAE Viscosity Number".
*2: For more information regarding suitable fluids, contact a NISSAN dealership for correct brand of DEXRON® IIE or DEXRON® III.
*3: Never mix different types of fluids (DOT3 and DOT4).

Simpo PDF Merge and Split Unregistered Version - http://www.simpopdf.com

SAE Viscosity Number

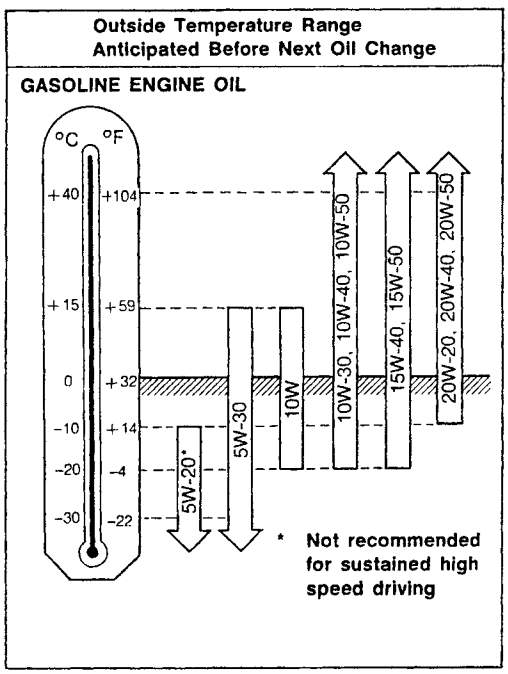

TI0005

- For cold and warm areas:
  10W-30 is preferable for ambient temperatures above –20°C (–4°F).
- For hot areas:
  20W-40 and 20W-50 are suitable.

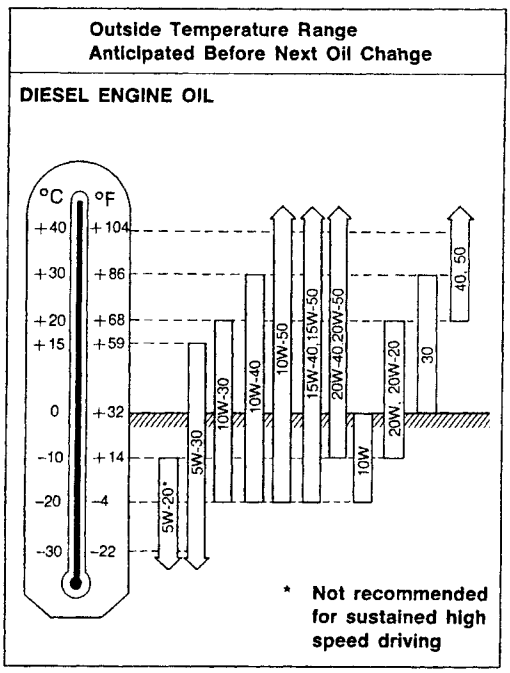

TI0006

- For cold and warm areas:
  10W-30 is preferable for ambient temperatures above –20°C (–4°F).
- For hot areas:
  20W-40 and 20W-50 are suitable.

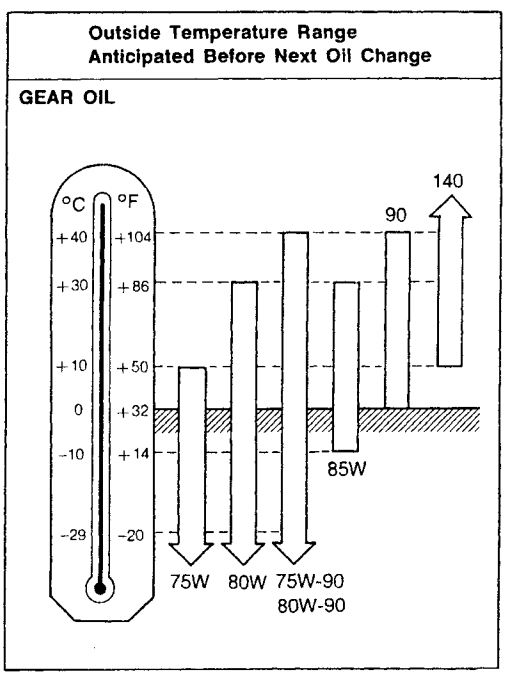

TI0003

- 80W-90 is preferable for ambient temperatures below 40°C (104°F).

Simpo PDF Merge and Split Unregistered Version - http://www.simpopdf.com

Anti-freeze Coolant Mixture Ratio

The engine cooling system is filled at the factory with a high-quality, year-round, anti-freeze coolant solution. The anti-freeze solution contains rust and corrosion inhibitors. Therefore, additional cooling system additives are not necessary.

CAUTION:

When adding or replacing coolant, be sure to use only an ethylene glycol anti-freeze with the proper mixture ratio. See the following examples:

Outside temperature down to		Anti-freeze	Soft water
°C	°F		
–15	5	30%	70%
–35	–30	50%	50%

The use of other types of coolant solutions may damage your cooling system.

Simpo PDF Merge and Split Unregistered Version - http://www.simpopdf.com

Checking Drive Belts

EXCEPT FOR GA14DE ENGINE

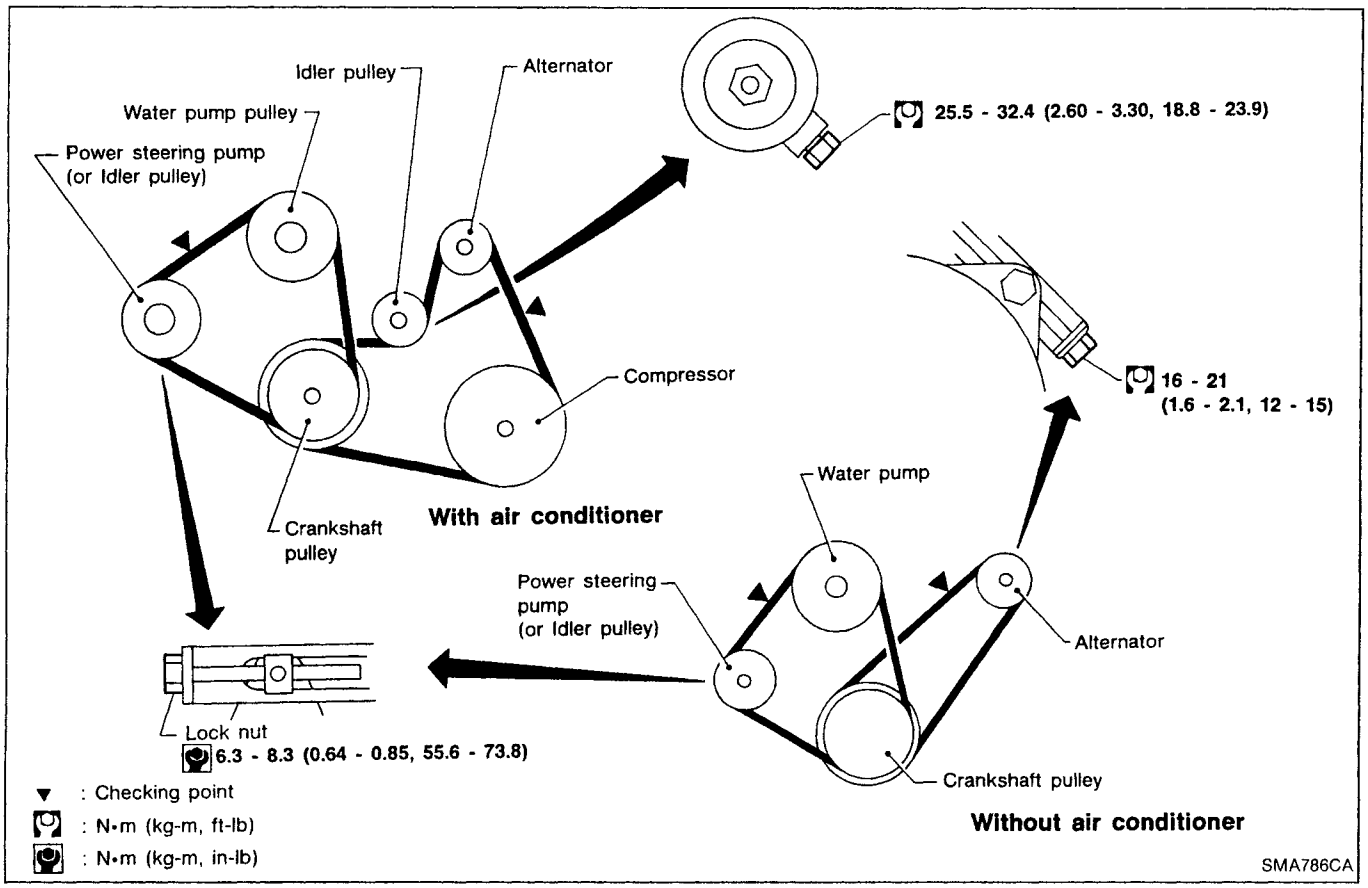

1. Inspect for cracks, fraying, wear or oil adhesion. If necessary, replace with a new one.
2. Inspect drive belt deflections by pushing on the belt midway between pulleys.

Adjust if belt deflections exceed the limit.

Belt deflection:

Unit: mm (in)

	Used belt deflection		Deflection of new belt
	Limit	Deflection after adjustment	
Alternator			
With air conditioner compressor	10 (0.39)	6 - 7 (0.24 - 0.28)	5.5 - 6.5 (0.217 - 0.256)
Without air conditioner compressor	11 (0.43)	7 - 9 (0.28 - 0.35)	6 - 8 (0.24 - 0.31)
Power steering oil pump	7.5 (0.295)	4 - 6 (0.16 - 0.24)	3 - 5 (0.12 - 0.20)
Applied pushing force	98 N (10 kg, 22 lb)		

Inspect drive belt deflections when engine is cold.

Simpo PDF Merge and Split Unregistered Version - http://www.simpopdf.com

Checking Drive Belts (Cont'd)

FOR GA14DE ENGINE

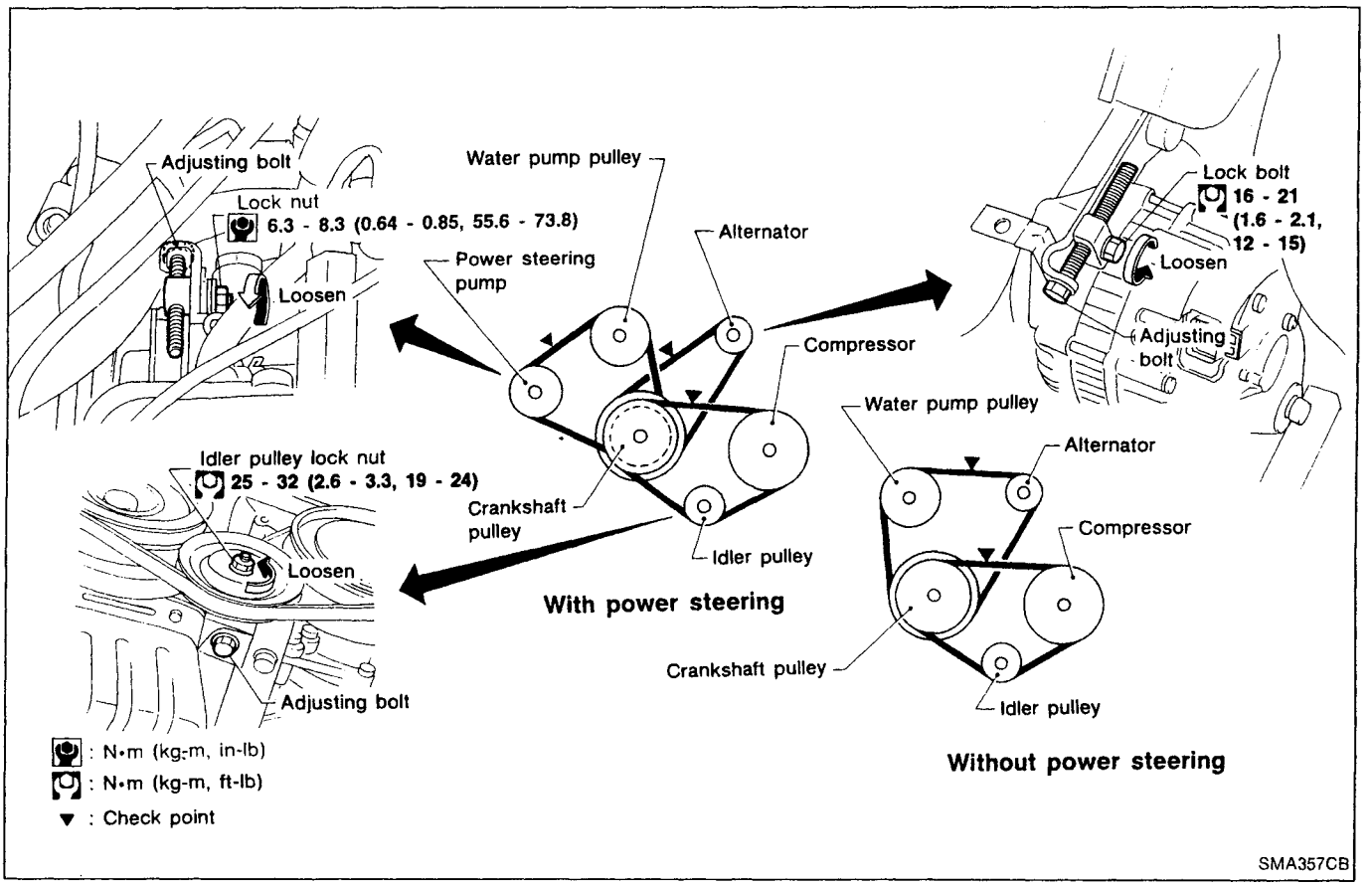

1. Inspect for cracks, fraying, wear or oil adhesion. If necessary, replace with a new one.
2. Inspect drive belt deflections by pushing on the belt midway between pulleys.

Adjust if belt deflections exceed the limit.

Belt deflection:

Unit: mm (in)

	Used belt deflection		Deflection of new belt
	Limit	Deflection after adjustment	
Alternator			
With power steering	11 (0.43)	7 - 9 (0.28 - 0.35)	6 - 8 (0.24 - 0.31)
Without power steering	10 (0.39)		
Air conditioner compressor	9.5 (0.374)	6 - 8 (0.24 - 0.31)	5 - 7 (0.20 - 0.28)
Power steering oil pump	7.5 (0.295)	4 - 6 (0.16 - 0.24)	3 - 5 (0.12 - 0.20)
Applied pushing force	98 N (10 kg, 22 lb)		

Inspect drive belt deflections when engine is cold.

Simpo PDF Merge and Split Unregistered Version - http://www.simpopdf.com

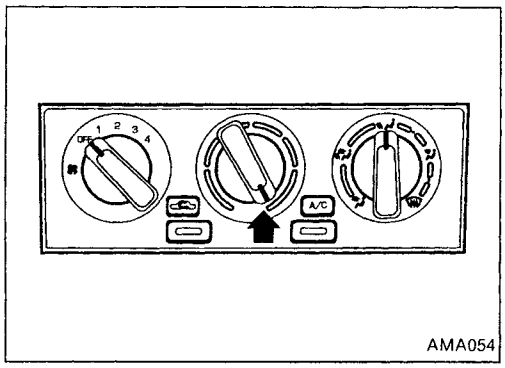
AMA054

Changing Engine Coolant

WARNING:
To avoid being scalded, never change the coolant when the engine is hot.

—DRAINING ENGINE COOLANT—

1. Move heater "TEMP" control lever all the way to "HOT".
   - **Make sure that blower switch is "OFF".**

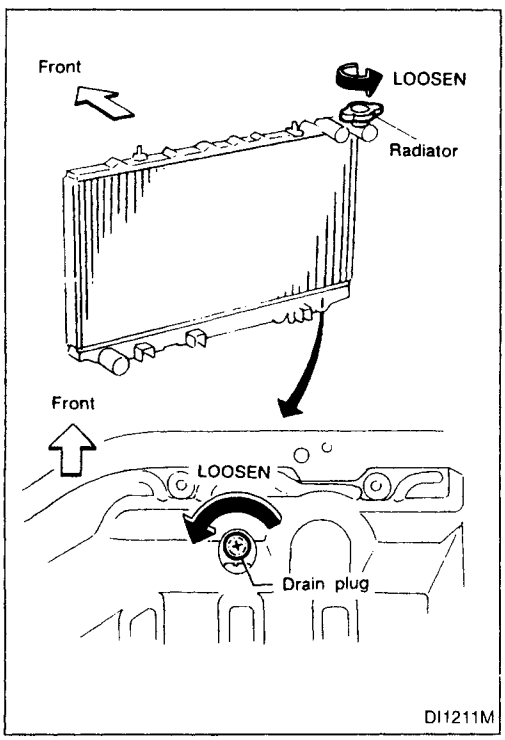

DI1211M

2. Open radiator drain plug at the bottom of radiator, and remove radiator cap.
3. Remove reservoir tank, drain coolant, then clean reservoir tank.
   Install it temporarily.
   - **Be careful not to allow coolant to contact drive belts.**

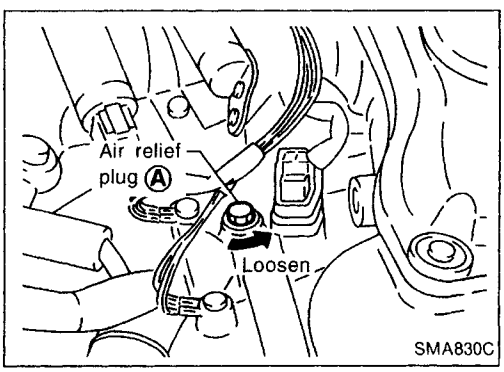

SMA830C

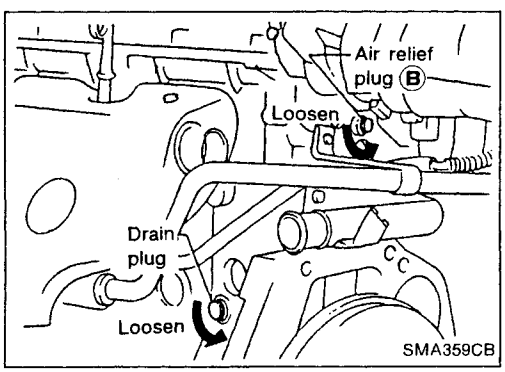

SMA359CB

4. Remove cylinder block drain plug and air relief plug.

—FLUSHING COOLING SYSTEM—

5. Install radiator drain plug, cylinder block drain plug and air relief plug Ⓑ securely.
6. Fill radiator with water until water spills from the air relief plug Ⓐ hole, then install air relief plug Ⓐ.
   Fill radiator and reservoir tank with water and install radiator cap.

Air relief plug:
: 7 - 8 N·m (0.7 - 0.8 kg-m, 61 - 69 in-lb)

Simpo PDF Merge and Split Unregistered Version - http://www.simpopdf.com

Changing Engine Coolant (Cont'd)

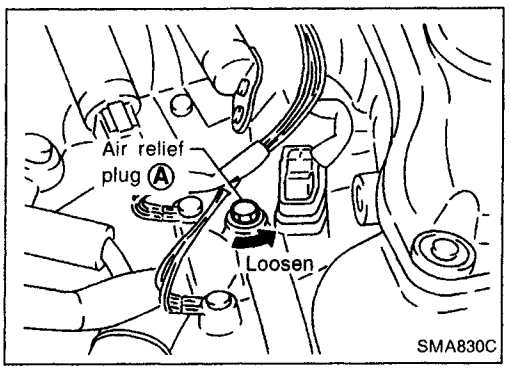

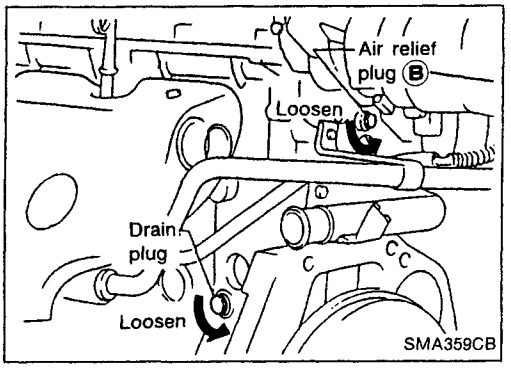

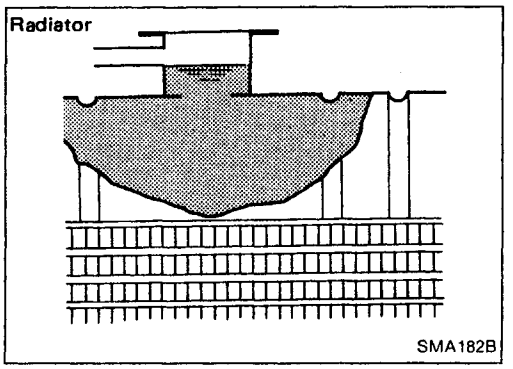

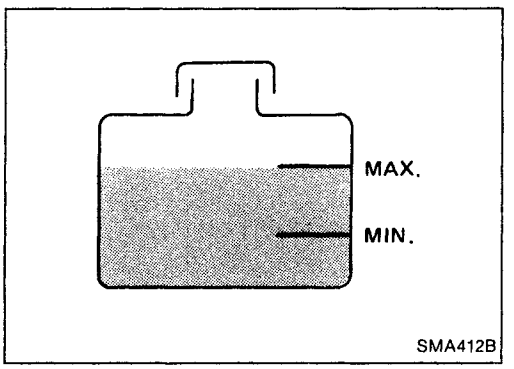

7. Warm up engine until cooling fan operates, then race engine 2 or 3 times under no-load.
8. Stop engine and wait until it cools down.
9. Drain water.
10. Repeat steps 2 through 9 until clear water begins to drain from radiator.

—REFILLING ENGINE COOLANT—

11. Install reservoir tank, radiator drain plug, cylinder block drain plug and air relief plug Ⓑ.

- **Apply sealant to the thread of cylinder block drain plug.**

: 34 - 44 N·m (3.5 - 4.5 kg-m, 25 - 33 ft-lb)

12. Fill radiator with coolant until coolant spills from the air relief plug Ⓐ hole, then install air relief plug Ⓐ.
13. Fill radiator and reservoir tank with coolant up to specified level and install radiator cap.

Air relief plug:
: 7 - 8 N·m (0.7 - 0.8 kg-m, 61 - 69 in-lb)

For coolant mixture ratio, refer to MA-16.

Coolant capacity (With reservoir tank):

Unit: ℓ (Imp qt)

	With heater	Without heater
M/T	5.9 (5-1/4)	5.6 (4-7/8)
A/T	6.4 (5-5/8)	6.1 (5-3/8)

Reservoir tank capacity (for MAX level):
0.7ℓ (5/8 Imp qt)

Pour coolant through coolant filler neck slowly to allow air in system to escape.

14. Warm up engine to normal operating temperature.
15. Run engine at 2,500 rpm for 10 seconds and return to idle speed.

- Repeat 2 or 3 times.

Watch coolant temperature gauge so as not to overheat the engine.

Simpo PDF Merge and Split Unregistered Version - http://www.simpopdf.com

Changing Engine Coolant (Cont'd)

16. Stop engine and cool it down.
- Cool down using a fan to reduce the time.

17. Remove the radiator filler cap and check coolant level.
- If necessary, refill radiator up to filler neck with coolant.

18. Refill reservoir tank to Max line with coolant.
19. Repeat step 14 through step 18 two or more times.
20. Warm up engine, and check for sound of coolant flow while running engine from idle up to 4,000 rpm with heater temperature control set at several positions between COOL and HOT.
- Sound may be noticeable at heater water cock.

21. If sound is heard, bleed air from cooling system by repeating steps 14 through 18 until coolant level no longer drops.
- **Clean excess coolant from engine.**

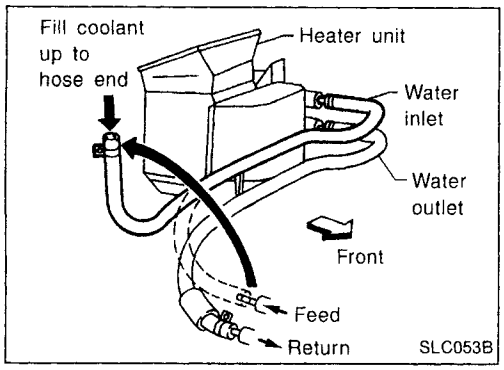

CAUTION:
When heater unit is removed or replaced, refill engine coolant as shown, removing heater hose at feeding connector on engine.

Checking Cooling System

CHECKING HOSES

Check hoses for improper attachment and for leaks, cracks, damage, loose connections, chafing and deterioration.

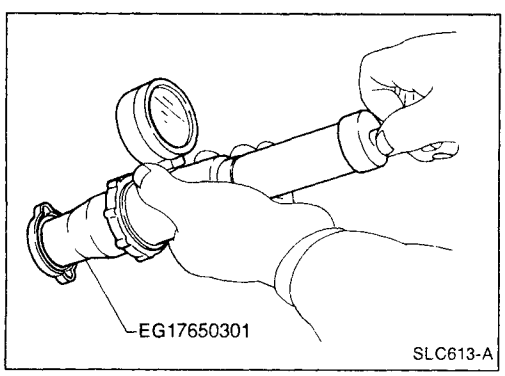

CHECKING RADIATOR CAP

Apply pressure to radiator cap with cap tester to see if it is satisfactory.

Radiator cap relief pressure:
Standard
78 - 98 kPa
(0.78 - 0.98 bar, 0.8 - 1.0 kg/cm^2, 11 - 14 psi)
Limit
59 - 98 kPa
(0.59 - 0.98 bar, 0.6 - 1.0 kg/cm^2, 9 - 14 psi)

Simpo PDF Merge and Split Unregistered Version - http://www.simpopdf.com

Checking Cooling System (Cont'd)

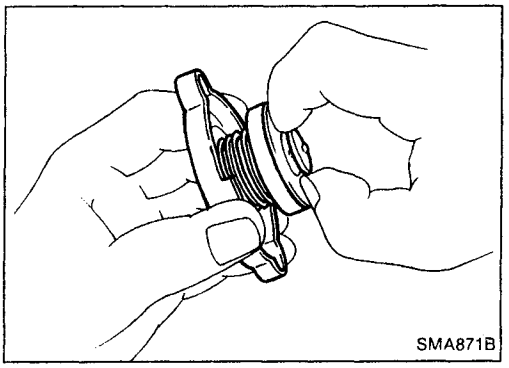
SMA871B

Pull the negative-pressure valve to open it. Check that it closes completely when released.

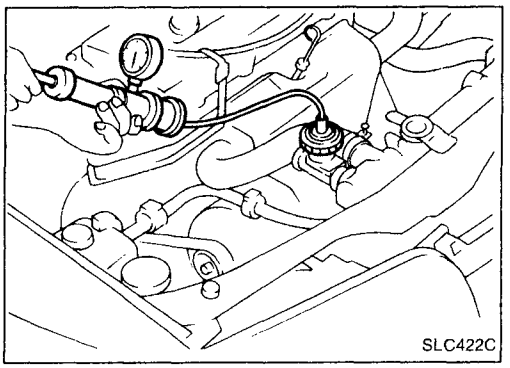
SLC422C

CHECKING COOLING SYSTEM FOR LEAKS

Apply pressure to the cooling system with cap tester to check for leakage.

Testing pressure:
157 kPa (1.57 bar, 1.6 kg/cm^2, 23 psi)

CAUTION:
Higher pressure than the specified value may cause damage to radiator.

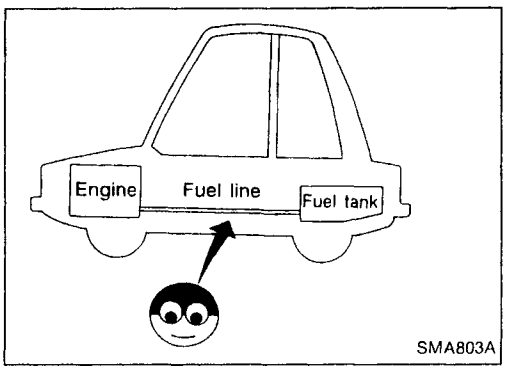

SMA803A

Checking Fuel Lines

Inspect fuel lines and tank for improper attachment and for leaks, cracks, damage, loose connections, chafing and deterioration.
If necessary, repair or replace faulty parts.

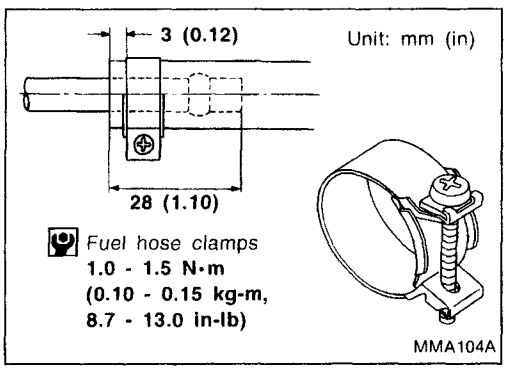

MMA104A

CAUTION:
Tighten high-pressure rubber hose clamp so that clamp end is 3 mm (0.12 in) from hose end.
Tightening torque specifications are the same for all rubber hose clamps.
Ensure that screw does not contact adjacent parts.

Changing Fuel Filter

WARNING:
Before removing fuel filter, release fuel pressure from fuel line to eliminate danger.

Simpo PDF Merge and Split Unregistered Version - http://www.simpopdf.com

Changing Fuel Filter (Cont'd)

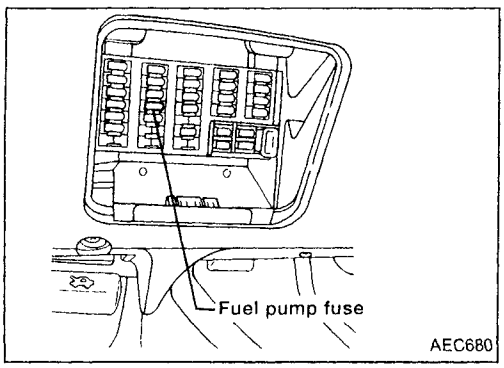

1. Remove fuse for fuel pump.
2. Start engine.
3. After engine stalls, crank engine two or three times to make sure that fuel pressure is released.
4. Turn ignition switch off and install fuse for fuel pump.

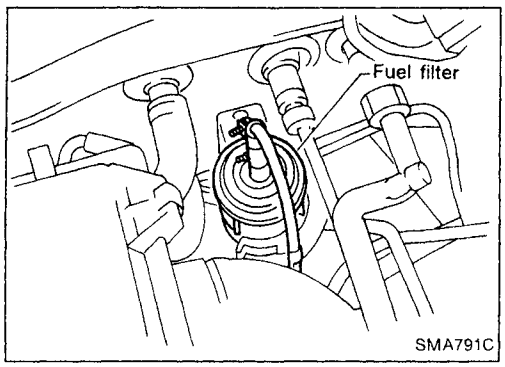

5. Loosen fuel hose clamps.
6. Replace fuel filter.

- **Be careful not to spill fuel over engine compartment. Place a shop towel to absorb fuel.**
- **Use a high-pressure type fuel filter. Do not use a synthetic resinous fuel filter.**
- **When tightening fuel hose clamps, refer to Checking Fuel Lines.**

Cleaning and Changing Air Cleaner Filter

VISCOUS PAPER TYPE

The viscous paper type filter does not need cleaning between renewals.

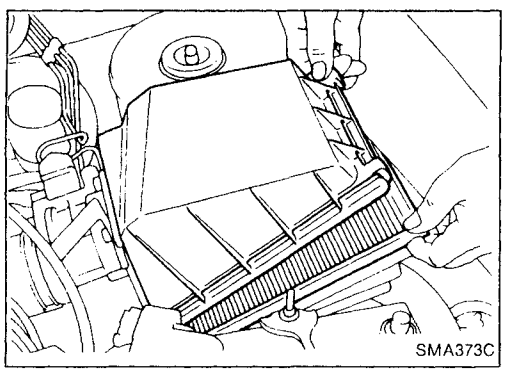

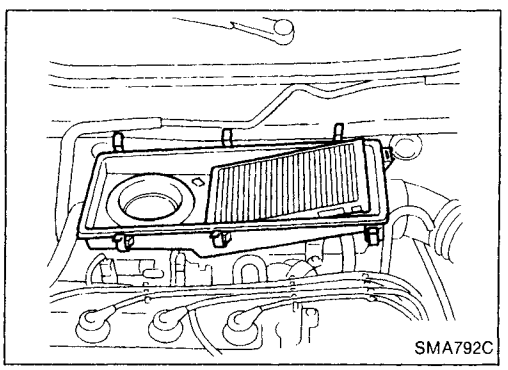

DRY PAPER TYPE

Clean or replace element more often under dusty driving conditions.

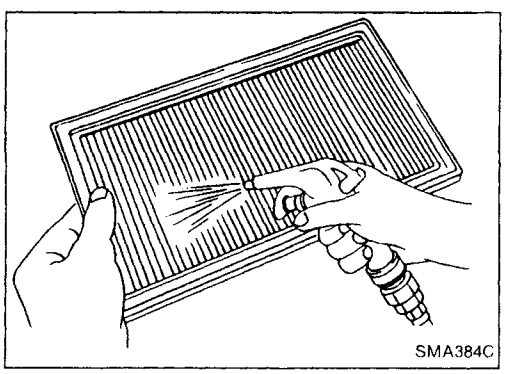

Simpo PDF Merge and Split Unregistered Version - http://www.simpopdf.com

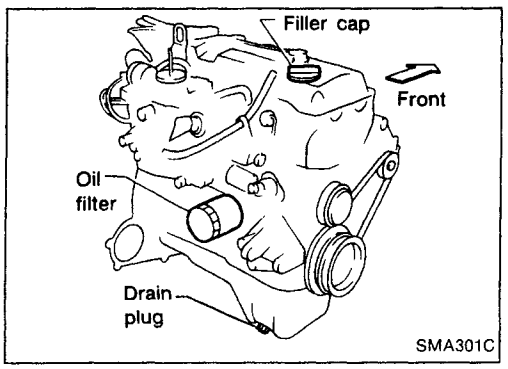

Changing Engine Oil

WARNING:

- **Be careful not to burn yourself, as the engine oil is hot.**
- **Prolonged and repeated contact with used engine oil may cause skin cancer; try to avoid direct skin contact with used oil. If skin contact is made, wash thoroughly with soap or hand cleaner as soon as possible.**

1. Warm up engine, and check for oil leakage from engine components.
2. Remove drain plug and oil filler cap.
3. Drain oil and refill with new engine oil.

Refill oil capacity (Approximate):

Unit: ℓ (Imp qt)

With oil filter change	3.2 (2-7/8)
Without oil filter change	2.8 (2-1/2)

Regarding the Anti-freeze Coolant Mixture Ratio, refer to "RECOMMENDED FLUIDS AND LUBRICANTS".

CAUTION:

- **Be sure to clean drain plug and install with new washer.**
  Drain plug:
  : 29 - 39 N·m (3.0 - 4.0 kg-m, 22 - 29 ft-lb)
- **Use recommended engine oil "API SE, SF, SG or SH" with suitable viscosity.**
- **Refill oil capacity changes depending on the oil temperature and drain time. Use these values as a reference and be certain to check with the dipstick when changing the oil.**

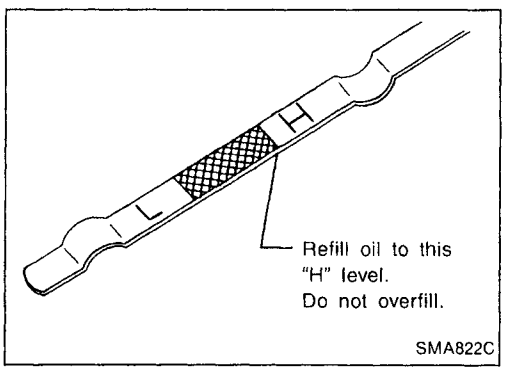

4. Check oil level.
5. Start engine and check area around drain plug and oil filter for oil leakage.
6. Run engine for a few minutes, then turn it off. After several minutes, check oil level.

Changing Oil Filter

1. Remove oil filter with Tool.

WARNING:

Be careful not to burn yourself, as the engine and the engine oil are hot.

Simpo PDF Merge and Split Unregistered Version - http://www.simpopdf.com

Changing Oil Filter (Cont'd)

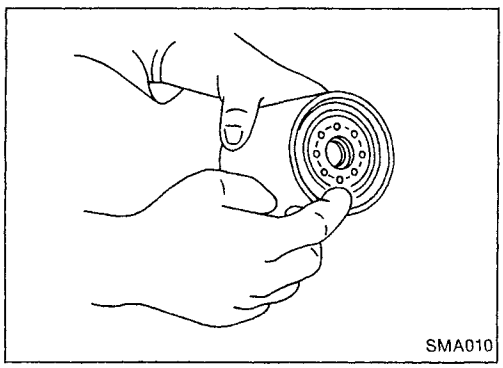

2. Before installing new oil filter, clean the oil filter mounting surface on cylinder block, and coat the rubber seal of oil filter with a little engine oil.

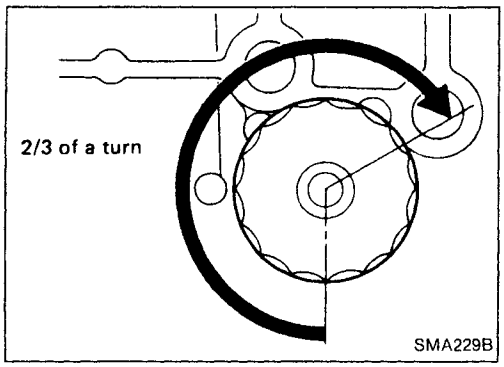

3. Screw in the oil filter until a slight resistance is felt, then tighten an additional 2/3 turn.
4. Add engine oil.

Refer to Changing Engine Oil.

- **Clean excess oil from engine.**

Checking and Changing Spark Plugs

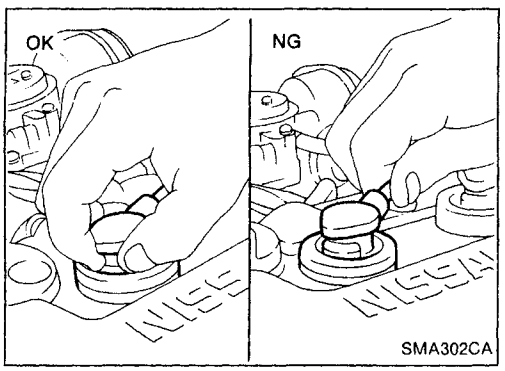

1. Disconnect ignition wires from spark plugs at boot. Do not pull on the wire.

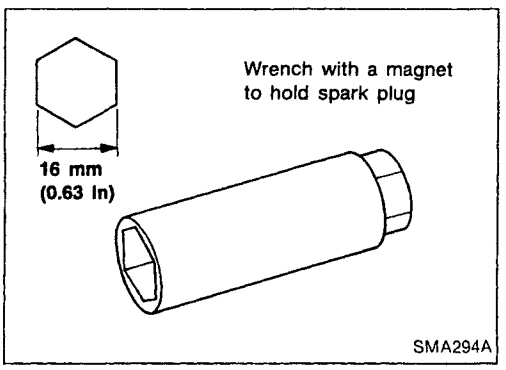

2. Remove spark plugs with spark plug wrench.
3. Clean plugs in sand blast cleaner.
4. Check insulator for cracks or chips, gasket for damage or deterioration and electrode for wear and burning. If they are excessively worn away, replace with new spark plugs.
5. Check spark plug gap.

Spark plug:

	GA16DE & GA14DE engine for Europe and Israel	GA16DE & GA15DE engine except for Europe and Israel
Type		
Standard	BKR5E	BKR5E-11
Cold	BKR6E, BKR7E	BKR6E-11, BKR7E-11
Plug gap mm (in)	0.8 - 0.9 (0.031 - 0.035)	1.0 - 1.1 (0.039 - 0.043)

Simpo PDF Merge and Split Unregistered Version - http://www.simpopdf.com

Checking and Changing Spark Plugs (Cont'd)

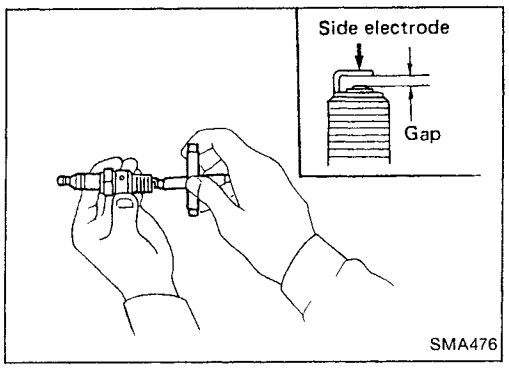

6. Install spark plugs. Reconnect ignition wires according to nos. indicated on them.

Spark plug:

(O): 20 - 29 N·m (2.0 - 3.0 kg-m, 14 - 22 ft-lb)

Checking Ignition Wires

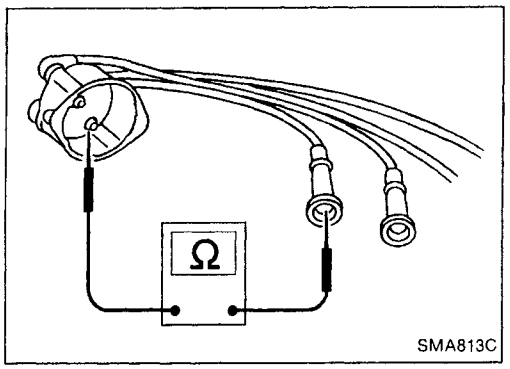

1. Inspect wires for cracks, damage, burned terminals and for improper fit.
2. Measure the resistance of wires and check for intermittent breaks.

Cylinder No.	Resistance kΩ [at 25°C (77°F)]
1	Approximately 11
2	Approximately 10
3	Approximately 8
4	Approximately 6.5

If it exceeds the limit, replace the ignition wire with a new one.

Changing Positive Crankcase Ventilation (PCV) Filter

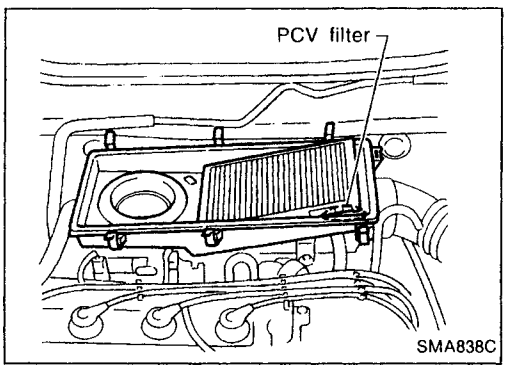

Remove air cleaner cover and replace PCV filter.

Checking EVAP Vapor Lines

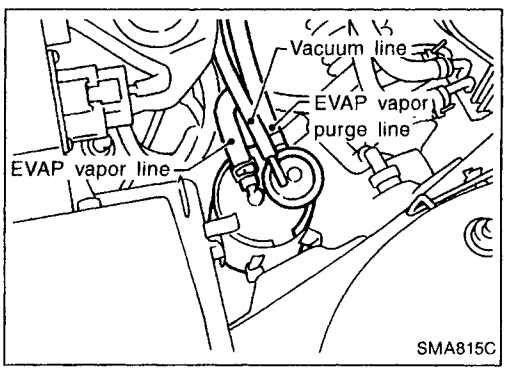

1. Visually inspect EVAP vapor lines for improper attachment and for cracks, damage, loose connections, chafing and deterioration.
2. Inspect vacuum relief valve of fuel tank filler cap for clogging, sticking, etc.

Refer to EVAPORATIVE EMISSION SYSTEM INSPECTION in EC section.

Simpo PDF Merge and Split Unregistered Version - http://www.simpopdf.com

A

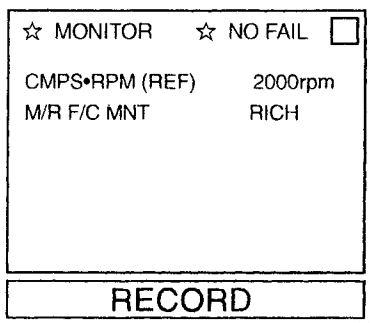

MEC711B

B

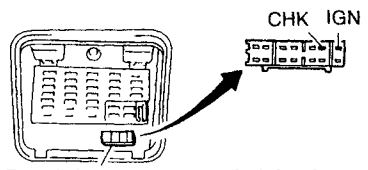

Data link connector for CONSULT (Connect CHK and IGN terminals with a suitable harness.)

SEF909P

C

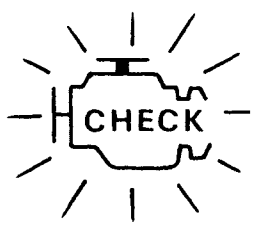

Malfunction indicator lamp

SEF051PA

Checking Oxygen Sensor (O2S) or Heated Oxygen Sensor (HO2S)

Checking procedure

INSPECTION START

↓

Start engine and warm it up until water temperature indicator points to the middle of gauge.

↓

A B C

1. See "M/R F/C MNT" in "Data monitor" mode.
2. Run engine at about 2,000 rpm for about 2 minutes under no-load.
3. Maintaining engine at 2,000 rpm under no-load (engine is warmed up sufficiently.), check that the monitor fluctuates between "LEAN" and "RICH" more than 5 times during 10 seconds.

1 time **RICH → LEAN → RICH →**
2 times **RICH → LEAN → RICH → LEAN → RICH .....**

OR

1. Set "Oxygen sensor monitor"*1 or "Heated oxygen sensor monitor"*2 in the Diagnostic test mode II. (Refer to EC section.)
2. Run engine at about 2,000 rpm for about 2 minutes under no-load.
3. Maintaining engine at 2,000 rpm under no-load, check to make sure that malfunction indicator lamp on the instrument panel goes ON and OFF more than 5 times during 10 seconds.

OK ↓

INSPECTION END

NG →

Check and adjustment should be made by referring to IDLE SPEED/ IGNITION TIMING/IDLE MIXTURE RATIO INSPECTION **(BASIC SERVICE PROCEDURE)** in EC section.

*1: Except for Australia (A/T), Israel and Europe
*2: For Australia (A/T), Israel and Europe

Simpo PDF Merge and Split Unregistered Version - http://www.simpopdf.com

Checking Drive Belts

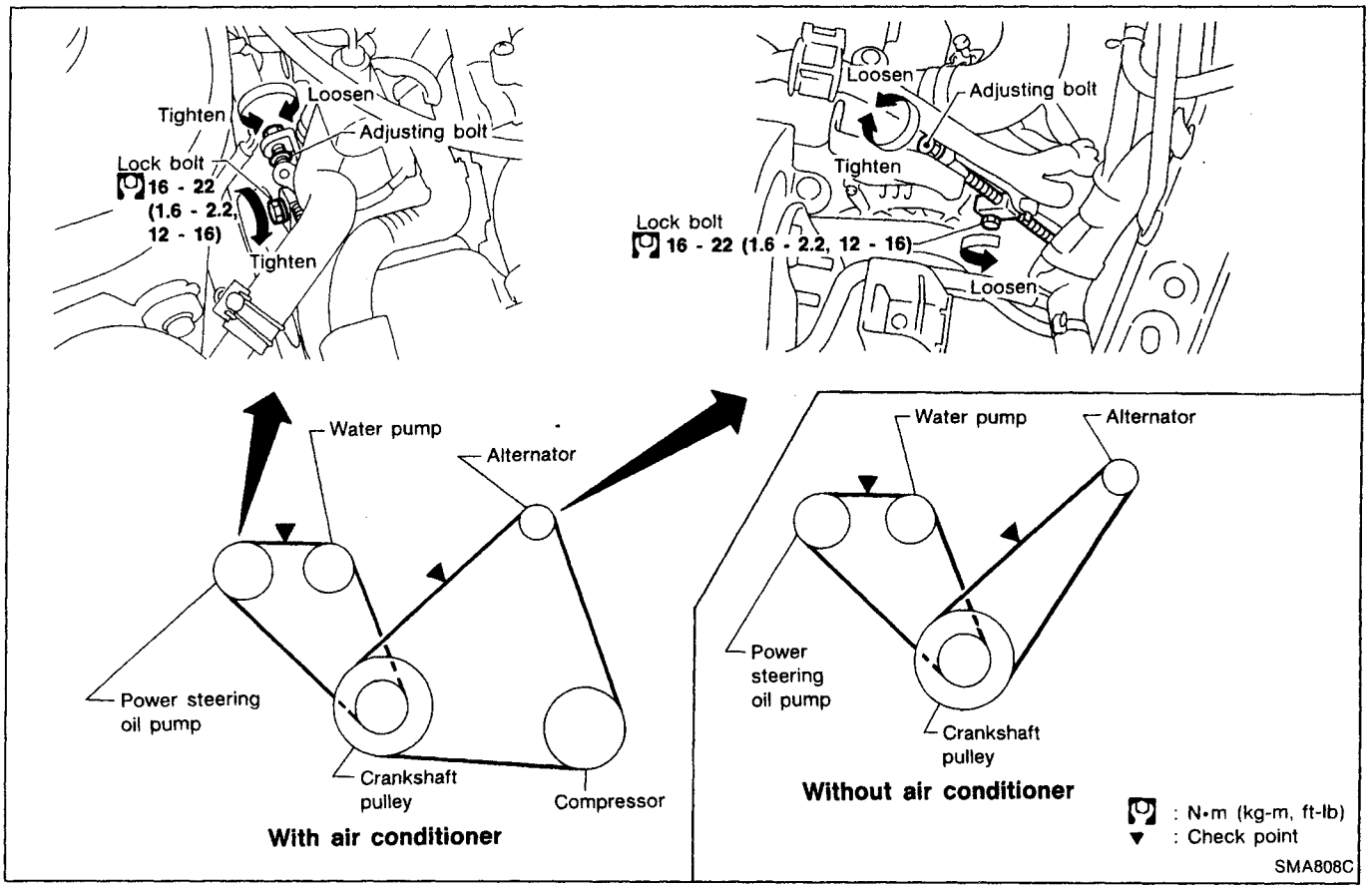

1. Inspect for cracks, fraying, wear or oil adhesion. If necessary, replace with a new one.
2. Inspect drive belt deflections by pushing on the belt midway between pulleys.

Alternator drive belt fitting place (Models without air conditioner)

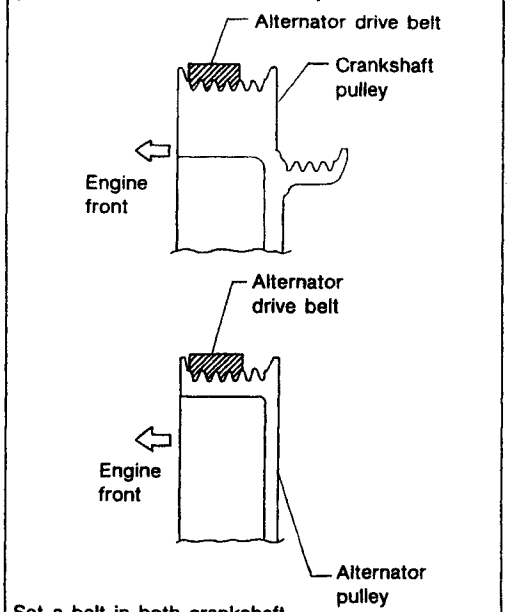

Set a belt in both crankshaft and alternator pulleys shown in the figure.

SMA328C

Adjust if belt deflections exceed the limit.
Belt deflection:

Unit: mm (in)

Drive belts	Used belt deflection		Deflection of new belt
	Limit	Deflection after adjustment	
Alternator			
With air conditioner compressor	11.5 - 12.5 (0.453 - 0.492)	7 - 8 (0.28 - 0.31)	6.5 - 7.5 (0.256 - 0.295)
Without air conditioner compressor	12 - 13 (0.47 - 0.51)	8 - 9 (0.31 - 0.35)	7 - 8 (0.28 - 0.31)
Power steering oil pump	6 - 7 (0.24 - 0.28)	4 - 5 (0.16 - 0.20)	3.5 - 4.5 (0.138 - 0.177)
Applied pushing force	98 N (10 kg, 22 lb)		

Inspect drive belt deflections when engine is cold.

Simpo PDF Merge and Split Unregistered Version - http://www.simpopdf.com

Changing Engine Coolant

WARNING:
To avoid being scalded, never change the coolant when the engine is hot.

—DRAINING ENGINE COOLANT—

1. Turn ignition switch "ON". Move heater "TEMP" control knob all the way to "HOT".

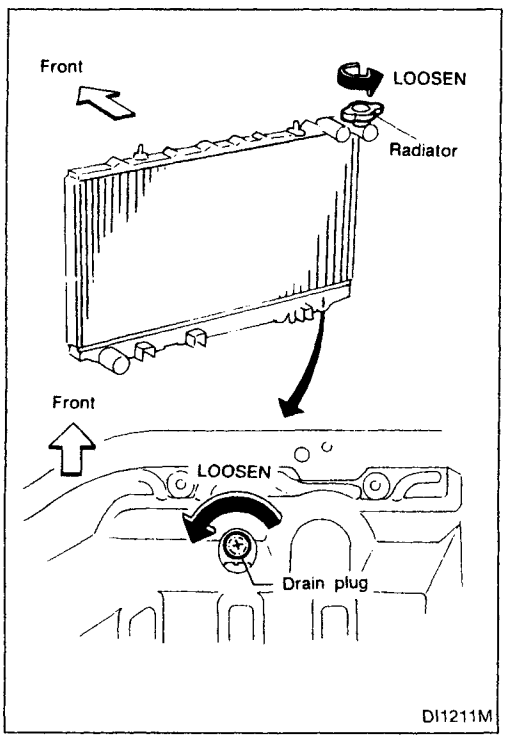

2. Open radiator drain plug at the bottom of radiator, and remove radiator cap.
3. Remove reservoir tank, drain coolant, then clean reservoir tank.
   Install it temporarily.

- **Be careful not to allow coolant to contact drive belts.**

Simpo PDF Merge and Split Unregistered Version - http://www.simpopdf.com

Changing Engine Coolant (Cont'd)

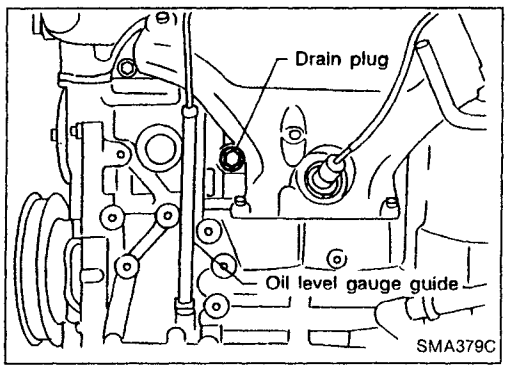

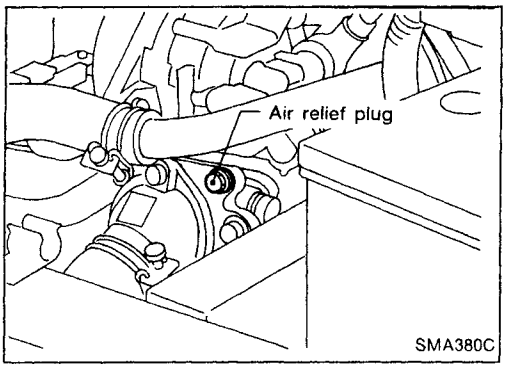

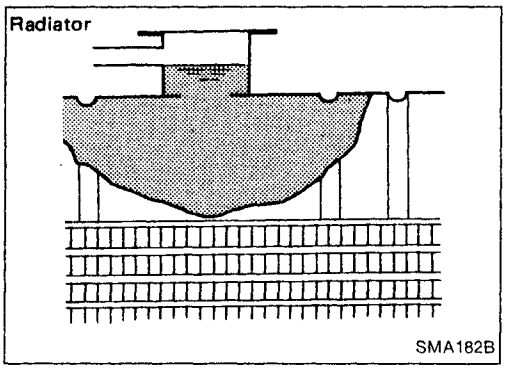

4. Remove cylinder block drain plug and air relief plug.

—FLUSHING COOLING SYSTEM—

5. Install radiator drain plug and cylinder block drain plug securely.
6. Fill radiator with water until water spills from the air relief hole, then install air relief plug.
   Fill radiator and reservoir tank with water and install radiator cap.
   Air relief plug:
   : 10 N·m (1.0 kg-m, 87 in-lb)
7. Warm up engine until cooling fan operates, then race engine 2 or 3 times under no-load.
8. Stop engine and wait until it cools down.
9. Drain water.
10. Repeat steps 2 through 9 until clear water begins to drain from radiator.

—REFILLING ENGINE COOLANT—

11. Install reservoir tank, radiator drain plug and cylinder block drain plug.

- **Apply sealant to the thread of cylinder block drain plug.**
  : 8 - 12 N·m (0.8 - 1.2 kg-m, 69 - 104 in-lb)

12. Fill radiator with coolant until coolant spills from the air relief hole, then install air relief plug.
13. Fill radiator and reservoir tank with coolant up to specified level and install radiator cap.
    Air relief plug:
    : 10 N·m (1.0 kg-m, 87 in-lb)

For coolant mixture ratio, refer to MA-16.
Coolant capacity (With reservoir tank):

Unit: ℓ (Imp qt)

	With heater	Without heater
M/T	6.1 (5-3/8)	5.8 (5-1/8)
A/T	6.6 (5-7/8)	6.3 (5-1/2)

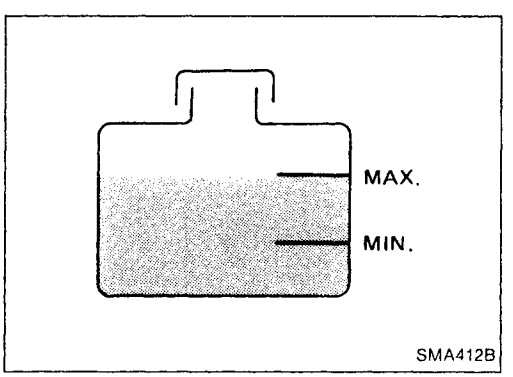

Reservoir tank capacity (for MAX level):
0.7ℓ (5/8 Imp qt)
Pour coolant through coolant filler neck slowly to allow air in system to escape.

Simpo PDF Merge and Split Unregistered Version - http://www.simpopdf.com

Changing Engine Coolant (Cont'd)

14. Warm up engine to normal operating temperature.
15. Run engine at 2,500 rpm for 10 seconds and return to idle speed.
- Repeat 2 or 3 times.

Watch coolant temperature gauge so as not to overheat the engine.

16. Stop engine and cool it down.
- Cool down using a fan to reduce the time.

17. Refill reservoir tank to Max line with coolant.
18. Repeat step 15 through step 17 two or more times.
19. Warm up engine, and check for sound of coolant flow while running engine from idle up to 4,000 rpm with heater temperature control set at several positions between COOL and HOT.
- Sound may be noticeable at heater water cock.

20. If sound is heard, bleed air from cooling system by repeating steps 14 through 17 until coolant level no longer drops.
- **Clean excess coolant from engine.**

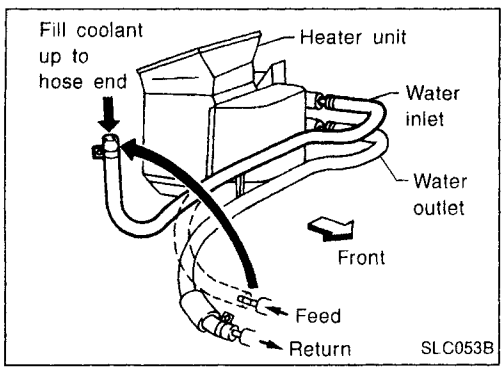

CAUTION:
When heater unit is removed or replaced, refill engine coolant as shown, removing heater hose at feeding connector on engine.

Checking Cooling System

CHECKING HOSES

Check hoses for improper attachment and for leaks, cracks, damage, loose connections, chafing and deterioration.

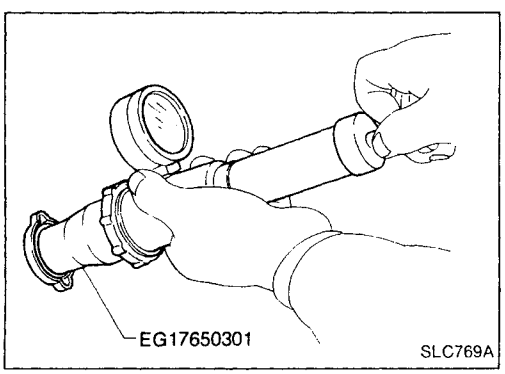

CHECKING RADIATOR CAP

Apply pressure to radiator cap with cap tester to see if it is satisfactory.

Radiator cap relief pressure:
Standard
78 - 98 kPa
(0.78 - 0.98 bar, 0.8 - 1.0 kg/cm^2, 11 - 14 psi)
Limit
59 - 98 kPa
(0.59 - 0.98 bar, 0.6 - 1.0 kg/cm^2, 9 - 14 psi)

Simpo PDF Merge and Split Unregistered Version - http://www.simpopdf.com

Checking Cooling System (Cont'd)

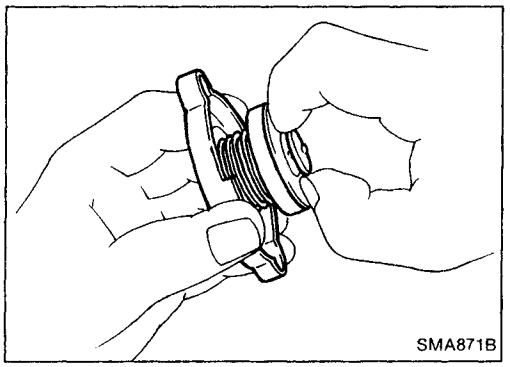

Pull the negative-pressure valve to open it. Check that it closes completely when released.

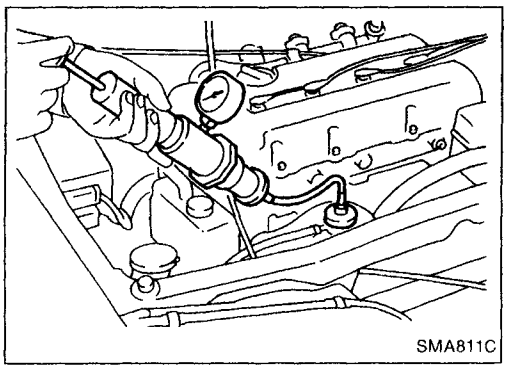

CHECKING COOLING SYSTEM FOR LEAKS

Apply pressure to the cooling system with cap tester to check for leakage.

Testing pressure:

157 kPa (1.57 bar, 1.6 kg/cm^2, 23 psi)

CAUTION:

Higher pressure than the specified value may cause damage to radiator.

Checking Fuel Lines

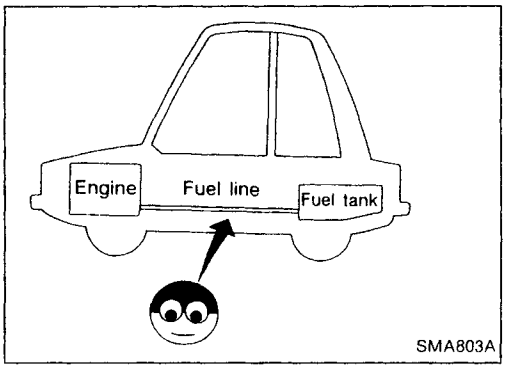

Inspect fuel lines and tank for improper attachment, leaks, cracks, damage, loose connections, chafing or deterioration. If necessary, repair or replace faulty parts.

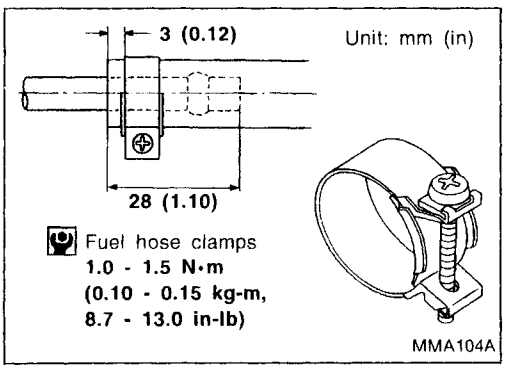

CAUTION:

Tighten high-pressure rubber hose clamp so that clamp end is 3 mm (0.12 in) from hose end.

Tightening torque specifications are the same for all rubber hose clamps.

Ensure that screw does not contact adjacent parts.

Changing Fuel Filter

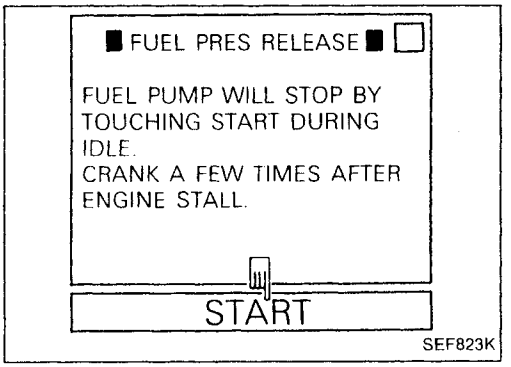

WARNING:

Before removing fuel filter, release fuel pressure from fuel line to eliminate danger.

1. Start engine.
2. Perform "FUEL PRESSURE RELEASE" in "WORK SUPPORT" mode with CONSULT.
3. After engine stalls, crank engine two or three times to make sure that fuel pressure is released.
4. Turn ignition switch off.

Simpo PDF Merge and Split Unregistered Version - http://www.simpopdf.com

Changing Fuel Filter (Cont'd)

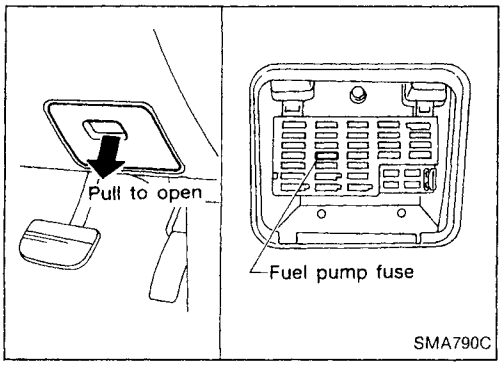

1. Remove fuse for fuel pump.
2. Start engine.
3. After engine stalls, crank engine two or three times to make sure that fuel pressure is released.
4. Turn ignition switch off and install fuse for fuel pump.

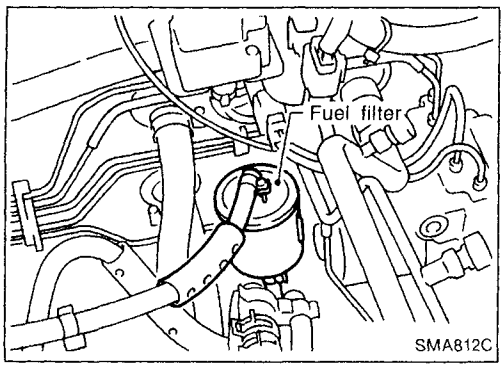

5. Loosen fuel hose clamps.
6. Replace fuel filter.

- **Be careful not to spill fuel over engine compartment. Place a shop towel to absorb fuel.**
- **Use a high-pressure type fuel filter. Do not use a synthetic resinous fuel filter.**
- **When tightening fuel hose clamps, refer to "Checking Fuel Lines".**

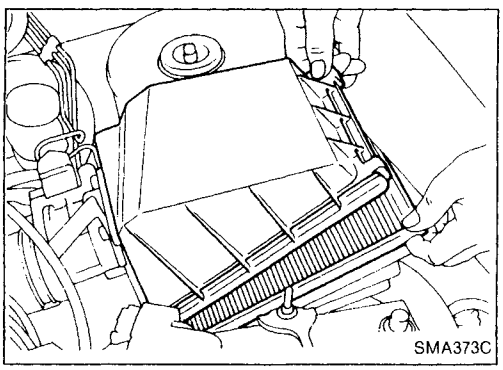

Changing Air Cleaner Filter

Viscous paper type

The viscous paper type filter does not need cleaning between renewals.

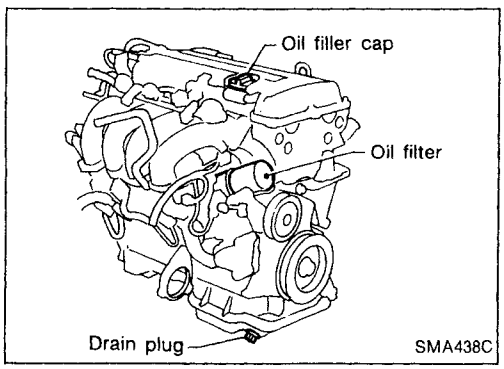

Changing Engine Oil

WARNING:

- **Be careful not to burn yourself, as the engine oil is hot.**
- **Prolonged and repeated contact with used engine oil may cause skin cancer; try to avoid direct skin contact with used oil. If skin contact is made, wash thoroughly with soap or hand cleaner as soon as possible.**

1. Warm up engine, and check for oil leakage from engine components.
2. Remove drain plug and oil filler cap.
3. Drain oil and refill with new engine oil.

Refill oil capacity (Approximate):

Unit: ℓ (Imp qt)

With oil filter change	3.4 (3)
Without oil filter change	3.2 (2-7/8)

CAUTION:

- **Be sure to clean drain plug and install with new washer.**
  Drain plug:
  : 29 - 39 N·m (3.0 - 4.0 kg-m, 22 - 29 ft-lb)
- **Use recommended engine oil (API SE, SF, SG or SH grade).**

The refill capacity changes depending on the oil temperature and drain time, use these values as a reference and be certain to check with the dipstick when changing the oil.

Simpo PDF Merge and Split Unregistered Version - http://www.simpopdf.com

Changing Engine Oil (Cont'd)

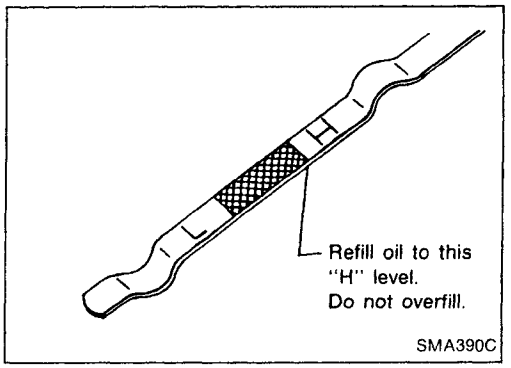

4. Check oil level.
5. Start engine and check area around drain plug and oil filter for oil leakage.
6. Run engine for a few minutes, then turn it off. After several minutes, check oil level.

Changing Oil Filter

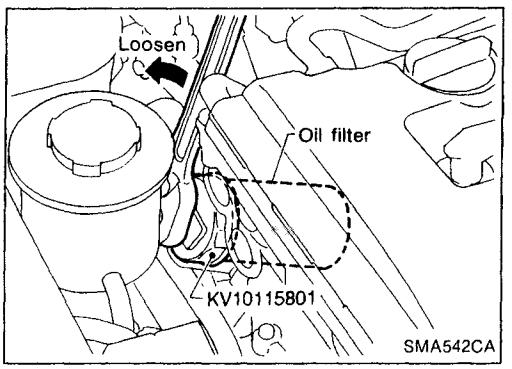

1. Remove oil filter with Tool.

WARNING:

Be careful not to burn yourself, as the engine and the engine oil are hot.

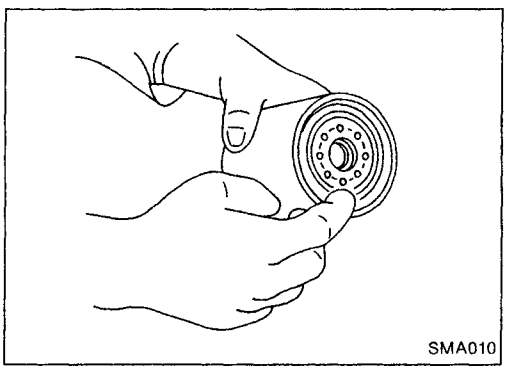

2. Clean oil filter mounting surface on cylinder block. Coat rubber seal of new oil filter with engine oil.

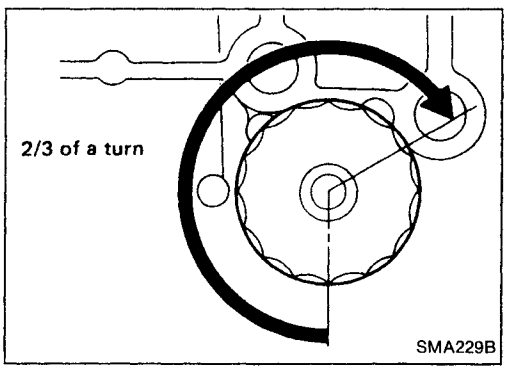

3. Screw in the oil filter until a slight resistance is felt, then tighten an additional 2/3 turn.
4. Add engine oil.

Refer to Changing Engine Oil.

- **Clean excess oil from engine.**

Changing Spark Plugs (Platinum-tipped type)

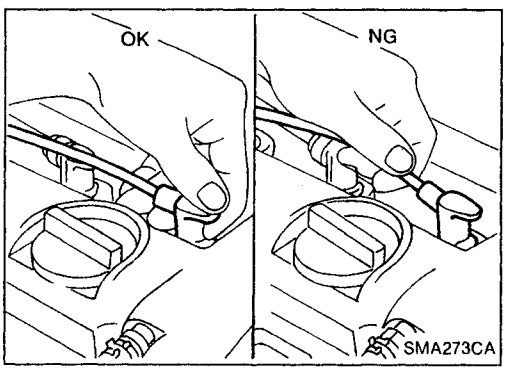

1. Disconnect ignition wires from spark plugs at boot. Do not pull on the wire.

Simpo PDF Merge and Split Unregistered Version - http://www.simpopdf.com

Changing Spark Plugs (Platinum-tipped type) (Cont'd)

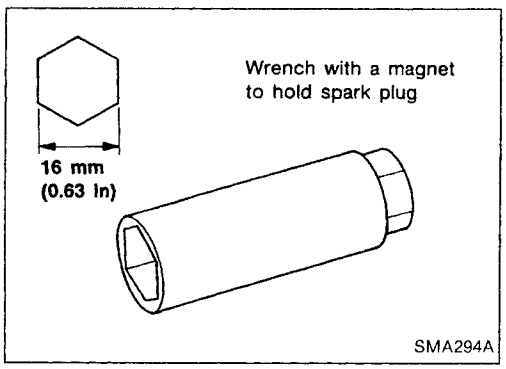

2. Remove spark plugs with suitable spark plug wrench.

Spark plug:

Make	NGK
Standard type	PFR5B-11
Alternative	PFR6B-11 PFR7B-11

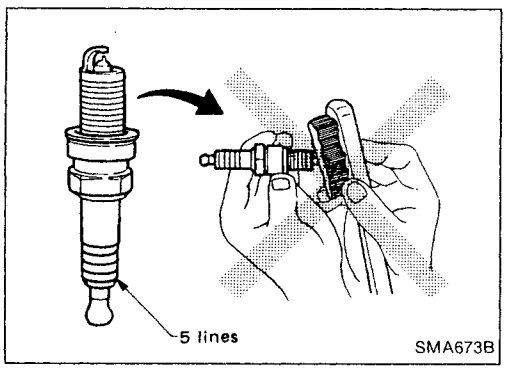

- **Do not use a wire brush for cleaning.**
- **If plug tip is covered with carbon, spark plug cleaner may be used.**
  Cleaner air pressure:
  Less than 588 kPa (5.9 bar, 6 kg/cm^2, 85 psi)
  Cleaning time:
  Less than 20 seconds

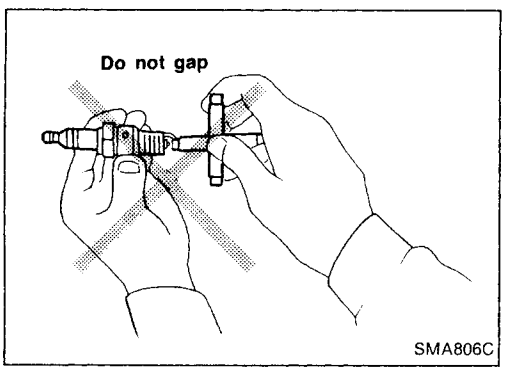

- **Checking and adjusting plug gap are not required between change intervals.**

3. Install spark plugs Reconnect ignition wires according to numbers. indicated on them.
   Spark plug:
   (O): 20 - 29 N·m (2.0 - 3.0 kg-m, 14 - 22 ft-lb)

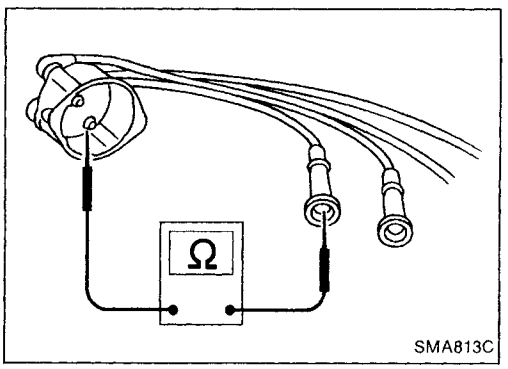

Checking Ignition Wires

1. Inspect wires for cracks, damage, burned terminals and for improper fit.
2. Measure the resistance of wires and check for intermittent breaks.

Resistance:

Cylinder No.	Resistance kΩ [at 25°C (77°F)]
1	Approximately 11
2	Approximately 9.5
3	Approximately 8
4	Approximately 7

If it exceeds the limit, replace the ignition wire with a new one.

Simpo PDF Merge and Split Unregistered Version - http://www.simpopdf.com

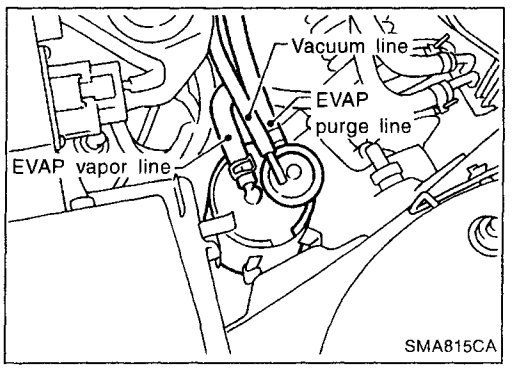

Checking EVAP Vapor & Purge Lines

1. Visually inspect EVAP vapor and purge lines for improper attachment and for cracks, damage, loose connections, chafing and deterioration.
2. Inspect vacuum relief valve of fuel tank filler cap for clogging, sticking, etc.

Refer to EVAPORATIVE EMISSION SYSTEM in EC section.

Simpo PDF Merge and Split Unregistered Version - http://www.simpopdf.com

Checking Heated Oxygen Sensor (HO2S)

Checking procedure

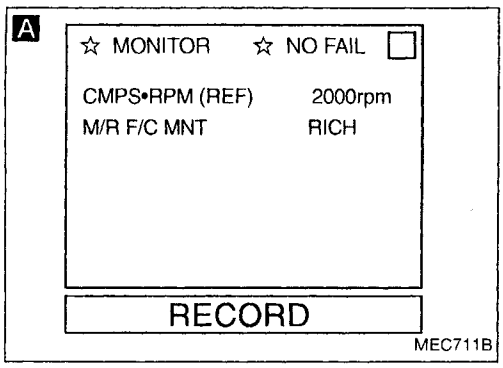

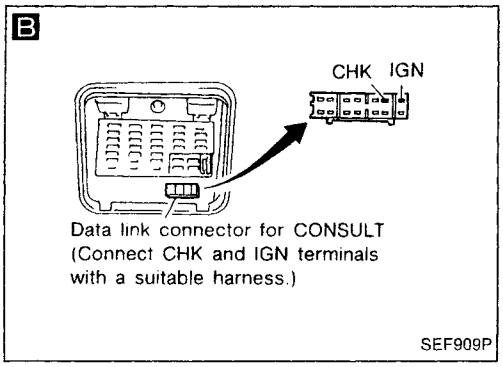

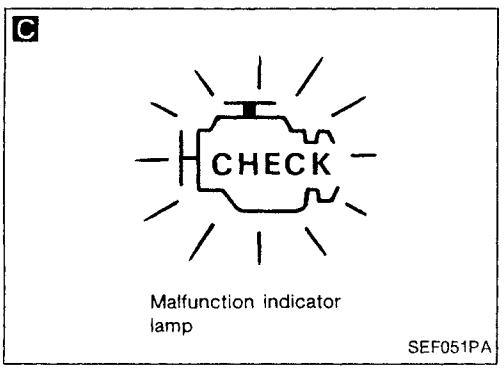

INSPECTION START

Start engine and warm it up until water temperature indicator points to the middle of gauge.

A B C

1. See "M/R F/C MNT" in "Data monitor" mode.
2. Run engine at about 2,000 rpm for about 2 minutes under no-load.
3. Maintaining engine at 2,000 rpm under no-load (engine is warmed up sufficiently.), check that the monitor fluctuates between "LEAN" and "RICH" more than 5 times during 10 seconds.

1 time **RICH → LEAN → RICH →**
2 times **RICH → LEAN → RICH → LEAN → RICH .....**

OR

1. Set "Heated oxygen sensor monitor" in the Diagnostic test mode II. (Refer to EC section.)
2. Run engine at about 2,000 rpm for about 2 minutes under no-load.
3. Maintaining engine at 2,000 rpm under no-load, check to make sure that malfunction indicator lamp on the instrument panel goes ON and OFF more than 5 times during 10 seconds.

OK

NG → Check and adjustment should be made by referring to IDLE SPEED/ IGNITION TIMING/IDLE MIXTURE RATIO INSPECTION in EC section.

INSPECTION END

Simpo PDF Merge and Split Unregistered Version - http://www.simpopdf.com

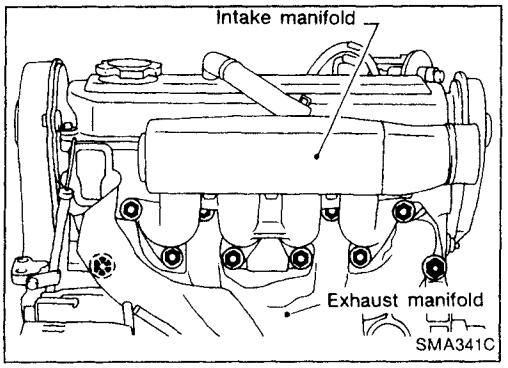

Manifold Nut Check

1. Remove exhaust manifold cover.
2. Tighten manifold bolts and nuts to the specified torque. Refer to "SERVICE DATA AND SPECIFICATIONS (SDS)".
3. Install exhaust manifold cover.

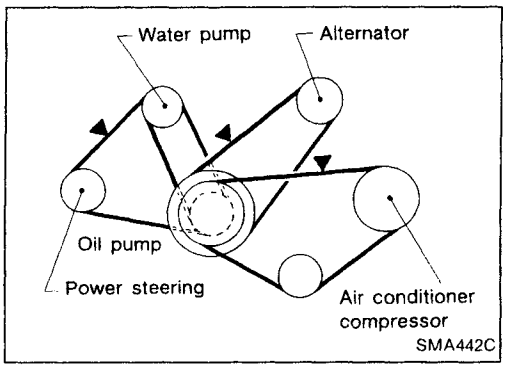

Checking Drive Belt

WARNING:

Inspect drive belt deflections when engine is cold. When engine is hot, check deflections at least 30 minutes after engine has been switched off.

1. Inspect belts for cracks, fraying, wear or oil adhesion. If necessary, replace with new ones.
2. Inspect drive belt deflections by pushing on the belt midway between pulleys.
3. Adjust belt deflection if it exceeds the limit.

Belt deflection:

Unit: mm (in)

	Used belt deflection		Deflection of new belt
	Limit	Deflection after adjustment	
Alternator	14 (0.55)	11 - 13 (0.43 - 0.51)	9 - 11 (0.35 - 0.43)
Air conditioner compressor	14 (0.55)	11 - 13 (0.43 - 0.51)	9 - 11 (0.35 - 0.43)
Power steering oil pump	8 (0.31)	5 - 7 (0.20 - 0.28)	4 - 6 (0.16 - 0.24)
Water pump without power steering	—	8 (0.31)	6 (0.24)
Applied pushing force	98 N (10 kg, 22 lb)		

Inspect drive belt deflections when engine is cold.

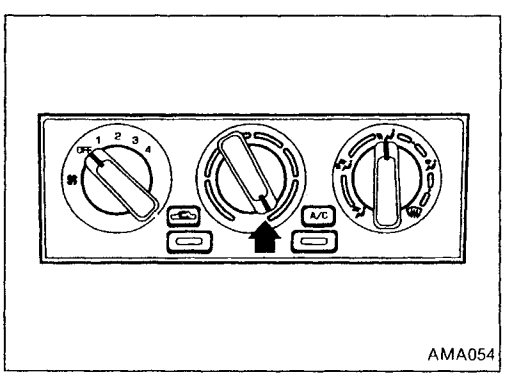

Changing Engine Coolant

WARNING:

To avoid the danger of being scalded, never attempt to change the coolant when the engine is hot.

1. Set heater "TEMP" control dial to the max. "HOT" position.

- **Make sure that air conditioner switch is "OFF".**

Simpo PDF Merge and Split Unregistered Version - http://www.simpopdf.com

Changing Engine Coolant (Cont'd)

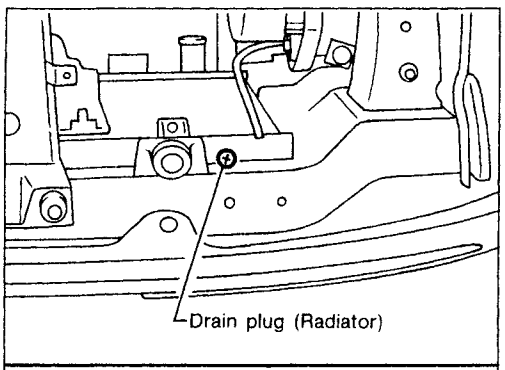

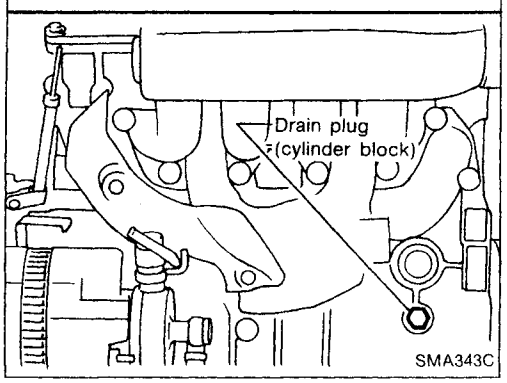

2. Open drain plugs on the bottom right of radiator and on the left side of cylinder block.
3. Remove radiator cap and drain coolant.
4. Close drain plugs and fill radiator with water up to filler neck.
5. Warm up engine and repeat steps 2, 3 and 4 one or two times to drain old coolant.

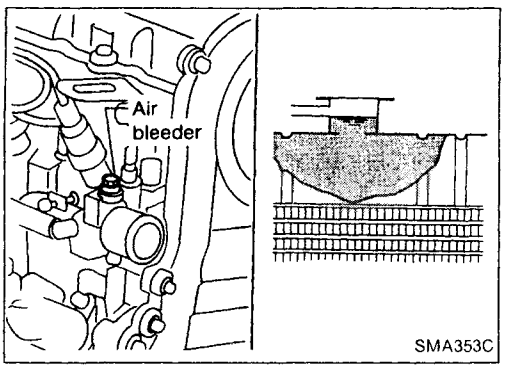

6. Open air bleeder on intake manifold.
7. Fill radiator with coolant up to filler neck.
   Follow instructions attached to anti-freeze container for anti-freeze to water mixing ratio.

Pour coolant slowly to allow air in system to escape.

Coolant capacity:

Unit: ℓ (Imp qt)

With heater	5.2 (4-5/8)
Without heater	4.9 (4-3/8)

Regarding the Anti-freeze Coolant Mixture Ratio, refer to "RECOMMENDED FLUIDS AND LUBRICANTS".

8. Securely close air bleeder.
9. Fill reservoir tank with coolant up to "MAX" level.
10. Warm up engine at about 2,000 rpm to normal operating temperature.
11. Stop engine and allow it to cool.
12. Check coolant level and refill reservoir tank if necessary.

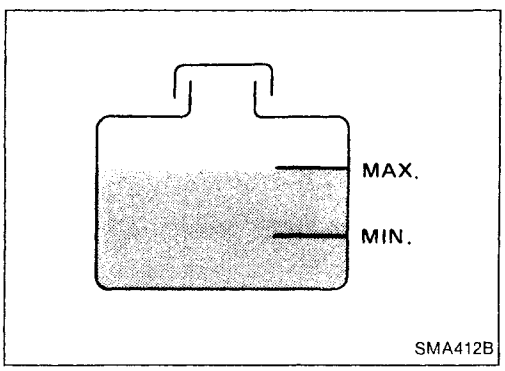

- **Clean excess coolant from engine.**

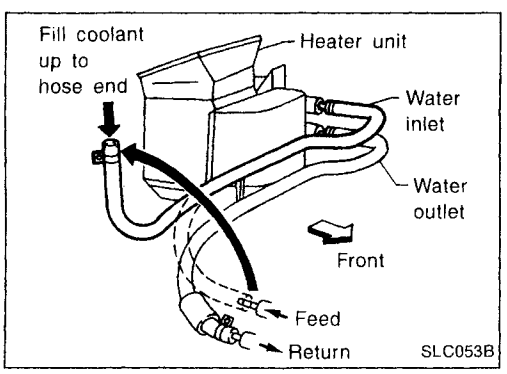

CAUTION:

When heater unit is removed or replaced, refill engine coolant as shown, removing heater hose at feeding connector on engine.

Simpo PDF Merge and Split Unregistered Version - http://www.simpopdf.com

Checking Cooling System

HOSE AND CLAMP CHECK

Check hoses for improper attachment, leaks, cracks, damage, loose connections, chafing and deterioration.

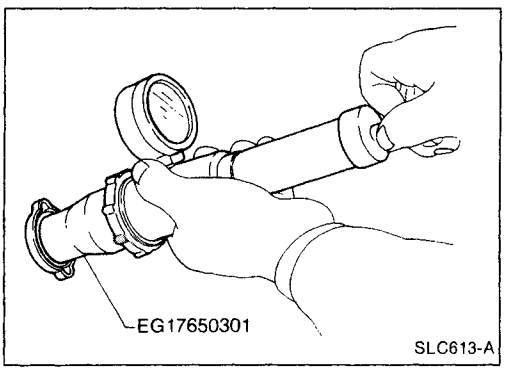

CHECKING RADIATOR CAP

1. Check relief pressure with cap tester.
   Radiator cap relief pressure:
   Standard
   78 - 98 kPa
   (0.78 - 0.98 bar, 0.8 - 1.0 kg/cm^2, 11 - 14 psi)
   Limit
   59 - 98 kPa
   (0.59 - 0.98 bar, 0.6 - 1.0 kg/cm^2, 9 - 14 psi)
   Replace radiator cap if pressure is not within the specified values.

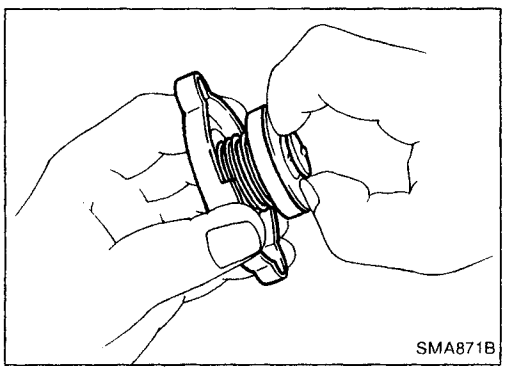

2. Pull the negative-pressure valve to open it, and check that it closes completely when released.

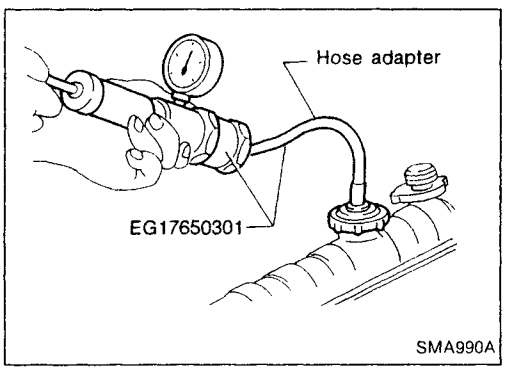

CHECKING COOLING SYSTEM FOR LEAKS

Apply pressure to the cooling system with cap tester to check for leakage.

Testing pressure:
157 kPa (1.57 bar, 1.6 kg/cm^2, 23 psi)

CAUTION:
Use of higher pressure than that specified value may cause damage to radiator.

Checking Fuel Line

Inspect fuel lines and tank for improper attachment, leaks, cracks, damage, loose connections, chafing and deterioration. If necessary, repair or replace malfunctioning parts.

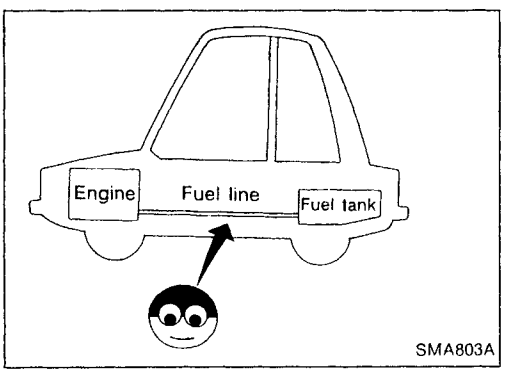

Simpo PDF Merge and Split Unregistered Version - http://www.simpopdf.com

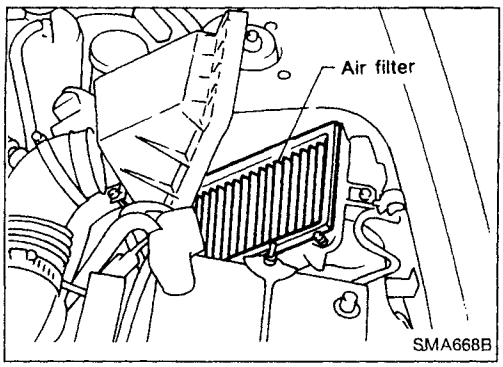

Changing Air Cleaner Filter

The viscous paper type air cleaner filter does not require any cleaning operation between renewals.

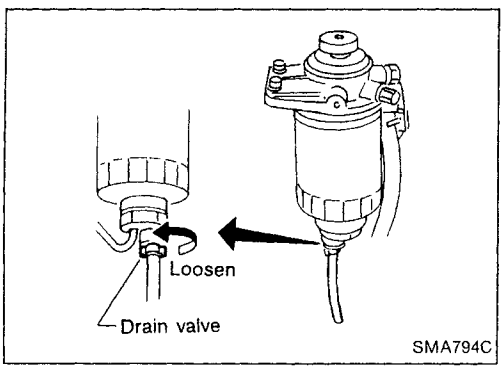

Water Draining, Fuel Filter Check and Replacement

DRAINING WATER

Open drain valve at the bottom of fuel filter.

FUEL FILTER CHECK

Check fuel filter for fuel leakage, damage and other abnormal signs.

REPLACING FUEL FILTER

1. Disconnect water sensor connector and replace fuel filter with a new one.

Hand-tighten fuel filter by about 2/3 turn after O-ring touches mounting surface. Follow the instructions on fuel filter.

2. Connect water sensor connector and bleed fuel system.

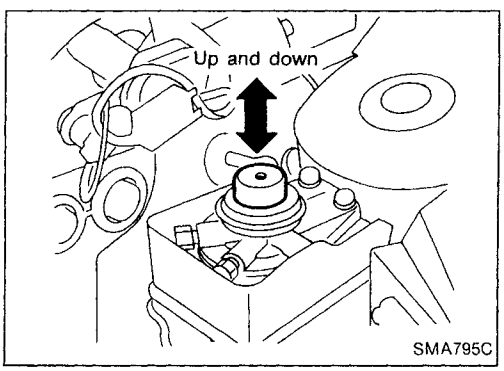

FUEL SYSTEM AIR BLEEDING

1. Move priming pump up and down until **there is suddenly more resistance in the movement. Then stop this action and start the engine.**
2. If engine does not operate smoothly after being started, race it two or three times.

When refilling empty fuel tank, bleed air out of fuel system.

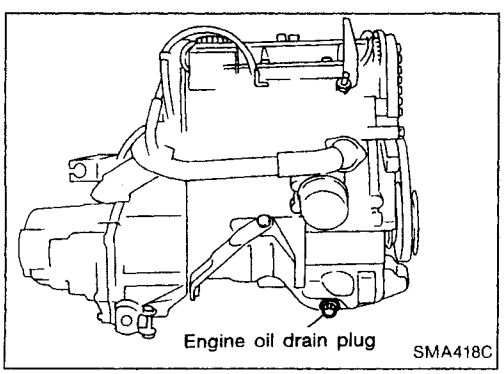

Changing Engine Oil

WARNING:

- **Be careful not to burn yourself, as engine oil is hot.**
- **Prolonged and repeated contact with used engine oil may cause skin cancer; try to avoid direct skin contact with used oil. If skin contact is made, wash thoroughly with soap or hand cleaner as soon as possible.**

1. Warm up engine, and check for oil leakage from engine components.
2. Remove oil drain plug and drain oil.

Simpo PDF Merge and Split Unregistered Version - http://www.simpopdf.com

Changing Engine Oil (Cont'd)

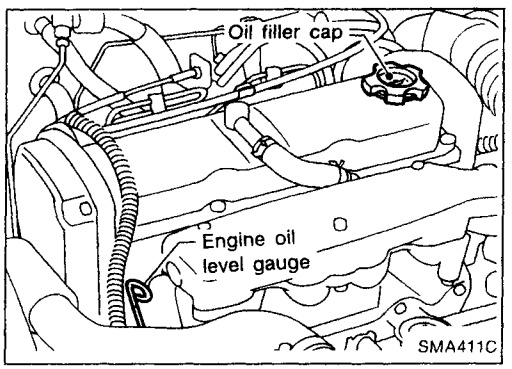

3. Tighten oil drain plug.
4. Fill with engine oil.
   Oil refill capacity:
   Without oil filter
   4.6 ℓ (4 Imp qt)
   With oil filter
   5.1 ℓ (4-1/2 Imp qt)

- **Use recommended engine oil "API CD" with suitable viscosity.**

5. Confirm oil level and warm up engine.
6. Recheck oil level and adjust it to "H" level if necessary.

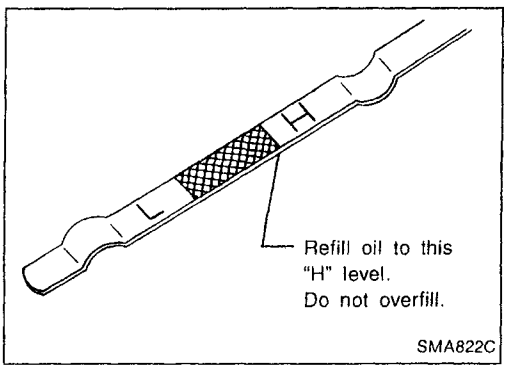

Changing Engine Oil Filter

1. Remove oil filter with Tool.

WARNING:
Be careful not to burn yourself, as engine and engine oil are hot.

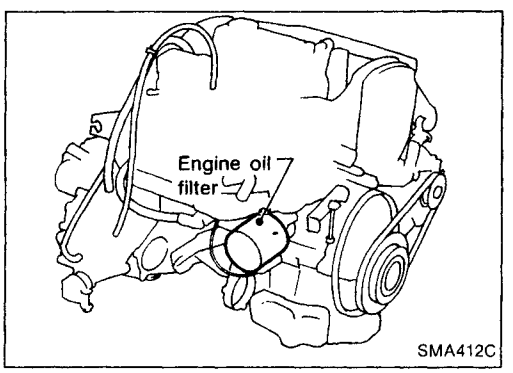

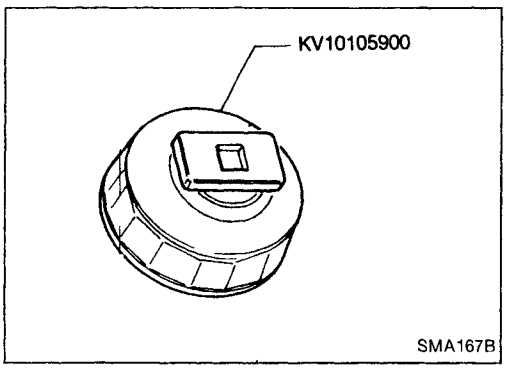

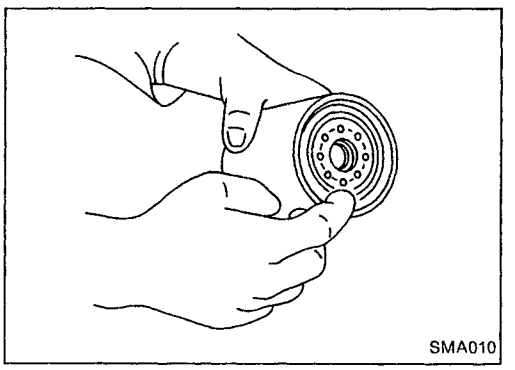

2. Before installing new oil filter, wipe clean oil filter mounting surface on cylinder block, and apply a little engine oil to rubber seal of oil filter.

Simpo PDF Merge and Split Unregistered Version - http://www.simpopdf.com

Changing Engine Oil Filter (Cont'd)

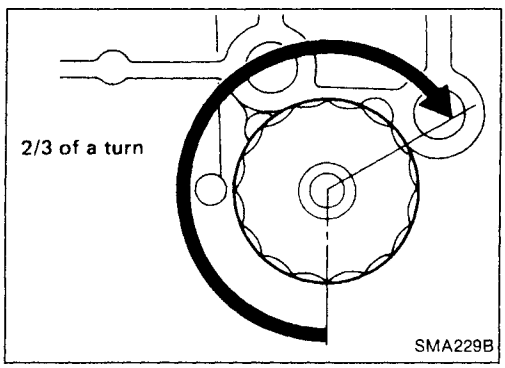

3. Screw oil filter on until a slight resistance is felt, then tighten an additional 2/3 turn.
4. Warm up engine and check oil level.
5. Adjust oil level if necessary.

Refer to Step 4 in "Changing Engine Oil", MA-42.

- **Clean excess oil from engine.**

Checking Injection Nozzle

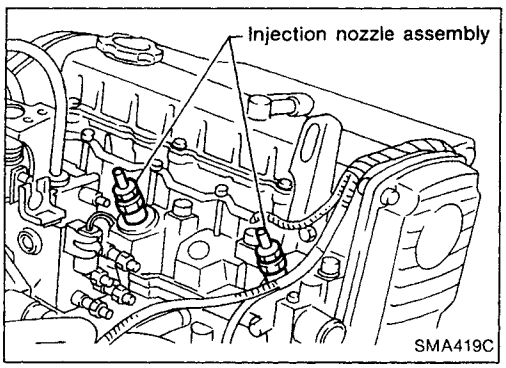

1. Remove injection delivery tubes and fuel spill tube.
2. Remove nozzle with a suitable tool [span 27 mm (1.06 in)].

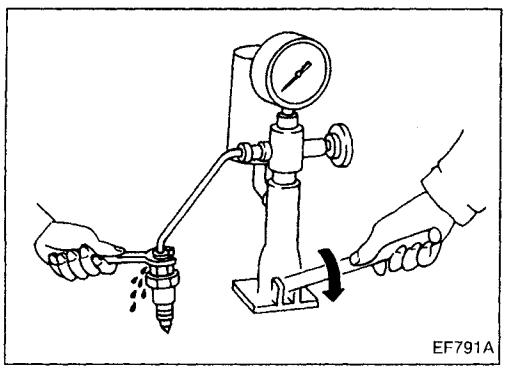

WARNING:
When using nozzle tester, be careful not to allow diesel fuel sprayed from nozzle to come into contact with your hand or body, and make sure that your eyes are properly protected.

3. Clean and check nozzles.
4. Install nozzle to injection nozzle tester and bleed air from flare nut.
5. Check initial injection pressure by pumping tester handle one time per second.

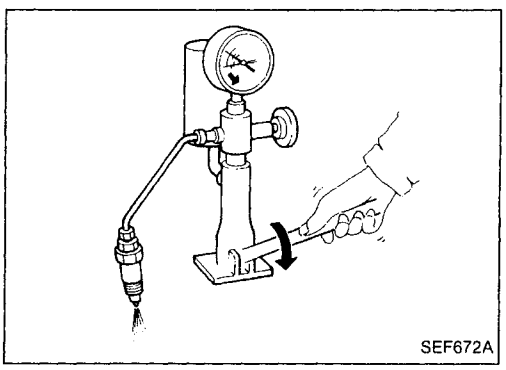

6. Install injector to pressure tester.
7. Check initial injection pressure by pumping tester handle slowly (one time per second).

   Injection pressure:

   12,749 kPa (127.5 bar, 130 kg/cm^2, 1,849 psi)

- **Always check initial injection pressure before installing new nozzle.**

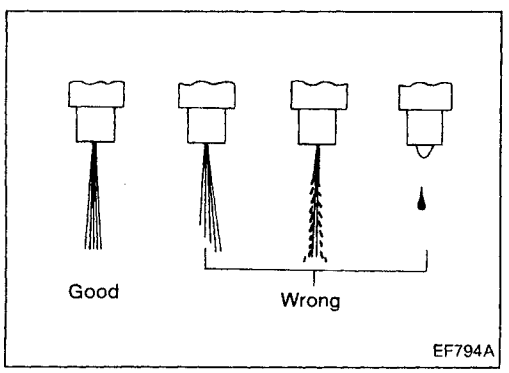

8. Check fuel spray pattern by pumping tester handle quickly (4 or 6 times per second).
9. If initial injection pressure or injection nozzle is not normal, adjust or clean injection nozzle or replace it.

Refer to EC section for injection pressure adjustment.

10. Install all injection nozzles and securely connect fuel spill tube and delivery tubes.
11. Bleed air from fuel system and check for fuel leakage with engine running.

Simpo PDF Merge and Split Unregistered Version - http://www.simpopdf.com

Checking Injection Nozzle (Cont'd)

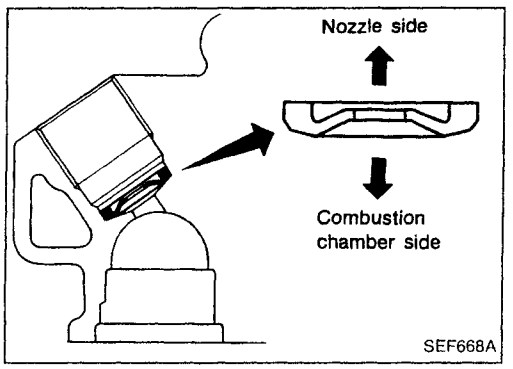

Checking Idle Speed

PREPARATION

1. Make sure that injection timing is correct.
2. Make sure that injection nozzles are in good condition.
3. Make sure that the following parts are in good condition.

- Air cleaner clogging
- Glow system
- Engine oil and coolant levels
- Air intake system (Oil filler cap, oil level gauge, etc.)

4. Set shift lever in "Neutral" position. Engage parking brake and lock both front and rear wheels with wheel chocks.
5. Turn off air conditioner, lights and accessories.
6. Warm up engine to normal operating temperature.
7. Attach a diesel tacho tester.
8. Race engine two or three times and check idle speed.

Idle speed (M/T):
700^{+50}_{-0} rpm

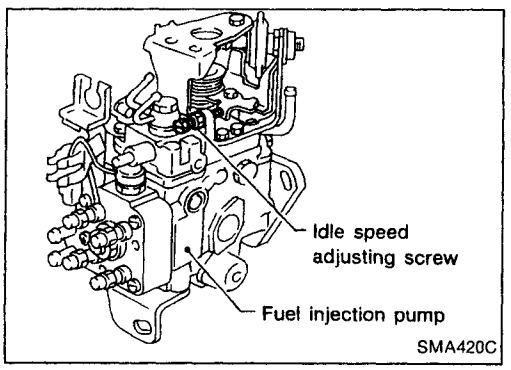

9. If it is out of specification, adjust idle speed with idle speed adjusting screw.

Securely lock the adjusting screw with lock nut.

Replacing Timing Belt

Refer to "TIMING BELT" in EM section.

Simpo PDF Merge and Split Unregistered Version - http://www.simpopdf.com

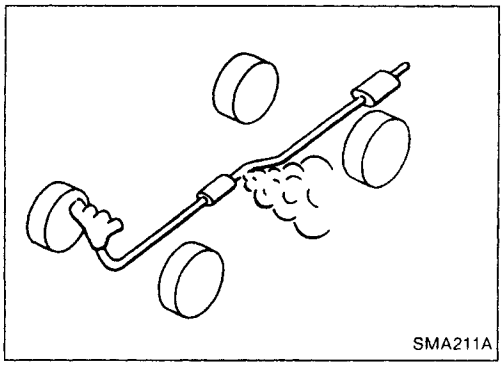
SMA211A

Checking Exhaust System

Check exhaust pipes, muffler and mounting for improper attachment and for leaks, cracks, damage, loose connections, chafing and deterioration.

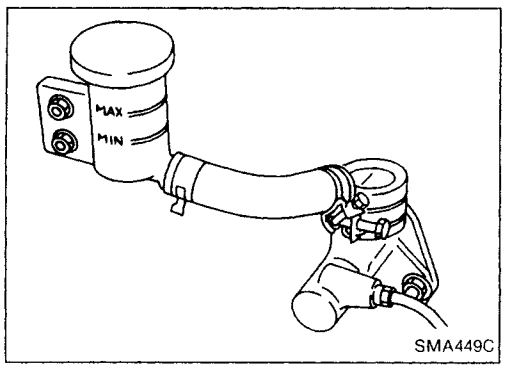

SMA449C

Checking Clutch Fluid Level and Leaks

If fluid level is extremely low, check clutch system for leaks.

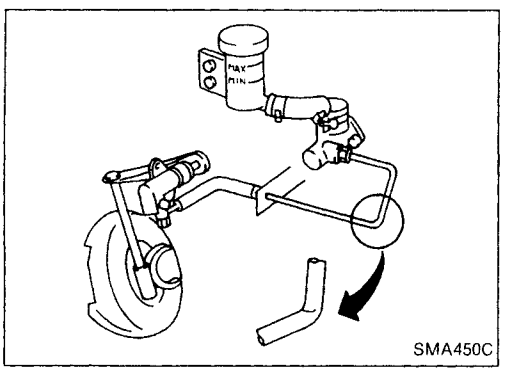
SMA450C

Checking Clutch System

HYDRAULIC TYPE

Check fluid lines and operating cylinder for improper attachment, cracks, damage, loose connections, chafing and deterioration.

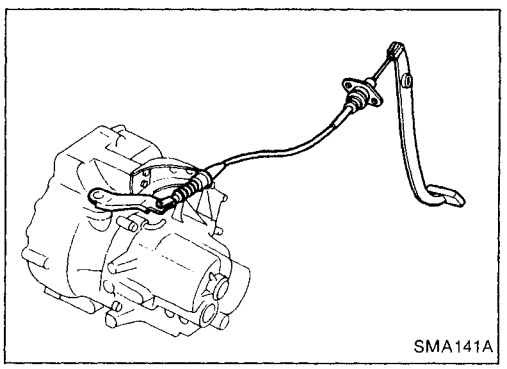
SMA141A

MECHANICAL TYPE

Check cable and links for improper attachment, chafing, wear and deterioration.

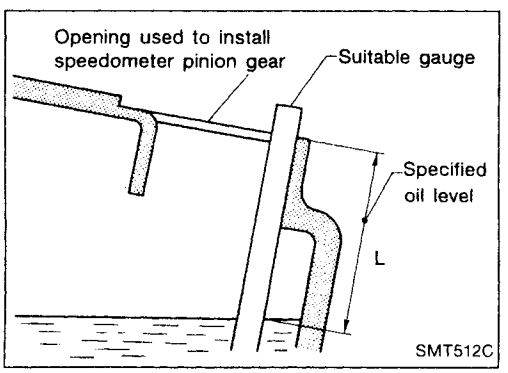

SMT512C

Checking M/T Oil

- Check that oil is not leaking from transaxle or around it.
- Remove speedometer pinion and check that the oil level L at vehicle rear side is within specification.

Specified oil level (Dimension L):

RS5F30A 58 - 66 mm (2.28 - 2.60 in)
RS5F31A
GA engine 57 - 66 mm (2.24 - 2.60 in)
CD engine 54 - 61 mm (2.13 - 2.40 in)
RS5F32A 39 - 44 mm (1.54 - 1.73 in)

Simpo PDF Merge and Split Unregistered Version - http://www.simpopdf.com

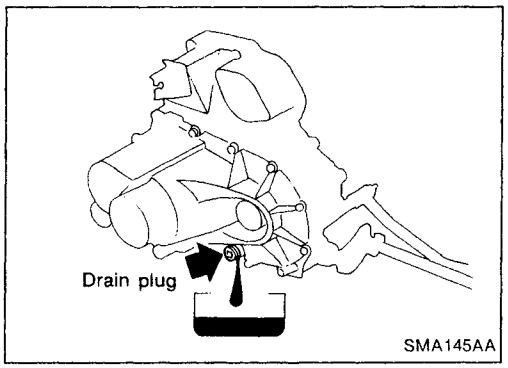

Changing M/T Oil

1. Drain oil from drain plug and refill with new gear oil.
2. Check oil level. (Refer to "Checking M/T Oil".)

Oil grade:
API GL-4
Viscosity:
See "RECOMMENDED FLUIDS AND LUBRICANTS", MA-14.
Capacity:

RS5F30A	**2.8 - 3.0ℓ (4-7/8 - 5-1/4 Imp pt)**
RS5F31A	**2.9 - 3.2ℓ (5-1/8 - 5-5/8 Imp pt)**
RS5F32A	**3.7 - 3.9ℓ (6-1/2 - 6-7/8 Imp pt)**

Drain plug:
: 15 - 20 N·m (1.5 - 2.0 kg-m, 11 - 14 ft-lb)

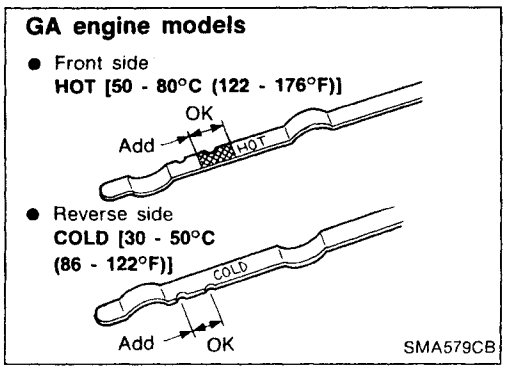

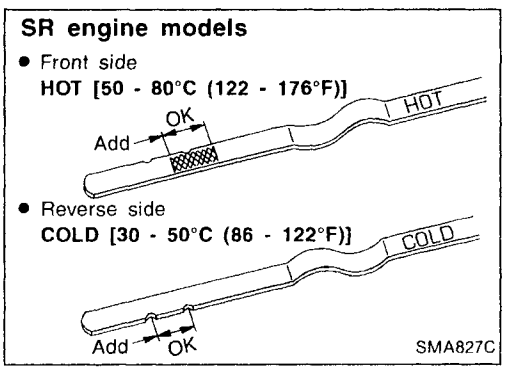

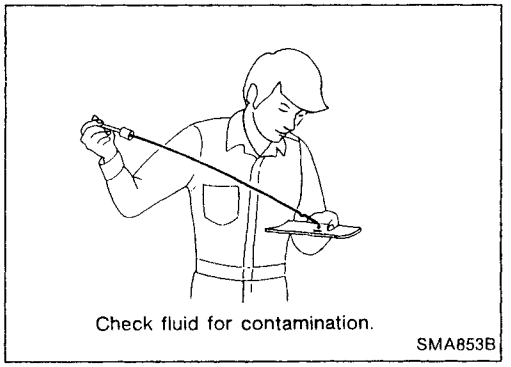

Checking A/T Fluid Level

1. Warm up engine.
2. Check for fluid leakage.
3. Before driving, fluid level can be checked at fluid temperatures of 30 to 50°C (86 to 122°F) using "COLD" range on dipstick.

a. Park vehicle on level surface and set parking brake.
b. Start engine and move selector lever through each gear position. Leave selector lever in "P" position.
c. Check fluid level with engine idling.
d. Remove dipstick and note reading. If level is at low side of either range, add fluid to the charging pipe.
e. Re-insert dipstick into charging pipe as far as it will go.
f. Remove dipstick and note reading. If reading is at low side of range, add fluid to the charging pipe. Do not overfill.

4. Drive vehicle for approximately 5 minutes in urban areas.
5. Re-check fluid level at fluid temperatures of 50 to 80°C (122 to 177°F) using "HOT" range on dipstick.
6. Check fluid condition. If fluid is very dark or smells burned, or contains friction material (clutches, band, etc.), check operation of A/T. Refer to AT section for checking operation of A/T.

Simpo PDF Merge and Split Unregistered Version - http://www.simpopdf.com

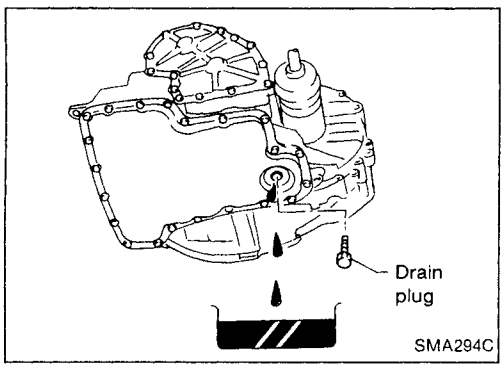

Changing A/T Fluid

1. Warm up A/T fluid.
2. Stop engine.
3. Drain A/T fluid from drain plug and refill with new A/T fluid. Always refill with same volume as drained fluid.
   Fluid grade:
   Genuine Nissan ATF or equivalent
   See "RECOMMENDED FLUIDS AND LUBRICANTS", MA-14.
   Fluid capacity (With torque converter):
   7.0ℓ (6-1/8 Imp qt)
   Drain plug:
   : 29 - 39 N·m (3.0 - 4.0 kg-m, 22 - 29 ft-lb)
4. Run engine at idle speed for five minutes.
5. Check fluid level and condition. Refer to "Checking A/T Fluid". If fluid is still dirty, repeat steps 2 through 5.

MA

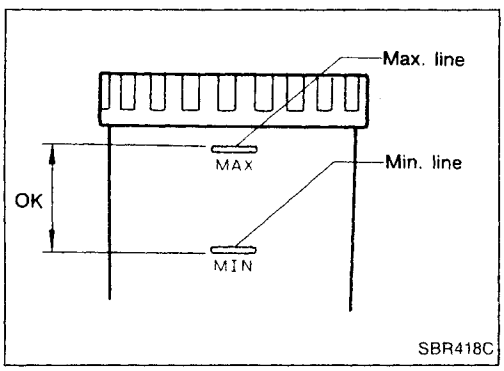

Checking Brake Fluid Level and Leaks

If fluid level is extremely low, check brake system for leaks.

Checking Brake System

Check brake fluid lines and parking brake cables for improper attachment and for leaks, chafing, abrasions, deterioration, etc.

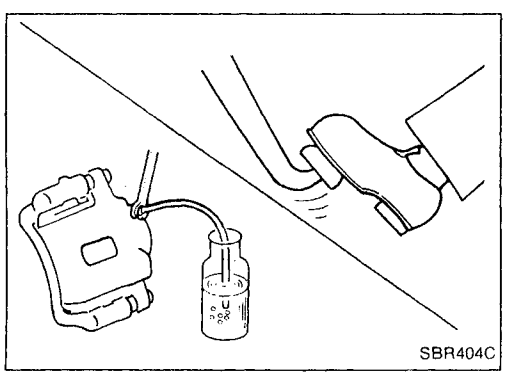

Changing Brake Fluid

1. Drain brake fluid from each air bleeder valve.
2. Refill until new brake fluid comes out from each air bleeder valve.
   Use same procedure as in bleeding hydraulic system to refill brake fluid.
   Refer to "CHECK AND ADJUSTMENT" in BR section.

- **Refill with recommended brake fluid.**
  See "RECOMMENDED FLUIDS AND LUBRICANTS".
- **Never reuse drained brake fluid.**
- **Be careful not to splash brake fluid on painted areas.**

Simpo PDF Merge and Split Unregistered Version - http://www.simpopdf.com

Checking Brake Booster, Vacuum Hoses, Connections and Check Valve

Check vacuum lines, connections and check valve for improper attachment, air tightness, chafing and deterioration.

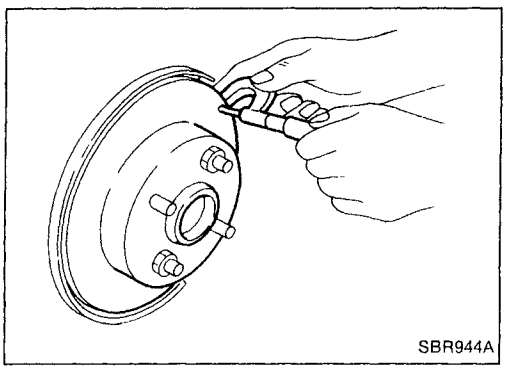
SBR944A

Checking Disc Brake

Check condition of disc brake components.

ROTOR

Check condition and thickness.

Standard thickness:
- **CL22VD and CL22VE 18.0 mm (0.709 in)**
- **AD22VF 26.0 mm (1.024 in)**
- **CL7HB 7.0 mm (0.276 in)**
- **CL9HC 9.0 mm (0.354 in)**

Minimum thickness:
- **CL22VD and CL22VE 16.0 mm (0.630 in)**
- **AD22VF 24 mm (0.945 in)**
- **CL7HB 6.0 mm (0.236 in)**
- **CL9HC 8.0 mm (0.315 in)**

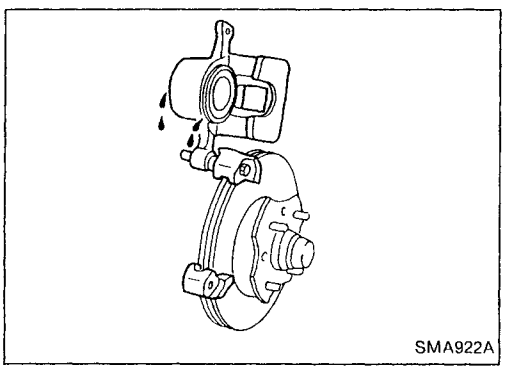
SMA922A

CALIPER

Check for leakage.

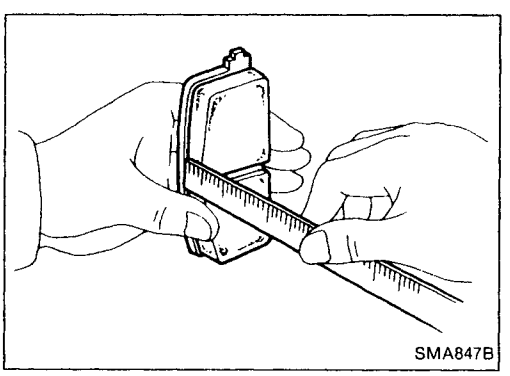
SMA847B

PAD

Check for wear or damage.

Standard thickness:
- **CL22VD and CL22VE 11.0 mm (0.433 in)**
- **AD22VF 10.0 mm (0.394 in)**
- **CL7HB and CL9HC 10.0 mm (0.394 in)**

Minimum thickness:
- **CL22VD, CL22VE and AD22VF 2.0 mm (0.079 in)**
- **CL7HB and CL9HC 1.5 mm (0.059 in)**

Simpo PDF Merge and Split Unregistered Version - http://www.simpopdf.com

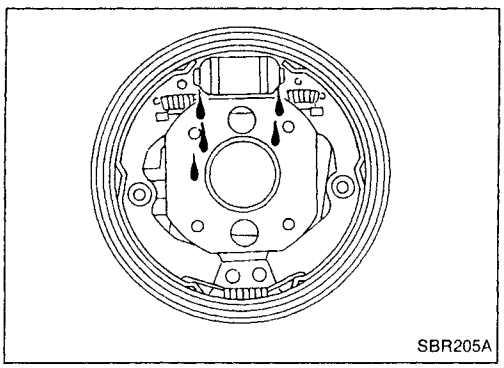
SBR205A

Checking Drum Brake

Check condition of drum brake components.

WHEEL CYLINDER

Check for leakage.

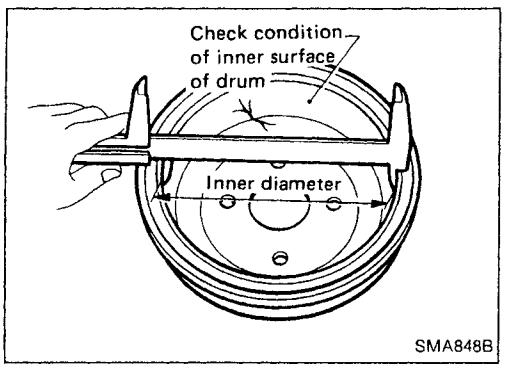

SMA848B

DRUM

Check condition of inner surface.

Standard diameter:
180.0 mm (7.09 in)
Drum repair limit (Inner diameter):
181.0 mm (7.13 in)

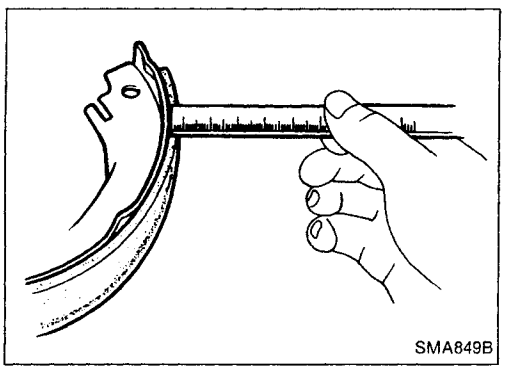
SMA849B

LINING

Check for wear or damage.

Standard thickness:
4.0 mm (0.157 in)
Lining wear limit (Minimum thickness):
1.5 mm (0.059 in)

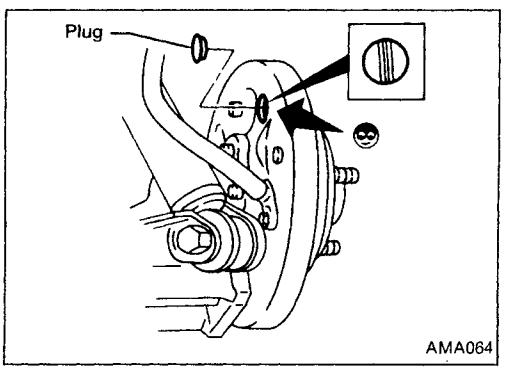

AMA064

TEMPORARY METHOD FOR CHECKING LINING WEAR

Remove inspection hole plug and check for lining wear.

Balancing Wheels

- Adjust wheel balance using road wheel center.
  Wheel balance (Maximum allowable unbalance):
  Refer to SDS (MA-56).

Simpo PDF Merge and Split Unregistered Version - http://www.simpopdf.com

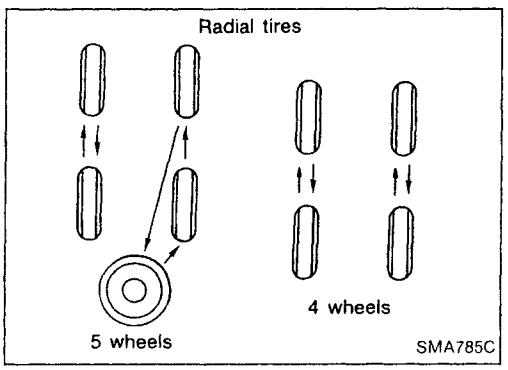

Tire Rotation

- Do not include the T-type spare tire when rotating the tires.

Wheel nuts:

: 98 - 118 N·m (10.0 - 12.0 kg-m, 72 - 87 ft-lb)

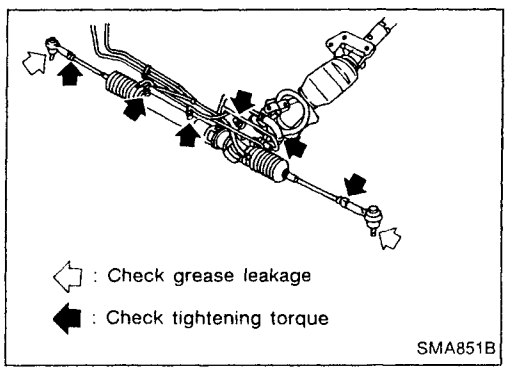

Checking Steering Gear and Linkage

STEERING GEAR

- Check gear housing and boots for looseness, damage or grease leakage.
- Check connection with steering column for looseness.

STEERING LINKAGE

- Check ball joint, dust cover and other component parts for looseness, wear, damage or grease leakage.

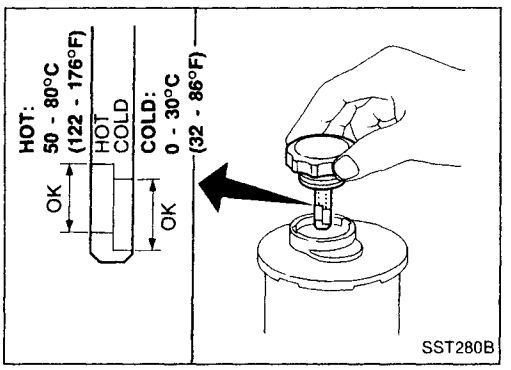

Checking Power Steering Fluid and Lines

- Check fluid level with engine off.
- Check fluid level using dipstick on reservoir cap, or referring to the scale on reservoir tank. Use "HOT" range at fluid temperatures of 50 to 80°C (122 to 176°F). Use "COLD" range at fluid temperatures of 0 to 30°C (32 to 86°F).

CAUTION:

- **Do not overfill.**
- **Recommended fluid is Automatic Transmission Fluid "DEXRON™" type or equivalent.**

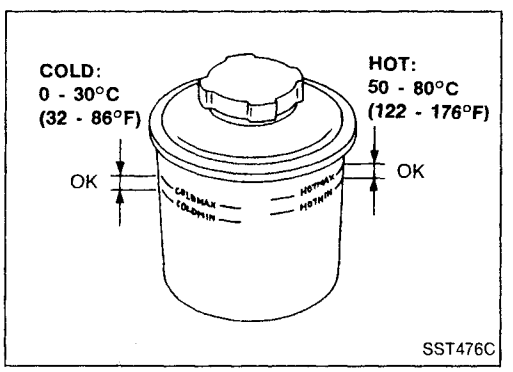

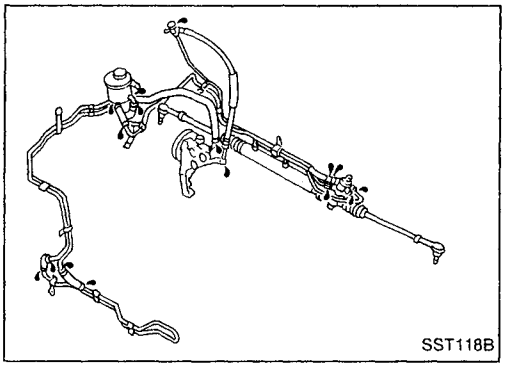

- Check lines for improper attachment, leaks, cracks, damage, loose connections, chafing and deterioration.
- Check rack boots for accumulation of power steering fluid.

Simpo PDF Merge and Split Unregistered Version - http://www.simpopdf.com

Lubricating Locks, Hinges and Hood Latches

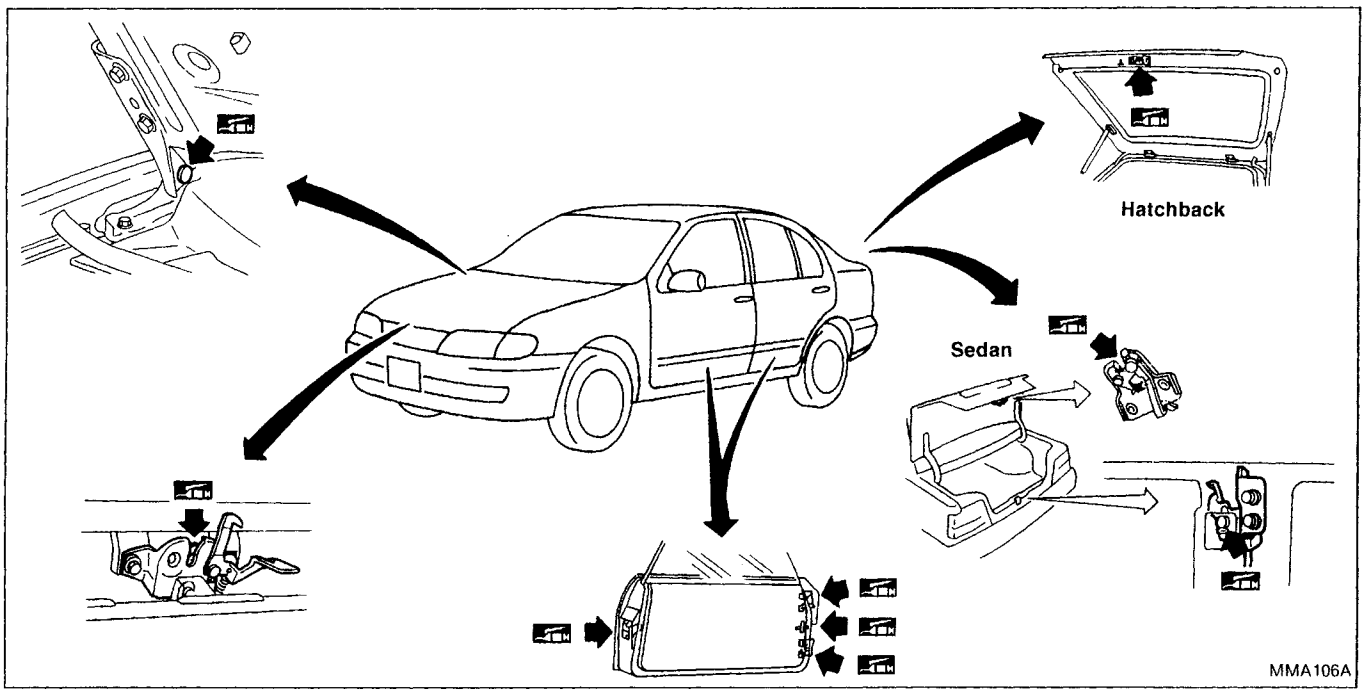

Checking Seat Belts, Buckles, Retractors, Anchors and Adjusters

CAUTION:

- After any collision, inspect all seat belt assemblies, including retractors and other attached hardwares (i.e. guide rail set). Nissan recommends to replace all seat belt assemblies in use during a collision, unless not damaged and properly operating after minor collision.
  Also inspect seat belt assemblies not in use during a collision, and replace if damaged or improperly operating.
- If any component of seat belt assembly is questionable, do not repair.
  Replace as seat belt assembly.
- If webbing is cut, frayed, or damaged, replace belt assembly.
- Never oil tongue and buckle.
- Use a genuine seat belt assembly.

For seat belt pre-tensioner, refer to section RS.

Anchor bolt
43 - 55 N·m
(4.4 - 5.6 kg-m, 32 - 41 ft-lb)

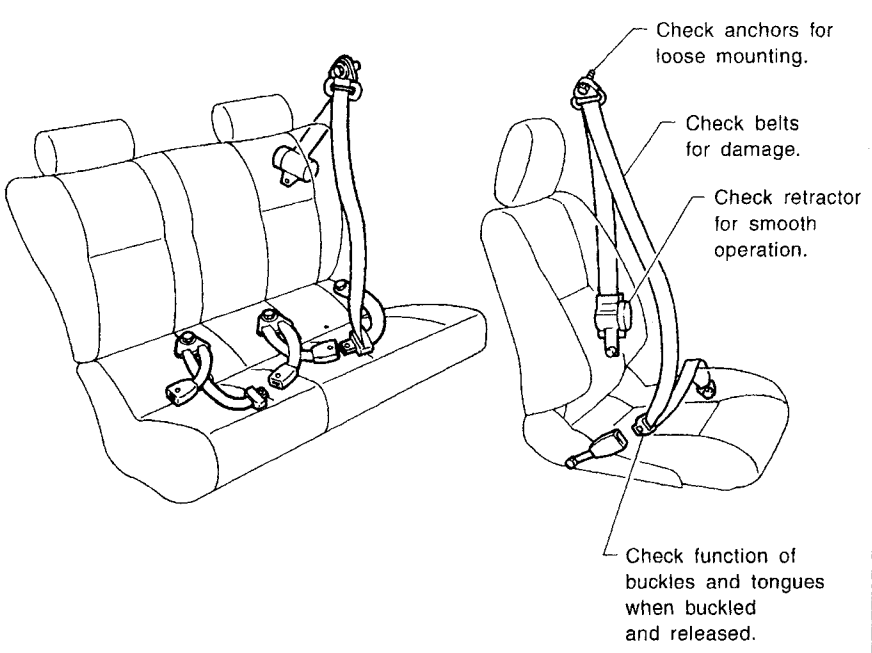

Simpo PDF Merge and Split Unregistered Version - http://www.simpopdf.com

Checking Body Corrosion

Visually check the body sheet metal panel for corrosion, paint damage (scratches, chipping, rubbing, etc.) or damage to the anti-corrosion materials. In particular, check the following locations.

Hemmed portion

Hood front end, door lower end, trunk lid rear end, etc.

Panel joint

Side sill of rear fender and center pillar, rear wheel housing of rear fender, around strut tower in engine compartment, etc.

Panel edge

Trunk lid opening, sunroof opening, fender wheelarch flange, fuel filler lid flange, around holes in panel, etc.

Parts contact

Waist molding, windshield molding, bumper, etc.

Protectors

Damage or condition of mudguard, fender protector, chipping protector, etc.

Anti-corrosion materials

Damage or separation of anti-corrosion materials under the body.

Drain holes

Condition of drain holes at door and side sill.

When repairing corroded areas, refer to the Corrosion Repair Manual.

Simpo PDF Merge and Split Unregistered Version - http://www.simpopdf.com

Engine Maintenance

INSPECTION AND ADJUSTMENT

Drive belt deflection

GA14DE engine except for Europe

Unit: mm (in)

	Used belt deflection		Deflection of new belt
	Limit	Deflection after adjustment	
Alternator			
With air conditioner compressor	10 (0.39)	6 - 7 (0.24 - 0.28)	5.5 - 6.5 (0.217 - 0.256)
Without air conditioner compressor	11 (0.43)	7 - 9 (0.28 - 0.35)	6 - 8 (0.24 - 0.31)
Power steering oil pump	7.5 (0.295)	4 - 6 (0.16 - 0.24)	3 - 5 (0.12 - 0.20)
Applied pushing force	98 N (10 kg, 22 lb)		

GA14DE engine for Europe

Unit: mm (in)

	Used belt deflection		Deflection of new belt
	Limit	Deflection after adjustment	
Alternator			
With power steering	11 (0.43)	7 - 9 (0.28 - 0.35)	6 - 8 (0.24 - 0.31)
Without power steering	10 (0.39)		
Air conditioner compressor	9.5 (0.374)	6 - 8 (0.24 - 0.31)	5 - 7 (0.20 - 0.28)
Power steering oil pump	7.5 (0.295)	4 - 6 (0.16 - 0.24)	3 - 5 (0.12 - 0.20)
Applied pushing force	98 N (10 kg, 22 lb)		

Engine oil capacity (Refill capacity)

Unit: ℓ (Imp qt)

With oil filter change	3.2 (2-7/8)
Without oil filter change	2.8 (2-1/2)

Coolant capacity (Refill capacity)

With reservoir tank

Unit: ℓ (Imp qt)

	With heater	Without heater
M/T	5.9 (5-1/4)	5.6 (4-7/8)
A/T	6.4 (5-5/8)	6.1 (5-3/8)

Spark plug

	GA16DE & GA14DE engine for Europe and Israel	GA16DE & GA15DE engine except for Europe and Israel
Type		
Standard	BKR5E	BKR5E-11
Cold	BKR6E, BKR7E	BKR6E-11, BKR7E-11
Plug gap mm (in)	0.8 - 0.9 (0.031 - 0.035)	1.0 - 1.1 (0.039 - 0.043)

Simpo PDF Merge and Split Unregistered Version - http://www.simpopdf.com

Engine Maintenance

INSPECTION AND ADJUSTMENT

Drive belt deflection

Unit: mm (in)

	Used belt deflection		Deflection of new belt
	Limit	Deflection after adjustment	
Alternator			
With air conditioner compressor	11.5 - 12.5 (0.453 - 0.492)	7 - 8 (0.28 - 0.31)	6.5 - 7.5 (0.256 - 0.295)
Without air conditioner compressor	12 - 13 (0.47 - 0.51)	8 - 9 (0.31 - 0.35)	7 - 8 (0.28 - 0.31)
Power steering oil pump	6 - 7 (0.24 - 0.28)	4 - 5 (0.16 - 0.20)	3.5 - 4.5 (0.138 - 0.177)
Applied pushing force	98 N (10 kg, 22 lb)		

Engine oil capacity (Refill capacity)

Unit: ℓ (Imp qt)

With oil filter change	3.4 (3)
Without oil filter change	3.2 (2-7/8)

Coolant capacity (Refill capacity)

With reservoir tank

Unit: ℓ (Imp qt)

	With heater	Without heater
M/T	6.1 (5-3/8)	5.8 (5-1/8)
A/T	6.6 (5-7/8)	6.3 (5-1/2)
Reservoir tank	0.7 (5/8)	

Spark plug (Platinum-tipped type)

Make	NGK
Type	
Standard	PFR5B-11
Alternative	PFR6B-11 PFR7B-11

Simpo PDF Merge and Split Unregistered Version - http://www.simpopdf.com

Engine Maintenance

INSPECTION AND ADJUSTMENT

Drive belt deflection

Unit: mm (in)

	Used belt deflection		Deflection of new belt
	Limit	Deflection after adjustment	
Alternator	14 (0.55)	11 - 13 (0.43 - 0.51)	9 - 11 (0.35 - 0.43)
Air conditioner compressor	14 (0.55)	11 - 13 (0.43 - 0.51)	9 - 11 (0.35 - 0.43)
Power steering oil pump	8 (0.31)	5 - 7 (0.20 - 0.28)	4 - 6 (0.16 - 0.24)
Water pump without power steering	—	8 (0.31)	6 (0.24)
Applied pushing force	98 N (10 kg, 22 lb)		

Coolant capacity (Refill capacity)

Unit: ℓ (Imp qt)

With heater	5.2 (4-5/8)
Without heater	4.9 (4-3/8)
Reservoir tank	0.7 (5/8)

Cooling system check

Unit: kPa (bar, kg/cm^2, psi)

Radiator cap relief pressure	
Standard	78 - 98 (0.78 - 0.98, 0.8 - 1.0, 11 - 14)
Limit	59 - 98 (0.59 - 0.98, 0.6 - 1.0, 9 - 14)
Radiator testing pressure	157 (1.57, 1.6, 23)

Engine oil capacity (Refill capacity)

Unit: ℓ (Imp qt)

Without oil filter	4.6 (4)
With oil filter	5.1 (4-1/2)

Injection nozzle

Unit: kPa (bar, kg/cm^2, psi)

Injection pressure	12,749 (127.5, 130, 1,849)

Idle speed

Unit: rpm

	Standard	—
M/T	700^{+50}_{-0}	800*

*: Air conditioner "ON"

TIGHTENING TORQUE

Unit	N·m	kg-m	ft-lb	in-lb
Manifold nuts & bolts	18 - 22	1.8 - 2.2	13 - 16	—
Rocker cover screw	2 - 4	0.2 - 0.4	1.4 - 2.9	17 - 35
Alternator, power steering mounting bolt	62 - 75	6.3 - 7.6	46 - 55	—
Alternator, power steering adjuster lock bolt	16 - 21	1.6 - 2.1	12 - 15	—
Cylinder block drain plug	54 - 74	5.5 - 7.5	40 - 54	—
Engine oil pan drain plug	29 - 39	3.0 - 4.0	22 - 29	—
Injector (To head)	59 - 69	6.0 - 7.0	43 - 51	—
Spill tube	39 - 49	4.0 - 5.0	29 - 36	—
Delivery tube	22 - 25	2.2 - 2.5	16 - 18	—

Simpo PDF Merge and Split Unregistered Version - http://www.simopdf.com

Chassis and Body Maintenance

INSPECTION AND ADJUSTMENT

Wheel balance

Maximum allowable unbalance	Dynamic (At rim flange) g (oz)	10 (0.35) (one side)
	Static g (oz)	20 (0.71)

Simpo PDF Merge and Split Unregistered Version - http://www.simpopdf.com

MANUAL TRANSAXLE

SECTION MT

CONTENTS

PREPARATION 2
- Special Service Tools 2
- Commercial Service Tools 4

ON-VEHICLE SERVICE 5
- Replacing Oil Seal 5
- Position Switch Check 6

REMOVAL AND INSTALLATION 7
- Removal 7
- Installation 8

TRANSAXLE GEAR CONTROL 9

RS5F30A & RS5F31A

MAJOR OVERHAUL 10
- Case Components 10
- Gear Components 11
- Shift Control Components 12

DISASSEMBLY 13

REPAIR FOR COMPONENT PARTS 16
- Input Shaft and Gears 16
- Mainshaft and Gears 19
- Final Drive 23
- Shift Control Components 25
- Case Components 25

ADJUSTMENT 28
- Differential Side Bearing Preload 28
- Mainshaft Bearing Preload 29

ASSEMBLY 30

RS5F32A

MAJOR OVERHAUL 33
- Case Components 33
- Gear Components 34
- Shift Control Components 35

DISASSEMBLY 36

REPAIR FOR COMPONENT PARTS 39
- Input Shaft and Gears 39
- Mainshaft and Gears 42
- Final Drive 47
- Shift Control Components 49
- Case Components 51

ADJUSTMENT 54
- Differential Side Bearing Preload 54

ASSEMBLY 56

RS5F30A & RS5F31A & RS5F32A

SERVICE DATA AND SPECIFICATIONS (SDS) 60
- General Specifications 60
- Inspection and Adjustment — RS5F30A & RS5F31A 61
- Inspection and Adjustment — RS5F32A 64

Simpo PDF Merge and Split Unregistered Version - http://www.simpopdf.com

Special Service Tools

Tool number Tool name	Description	
KV38105900·For F30A & F31A KV38107700·For F32A Preload adapter	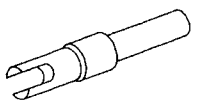 NT087	Measuring turning torque of final drive assembly Measuring total turning torque Measuring clearance between side gear and differential case with washer Selecting differential side bearing adjusting shim (Use with KV38106000.)
KV38106000 Height gauge adapter (differential side bearing)	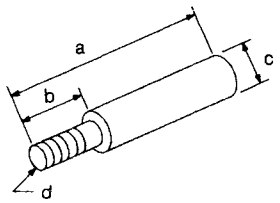 NT418	Selecting differential side bearing adjusting shim (Use with KV38105900 or KV38107700.) **a: 140 mm (5.51 in)** **b: 40 mm (1.57 in)** **c: 16 mm (0.63 in) dia.** **d: M8 x 1.25P**
KV32101000 Pin punch	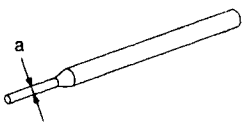 NT410	Removing and installing retaining pin **a: 4 mm (0.16 in) dia.**
ST22730000 Puller	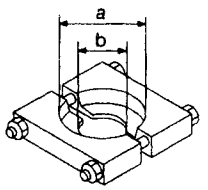 NT411	Removing mainshaft front and rear bearing inner race (F30A & F31A) Removing 5th main gear **a: 82 mm (3.23 in) dia.** **b: 30 mm (1.18 in) dia.**
ST30031000 Puller	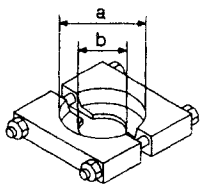 NT411	Removing differential side bearing inner race (F30A & F31A) Removing 3rd and 4th synchronizer Measuring wear of 2nd & 3rd baulk ring (F32A) **a: 90 mm (3.54 in) dia.** **b: 50 mm (1.97 in) dia.**
ST30021000 Puller	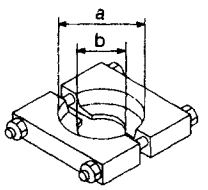 NT411	Removing 5th synchronizer **a: 110 mm (4.33 in) dia.** **b: 68 mm (2.68 in) dia.**
ST33290001 Puller	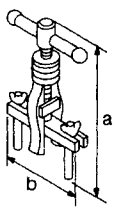 NT414	Removing differential oil seal Removing mainshaft front bearing outer race (F30A & F31A) Removing differential side bearing outer race **a: 250 mm (9.84 in)** **b: 160 mm (6.30 in)**

Simpo PDF Merge and Split Unregistered Version - http://www.simpopdf.com

Special Service Tools (Cont'd)

Tool number Tool name	Description	
ST33400001 Drift	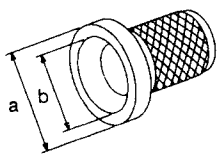 NT086	Installing differential oil seal (F30A & F31A) **a: 60 mm (2.36 in) dia.** **b: 47 mm (1.85 in) dia.**
KV31103000 Drift	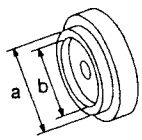 NT105	Installing differential oil seal (F32A) Right and left sides (Use with ST35325000.) **a: 56 mm (2.20 in) dia.** **b: 49 mm (1.93 in) dia.**
ST35325000 Drift handle	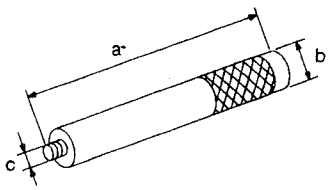 NT417	Installing differential oil seal (F32A) (Use with KV31103000.) **a: 215 mm (8.46 in)** **b: 25 mm (0.98 in) dia.** **c: M12 x 1.5P**
KV38102100 Drift	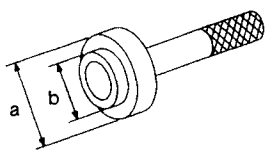 NT427	Installing input shaft rear bearing **a: 44 mm (1.73 in) dia.** **b: 24.5 mm (0.965 in) dia.**
ST33200000 Drift	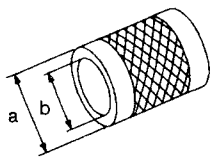 NT091	Installing mainshaft front bearing outer race (F30A & F31A) Installing mainshaft front bearing (F32A) **a: 60 mm (2.36 in) dia.** **b: 44.5 mm (1.752 in) dia.**
ST22350000 Drift	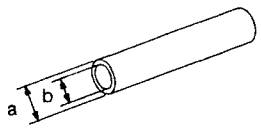 NT065	Installing input shaft front bearing **a: 34 mm (1.34 in) dia.** **b: 28 mm (1.10 in) dia.**
ST22452000 Drift	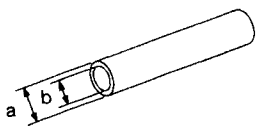 NT065	Installing 1st & 2nd synchronizer Installing 3rd & 4th synchronizer (F32A) **a: 45 mm (1.77 in) dia.** **b: 36 mm (1.42 in) dia.**
ST37750000 Drift	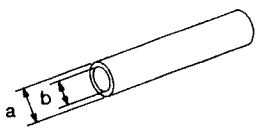 NT065	Installing 5th main gear Installing 3rd & 4th synchronizer Installing input shaft oil seal Installing 5th synchronizer (F30A & F31A) Installing mainshaft rear bearing (F32A) **a: 40 mm (1.57 in) dia.** **b: 31 mm (1.22 in) dia.**

Simpo PDF Merge and Split Unregistered Version - http://www.simpopdf.com

Special Service Tools (Cont'd)

Tool number Tool name	Description	
ST22360002 Drift	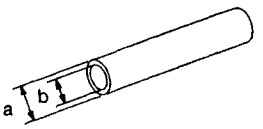 NT065	Installing mainshaft rear bearing inner race (F30A & F31A) **a: 29 mm (1.14 in) dia.** **b: 23 mm (0.91 in) dia.**
ST30621000 Drift	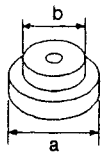 NT073	Installing differential side bearing outer race (Use with ST30611000.) **a: 79 mm (3.11 in) dia.** **b: 59 mm (2.32 in) dia.**
ST30611000 Drift handle	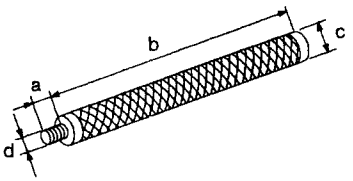 NT419	Installing differential side bearing outer race (Use with ST30621000.) **a: 15 mm (0.59 in)** **b: 335 mm (13.19 in)** **c: 25 mm (0.98 in) dia.** **d: M12 x 1.5P**

Commercial Service Tools

Tool name	Description	
Puller	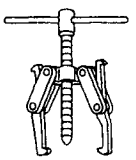 NT077	Removing input shaft front bearing (F30A & F31A) Removing mainshaft rear bearing (F32A)
Drift	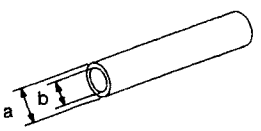 NT065	Installing mainshaft front bearing inner race **a: 26 mm (1.02 in) dia.** **b: 21 mm (0.83 in) dia. (F30A)** **a: 31 mm (1.22 in) dia.** **b: 26 mm (1.02 in) dia. (F31A & F32A)**
Drift	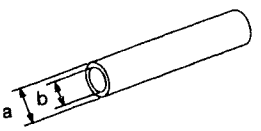 NT065	Installing differential side bearing inner race **a: 56 mm (2.20 in) dia.** **b: 50.5 mm (1.988 in) dia.**
Drift	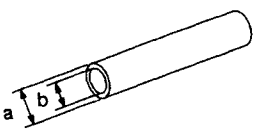 NT065	Installing striking rod oil seal **a: 38 mm (1.50 in) dia.** **b: 32 mm (1.26 in) dia.**

Simpo PDF Merge and Split Unregistered Version - http://www.simpopdf.com

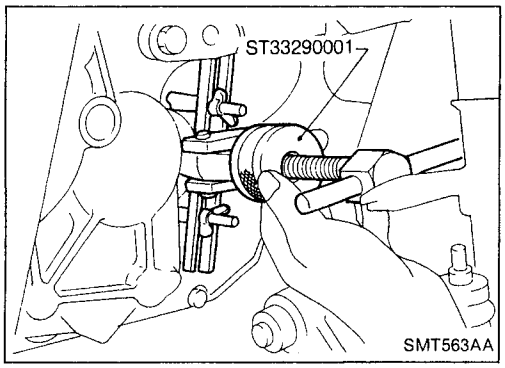

Replacing Oil Seal

DIFFERENTIAL OIL SEAL

1. Drain gear oil from transaxle.
2. Remove drive shafts. Refer to FA section ("Removal", "FRONT AXLE — Drive Shaft").
3. Remove differential oil seal.

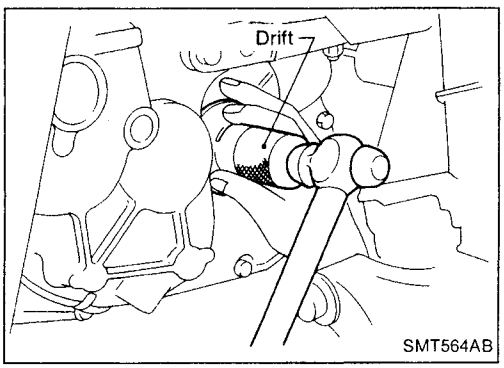

4. Install differential oil seal.
- **Apply multi-purpose grease to seal lip of oil seal before installing.**
5. Install drive shafts — Refer to FA section ("Installation", "FRONT AXLE — Drive Shaft").

MT

— F30A & F31A —

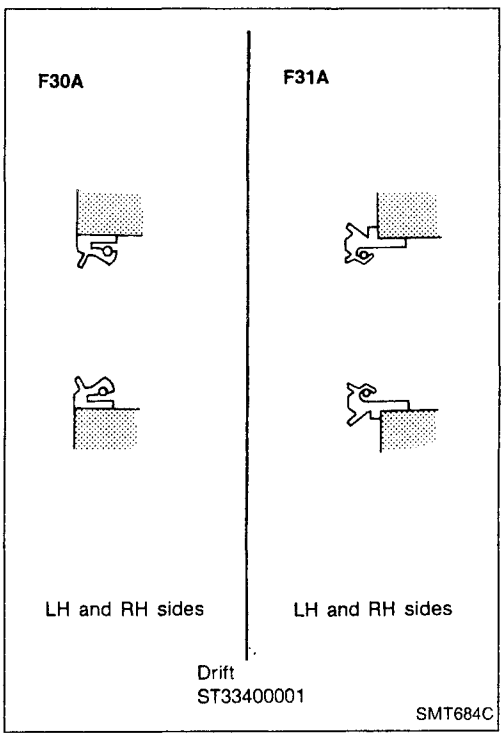

— F32A —

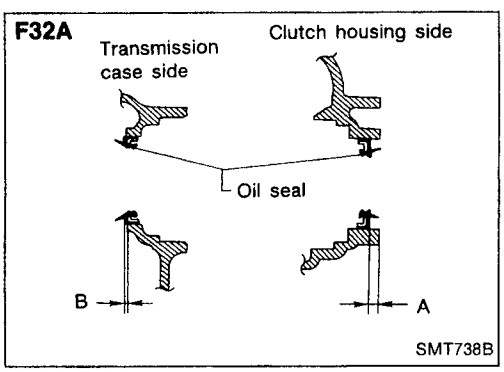

- **Install differential oil seal so that dimension "A" and "B" are within specifications.**

Unit: mm (in)

A	B
5.9 - 6.1 (0.232 - 0.240)	0.5 (0.020) or less

Simpo PDF Merge and Split Unregistered Version - http://www.simpopdf.com

Replacing Oil Seal (Cont'd)

STRIKING ROD OIL SEAL

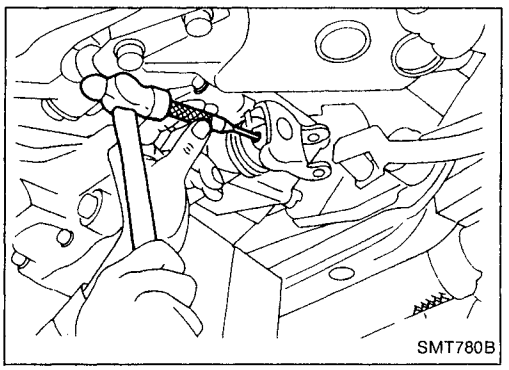
SMT780B

1. Remove transaxle control rod from yoke.
2. Remove yoke retaining pin.

● **Be careful not to damage boot.**

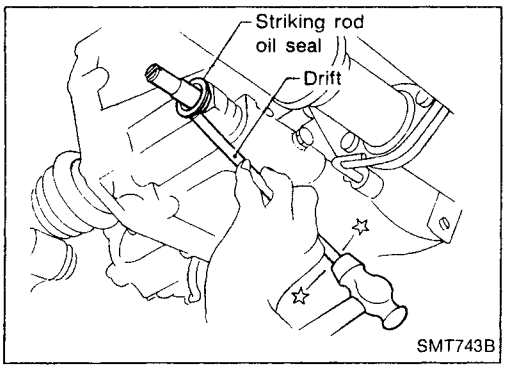

SMT743B

3. Remove striking rod oil seal.

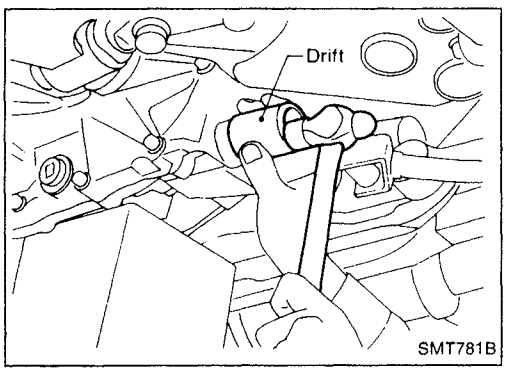

SMT781B

4. Install striking rod oil seal.

● **Apply multi-purpose grease to seal lip of oil seal before installing.**

Position Switch Check

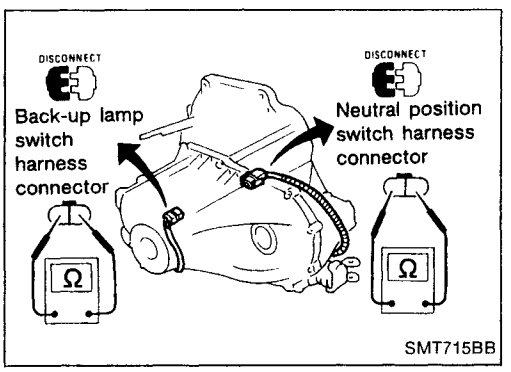

SMT715BB

● Check continuity.

Switch	Gear position	Continuity
Back-up lamp switch	Reverse	Yes
	Except reverse	No
Neutral position switch	Neutral	Yes
	Except neutral	No

Simpo PDF Merge and Split Unregistered Version - http://www.simpopdf.com

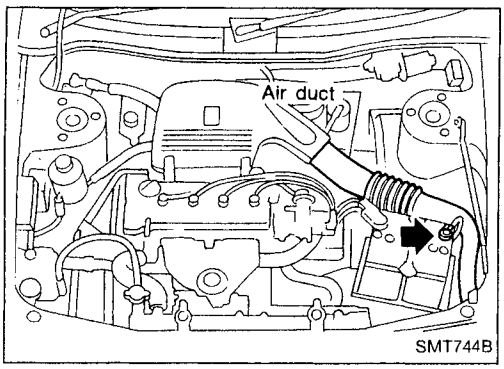

Removal

1. Remove battery negative terminal.
2. Remove air duct.

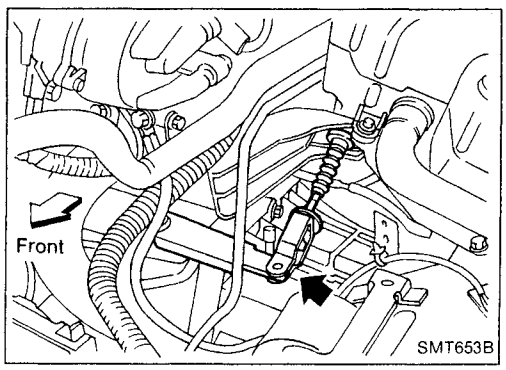

3. Disconnect clutch control cable. (Except for CD20 engine models)
   Remove clutch operating cylinder and clutch operating cylinder bracket from transaxle. (CD20 engine models)
4. Disconnect back-up lamp switch, neutral position switch, speedometer sensor and ground harness connectors.
5. Remove starter motor from transaxle.

MT

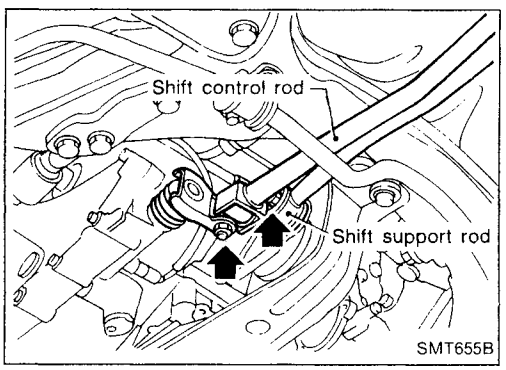

6. Remove shift control rod and support rod from transaxle.
7. Drain gear oil from transaxle.
8. Remove drive shafts. Refer to FA section (“Removal”, “FRONT AXLE — Drive Shaft”).

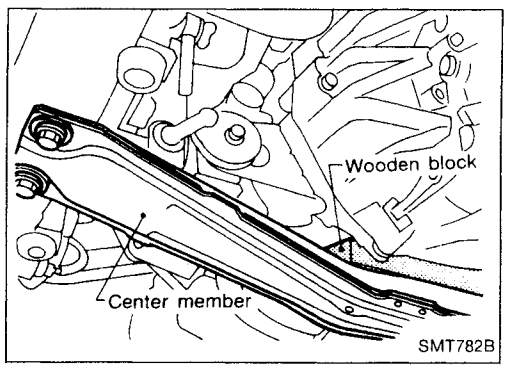

9. Jack up transaxle together with engine slightly and insert wooden block between center member and engine oil pan.

CAUTION:
Do not place jack under oil pan drain plug.

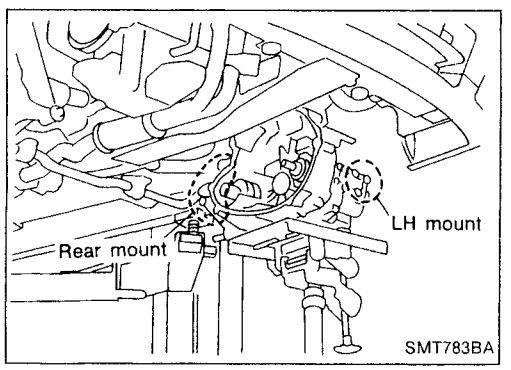

10. Remove rear and LH mounts supporting transaxle with jack.
11. Remove bolts securing transaxle.
12. Lower transaxle.

Simpo PDF Merge and Split Unregistered Version - http://www.simpopdf.com

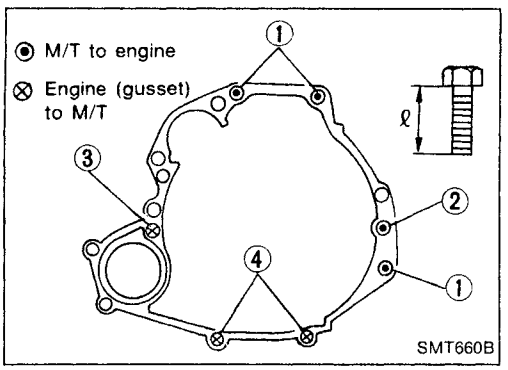

Installation

Tighten bolts securing transaxle and install any part removed.

- **GA engine models**

Bolt No.	Tightening torque N·m (kg-m, ft-lb)	"ℓ" mm (in)
①	30 - 40 (3.1 - 4.1, 22 - 30)	70 (2.76)
②	30 - 40 (3.1 - 4.1, 22 - 30)	85 (3.35)
③	30 - 40 (3.1 - 4.1, 22 - 30)	30 (1.18)
④	16 - 21 (1.6 - 2.1, 12 - 15)	25 (0.98)
Front gusset to engine	30 - 40 (3.1 - 4.1, 22 - 30)	20 (0.79)
Rear gusset to engine	16 - 21 (1.6 - 2.1, 12 - 15)	16 (0.63)

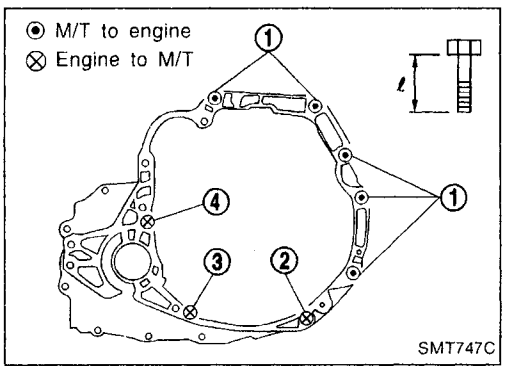

- **SR engine models**

Bolt No.	Tightening torque N·m (kg-m, ft-lb)	"ℓ" mm (in)
①	70 - 79 (7.1 - 8.1, 51 - 59)	55 (2.17)
②	30 - 40 (3.1 - 4.1, 22 - 30)	35 (1.38)
③	30 - 40 (3.1 - 4.1, 22 - 30)	45 (1.77)
④	70 - 79 (7.1 - 8.1, 51 - 59)	65 (2.56)

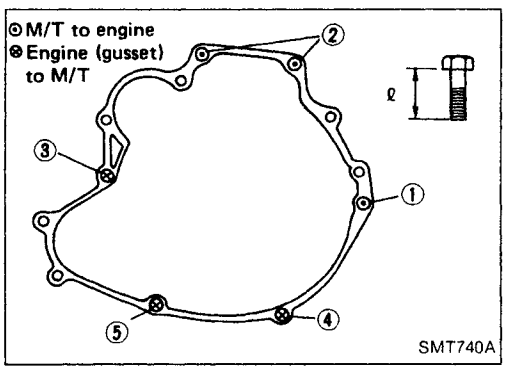

- **CD20 engine models**

Bolt No.	Tightening torque N·m (kg-m, ft-lb)	"ℓ" mm (in)
①	30 - 40 (3.1 - 4.1, 22 - 30)	120 (4.72)
②	30 - 40 (3.1 - 4.1, 22 - 30)	85 (3.35)
③	44 - 54 (4.5 - 5.5, 33 - 40)	75 (2.95)
④	16 - 21 (1.6 - 2.1, 12 - 15)	30 (1.18)
⑤	16 - 21 (1.6 - 2.1, 12 - 15)	25 (0.98)
Front gusset to engine	30 - 40 (3.1 - 4.1, 22 - 30)	35 (1.38)
Rear gusset to engine	30 - 40 (3.1 - 4.1, 22 - 30)	40 (1.57)

Simpo PDF Merge and Split Unregistered Version - http://www.simpopdf.com

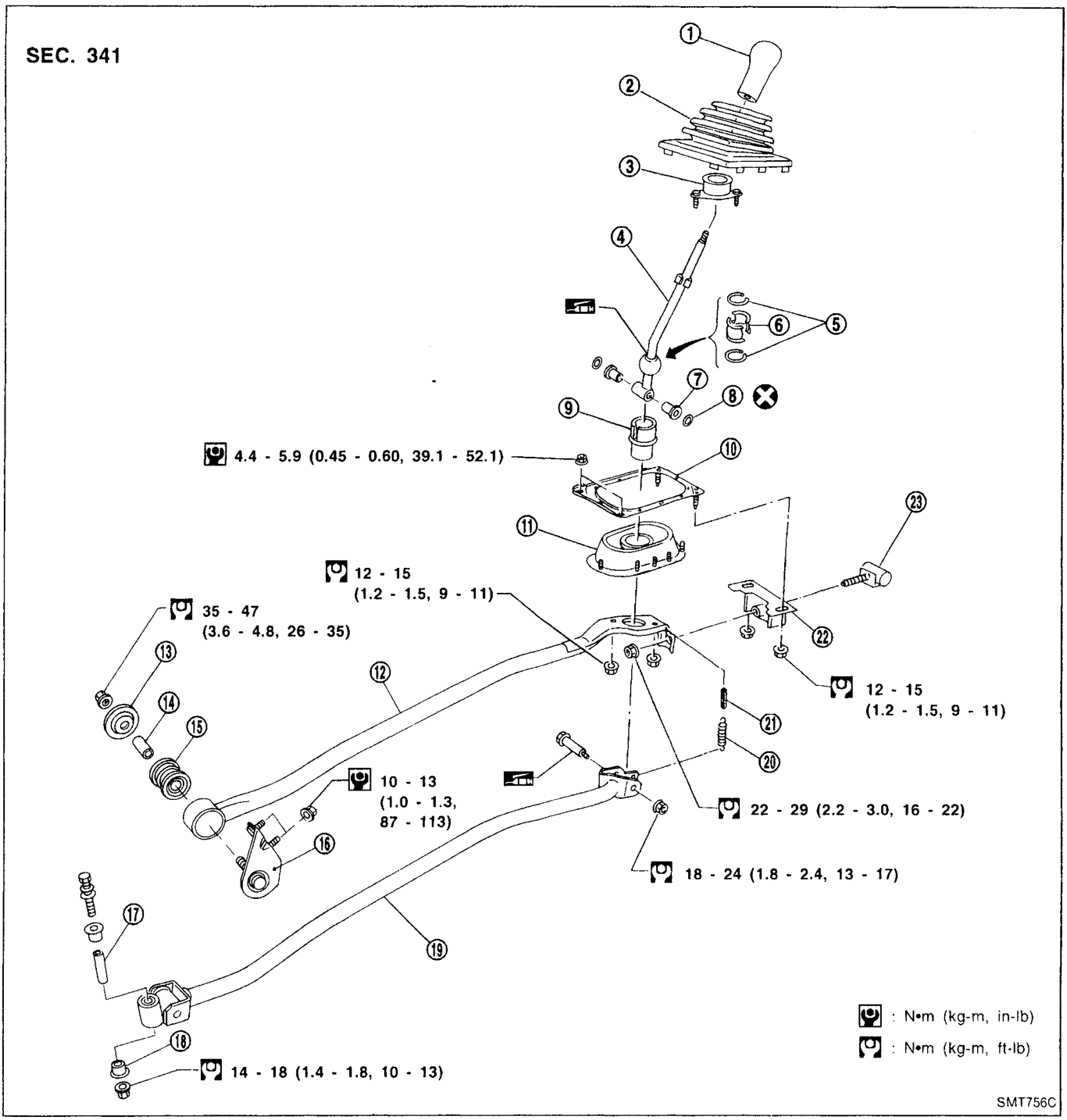

① Control lever knob
② Boot
③ Control lever socket
④ Control lever
⑤ Bearing seat spring
⑥ Seat
⑦ Bushing
⑧ O-ring
⑨ Hand lever socket
⑩ Plate bolt
⑪ Transaxle hole cover
⑫ Support rod
⑬ Plate
⑭ Collar
⑮ Bushing
⑯ Support rod bracket
⑰ Collar
⑱ Bushing
⑲ Control rod
⑳ Return spring
㉑ Return spring rubber
㉒ Holder bracket
㉓ Mass damper (CD20 engine only)

Simpo PDF Merge and Split Unregistered Version - http://www.simpopdf.com

Case Components

SEC. 320

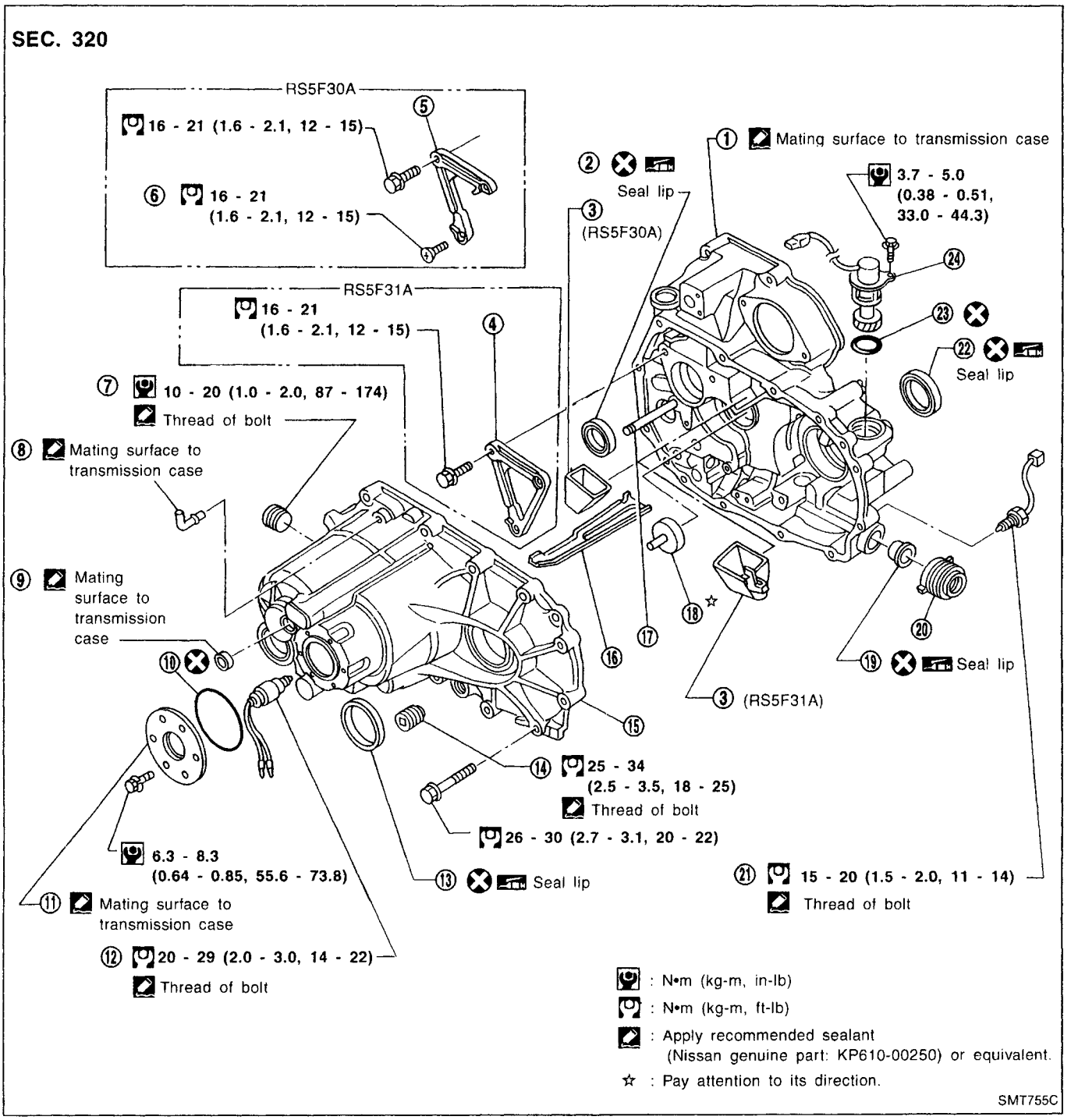

① Clutch housing
② Input shaft oil seal
③ Oil pocket
④ Bearing retainer
⑤ Bearing retainer
⑥ Torx screw
⑦ Filler plug
⑧ Air breather
⑨ Welch plug
⑩ O-ring
⑪ Case cover
⑫ Back-up lamp switch
⑬ Differential oil seal
⑭ Drain plug
⑮ Transmission case
⑯ Oil gutter
⑰ Reverse idler shaft
⑱ Oil channel
⑲ Striking rod oil seal
⑳ Boot
㉑ Neutral position switch (GA engine) or switch plug (CD engine)
㉒ Differential oil seal
㉓ O-ring
㉔ Speedometer pinion assembly

Simpo PDF Merge and Split Unregistered Version - http://www.simpopdf.com

Gear Components

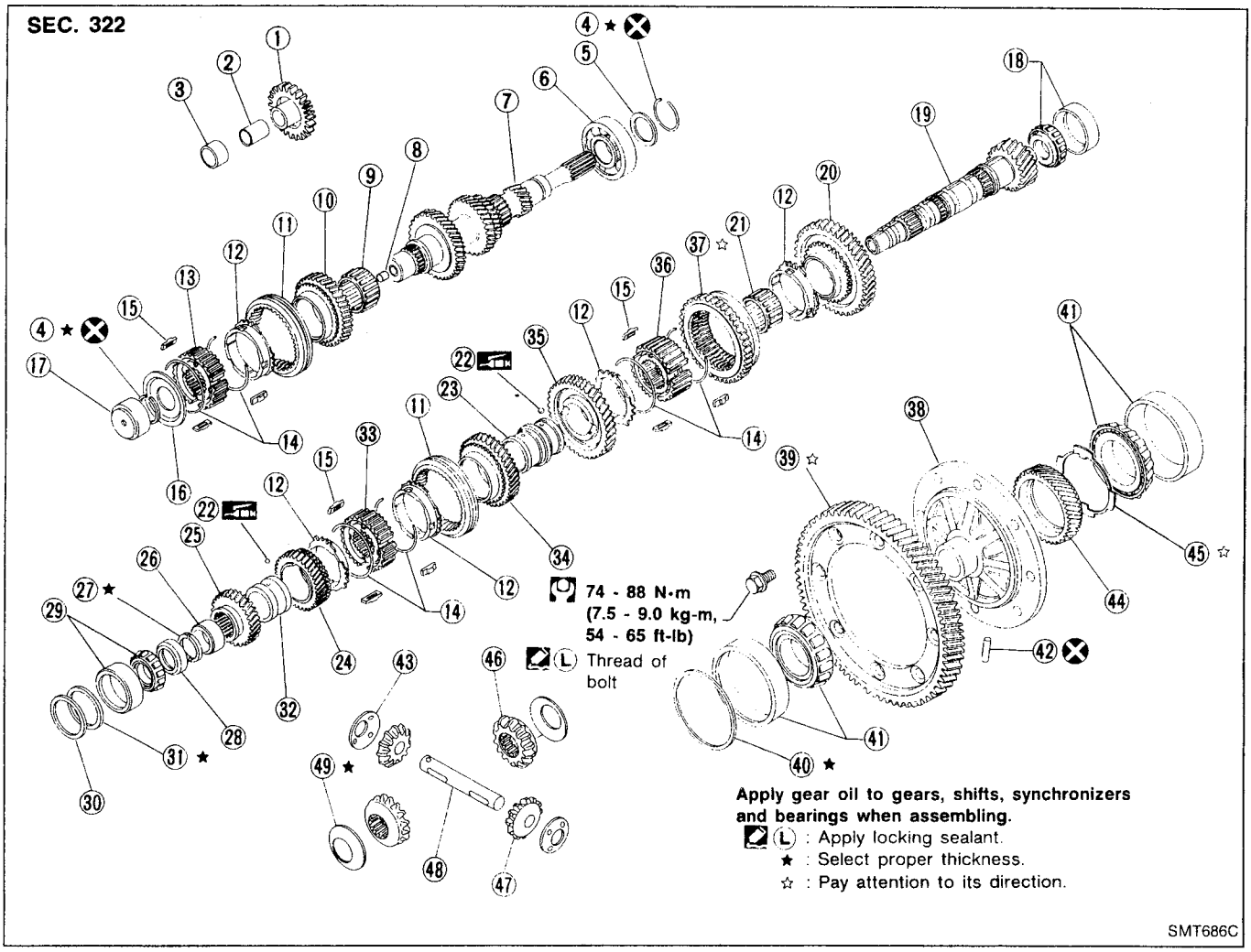

MT

① Reverse idler gear
② Reverse idler bushing
③ Reverse idler spacer
④ Snap ring
⑤ Spacer
⑥ Input shaft front bearing
⑦ Input shaft
⑧ Oil plug
⑨ 5th gear needle bearing
⑩ 5th input gear
⑪ Coupling sleeve
⑫ Baulk ring
⑬ 5th synchronizer hub
⑭ Spread spring
⑮ Shifting insert
⑯ 5th stopper
⑰ Input shaft rear bearing
⑱ Mainshaft front bearing
⑲ Mainshaft
⑳ 1st main gear
㉑ 1st gear needle bearing
㉒ Steel ball
㉓ 2nd & 3rd bushing
㉔ 4th main gear
㉕ 5th main gear
㉖ Thrust washer
㉗ Mainshaft C-ring
㉘ C-ring holder
㉙ Mainshaft rear bearing
㉚ Spacer
㉛ Mainshaft bearing adjusting shim
㉜ 4th bushing
㉝ 3rd & 4th synchronizer hub
㉞ 3rd main gear
㉟ 2nd main gear
㊱ 1st & 2nd synchronizer hub
㊲ Reverse main gear (Coupling sleeve)
㊳ Differential case
㊴ Final gear
㊵ Differential side bearing adjusting shim
㊶ Differential side bearing
㊷ Retaining pin
㊸ Pinion mate thrust washer
㊹ Speedometer drive gear
㊺ Speedometer stopper
㊻ Side gear
㊼ Pinion mate gear
㊽ Pinion mate shaft
㊾ Side gear thrust washer

Simpo PDF Merge and Split Unregistered Version - http://www.simpopdf.com

Shift Control Components

SEC. 328

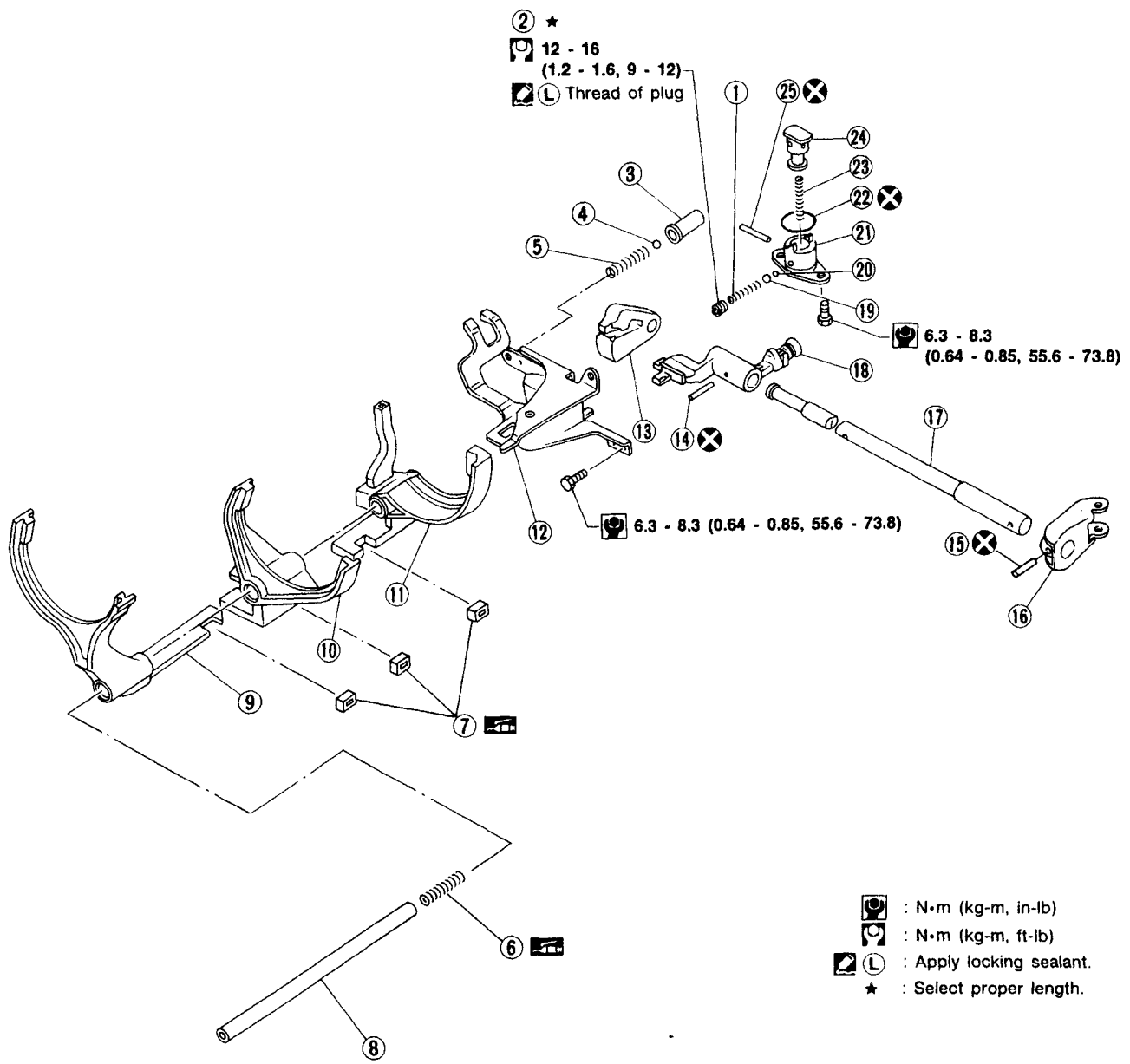

① Reverse check spring
② Reverse check plug
③ Check ball plug
④ Shift check ball
⑤ Shift check spring
⑥ Fork shaft support spring
⑦ Shifter cap
⑧ Fork shaft
⑨ 5th shift fork
⑩ 3rd & 4th shift fork
⑪ 1st & 2nd shift fork
⑫ Control bracket
⑬ Striking interlock
⑭ Retaining pin
⑮ Retaining pin
⑯ Yoke
⑰ Striking rod
⑱ Striking lever
⑲ Check ball (Large)
⑳ Check ball (Small)
㉑ Check sleeve
㉒ O-ring
㉓ Select return spring
㉔ Check plunger
㉕ Stopper pin

Simpo PDF Merge and Split Unregistered Version - http://www.simpopdf.com

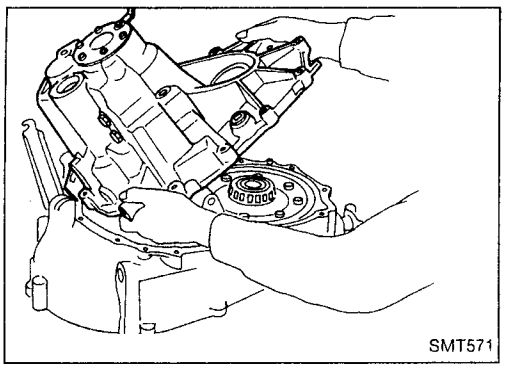
SMT571

1. Remove transmission case while slightly tilting it to prevent 5th shift fork from interfering with case.

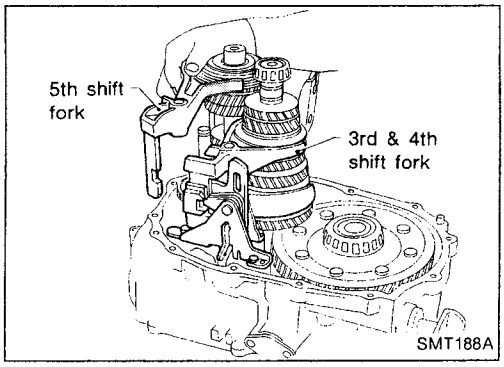

SMT188A

2. Draw out reverse idler spacer and fork shaft, then remove 5th and 3rd & 4th shift forks.
- **Be careful not to lose shifter cap.**

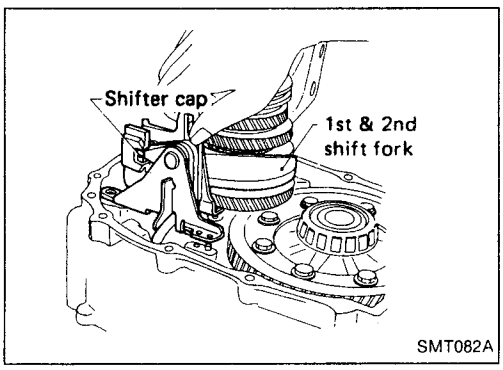

SMT082A

3. Remove control bracket with 1st & 2nd shift fork.
- **Be careful not to lose shifter cap.**

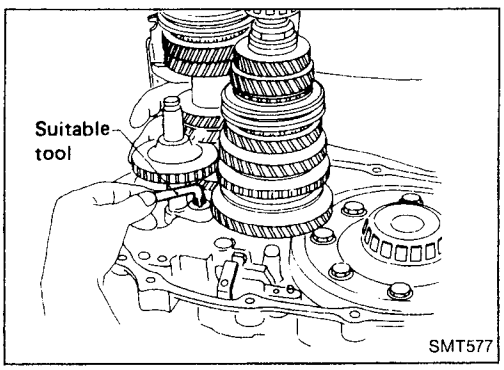

SMT577

4. Remove gear components from clutch housing.

— RS5F30A —

a. Remove three screws and detach bearing retainer.
- **One of these three screws is torx type and should be removed with a suitable tool, as shown.**

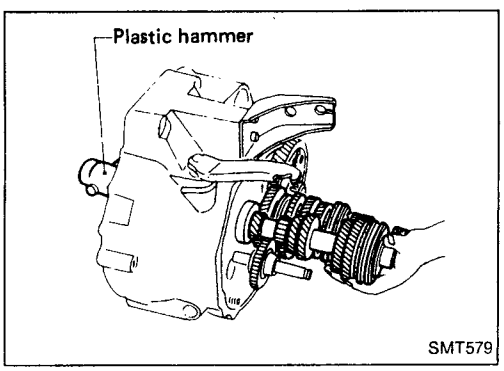

SMT579

b. Remove input shaft together with mainshaft by tapping lightly.
- **Always withdraw mainshaft straight out. Failure to do so can damage resin oil channel on clutch housing side.**
- **Do not draw out reverse idler shaft from clutch housing because these fittings will be loose.**
- **When removing input shaft, be careful not to scratch oil seal lip with shaft spline.**

MT

Simpo PDF Merge and Split Unregistered Version - http://www.simpopdf.com

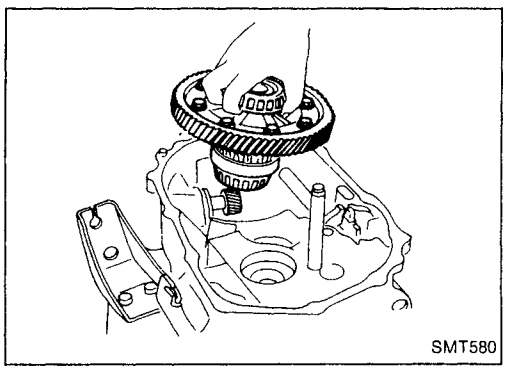
SMT580

c. Remove reverse idler gear and final drive assembly.

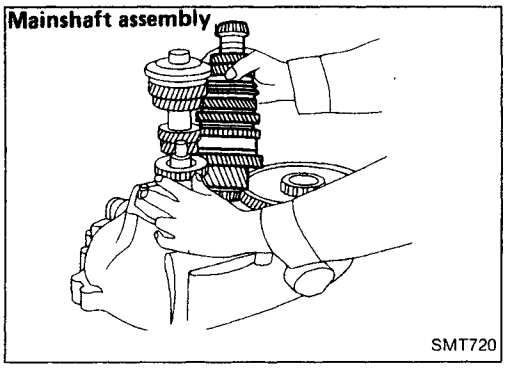

SMT720

— RS5F31A —

a. Remove mainshaft and final drive assembly.

- **Always withdraw mainshaft straight out. Failure to do so can damage resin oil channel on clutch housing side.**

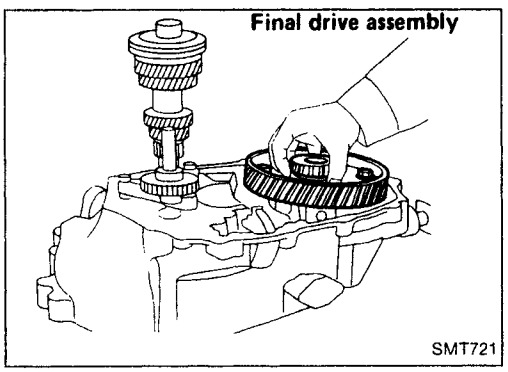

SMT721

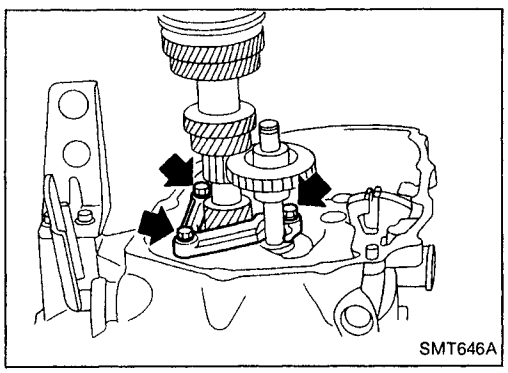
SMT646A

b. Remove bearing retainer securing bolts.

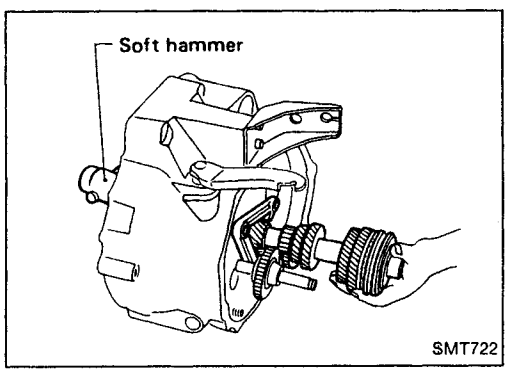

SMT722

c. Remove input shaft together with bearing retainer and reverse idler gear by tapping lightly.

- **Do not draw out reverse idler shaft from clutch housing because these fittings will be loose.**
- **Be careful not to scratch oil seal lip with shaft spline when removing input shaft.**

Simpo PDF Merge and Split Unregistered Version - http://www.simpopdf.com

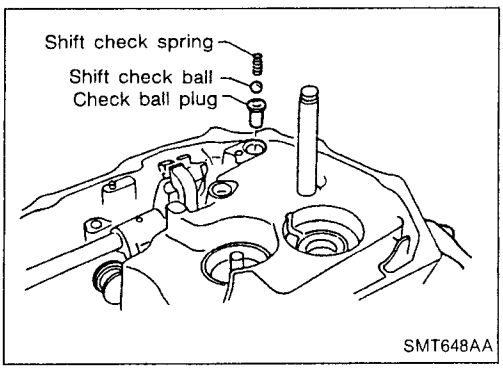

5. Remove oil pocket, shift check ball, shift check spring and check ball plug.

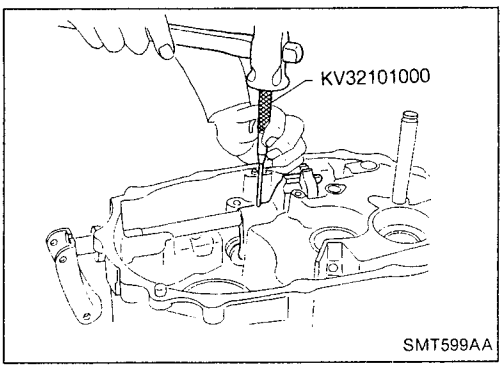

6. Drive retaining pin out of striking lever, then remove striking rod, striking lever and striking interlock.

- **Select a position where retaining pin does not interfere with clutch housing when removing retaining pin.**

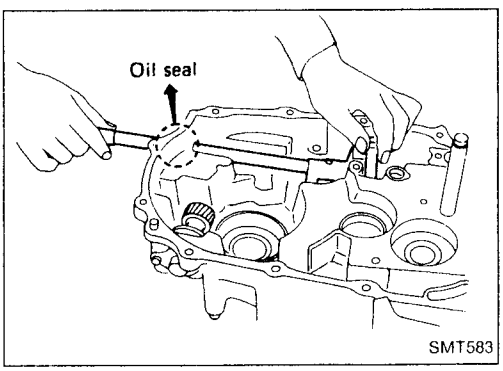

- **Be careful not to damage oil seal lip, when removing striking rod. If necessary, tape edges of striking rod.**

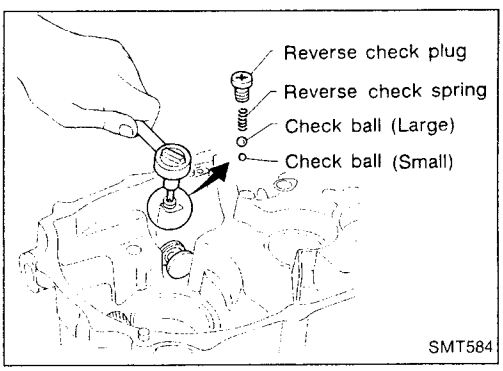

7. Remove reverse check plug, then detach reverse check spring and check balls.

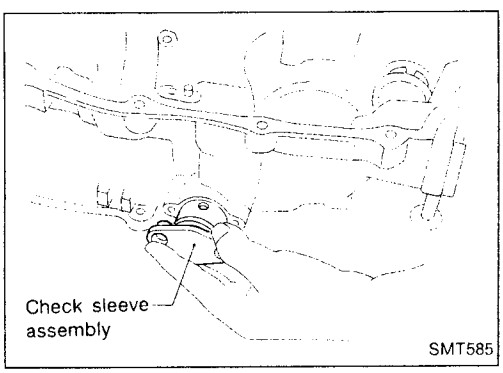

8. Remove check sleeve assembly.

MT

Simpo PDF Merge and Split Unregistered Version - http://www.simpopdf.com

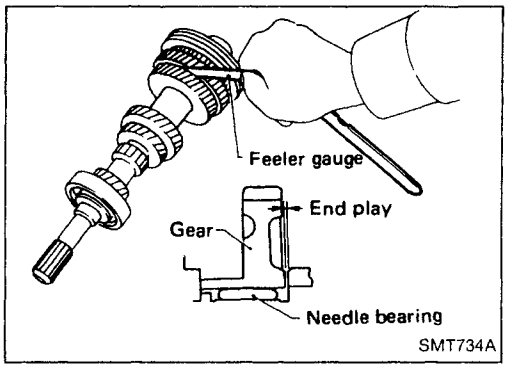

Input Shaft and Gears

DISASSEMBLY

1. Before disassembly, check 5th input gear end play.
   Gear end play:
   Refer to SDS, MT-61.

- If not within specification, disassemble and check contact surface of gear, shaft and hub. Then check clearance of snap ring groove. Refer to "ASSEMBLY", MT-17.

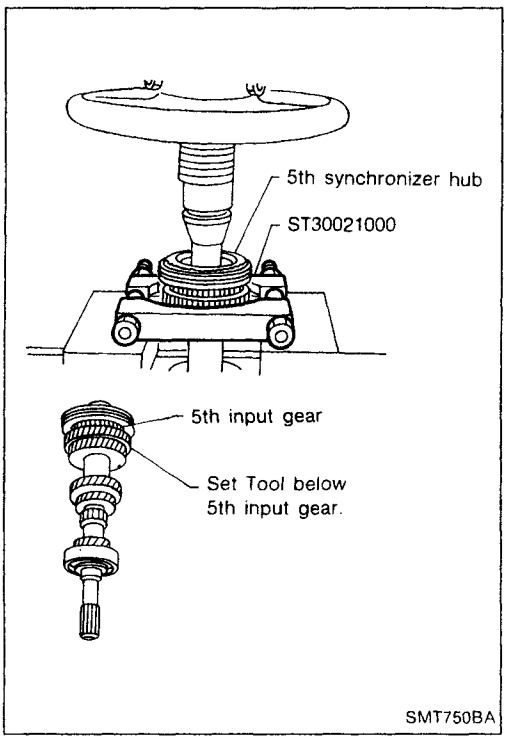

2. Remove snap ring and 5th stopper.
3. Remove 5th synchronizer, 5th input gear and 5th gear needle bearing.

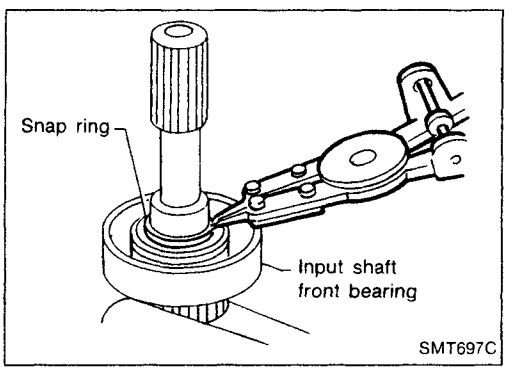

4. Remove snap ring of input shaft front bearing and input gear spacer.

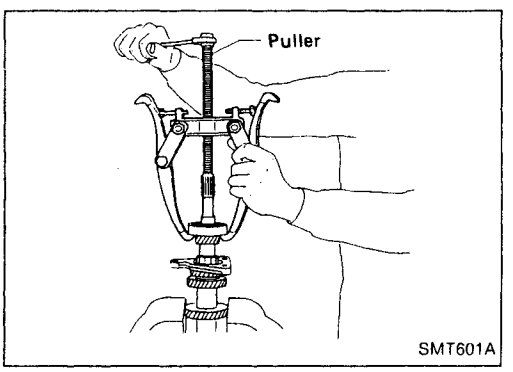

5. Pull out input shaft front bearing.
6. Remove bearing retainer.

Simpo PDF Merge and Split Unregistered Version - http://www.simpopdf.com

Input Shaft and Gears (Cont'd)

INSPECTION

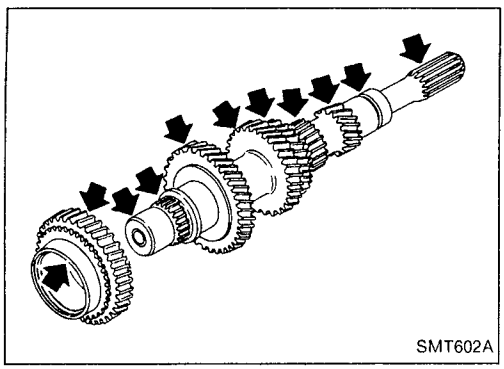
SMT602A

Gear and shaft

- Check shaft for cracks, wear or bending.
- Check gears for excessive wear, chips or cracks.

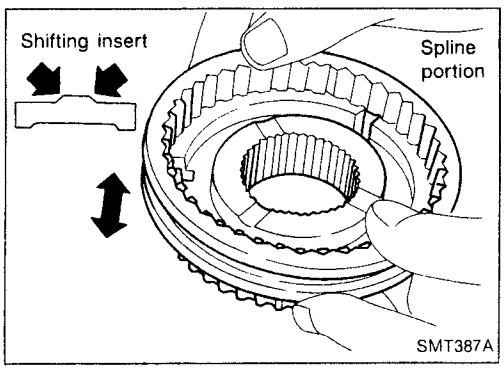

SMT387A

Synchronizer

- Check spline portion of coupling sleeves, hubs and gears for wear or cracks.
- Check baulk rings for cracks or deformation.
- Check shifting inserts for wear or deformation.

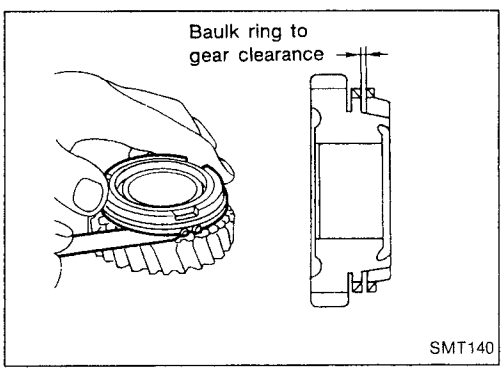

SMT140

- Measure clearance between baulk ring and gear.

Clearance between baulk ring and gear:

Standard

1.0 - 1.35 mm (0.0394 - 0.0531 in)

Wear limit

0.7 mm (0.028 in)

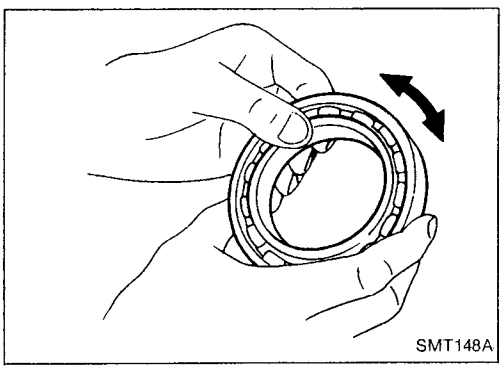
SMT148A

Bearing

- Make sure bearings roll freely and are free from noise, cracks, pitting or wear.

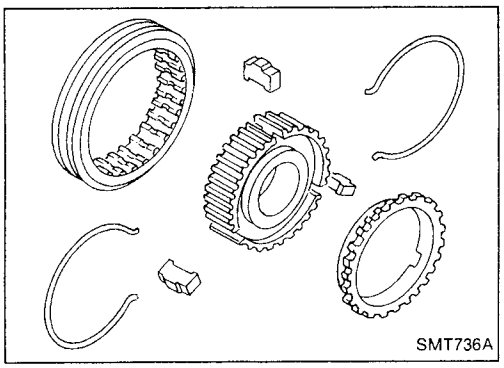
SMT736A

ASSEMBLY

1. Assemble 5th synchronizer.

MT

Simpo PDF Merge and Split Unregistered Version - http://www.simpopdf.com

Input Shaft and Gears (Cont'd)

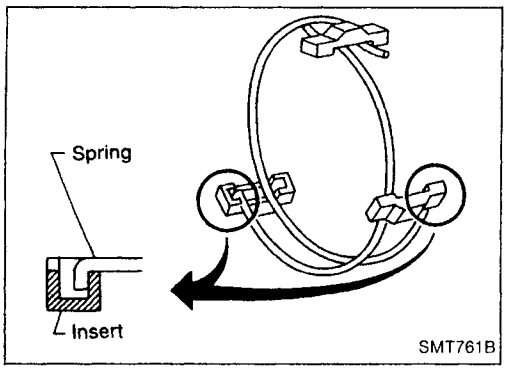

- **Be careful not to hook front and rear ends of spread spring to the same insert.**

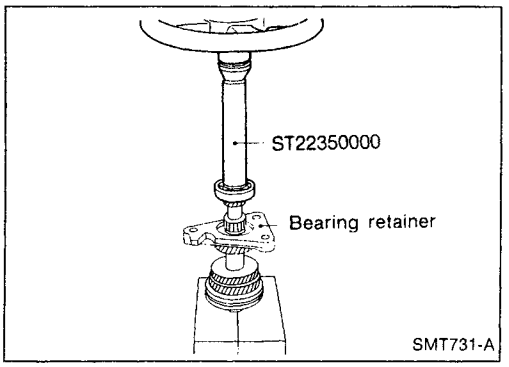

2. Install bearing retainer.
3. Press on input shaft front bearing.
4. Install spacer.

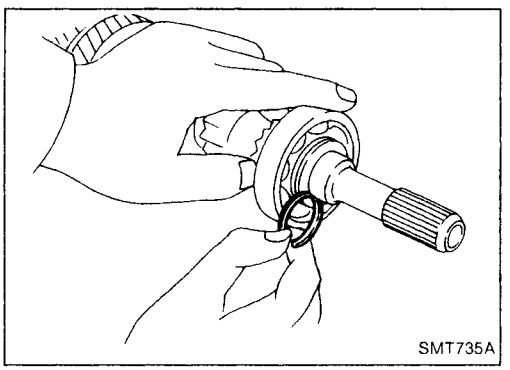

5. Select and install snap ring that gives the proper clearance of input shaft groove.
   Allowable clearance of groove:
   0 - 0.1 mm (0 - 0.004 in)
   Snap ring of input shaft front bearing:
   Refer to SDS, MT-61.

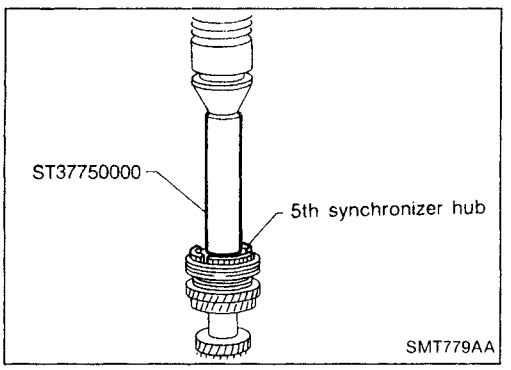

6. Install 5th gear needle bearing, 5th input gear, 5th synchronizer and 5th stopper.
7. Measure gear end play as the final check. Refer to "DISASSEMBLY", MT-16.

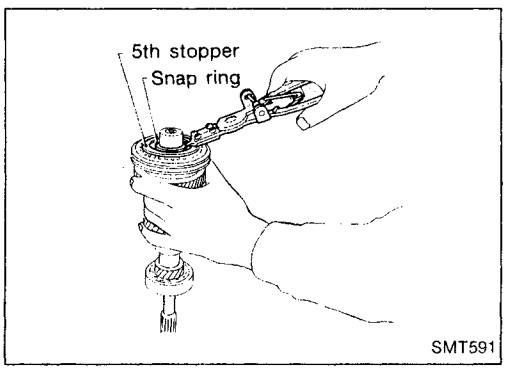

8. Select and install snap ring that gives the proper clearance of input shaft groove.
   Allowable clearance of groove:
   0 - 0.1 mm (0 - 0.004 in)
   Snap ring of 5th synchronizer:
   Refer to SDS, MT-61.

Simpo PDF Merge and Split Unregistered Version - http://www.simpopdf.com

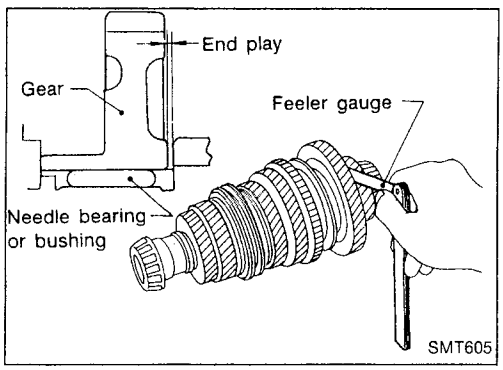

Mainshaft and Gears

DISASSEMBLY

1. Before disassembly, check 1st, 2nd, 3rd and 4th main gear end plays.
   Gear end play:
   Refer to SDS, MT-61.
   - If not within specification, disassemble and check contact surface of gear, shaft and hub. Then check clearance of C-ring groove. Refer to "ASSEMBLY", MT-21.

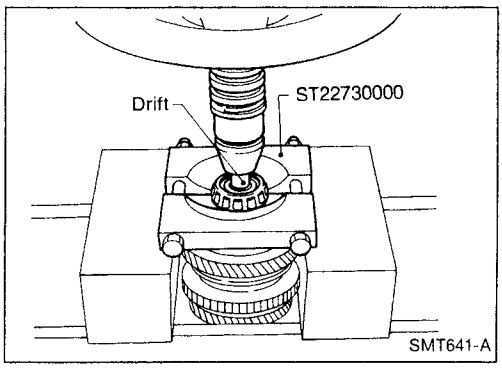

2. Press out mainshaft front bearing.

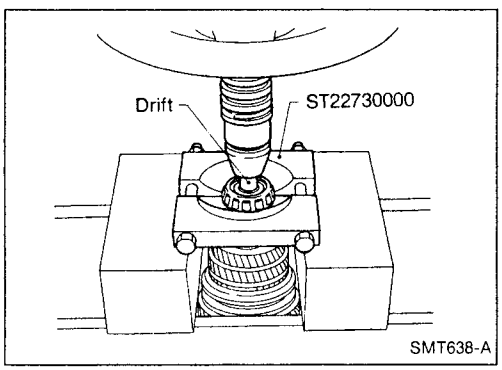

3. Press out mainshaft rear bearing.

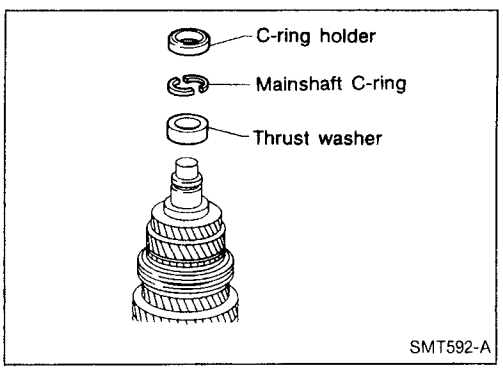

4. Remove C-ring holder, mainshaft C-rings and thrust washer.

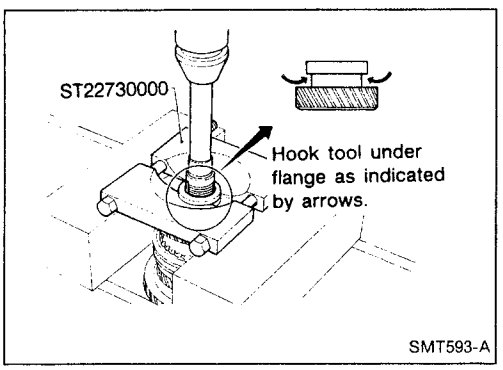

5. Press out 5th main gear.

MT

Simpo PDF Merge and Split Unregistered Version - http://www.simpopdf.com

Mainshaft and Gears (Cont'd)

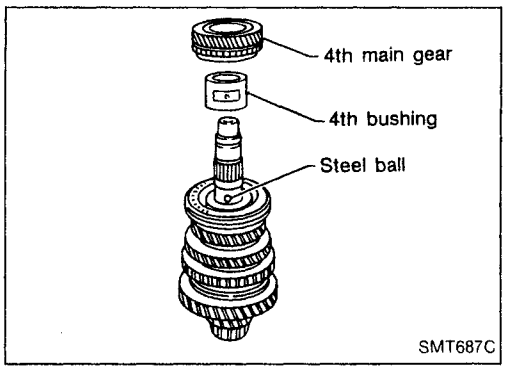

6. Remove 4th main gear, 4th bushing and steel ball.
- **Be careful not to lose steel ball.**

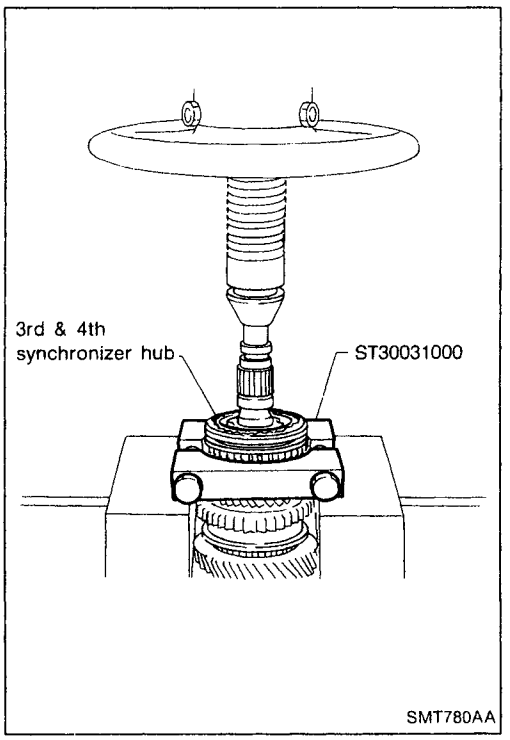

7. Remove 3rd & 4th synchronizer, 3rd main gear, 2nd & 3rd bushing, steel ball and 2nd main gear.
- **Be careful not to lose steel ball.**

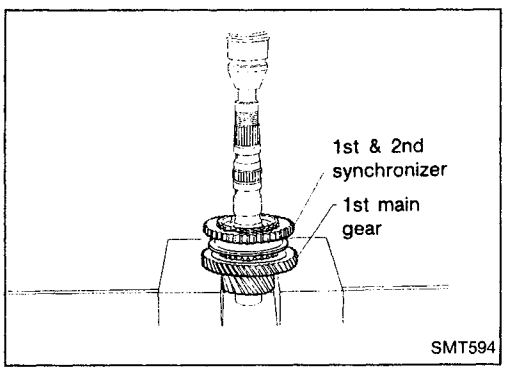

8. Remove 1st & 2nd synchronizer and 1st main gear, then remove 1st gear needle bearing.

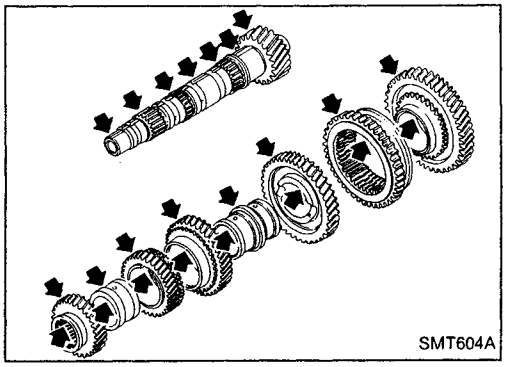

INSPECTION

Gear and shaft

- Check shaft for cracks, wear or bending.
- Check gears for excessive wear, chips or cracks.

Simpo PDF Merge and Split Unregistered Version - http://www.simpopdf.com

Mainshaft and Gears (Cont'd)

Synchronizer

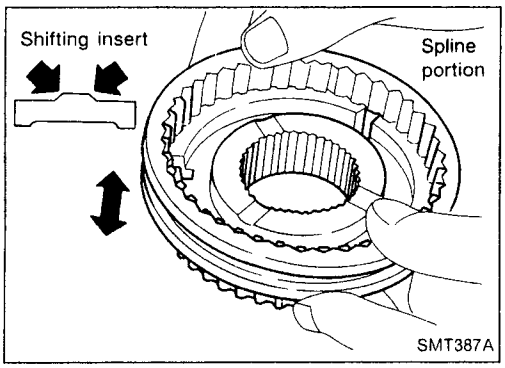

- Check spline portion of coupling sleeves, hubs and gears for wear or cracks.
- Check baulk rings for cracks or deformation.
- Check shifting inserts for wear or deformation.

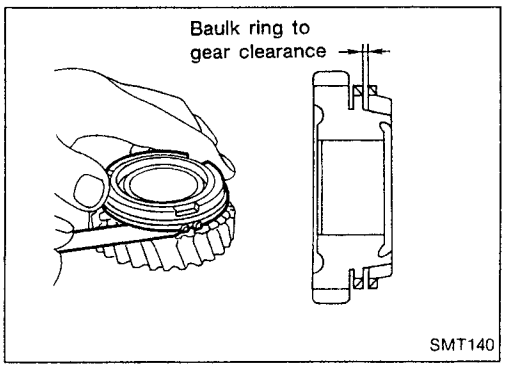

- Measure clearance between baulk ring and gear.
  Clearance between baulk rings and 1st-4th main gears:
  Standard
  1.0 - 1.35 mm (0.0394 - 0.0531 in)
  Wear limit
  0.7 mm (0.028 in)

MT

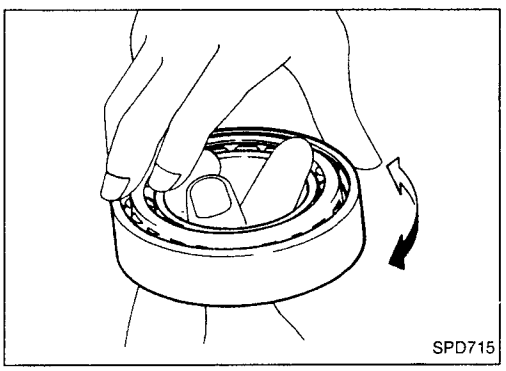

Bearing

- Make sure bearings roll freely and are free from noise, cracks, pitting or wear.
- **When replacing tapered roller bearing, replace outer and inner race as a set.**

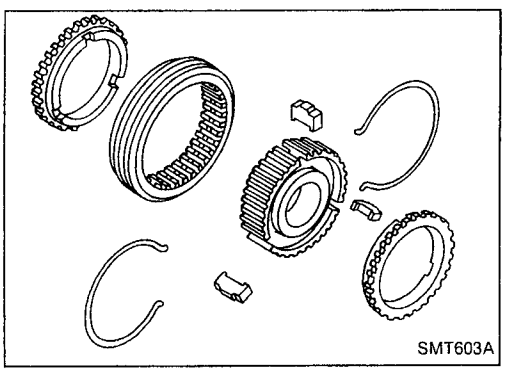

ASSEMBLY

1. Assemble 1st & 2nd and 3rd & 4th synchronizers.

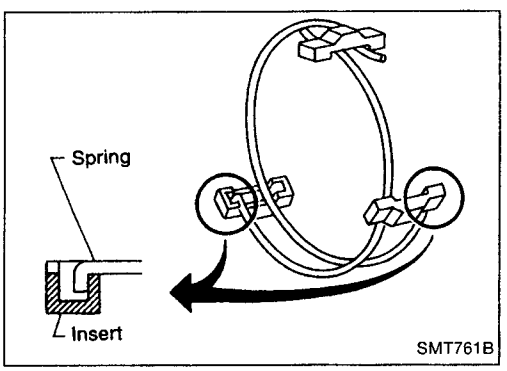

- **Be careful not to hook front and rear ends of spread spring to the same insert.**

Simpo PDF Merge and Split Unregistered Version - http://www.simpopdf.com

Mainshaft and Gears (Cont'd)

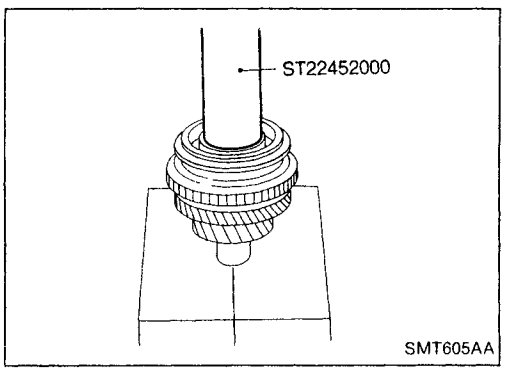

2. Install 1st gear needle bearing and 1st main gear.
3. Press on 1st & 2nd synchronizer.

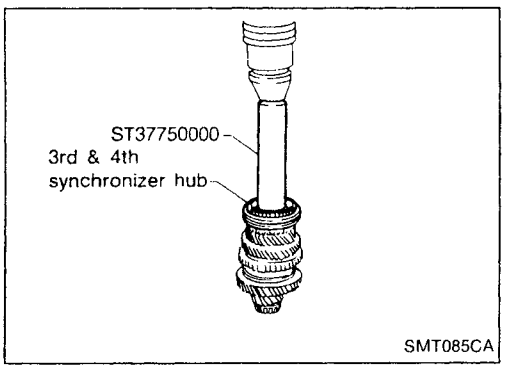

4. Install steel ball, 2nd main gear, 2nd & 3rd bushing, 3rd main gear and 3rd & 4th synchronizer.
- **Apply multi-purpose grease to steel ball before installing it.**
- **2nd & 3rd bushing has a groove in which steel ball fits.**

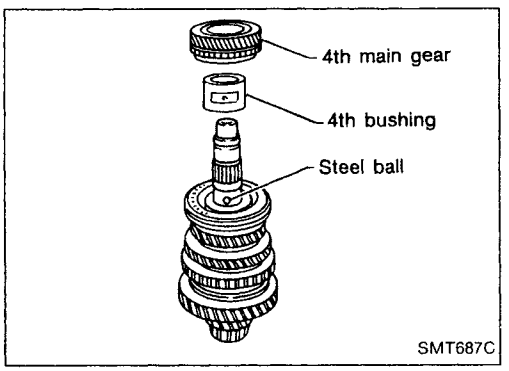

5. Install steel ball, 4th bushing and 4th main gear.
- **Apply multi-purpose grease to steel ball before installing it.**
- **4th bushing has a groove in which steel ball fits.**

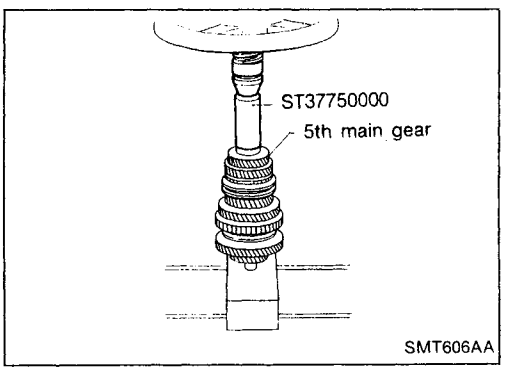

6. Press on 5th main gear.

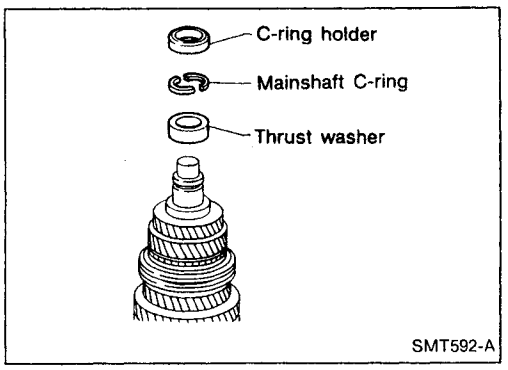

7. Install thrust washer.
8. Select and install mainshaft C-ring that gives proper clearance of groove in mainshaft.
   Allowable clearance of groove:
   0 - 0.1 mm (0 - 0.004 in)
   Mainshaft C-ring:
   Refer to SDS, MT-61.
9. Install C-ring holder.

Simpo PDF Merge and Split Unregistered Version - http://www.simpopdf.com

Mainshaft and Gears (Cont'd)

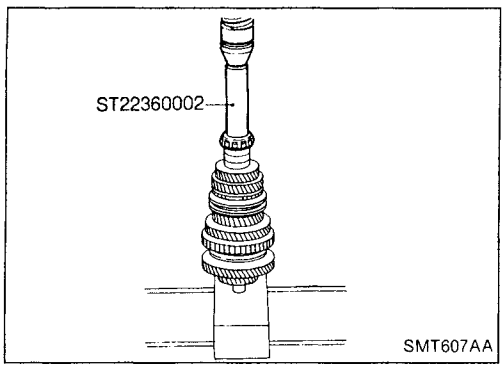

10. Press on mainshaft rear bearing.

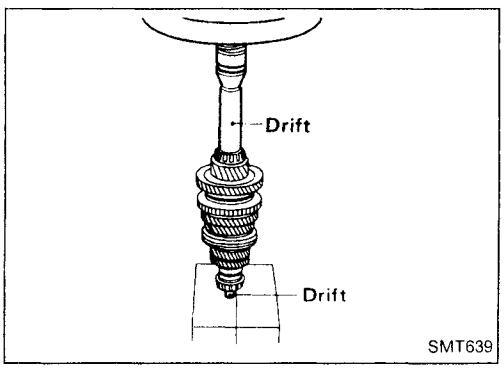

11. Press on mainshaft front bearing.
12. Measure gear end play as the final check — Refer to "DISASSEMBLY", MT-19.

MT

Final Drive

DISASSEMBLY

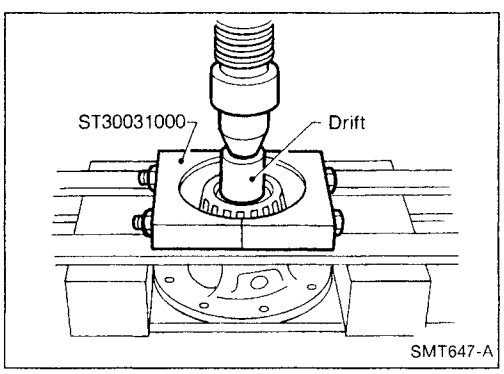

1. Remove final gear.
2. Remove speedometer drive gear by cutting it.
3. Press out differential side bearings.

- **Be careful not to mix up the right and left bearings.**

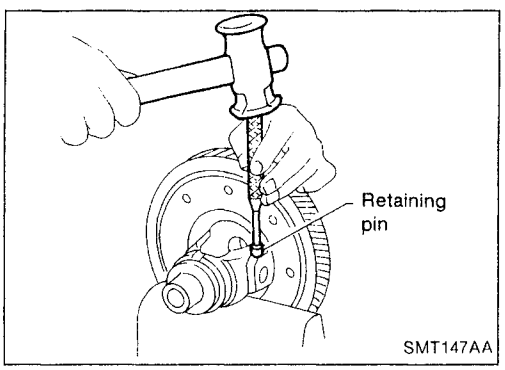

4. Drive out retaining pin and draw out pinion mate shaft.
5. Remove pinion mate gears and side gears.

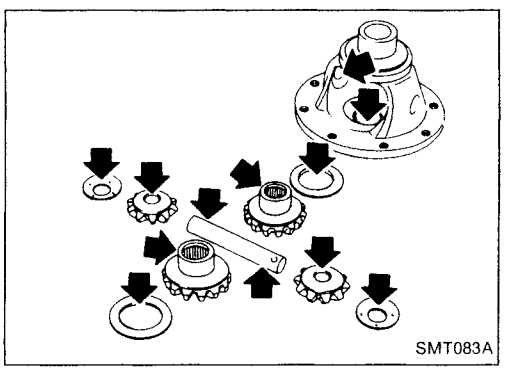

INSPECTION

Gear, washer, shaft and case

- Check mating surfaces of differential case, side gears and pinion mate gears.
- Check washers for wear.

Simpo PDF Merge and Split Unregistered Version - http://www.simpopdf.com

Final Drive (Cont'd)

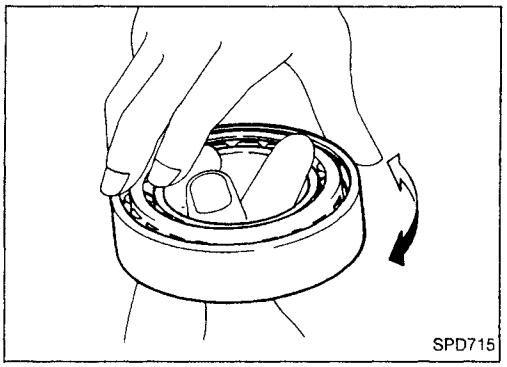

Bearing

- Make sure bearings roll freely and are free from noise, cracks, pitting or wear.
- **When replacing tapered roller bearing, replace outer and inner race as a set.**

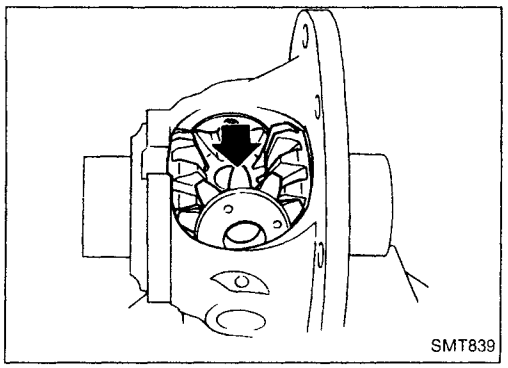

ASSEMBLY

1. Attach side gear thrust washers to side gears and install in differential case.
2. Install pinion mate thrust washers and pinion mate gears.

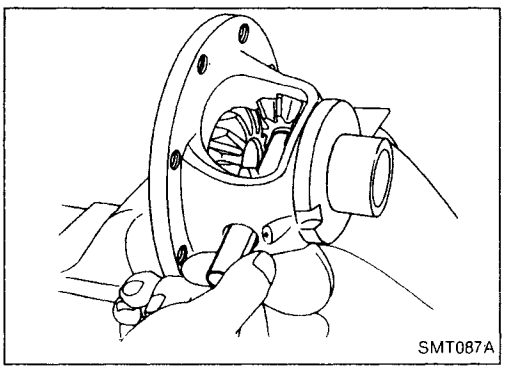

3. Insert pinion mate shaft.
- **When inserting, be careful not to damage pinion mate thrust washers.**

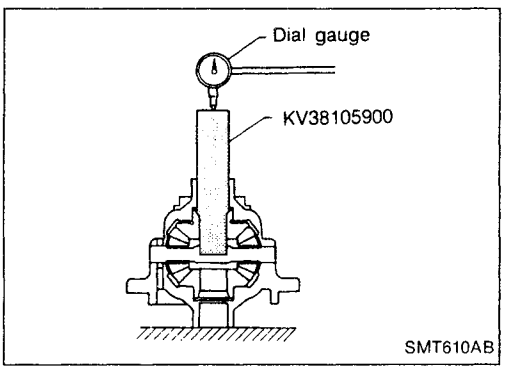

4. Measure clearance between side gear and differential case with washers following the procedure below:

a. Set Tool and dial indicator on side gear.

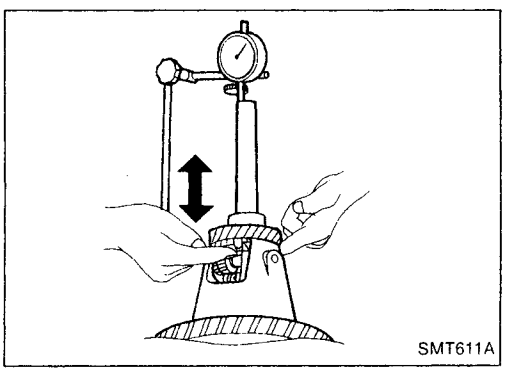

b. Move side gear up and down to measure dial indicator deflection. Always measure indicator deflection on both side gears.

Clearance between side gear and differential case with washers:

0.1 - 0.2 mm (0.004 - 0.008 in)

c. If not within specification, adjust clearance by changing thickness of side gear thrust washers.

Side gear thrust washer:

Refer to SDS, MT-62.

Simpo PDF Merge and Split Unregistered Version - http://www.simpopdf.com

Final Drive (Cont'd)

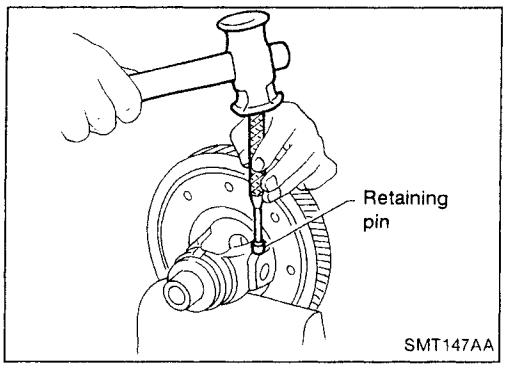

5. Install retaining pin.
- **Make sure that retaining pin is flush with case.**

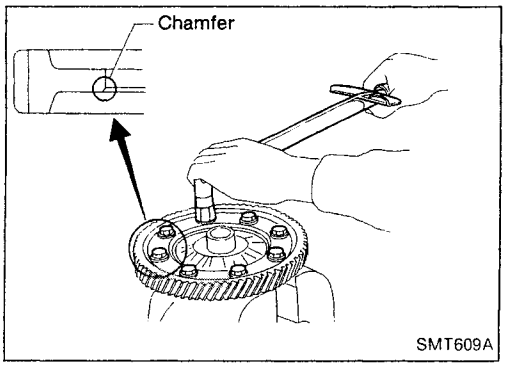

6. Install final gear.
- **Apply locking sealant to final gear fixing bolts before installing them.**

7. Install speedometer drive gear and stopper.

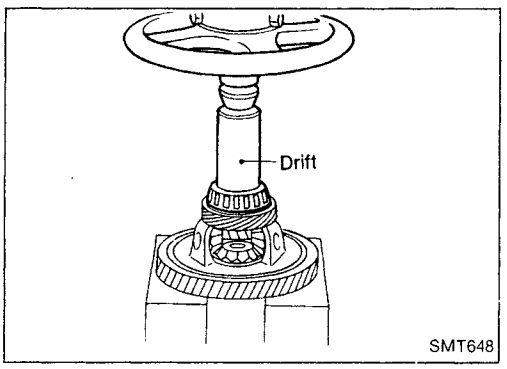

8. Press on differential side bearings.

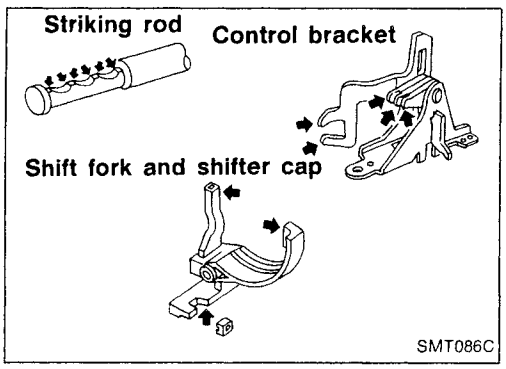

Shift Control Components

INSPECTION

- Check contact surface and sliding surface for wear, scratches, projections or other damage.

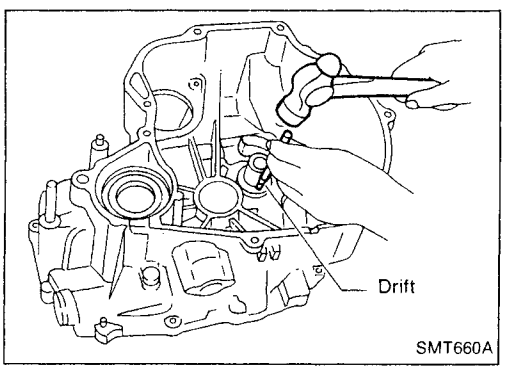

Case Components

Input shaft oil seal

1. Drive out input shaft oil seal.

MT

Simpo PDF Merge and Split Unregistered Version - http://www.simpopdf.com

Case Components (Cont'd)

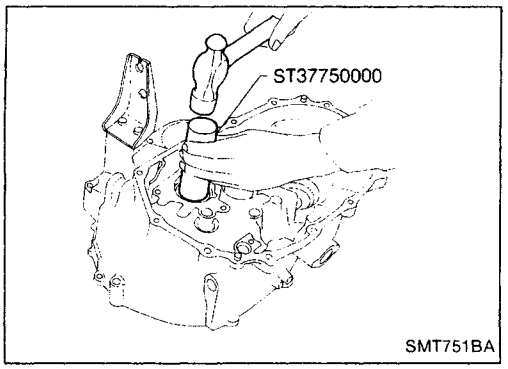

2. Install input shaft oil seal.
- **Apply multi-purpose grease to seal lip of oil seal before installing.**

Input shaft rear bearing

1. Remove welch plug from transmission case.

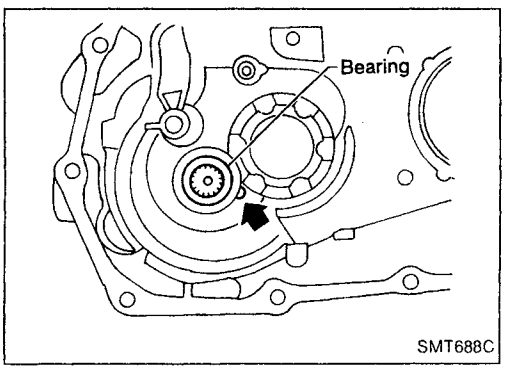

2. Remove input shaft rear bearing by tapping it from welch plug hole.

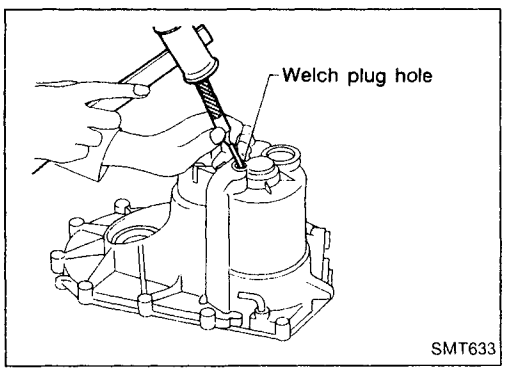

3. Install welch plug.
- **Apply recommended sealant to mating surface of transmission case.**

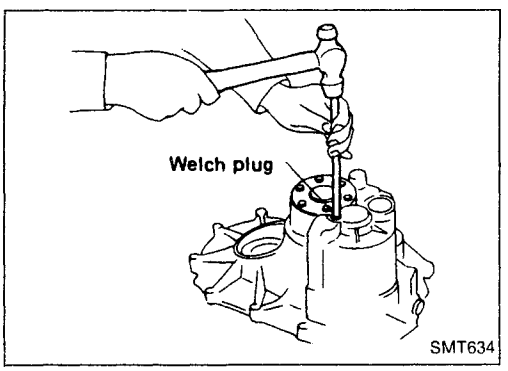

4. Install input shaft rear bearing.

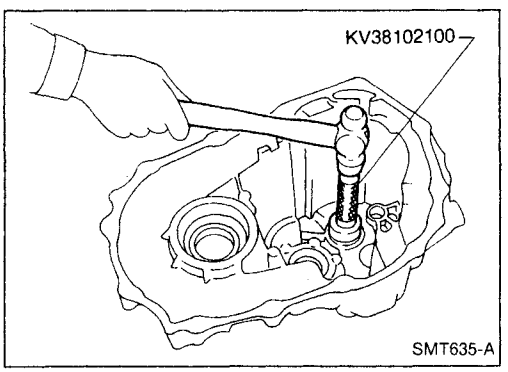

Simpo PDF Merge and Split Unregistered Version - http://www.simpopdf.com

Case Components (Cont'd)

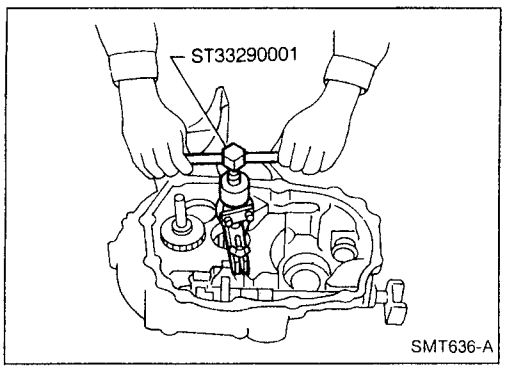

Mainshaft front bearing outer race and oil channel

1. Remove mainshaft front bearing outer race.
2. Remove oil channel.

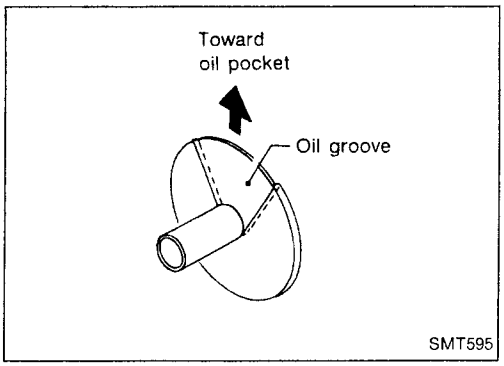

3. Install oil channel.

- **Ensure the oil groove faces the oil pocket.**

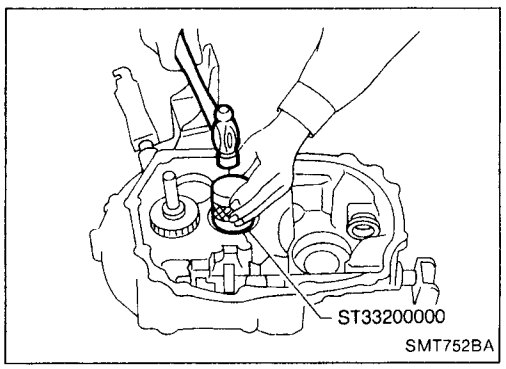

4. Install mainshaft front bearing outer race.

Mainshaft rear bearing outer race

- **Refer to "Differential Side Bearing Preload", MT-29.**

Differential side bearing outer race

- **Refer to "Mainshaft Bearing Preload", MT-28.**

MT

Simpo PDF Merge and Split Unregistered Version - http://www.simpopdf.com

Differential Side Bearing Preload

If any of the following parts are replaced, adjust differential side bearing preload.

- **Differential case**
- **Differential side bearing**
- **Clutch housing**
- **Transmission case**

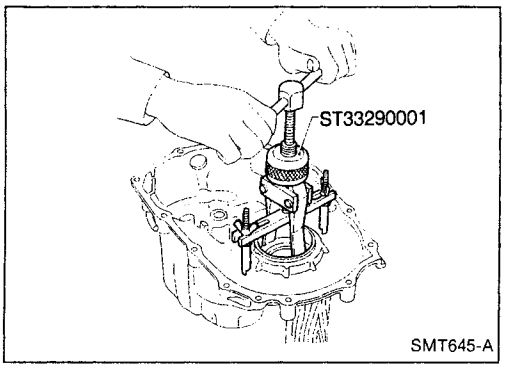

1. Remove differential side bearing outer race (transmission case side) and shim(s).

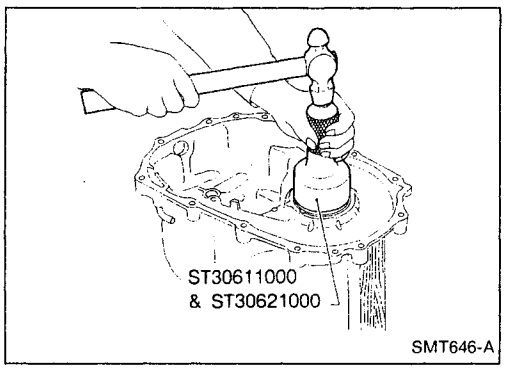

2. Reinstall differential side bearing outer race without shim(s).
3. Install final drive assembly on clutch housing.
4. Install transmission case on clutch housing.

- **Tighten transmission case fixing bolts to the specified torque. Refer to MT-10.**

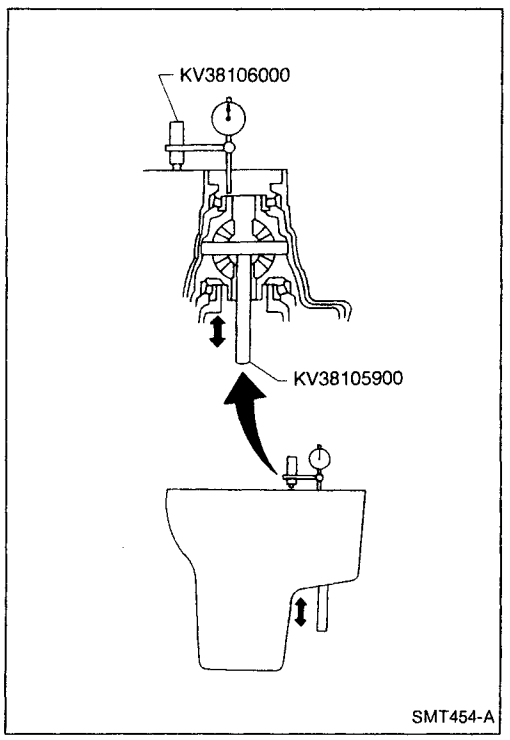

5. Set dial indicator on front end of differential case.
6. Insert Tool all the way into differential side gear.
7. Move Tool up and down and measure dial indicator deflection.
8. Select shim considering bearing preload.
   Suitable shim thickness =
   Dial indicator deflection
   + specified bearing preload
   Differential side bearing preload and adjusting shims:
   Refer to SDS, MT-62, 63.
9. Install selected shim(s) and differential side bearing outer race.

10. Check differential side bearing turning torque.

a. Install final drive assembly on clutch housing.
b. Install transmission case on clutch housing.

- **Tighten transmission case fixing bolts to the specified torque. Refer to MT-10.**

Simpo PDF Merge and Split Unregistered Version - http://www.simpopdf.com

Differential Side Bearing Preload (Cont'd)

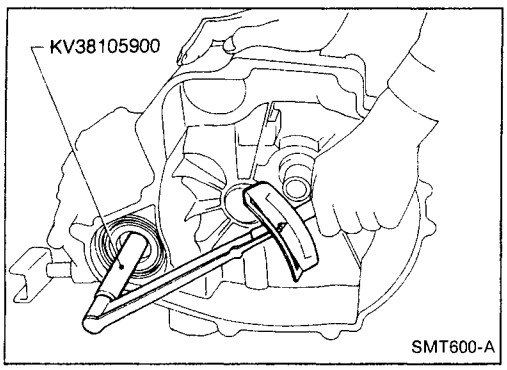

c. Measure turning torque of final drive assembly.
Turning torque of final drive assembly (New bearing):
Refer to SDS, MT-62.

- **When old bearing is used again, turning torque will be slightly less than the above.**
- **Make sure torque is close to the specified range.**
- **Changes in turning torque of final drive assembly per revolution should be within 1.0 N·m (10 kg-cm, 8.7 in-lb) without binding.**

Mainshaft Bearing Preload

If any of the following parts are replaced, adjust mainshaft bearing preload.

- **Mainshaft**
- **Mainshaft bearings**
- **Clutch housing**
- **Transmission case**

MT

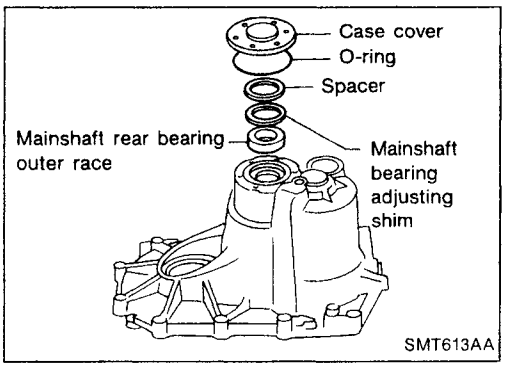

1. Remove case cover, O-ring, spacer, mainshaft bearing adjusting shim and mainshaft rear bearing outer race from transmission case.
2. Install mainshaft assembly on clutch housing.
3. Install transmission case on clutch housing.
- **Tighten transmission case fixing bolts to the specified torque. Refer to MT-10.**

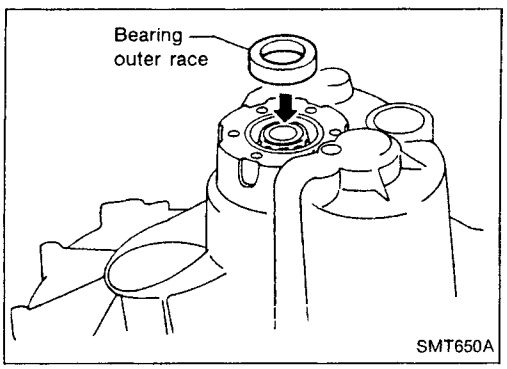

4. Install mainshaft rear bearing outer race on inner race.

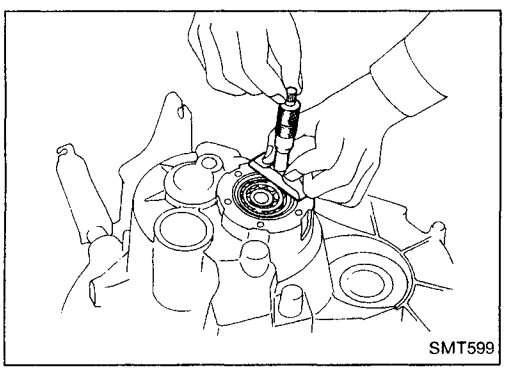

5. Measure distance from transmission case to bearing outer race.
- **Make sure that bearing is properly seated.**

6. Select shim. Refer to SDS, MT-62.
7. Check total turning torque after assembling. Refer to "ASSEMBLY", MT-30.

Simpo PDF Merge and Split Unregistered Version - http://www.simpopdf.com

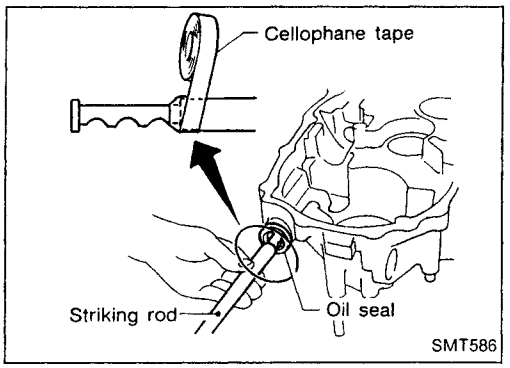

1. Install striking rod, lever and interlock.
- **Tape edges of striking rod to avoid damaging oil seal lip during installation.**
- **When taped edges of striking rod are past the oil seal, remove tape.**

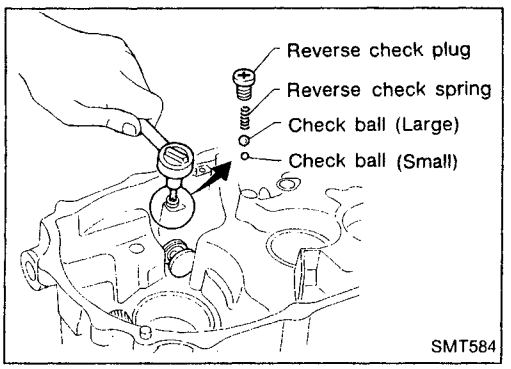

2. Install reverse check sleeve assembly.
3. Install check balls, reverse check spring and check plug.

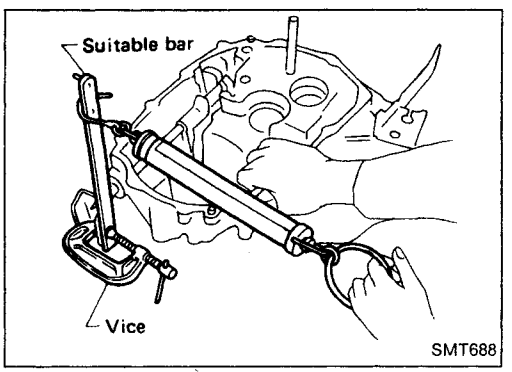

4. Check reverse check turning torque (At striking rod).
   Reverse check turning torque (At striking rod):
   Refer to SDS, MT-61.
- If not within specification, select another check plug having a different length and reinstall it.
   Reverse check plug:
   Refer to SDS, MT-61.
5. Install selected reverse check plug.
- **Apply locking sealant to thread of plug before installing it.**

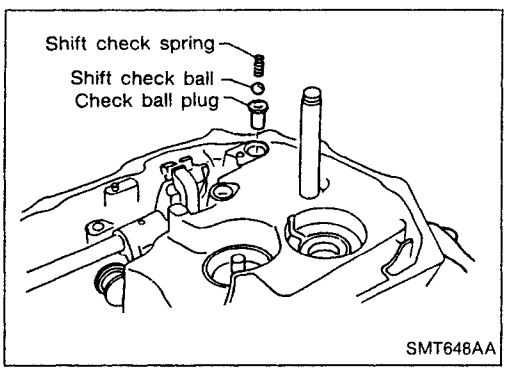

6. Install check ball plug, shift check ball and shift check spring.
7. Install oil pocket.

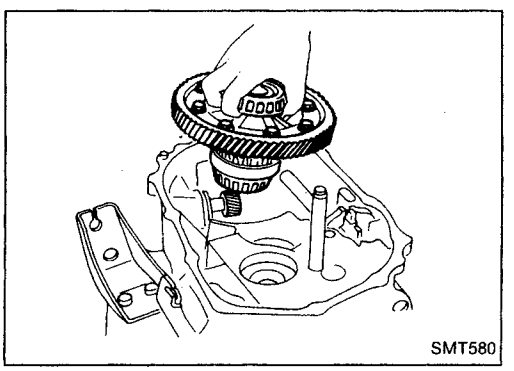

8. Install gear components onto clutch housing.

— RS5F30A —

a. Install final drive assembly and reverse idler gear.

Simpo PDF Merge and Split Unregistered Version - http://www.simpopdf.com

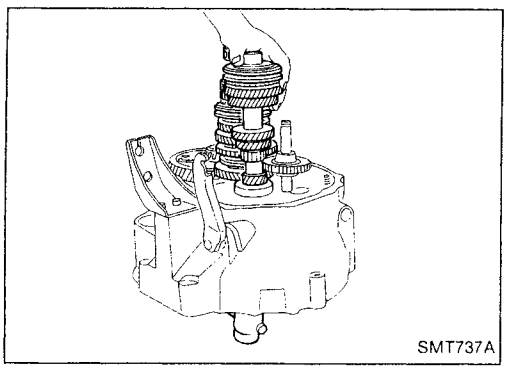
SMT737A

b. Install mainshaft and input gear as a set.
- **Take care not to damage oil seal lip with splines of input shaft while shaft is being inserted into clutch housing.**
- **Take care not to damage oil channel when inserting mainshaft into clutch housing.**

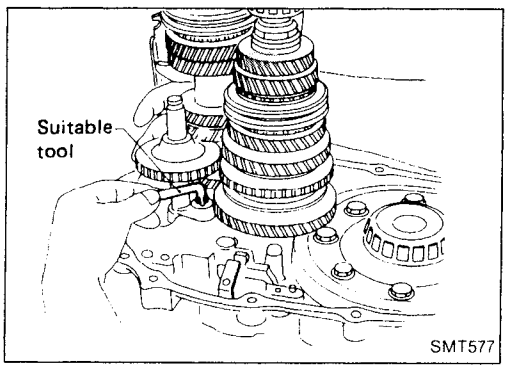

SMT577

c. Install bearing retainer.
- **One of these three screws is torx type and should be installed with suitable tool, as shown.**

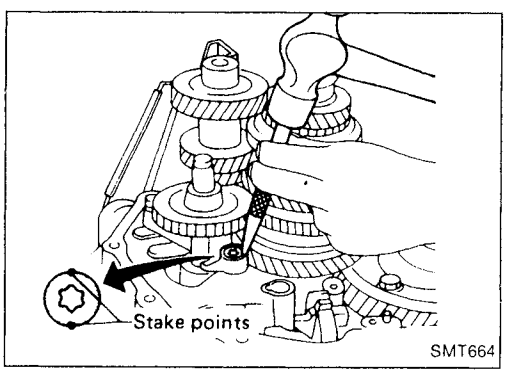

SMT664

d. After installing torx screw, stake it at two points.

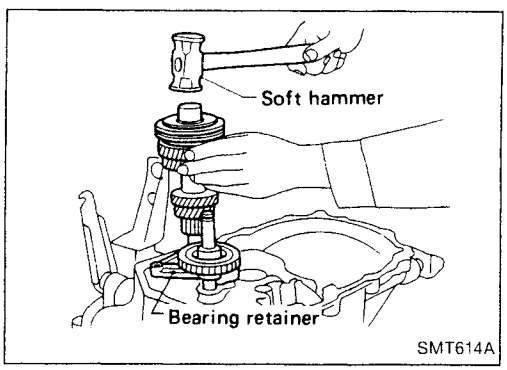

SMT614A

— RS5F31A —

a. Install input shaft assembly and reverse idler gear.
- **Be careful not to damage oil seal lip with splines of input shaft.**

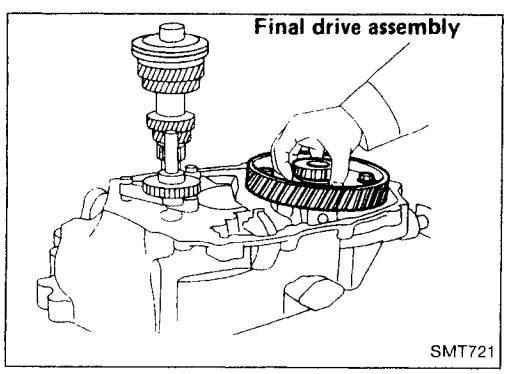

SMT721

b. Install final drive assembly.

MT

Simpo PDF Merge and Split Unregistered Version - http://www.simpopdf.com

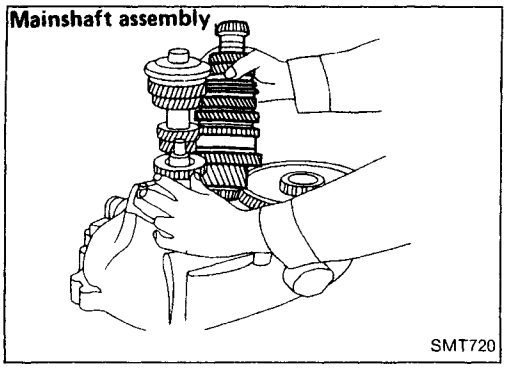

c. Install mainshaft assembly.
- **Take care not to damage oil channel when inserting mainshaft into clutch housing.**

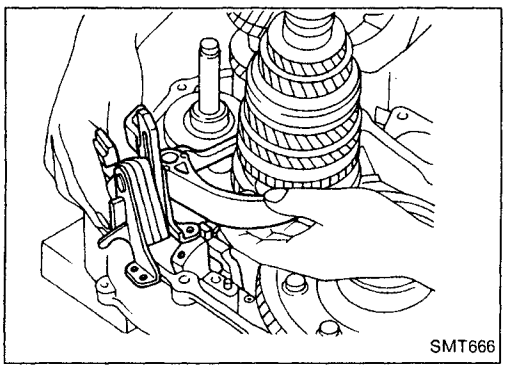

9. Apply grease to shifter caps, then install it to control bracket. Install control bracket with 1st & 2nd shift fork.
10. Install 3rd & 4th and 5th shift forks.

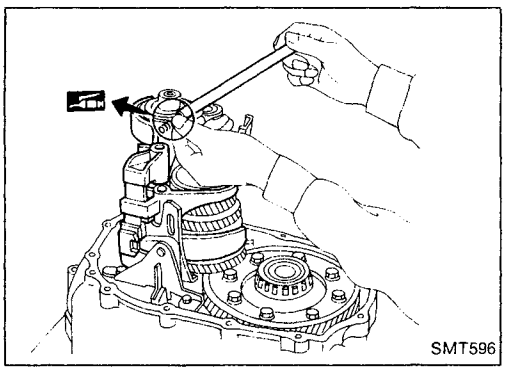

11. Insert fork shaft.
- **Apply multi-purpose grease to support spring before installing.**

12. Install reverse idler spacer.

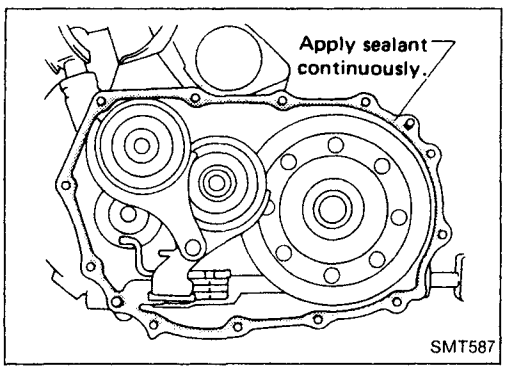

13. Apply recommended sealant to mating surface of clutch housing.
14. Install transmission case on clutch housing.

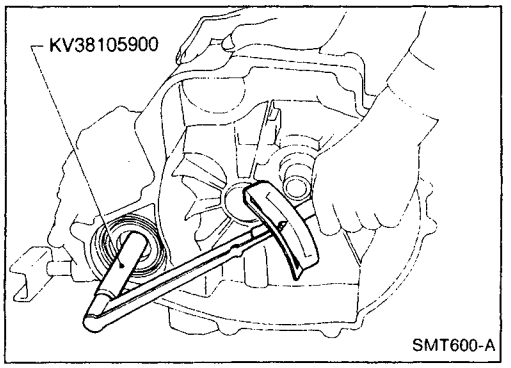

15. Measure total turning torque.
    Total (Final drive + Mainshaft) turning torque (New bearing):
    Refer to SDS, MT-62.
- **When old bearing is used again, turning torque will be slightly less than the above.**
- **Make sure torque is close to the specified range.**

Simpo PDF Merge and Split Unregistered Version - http://www.simpopdf.com

Case Components

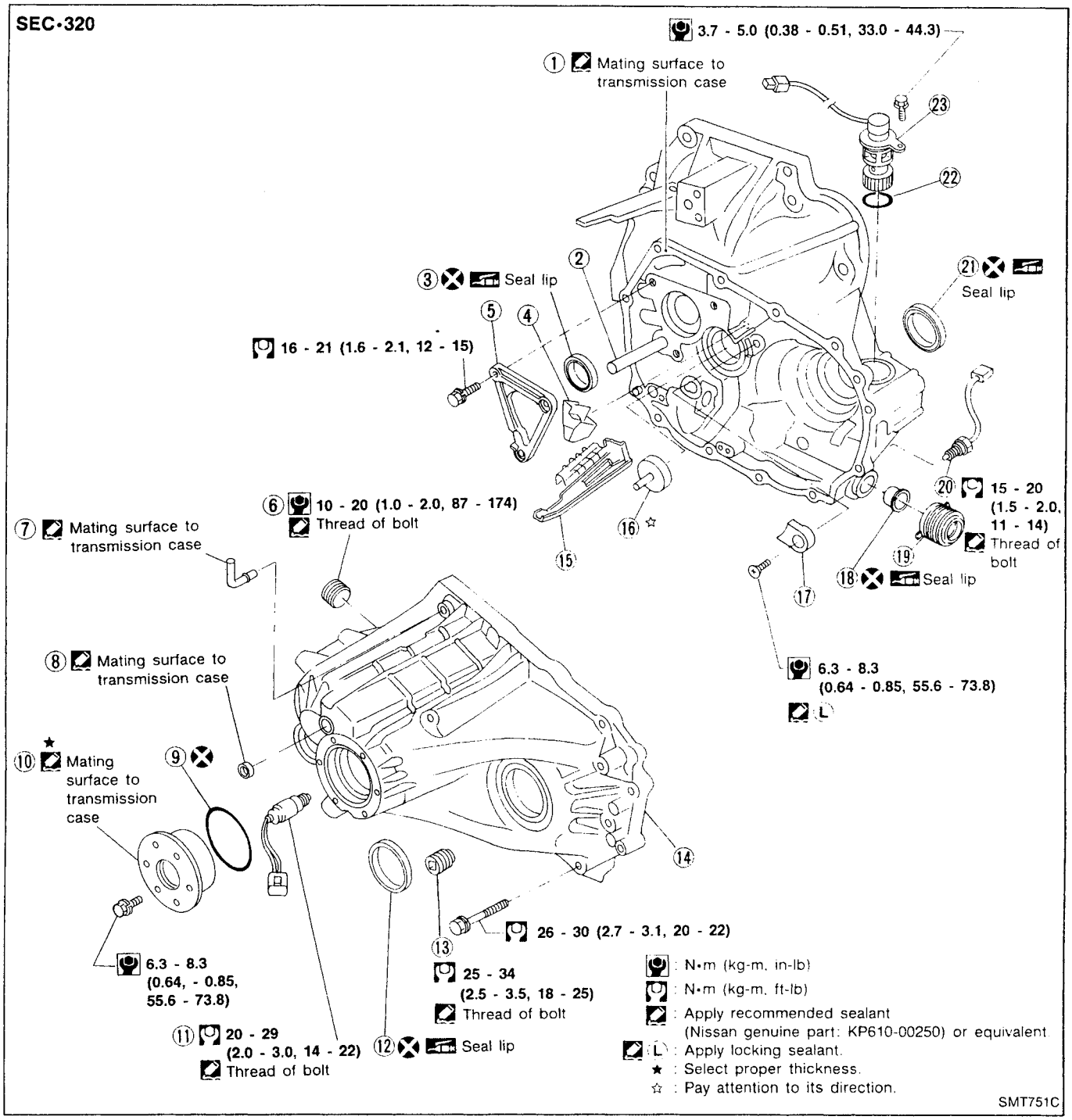

1. Clutch housing
2. Reverse idler shaft
3. Input shaft oil seal
4. Oil pocket
5. Bearing retainer
6. Filler plug
7. Air breather
8. Welch plug
9. O-ring
10. Case cover
11. Back-up lamp switch
12. Differential oil seal
13. Drain plug
14. Transmission case
15. Oil gutter
16. Oil channel
17. Bearing retainer
18. Striking rod oil seal
19. Boot
20. Neutral position switch
21. Differential oil seal
22. O-ring
23. Speedometer pinion assembly

MT

Simpo PDF Merge and Split Unregistered Version - http://www.simpopdf.com

Gear Components

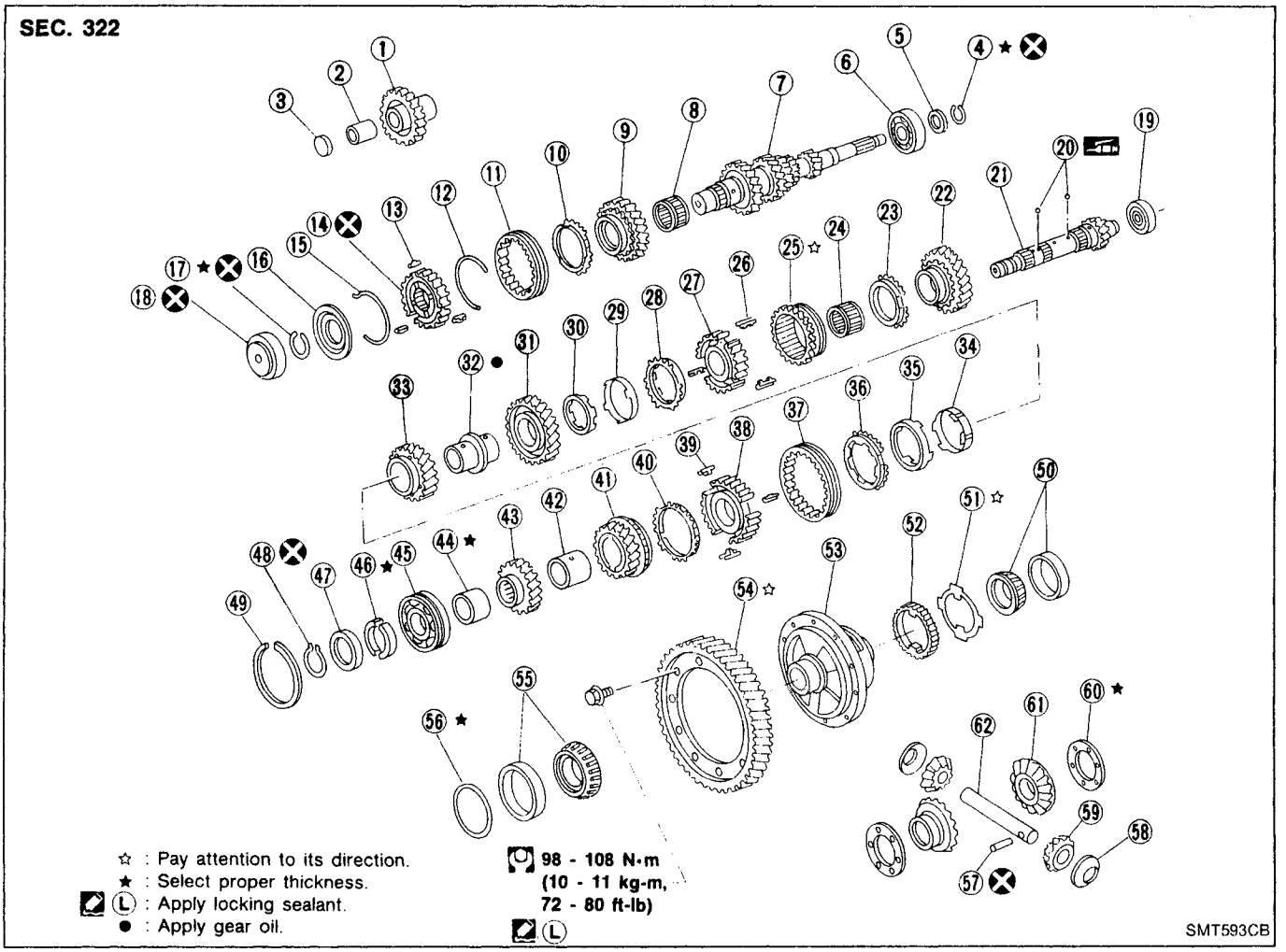

① Reverse idler gear
② Reverse idler bushing
③ Reverse idler spacer
④ Snap ring
⑤ Spacer
⑥ Input shaft front bearing
⑦ Input shaft
⑧ 5th gear needle bearing
⑨ 5th input gear
⑩ Baulk ring
⑪ Coupling sleeve
⑫ Spread spring
⑬ Shifting insert
⑭ 5th gear synchronizer hub
⑮ Spread spring
⑯ 5th stopper
⑰ Snap ring
⑱ Input shaft bearing
⑲ Mainshaft front bearing
⑳ Steel ball
㉑ Mainshaft
㉒ 1st main gear
㉓ Baulk ring
㉔ 1st gear needle bearing
㉕ Reverse main gear (Coupling sleeve)
㉖ Insert spring
㉗ 1st & 2nd synchronizer hub
㉘ 2nd outer baulk ring
㉙ 2nd synchronizer cone
㉚ 2nd inner baulk ring
㉛ 2nd main gear
㉜ 2nd & 3rd bushing
㉝ 3rd main gear
㉞ 3rd inner baulk ring
㉟ 3rd synchronizer cone
㊱ 3rd outer baulk ring
㊲ Coupling sleeve
㊳ 3rd & 4th synchronizer hub
㊴ Insert spring
㊵ Baulk ring
㊶ 4th main gear
㊷ 4th bushing
㊸ 5th main gear
㊹ Spacer
㊺ Mainshaft rear bearing
㊻ Mainshaft C-ring
㊼ C-ring holder
㊽ Snap ring
㊾ Snap ring
㊿ Differential side bearing
(51) Speedometer stopper
(52) Speedometer drive gear
(53) Differential case
(54) Final gear
(55) Differential side bearing
(56) Differential side bearing adjusting shim
(57) Retaining pin
(58) Pinion mate thrust washer
(59) Pinion mate gear
(60) Thrust washer
(61) Side gear
(62) Pinion mate shaft

Simpo PDF Merge and Split Unregistered Version - http://www.simpopdf.com

Shift Control Components

SEC. 328

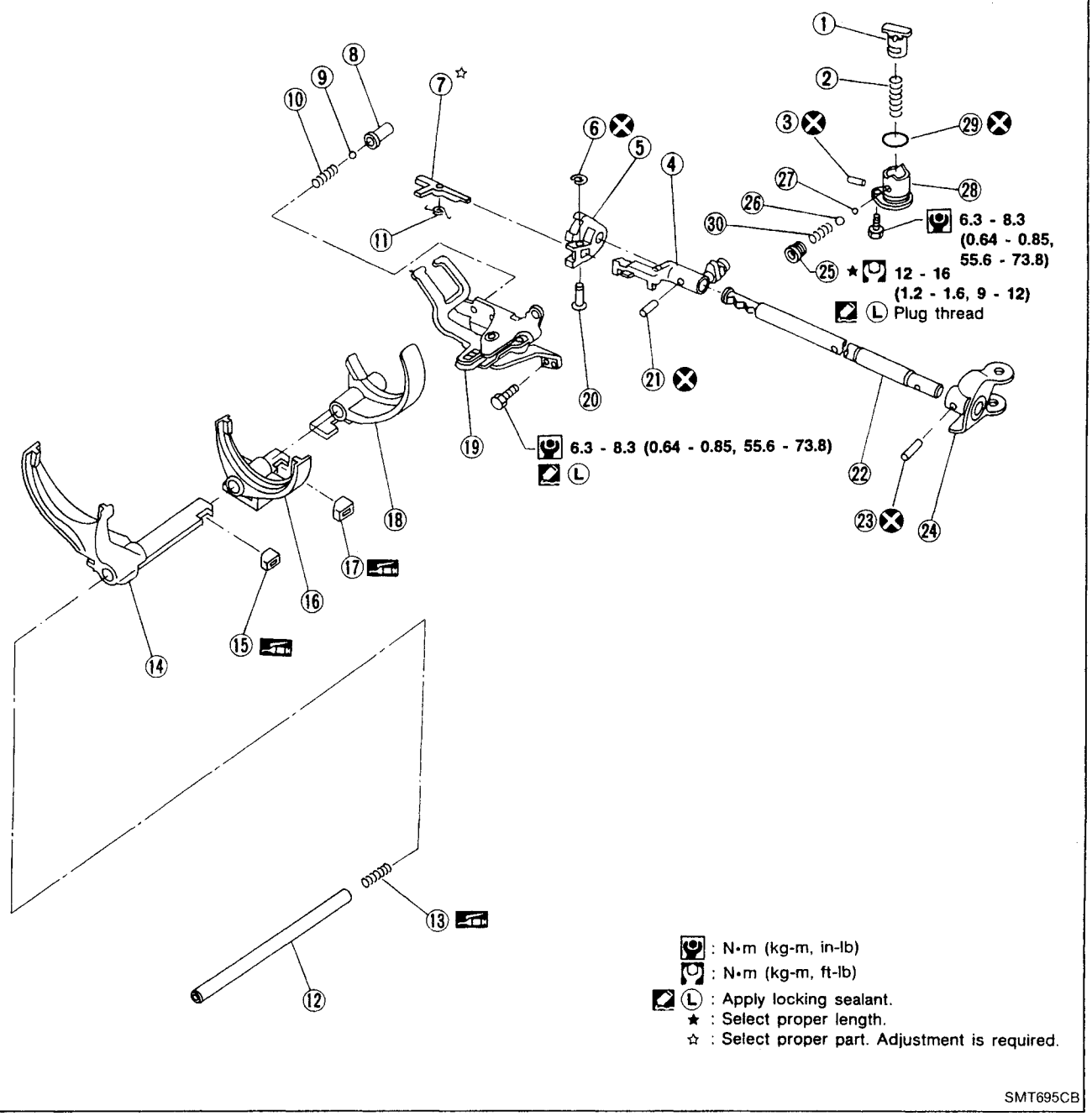

① Check plunger
② Select return spring
③ Stopper pin
④ Striking lever
⑤ Striking interlock
⑥ E-ring
⑦ Reverse brake cam
⑧ Check ball plug
⑨ Shift check ball
⑩ Shift check spring
⑪ Reverse brake cam spring
⑫ Fork shaft
⑬ Fork shaft support spring
⑭ 5th shift fork
⑮ Shifter cap
⑯ 3rd & 4th shift fork
⑰ Shifter cap
⑱ 1st & 2nd shift fork
⑲ Control bracket
⑳ Interlock pin
㉑ Retaining pin
㉒ Striking rod
㉓ Retaining pin
㉔ Yoke
㉕ Reverse check plug
㉖ Check ball (Large)
㉗ Check ball (Small)
㉘ Check sleeve
㉙ O-ring
㉚ Reverse check spring

MT

Simpo PDF Merge and Split Unregistered Version - http://www.simpopdf.com

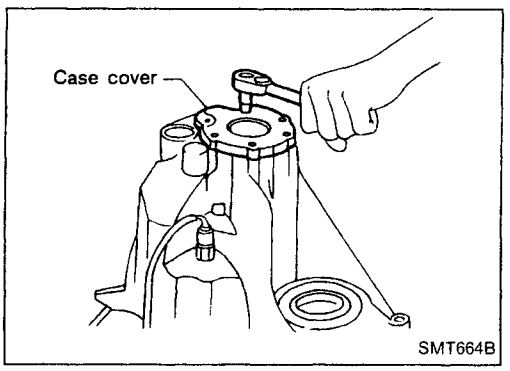

1. Remove case cover.

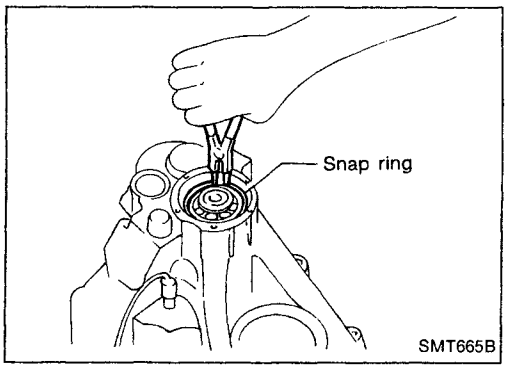

2. Remove mainshaft bearing snap ring.

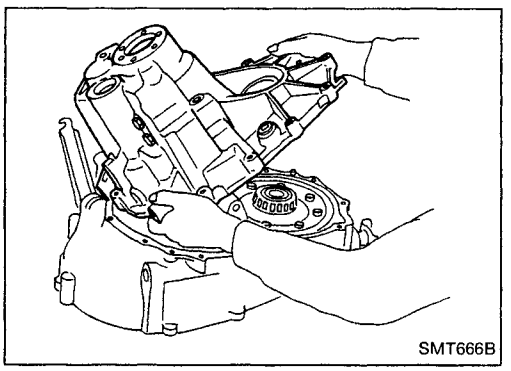

3. Remove transmission case while slightly tilting it to prevent 5th shift fork from interfering with case.

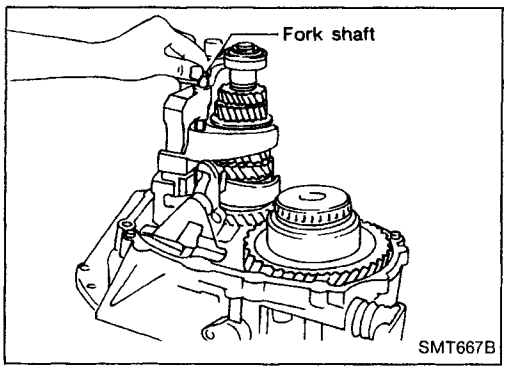

4. Draw out reverse idler spacer and fork shaft.

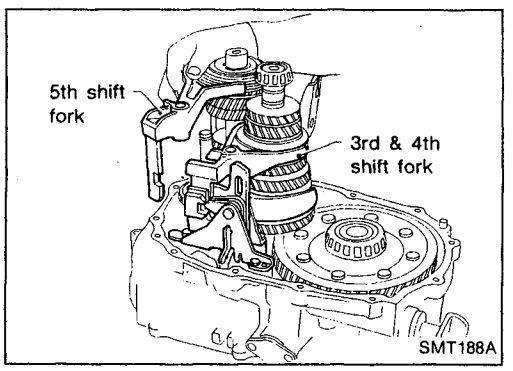

5. Remove 5th and 3rd & 4th shift forks.
- **Be careful not to lose shifter cap.**

Simpo PDF Merge and Split Unregistered Version - http://www.simpopdf.com

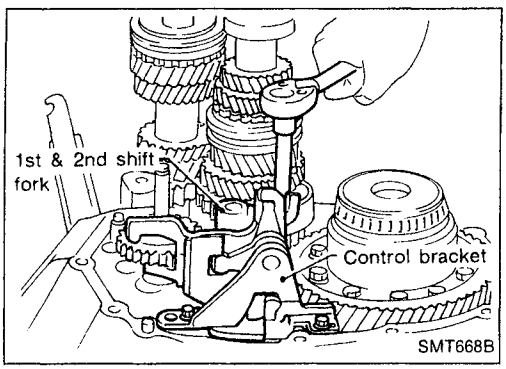

6. Remove control bracket with 1st & 2nd shift fork.

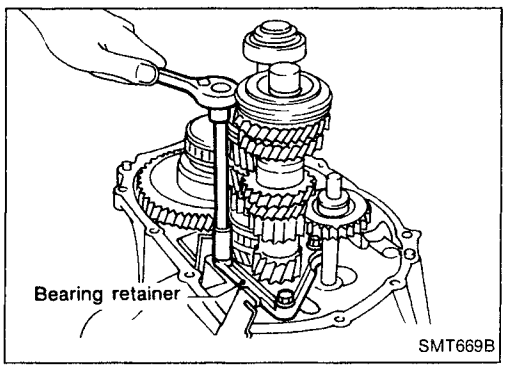

7. Remove gear components from clutch housing.
a. Remove input shaft front bearing retainer securing bolts.

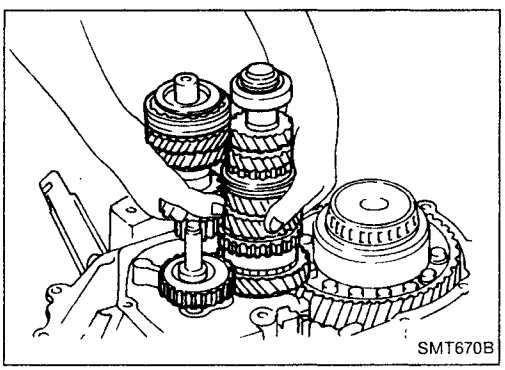

b. Remove input shaft with bearing retainer, mainshaft assembly and reverse idler gear.

- **Always withdraw mainshaft straight out. Failure to do so can damage resin oil channel on clutch housing side.**
- **Do not draw out reverse idler shaft from clutch housing because these fittings will be loose.**

When removing input shaft, be careful not to scratch oil seal lip with shaft spline.

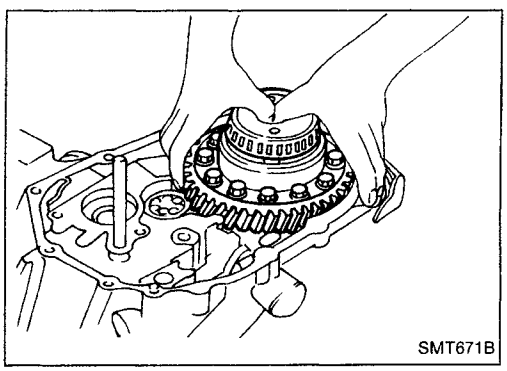

c. Remove final drive assembly.

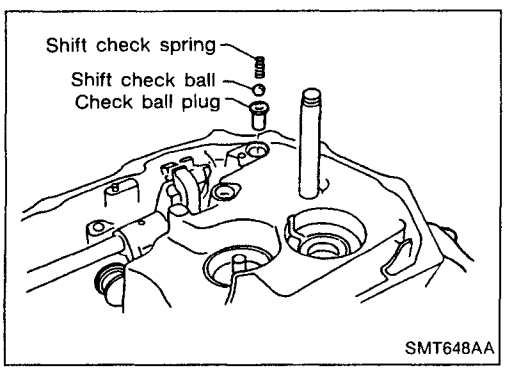

8. Remove oil pocket, shift check ball, shift check spring and check ball plug.

MT

Simpo PDF Merge and Split Unregistered Version - http://www.simpopdf.com

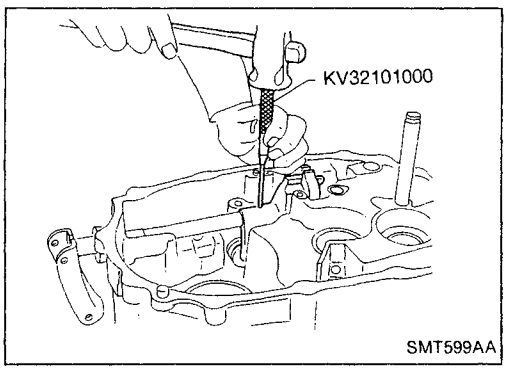

9. Drive retaining pin out of striking lever, then remove striking rod, striking lever and striking interlock.
- **Select a position where retaining pin does not interfere with clutch housing when removing retaining pin.**

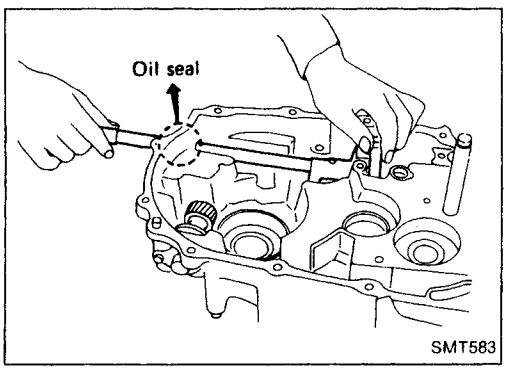

- **Be careful not to damage oil seal lip, when removing striking rod. If necessary, tape edges of striking rod.**

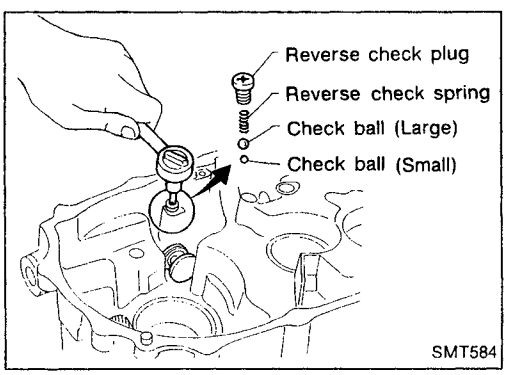

10. Remove reverse check plug, then detach reverse check spring and check balls.
- **If the smaller ball does not come out, remove it together with check sleeve assembly.**

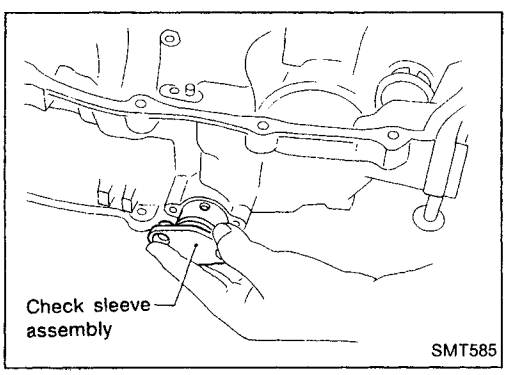

11. Remove check sleeve assembly.

Simpo PDF Merge and Split Unregistered Version - http://www.simpopdf.com

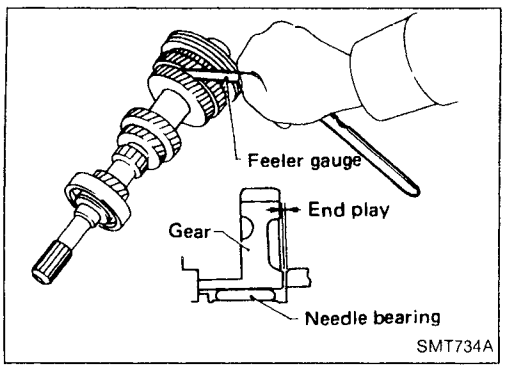

Input Shaft and Gears

DISASSEMBLY

1. Before disassembly, check 5th input gear end play.
   Gear end play:
   Refer to SDS, MT-64.

- If not within specification, disassemble and check contact surface of gear, shaft and hub. Check clearance of snap ring groove. Refer to "ASSEMBLY", MT-40.

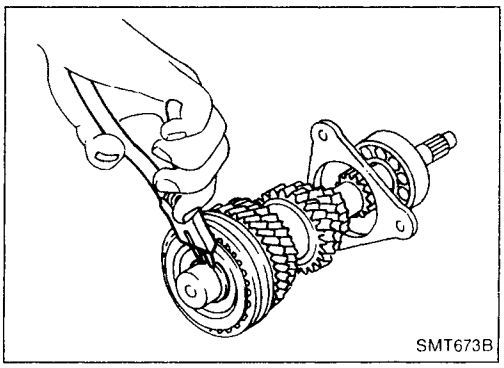

2. Remove snap ring and 5th stopper.

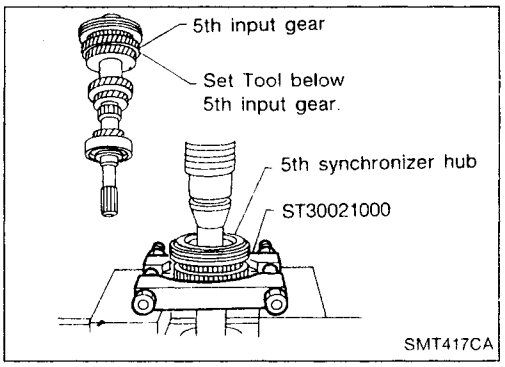

3. Remove 5th synchronizer, 5th input gear and 5th gear needle bearing.

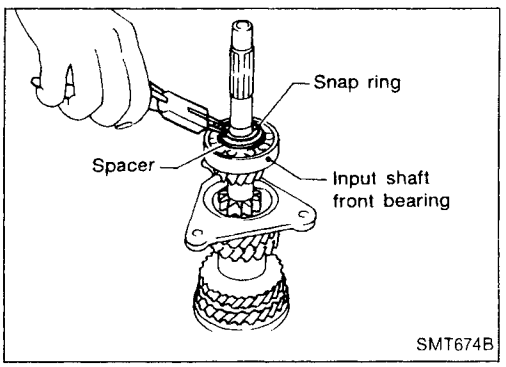

4. Remove snap ring of input shaft front bearing and input gear spacer.

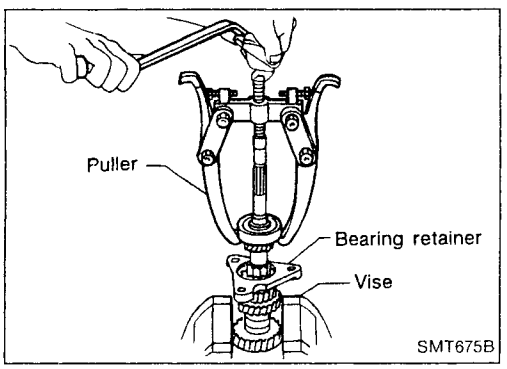

5. Remove input shaft front bearing.
6. Remove bearing retainer.

MT

Simpo PDF Merge and Split Unregistered Version - http://www.simpopdf.com

Input Shaft and Gears (Cont'd)

INSPECTION

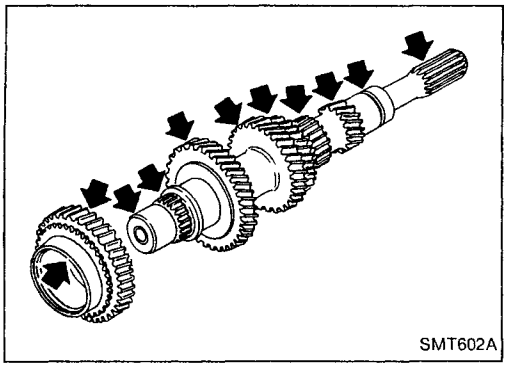

Gear and shaft

- Check shaft for cracks, wear or bending.
- Check gears for excessive wear, chips or cracks.

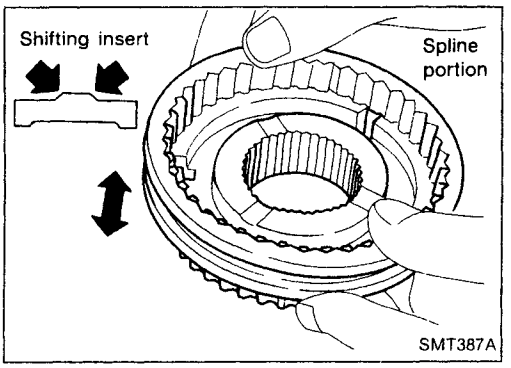

5th synchronizer

- Check spline portion of coupling sleeves, hubs and gears for wear or cracks.
- Check baulk rings for cracks or deformation.
- Check insert springs for wear or deformation.

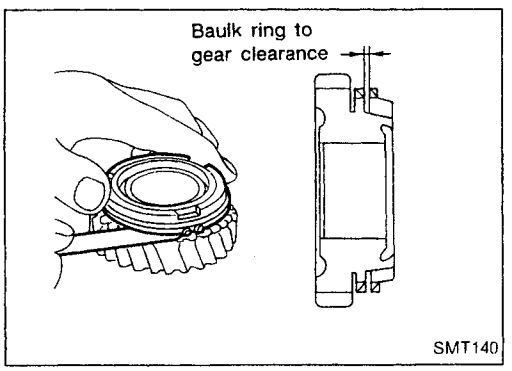

- Measure clearance between baulk ring and gear.

Clearance between baulk ring and gear:

Standard

0.90 - 1.50 mm (0.0354 - 0.0591 in)

Wear limit

0.7 mm (0.028 in)

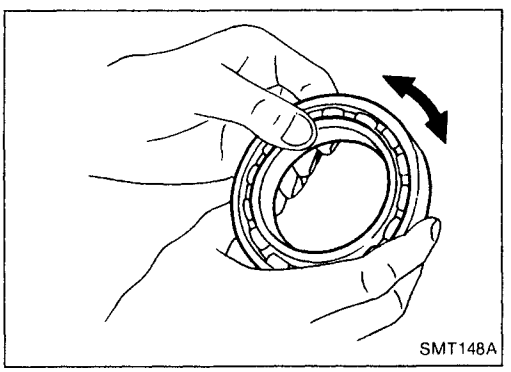

Bearing

- Make sure bearings roll freely and are free from noise, cracks, pitting or wear.

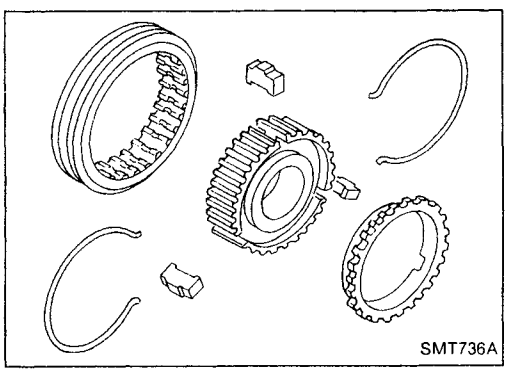

ASSEMBLY

1. Assemble 5th synchronizer.

Simpo PDF Merge and Split Unregistered Version - http://www.simpopdf.com

Input Shaft and Gears (Cont'd)

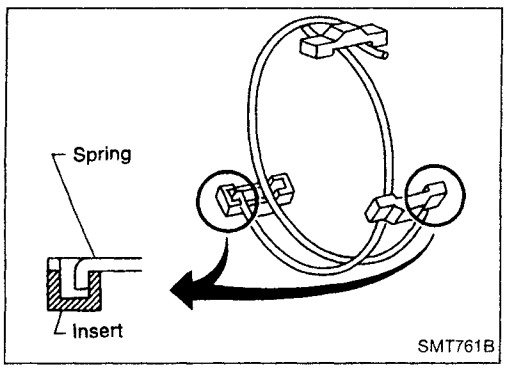

- **Be careful not to hook front and rear ends of spread spring to the same insert.**

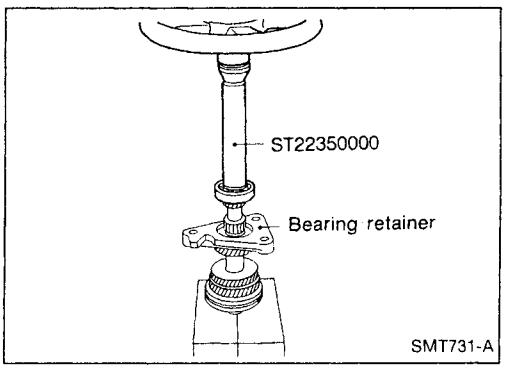

2. Install bearing retainer.
3. Press on input shaft front bearing.
4. Install input gear spacer.

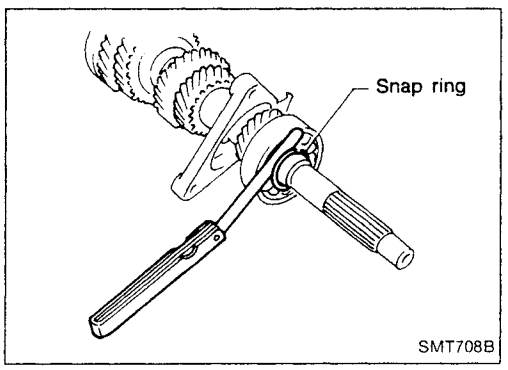

5. Select and install snap ring that gives proper clearance of input shaft groove.
   Allowable clearance of groove:
   0 - 0.1 mm (0 - 0.004 in)
   Snap rings of input shaft front bearing:
   Refer to SDS, MT-65.

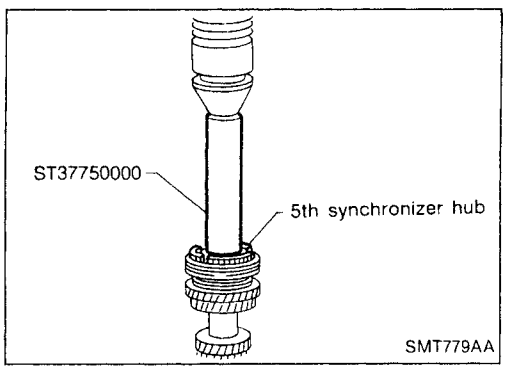

- **Be sure to replace 5th gear synchronizer hub with new one when it is removed.**

6. Install 5th gear needle bearing, 5th input gear, 5th synchronizer and 5th stopper.

- **Input shaft must be vertical to press on synchronizer hub.**

7. Measure gear end play as a final check. Refer to "DISASSEMBLY", MT-39.

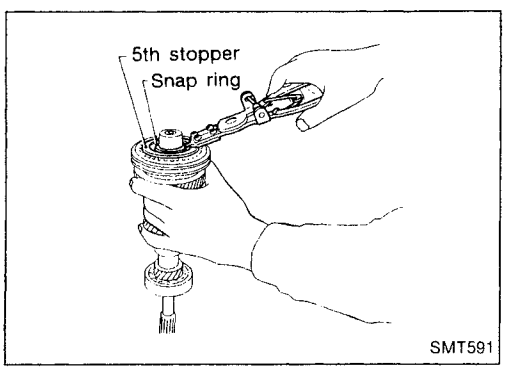

8. Select and install snap ring that gives proper clearance of input shaft groove.
   Allowable clearance of groove:
   0 - 0.1 mm (0 - 0.004 in)
   Snap ring of 5th synchronizer:
   Refer to SDS, MT-65.

MT

Simpo PDF Merge and Split Unregistered Version - http://www.simpopdf.com

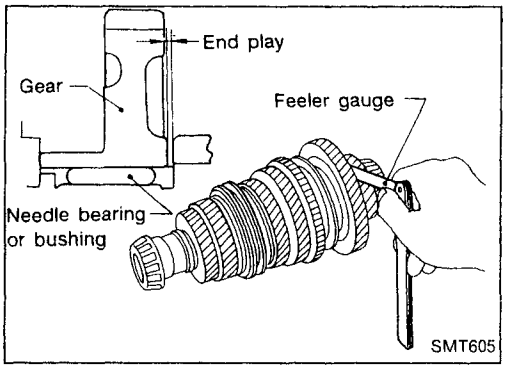

Mainshaft and Gears

DISASSEMBLY

1. Before disassembly, measure gear end play.
   Gear end play:
   Refer to SDS, MT-64.
- If end play is not within the specified limit, disassemble and check the parts.

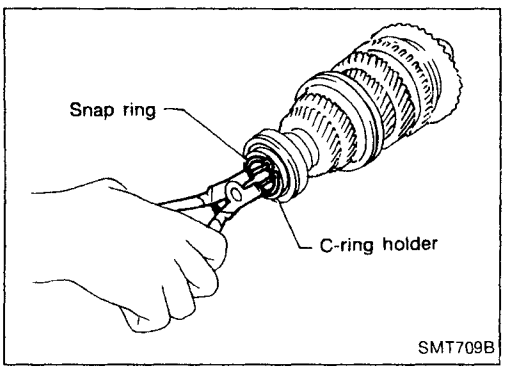

2. Remove mainshaft rear bearing snap ring, C-ring holder and mainshaft C-rings.

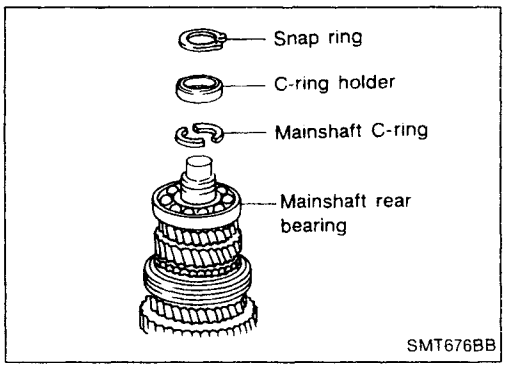

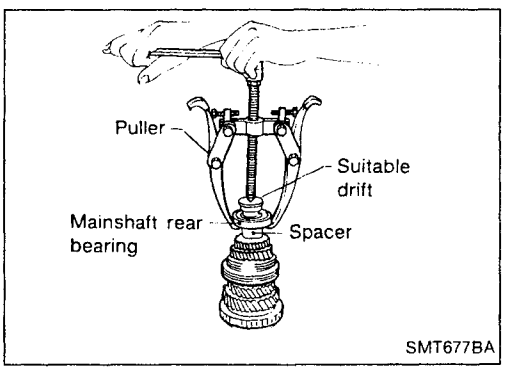

3. Remove mainshaft rear bearing and spacer.

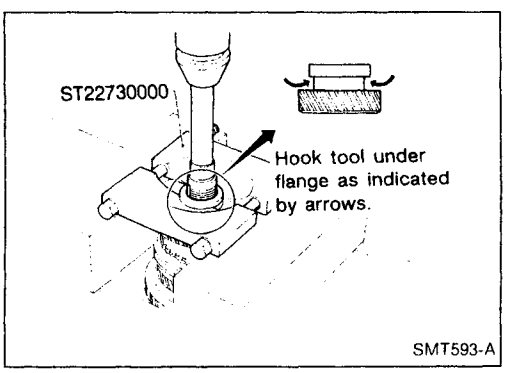

4. Remove 5th main gear.

Simpo PDF Merge and Split Unregistered Version - http://www.simpopdf.com

Mainshaft and Gears (Cont'd)

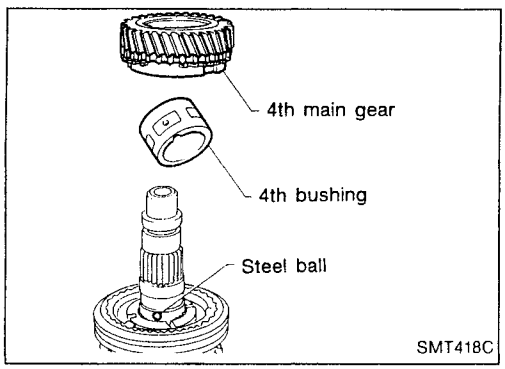

5. Remove 4th main gear, bushing and steel ball.
- **Take care not to lose steel ball.**

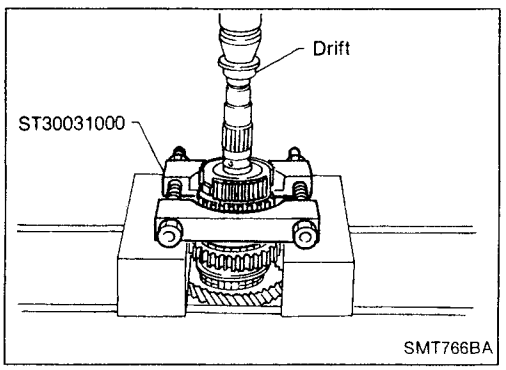

6. Remove 3rd & 4th synchronizer and 3rd main gear.

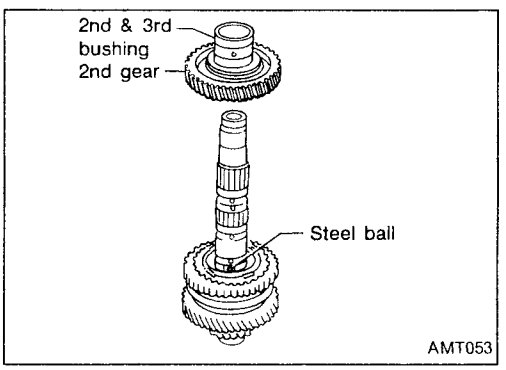

7. Remove 2nd & 3rd bushing and 2nd main gear.
- **Take care not to lose the steel ball.**

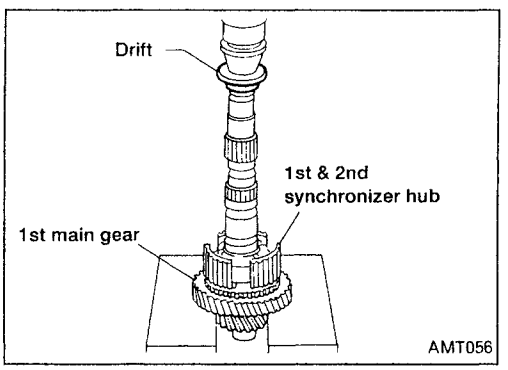

8. Remove 1st & 2nd synchronizer hub and 1st main gear.

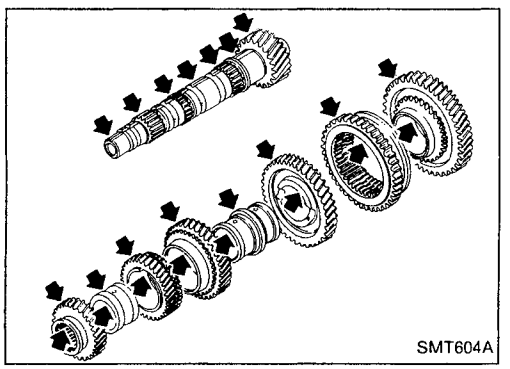

INSPECTION

Gear and shaft

- Check shaft for cracks, wear or bending.
- Check gears for excessive wear, chips or cracks.

MT

Simpo PDF Merge and Split Unregistered Version - http://www.simpopdf.com

Mainshaft and Gears (Cont'd)

Synchronizer

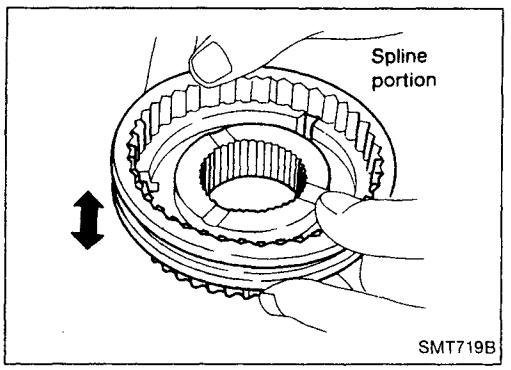

- Check spline portion of coupling sleeves, hubs and gears for wear or cracks.
- Check baulk rings for cracks or deformation.
- Check insert springs for deformation.

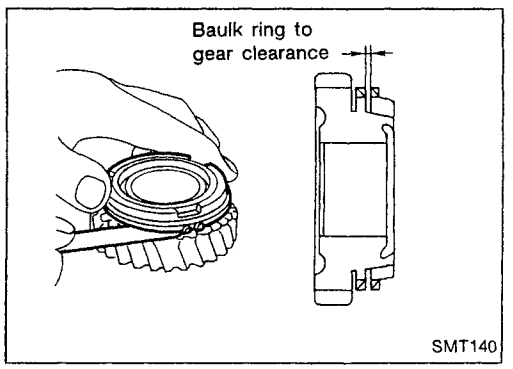

- Measure clearance between baulk ring and gear.
  Clearance between baulk rings and gears, for 1st and 4th gear only:
  Standard
  1st 0.95 - 1.45 mm (0.0374 - 0.0571 in)
  4th 0.90 - 1.45 mm (0.0354 - 0.0571 in)
  Wear limit
  0.7 mm (0.028 in)
- **2nd and 3rd gears have inner and outer baulk rings and so have different measurements.**

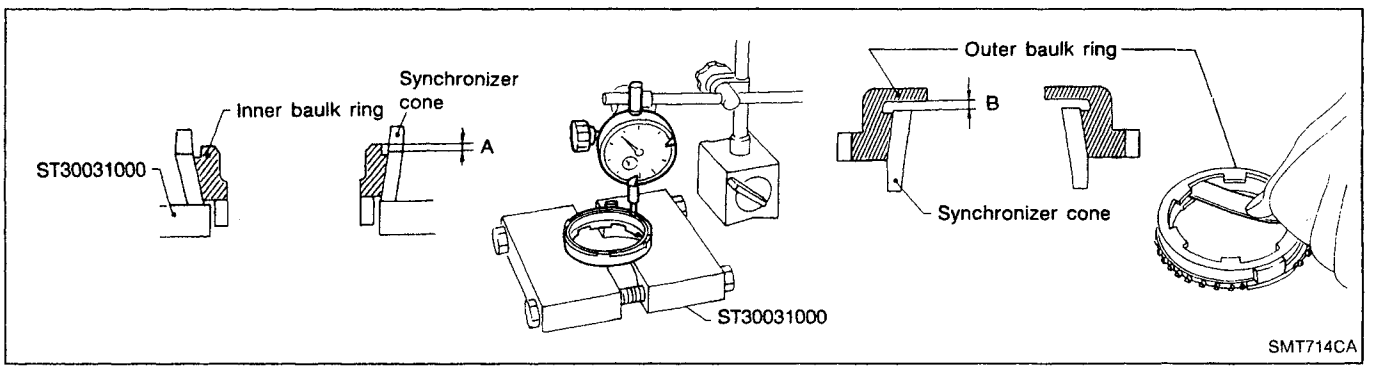

- Measure wear of 2nd and 3rd baulk rings.

a. Place inner baulk ring in position on synchronizer cone.
b. Hold baulk ring evenly against synchronizer cone and measure distance "A".
c. Place outer baulk ring in position on synchronizer cone.
d. Hold baulk ring evenly against synchronizer cone and measure distance "B".
   Standard:
   Inner-A 0.7 - 0.9 mm (0.028 - 0.035 in)
   Outer-B 0.6 - 1.1 mm (0.024 - 0.043 in)
   Wear limit:
   0.2 mm (0.008 in)
e. If distance "A" or "B" is smaller than the wear limit, replace baulk ring.

Simpo PDF Merge and Split Unregistered Version - http://www.simpopdf.com

Mainshaft and Gears (Cont'd)

Bearing

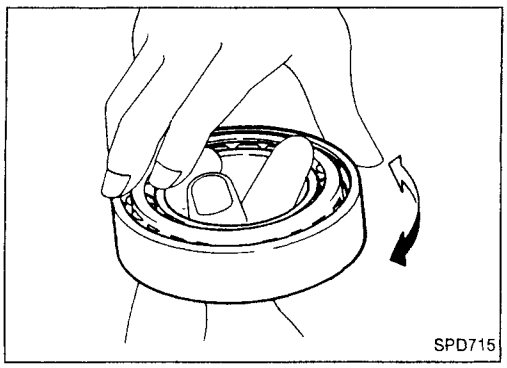

- Make sure bearings roll freely and are free from noise, cracks, pitting or wear.
- **The mainshaft front bearing cannot be re-used. It must be replaced once removed.**

ASSEMBLY

1. Install 1st gear needle bearing, 1st main gear and baulk ring.
2. Press on 1st & 2nd synchronizer hub.

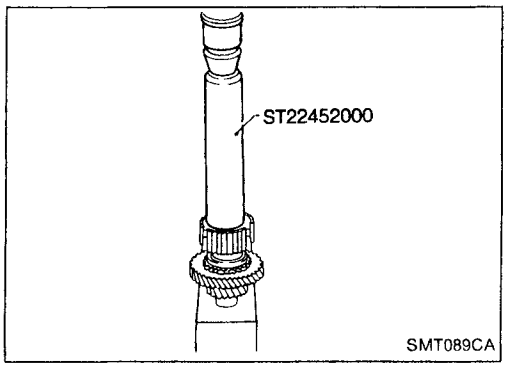

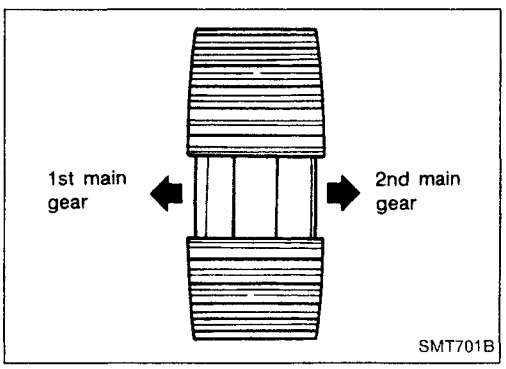

- **Ensure correct fitting of 1st & 2nd synchronizer hub.**

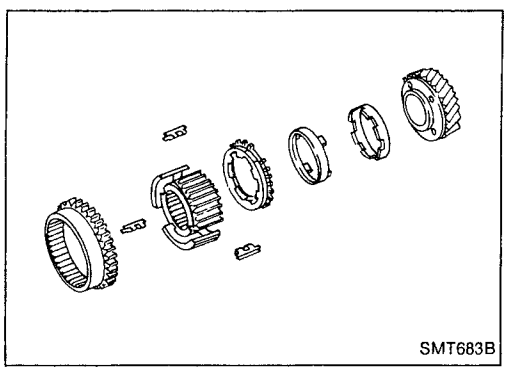

3. Install 2nd synchronizer cone, outer & inner baulk ring and reverse main gear (coupling sleeve).

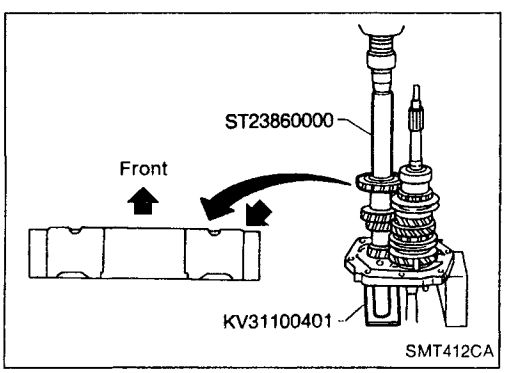

4. Install steel ball, 2nd main gear, 2nd & 3rd bushing.
- **Apply gear oil to 2nd & 3rd bushing before installing it.**
- **Apply multi-purpose grease to steel ball before installing it.**
- **2nd & 3rd bushing has a groove in which steel ball fits.**

MT

Simpo PDF Merge and Split Unregistered Version - http://www.simpopdf.com

Mainshaft and Gears (Cont'd)

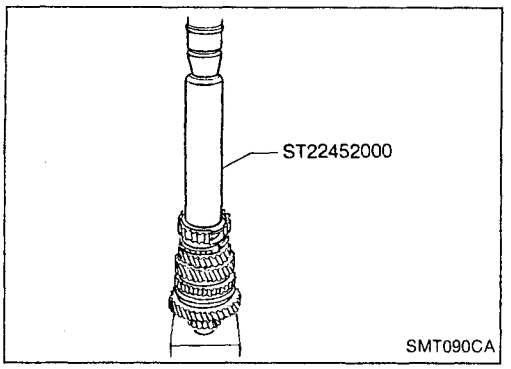

5. Install 3rd main gear, synchronizer cone, outer & inner baulk ring.
6. Press on 3rd & 4th synchronizer hub.

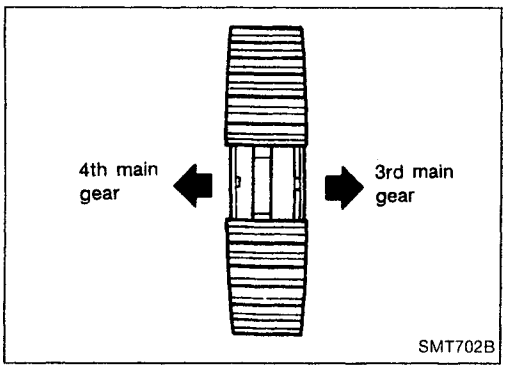

- **Ensure correct fitting of 3rd & 4th synchronizer hub.**

7. Install 3rd & 4th coupling sleeve and 4th baulk ring.

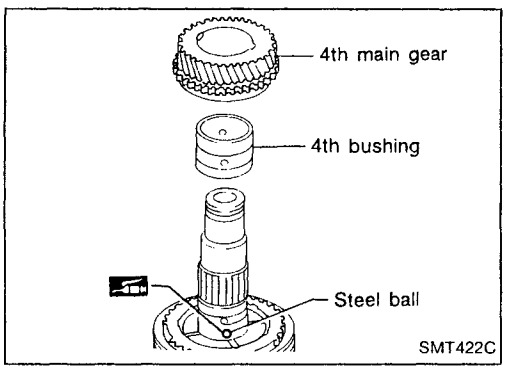

8. Install steel ball, 4th bushing and 4th main gear.
- **Apply multi-purpose grease to steel ball before installing it.**
- **4th bushing has a groove in which steel ball fits.**

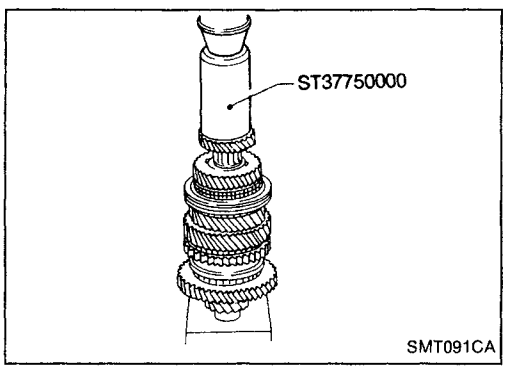

9. Press on 5th main gear.

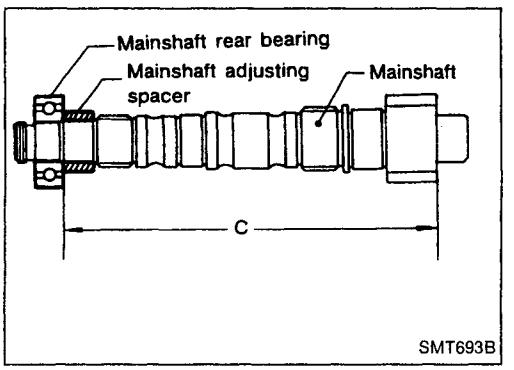

10. Select proper mainshaft bearing spacer to give correct bearing distance.
Bearing distance "C":
230.15 - 230.25 mm (9.0610 - 9.0649 in)
Spacers available:
Refer to SDS, MT-65.

Simpo PDF Merge and Split Unregistered Version - http://www.simpopdf.com

Mainshaft and Gears (Cont'd)

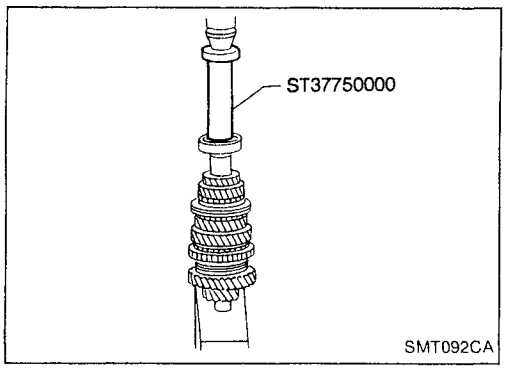

11. Press on mainshaft rear bearing.

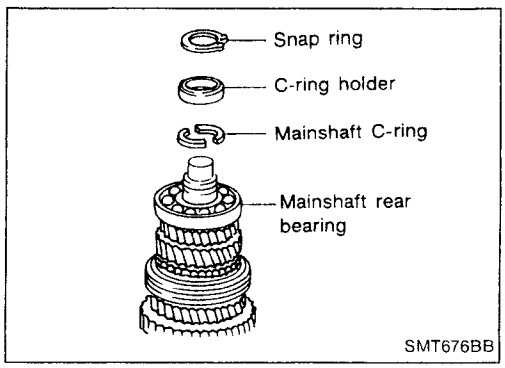

12. Select and install mainshaft C-ring that gives proper clearance of groove in mainshaft.
    Allowable clearance of groove:
    0 - 0.1 mm (0 - 0.004 in)
    Mainshaft C-rings:
    Refer to SDS, MT-65.
13. Install C-ring holder and snap ring.
14. Measure gear end play as the final check. Refer to "DISASSEMBLY", MT-42.

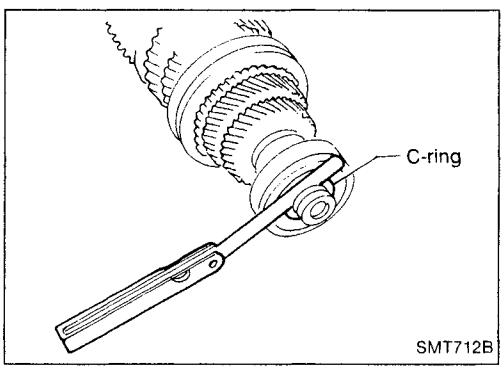

Final Drive

DISASSEMBLY

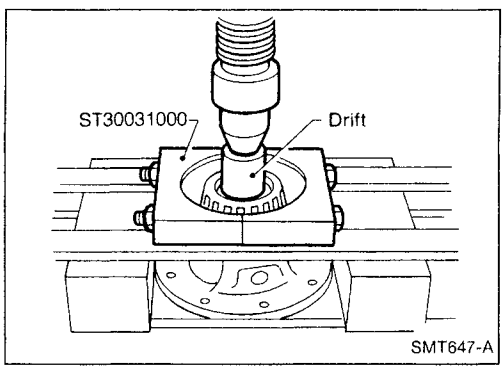

1. Remove final gear.
2. Remove speedometer drive gear by cutting it.
3. Press out differential side bearings.

- **Be careful not to mix up the right and left bearings.**

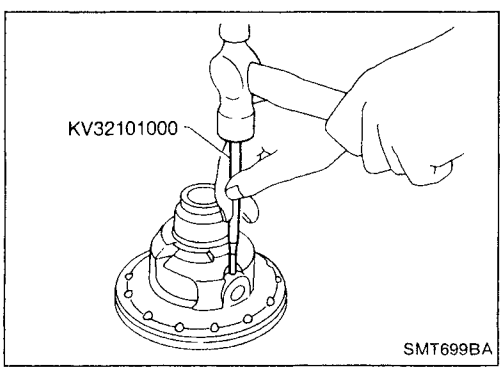

4. Drive out retaining pin and draw out pinion mate shaft.
5. Remove pinion mate gears and side gears.

MT

Simpo PDF Merge and Split Unregistered Version - http://www.simpopdf.com

Final Drive (Cont'd)

INSPECTION

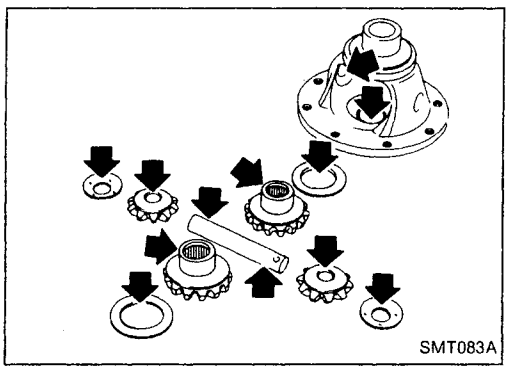
SMT083A

Gear, washer, shaft and case

- Check mating surfaces of differential case, side gears and pinion mate gears.
- Check washers for wear.

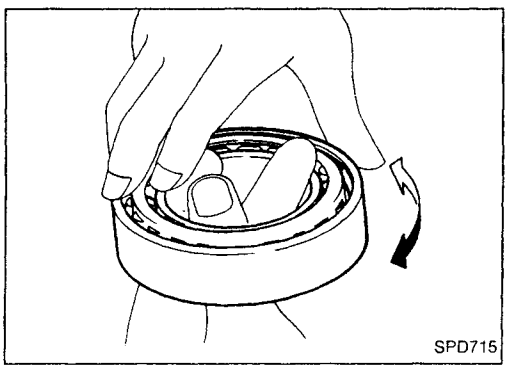
SPD715

Bearing

- Make sure bearings roll freely and are free from noise, cracks, pitting or wear.
- **When replacing tapered roller bearing, replace outer and inner race as a set.**

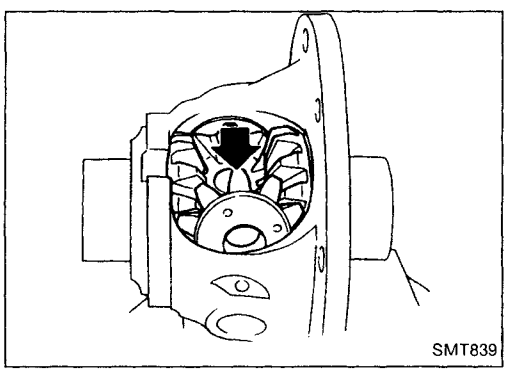
SMT839

ASSEMBLY

1. Attach side gear thrust washers to side gears, then install pinion mate washers and pinion mate gears in place.

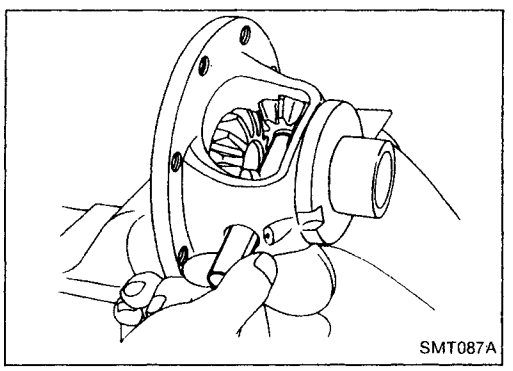
SMT087A

2. Insert pinion mate shaft.
- **When inserting, be careful not to damage pinion mate thrust washers.**

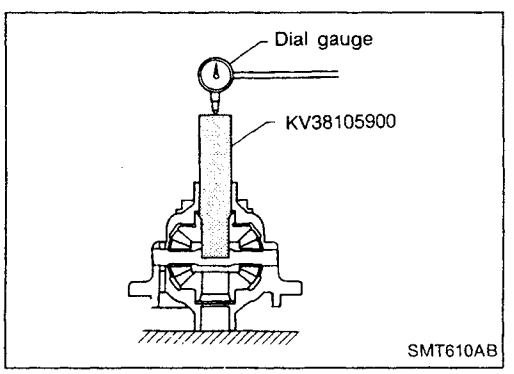

SMT610AB

3. Measure clearance between side gear and differential case with washers following the procedure below:

a. Set Tool and dial indicator on side gear.

Simpo PDF Merge and Split Unregistered Version - http://www.simpopdf.com

Final Drive (Cont'd)

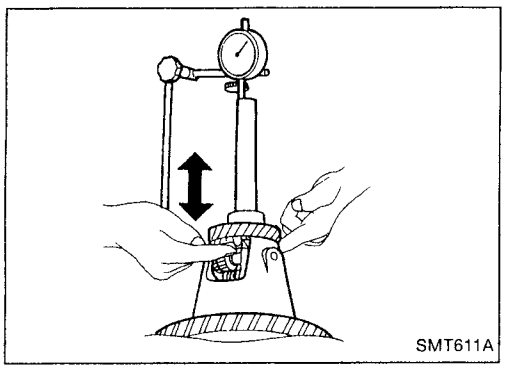

b. Move side gear up and down to measure dial indicator deflection. Always measure indicator deflection on both side gears.
Clearance between side gear and differential case with washers:
0.1 - 0.2 mm (0.004 - 0.008 in)

c. If not within specification, adjust clearance by changing thickness of side gear thrust washers.
Side gear thrust washer:
Refer to SDS, MT-65.

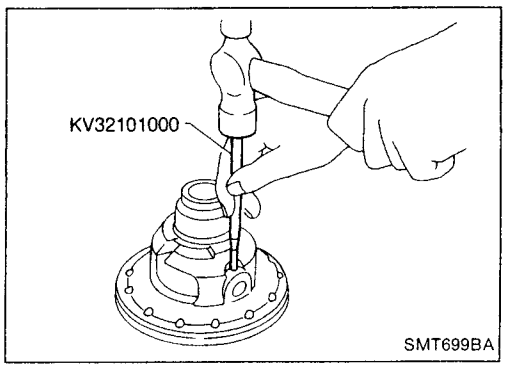

4. Install retaining pin.
- **Make sure that retaining pin is flush with case.**

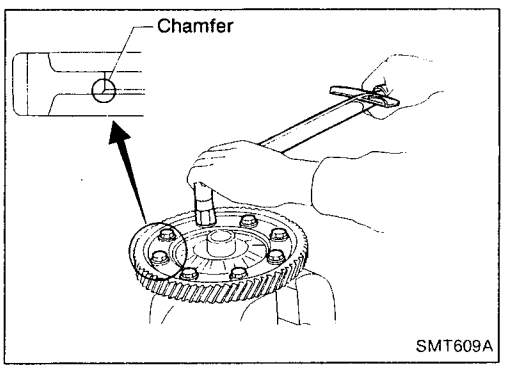

5. Install final gear.
- **Apply locking sealant to final gear fixing bolts before installing them.**

6. Install speedometer drive gear.

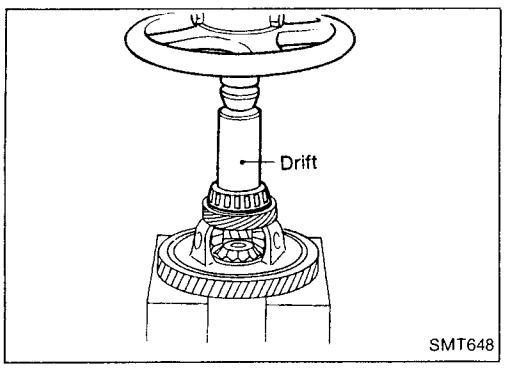

7. Press on differential side bearings.

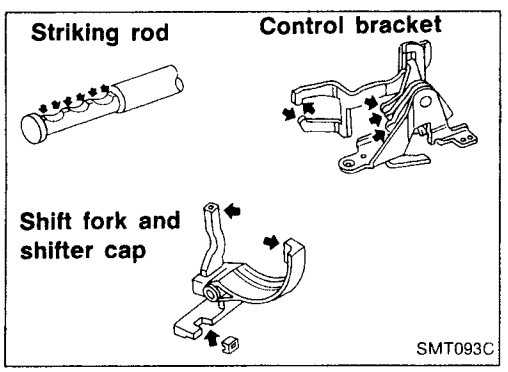

Shift Control Components

INSPECTION

- Check contact surface and sliding surface for wear, scratches, projections or other damage.

MT

Simpo PDF Merge and Split Unregistered Version - http://www.simpopdf.com

Shift Control Components (Cont'd)

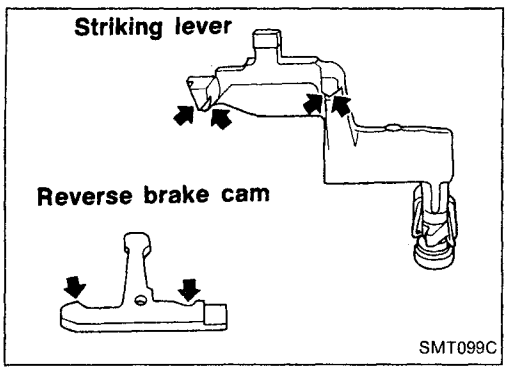

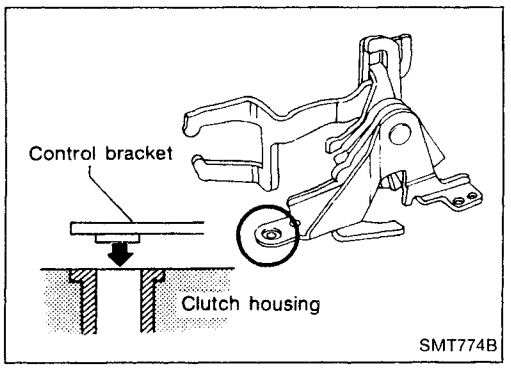

ADJUSTMENT OF INPUT SHAFT BRAKING MECHANISM

1. Install striking lever & rod, striking interlock assembly and control bracket on clutch housing exactly.

- **When installing control bracket on clutch housing, assure protrusion beneath bracket is correctly seated.**

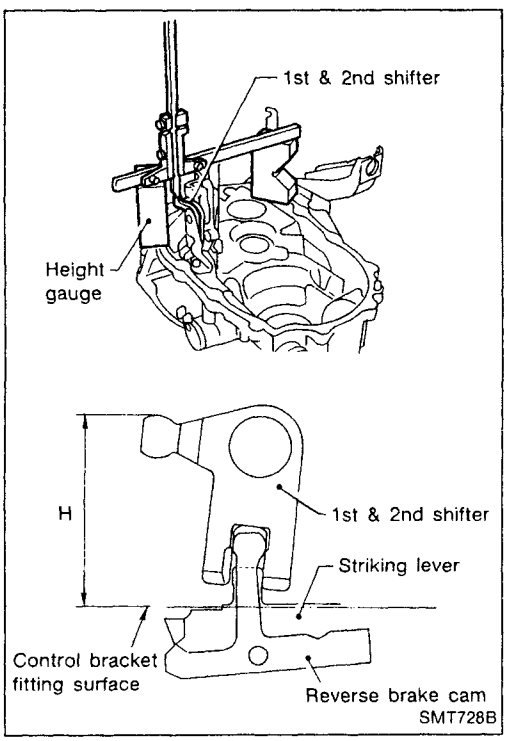

2. Measure maximum height "H" while shifting from neutral to reverse position.
   Maximum height "H":
   67.16 - 67.64 mm (2.6441 - 2.6630 in)

Simpo PDF Merge and Split Unregistered Version - http://www.simpopdf.com

Shift Control Components (Cont'd)

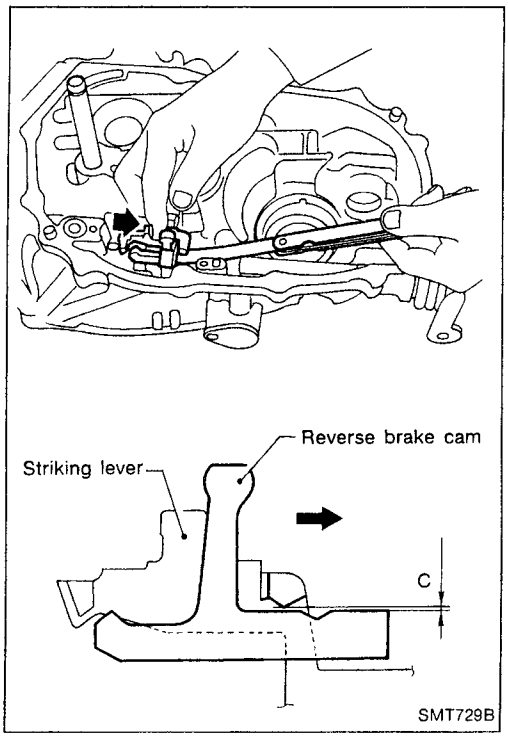

3. Measure clearance "C" between reverse brake cam and striking lever while shifting to reverse position.
   Clearance "C":
   0.05 - 0.125 mm (0.0020 - 0.0049 in)
   If "H" or "C" is not within specification, replace the following parts as a set.
   - Striking lever assembly
   - Striking interlock assembly (This includes reverse brake cam.)
   - Control bracket assembly

MT

Case Components

REMOVAL AND INSTALLATION

Input shaft oil seal

1. Drive out input shaft oil seal.

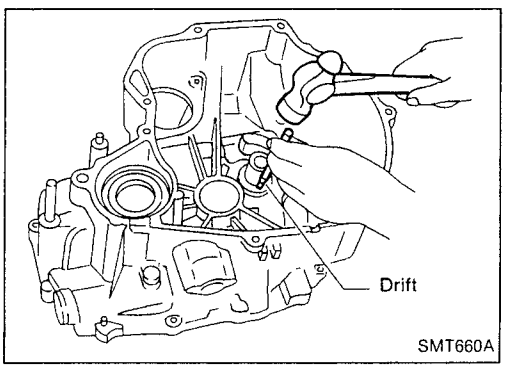

2. Install input shaft oil seal.
   - **Apply multi-purpose grease to seal lip of oil seal before installing.**

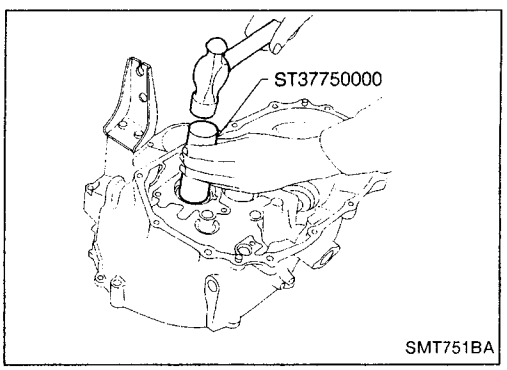

Input shaft rear bearing

1. Remove welch plug from transmission case.

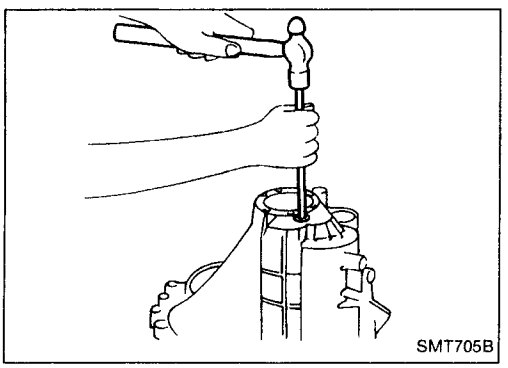

Simpo PDF Merge and Split Unregistered Version - http://www.simpopdf.com

Case Components (Cont'd)

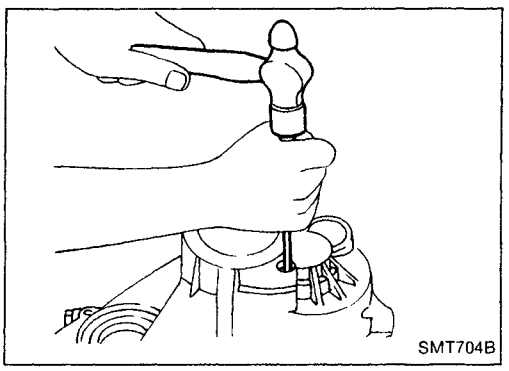

2. Remove input shaft rear bearing by tapping it from welch plug hole.

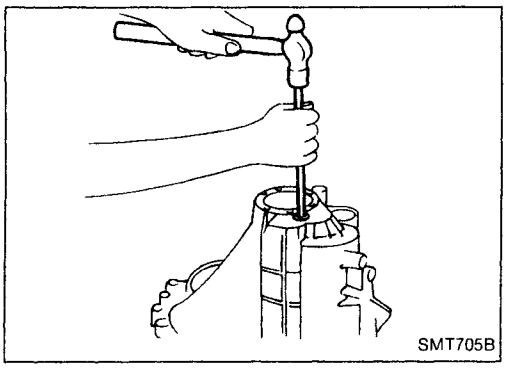

3. Install welch plug.
- **Apply recommended sealant to mating surface of transmission case.**

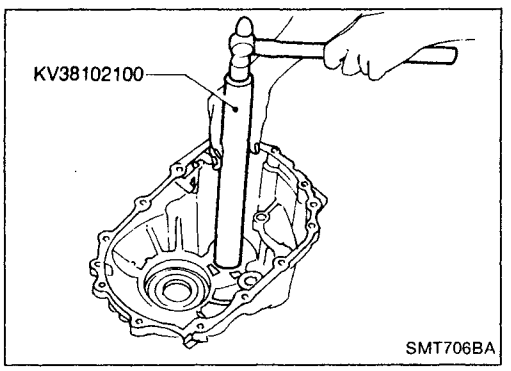

4. Install input shaft rear bearing.

Mainshaft front bearing and oil channel

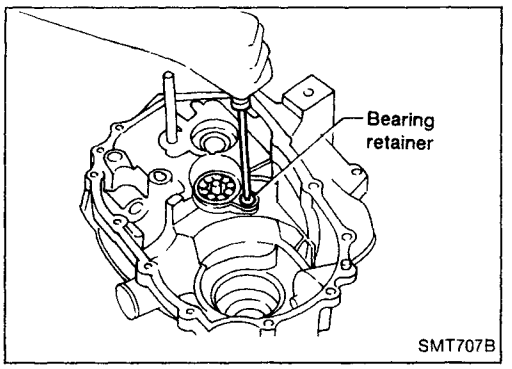

1. Remove mainshaft front bearing retainer.

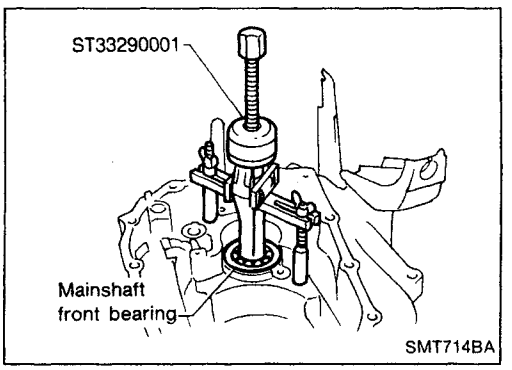

2. Remove mainshaft front bearing.
3. Remove oil channel.

Simpo PDF Merge and Split Unregistered Version - http://www.simpopdf.com

Case Components (Cont'd)

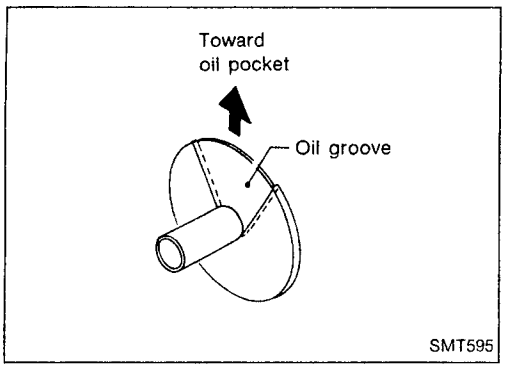

4. Install oil channel.
- **Ensure the oil groove faces the oil pocket.**

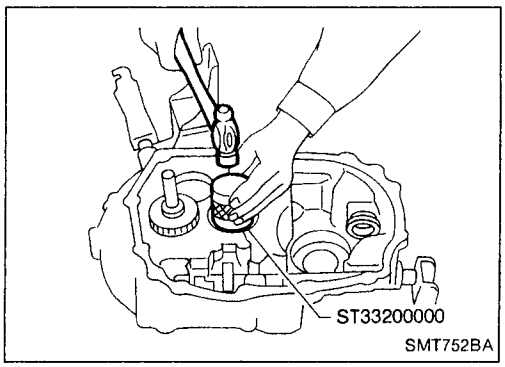

5. Install mainshaft front bearing.
6. Install mainshaft front bearing retainer.
- **Apply locking sealant to thread of screw before installation.**

MT

Simpo PDF Merge and Split Unregistered Version - http://www.simpopdf.com

Differential Side Bearing Preload

If any of the following parts are replaced, adjust differential side bearing preload.

- **Differential case**
- **Differential side bearing**
- **Clutch housing**
- **Transmission case**

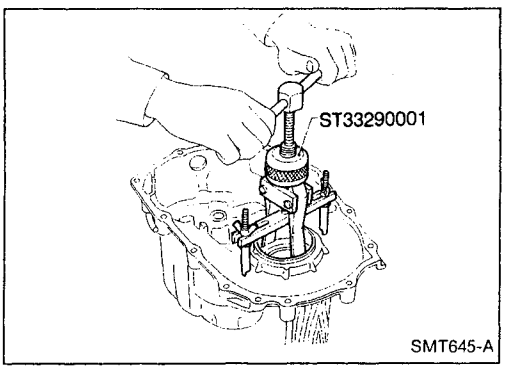

1. Remove differential side bearing outer race (transmission case side) and shim.

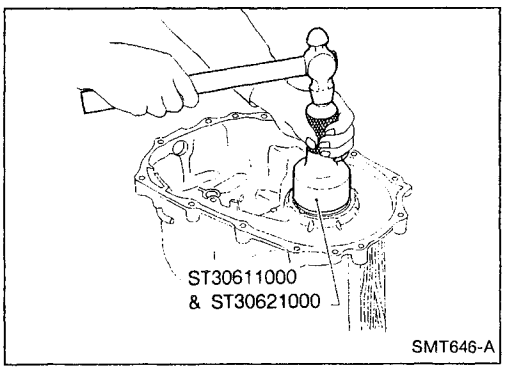

2. Install differential side bearing outer race without shim.
3. Install final drive assembly on clutch housing.
4. Install transmission case on clutch housing.

- **Tighten transmission case fixing bolts to the specified torque. Refer to MT-33.**

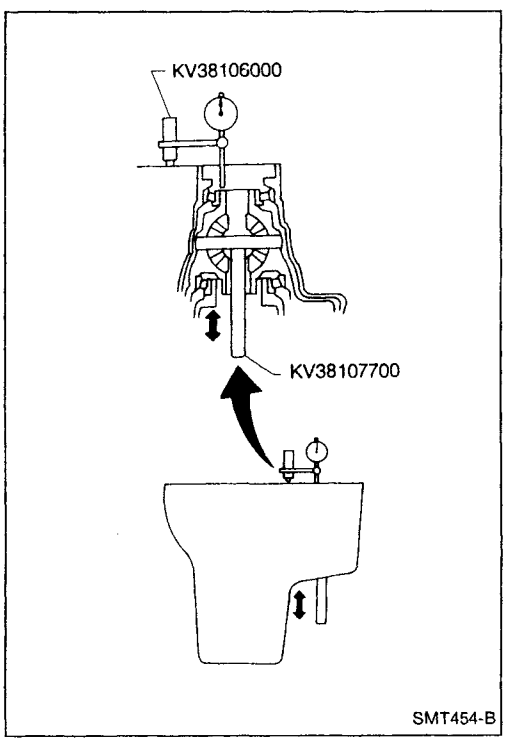

5. Set dial indicator on front end of differential case.
6. Insert Tool all the way into differential side gear.
7. Move Tool up and down and measure dial indicator deflection.
8. Select shim considering bearing preload.

- **Suitable shim thickness = Dial indicator deflection + Specified bearing preload**

Differential side bearing preload and adjusting shims:
Refer to SDS, MT-66.
Bearing preload:
0.25 - 0.30 mm (0.0098 - 0.0118 in)

9. Install selected shim and differential side bearing outer race.
10. Check differential side bearing turning torque.

a. Install final drive assembly on clutch housing.
b. Install transmission case on clutch housing.

- **Tighten transmission case fixing bolts to the specified torque. Refer to MT-33.**

Simpo PDF Merge and Split Unregistered Version - http://www.simpopdf.com

Differential Side Bearing Preload (Cont'd)

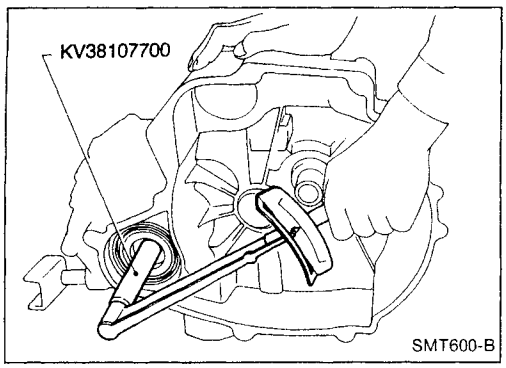

c. Measure turning torque of final drive assembly.

Turning torque of final drive assembly
(New bearing):
2.9 - 6.9 N·m (30 - 70 kg-cm, 26 - 61 in-lb)

- **When old bearing is used again, turning torque will be slightly less than the above.**
- **Make sure torque is close to the specified range.**
- **Changes in turning torque of final drive assembly per revolution should be within 1.0 N·m (10 kg-cm, 8.7 in-lb) without binding.**

MT

Simpo PDF Merge and Split Unregistered Version - http://www.simpopdf.com

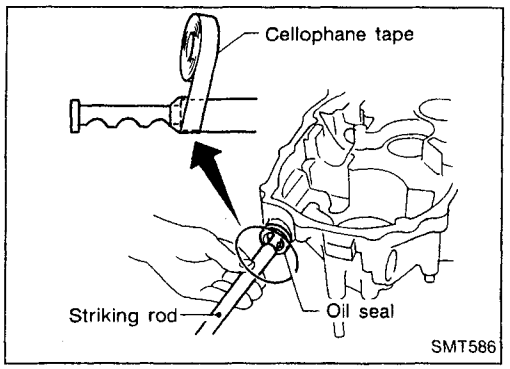

1. Install striking rod, lever and interlock.
- **Tape edges of striking rod to avoid damaging oil seal lip during installation. When taped edges of striking rod are past the oil seal, remove tape.**

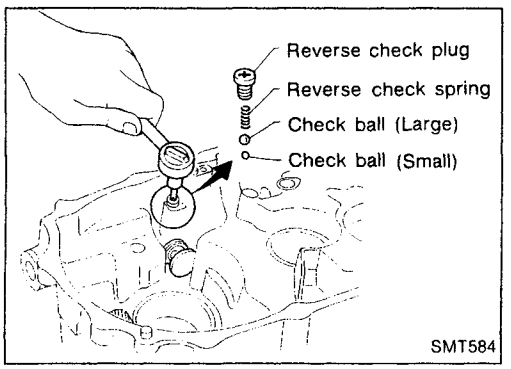

2. Install reverse check sleeve assembly.
3. Install check balls, reverse check spring and check plug.

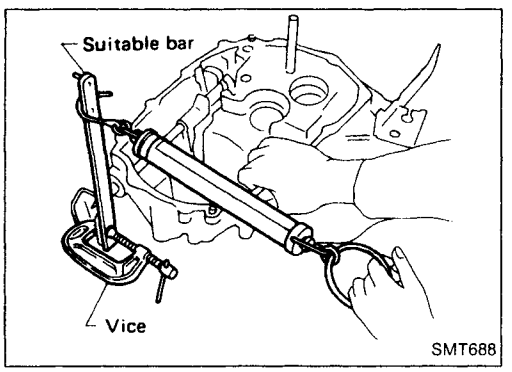

4. Check reverse check turning torque (At striking rod).
   Reverse check turning torque (At striking rod):
   4.9 - 7.4 N·m (50 - 75 kg-cm, 43 - 65 in-lb)
- If not within specification, select another check plug having a different length and reinstall it.
  Available reverse check plugs:
  Refer to SDS, MT-64.
5. Install selected reverse check plug.
- **Apply locking sealant to thread of plug before installing it.**

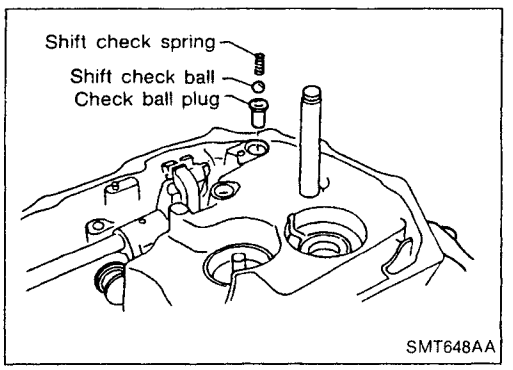

6. Install check ball plug, shift check ball and shift check spring.
7. Install oil pocket.

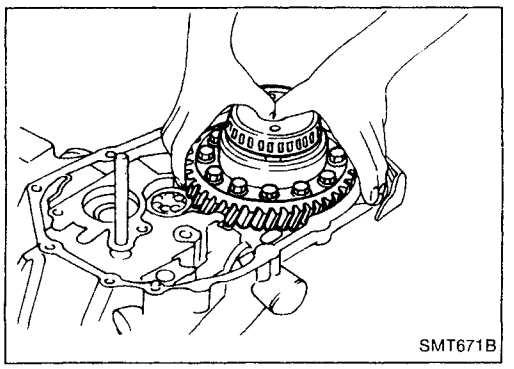

8. Install gear components onto clutch housing.
a. Install final drive assembly.

Simpo PDF Merge and Split Unregistered Version - http://www.simpopdf.com

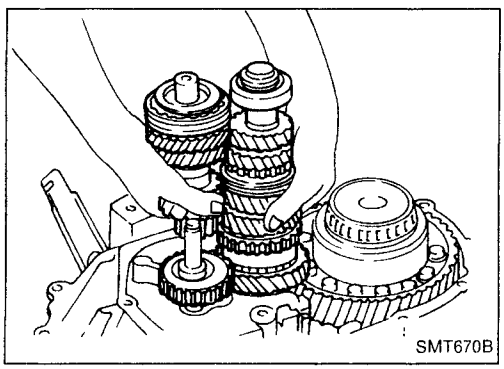
SMT670B

b. Install input shaft assembly with bearing retainer, mainshaft assembly and reverse idler gear.
- **Be careful not to damage oil seal lip with splines of input shaft.**
- **Be careful not to damage oil channel when inserting mainshaft into clutch housing.**

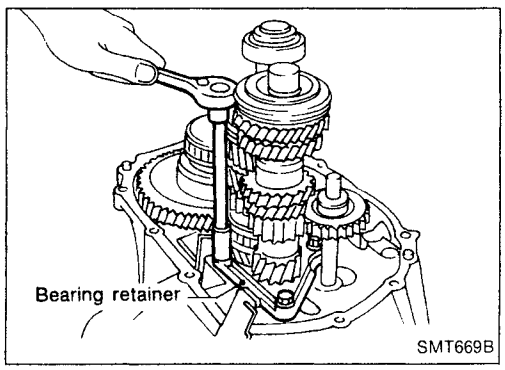

SMT669B

c. Install input shaft front bearing retainer.

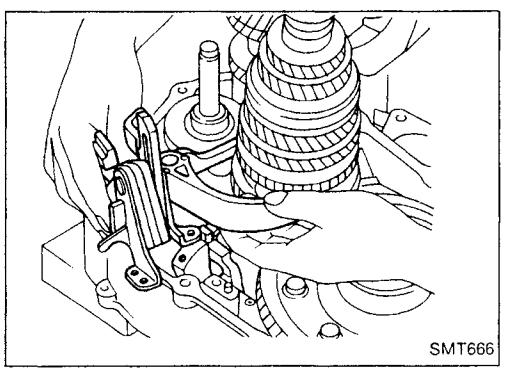
SMT666

9. Apply grease to shifter caps, then install it to control bracket. Install control bracket with 1st & 2nd shift fork.

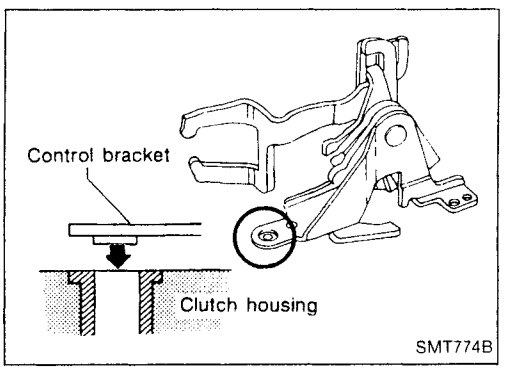

SMT774B

- When installing control bracket on clutch housing, ensure bracket is correctly seated.

10. Install 3rd & 4th and 5th shift forks.

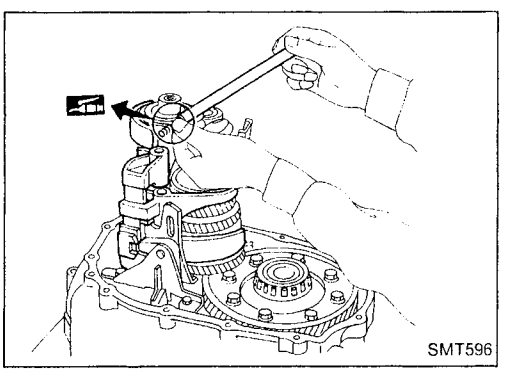
SMT596

11. Insert fork shaft.
- **Apply multi-purpose grease to support spring before installing.**

12. Install reverse idler spacer.

Simpo PDF Merge and Split Unregistered Version - http://www.simpopdf.com

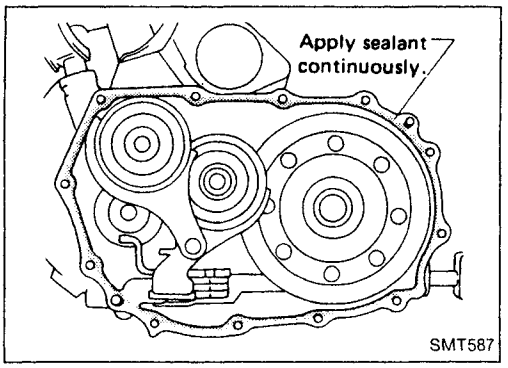

13. Apply recommended sealant to mating surface of clutch housing.

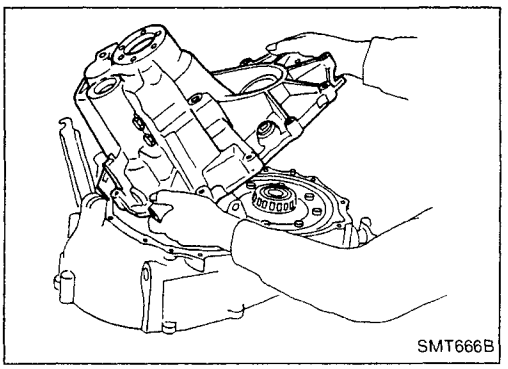

14. Install transmission case on clutch housing.

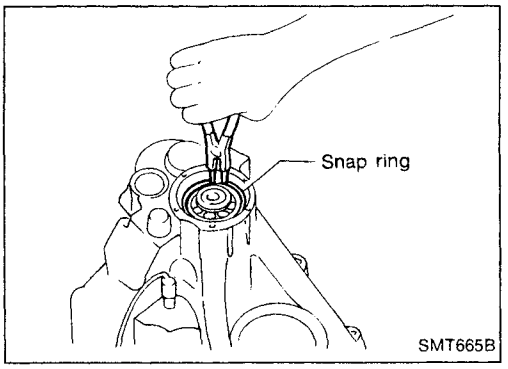

15. Install mainshaft front bearing snap ring.

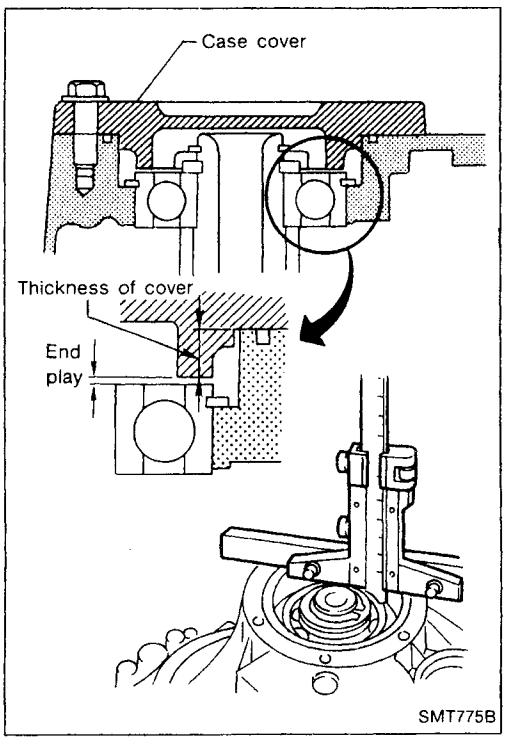

16. Check mainshaft bearing end play.

Mainshaft bearing end play:

0 - 0.1 mm (0 - 0.004 in)

- Make sure that bearing is properly seated. If not, tap main shaft end with a rubber hammer.
- If not within specification, select another case cover having a different thickness.

Available case covers:

Refer to SDS, MT-64.

Simpo PDF Merge and Split Unregistered Version - http://www.simpopdf.com

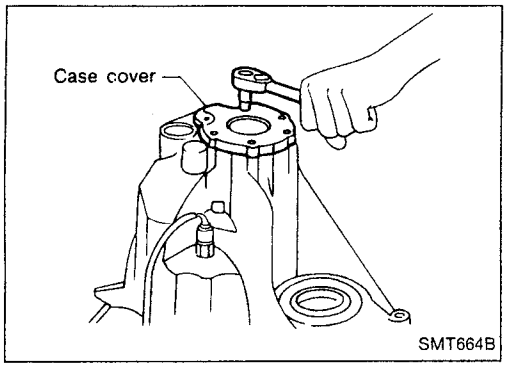

17. Install O-ring and case cover on transmission case.
- **Apply recommended sealant to mating surface of transmission case.**

Simpo PDF Merge and Split Unregistered Version - http://www.simpopdf.com

General Specifications

TRANSAXLE

Applied model			Europe	Except for Europe and Australia	Europe	Except for Europe	Australia	Europe
			GA14DE	GA15DE	GA16DE		SR20DE	CD20
			With catalyzer			Without catalyzer		
Transaxle model			RS5F30A		RS5F31A		RS5F32A	RS5F31A
Number of speeds			5					
Synchromesh type			Warner					
Shift pattern								
Gear ratio	1st		3.333	3.333	3.063		3.063	3.333
	2nd		1.955	1.955	1.826		1.826	1.955
	3rd		1.286	1.286	1.286		1.286	1.286
	4th		0.902	0.926	0.975		0.975	0.902
	5th		0.733	0.756	0.810		0.756	0.756
	Reverse		3.417	3.417	3.417		3.153	3.417
Number of teeth	Input gear	1st	15	15	16		16	15
		2nd	22	22	23		23	22
		3rd	28	28	28		28	28
		4th	41	41	40		40	41
		5th	45	45	42		45	45
		Rev.	12	12	12		13	12
	Main gear	1st	50	50	49		49	50
		2nd	43	43	42		42	43
		3rd	36	36	36		36	36
		4th	37	38	39		39	37
		5th	33	34	34		34	34
		Rev.	41	41	41		41	41
	Reverse idler gear		30				31	30
Oil capacity		ℓ (Imp pt)	2.8 - 3.0 (4-7/8 - 5-1/4)		2.9 - 3.2 (5-1/8 - 5-5/8)		3.7 - 3.9 (6-1/2 - 6-7/8)	2.9 - 3.2 (5-1/8 - 5-5/8)
Oil level*		mm (in)	58 - 66 (2.28 - 2.60)		57 - 66 (2.24 - 2.60)		39 - 44 (1.54 - 1.73)	54 - 61 (2.13 - 2.40)

*: Refer to MA section.

FINAL GEAR

Engine		GA14DE	GA15DE	GA16DE	SR20DE	CD20
Final gear ratio		4.167	3.789	4.167	4.176	3.650
Number of teeth	Final gear/Pinion	75/18	72/19	75/18	71/17	73/20
	Side gear/Pinion mate gear	14/10	14/10	16/10	14/10	16/10

Simpo PDF Merge and Split Unregistered Version - http://www.simpopdf.com

Inspection and Adjustment — RS5F30A & RS5F31A

GEAR END PLAY

Gear	End play mm (in)
1st main gear	0.18 - 0.31 (0.0071 - 0.0122)
2nd main gear	0.20 - 0.30 (0.0079 - 0.0118)
3rd main gear	0.20 - 0.30 (0.0079 - 0.0118)
4th main gear	0.20 - 0.30 (0.0079 - 0.0118)
5th input gear	0.18 - 0.31 (0.0071 - 0.0122)

CLEARANCE BETWEEN BAULK RING AND GEAR

1st, 2nd, 3rd, 4th, 5th baulk ring

Unit: mm (in)

Standard	Wear limit
1.0 - 1.35 (0.0394 - 0.0531)	0.7 (0.028)

AVAILABLE CHECK PLUGS

Reverse check plug

Reverse check turning torque (At striking rod) N·m (kg-cm, in-lb)	4.9 - 7.4 (50 - 75, 43 - 65)
Thickness mm (in)	Part number
8.3 (0.327)	32188-M8001*
7.1 (0.280)	32188-M8002
7.7 (0.303)	32188-M8003
8.9 (0.350)	32188-M8004

* Standard size check plug

AVAILABLE SNAP RINGS

Input shaft front bearing

Allowable clearance	0 - 0.1 mm (0 - 0.004 in)
Thickness mm (in)	Part number
1.27 (0.0500)	32204-M8004
1.33 (0.0524)	32204-M8005
1.39 (0.0547)	32204-M8006
1.45 (0.0571)	32204-M8007

Input shaft 5th synchronizer hub

Allowable clearance	0 - 0.1 mm (0 - 0.004 in)
Thickness mm (in)	Part number
2.00 (0.0787)	32311-M8812
2.05 (0.0807)	32311-M8813
2.10 (0.0827)	32311-M8814
2.15 (0.0846)	32311-M8815
2.20 (0.0866)	32311-M8816
2.25 (0.0886)	32311-M8817
2.30 (0.0906)	32311-M8818

AVAILABLE C-RINGS

Mainshaft C-ring

Allowable clearance		0 - 0.1 mm (0 - 0.004 in)	
Thickness mm (in)	Part number	Thickness mm (in)	Part number
3.63 (0.1429)	32348-M8800	4.12 (0.1622)	32348-M8807
3.70 (0.1457)	32348-M8801	4.19 (0.1650)	32348-M8808
3.77 (0.1484)	32348-M8802	4.26 (0.1677)	32348-M8809
3.84 (0.1512)	32348-M8803	4.33 (0.1705)	32348-M8810
3.91 (0.1539)	32348-M8804	4.40 (0.1732)	32348-M8811
3.98 (0.1567)	32348-M8805	4.47 (0.1760)	32348-M8812
4.05 (0.1594)	32348-M8806	4.54 (0.1787)	32348-M8813

Simpo PDF Merge and Split Unregistered Version - http://www.simpopdf.com

Inspection and Adjustment — RS5F30A & RS5F31A (Cont'd)

AVAILABLE WASHERS

Differential side gear thrust washer

- **GA16DE and CD20 engine models**

Allowable clearance between side gear and differential case with washer	0.1 - 0.2 mm (0.004 - 0.008 in)

Thickness mm (in)	Part number
0.75 - 0.80 (0.0295 - 0.0315)	38424-D2111
0.80 - 0.85 (0.0315 - 0.0335)	38424-D2112
0.85 - 0.90 (0.0335 - 0.0354)	38424-D2113
0.90 - 0.95 (0.0354 - 0.0374)	38424-D2114
0.95 - 1.00 (0.0374 - 0.0394)	38424-D2115

- **Except for GA16DE and CD20 engine models**

Allowable clearance between side gear and differential case with washer	0.1 - 0.2 mm (0.004 - 0.008 in)

Thickness mm (in)	Part number
0.76 - 0.81 (0.0299 - 0.0319)	38424-01M10
0.81 - 0.86 (0.0319 - 0.0339)	38424-01M11
0.86 - 0.91 (0.0339 - 0.0358)	38424-01M12
0.91 - 0.96 (0.0358 - 0.0378)	38424-01M13

AVAILABLE SHIMS — MAINSHAFT AND DIFFERENTIAL SIDE BEARING PRELOAD AND ADJUSTING SHIM

Bearing preload (Reused bearing)

Unit: mm (in)

	Mainshaft bearing	Differential side bearing
RS5F30A	0.18 - 0.23 (0.0071 - 0.0091)	0.24 - 0.32 (0.0094 - 0.0126)
RS5F31A	0.18 - 0.27 (0.0071 - 0.0106)	0.20 - 0.25 (0.0079 - 0.0098)

Turning torque (New bearing)

Unit: N·m (kg-cm, in-lb)

	Final drive only	Total (Final drive + Mainshaft)
RS5F30A	2.0 - 7.8 (20 - 80, 17 - 69)	3.9 - 12.3 (40 - 125, 35 - 109)
RS5F31A	2.0 - 7.8 (20 - 80, 17 - 69)	3.9 - 13.7 (40 - 140, 35 - 122)

Mainshaft bearing adjusting shims

Thickness mm (in)	Part number
0.10 (0.0039)	32137-M8000
0.15 (0.0059)	32137-M8001
0.20 (0.0079)	32137-M8002
0.25 (0.0098)	32137-M8003
0.30 (0.0118)	32137-M8004
0.35 (0.0138)	32137-M8005
0.40 (0.0157)	32137-M8006
0.45 (0.0177)	32137-M8007
0.50 (0.0197)	32137-M8008
0.55 (0.0217)	32137-M8009
0.60 (0.0236)	32137-M8010
0.65 (0.0256)	32137-M8011
0.70 (0.0276)	32137-M8012
0.75 (0.0295)	32137-M8013
0.80 (0.0315)	32137-M8014
0.85 (0.0335)	32137-M8015
0.90 (0.0354)	32137-M8016
0.95 (0.0374)	32137-M8017
1.00 (0.0394)	32137-M8018

Table for selecting mainshaft bearing adjusting shim

Unit: mm (in)

Measured distance	Suitable shim thickness
2.35 - 2.40 (0.0925 - 0.0945)	0.10 (0.0039)
2.40 - 2.45 (0.0945 - 0.0965)	0.15 (0.0059)
2.45 - 2.50 (0.0965 - 0.0984)	0.20 (0.0079)
2.50 - 2.55 (0.0984 - 0.1004)	0.25 (0.0098)
2.55 - 2.60 (0.1004 - 0.1024)	0.30 (0.0118)
2.60 - 2.65 (0.1024 - 0.1043)	0.35 (0.0138)
2.65 - 2.70 (0.1043 - 0.1063)	0.40 (0.0157)
2.70 - 2.75 (0.1063 - 0.1083)	0.45 (0.0177)
2.75 - 2.80 (0.1083 - 0.1102)	0.50 (0.0197)
2.80 - 2.85 (0.1102 - 0.1122)	0.55 (0.0217)
2.85 - 2.90 (0.1122 - 0.1142)	0.60 (0.0236)
2.90 - 2.95 (0.1142 - 0.1161)	0.65 (0.0256)
2.95 - 3.00 (0.1161 - 0.1181)	0.70 (0.0276)
3.00 - 3.05 (0.1181 - 0.1201)	0.75 (0.0295)
3.05 - 3.10 (0.1201 - 0.1220)	0.80 (0.0315)
3.10 - 3.15 (0.1220 - 0.1240)	0.85 (0.0335)
3.15 - 3.20 (0.1240 - 0.1260)	0.90 (0.0354)
3.20 - 3.25 (0.1260 - 0.1280)	0.95 (0.0374)
3.25 - 3.30 (0.1280 - 0.1299)	1.00 (0.0394)

Simpo PDF Merge and Split Unregistered Version - http://www.simpopdf.com

Inspection and Adjustment — RS5F30A & RS5F31A (Cont'd)

Differential side bearing adjusting shims

Thickness mm (in)	Part number
0.44 (0.0173)	38454-M8000
0.48 (0.0189)	38454-M8001
0.56 (0.0220)	38454-M8003
0.60 (0.0236)	38454-M8004
0.64 (0.0252)	38454-M8005
0.68 (0.0268)	38454-M8006
0.72 (0.0283)	38454-M8007
0.76 (0.0299)	38454-M8008
0.80 (0.0315)	38454-M8009
0.84 (0.0331)	38454-M8010
0.88 (0.0346)	38454-M8011

Simpo PDF Merge and Split Unregistered Version - http://www.simpopdf.com

Inspection and Adjustment — RS5F32A

GEAR END PLAY

Gear	End play mm (in)
1st main gear	0.18 - 0.31 (0.0071 - 0.0122)
2nd main gear	0.20 - 0.30 (0.0079 - 0.0118)
3rd main gear	0.20 - 0.30 (0.0079 - 0.0118)
4th main gear	0.20 - 0.30 (0.0079 - 0.0118)
5th input gear	0.18 - 0.31 (0.0071 - 0.0122)

CLEARANCE BETWEEN BAULK RING AND GEAR

1st, 4th, 5th baulk ring

Unit: mm (in)

	Standard	Wear limit
1st	0.95 - 1.45 (0.0374 - 0.0571)	0.7 (0.028)
4th	0.90 - 1.45 (0.0354 - 0.0571)	
5th	0.90 - 1.50 (0.0354 - 0.0591)	

2nd and 3rd baulk ring

Unit: mm (in)

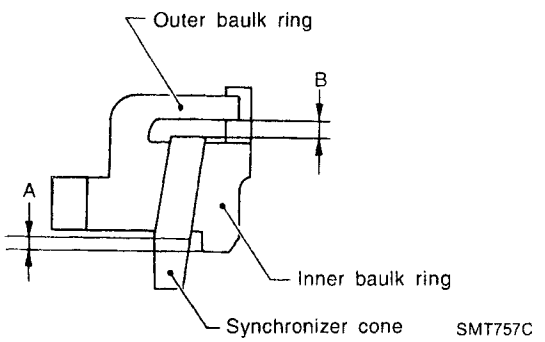

Dimension	Standard	Wear limit
A	0.7 - 0.9 (0.028 - 0.035)	0.2 (0.008)
B	0.6 - 1.1 (0.024 - 0.043)	

AVAILABLE REVERSE CHECK PLUGS AND CASE COVERS

Reverse check plug

Reverse check turning torque (At striking rod)	4.9 - 7.4 N·m (50 - 75 kg-cm, 43 - 65 in-lb)
Length mm (in)	Part number
8.3 (0.327)	32188-M8001*
7.1 (0.280)	32188-M8002
7.7 (0.303)	32188-M8003
8.9 (0.350)	32188-M8004

* Standard size check plug

Case cover

Main shaft bearing end play	0 - 0.1 mm (0 - 0.004 in)
Thickness mm (in)	Part number
10.78 (0.4244)	32131-50J00
10.83 (0.4264)	32131-50J01
10.88 (0.4283)	32131-50J02
10.93 (0.4303)	32131-50J03
10.98 (0.4323)	32131-50J04
11.03 (0.4343)	32131-50J05

Simpo PDF Merge and Split Unregistered Version - http://www.simpopdf.com

Inspection and Adjustment — RS5F32A (Cont'd)

AVAILABLE SNAP RINGS

Input shaft front bearing

Allowable clearance	0 - 0.1 mm (0 - 0.004 in)
Thickness mm (in)	Part number
1.27 (0.0500)	32204-M8004
1.33 (0.0524)	32204-M8005
1.39 (0.0547)	32204-M8006
1.45 (0.0571)	32204-M8007

Input shaft 5th synchronizer hub

Allowable clearance	0 - 0.1 mm (0 - 0.004 in)
Thickness mm (in)	Part number
2.00 (0.0787)	32311-M8812
2.05 (0.0807)	32311-M8813
2.10 (0.0827)	32311-M8814
2.15 (0.0846)	32311-M8815
2.20 (0.0866)	32311-M8816
2.25 (0.0886)	32311-M8817
2.30 (0.0906)	32311-M8818

AVAILABLE C-RINGS

Mainshaft C-ring

Allowable clearance	0 - 0.1 mm (0 - 0.004 in)
Thickness mm (in)	Part number
4.45 (0.1752)	32348-50J00
4.52 (0.1780)	32348-50J01
4.59 (0.1807)	32348-50J02
4.66 (0.1835)	32348-50J03
4.73 (0.1862)	32348-50J04
4.80 (0.1890)	32348-50J05
4.87 (0.1917)	32348-50J06
4.94 (0.1945)	32348-50J07

AVAILABLE SPACERS

Mainshaft bearing adjusting spacer

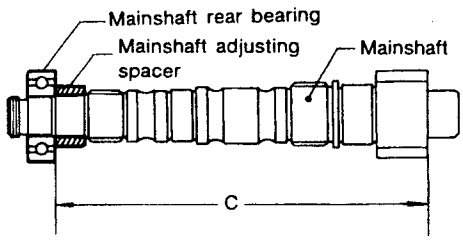

SMT693B

Bearing distance "C"	230.15 - 230.25 mm (9.0610 - 9.0649 in)
Thickness mm (in)	Part number
18.91 (0.7445)	32347-50J00
18.98 (0.7472)	32347-50J01
19.05 (0.7500)	32347-50J02
19.12 (0.7528)	32347-50J03
19.19 (0.7555)	32347-50J04
19.26 (0.7583)	32347-50J05
19.33 (0.7610)	32347-50J06
19.40 (0.7638)	32347-50J07
19.47 (0.7665)	32347-50J08

AVAILABLE WASHERS

Differential side gear thrust washer

Allowable clearance between side gear and differential case with washer	0.1 - 0.2 mm (0.004 - 0.008 in)
Thickness mm (in)	Part number
0.75 - 0.80 (0.0295 - 0.0315)	38424-D2111
0.80 - 0.85 (0.0315 - 0.0335)	38424-D2112
0.85 - 0.90 (0.0335 - 0.0354)	38424-D2113
0.90 - 0.95 (0.0354 - 0.0374)	38424-D2114
0.95 - 1.00 (0.0374 - 0.0394)	38424-D2115

Simpo PDF Merge and Split Unregistered Version - http://www.simpopdf.com

Inspection and Adjustment — RS5F32A (Cont'd)

INPUT SHAFT BRAKING MECHANISM

Reverse brake cam

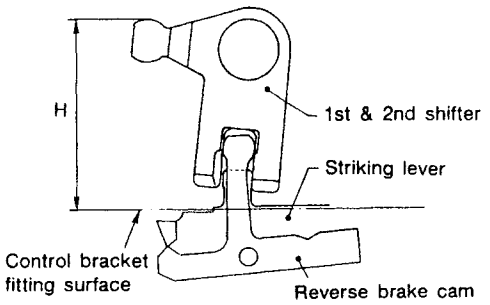

SMT735B

Maximum height "H" between the control bracket fitting surface and 1-2 shifter mm (in)	67.16 - 67.64 (2.6441 - 2.6330)

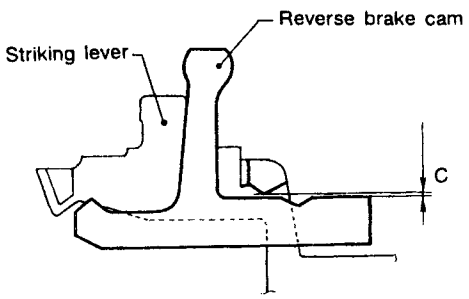

SMT736B

Clearance "C" between reverse brake cam and striking lever mm (in)	0.05 - 0.125 (0.0020 - 0.0049)

AVAILABLE SHIMS — DIFFERENTIAL SIDE BEARING PRELOAD AND ADJUSTING SHIM

Bearing preload (Reused bearing)

Unit: mm (in)

Differential side bearing	0.25 - 0.30 (0.0098 - 0.0118)

Turning torque (New bearing)

Unit: N·m (kg-cm, in-lb)

Final drive	2.9 - 6.9 (30 - 70, 26 - 61)

Differential side bearing adjusting shims

Thickness mm (in)	Part number
0.44 (0.0173)	38454-M8000
0.48 (0.0189)	38454-M8001
0.56 (0.0220)	38454-M8003
0.60 (0.0236)	38454-M8004
0.64 (0.0252)	38454-M8005
0.68 (0.0268)	38454-M8006
0.72 (0.0283)	38454-M8007
0.76 (0.0299)	38454-M8008
0.80 (0.0315)	38454-M8009
0.84 (0.0331)	38454-M8010
0.88 (0.0346)	38454-M8011

<COMBINED EDITION> Simple PDF Merge and Split Unregistered Version - http://www.simpopdf.com

NISSAN

ALMERA

MODEL N15 SERIES

QUICK REFERENCE INDEX

GENERAL INFORMATION	GI
MAINTENANCE	MA
ENGINE MECHANICAL	EM
ENGINE LUBRICATION & COOLING SYSTEMS	LC
ENGINE CONTROL SYSTEM	EC
ACCELERATOR CONTROL, FUEL & EXHAUST SYSTEMS	FE
CLUTCH	CL
MANUAL TRANSAXLE	MT
AUTOMATIC TRANSAXLE	AT
FRONT AXLE & FRONT SUSPENSION	FA
REAR AXLE & REAR SUSPENSION	RA
BRAKE SYSTEM	BR
STEERING SYSTEM	ST
RESTRAINT SYSTEM	RS
BODY & TRIM	BT
HEATER & AIR CONDITIONER	HA
ELECTRICAL SYSTEM	EL
ALPHABETICAL INDEX	IDX

Edition: July 1995
Printing: July 1995 (01)
Publication No. SM5E-0N15E0

NISSAN EUROPE N.V.

© 1995 NISSAN EUROPE N.V. Printed in THE NETHERLANDS
Not to be reproduced in whole or in part without the prior written permission of Nissan Europe N.V., Amsterdam, The Netherlands.

Simpo PDF Merge and Split Unregistered Version - http://www.simpopdf.com

FOREWORD

This manual contains maintenance and repair procedures for NISSAN model N15 series.

In order to assure your safety and the efficient functioning of the vehicle, this manual should be read thoroughly. It is especially important that the PRECAUTIONS in the GI section be completely understood before starting any repair task.

All information in this manual is based on the latest product information at the time of publication. The right is reserved to make changes in specifications and methods at any time without notice.

IMPORTANT SAFETY NOTICE

The proper performance of service is essential for both the safety of the technician and the efficient functioning of the vehicle.
The service methods in this Service Manual are described in such a manner that the service may be performed safely and accurately.
Service varies with the procedures used, the skills of the technician and the tools and parts available. Accordingly, anyone using service procedures, tools or parts which are not specifically recommended by NISSAN must first be completely satisfied that neither personal safety nor the vehicle's safety will be jeopardized by the service method selected.

NISSAN MOTOR CO., LTD.
Overseas Service Department
Tokyo, Japan

Simpo PDF Merge and Split Unregistered Version - http://www.simpopdf.com

REAR AXLE & REAR SUSPENSION

SECTION **RA**

CONTENTS

PRECAUTIONS AND PREPARATION 2
- Precautions 2
- Special Service Tools 2
- Commercial Service Tools 2

REAR SUSPENSION SYSTEM 3

ON-VEHICLE SERVICE 4
- Rear Axle and Rear Suspension Parts 4
- Rear Wheel Bearing 4
- Rear Wheel Alignment 5

REAR AXLE 6
- Wheel Hub 6

REAR SUSPENSION 8
- Removal and Installation 9
- Coil Spring and Shock Absorber 9
- Torsion Beam, Lateral Link and Control Rod 11

SERVICE DATA AND SPECIFICATIONS (SDS) 12
- General Specifications 12
- Inspection and Adjustment 12

Simpo PDF Merge and Split Unregistered Version - http://www.simpopdf.com

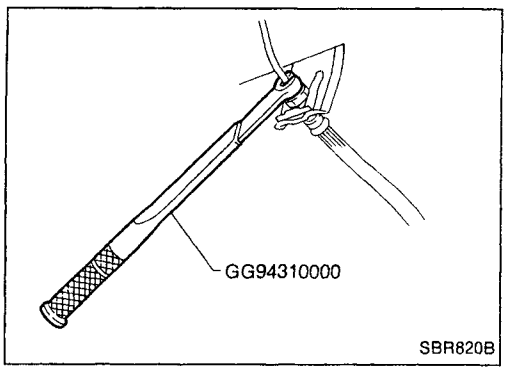

Precautions

- **When installing each rubber part, final tightening must be carried out under unladen condition* with tires on ground.**
  ***: Fuel, radiator coolant and engine oil full. Spare tire, jack, hand tools and mats in designated positions.**
- **Use flare nut wrench when removing or installing brake tubes.**
- **After installing removed suspension parts, check wheel alignment.**
- **Do not jack up at the trailing arm and lateral link.**
- **Always torque brake lines when installing.**

Special Service Tools

Tool number Tool name	Description	
GG94310000 Flare nut torque wrench	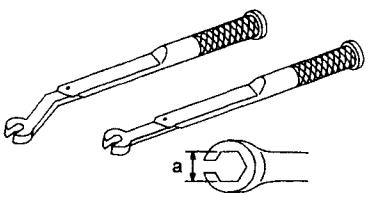 NT406	Removing and installing brake piping **a: 10 mm (0.39 in)**
HT71780000 Spring compressor	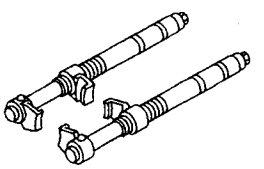 NT144	Removing and installing coil spring
ST35652000 Shock absorber attachment	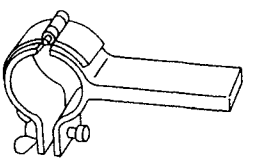 NT145	Fixing strut assembly

Commercial Service Tools

Tool name	Description	
Equivalent to GG94310000 ① Flare nut crows foot ② Torque wrench	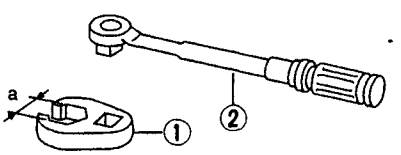 NT360	Removing and installing brake piping **a: 10 mm (0.39 in)**

Simpo PDF Merge and Split Unregistered Version - http://www.simpopdf.com

SEC. 431

When installing each rubber part, final tightening must be carried out under unladen condition* with tires on ground.

*** Fuel, radiator coolant and engine oil full. Spare tire, jack, hand tools and mats in designated positions.**

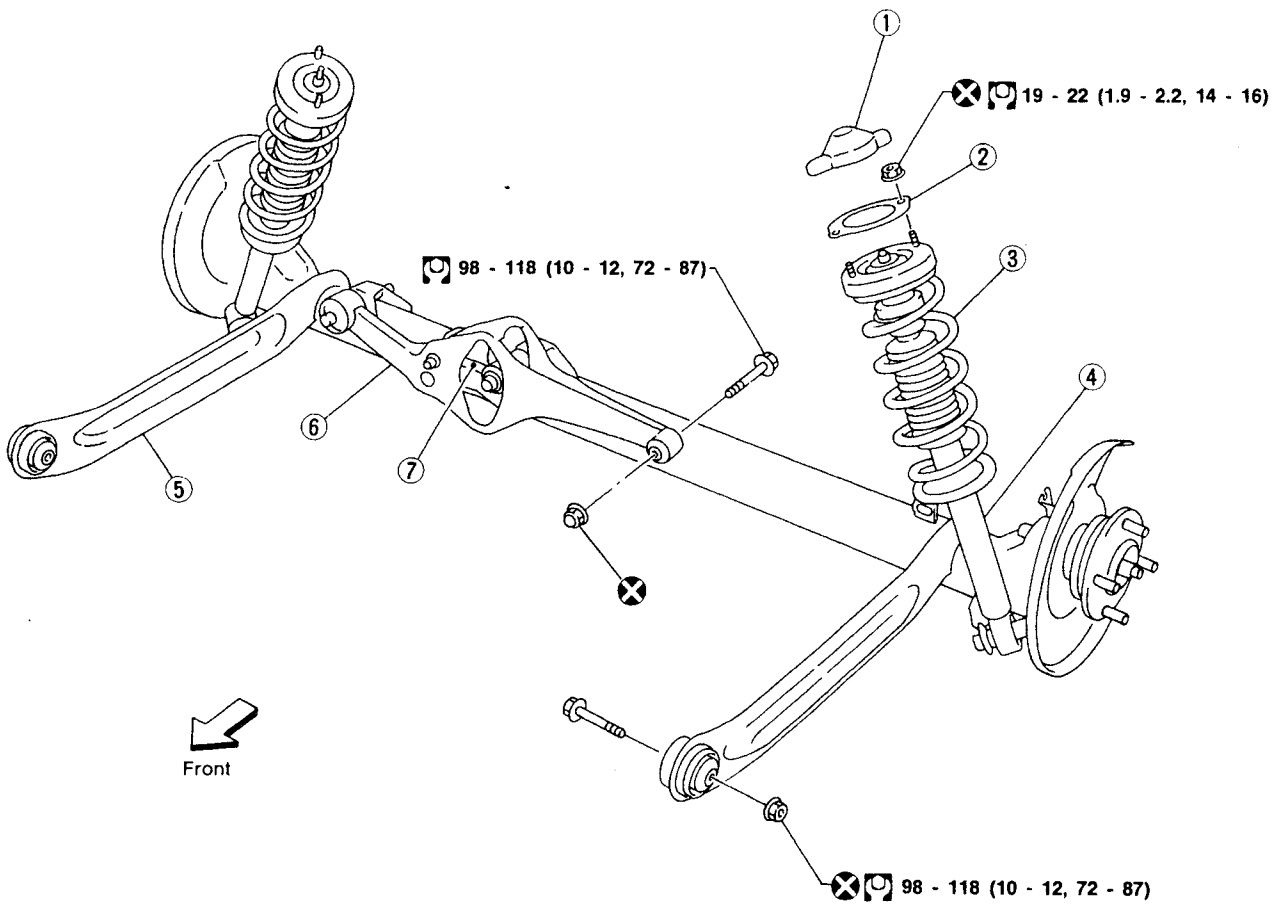

: N•m (kg-m, ft-lb)

① Shock absorber cap
② Shock absorber mounting seal
③ Coil spring
④ Shock absorber
⑤ Torsion beam
⑥ Lateral link
⑦ Control rod

RA

Simpo PDF Merge and Split Unregistered Version - http://www.simpopdf.com

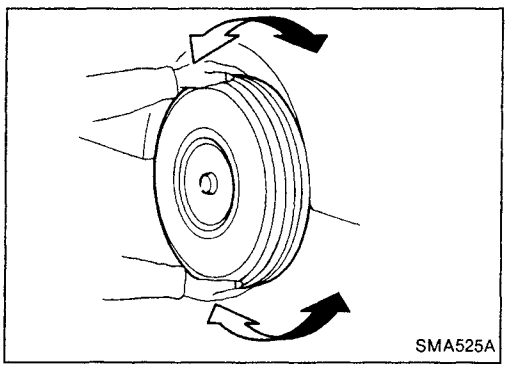
SMA525A

Rear Axle and Rear Suspension Parts

Check axle and suspension parts for excessive play, wear or damage.

- Shake each rear wheel to check for excessive play.

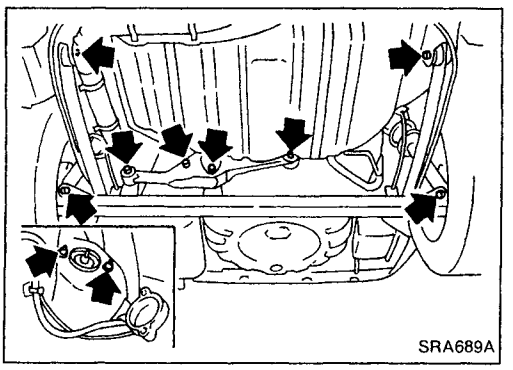
SRA689A

- Retighten all nuts and bolts to the specified torque.
  Tightening torque:
  Refer to REAR SUSPENSION (RA-8).

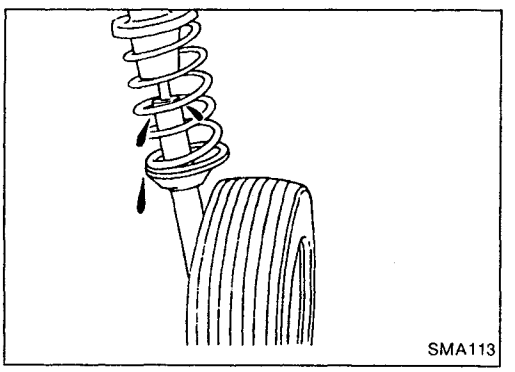
SMA113

- Check shock absorber for oil leakage or other damage.

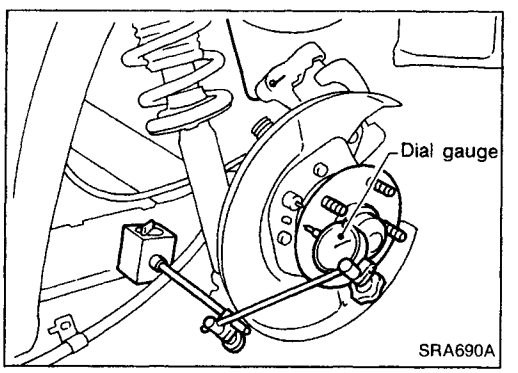

SRA690A

Rear Wheel Bearing

- Check axial end play.
  Axial end play:
  0.05 mm (0.0020 in) or less
- Check that wheel hub bearings operate smoothly.
- Check tightening torque of wheel bearing lock nut.
  : 186 - 255 N·m (19 - 26 kg-m, 137 - 188 ft-lb)
- Replace wheel bearing assembly if there is axial end play or wheel bearing does not turn smoothly. Refer to REAR AXLE — Wheel Hub (RA-6).

Simpo PDF Merge and Split Unregistered Version - http://www.simpopdf.com

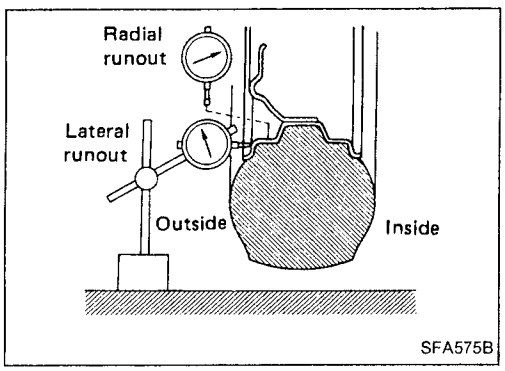

Rear Wheel Alignment

PRELIMINARY INSPECTION

Make following checks. Adjust, repair or replace if necessary.

- Check tires for wear and for improper inflation.
- Check rear wheel bearings for excessive play.
- Check wheel runout.
  Wheel runout: Refer to SDS in FA section.
- Check that rear shock absorber works properly.
- Check rear axle and rear suspension parts for excessive play.
- Check vehicle posture (Unladen*).
  *: Fuel, radiator and engine oil full. Spare tire, jack, hand tools and mats in designated positions.

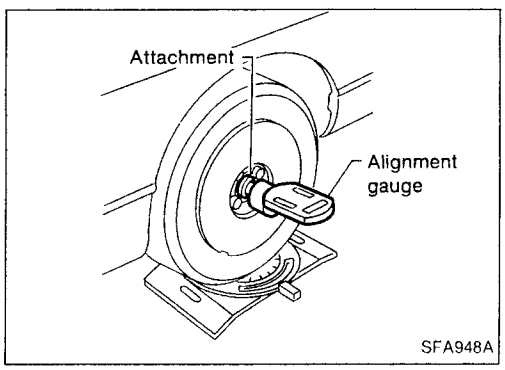

CAMBER

Camber is preset at factory and cannot be adjusted.

Camber:

Refer to SDS (RA-12).

- If the camber is not within specification, inspect and replace any damaged or worn rear suspension parts.

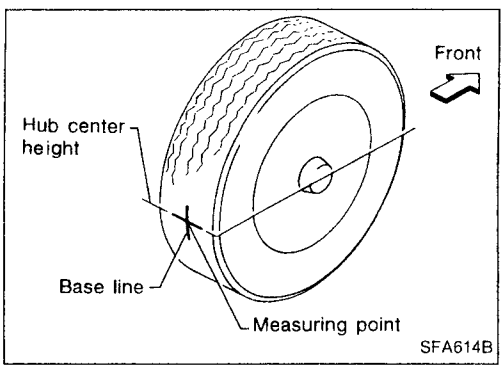

TOE-IN

Toe-in is preset at factory and cannot be adjusted.
Measure toe-in using following procedure. If out of specification, inspect and replace any damaged or worn rear suspension parts.

WARNING:

- **Perform following procedure always on a flat surface.**
- **Make sure that no person is in front of the vehicle before pushing it.**

1. Bounce rear of vehicle up and down to stabilize the posture.
2. Push the vehicle straight ahead about 5 m (16 ft).
3. Put a mark on base line of the tread (rear side) of both tires at the same height of hub center. This mark is a measuring point.
4. Measure distance "A" (rear side).
5. Push the vehicle slowly ahead to rotate the wheels 180 degrees (1/2 turn).

If the wheels have rotated more than 180 degrees (1/2 turn), try the above procedure again from the beginning. Never push vehicle backward.

6. Measure distance "B" (front side).

Total toe-in:

Refer to SDS, RA-12.

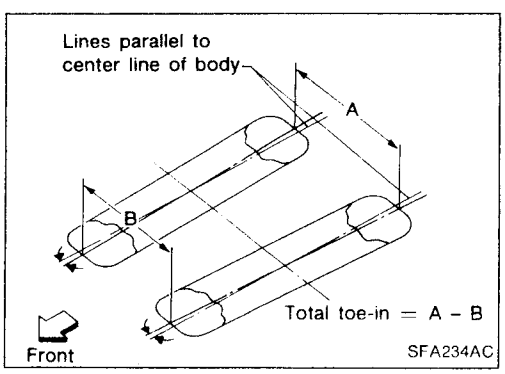

RA

Simpo PDF Merge and Split Unregistered Version - http://www.simpopdf.com

Wheel Hub

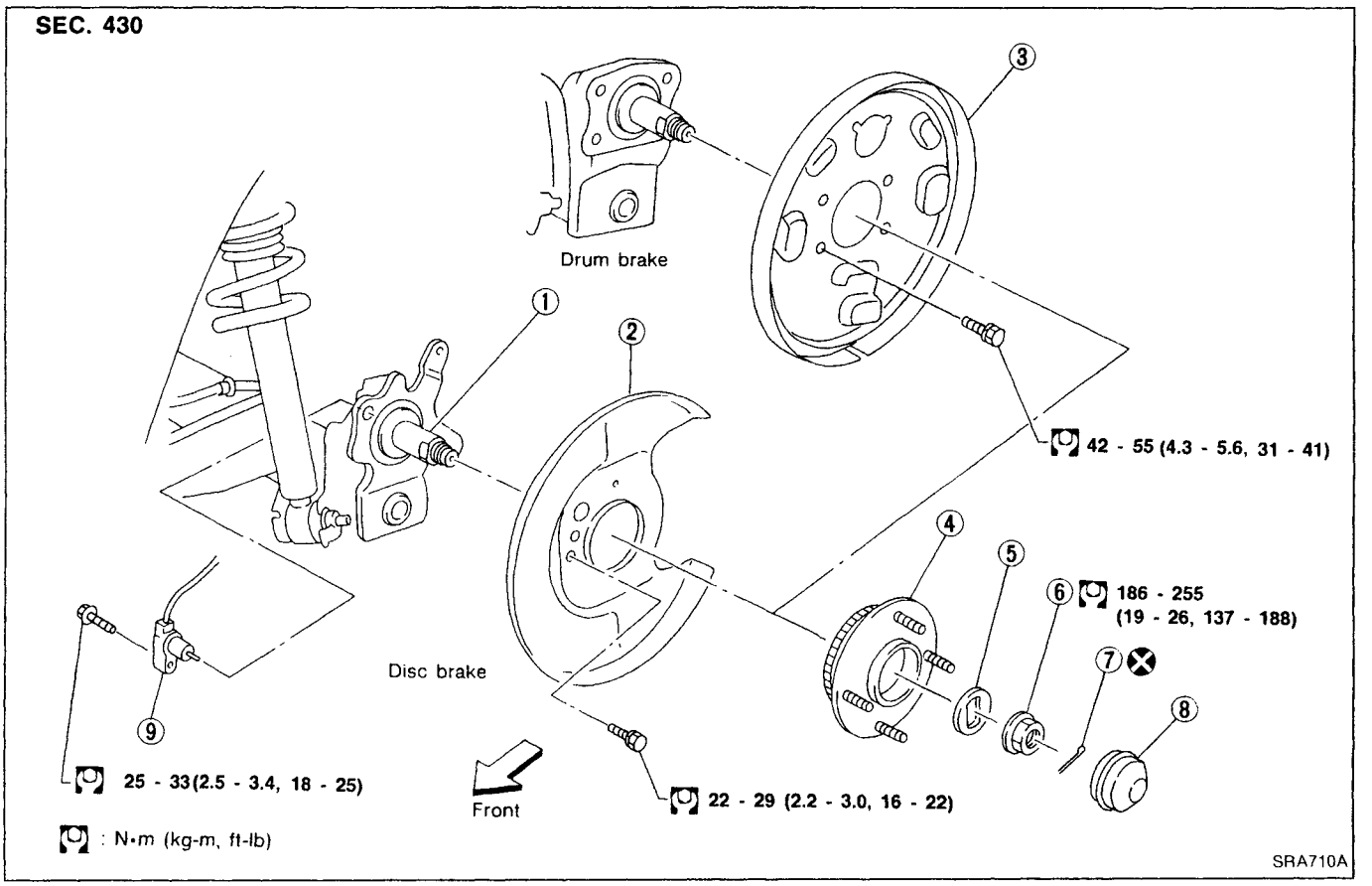

① Spindle
② Baffle plate
③ Back plate
④ Wheel hub bearing
⑤ Washer
⑥ Wheel bearing lock nut
⑦ Cotter pin
⑧ Hub cap
⑨ ABS sensor

REMOVAL

CAUTION:

- **Before removing the rear wheel hub assembly, disconnect the ABS wheel sensor from the assembly. Then move it away from the hub assembly. Failure to do so may result in damage to the sensor wires and the sensor becoming inoperative.**
- **Wheel hub bearing does not require maintenance. If any of the following symptoms are noted, replace wheel hub bearing assembly.**
- Growling noise is emitted from wheel hub bearing during operation.
- Wheel hub bearing drags or turns roughly. This occurs when turning hub by hand after bearing lock nut is tightened to specified torque.

Simpo PDF Merge and Split Unregistered Version - http://www.simpopdf.com

Wheel Hub (Cont'd)

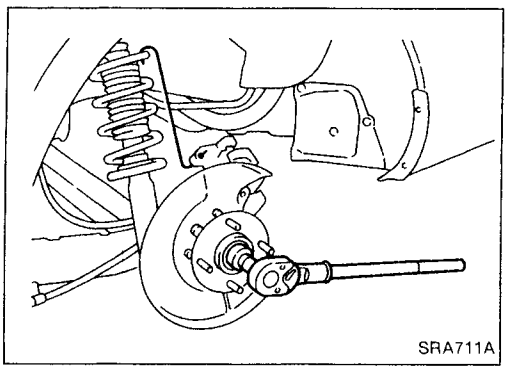
SRA711A

1. Remove brake caliper assembly.
2. Remove wheel bearing lock nut.
3. Remove brake rotor (models with disc brake) or brake drum (models with drum brakes).
4. Remove wheel hub bearing from spindle.

Brake hose does not need to be disconnected from brake caliper.

Suspend caliper assembly with wire so as not to stretch brake hose.

Be careful not to depress brake pedal, or piston will pop out.

Make sure brake hose is not twisted.

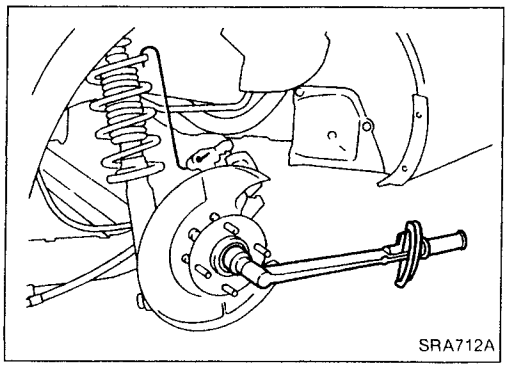
SRA712A

INSTALLATION

- Install wheel hub bearing.
- Tighten wheel bearing lock nut.
  Before tightening, apply oil to threaded portion of rear spindle and both sides of plain washer.
  : 186 - 255 N·m (19 - 26 kg-m, 137 - 188 ft-lb)
- Check that wheel bearings operate smoothly.

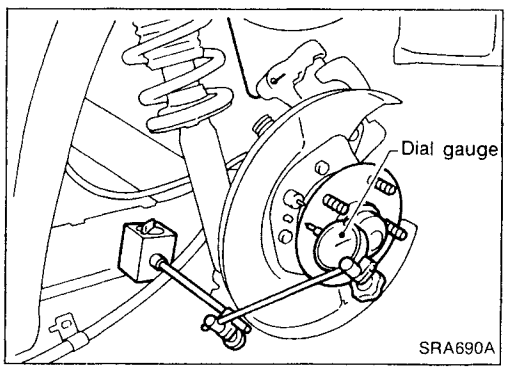

SRA690A

- Check wheel hub bearing axial end play.
  Axial end play:
  0.05 mm (0.0020 in) or less

RA

Simpo PDF Merge and Split Unregistered Version - http://www.simpopdf.com

SEC. 431

When installing each rubber part, final tightening must be carried out under unladen condition* with tires on ground.

* Fuel, radiator coolant and engine oil full. Spare tire, jack, hand tools and mats in designated positions.

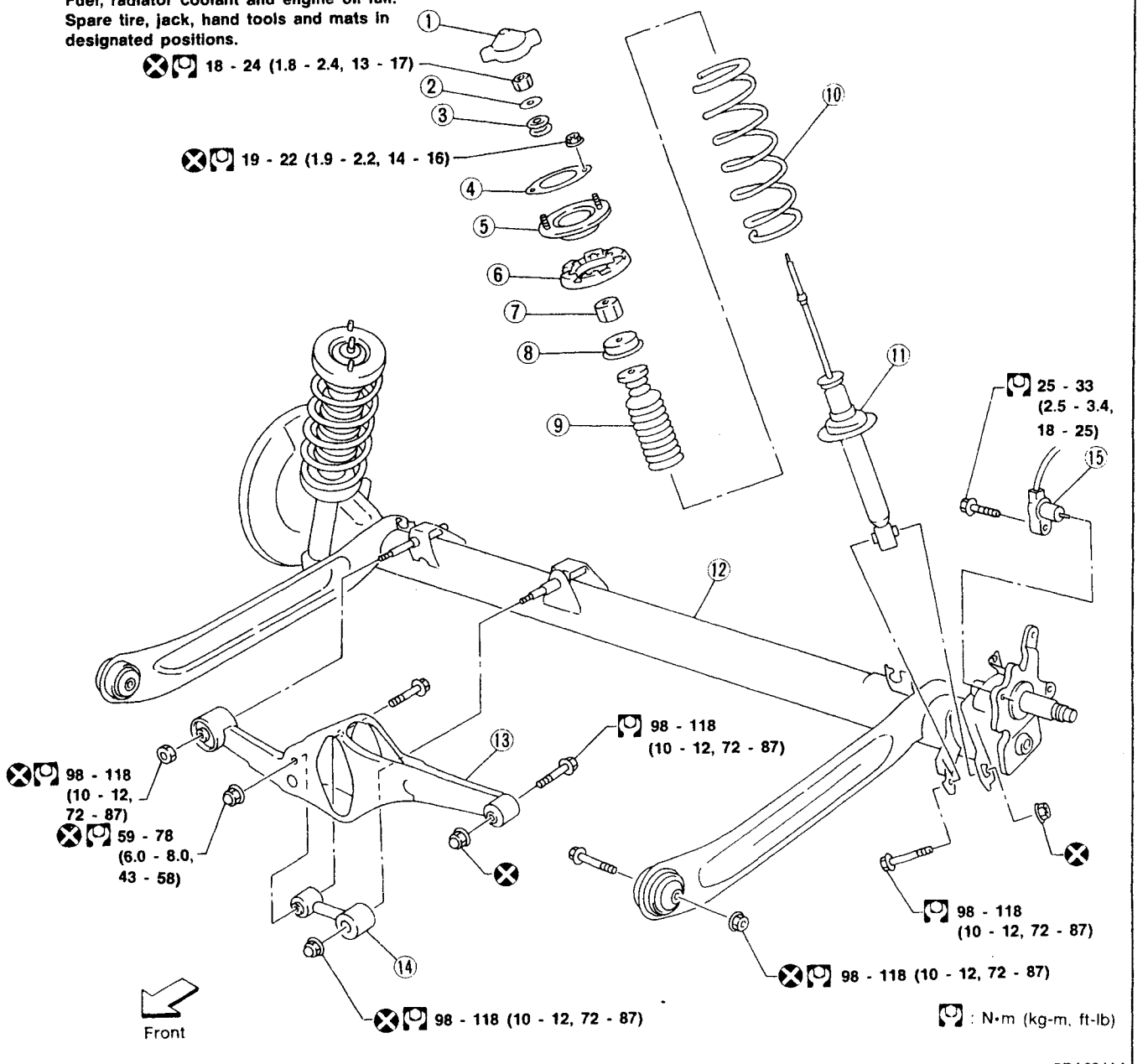

① Shock absorber cap
② Washer
③ Bushing
④ Shock absorber mounting seal
⑤ Shock absorber mounting bracket
⑥ Upper spring seat rubber
⑦ Bushing
⑧ Bound bumper cover
⑨ Bound bumper
⑩ Coil spring
⑪ Shock absorber
⑫ Torsion beam
⑬ Lateral link
⑭ Control rod
⑮ ABS sensor

Simpo PDF Merge and Split Unregistered Version - http://www.simpopdf.com

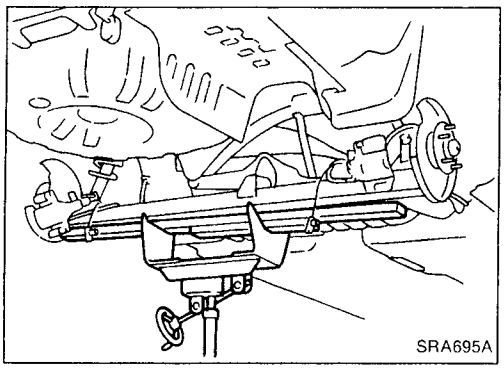
SRA695A

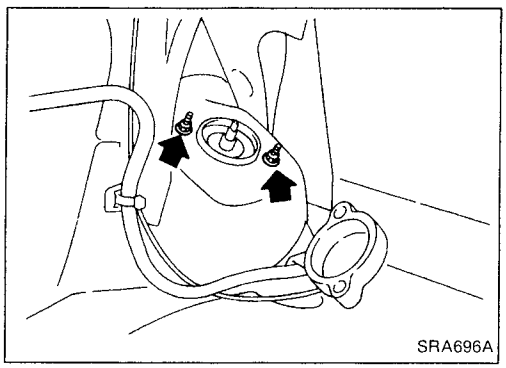
SRA696A

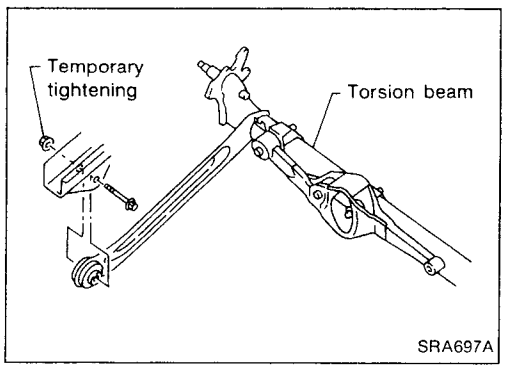

SRA697A

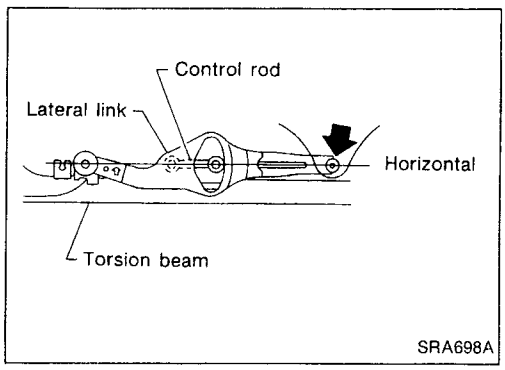

SRA698A

Removal and Installation

CAUTION:

- **Before removing the rear suspension assembly, disconnect the ABS wheel sensor from the assembly. Failure to do so may result in damage to the sensor wires and the sensor becoming inoperative.**
- Remove suspension assembly.

1. Disconnect brake hydraulic lines and parking brake cable at toggle lever. (Models with drum brakes.)

- Drain brake fluid before disconnecting brake lines.

2. Disconnect parking brake cable from caliper and remove brake caliper and rotor. (Models with disc brakes.)

Suspend caliper assembly with wire so as not to stretch brake hose.
Be careful not to depress brake pedal, or piston will pop out.
Make sure brake hose is not twisted.

3. Using a transmission jack, raise torsion beam a little, and remove nuts and bolts from the trailing arm, shock absorber assembly (lower side) and lateral link.
4. Lower transmission jack, and remove suspension.
5. Remove luggage compartment trim. Refer to BT section.
6. Remove strut securing nuts (upper side). Then pull out strut assembly.

- Install suspension assembly.

CAUTION:
Refill with new brake fluid "DOT 3".
Never reuse drained brake fluid.

1. Attach torsion beam, at trailing arm and lateral link, to vehicle. Do not tighten bolts at this time.
2. Using a transmission jack, place lateral link and control rod horizontally against torsion beam. Tighten lateral link on vehicle.
3. Attach shock absorber assembly to vehicle. Then tighten the lower side of shock absorber assembly.
4. Lower torsion beam to fully extended position. Remove transmission jack and tighten torsion beam, at trailing arm, to specified torque. Refer to RA-8.
5. Install brake hydraulic lines and tighten flare nuts.
   : 15 - 18 N·m (1.5 - 1.8 kg-m, 11 - 13 ft-lb)

Coil Spring and Shock Absorber

REMOVAL

Remove shock absorber upper and lower fixing nuts.
Do not remove piston rod lock nut on vehicle.

RA

Simpo PDF Merge and Split Unregistered Version - http://www.simpopdf.com

Coil Spring and Shock Absorber (Cont'd)

DISASSEMBLY

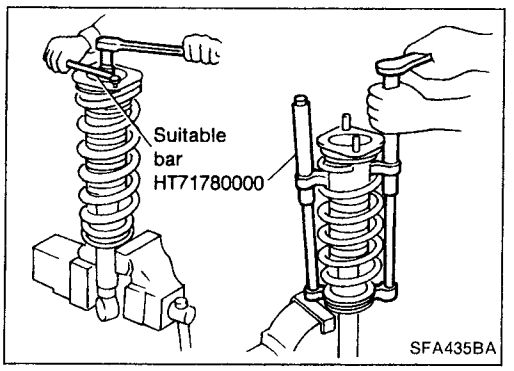

1. Set shock absorber in vise with attachment, then **loosen** piston rod lock nut.

Do not remove piston rod lock nut at this time.

2. Compress spring with Tool so that the shock absorber upper spring seat can be turned by hand.

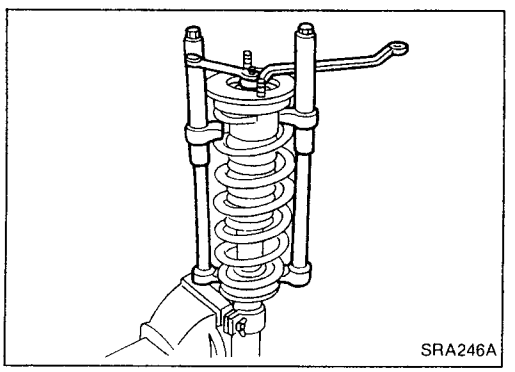

3. Remove piston rod lock nut.

INSPECTION

Shock absorber assembly

- Check for smooth operation through a full stroke, both compression and extension.
- Check for oil leakage on welded or gland packing portions.
- Check piston rod for cracks, deformation or other damage. Replace if necessary.

Upper rubber seat and bushing

Check rubber parts for deterioration or cracks.
Replace if necessary.

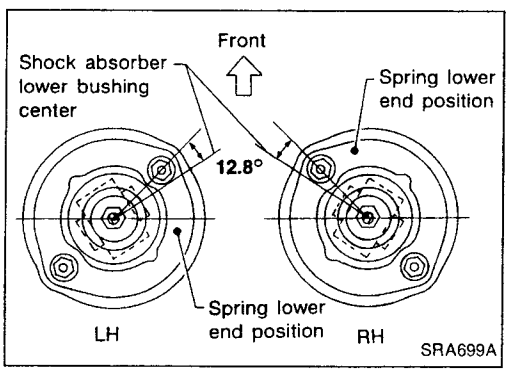

Coil spring

Check for cracks, deformation or other damage. Replace if necessary.

ASSEMBLY

- Locate upper spring seat as shown.

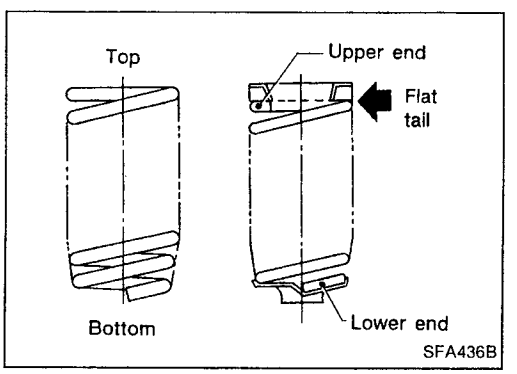

- When installing coil spring, be careful not to reverse top and bottom direction. (Top end is flat.)
- When installing coil spring on shock absorber, it must be positioned as shown in figure at left.

Simpo PDF Merge and Split Unregistered Version - http://www.simpopdf.com

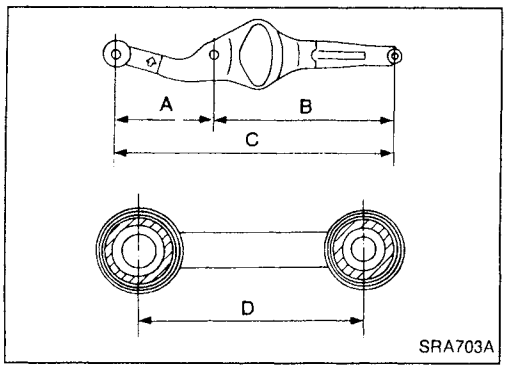

Torsion Beam, Lateral Link and Control Rod

DISASSEMBLY

- Remove torsion beam assembly. Refer to Removal and Installation in REAR SUSPENSION (RA-9).
- Remove lateral link and control rod from torsion beam.

INSPECTION

- Check for cracks, distortion or other damage. Replace if necessary.

  Standard length:

  A 207 - 208 mm (8.15 - 8.19 in)
  B 394 - 395 mm (15.51 - 15.55 in)
  C 601 - 603 mm (23.66 - 23.74 in)
  D 106 - 108 mm (4.17 - 4.25 in)

- Check all rubber parts for wear, cracks or deformation. Replace if necessary.

ASSEMBLY

1. Temporarily assemble lateral link and control rod.
- When installing the control rod, connect the bush with the smaller inner diameter to the lateral link.

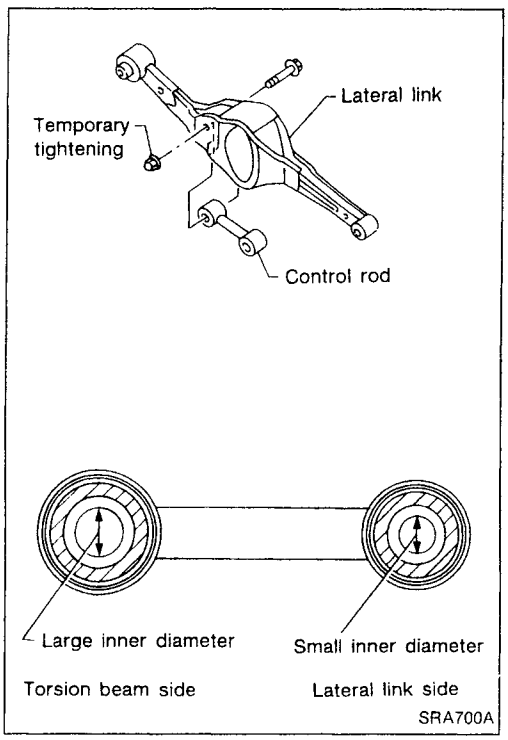

2. Temporarily install lateral link and control rod on torsion beam.
- When installing, place lateral link with the arrow topside.

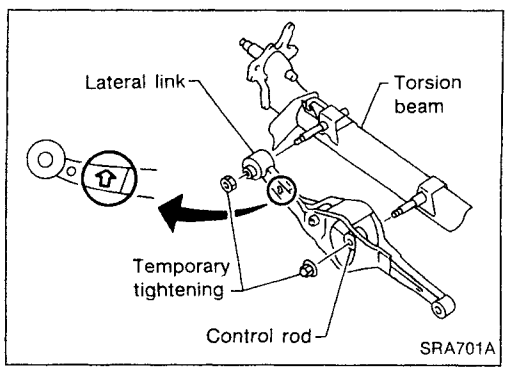

3. Place lateral link and control rod horizontally against torsion beam, and tighten to the specified torque.
4. Install torsion beam assembly. Refer to Removal and Installation in REAR SUSPENSION (RA-9).

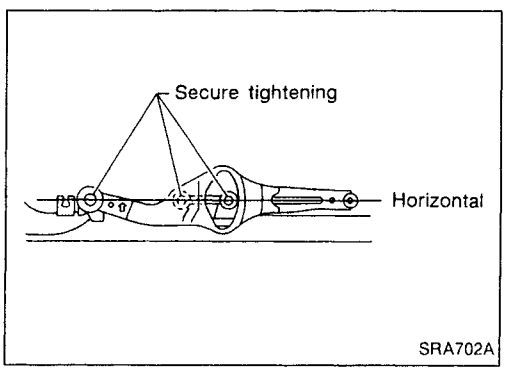

RA

Simpo PDF Merge and Split Unregistered Version - http://www.simpopdf.com

General Specifications

Suspension type	Multi-link beam suspension
Shock absorber type	Double-acting hydraulic
Stabilizer	Standard equipment

Inspection and Adjustment

WHEEL ALIGNMENT (Unladen*)

Camber	Minimum	−1°45′ (−1.75°)
Degree minute (Decimal degree)	Nominal	−1°00′ (−1.00°)
	Maximum	−0°15′ (−0.25°)
Total toe-in	Minimum	−3 (−0.12)
Distance (A–B) mm (in)	Nominal	1 (0.04)
	Maximum	5 (0.20)
Angle (left plus right)	Minimum	−16′ (−0.27°)
Degree minute (Decimal degree)	Nominal	5′ (0.08°)
	Maximum	26′ (0.43°)

*: Fuel, radiator coolant and engine oil full. Spare tire, jack, hand tools and mats in designated positions.

WHEEL BEARING

Wheel bearing axial end play mm (in)	0.05 (0.0020) or less
Wheel bearing lock nut tightening torque N·m (kg-m, ft-lb)	186 - 255 (19 - 26, 137 - 188)

Simpo PDF Merge and Split Unregistered Version - http://www.simpopdf.com

RESTRAINT SYSTEM

SECTION RS

CONTENTS

PRECAUTION 2
Supplemental Restraint System (SRS) "AIR BAG" (Dual Air Bag System) 2
Supplemental Restraint System (SRS) "AIR BAG" (Single Air Bag System) 2
SEAT BELTS 3
Front Seat Belt 3
Rear Seat Belt 5
SUPPLEMENTAL RESTRAINT SYSTEM (SRS) 8
Precautions for SRS "Air Bag" and "Seat Belt Pre-tensioner" Service 8
Special Service Tools 8
Description 9
SRS Component Parts Location 10
Maintenance Items 11
Removal and Installation — Diagnosis Sensor Unit 12
Removal and Installation — Seat Belt Pre-tensioner (Mechanical Type) 13
Removal and Installation — Air Bag Module and Spiral Cable (Dual Air Bag System) 14
Removal and Installation — Air Bag Module and Spiral Cable (Single Air Bag System) 14
Removal — Air Bag Module and Spiral Cable 15
Removal — Front Passenger Air Bag Module (Dual Air Bag System) 16
Installation — Air Bag Module and Spiral Cable 17
Installation — Front Passenger Air Bag Module (Dual Air Bag System) 18
Disposal of Air Bag Module and Seat Belt Pre-tensioner 19
TROUBLE DIAGNOSES — Supplemental Restraint System (SRS) 25
How to Perform Trouble Diagnoses for Quick and Accurate Repair 25
TROUBLE DIAGNOSES — Supplemental Restraint System (SRS) — Dual Air Bag System 28
Schematic 28
Wiring Diagram — SRS — 29
Self-diagnosis 32
Trouble Diagnoses for Air Bag Warning Lamp 38
COLLISION DIAGNOSIS — Dual Air Bag System 40
TROUBLE DIAGNOSES — Supplemental Restraint System (SRS) — Single Air Bag System 41
Schematic 41
Wiring Diagram — SRS — 42
Self-diagnosis 43
COLLISION DIAGNOSIS — Single Air Bag System 45
COLLISION DIAGNOSIS — Seat Belt Pre-tensioner 46

RS

When you read wiring diagrams:
- **Read GI section, "HOW TO READ WIRING DIAGRAMS".**
- **See EL section, "POWER SUPPLY ROUTING" for power distribution circuit.**

When you perform trouble diagnoses, read GI section, "HOW TO FOLLOW FLOW CHART IN TROUBLE DIAGNOSES" and "HOW TO PERFORM EFFICIENT DIAGNOSIS FOR AN ELECTRICAL INCIDENT".

Simpo PDF Merge and Split Unregistered Version - http://www.simpopdf.com

Supplemental Restraint System (SRS) "AIR BAG" (Dual Air Bag System)

The Supplemental Restraint System "Air Bag", used along with a seat belt, helps to reduce the risk or severity of injury to the driver and front passenger in a frontal collision. The Supplemental Restraint System consists of air bag modules (located in the center of the steering wheel and on the instrument panel on the passenger side), a diagnosis sensor unit, warning lamp, wiring harness and spiral cable.

WARNING:

- **To avoid rendering the SRS inoperative, which could increase the risk of personal injury or death in the event of a collision which would result in air bag inflation, all maintenance must be performed by an authorized NISSAN dealer.**
- **Improper maintenance, including incorrect removal and installation of the SRS, can lead to personal injury caused by unintentional activation of the system.**
- **Do not use electrical test equipment on any circuit related to the SRS unless instructed to in this Service Manual. SRS wiring harnesses are covered with yellow insulation either just before the harness connectors or for the complete harness, for easy identification.**

Supplemental Restraint System (SRS) "AIR BAG" (Single Air Bag System)

The Supplemental Restraint System "Air Bag", used along with a seat belt, helps to reduce the risk or severity of injury to the driver in a frontal collision. The Supplemental Restraint System consists of an air bag module (located in the center of the steering wheel), a diagnosis sensor unit, warning lamp, wiring harness and spiral cable.

WARNING:

- **To avoid rendering the SRS inoperative, which could increase the risk of personal injury or death in the event of a collision which would result in air bag inflation, all maintenance must be performed by an authorized NISSAN dealer.**
- **Improper maintenance, including incorrect removal and installation of the SRS, can lead to personal injury caused by unintentional activation of the system.**
- **Do not use electrical test equipment on any circuit related to the SRS unless instructed to in this Service Manual.**

Simpo PDF Merge and Split Unregistered Version - https://www.simpopdf.com

CAUTION:

- **For vehicles equipped with seat belt pre-tensioner, refer to "Removal and Installation — Seat Belt Pre-tensioner (Mechanical Type)" when removing seat belt. Refer to RS-13 for details.**
- **Do not disassemble buckle or seat belt assembly.**
- **Replace anchor bolts if they are deformed or worn out.**
- **Never oil tongue and buckle.**
- **If any component of seat belt assembly is questionable, do not repair. Replace the whole seat belt assembly.**
- **If webbing is cut, frayed, or damaged, replace seat belt assembly.**
- **When replacing seat belt assembly, use a genuine seat belt assembly.**
- **After any collision, inspect all seat belt assemblies, including retractors and other attached hardwares (i.e., guide rail set).**

Front Seat Belt

4-DOOR SEDAN AND 5-DOOR HATCHBACK

CAUTION:

Before removing seat belt pre-tensioner assembly, be sure to lock safety lever to make seat belt pre-tensioner inoperative. Do not unlock safety lever before reinstalling seat belt pre-tensioner assembly.

① Remove front seat. Refer to "SEAT" in BT section for details.
② Remove floor anchor bolt.
③ Remove adjuster cover.
④ Remove shoulder anchor bolt.
⑤ Remove center pillar upper and lower garnishes. Refer to "INTERIOR TRIM" in BT section for details.
⑥ Remove second sash guide.
⑦ Remove the bolt securing seat belt pre-tensioner retractor, then remove seat belt and seat belt pre-tensioner retractor.
⑧ Remove the bolts securing seat belt adjuster, then remove seat belt adjuster.

SEC. 769•868

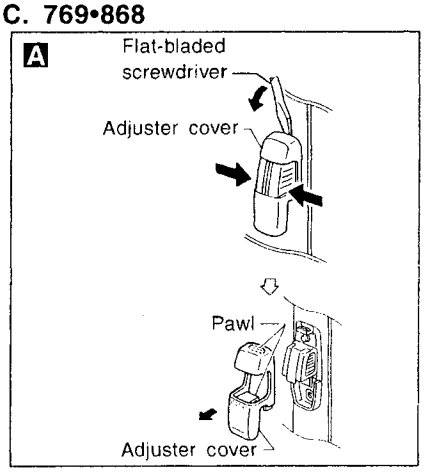

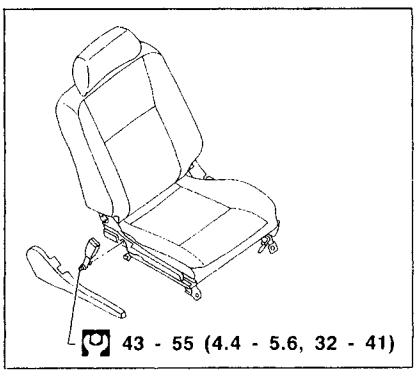

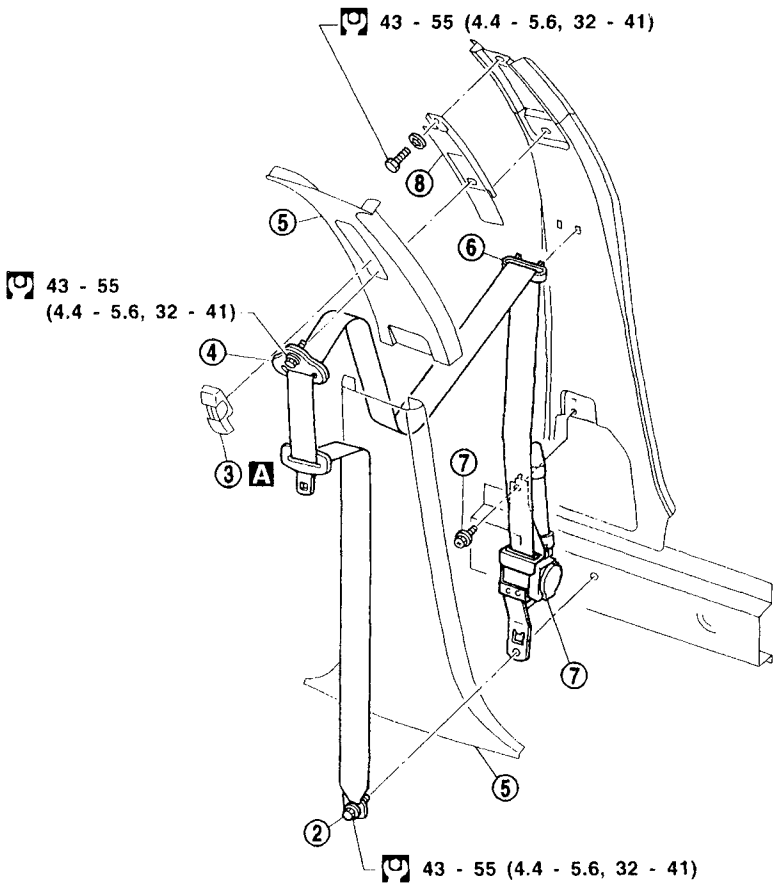

: N•m (kg-m, ft-lb)

MRS107A

RS

Simpo PDF Merge and Split Unregistered Version - http://www.simpopdf.com

Front Seat Belt (Cont'd)

3-DOOR HATCHBACK

CAUTION:

Before removing seat belt pre-tensioner assembly, be sure to lock safety lever to make seat belt pre-tensioner inoperative. Do not unlock safety lever before reinstalling seat belt pre-tensioner assembly.

① Remove front and rear seats. Refer to "SEAT" in BT section for details.
② Remove floor anchor bolts.
③ Remove shoulder cover.
④ Remove shoulder anchor bolt.
⑤ Remove rear side lower garnish. Refer to "INTERIOR TRIM" in BT section for details.
⑥ Remove the bolts securing second sash guide.
⑦ Remove the bolts securing seat belt pre-tensioner retractor, then remove seat belt and seat belt pre-tensioner retractor.

SEC. 769•868

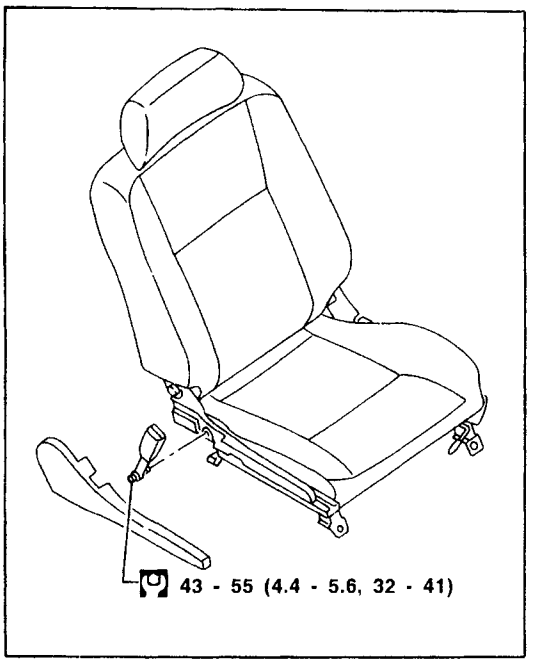

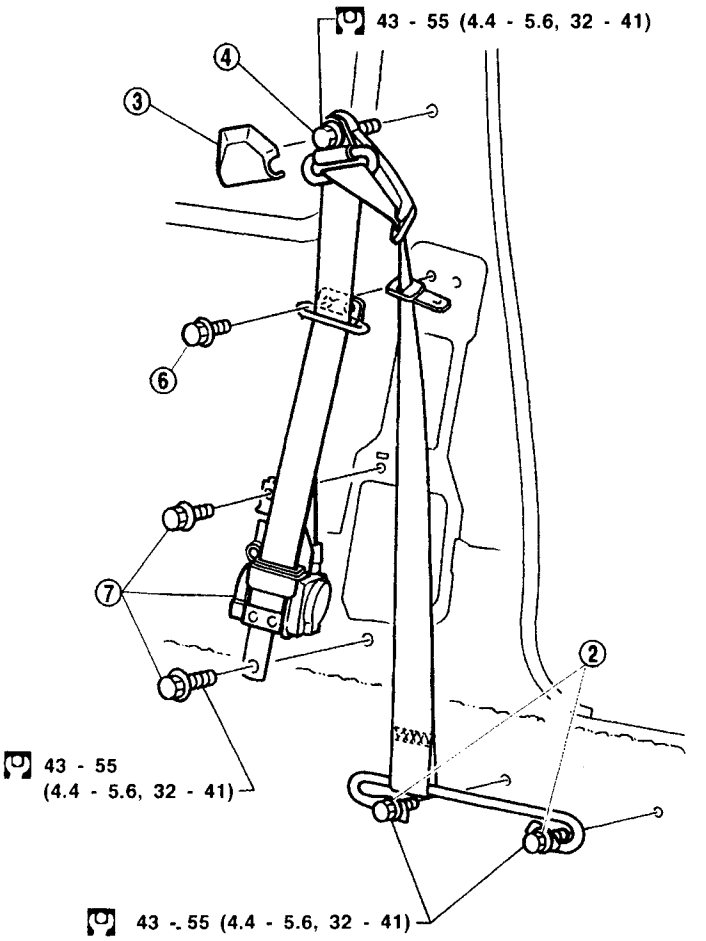

: N•m (kg-m, ft-lb)

MRS108A

Simpo PDF Merge and Split Unregistered Version - https://www.simpopdf.com

Rear Seat Belt

4-DOOR SEDAN

① Remove rear seat. Refer to "SEAT" in BT section for details.
② Remove rear pillar garnish and rear parcel shelf finisher. Refer to "INTERIOR TRIM" in BT section for details.
③ Remove trunk room trim. Refer to "INTERIOR TRIM" in BT section for details.
④ Remove each anchor bolt.
⑤ Remove the bolt securing rear seat belt retractor, then remove seat belt retractor.

SEC. 869

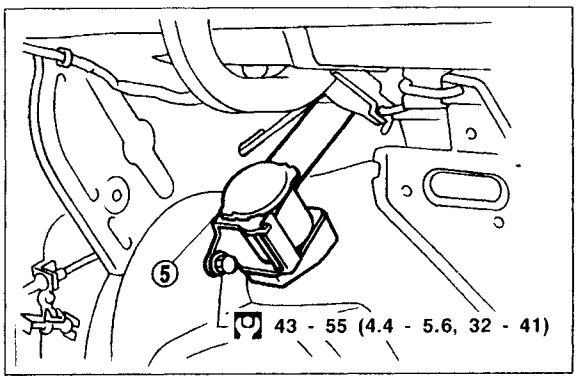

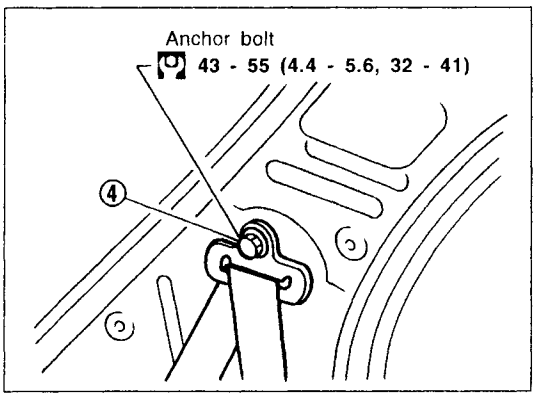

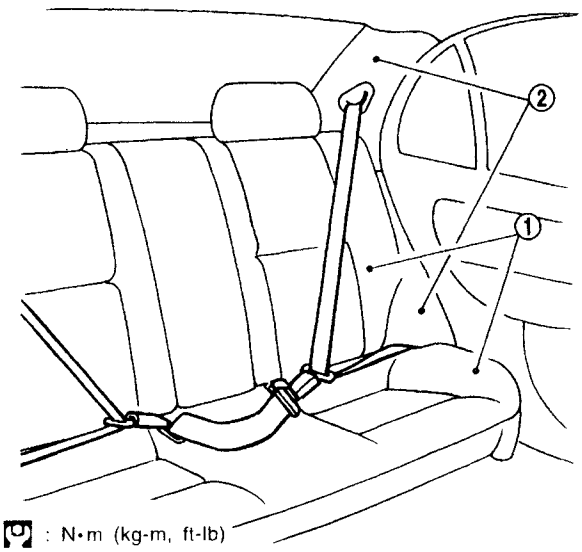

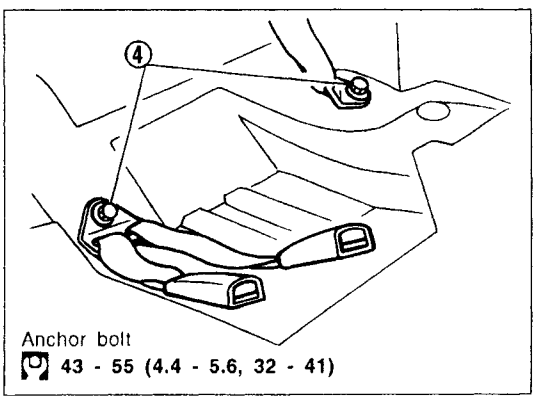

: N•m (kg-m, ft-lb)

MRS109A

RS

Simpo PDF Merge and Split Unregistered Version - https://www.simpopdf.com

Rear Seat Belt (Cont'd)

3-DOOR HATCHBACK

- Before removing seat belt, open back door and remove tonneau board.

① Remove rear seat. Refer to "SEAT" in BT section for details.
② Remove rear parcel shelf side escutcheon and luggage side lower finisher. Refer to "INTERIOR TRIM" in BT section for details.
③ Remove shoulder anchor cover.
④ Remove each anchor bolt.
⑤ Remove the bolt securing rear seat belt retractor, then remove seat belt retractor.

SEC. 869

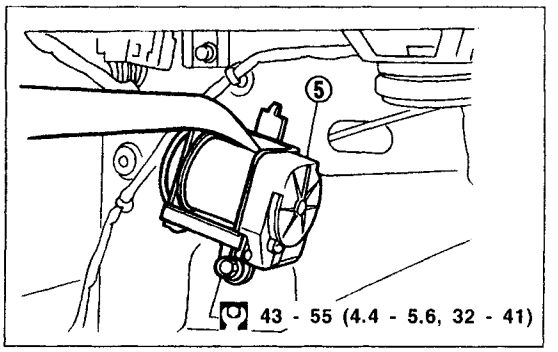

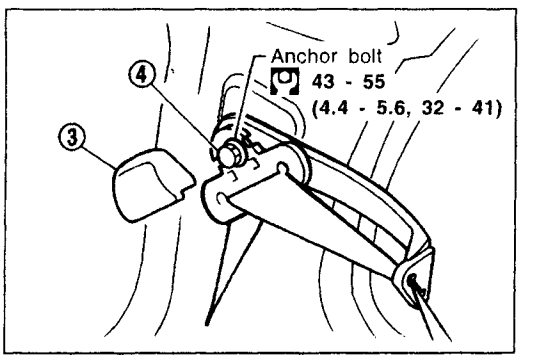

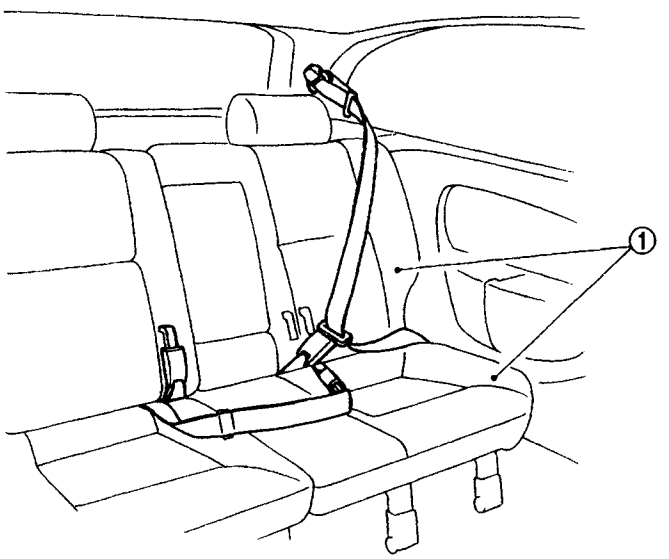

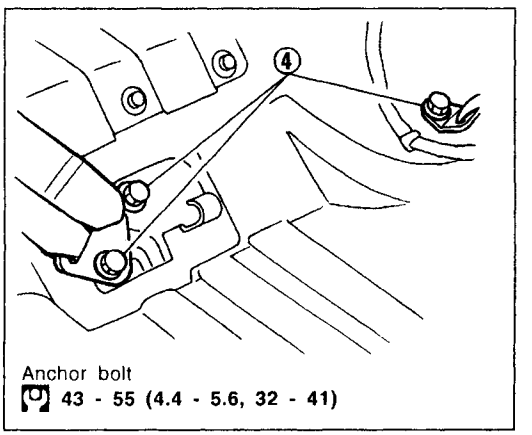

: N•m (kg-m, ft-lb)

MRS110A

Simpo PDF Merge and Split Unregistered Version - https://www.simpopdf.com

Rear Seat Belt (Cont'd)

5-DOOR HATCHBACK

- Before removing seat belt, open back door and remove tonneau board.

① Remove rear seat. Refer to "SEAT" in BT section for details.
② Remove rear parcel shelf side finisher and luggage side lower finisher. Refer to "INTERIOR TRIM" in BT section for details.
③ Remove shoulder anchor cover.
④ Remove each anchor bolt.
⑤ Remove the bolt securing rear seat belt retractor, then remove seat belt retractor.

SEC. 869

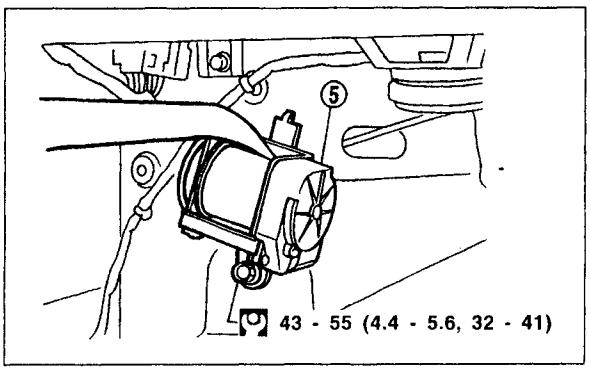

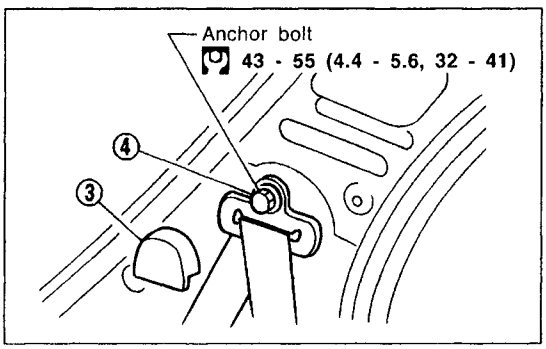

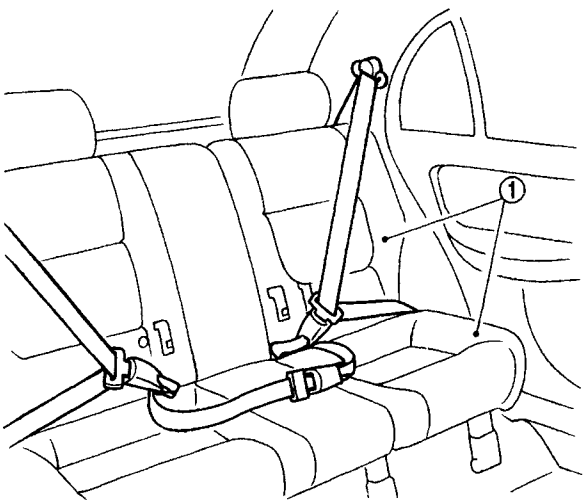

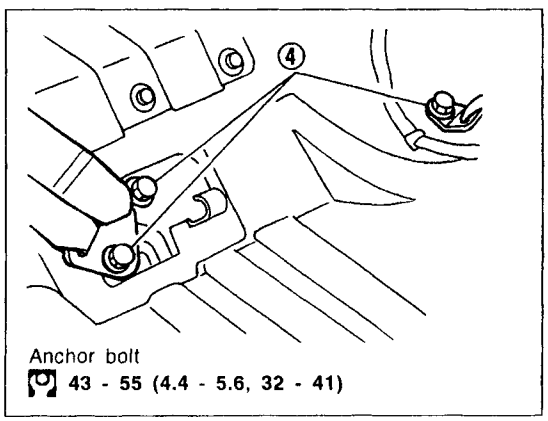

: N•m (kg-m, ft-lb)

MRS111A

RS

Simpo PDF Merge and Split Unregistered Version - http://www.simpopdf.com

Precautions for SRS "Air Bag" and "Seat Belt Pre-tensioner" Service

- Do not use a circuit tester to check SRS circuits.
- Before servicing the SRS, turn ignition switch "OFF", disconnect both battery cables and wait for at least 10 minutes.
  For approximately 10 minutes after the cables are removed, it is still possible for the air bag to deploy. Therefore, do not work on any SRS connectors or wires until at least 10 minutes have passed.
- For single air bag system, do not separate diagnosis sensor unit from steering wheel.
- For dual air bag system, diagnosis sensor unit must always be installed with their arrow marks "⇦" pointing towards the front of the vehicle for proper operation. Also check diagnosis sensor unit for cracks, deformities or rust before installation and replace as required.
- The spiral cable must be aligned with the neutral position since its rotations are limited. Do not attempt to turn steering wheel or column after removal of steering gear.
- Handle air bag module carefully. Always place it with the pad side facing upward.
- Do not use old bolts after removing any SRS parts; replace with new ones. Conduct self-diagnosis to check entire SRS for proper function.
- For dual air bag system, instrument panel assembly should be replaced after air bag inflates.

Special Service Tools

Tool number Tool name	Description	Application		
		Seat belt pre-tensioner*2	Dual Air Bag System	Single Air Bag System
KV991072S0 Air bag deployment kit KV99106400 Deployment tool	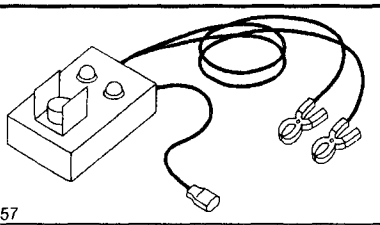 NT357 Disposing of air bag module	—	X	X
KV991065S0 Deployment tool adapters	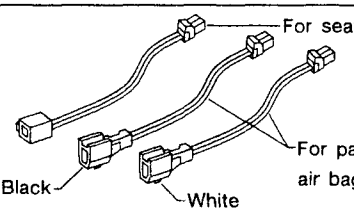 NT353	—	X	—
KV99105300 Passenger air bag bracket	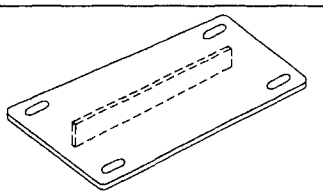 NT354 Anchor the passenger air bag module	—	X	—
HT61961000 and HT62152000 combined *1 Special torx bit	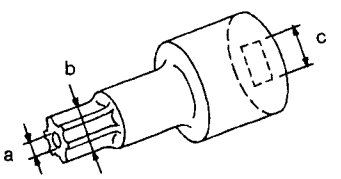 NT361 Use for special bolts [TAMPER RESISTANT TORX (Size T50)] **a: 3.5 (0.138) dia.** **b: 8.5 - 8.6 (0.335 - 0.339) dia.** **c: approx. 10 (0.39) sq.** Unit: mm (in)	—	X	X

*1: Special tool or commercial equivalent
*2: Tools are not applicable because of its mechanical type.

Simpo PDF Merge and Split Unregistered Version - http://www.simpopdf.com

Description

The air bag deploys if the diagnosis sensor unit activates while the ignition switch is in the "ON" or "START" position.

Single and dual air bag systems

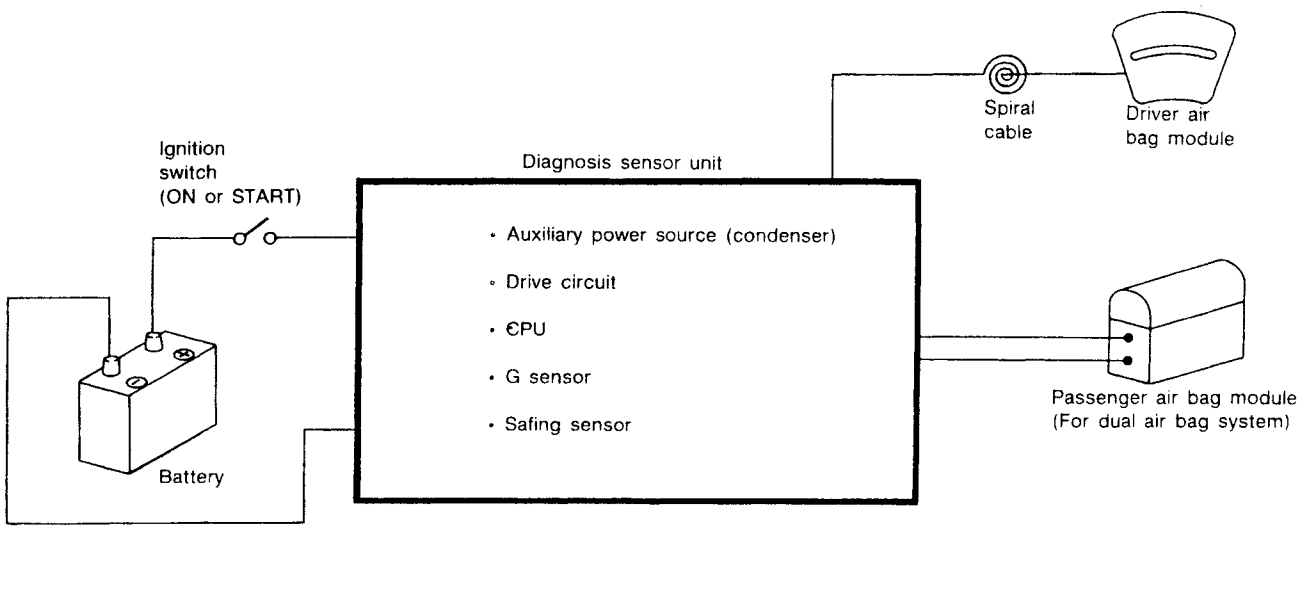

MRS069AB

Seat belt pre-tensioner

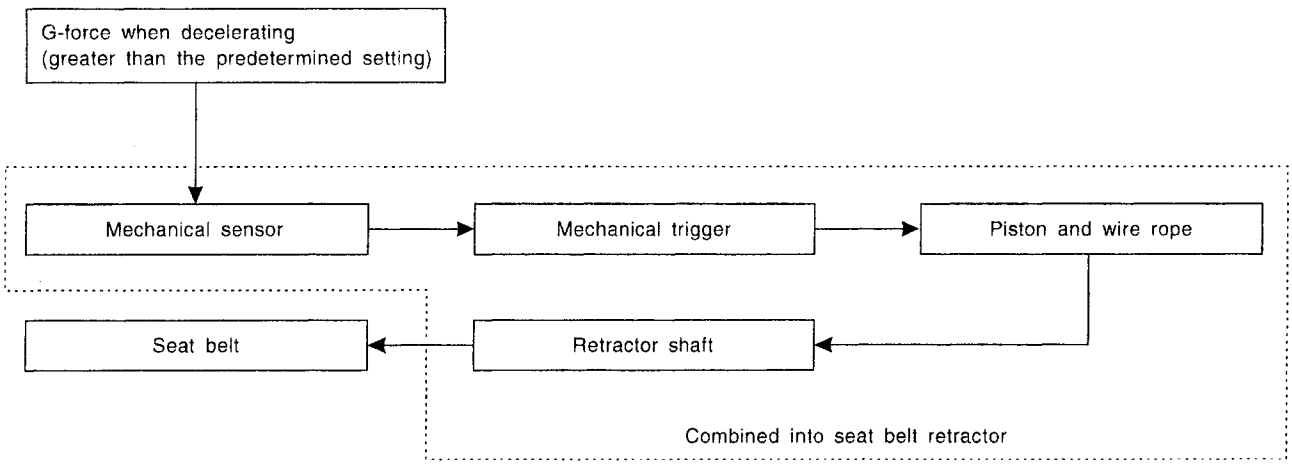

SRS126

RS

Simpo PDF Merge and Split Unregistered Version - http://www.simpopdf.com

SRS Component Parts Location

Dual air bag system and seat belt pre-tensioner
SEC. 251•253•484•680•868

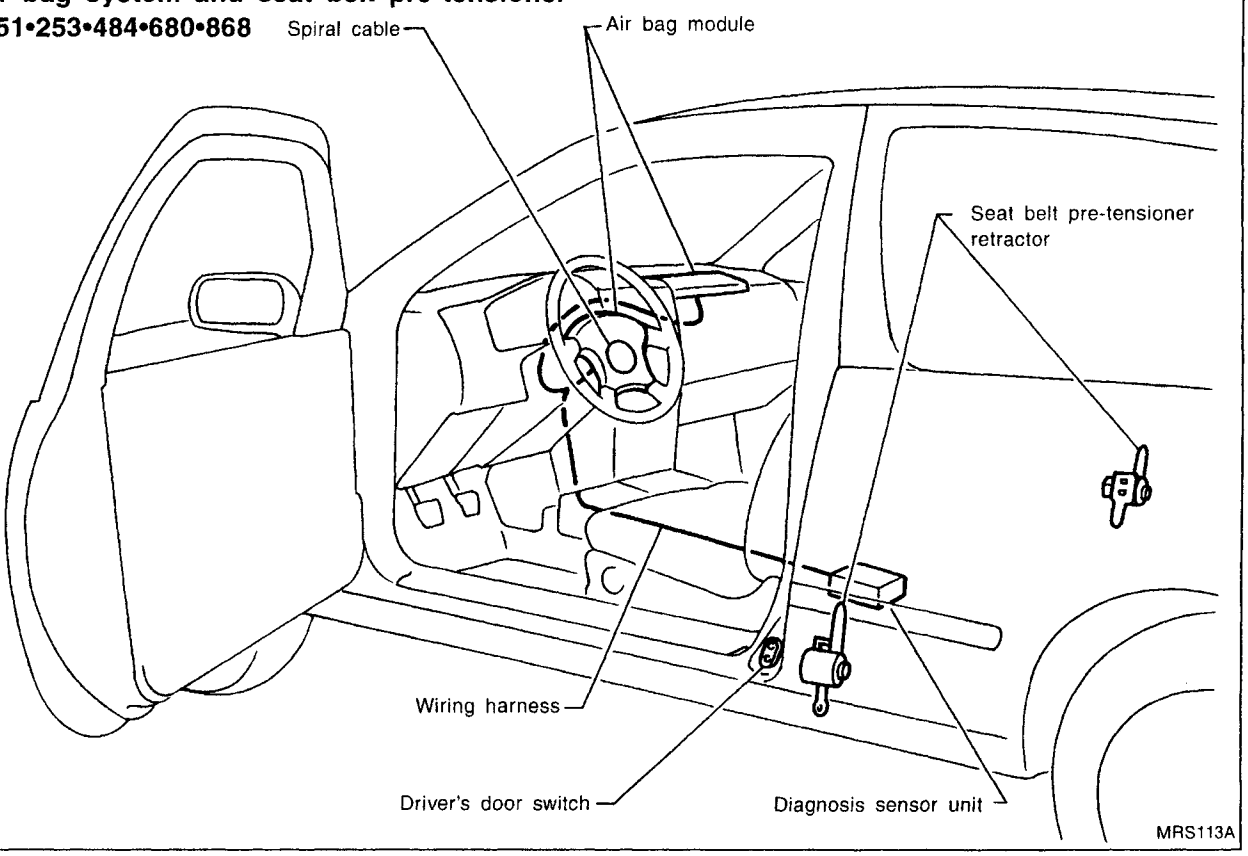

Single air bag system and seat belt pre-tensioner
SEC. 253•484•868

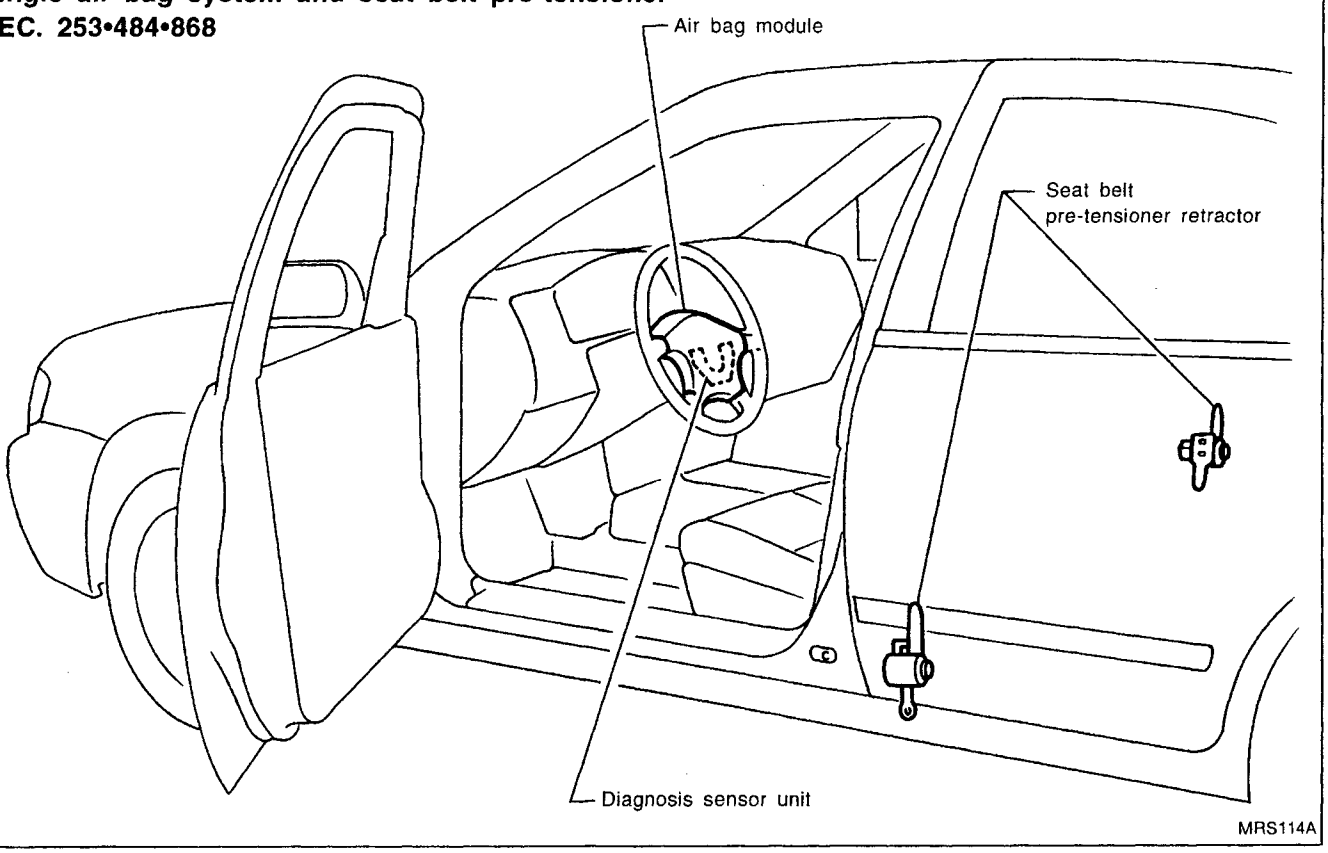

Simpo PDF Merge and Split Unregistered Version - http://www.simpopdf.com



Maintenance Items

1. Check "AIR BAG" warning lamp operation
   After turning ignition key to "ON" position, "AIR BAG" warning lamp illuminates. The "AIR BAG" warning lamp will turn off after about 7 seconds if no malfunction is detected.
   If any of the following air bag warning lamp conditions occur, immediately check the air bag system. Refer to RS-32 and 43 for details.

- The warning lamp does not illuminate when the ignition switch is turned "ON".
- The warning lamp does not turn off about 7 seconds after the ignition switch is turned "ON".
- The warning lamp turns off about 7 seconds after the ignition switch is turned "ON", but it turns on or flashes again.

2. Visually check SRS components

(1) Diagnosis sensor unit

- Check diagnosis sensor unit and bracket for dents, cracks or deformities.
- Check connectors for damage, and terminals for deformities.

(2) Air bag module and steering wheel

- Remove air bag module from steering wheel or instrument panel. Check harness cover and connectors for damage, terminals for deformities, and harness for binding.
- Install driver side air bag module to steering wheel to check fit or alignment with the wheel.
- Check steering wheel for excessive free play.
- For dual air bag system, install passenger side air bag module to instrument panel to check fit or alignment with the instrument panel.

(3) Spiral cable

- Check spiral cable for dents, cracks, or deformities.
- Check connectors and protective tape for damage.
- Check steering wheel for noise, binding or heavy operation.

(4) Main harness and air bag harness (For dual air bag system only)

- Check connectors for poor connections, damage, and terminals for deformities.
- Check harnesses for binding, chafing or cut.

CAUTION:
Replace previously used screws with new ones.

Simpo PDF Merge and Split Unregistered Version - http://www.simopdf.com

Removal and Installation — Diagnosis Sensor Unit

CAUTION:

- **Before servicing SRS, turn the ignition switch off, disconnect both battery cables and wait for at least 10 minutes.**
- **The special bolts are coated with bonding agent while the other bolt is for ground. Do not use old bolts after removal; replace with new ones.**
- **For single air bag system, do not separate diagnosis sensor unit from steering wheel.**
- **For dual air bag system, check diagnosis sensor unit for proper installation.**
- **Check diagnosis sensor unit to ensure they are free of deformities, dents, cracks or rust. If they show any visible signs of damage, replace them with new ones.**
- **Check diagnosis sensor unit brackets to ensure they are free of deformities or rust.**
- **Always work from the side of air bag module.**
- **Replace diagnosis sensor unit if it has been dropped or sustained an impact.**

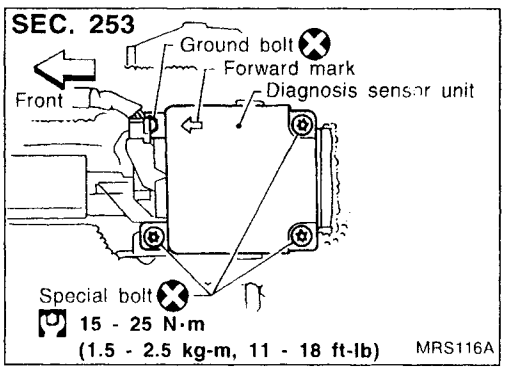

REMOVAL OF DIAGNOSIS SENSOR UNIT

1. Disconnect driver and passenger air bag module connectors. Also, disconnect seat belt pre-tensioner connector.
2. Remove console box. Refer to "INSTRUMENT PANEL" in BT section.
3. Disconnect diagnosis sensor unit connector.
4. Remove bolt and also remove special bolts using the TAMPER RESISTANT TORX (Size T50), from diagnosis sensor unit.
   Then remove the diagnosis sensor unit.

NOTE:

- **To install, reverse the removal procedure sequence.**
- **After replacement, perform self-diagnosis for SRS. Refer to "Self-diagnosis" for details (RS-32 and RS-43).**

Simpo PDF Merge and Split Unregistered Version - http://www.simpopdf.com

Removal and Installation — Seat Belt Pre-tensioner (Mechanical Type)

CAUTION:
- **Do not attempt to disassemble seat belt pre-tensioner assembly.**
- **Do not drop or impact seat belt pre-tensioner assembly. This may cause seat belt pre-tensioner to deploy.**
- **Check seat belt pre-tensioner assembly for damage or deformities.**
- **Replace seat belt pre-tensioner assembly that shows any visible sign of damage.**
- **Do not expose seat belt pre-tensioner to temperatures exceeding 80°C (176°F).**

Seat belt pre-tensioner retracter
SEC. 868

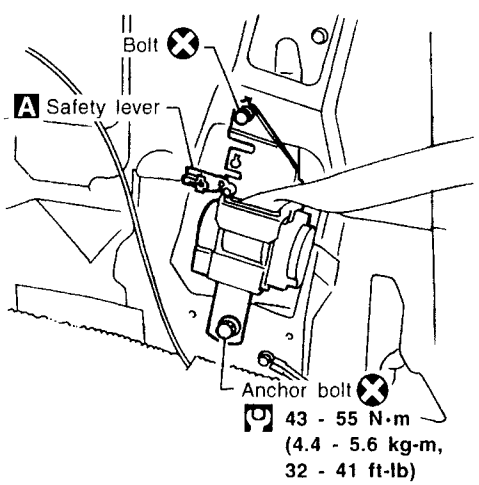

MRS117A

For removal of seat belt pre-tensioner, refer to "Front Seat Belt" for details (RS-3).

CAUTION:
- **Before removing seat belt pre-tensioner assembly, be sure to lock safety lever to make seat belt pre-tensioner inoperative. Do not unlock the safety lever before reinstalling seat belt pre-tensioner assembly.**
- **After removing, place seat belt pre-tensioner assembly in a box (such as a card board box) with the safety lever facing down.**
- **After reinstalling seat belt pre-tensioner assembly, release safety lever lock to make seat belt pre-tensioner operative.**
- **When installing new seat belt pre-tensioner assembly, pull clip out to release safety lever lock. Failure to pull clip out will result in it coming into contact with center pillar trim, thus hampering installation.**

NOTE:
- **To install, reverse the removal procedure sequence.**

A Safety lever position

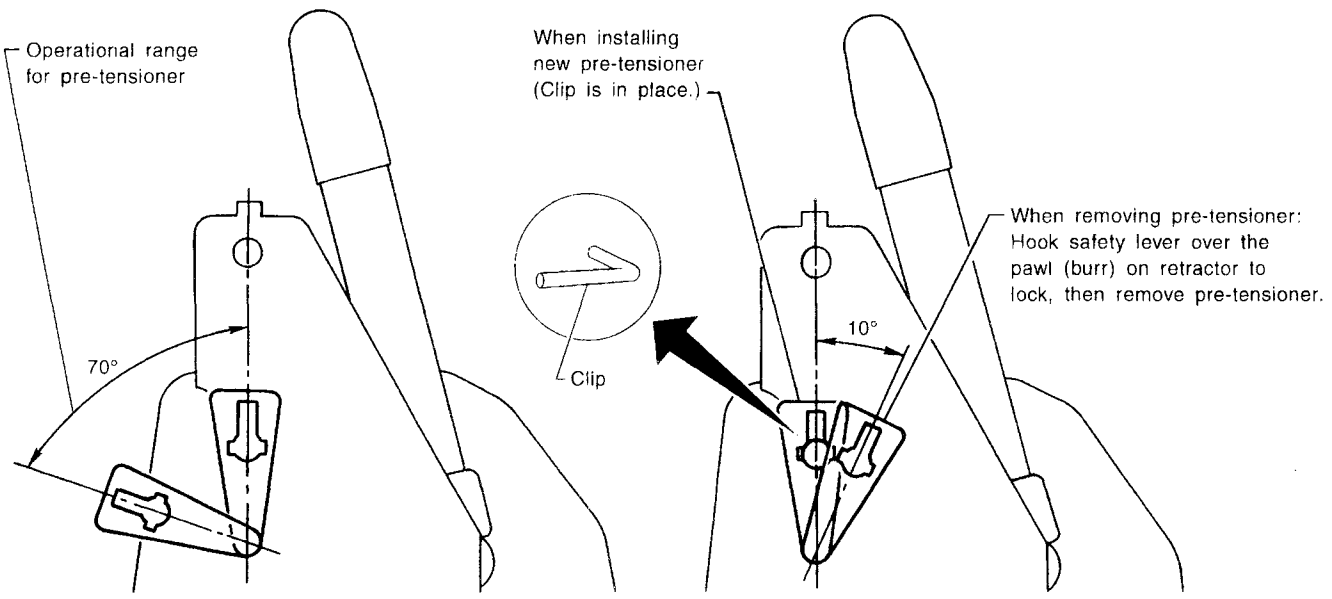

SRS125

RS

Simpo PDF Merge and Split Unregistered Version - http://www.simpopdf.com

Removal and Installation — Air Bag Module and Spiral Cable (Dual Air Bag System)

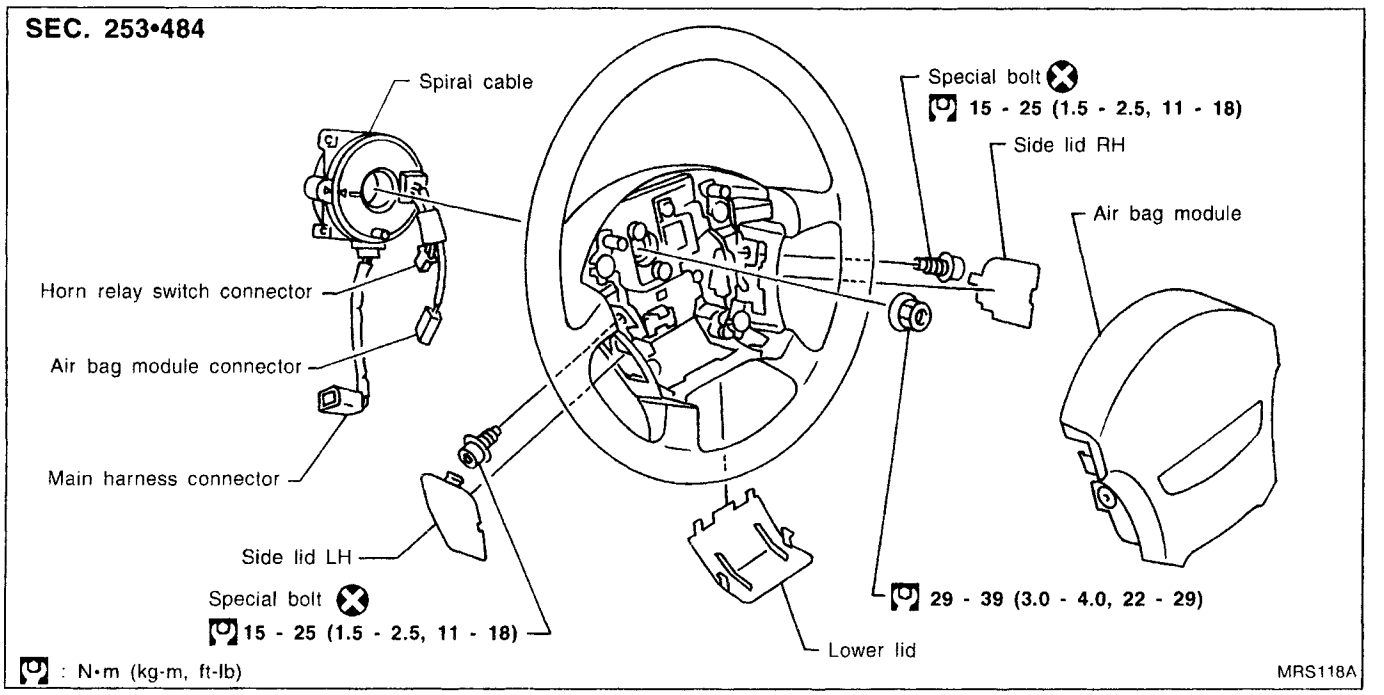

Removal and Installation — Air Bag Module and Spiral Cable (Single Air Bag System)

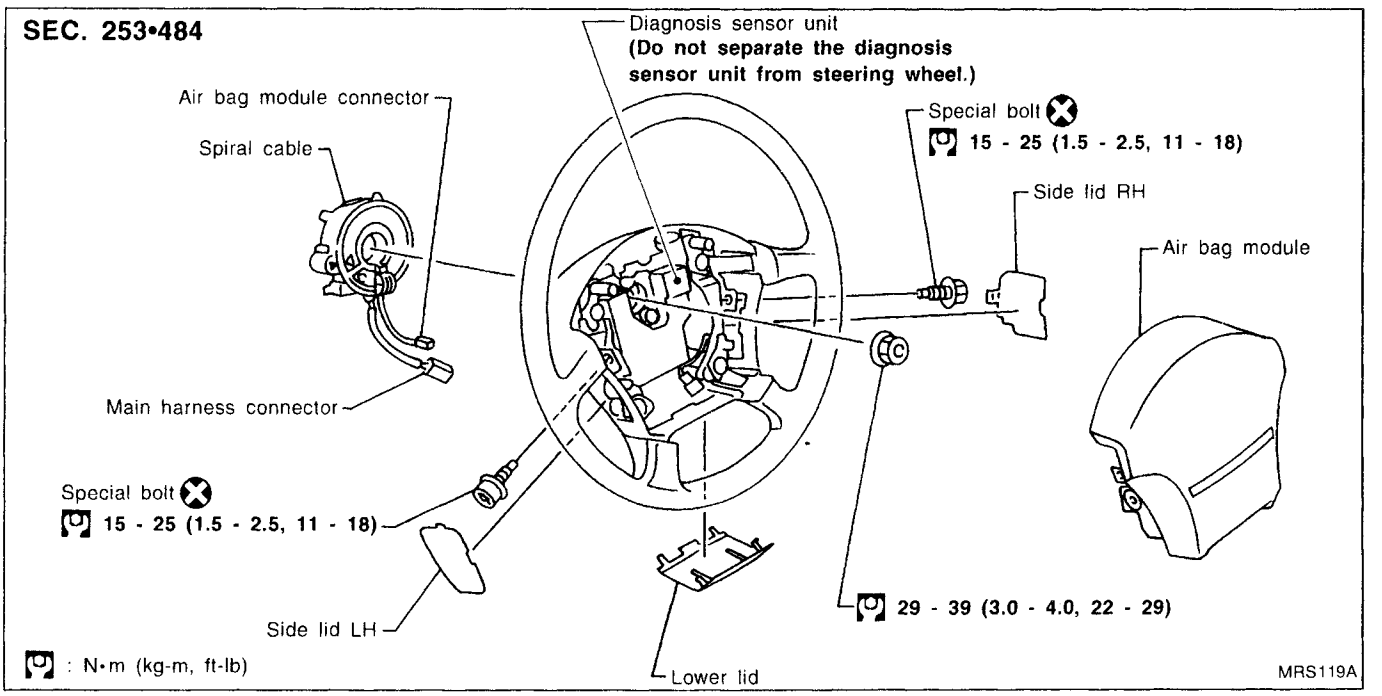

Simpo PDF Merge and Split Unregistered Version - http://www.simpopdf.com

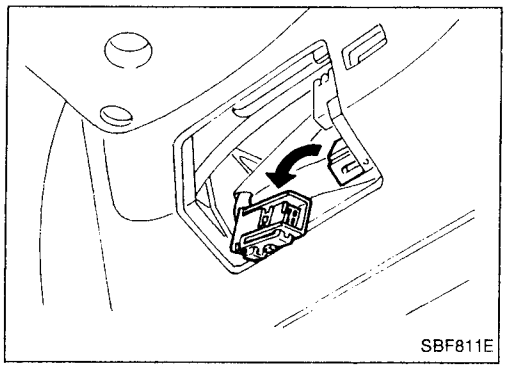
SBF811E

Removal — Air Bag Module and Spiral Cable

CAUTION:

- **Before servicing SRS, turn the ignition switch off, disconnect both battery cables and wait for at least 10 minutes.**
- **Always work from the side of air bag module.**

1. Remove lower lid from steering wheel, and disconnect air bag module connector.

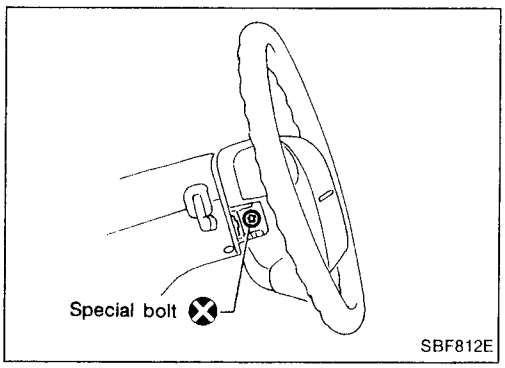

SBF812E

2. Remove side lids. Using the TAMPER RESISTANT TORX (Size T50), remove left and right special bolts. Air bag module can then be removed.

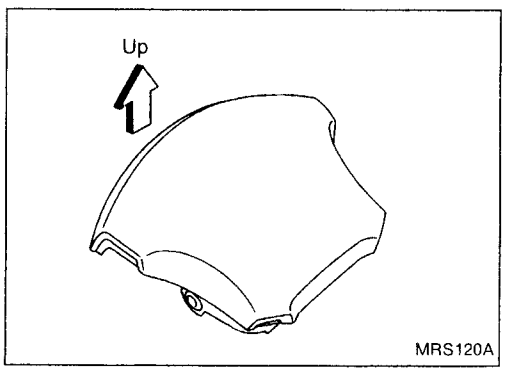

MRS120A

CAUTION:

- **Always place air bag module with pad side facing upward.**
- **Do not attempt to disassemble air bag module.**
- **The special bolts are coated with bonding agent. Do not use old bolts after removal; replace with new ones.**

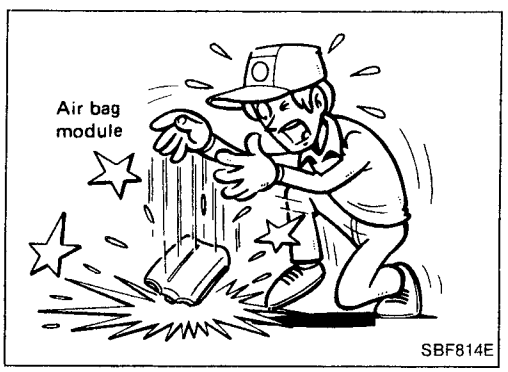

SBF814E

- **Replace air bag module if it has been dropped or sustained an impact.**
- **Do not expose the air bag module to temperatures exceeding 90°C (194°F).**
- **Do not allow oil, grease or water to come in contact with the air bag module.**

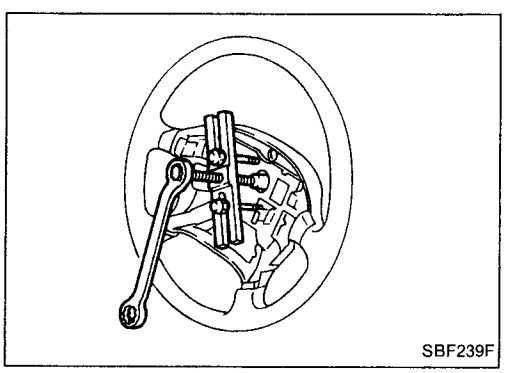
SBF239F

3. Set steering wheel in the neutral position.
4. Disconnect horn connector and remove nuts.
5. Using steering wheel puller, remove steering wheel. Be careful not to over-tighten puller bolt on steering wheel.

CAUTION:

- **Do not tap or bump the steering wheel.**

6. Remove steering column cover.
7. Disconnect connectors and remove the four screws. The spiral cable can then be removed.

CAUTION:

- **Do not attempt to disassemble spiral cable.**
- **Do not apply lubricant to the spiral cable.**

RS

Simpo PDF Merge and Split Unregistered Version - http://www.simpopdf.com

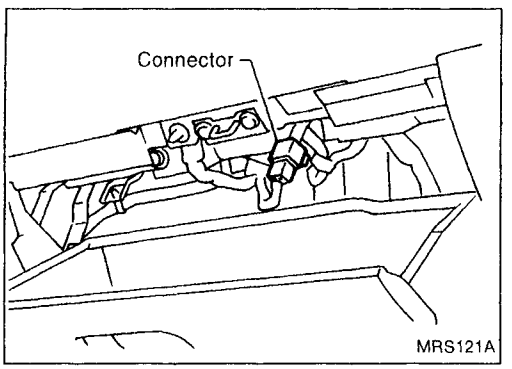

Removal — Front Passenger Air Bag Module (Dual Air Bag System)

CAUTION:

- **Before servicing SRS, turn the ignition switch off, disconnect both battery cables and wait for at least 10 minutes.**
- **Always work from the side of or under air bag module.**

1. Open the glove box lid.
2. Disconnect inflator connector from body harness air bag connector.
3. Remove glove box assembly. Refer to "INSTRUMENT PANEL" in BT section for details.

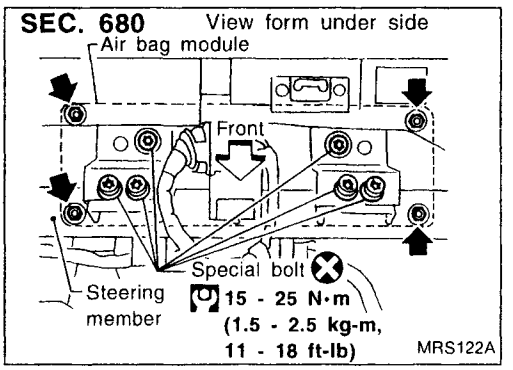

4. Remove the nuts and special bolts using the TAMPER RESISTANT TORX (Size T50) from front passenger air bag module.
   Take out the air bag module from the instrument panel.
- The air bag module is heavy and should be supported using both hands during removal.

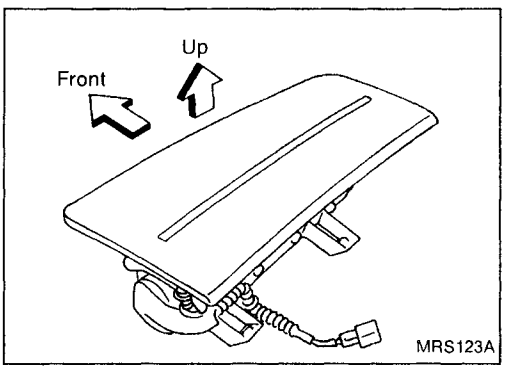

CAUTION:

- **Always place air bag module with pad side facing upward.**
- **Do not attempt to disassemble air bag module.**
- **The special bolts are coated with bonding agent. Do not use old bolts after removal; replace with new coated bolts.**
- **Do not insert foreign objects (screwdriver, etc.) into air bag module connector.**
- **Do not use a circuit tester to check the air bag module harness connector.**

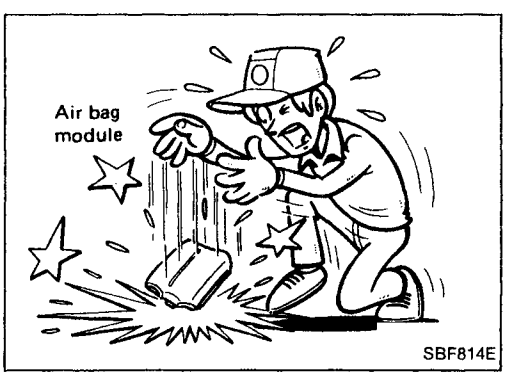

- **Replace air bag module if it has been dropped or sustained an impact.**
- **Do not expose the air bag module to temperatures exceeding 90°C (194°F).**
- **Do not allow oil, grease or water to come in contact with the air bag module.**

Simpo PDF Merge and Split Unregistered Version - http://www.simpopdf.com

Dual air bag system

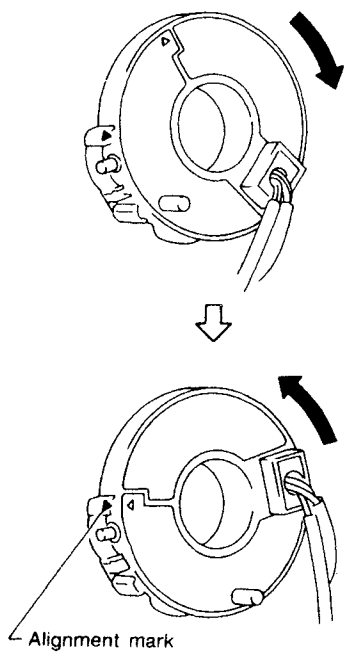

MRS074AA

Single air bag system

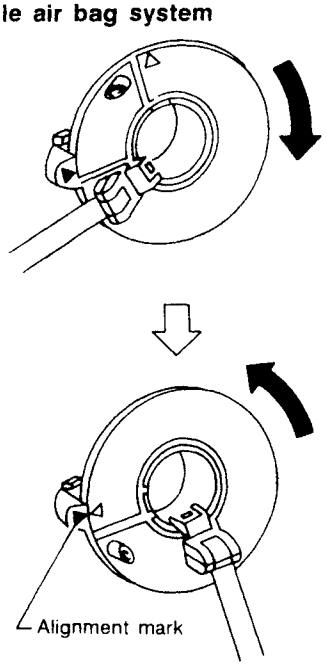

SRS037-A

Dual air bag system

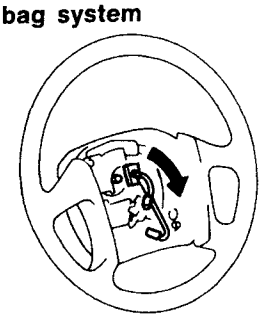

MRS075AA

Installation — Air Bag Module and Spiral Cable

1. Set the front wheels in the straight-ahead position.
2. Make sure that the spiral cable is in the neutral position. The neutral position is detected by turning left about 2.5 revolutions from the right end position. Align the two marks (⧗).

CAUTION:

- **The spiral cable may snap due to steering operation if the cable is installed in an improper position.**
  Also, with the steering linkage disconnected, the cable may snap by turning the steering wheel beyond the limited number of turns. (The spiral cable can be turned up to 2.5 turns from the neutral position to both the right and left.)
- **Always work from the side of air bag module.**

3. Connect spiral cable connector and tighten with screws. Install steering column cover.
4. Install steering wheel setting spiral cable pin guides, and pull spiral cable through.
5. Connect horn connector and engage spiral cable with pawls in steering wheel.
6. Tighten nut.

   : 29 - 39 N·m (3.0 - 4.0 kg-m, 22 - 29 ft-lb)

RS

Simpo PDF Merge and Split Unregistered Version - http://www.simopdf.com

Installation — Air Bag Module and Spiral Cable (Cont'd)

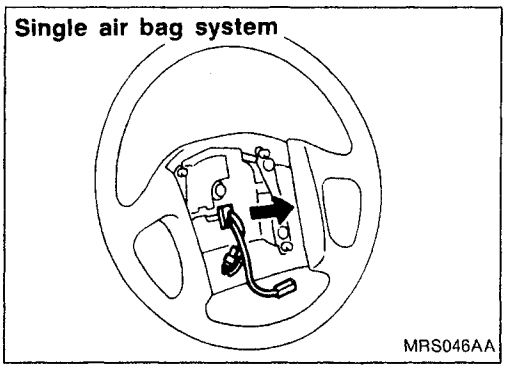

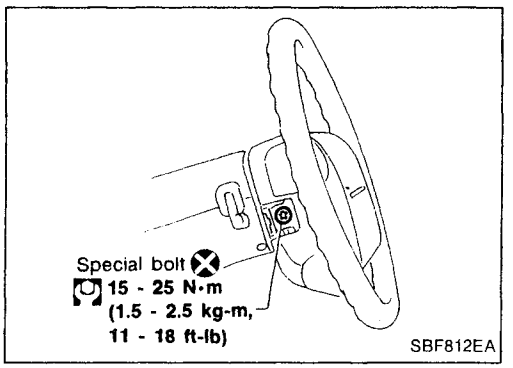

7. Position air bag module and tighten with new special bolts.
8. Connect air bag module connector.
9. Install all lids.
10. Conduct self-diagnosis to ensure entire SRS operates properly. (Use CONSULT or warning lamp check.)
    Before performing self-diagnosis, connect both battery cables.
11. Turn steering wheel to the left end and then to the right end fully to make sure that spiral cable is set in the neutral position.
    If air bag warning lamp blinks or stays ON (at the user mode), it shows the spiral cable may be snapped due to its improper position. Perform self-diagnosis again (use CONSULT or warning lamp). If a malfunction is detected, replace the spiral cable with a new one.

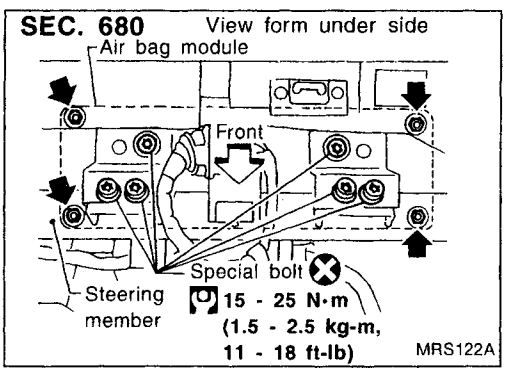

Installation — Front Passenger Air Bag Module (Dual Air Bag System)

- **Always work from the side of air bag module.**

1. Install front passenger air bag module on steering member.
   - Ensure harness is not caught between rear of air bag module and steering member.
2. Install glove box assembly. (Glove box lid is open.)

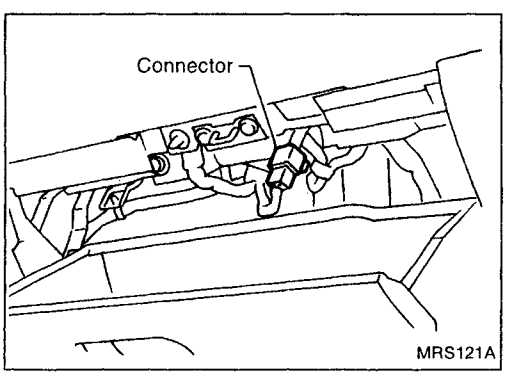

3. Connect air bag module connector to body harness connector.
4. Close the glove box lid.

Simpo PDF Merge and Split Unregistered Version - http://www.simpopdf.com

Disposal of Air Bag Module and Seat Belt Pre-tensioner

- Before disposing of air bag module and seat belt pre-tensioner, or vehicles equipped with such systems, deploy the systems. If such systems have already been deployed due to an accident, dispose of as indicated in "DISPOSING OF AIR BAG MODULE AND SEAT BELT PRE-TENSIONER" (RS-24).
- When deploying the air bag module, always use the Special Service Tool; Deployment tool KV99106400.
- When deploying the air bag module and seat belt pre-tensioner, stand at least 5 m (16 ft) away from the deployment component.
- Due to heat, leave air bag module unattended for more than 30 minutes after deployment. Also leave seat belt pre-tensioner unattended for more than 10 minutes after deployment.
- Be sure to wear gloves when handling a deployed air bag module and seat belt pre-tensioner.
- Never apply water to a deployed air bag module.
- Wash your hands clean after finishing work.
- Do not dispose of the air bag module and seat belt pre-tensioner un-deployed.

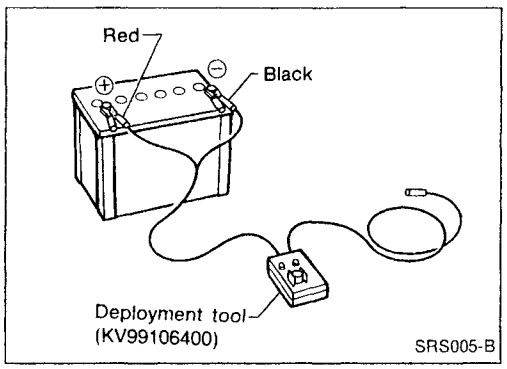

CHECKING DEPLOYMENT TOOL

Connecting to battery

- Place the vehicle outdoors with an open space of at least 6 m (20 ft) on all sides.
- Use a voltmeter to make sure the vehicle battery is fully charged.

CAUTION:

The battery must show voltage of 9.6V or more.

Remove the battery from the vehicle and place it on dry wood blocks approximately 5 m (16 ft) away from the vehicle.

- Wait 10 to 12 minutes after the vehicle battery is disconnected before proceeding.
- Connect red clip of deployment tool to battery positive terminal and black clip to negative terminal.

Make sure the polarity is correct. The right side lamp in the tool, marked "deployment tool power", should glow with a green light. If the right side lamp glows red, reverse the connections to the battery.

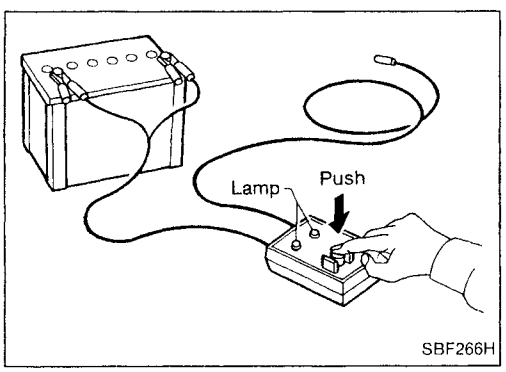

Deployment tool check

Press the deployment tool switch to the "ON" position. The left side lamp in the tool, marked "air bag connector voltage" should illuminate. If it does not illuminate, replace the tool.

Air bag deployment tool lamp illumination chart (Battery connected)

Switch operation	Left side lamp, green* "AIR BAG CONNECTOR VOLTAGE"	Right side lamp, green* "DEPLOYMENT TOOL POWER"
OFF	OFF	ON
ON	ON	ON

*: If this lamp glows red, the tool is connected to the battery incorrectly. Reverse the connections and make sure the lamp glows green.

RS

Simpo PDF Merge and Split Unregistered Version - http://www.simpopdf.com

Disposal of Air Bag Module and Seat Belt Pre-tensioner (Cont'd)

DEPLOYMENT PROCEDURES FOR AIR BAG MODULE (OUTSIDE OF VEHICLE)

Unless the vehicle is being scrapped, deploying the air bag in the vehicle is not recommended. This may cause damage to the vehicle interior.

Anchor air bag module in a vise secured to a firm foundation during deployment.

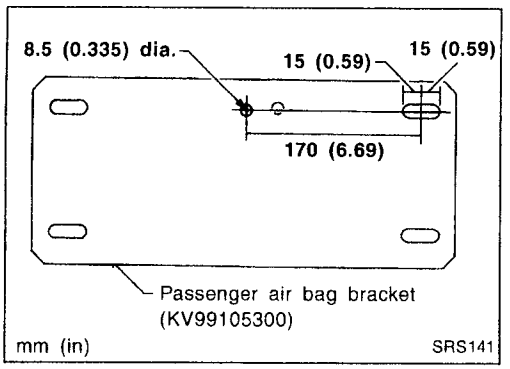

Deployment of driver's air bag module (outside of vehicle)

1. Make an 8.5 mm (0.335 in) diameter hole in passenger air bag bracket (SST: KV99105300) at the position shown in figure at left.
2. Using wire, secure air bag module to passenger air bag bracket (SST: KV99105300) at two places.

CAUTION:
Use wire of at least 1 mm (0.04 in) diameter.

3. Firmly secure passenger air bag bracket (SST: KV99105300) with air bag module attached, in a vise.

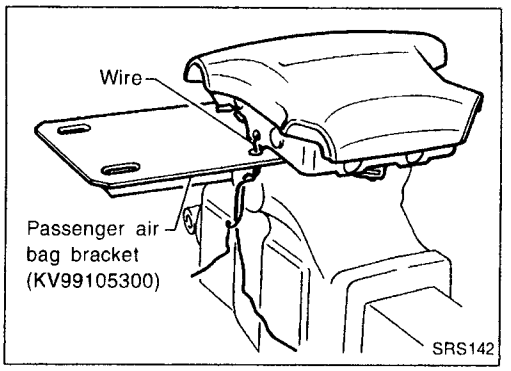

4. Connect deployment tool (SST: KV99106400) to air bag module connector.

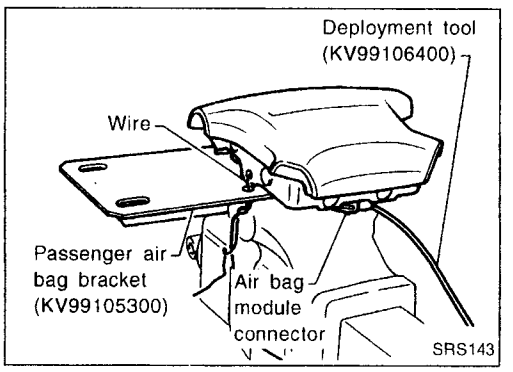

5. Connect red clip of deployment tool to battery positive terminal and black clip to negative terminal.
6. The lamp on the right side of the tool, marked "deployment tool power", should glow green, not red.
7. Press the button on the deployment tool. The left side lamp on the tool, marked "air bag connector voltage", will illuminate and the air bag module will deploy.

CAUTION:
When deploying the air bag module, stand at least 5 m (16 ft) away from the air bag module.

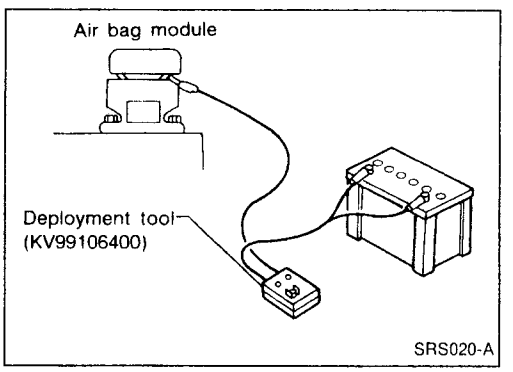

Deployment of passenger air bag module (outside of vehicle)

1. Make an 8.5 mm (0.335 in) diameter hole in passenger air bag bracket (SST: KV99105300) at the position shown in figure at left.

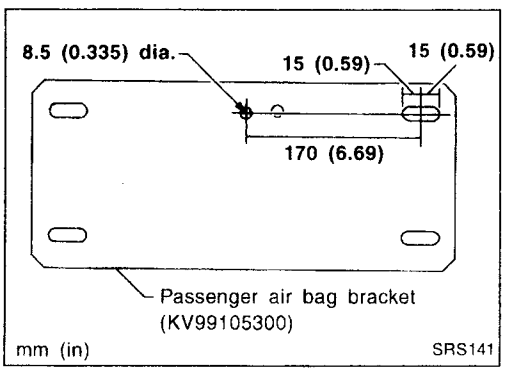

Simpo PDF Merge and Split Unregistered Version - http://www.simpopdf.com

Disposal of Air Bag Module and Seat Belt Pre-tensioner (Cont'd)

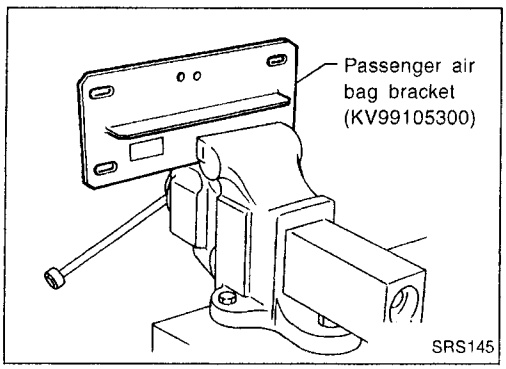

2. Firmly secure passenger air bag bracket (SST: KV99105300) in a vise.

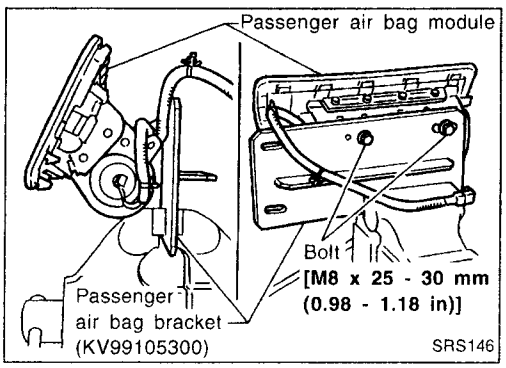

3. Match the two holes in passenger air bag bracket (held in vise) and passenger air bag module and fix them with two bolts [M8 x 25 - 30 mm (0.98 - 1.18 in)].

CAUTION:
If a gap exists between passenger air bag module and passenger air bag bracket, use a piece of wood inserted in the gap to stabilize the air bag module.

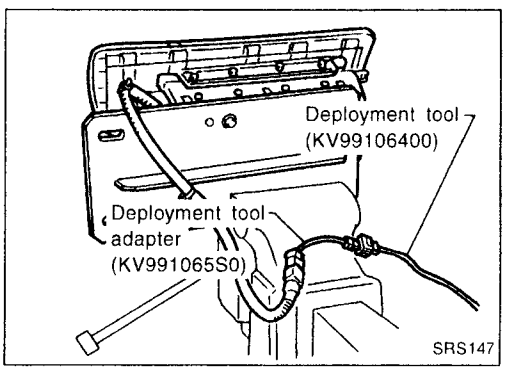

4. Connect deployment tool adapter (SST: KV991065S0) to deployment tool (SST: KV99106400) connector and connector on either side of air bag module.
5. Connect red clip of deployment tool to battery positive terminal and black clip to negative terminal.
6. The lamp on the right side of the tool, marked "deployment tool power", should glow green, not red.
7. Press the button on the deployment tool. The left side lamp on the tool, marked "air bag connector voltage", will illuminate and the air bag module will deploy.

CAUTION:
Whwn deploying the air bag module, stand at least 5 m (16 ft) away from the air bag module.

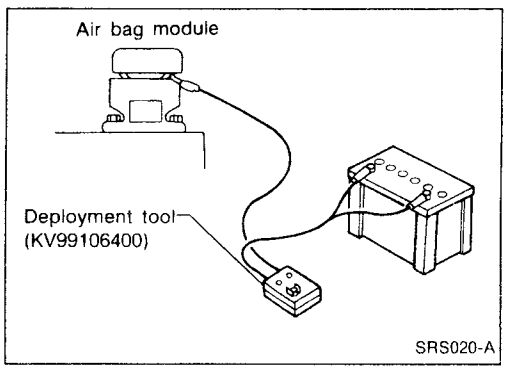

8. Activate the other inflator.

CAUTION:
Always activate one inflator at a time.

RS

Simpo PDF Merge and Split Unregistered Version - http://www.simpopdf.com

Disposal of Air Bag Module and Seat Belt Pre-tensioner (Cont'd)

DEPLOYMENT OF AIR BAG MODULE WHILE MOUNTED IN VEHICLE

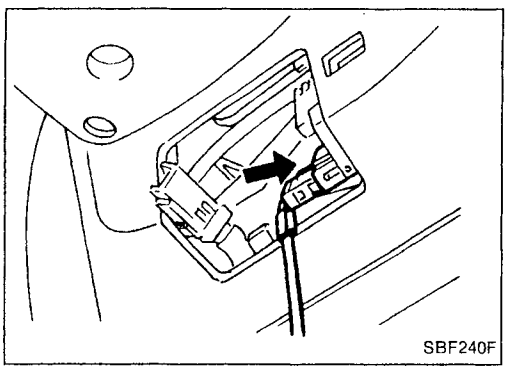
SBF240F

When disposing of a vehicle, deploy air bag module while it is mounted in vehicle.

CAUTION:

When deploying air bag module, ensure vehicle is empty.

1. Disconnect both battery cables and wait 10 minutes.
2. Disconnect air bag module connector.
3. Connect deployment tool (SST: KV99106400) to air bag module.
4. Connect red clip of deployment tool to battery positive terminal and black clip to negative terminal.
5. The lamp on the right side of the tool, marked "deployment tool power", should glow green, not red.
6. Press the button on the deployment tool. The left side lamp on the tool, marked "air bag connector voltage", will illuminate and the air bag module will deploy.

CAUTION:

Active only one passenger air bag module inflator at a time.

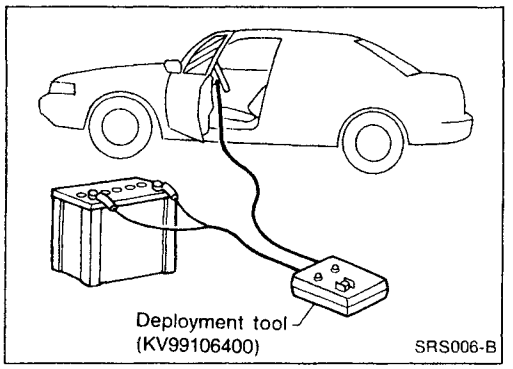

SRS006-B

DEPLOYMENT OF SEAT BELT PRE-TENSIONER (OUTSIDE OF VEHICLE)

1. Remove seat belt unit with pre-tensioner. Refer to RS-3 fordetails.

CAUTION:

Before removing seat belt pre-tensioner assembly, be sure to lock safety lever to make seat belt pre-tensioner inoperative.

2. Cut seat belt off at upper part of pre-tensioner.

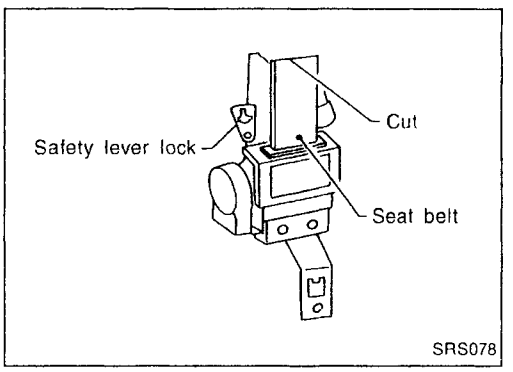

SRS078

3. Tie a strong string at least 6 m (20 ft) long to pre-tensioner body, with pre-tensioner cylinder facing down.

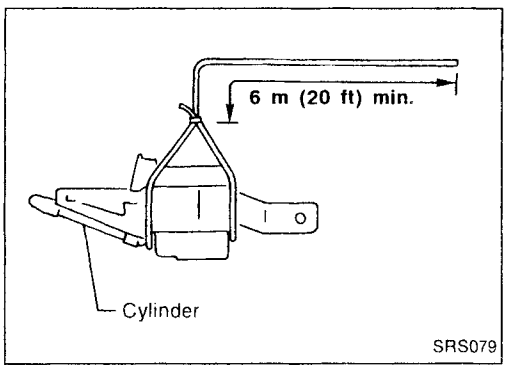

SRS079

4. Move lever in direction of arrow to unlock operation protection system. Pre-tensioner assembly is now ready for operation.

- **After unlocking operation protection system, be careful not to bump pre-tensioner assembly.**

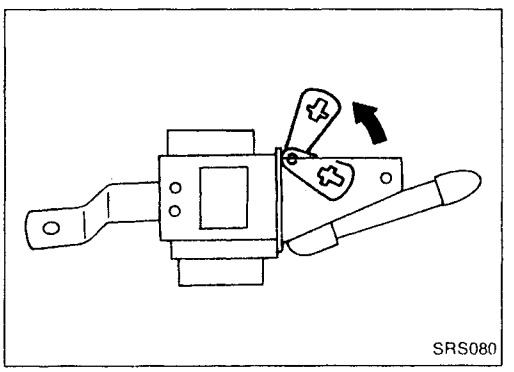
SRS080

Simpo PDF Merge and Split Unregistered Version - http://www.simpopdf.com

Disposal of Air Bag Module and Seat Belt Pre-tensioner (Cont'd)

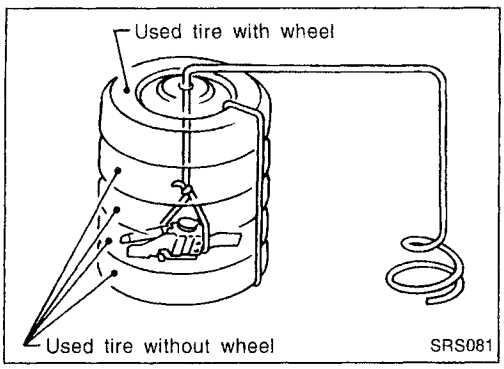

5. Place five used tires (four without rims and one with) on a concrete floor, as shown in the figure, so that they encircle pre-tensioner. Route end of the string through the center of the rim.
- **Make sure pre-tensioner is away from any of the tires to prevent any shocks being applied.**

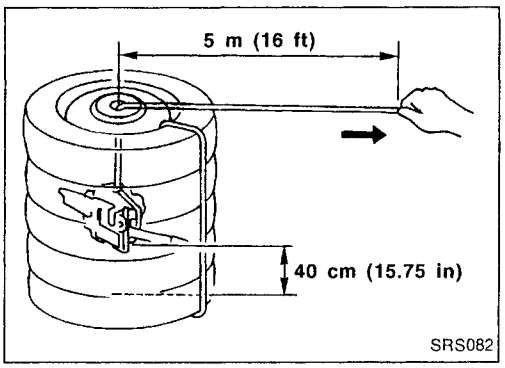

6. From a distance of more than 5 m (16 ft) away from tires, pull string until pre-tensioner is approximately 400 mm (15.75 in) above the ground.
- **Before pulling string, once again for safety, check that the area around the tires is clear.**

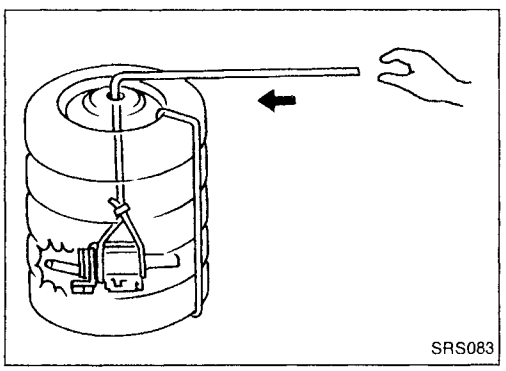

7. Release string to allow the pre-tensioner to hit the ground. Pre-tensioner will now deploy.
- **The pre-tensioner cylinder is too hot to touch immediately after deployment; therefore, wait at least 10 minutes until it cools down.**
- **Although the gas which is discharged during deployment is harmless, avoid inhaling as it can cause some discomfort.**
8. Before disposing of pre-tensioner, re-check that it has properly deployed. If it has not, repeat steps 3 through 7 above.
- **A pre-tensioner deploying can be amply heard even at a distance of 5 m (16 ft).**
- **After pre-tensioner has deployed, the rubber cap is separated from cylinder head by gas generated during deployment.**

RS

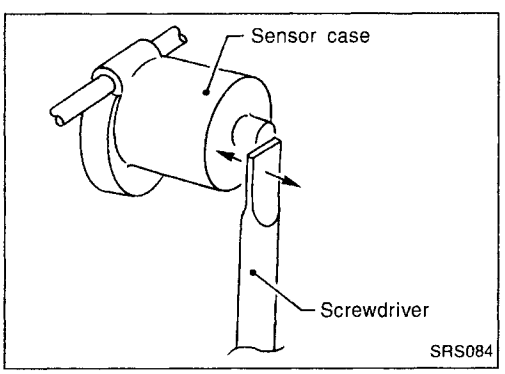

- Move screwdriver or similar ferrous metal close to the magnet built into the rear of sensor case. If it is attracted, pre-tensioner has not deployed yet; if it is not attracted, pre-tensioner has already been deployed.

CAUTION:
Be extremely careful not to apply any impacts to the pre-tensioner until you are absolutely sure pre-tensioner has been deployed.

Simpo PDF Merge and Split Unregistered Version - http://www.simopdf.com

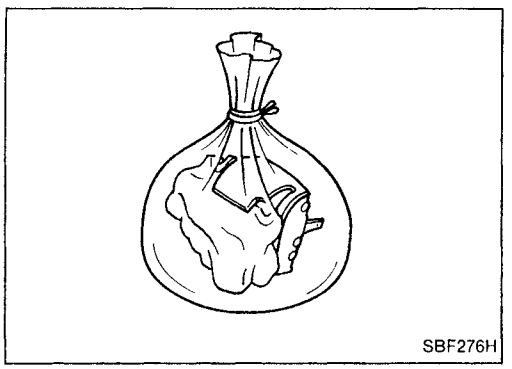
SBF276H

Disposal of Air Bag Module and Seat Belt Pre-tensioner (Cont'd)

DISPOSING OF AIR BAG MODULE AND SEAT BELT PRE-TENSIONER

Deployed air bag module and seat belt pre-tensioner are very hot. Before disposing of air bag module and seat belt pre-tensioner, wait at least 30 minutes. Seal them in a plastic bag before disposal.

CAUTION:

- **Never apply water to a deployed air bag module and seat belt pre-tensioner.**
- **Be sure to wear gloves when handling a deployed air bag module and seat belt pre-tensioner.**
- **No poisonous gas is produced upon air bag module deployment. However, be careful not to inhale gas since it irritates throat and can cause choking.**
- **Do not attempt to disassemble air bag module and seat belt pre-tensioner.**
- **Air bag module and seat belt pre-tensioner can not be re-used.**
- **Wash your hands clean after finishing work.**

Simpo PDF Merge and Split Unregistered Version - http://www.simpopdf.com

How to Perform Trouble Diagnoses for Quick and Accurate Repair

A good understanding of the malfunction conditions can make troubleshooting faster and more accurate. In general, each customer feels differently about a problem. It is important to fully understand the symptoms or conditions for a customer complaint.

INFORMATION FROM CUSTOMER

WHAT ..... Vehicle model
WHEN ..... Date, Frequencies
WHERE ..... Road conditions
HOW ..... Operating conditions, Symptoms

PRELIMINARY CHECK

Check that the following parts are in good order.
- Battery [Refer to MA section ("GENERAL MAINTENANCE").]
- Fuse [Refer to EL section ("Fuse", "POWER SUPPLY ROUTING").]
- System component-to-harness connections

DIAGNOSIS FUNCTION

The SRS self-diagnosis results can be read by using "AIR BAG" warning lamp and/or CONSULT.

	USING WARNING LAMP		USING CONSULT
	User mode	Diagnosis mode	
Dual air bag system	X	X	X
Single air bag system	X		
Seat belt pre-tensioner			

The reading of these results is accomplished using one of two modes — "User mode" and "Diagnosis mode".
The User mode is exclusively prepared for the customer (driver). This mode warns the driver of a system malfunction through the operation of the "AIR BAG" warning lamp.
The Diagnosis mode allows the technician to locate and inspect the malfunctioning part.
The mode applications for the "AIR BAG" warning lamp and CONSULT are as follows:

	User mode	Diagnosis mode	Display type
"AIR BAG" warning lamp	X	X	ON-OFF operation
CONSULT		X	Monitoring

Seat belt pre-tensioner can not be diagnosed by using warning lamp and/or CONSULT. When seat belt pre-tensioner is requires servicing, visually check seat belt pre-tensioner assembly. If damaged, replace with a new one.

DIAGNOSIS MODE FOR CONSULT (For Dual Air Bag System)

- SELF-DIAG RESULTS
  A current Self-diagnosis result (also indicated by the number of warning lamp flashes in the Diagnosis mode) is displayed on the CONSULT screen in real time. This refers to a malfunctioning part requiring repairs.

Simpo PDF Merge and Split Unregistered Version - http://www.simpopdf.com

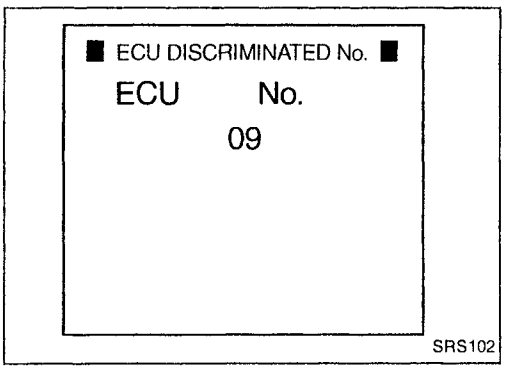

How to Perform Trouble Diagnoses for Quick and Accurate Repair (Cont'd)

- ECU DISCRIMINATED NO.
  The diagnosis sensor unit for each vehicle model is assigned with its own, individual classification number. This number will be displayed on the CONSULT screen, as shown at left. When replacing the diagnosis sensor unit, refer to the part number for the compatibility. After installation, replacement with a correct unit can be checked by confirming this classification number on the CONSULT screen.
  For NISSAN model N15, the diagnosis sensor unit classification number assigned is 09.

Simpo PDF Merge and Split Unregistered Version - http://www.simpopdf.com

How to Perform Trouble Diagnoses for Quick and Accurate Repair (Cont'd)

CAUTION:

- **Do not use a circuit tester to check SRS harness connectors unless instructed to in this Service Manual. For dual air bag system, SRS wiring harnesses are covered with yellow insulation either just before the harness connectors or for complete harness, for easy identification.**
- **Do not attempt to repair, splice or modify the SRS wiring harness. If the harness is damaged, replace it with a new one.**
- **Keep ground portion clean.**

WORK FLOW

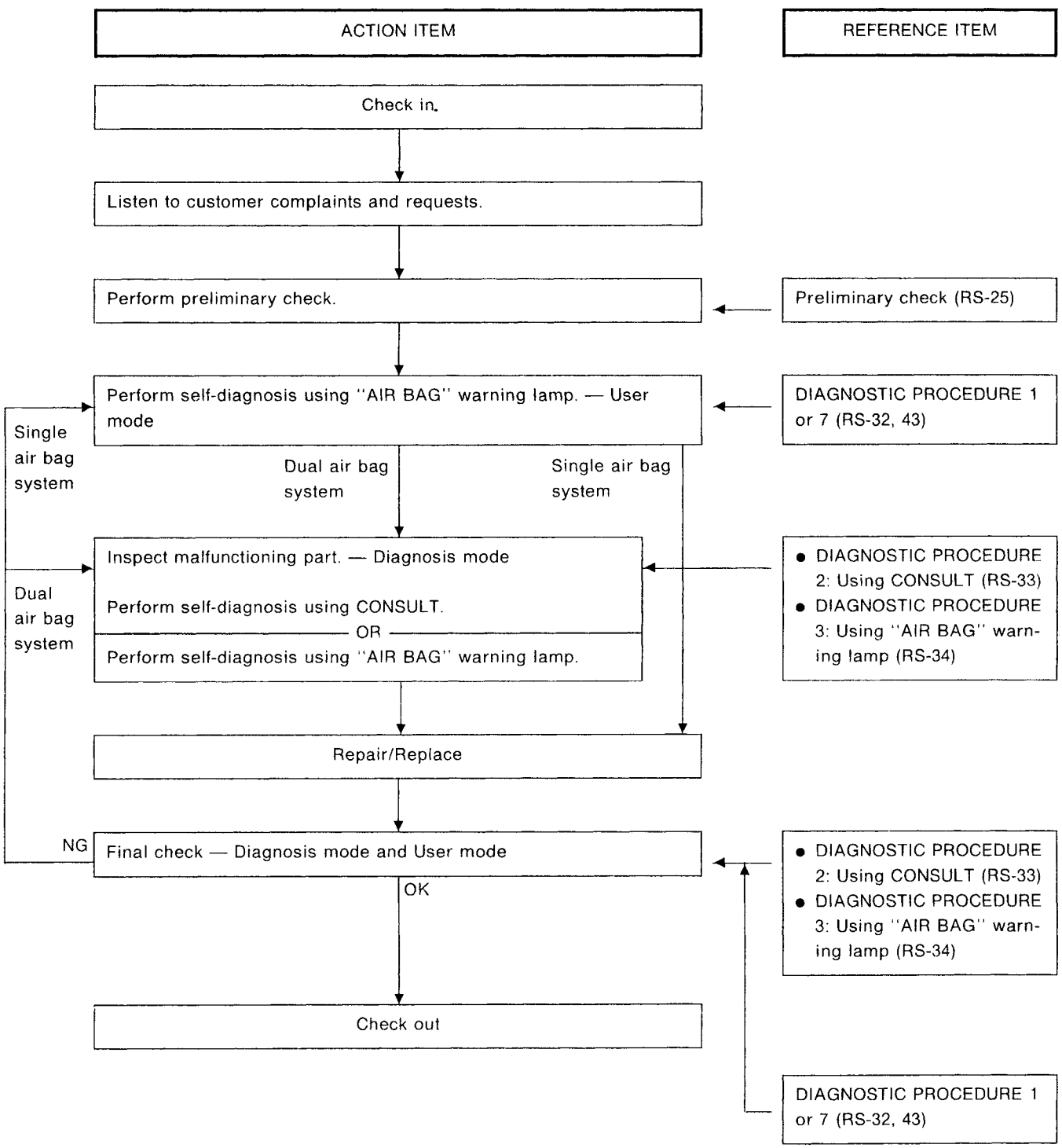

RS

Simpo PDF Merge and Split Unregistered Version - http://www.simpopdf.com

Schematic

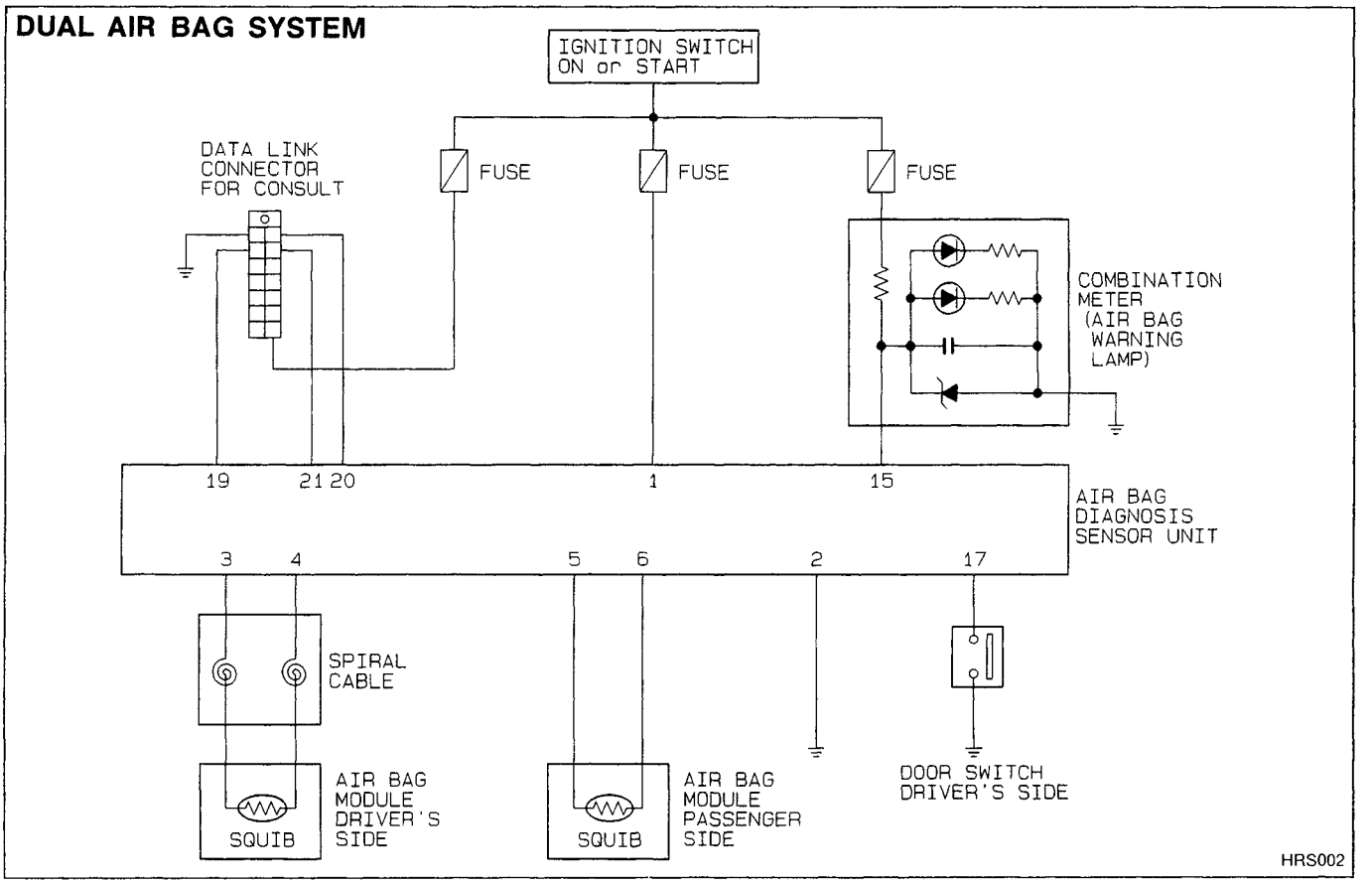

Simpo PDF Merge and Split Unregistered Version - http://www.simpopdf.com

Wiring Diagram — SRS —

DUAL AIR BAG SYSTEM

RS-SRS-02

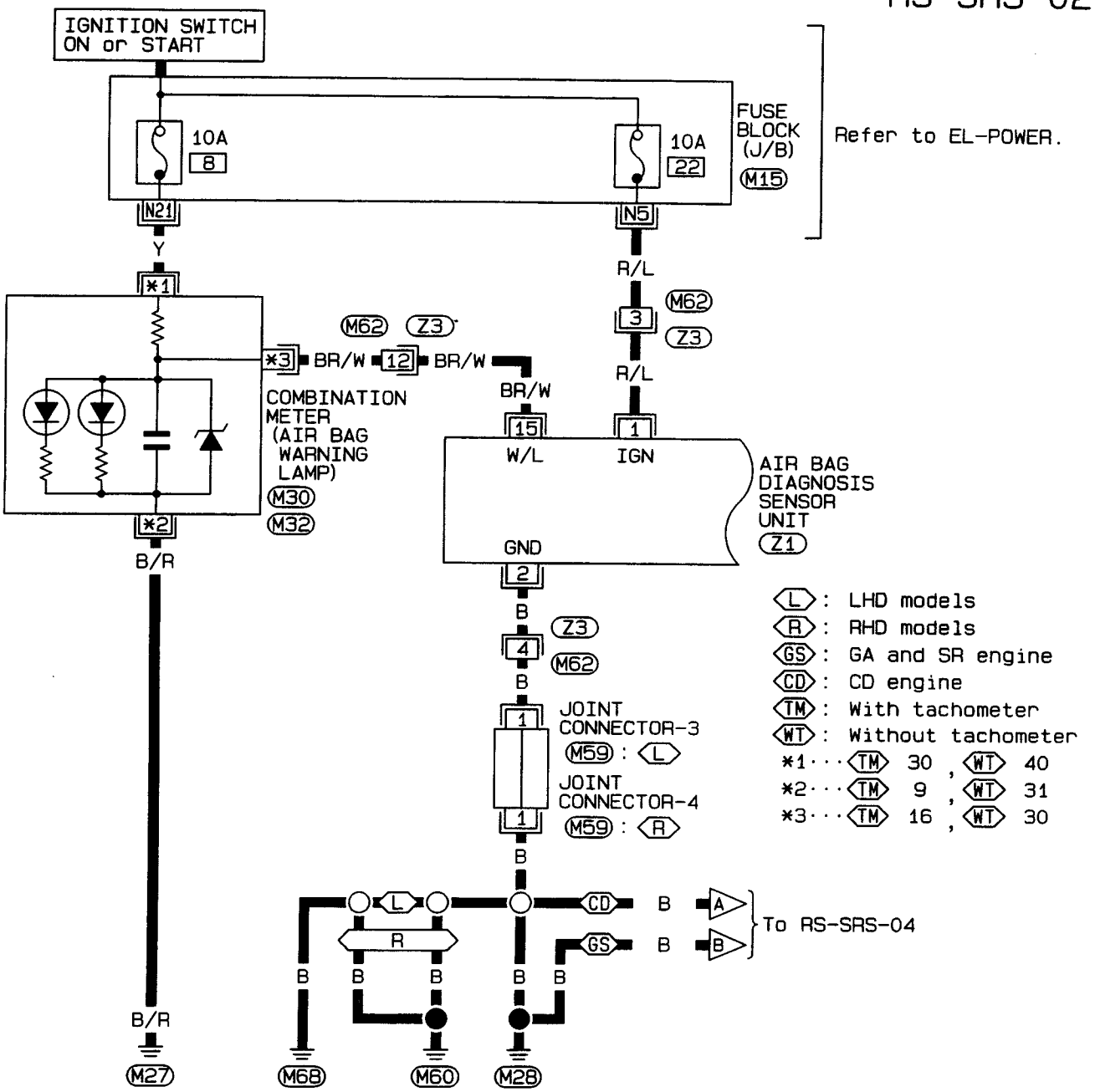

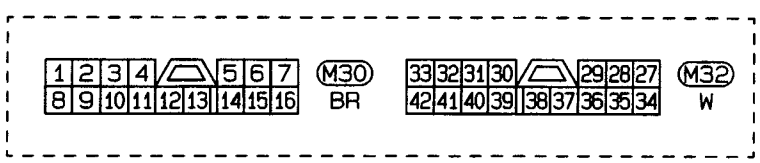

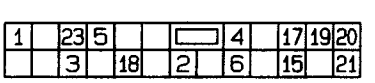

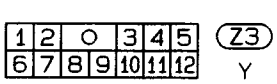

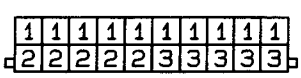

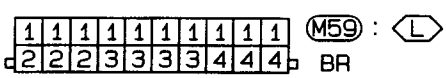

Refer to last page (Foldout page).

M15

HRS004

RS

Simpo PDF Merge and Split Unregistered Version - http://www.simpopdf.com

Wiring Diagram — SRS — (Cont'd)

RS-SRS-03

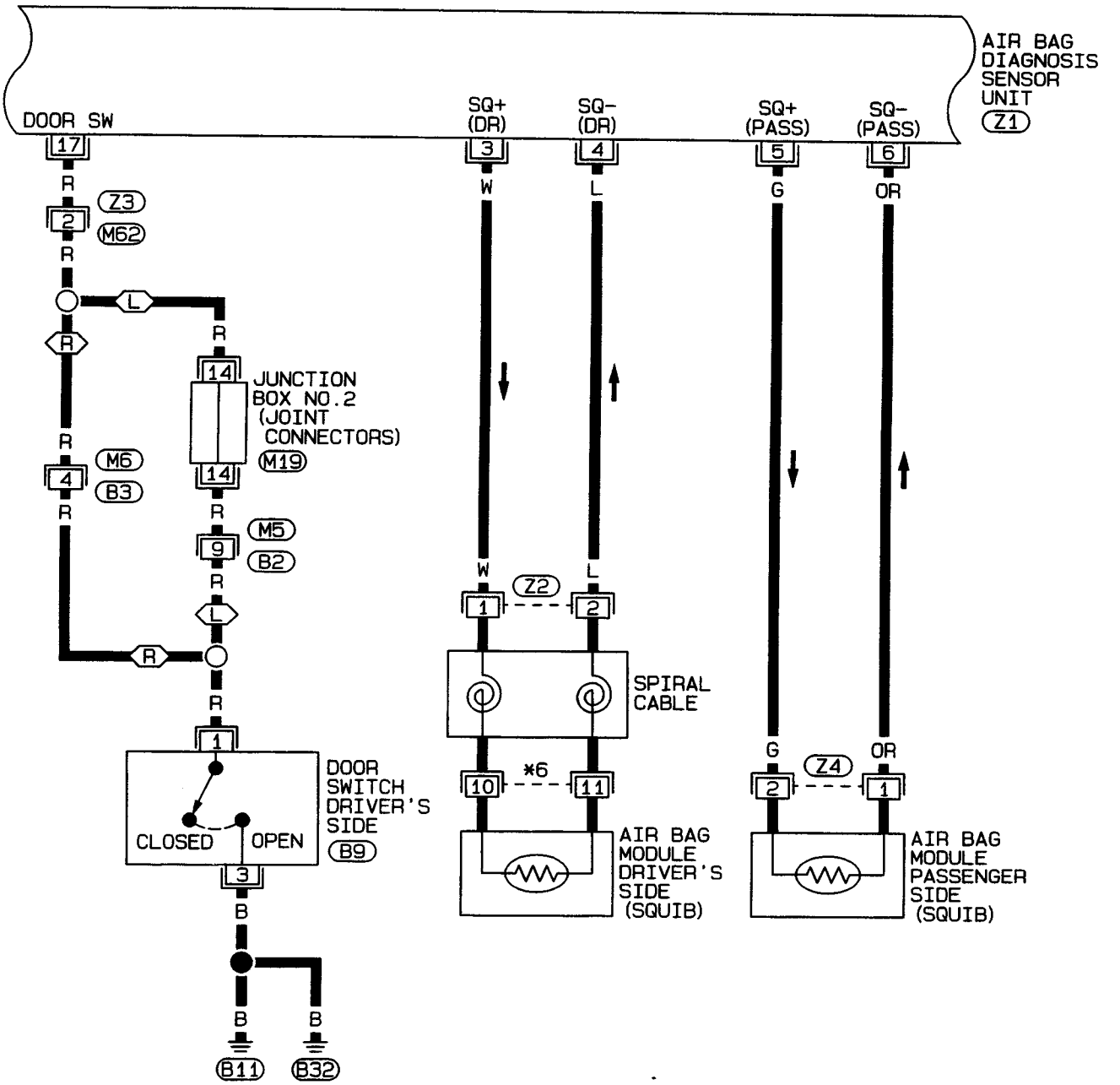

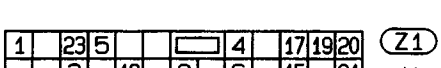

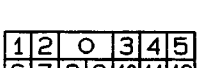

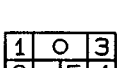

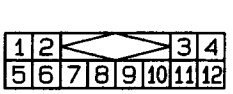

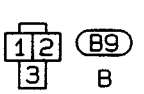

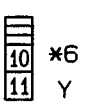

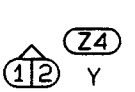

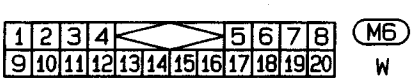

Refer to last page (Foldout page).

M19

HRS005

Simpo PDF Merge and Split Unregistered Version - http://www.simpopdf.com

Wiring Diagram — SRS — (Cont'd)

RS-SRS-04

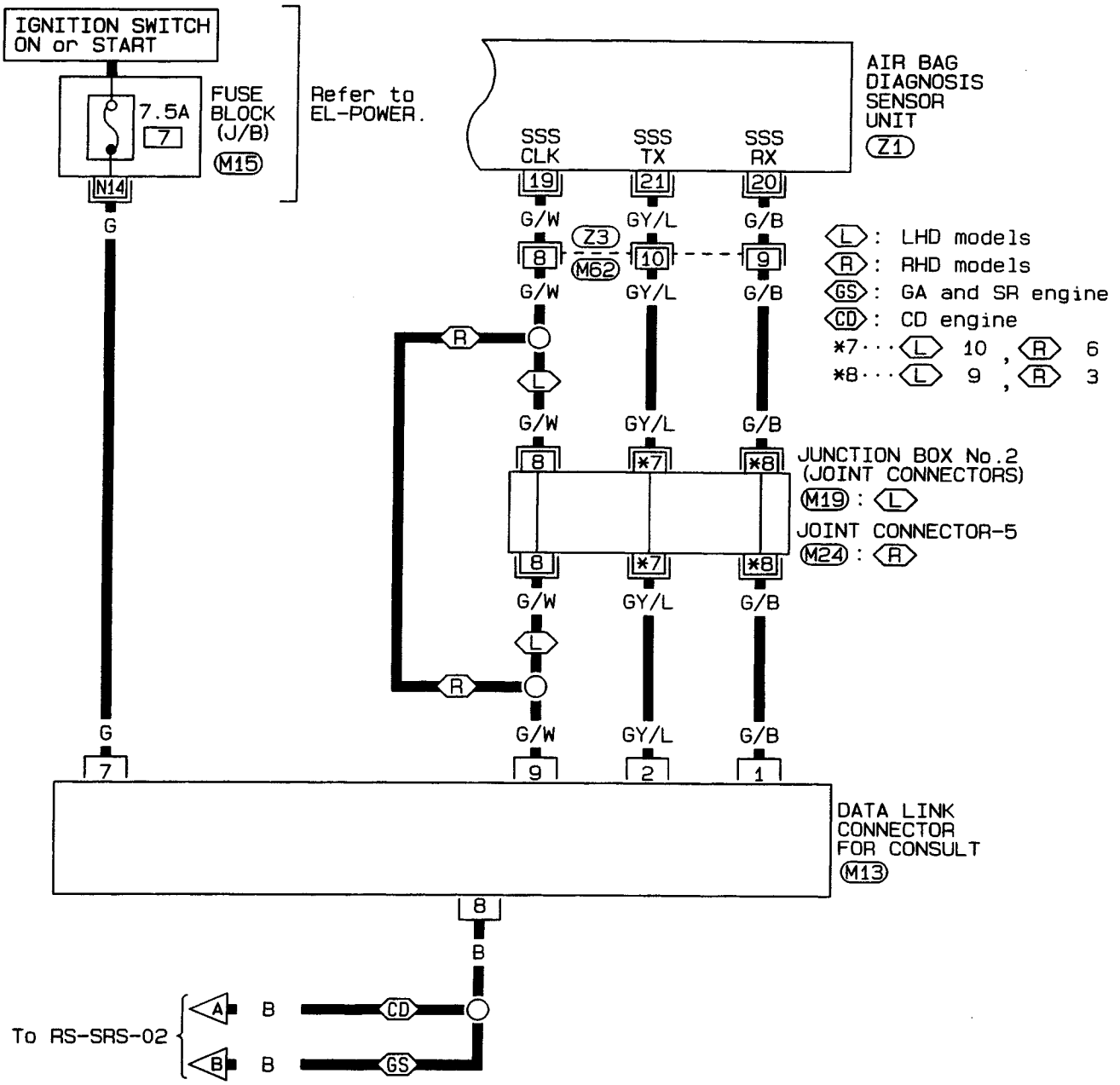

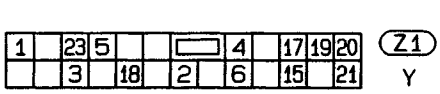

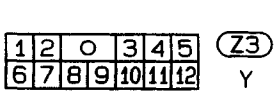

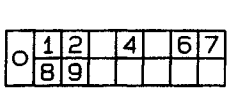

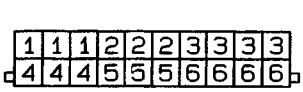

Refer to last page (Foldout page).

M15

M19

HRS006

RS

Simpo PDF Merge and Split Unregistered Version - http://www.simpopdf.com

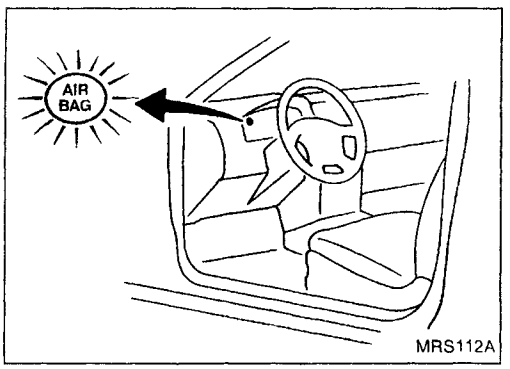

Self-diagnosis

DIAGNOSTIC PROCEDURE 1 (without CONSULT)

Checking SRS operation by using "AIR BAG" warning lamp — User mode

1. After turning ignition switch from "OFF" to "ON", "AIR BAG" warning lamp operates.
2. Compare "AIR BAG" warning lamp operation to the chart below.

"AIR BAG" warning lamp operation — User mode —	SRS condition	Reference item
 MRS095A	No malfunction is detected. No further action is necessary.	—
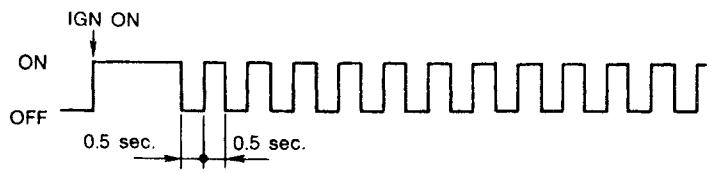 MRS096A	The system has problem and needs to be repaired as indicated.	Go to DIAGNOSTIC PROCEDURE 2, or 3 (RS-33 or 34).
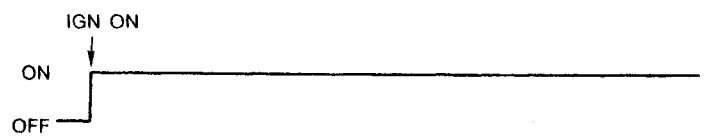 MRS097A	Air bag is deployed.	Go to COLLISION DIAGNOSIS (RS-40).
	Fuse, diagnosis sensor unit or harness is malfunctioning and needs to be repaired.	Go to DIAGNOSTIC PROCEDURE 4 (RS-38).
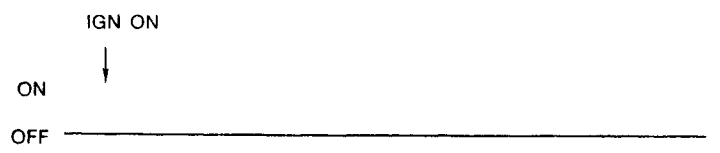 MRS098A	Diagnosis sensor unit or "AIR BAG" warning lamp circuit is shorted or open and needs to be repaired.	Go to DIAGNOSTIC PROCEDURE 5 (RS-38).

NOTE:
If "AIR BAG" warning lamp operates differently from the operations shown above, refer to "AIR BAG" warning lamp operation — Diagnosis mode —, DIAGNOSTIC PROCEDURE 3, RS-34. Then repair as necessary.

Simpo PDF Merge and Split Unregistered Version - http://www.simpopdf.com

Self-diagnosis (Cont'd)

DIAGNOSTIC PROCEDURE 2 (with CONSULT)

Inspecting SRS malfunctioning parts by using CONSULT — Diagnosis mode

1. Turn ignition switch "OFF".
2. Connect "CONSULT" to Data link connector.

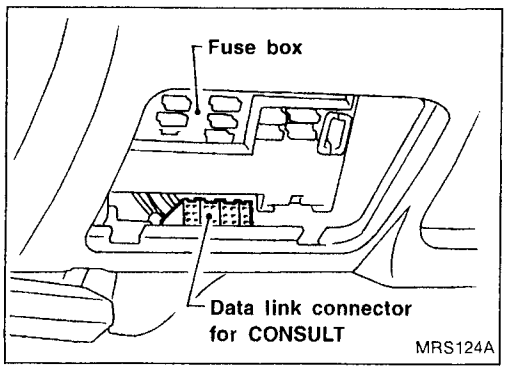

3. Turn ignition switch "ON".
4. Touch "START".

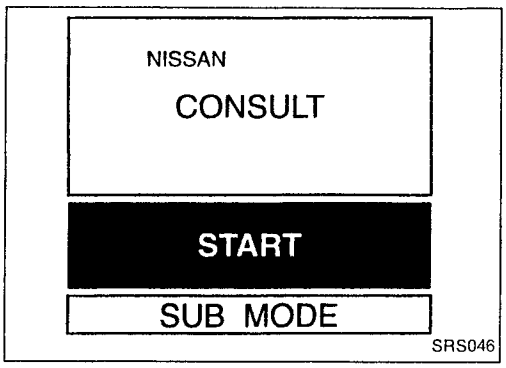

5. Touch "AIRBAG".

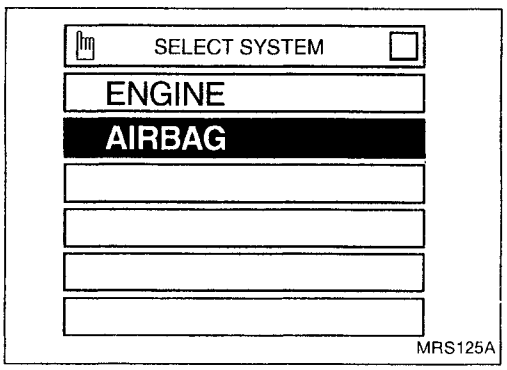

6. Touch "SELF-DIAG RESULTS".

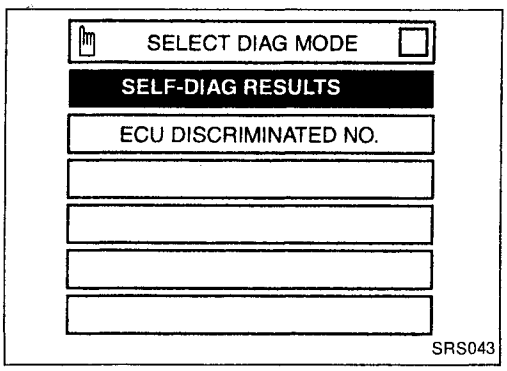

7. Diagnostic codes are displayed on "SELF-DIAG RESULTS".

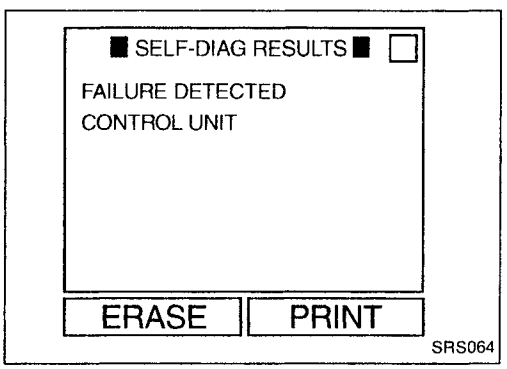

RS

Simpo PDF Merge and Split Unregistered Version - http://www.simpopdf.com

Self-diagnosis (Cont'd)

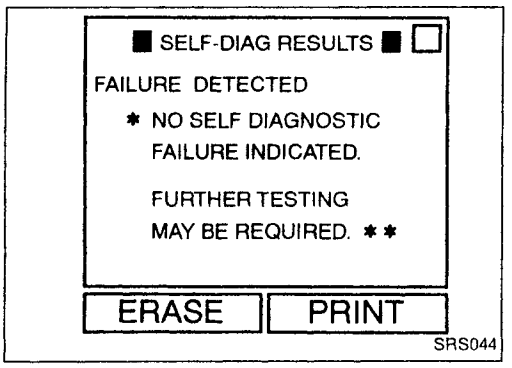

If no self-diagnostic failure is detected on "SELF-DIAG RESULTS", no further action is necessary. Touch "BACK" key of CONSULT until SELECT SYSTEM MODE appears, then turn off CONSULT.

8. Touch "PRINT".
9. Compare diagnostic codes to the CONSULT DIAGNOSTIC CODE CHART, page RS-36.
10. Touch "BACK" key of CONSULT until SELECT SYSTEM MODE appears, then turn off CONSULT.
11. Turn ignition switch "OFF", then disconnect CONSULT and both battery cables.
12. Repair the system as outlined by the "Repair order" in CONSULT DIAGNOSTIC CODE CHART, that corresponds to the problem code. For replacement procedure of component parts, refer to RS-12.
13. After repairing the system, conduct DIAGNOSTIC PROCEDURE 2 again.
    If repair is completed, turn ignition switch "OFF", and disconnect CONSULT. Then go to DIAGNOSTIC PROCEDURE 1, page RS-32.

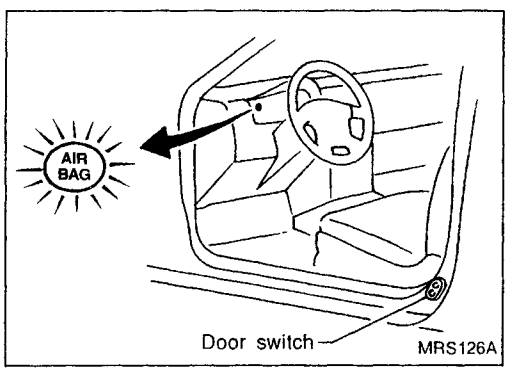

DIAGNOSTIC PROCEDURE 3 (without CONSULT)

Inspecting SRS malfunctioning parts by using "AIR BAG" warning lamp — Diagnosis mode

1. Open driver's door.
2. Turn ignition switch from "OFF" to "ON".
3. Press driver's door switch at least 5 times within 7 seconds after turning ignition switch "ON".
   SRS is now in Diagnosis mode.
4. "AIR BAG" warning lamp operates in diagnosis mode as follows:

NOTE:
If SRS does not enter diagnostic mode, go to DIAGNOSTIC PROCEDURE 6, page RS-39.

Simpo PDF Merge and Split Unregistered Version - http://www.simpopdf.com

Self-diagnosis (Cont'd)

No.	"AIR BAG" warning lamp operation — Diagnosis mode —	SRS condition
1	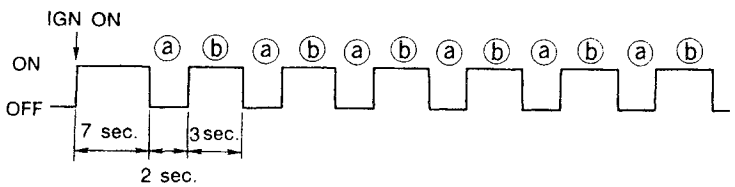 MRS100A ⓐ through ⓑ are repeated.	No malfunction is detected. No further action is necessary.
2	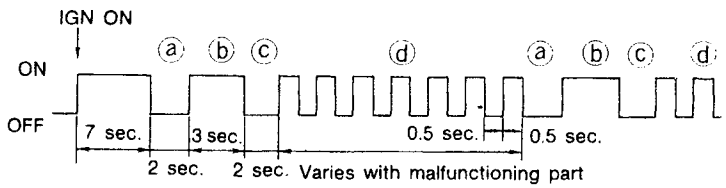 MRS099A ⓐ through ⓓ are repeated. NOTE: ⓐ — Interval I ⓑ — Start signal (Start signal identifies display modes) ⓒ — Interval II ⓓ — Indicates malfunctioning part (0.5 sec. ON and 0.5 sec. OFF is counted as one flash.)	The system has problem and needs to be repaired.

5. Malfunctioning part is indicated by the number of flashes (part ⓓ). Compare the number of flashes to WARNING LAMP FLASH CODE CHART, page RS-37, and locate malfunctioning part.
6. Turn ignition switch "OFF", and disconnect both battery cables.
7. Repair the system as outlined by the "Repair order" in WARNING LAMP FLASH CODE CHART that corresponds to the flash code. For replacement procedure of component parts, refer to RS-12.
8. After repairing the system, conduct DIAGNOSTIC PROCEDURE 3 again.
   If repair is completed, turn ignition switch "OFF" and then turn "ON". Press driver's door switch at least 5 times within 7 seconds after turning ignition switch "ON".
9. The system is reset from Diagnostic mode to User mode. Next, go to DIAGNOSTIC PROCEDURE 1, page RS-32.

Simpo PDF Merge and Split Unregistered Version - http://www.simpopdf.com

Self-diagnosis (Cont'd)

CONSULT DIAGNOSTIC CODE CHART

Diagnostic item	Explanation	Repair order Recheck SRS at each replacement.
NO SELF DIAGNOSTIC FAILURE INDICATED.	• No malfunction is detected.	—
AIRBAG MODULE [OPEN]	• Driver's air bag module circuit is open. (including the spiral cable)	1. Visually check the wiring harness connections. 2. Replace the spiral cable. 3. Replace driver's air bag module. (Before disposing of it, it must be deployed.) 4. Replace the diagnosis sensor unit. 5. Replace the air bag harness.
AIRBAG MODULE [VB-SHORT]	• Driver's air bag module circuit is shorted to some power supply circuit. (including the spiral cable)	
AIRBAG MODULE [GND-SHORT]	• Driver's air bag module circuit is shorted to ground. (including the spiral cable)	
AIRBAG MODULE [SHORT]	• Driver's air bag module circuits are shorted to each other.	
ASSIST A/B MODULE [OPEN]	• Front passenger air bag module circuit is open.	1. Visually check the wiring harness connections. 2. Replace front passenger air bag module. (Before disposing of it, it must be deployed.) 3. Replace the diagnosis sensor unit. 4. Replace the air bag harness.
ASSIST A/B MODULE [VB-SHORT]	• Front passenger air bag module circuit is shorted to some power supply circuit.	
ASSIST A/B MODULE [GND-SHORT]	• Front passenger air bag module circuit is shorted to ground.	
ASSIST A/B MODULE [SHORT]	• Front passenger air bag module circuits are shorted to each other.	
CONTROL UNIT	• Diagnosis sensor unit is out of order.	1. Visually check the wiring harness connections. 2. Replace the diagnosis sensor unit. 3. Replace the air bag harness. 4. Replace the main harness.

*** Follow the procedures in numerical order when repairing malfunctioning parts. Confirm whether malfunction is eliminated using the air bag warning lamp (in user mode) or CONSULT each time repair is finished. If malfunction is still observed, proceed to the next step. When malfunction is eliminated, further repair work is not required.**

Simpo PDF Merge and Split Unregistered Version - http://www.simpopdf.com

Self-diagnosis (Cont'd)

WARNING LAMP FLASH CODE CHART

Warning lamp	Flash code ⓓ (# of flashes)	Explanation	Repair order Recheck SRS at each replacement.
"AIR BAG" warning lamp	0	No malfunction is detected.	—
	2	The driver's air bag module circuit is out of order.	1. Visually check the wiring harness connections. 2. Replace the spiral cable. 3. Replace the driver's air bag module. (Before disposing of it, it must be deployed.) 4. Replace the diagnosis sensor unit. 5. Replace the air bag harness.
	7	The diagnosis sensor unit is out of order.	1. Visually check the wiring harness connections. 2. Replace the diagnosis sensor unit. 3. Replace the air bag harness. 4. Replace the main harness.
	8	The front passenger air bag module circuit is out of order.	1. Visually check the wiring harness connections. 2. Replace the front passenger air bag module. (Before disposing of it, it must be deployed.) 3. Replace the diagnosis sensor unit. 4. Replace the air bag harness.

*** Follow the procedures in numerical order when repairing malfunctioning parts. Confirm whether malfunction is eliminated using the air bag warning lamp (in user mode) or CONSULT each time repair is finished. If malfunction is still observed, proceed to the next step. When malfunction is eliminated, further repair work is not required.**

RS

Simpo PDF Merge and Split Unregistered Version - http://www.simpopdf.com

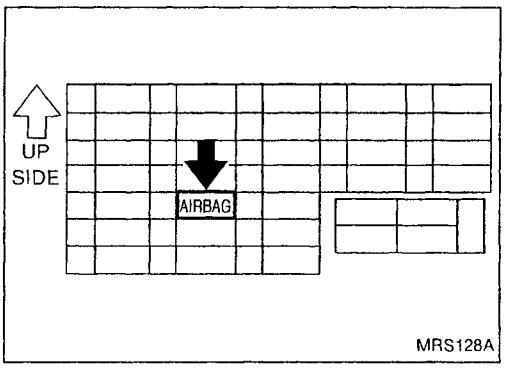

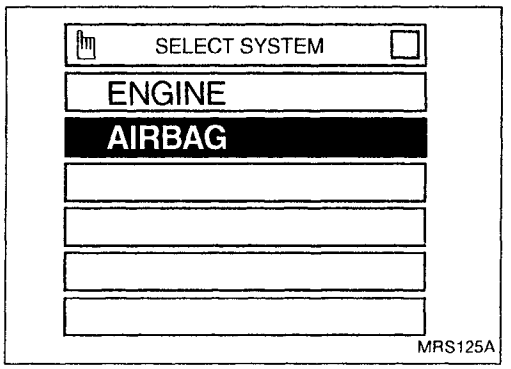

Trouble Diagnoses for Air Bag Warning Lamp

DIAGNOSTIC PROCEDURE 4

SYMPTOM: "AIR BAG" warning lamp does not turn off.

Is air bag module deployed? — Yes → Replace air bag module and diagnosis sensor unit. Refer to COLLISION DIAGNOSIS, (RS-40).

No ↓

Is SRS "Air Bag" fuse (10A) OK? — No → Replace fuse.

Yes ↓

Connect CONSULT and touch "START".
- Is "AIRBAG" displayed on CONSULT? — No → Replace diagnosis sensor unit.

Yes ↓

Is harness connection between warning lamp and diagnosis sensor unit OK? — No → Connect warning lamp and diagnosis sensor unit properly. If warning lamp still does not go off, replace harness.

Yes ↓

Replace diagnosis sensor unit.

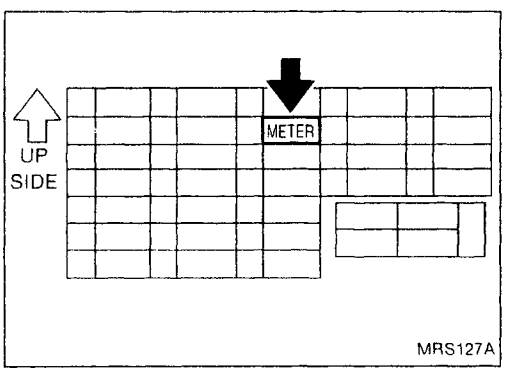

DIAGNOSTIC PROCEDURE 5

SYMPTOM: "AIR BAG" warning lamp does not turn on.

Is warning lamp fuse OK? — No → Replace fuse.

Yes ↓

Is warning lamp LED OK?- — No → Replace warning lamp LED.

Yes ↓

Is harness connection between warning lamp and diagnosis sensor unit OK? — No → Connect warning lamp harness properly. If warning lamp still does not come on, replace harness.

Yes ↓

Replace diagnosis sensor unit.

Simpo PDF Merge and Split Unregistered Version - http://www.simpopdf.com

Trouble Diagnoses for Air Bag Warning Lamp (Cont'd)

DIAGNOSTIC PROCEDURE 6

SYMPTOM: SRS does not enter Diagnostic mode.

A



MRS115A

Is "AIR BAG" warning lamp blinking?

No → SRS is in good order. Setting the CONSULT to the Diagnosis mode is impossible. No further action is necessary.

Yes ↓

B

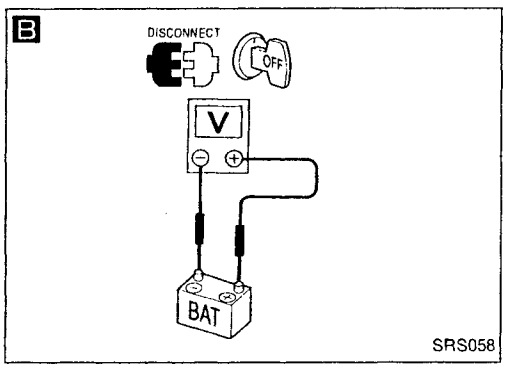

SRS058

Disconnect both battery cables and check battery voltage using circuit tester.
- Is battery voltage more than 9V?

No → Charge battery.

Yes ↓

C

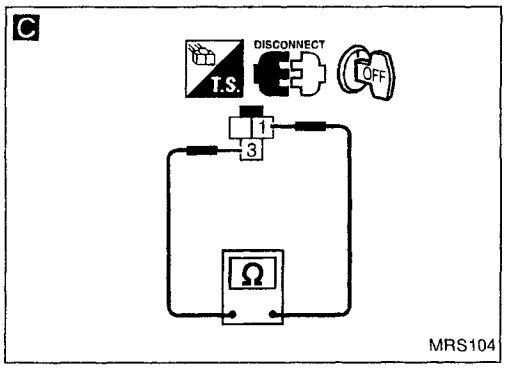

MRS104

Remove driver's door switch and check continuity between driver's door switch connector terminals ① and ③ under the following conditions.

Condition	Continuity
Door switch is depressed (Door is closed).	YES
Door switch is released (Door is open).	NO

No → Replace driver's door switch.

Yes ↓

D

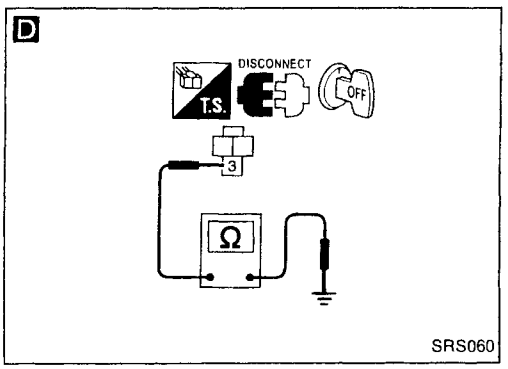

SRS060

Check harness continuity between driver's door switch connector terminal ③ and body ground.
- Does continuity exist?

No → Replace or repair harness.

Yes ↓

Replace diagnosis sensor unit.

↓

Go to DIAGNOSTIC PROCEDURE 3.

RS

Simpo PDF Merge and Split Unregistered Version - http://www.simpopdf.com

To repair the SRS, perform the following steps.

When SRS is activated in a collision:

① Replace the diagnosis sensor unit.
② Remove the air bag modules.
③ Check the SRS components using the table shown below:
- Replace any SRS components showing visible signs of damage (dents, cracks, deformation).

④ Conduct self-diagnosis. Refer to "Self-diagnosis" for details (RS-32). Ensure the remainder of the SRS is operating properly.
⑤ Install new air bag modules.
⑥ Conduct self-diagnosis again.

When SRS is not activated in a collision:

① Check the SRS components using the table shown below:
- Replace any SRS components showing visible signs of damage (dents, cracks, deformation).

② Conduct self-diagnosis using CONSULT and "AIR BAG" warning lamp. Refer to "Self-diagnosis" for details (RS-32). Ensure entire SRS operates properly.

SRS inspection

Part	SRS is activated	SRS is NOT activated
Air bag module (driver and passenger side)	REPLACE Install with new bolts.	1. Remove air bag module. Check harness cover and connectors for damage, terminals for deformities, and harness for binding. 2-1. Install driver air bag module into the steering wheel to check fit and alignment with the wheel. 2-2. Install passenger air bag module into the instrument panel to check fit with the instrument panel. 3. No damage found, reinstall with new bolts. 4. If damaged—REPLACE. Air bag must be deployed before discarding.
Instrument panel	REPLACE Install with new bolts.	1. Check instrument panel for bending, deformities, or cracks. 2. If no damage is found, reinstall with new bolts. 3. If damaged—REPLACE.
Diagnosis sensor unit	REPLACE Install with new bolts.	1. Check case and bracket for dents, cracks or deformities. 2. Check connectors for damage, and terminals for deformities. 3. If no damage is found, reinstall with new bolts. 4. If damaged—REPLACE.
Steering wheel	1. Visually check steering wheel for deformities. 2. Check harness (built into steering wheel) and connectors for damage, and terminals for deformities. 3. Install air bag module to check fit or alignment with steering wheel. 4. Check steering wheel for excessive free play. 5. If no damage is found, reinstall with new bolts. 6. If damaged—REPLACE.	
Spiral cable	1. Visually check lock (engagement) pins and combination switch for damage. 2. Check connectors, flat cable and protective tape for damage. 3. Check steering wheel for noise, binding or heavy operation. 4. If no damage is found, reinstall with new bolts. 5. If damaged—REPLACE.	
Harness and Connectors	1. Check connectors for poor connection, damage, and terminals for deformities. 2. Check harness for binding, chafing, cuts, or deformities. 3. If no damage is found, reinstall the harness and connectors. 4. Damaged—REPLACE damaged section of harness. Do not attempt to repair, splice or modify any SRS harness.	

Simpo PDF Merge and Split Unregistered Version - http://www.simpopdf.com

Schematic

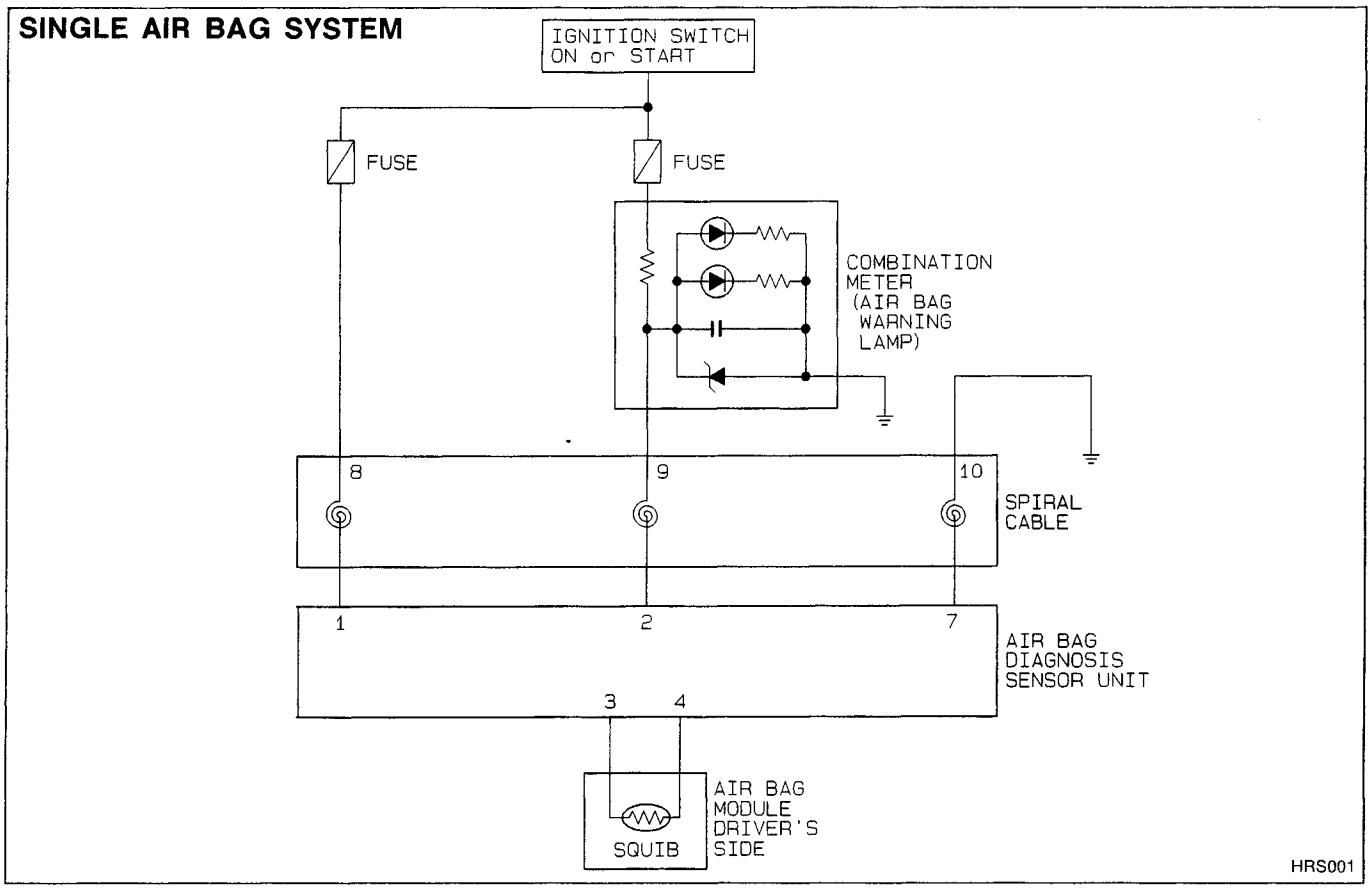

RS

Simpo PDF Merge and Split Unregistered Version - https://www.simpopdf.com

Wiring Diagram — SRS —

SINGLE AIR BAG SYSTEM

RS-SRS-01

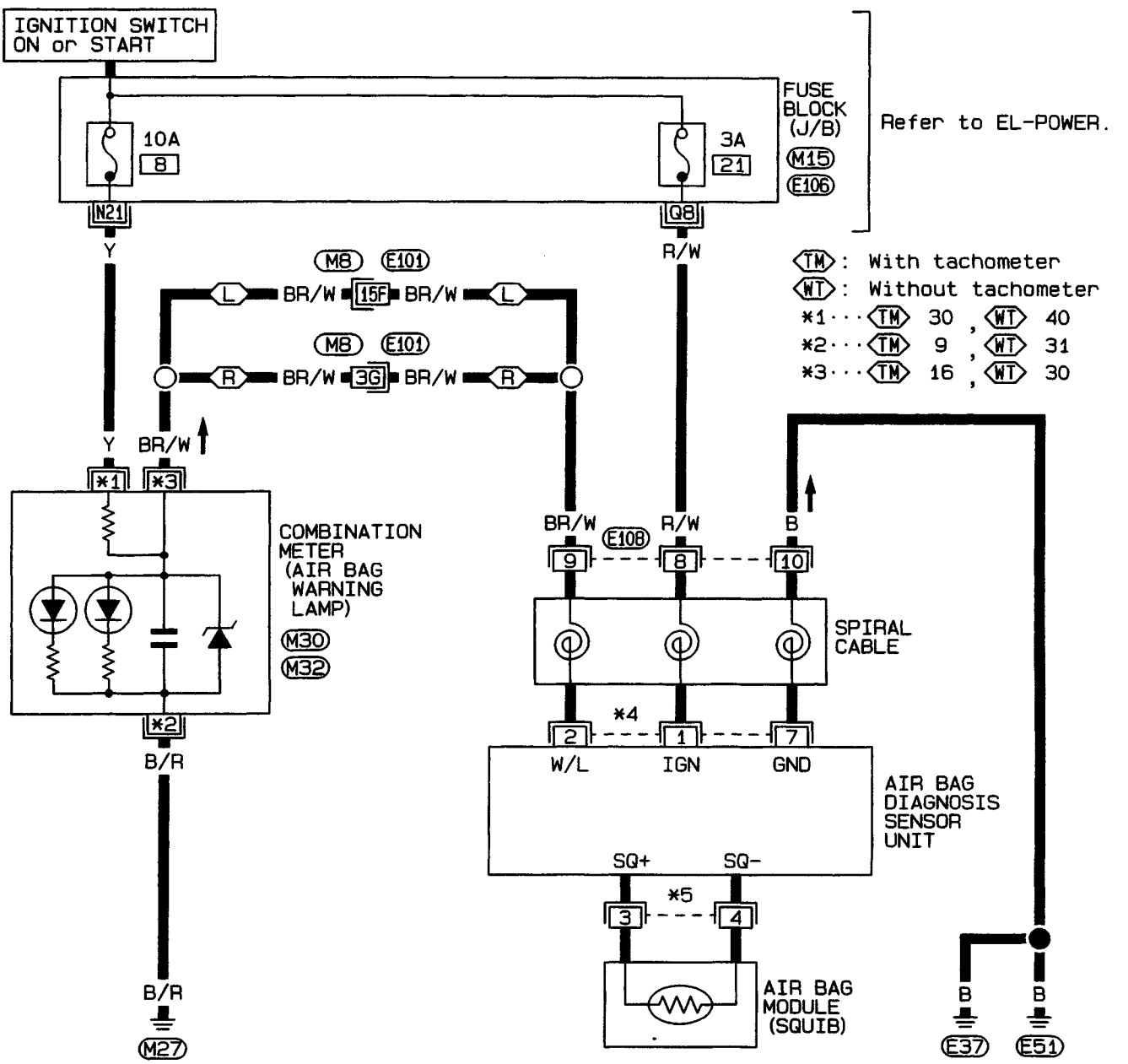

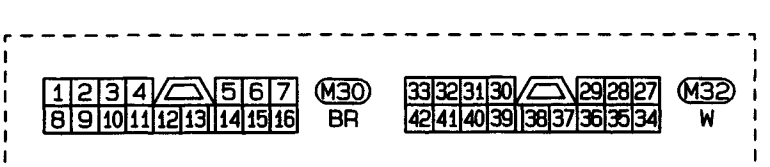

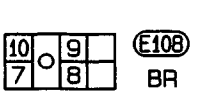

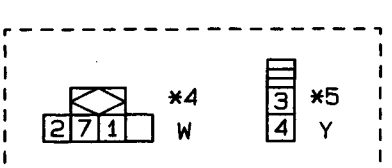

Refer to last page (Foldout page).

M8, E101

M15, E106

HRS003

Simpo PDF Merge and Split Unregistered Version - http://www.simpopdf.com

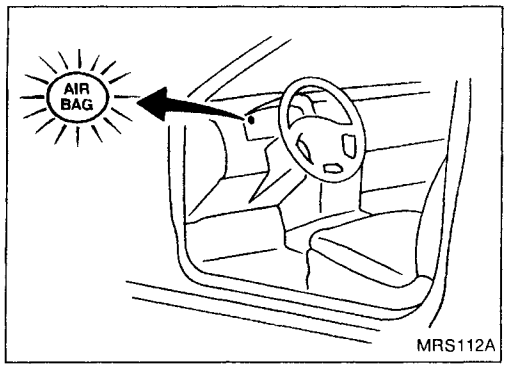

Self-diagnosis

DIAGNOSTIC PROCEDURE 7 (without CONSULT)

Checking SRS operation by using "AIR BAG" warning lamp — User mode

1. After turning ignition switch from "OFF" to "ON", "AIR BAG" warning lamp operates.
2. Compare "AIR BAG" warning lamp operation to the chart below.

Note: CONSULT cannot be used for trouble diagnoses.

"AIR BAG" warning lamp operation — User mode

1. Normal

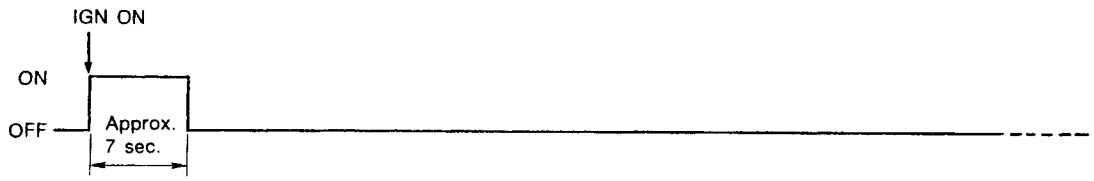

2. Abnormal — If the warning lamp shows as follows, check the SRS immediately.

- Blinking

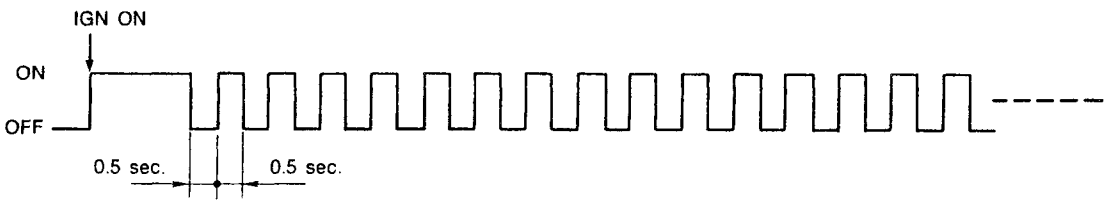

- Warning lamp does not illuminate at all.



- Continuously ON



MRS106

RS

Simpo PDF Merge and Split Unregistered Version - http://www.simpopdf.com

Self-diagnosis (Cont'd)

REPAIR PROCEDURES

CAUTION:

Before servicing air bag, turn the ignition switch off and disconnect both battery cables and wait for at least 10 minutes.

Warning lamp operation	Explanation		Repair order
Warning lamp blinks.	Air bag has not deployed.	Open or short in the air bag module circuit.	1. Visually check the wiring harness and connectors. 2. Replace air bag module. 3. Replace steering wheel assembly (including diagnosis sensor unit).
		Malfunctioning diagnosis sensor unit	
Warning lamp does not illuminate at all.	Warning lamp fuse is blown.		1. Check warning lamp fuse. 2. Visually check the wiring harnesses and connectors. 3. Check warning lamp LED. 4. Replace steering wheel assembly (including diagnosis sensor unit). 5. Replace air bag harness assembly. 6. Replace combination meter.
	Open in the warning lamp circuit		
	Malfunctioning LED		
	Malfunctioning combination meter		
	Malfunctioning diagnosis sensor unit		
Warning lamp is continuously ON.	Air bag has deployed.*		Go to COLLISION DIAGNOSIS — Single Air Bag System, page RS-45.
	SRS air bag fuse is blown.		1. Check air bag fuse. 2. Visually check the wiring harnesses and connectors for combination meter, diagnosis sensor unit and spiral cable. 3. Replace spiral cable. 4. Replace steering wheel assembly (including diagnosis sensor unit). 5. Replace air bag harness assembly.
	Open in air bag harness or spiral cable circuit		
	Malfunctioning diagnosis sensor unit		

***: After air bag is deployed, warning lamp illuminates until the ignition switch is turned OFF. When the ignition switch is turned ON again, the warning lamp illuminates for approximately 7 seconds. It then blinks if malfunction is found, or goes out when there is no malfunction.**

Follow the procedures in numerical order when repairing malfunctioning parts. Confirm whether malfunction is eliminated using the air bag warning lamp each time repair is finished. If malfunction is still observed, proceed to the next step. When malfunction is eliminated, further repair work is not required.

Simpo PDF Merge and Split Unregistered Version - http://www.simpopdf.com

To repair the SRS "AIR BAG", perform the following steps:

When SRS is activated in a collision:

① Remove the air bag module.
② Remove the steering wheel assembly.
③ Check the spiral cable using the table shown below:
- If the spiral cable shows any visible damage such as dents, cracks, or deformation, replace it with a new one.

④ Install new steering wheel assembly.
⑤ Install new air bag module.
⑥ Conduct self-diagnosis using "AIR BAG" warning lamp to ensure that entire SRS operates properly. Refer to RS-43 for details.

When SRS is not activated in a collision:

① Check the SRS components using the table shown below:
- If the SRS components show any visible damage such as dents, cracks, or deformation, replace them with new ones.

② Conduct self-diagnosis using "AIR BAG" warning lamp to ensure that entire SRS operates properly. Refer to RS-43 for details.

SRS inspection

Part	SRS is activated	SRS is NOT activated
Air bag module	REPLACE Install with new bolts.	1. Remove air bag module. Check harness cover and connectors for damage, terminals for deformities, and harness for binding. 2. Install air bag module into the steering wheel to check fit and alignment with the wheel. 3. No damage found, reinstall with new bolts. 4. If damaged—REPLACE. Air bag must be deployed before discarding.
Steering wheel assembly (including diagnosis sensor unit).	REPLACE	1. Visually check steering wheel for deformities. 2. Check harness and connectors for damage, and terminals for deformities. 3. Check diagnosis sensor unit for dents, cracks or deformities. **Do not remove diagnosis sensor unit from steering wheel.** 4. Install air bag module to check fit or alignment with steering wheel. 5. If no damage is found, reinstall the steering wheel assembly. 6. If damaged—REPLACE.
Spiral cable	1. Check spiral cable for dents, cracks or deformities. 2. Check connectors and protective tape for damage. 3. Check steering wheel for noise, binding or heavy operation. 4. If no damage is found, reinstall with new bolts. 5. If damaged—REPLACE.	
Harness and Connectors	1. Check connectors for poor connection, damage, and terminals for deformities. 2. Check harness for binding, chafing, cuts, or deformities. 3. If no damage is found, reinstall the harness and connectors. 4. Damaged—REPLACE damaged section of harness. Do not attempt to repair, splice or modify any SRS harness.	

Simpo PDF Merge and Split Unregistered Version - http://www.simpopdf.com

Before replacing "SRS" seat belt pre-tensioner, check if seat belt pre-tensioner is activated or not as follows.

Seat belt can be pulled — Seat belt pre-tensioner is not activated.

① Visually check seat belt assemblies including seat belt retractors attached hardware (i.e., guide rail set) for damage.
② If no damage is found, reinstall.
③ If damaged, install a new seat belt pre-tensioner assembly.

Seat belt cannot be pulled — Seat belt pre-tensioner is activated.

- **Replace with a new seat belt pre-tensioner assembly.**

Simpo PDF Merge and Split Unregistered Version - http://www.simpopdf.com

STEERING SYSTEM

SECTION ST

CONTENTS

PRECAUTIONS AND PREPARATION 2
Precautions 2
Special Service Tools 3
Commercial Service Tools 4
ON-VEHICLE SERVICE 5
Checking Steering Wheel Play 5
Checking Neutral Position on Steering Wheel 5
Front Wheel Turning Angle 5
Checking Gear Housing Movement 5
Checking and Adjusting Drive Belts (For power steering) 6
Checking Fluid Level 6
Checking Fluid Leakage 6
Bleeding Hydraulic System 7
Checking Steering Wheel Turning Force (For power steering) 7
Checking Hydraulic System 8
STEERING WHEEL AND STEERING COLUMN 9
Removal and Installation 9
Disassembly and Assembly 12
Inspection 13
MANUAL STEERING GEAR AND LINKAGE (Model R24N) 14
Removal and Installation 14
Disassembly 15
Inspection 15
Assembly and Adjustment 16
POWER STEERING GEAR AND LINKAGE (Model PR24AC) 19
Removal and Installation 19
Disassembly 22
Inspection 22
Assembly 23
Adjustment 27
POWER STEERING OIL PUMP 29
Pre-disassembly Inspection 30
Disassembly 30
Inspection 31
Assembly 31
POWER STEERING OIL COOLER 33
Oil Cooler (Heavy duty kit for CD20 engine model) 33
Removal and Installation 33
SERVICE DATA AND SPECIFICATIONS (SDS) 34
General Specifications 34
Inspection and Adjustment 34

Simpo PDF Merge and Split Unregistered Version - http://www.simpopdf.com

Precautions

SUPPLEMENTAL RESTRAINT SYSTEM (SRS) "AIR BAG" (Dual Air Bag System)

The Supplemental Restraint System "Air Bag" used along with a seat belt, helps to reduce the risk or severity of injury to the driver and front passenger in a frontal collision. The Supplemental Restraint System consists of air bag modules (located in the center of the steering wheel and on the instrument panel on the passenger side), a diagnosis sensor unit, warning lamp, wiring harness and spiral cable. Information necessary to service the system safely is included in the **RS section** of this Service Manual.

WARNING:

- **To avoid rendering the SRS inoperative, which could increase the risk of personal injury or death in the event of a collision which would result in air bag inflation, all maintenance must be performed by an authorized NISSAN dealer.**
- **Improper maintenance, including incorrect removal and installation of the SRS, can lead to personal injury caused by unintentional activation of the system.**
- **Do not use electrical test equipment on any circuit related to the SRS unless instructed to in this Service Manual. SRS wiring harnesses are covered with yellow insulation either just before the harness connectors or for the complete harness, for easy identification.**

SUPPLEMENTAL RESTRAINT SYSTEM (SRS) "AIR BAG" (Single Air Bag System)

The Supplemental Restraint System "Air Bag" and used along with a seat belt, helps to reduce the risk or severity of injury to the driver in a frontal collision. The Supplemental Restraint System consists of an air bag module (located in the center of the steering wheel), a diagnosis sensor unit, warning lamp, wiring harness and spiral cable. Information necessary to service the system safely is included in the **RS section** of this Service Manual.

WARNING:

- **To avoid rendering the SRS inoperative, which could increase the risk of personal injury or death in the event of a collision which would result in air bag inflation, all maintenance must be performed by an authorized NISSAN dealer.**
- **Improper maintenance, including incorrect removal and installation of the SRS, can lead to personal injury caused by unintentional activation of the system.**
- **Do not use electrical test equipment on any circuit related to the SRS unless instructed to in this Service Manual.**

STEERING SYSTEM

- **Before disassembly, thoroughly clean the outside of the unit.**
- **Disassembly should be done in a clean work area. It is important to prevent the internal parts from becoming contaminated by dirt or other foreign matter.**
- **Place disassembled parts in order, on a parts rack, for easier and proper assembly.**
- **Use nylon cloths or paper towels to clean the parts; common shop rags can leave lint that might interfere with their operation.**
- **Before inspection or reassembly, carefully clean all parts with a general purpose, non-flammable solvent.**
- **Before assembly, apply a coat of recommended ATF* to hydraulic parts. Vaseline may be applied to O-rings and seals. Do not use any grease.**
- **Replace all gaskets, seals and O-rings. Avoid damaging O-rings, seals and gaskets during installation. Perform functional tests whenever designated.**
  ***: Automatic transmission fluid**

Simpo PDF Merge and Split Unregistered Version - http://www.simpopdf.com

Special Service Tools

Tool number Tool name	Description	
KV48100700 Torque adapter	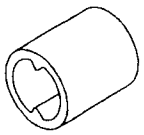 NT169	Measuring pinion rotating torque
KV48102500 Pressure gauge adapter	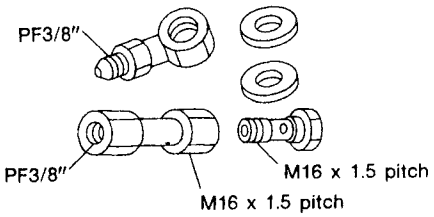 NT542	Measuring oil pressure
ST27180001 Steering wheel puller	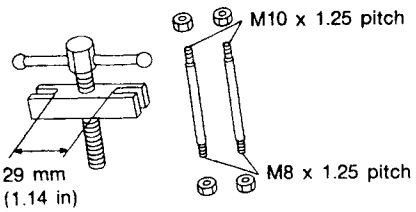 NT544	Removing and installing steering wheel
HT72520000 Ball joint remover	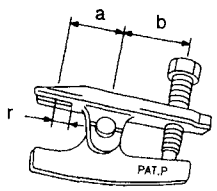 NT546	Removing ball joint **a: 33 mm (1.30 in)** **b: 50 mm (1.97 in)** **r: R11.5 mm (0.453 in)**
ST27091000 Pressure gauge	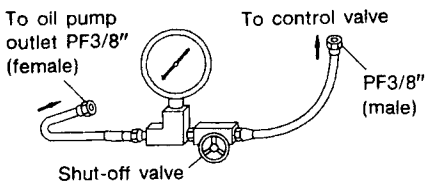 NT547	Measuring oil pressure
KV48104400 Rack seal ring reformer	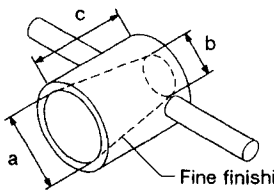 NT550	Reforming teflon ring **a: 50 mm (1.97 in) dia.** **b: 36 mm (1.42 in) dia.** **c: 100 mm (3.94 in)**
ST3127S000 ① GG91030000 Torque wrench ② HT62940000 Socket adapter ③ HT62900000 Socket adapter	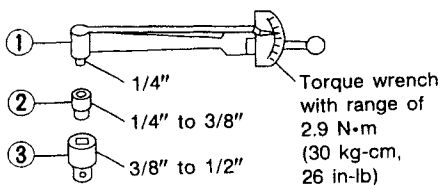 NT541	Measuring turning torque

ST

Simpo PDF Merge and Split Unregistered Version - http://www.simpopdf.com

Commercial Service Tools

Tool name	Description	
Rear oil seal drift	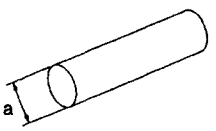 NT063	Installing rear oil seal **a : 28 mm (1.10 in) dia.**
Pinion oil seal drift	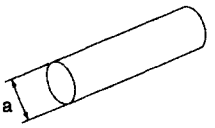 NT063	Installing pinion oil seal **a : 35 mm (1.38 in) dia.**
Oil pump attachment	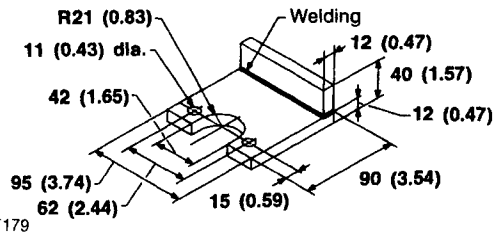 NT179	Disassembling and assembling oil pump Unit: mm (in)

Simpo PDF Merge and Split Unregistered Version - http://www.simpopdf.com

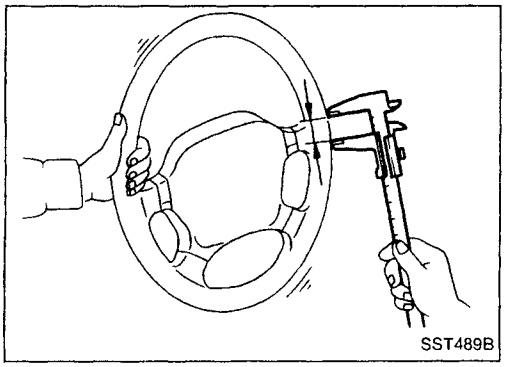
SST489B

Checking Steering Wheel Play

- With wheels in a straight-ahead position, check steering wheel play.
  Steering wheel play:
  35 mm (1.38 in) or less
- If it is not within specification, check the following for loose or worn components.
  Steering gear assembly
  Steering column
  Front suspension and axle

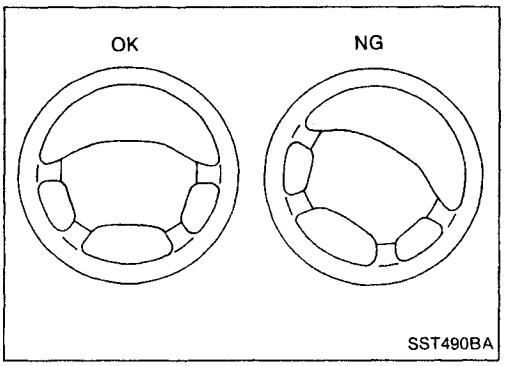

SST490BA

Checking Neutral Position on Steering Wheel

Pre-checking

- Make sure that wheel alignment is correct.
  Wheel alignment:
  Refer to SDS in FA section.
- Verify that the steering gear is centered before removing the steering wheel.

Checking

1. Check that the steering wheel is in the neutral position when driving straight ahead.
2. If it is not in the neutral position, remove the steering wheel and reinstall it correctly.
3. If the neutral position is between two teeth, loosen tie-rod lock nuts. Turn the tie-rods by the same amount in opposite directions on both left and right sides.

ST

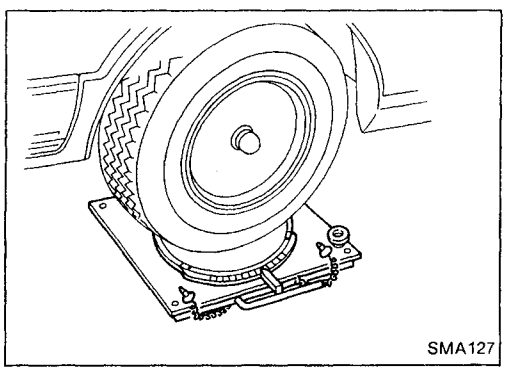
SMA127

Front Wheel Turning Angle

1. Rotate steering wheel all the way right and left; measure turning angle.
   Turning angle of full turns:
   Refer to SDS in FA section.
2. If it is not within specification, check rack stroke.
   Rack stroke "S":
   Refer to SDS (ST-35).

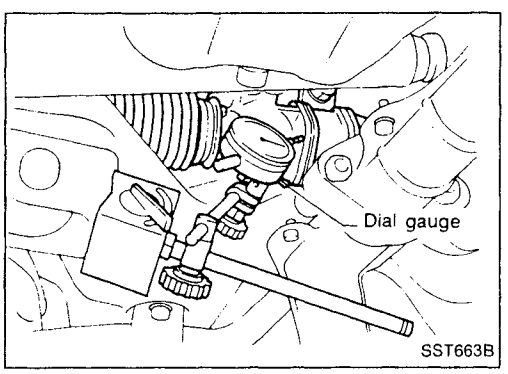

SST663B

Checking Gear Housing Movement

1. Check the movement of steering gear housing during stationary steering on a dry paved surface.
- Apply a force of 49 N (5 kg, 11 lb) to steering wheel to check the gear housing movement.
  Turn off ignition key while checking.
  Movement of gear housing:
  ±2 mm (±0.08 in) or less
2. If movement exceeds the limit, replace mount insulator after confirming proper installation of gear housing clamps.

Simpo PDF Merge and Split Unregistered Version - http://www.simpopdf.com

Checking and Adjusting Drive Belts (For power steering)

Refer to "Checking Drive Belts" for "ENGINE MAINTENANCE" in MA section.

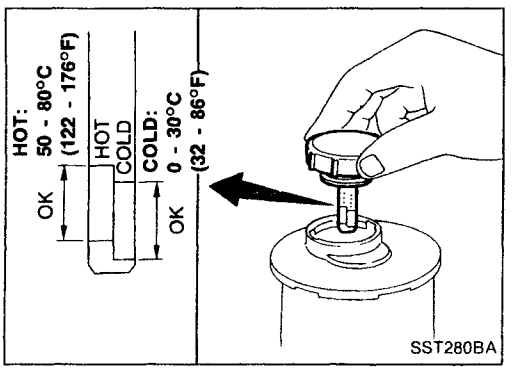

Checking Fluid Level

Check fluid level using dipstick on reservoir cap, or referring to the scale on reservoir tank.

Use "HOT" range for fluid temperatures of 50 to 80°C (122 to 176°F).

Use "COLD" range for fluid temperatures of 0 to 30°C (32 to 86°F).

CAUTION:

- **Do not overfill.**
- **Recommended fluid is Automatic Transmission Fluid "DEXRON™" type or equivalent.**

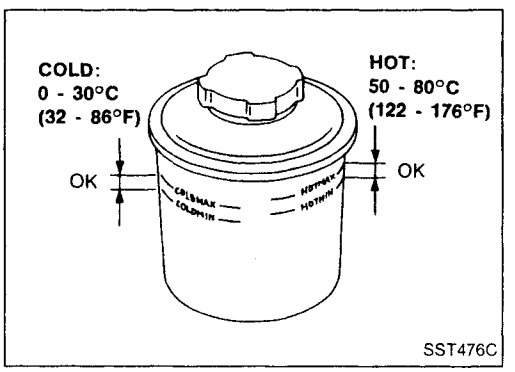

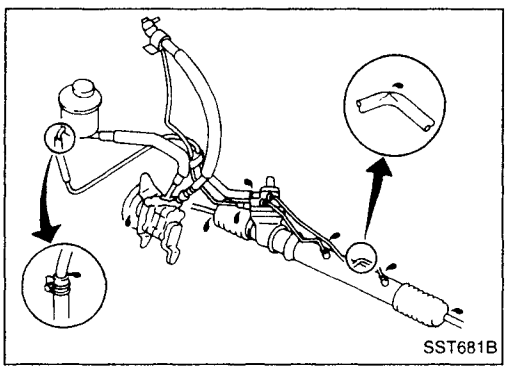

Checking Fluid Leakage

Check the lines for improper attachment and for leaks, cracks, damage, loose connections, chafing or deterioration.

1. Run engine between idle speed and 1,000 rpm.

Make sure temperature of fluid in oil tank rises to 60 to 80°C (140 to 176°F).

2. Turn steering wheel right-to-left several times.
3. Hold steering wheel at each "lock" position for five seconds and carefully check for fluid leakage.

CAUTION:

Do not hold the steering wheel in a locked position for more than 15 seconds.

4. If fluid leakage at connectors is noticed, loosen flare nut and then retighten.

Do not overtighten connector as this can damage O-ring, washer and connector.

5. Check rack boots for accumulation of power steering fluid.

Simpo PDF Merge and Split Unregistered Version - http://www.simpopdf.com

Bleeding Hydraulic System

1. Raise front end of vehicle until wheels are clear of the ground.
2. Add fluid into oil tank to specified level. Then quickly turn steering wheel fully to right and left and lightly touch steering stoppers.
   Repeat steering wheel operation until fluid level no longer decreases.
3. Start engine.
   Repeat step 2. above.

- Incomplete air bleeding will cause the following to occur. When this happens, bleed air again.

a. Air bubbles in reservoir tank
b. Clicking noise in oil pump
c. Excessive buzzing in oil pump

Fluid noise may occur in the valve or oil pump. This is common when the vehicle is stationary or while turning the steering wheel slowly. This does not affect the performance or durability of the system.

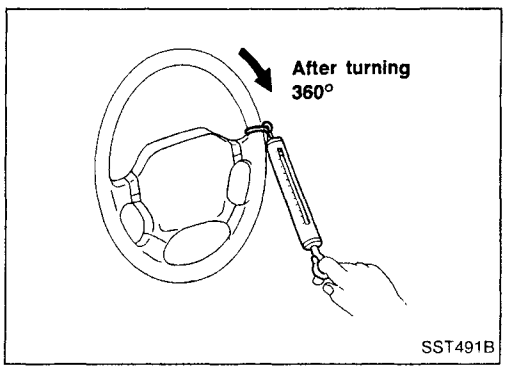

SST491B

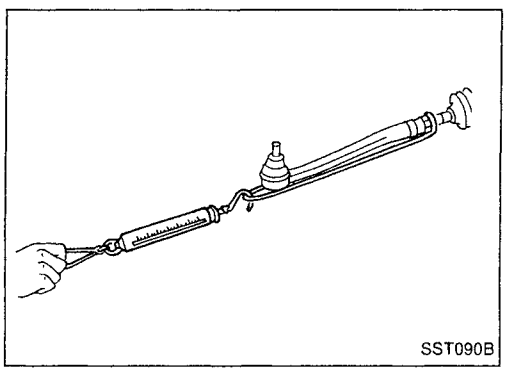
SST090B

Checking Steering Wheel Turning Force (For power steering)

1. Park vehicle on a level, dry surface and set parking brake.
2. Start engine.
3. Bring power steering fluid up to adequate operating temperature. [Make sure temperature of fluid is approximately 60 to 80°C (140 to 176°F).]

Tires need to be inflated to normal pressure.

4. Check steering wheel turning force when steering wheel has been turned 360° from the neutral position.
   Steering wheel turning force:
   39 N (4 kg, 9 lb) or less
5. If steering wheel turning force is out of specification, check rack sliding force.

a. Disconnect steering column lower joint and knuckle arms from the gear.
b. Start and run engine at idle to make sure steering fluid has reached normal operating temperature.
c. Pull tie-rod slowly to move it from neutral position to ±11.5 mm (±0.453 in) at speed of 3.5 mm (0.138 in)/s. Check that rack sliding force is within specification.
   Average rack sliding force:
   152.0 - 240.3 N (15.5 - 24.5 kg, 34.2 - 54.0 lb)
   Maximum force deviation:
   98 N (10 kg, 22 lb)

6. If rack sliding force is not within specification, overhaul steering gear assembly.
7. If rack sliding force is OK, inspect steering column. Refer to ST-13.

ST

Simpo PDF Merge and Split Unregistered Version - http://www.simpopdf.com

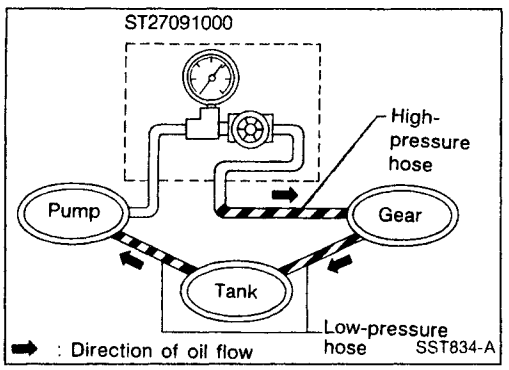

Checking Hydraulic System

Before starting, check belt tension, driving pulley and tire pressure.

1. Set Tool. Open shut-off valve. Then bleed air. (See "Bleeding Hydraulic System" ST-7.)
2. Run engine.

Make sure temperature of fluid in tank rises to 60 to 80°C (140 to 176°F).

WARNING:

Warm up engine with shut-off valve fully opened. If engine is started with shut-off valve closed, fluid pressure in oil pump increases to maximum. This will raise oil temperature abnormally.

3. Check pressure with steering wheel fully turned to left and right positions with engine idling at 1,000 rpm.

CAUTION:

Do not hold the steering wheel in a locked position for more than 15 seconds.

Oil pump maximum standard pressure:
7,649 - 8,238 kPa (76.5 - 82.4 bar, 78 - 84 kg/cm^2, 1,109 - 1,194 psi)

4. If oil pressure is below the standard pressure, slowly close shut-off valve and check pressure.

- When pressure reaches standard pressure, gear is damaged.
- When pressure remains below standard pressure, pump is damaged.

CAUTION:

Do not close shut-off valve for more than 15 seconds.

5. If oil pressure is higher than standard pressure, check oil pump flow control valve.
6. After checking hydraulic system, remove Tool and add fluid as necessary. Then completely bleed air out of system.

Simpo PDF Merge and Split Unregistered Version - http://www.simpopdf.com

Removal and Installation

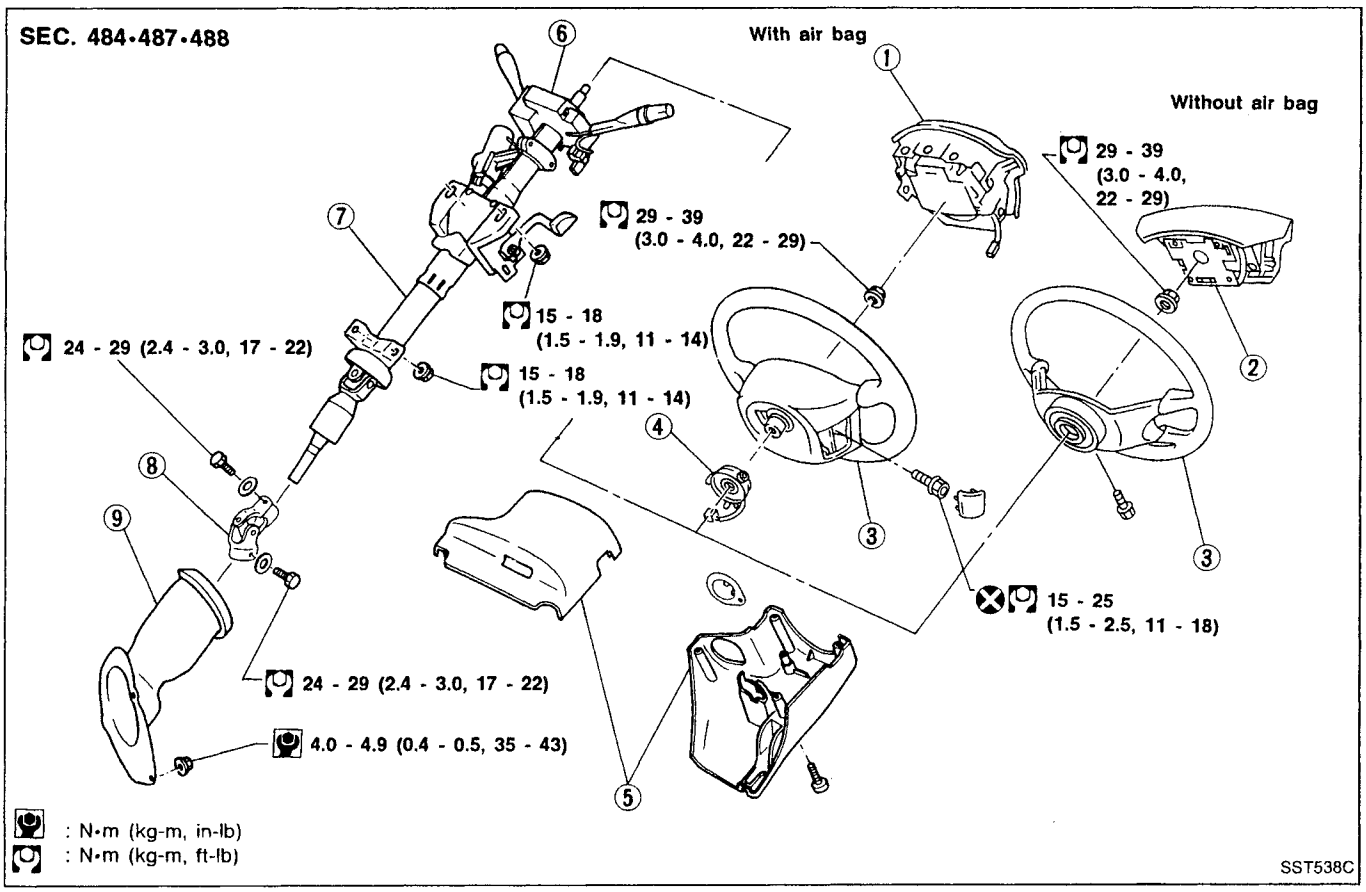

① Air bag module
② Horn pad
③ Steering wheel
④ Spiral cable
⑤ Column cover
⑥ Combination switch
⑦ Steering column assembly
⑧ Lower joint
⑨ Boot

CAUTION (SRS models only):

- **The rotation of the spiral cable (SRS "Air bag" component part) is limited. If the steering gear must be removed, set the front wheels in the straight-ahead direction. Do not rotate the steering column while the steering gear is removed.**
- **Remove the steering wheel before removing the steering lower joint to avoid damaging the SRS spiral cable.**

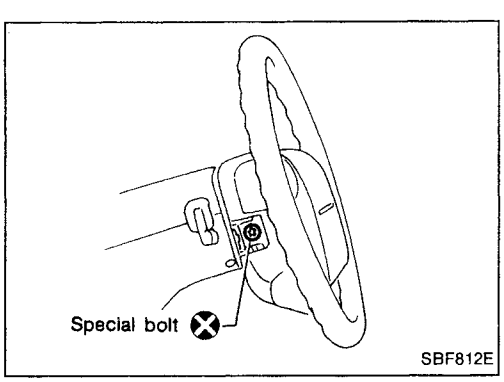

STEERING WHEEL

With Air Bag

- Remove air bag module and spiral cable.
  Refer to "Removal — Air Bag Module and Spiral Cable", "SUPPLEMENTAL RESTRAINT SYSTEM" in RS section.

Simpo PDF Merge and Split Unregistered Version - http://www.simpopdf.com

Removal and Installation (Cont'd)

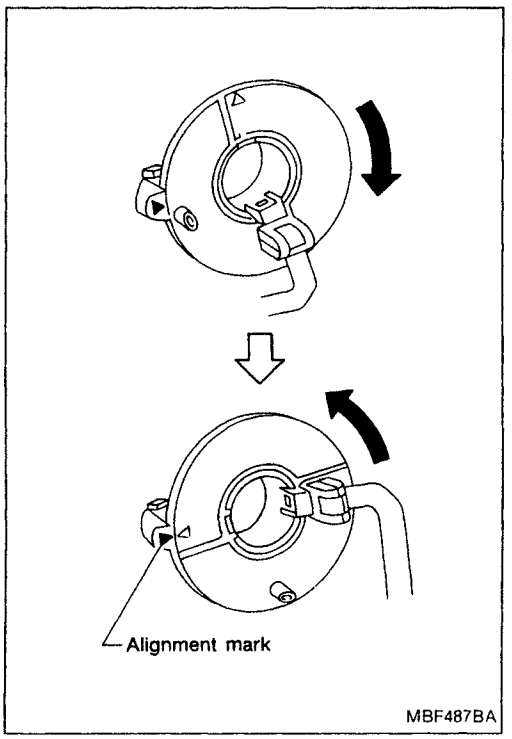

- Align spiral cable correctly when installing steering wheel.

a. Set the front wheels in the straight-ahead position.

b. Make sure that the spiral cable is in the neutral position.
The neutral position is detected by turning left 2.5 revolutions from the right end position. Align the two marks (⧖).

CAUTION:
The spiral cable may snap due to steering operation if the cable is installed in an improper position.
Also, with the steering linkage disconnected, the cable may snap by turning the steering wheel beyond the limited number of turns. (The spiral cable can be turned up to 2.5 turns from the neutral position to both the right and left.)

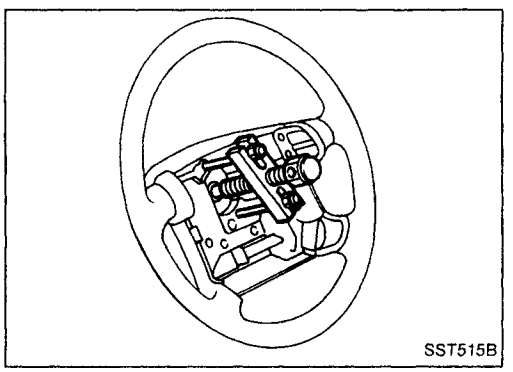

- Remove steering wheel with Tool.

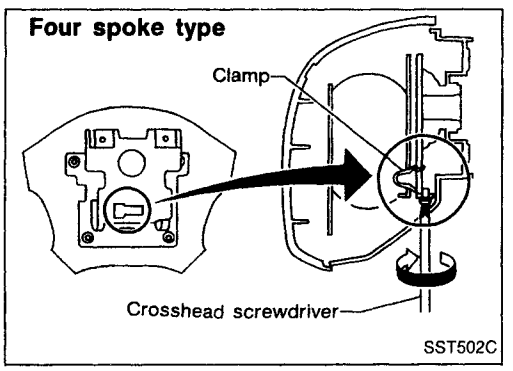

Without Air Bag

1. Remove horn pad.
Insert a crosshead screwdriver into hole on lower side of spoke and remove clamp.
Lift horn pad off by hand.

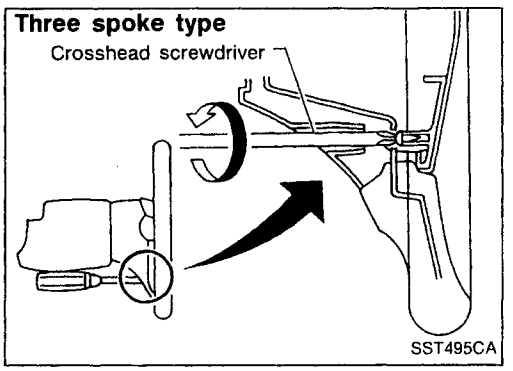

Simpo PDF Merge and Split Unregistered Version - http://www.simpopdf.com

Removal and Installation (Cont'd)

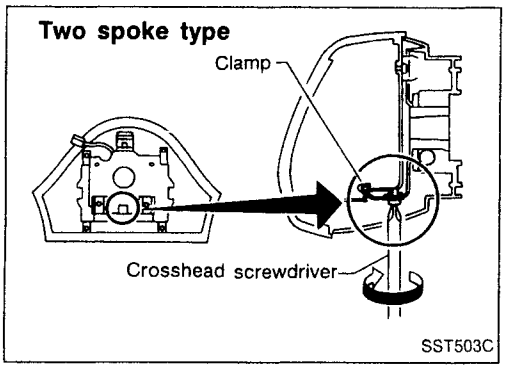

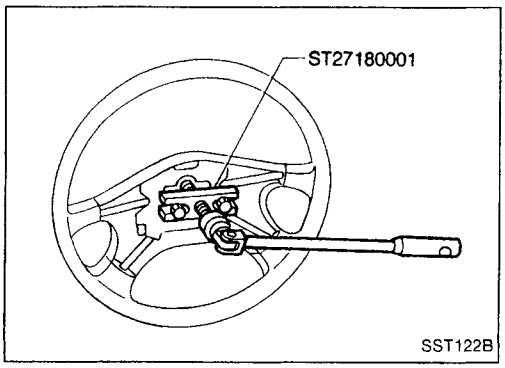

2. Remove steering wheel with Tool.

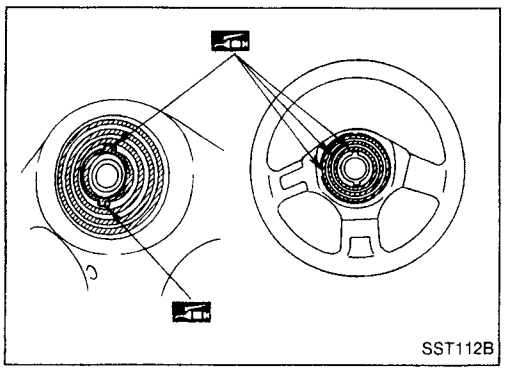

- When installing steering wheel, lubricate with multi-purpose grease. Apply grease to entire surface of turn signal cancel pins and horn contact slip rings.

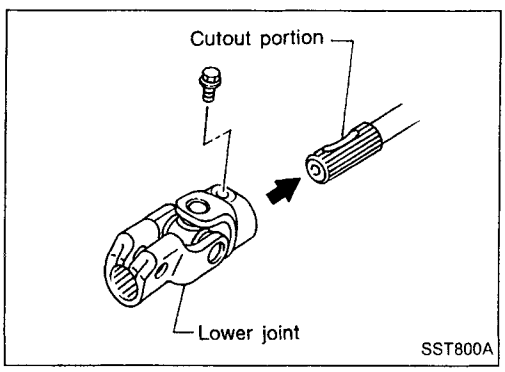

STEERING COLUMN

- When installing steering column, fingertighten all lower bracket and clamp retaining bolts; then tighten them securely. Do not apply undue stress to steering column.
- When attaching coupling joint, be sure tightening bolt faces cutout portion.

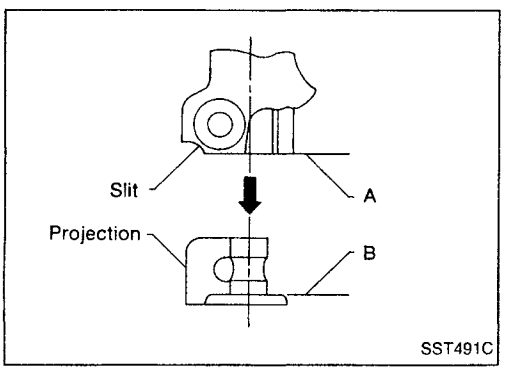

- Align slit of lower joint with projection on dust cover. Insert joint until surface A contacts surface B.

CAUTION:
After installation, turn steering wheel to make sure it moves smoothly. Ensure the number of turns are the same from the straight forward position to left and right locks. Be sure that the steering wheel is in a neutral position when driving straight ahead.

ST

Simpo PDF Merge and Split Unregistered Version - http://www.simpopdf.com

Disassembly and Assembly

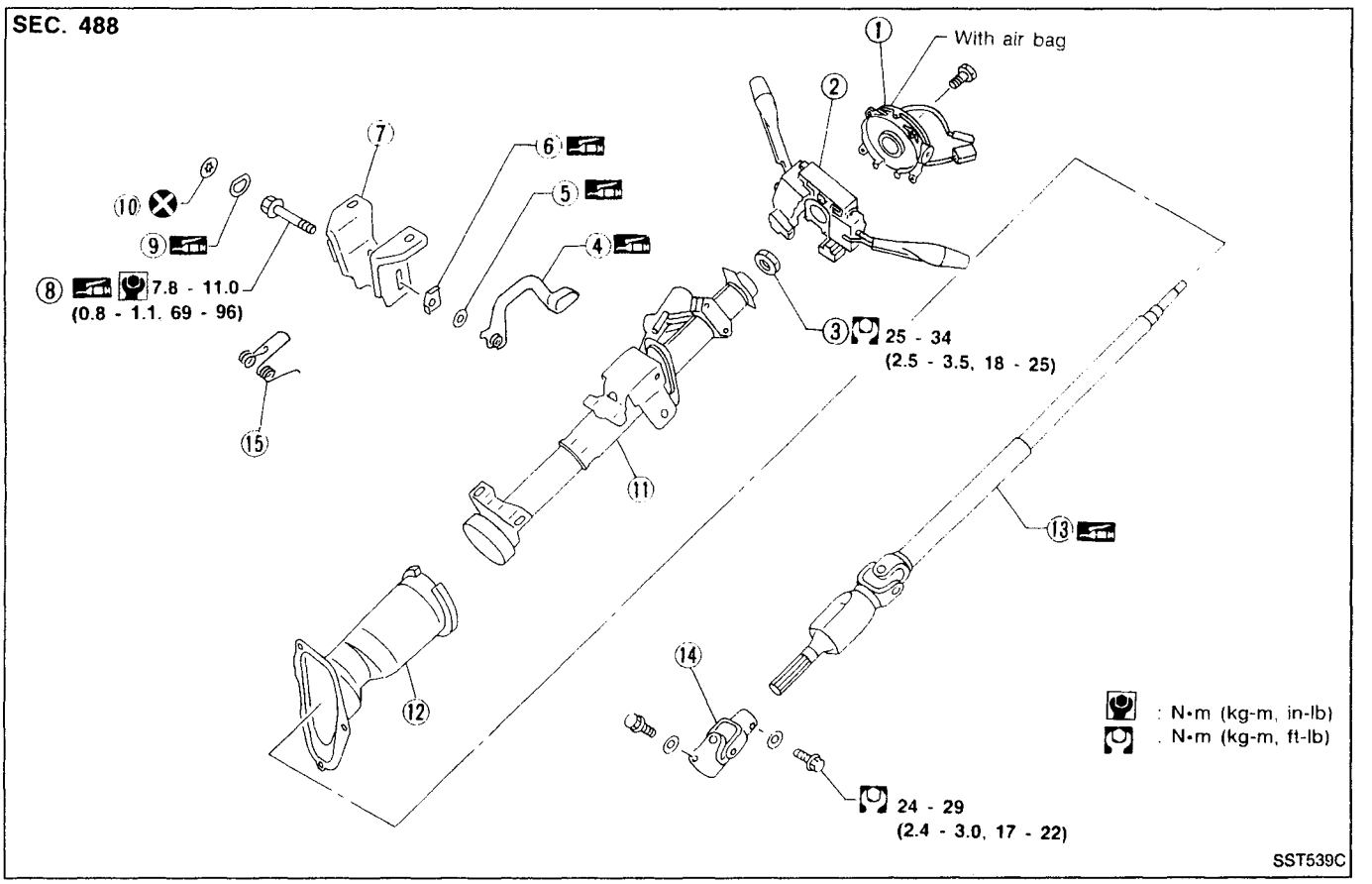

① Spiral cable
② Combination switch
③ Lock nut
④ Tilt lever
⑤ Washer
⑥ Tilt lever stopper
⑦ Steering column mounting bracket
⑧ Adjust bolt
⑨ Adjust bolt stopper
⑩ Push nut
⑪ Jacket tube assembly
⑫ Boot
⑬ Steering column shaft
⑭ Lower joint
⑮ Return spring

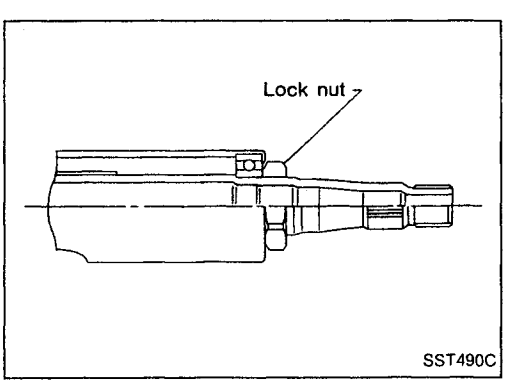

- When disassembling and assembling, unlock steering lock with key.
- Install lock nut on steering column shaft and tighten the nut to specification.

: 25 - 34 N·m (2.5 - 3.5 kg-m, 18 - 25 ft-lb)

Simpo PDF Merge and Split Unregistered Version - http://www.simpopdf.com

Disassembly and Assembly (Cont'd)

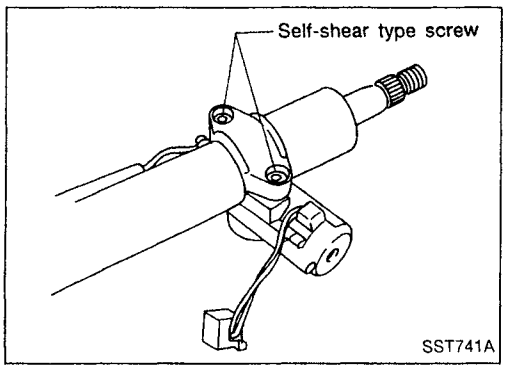

- Steering lock

a. Break self-shear type screws with a drill or other appropriate tool.

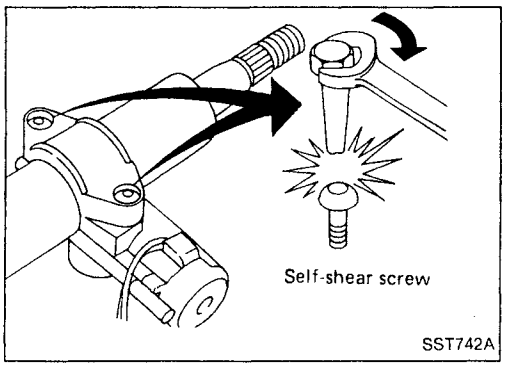

b. Install new self-shear type screws and then cut off self-shear type screw heads.

Inspection

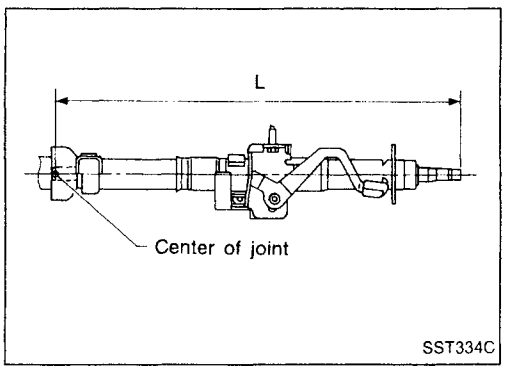

- When steering wheel does not turn smoothly, check the steering column as follows and replace damaged parts.

a. Check column bearings for damage or unevenness. Lubricate with recommended multi-purpose grease or replace steering column as an assembly, if necessary.

b. Check jacket tube for deformation or breakage. Replace if necessary.

- When the vehicle comes into a light collision, check length "L".

Column length "L":
533.0 - 535.0 mm (20.98 - 21.06 in)

If out of the specifications, replace steering column as an assembly.

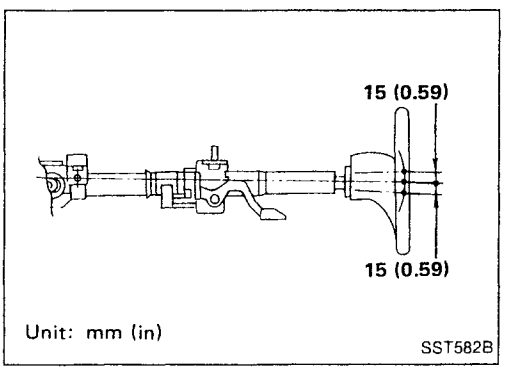

Tilt mechanism

- After installing steering column, check tilt mechanism operation.

Simpo PDF Merge and Split Unregistered Version - http://www.simpopdf.com

Removal and Installation

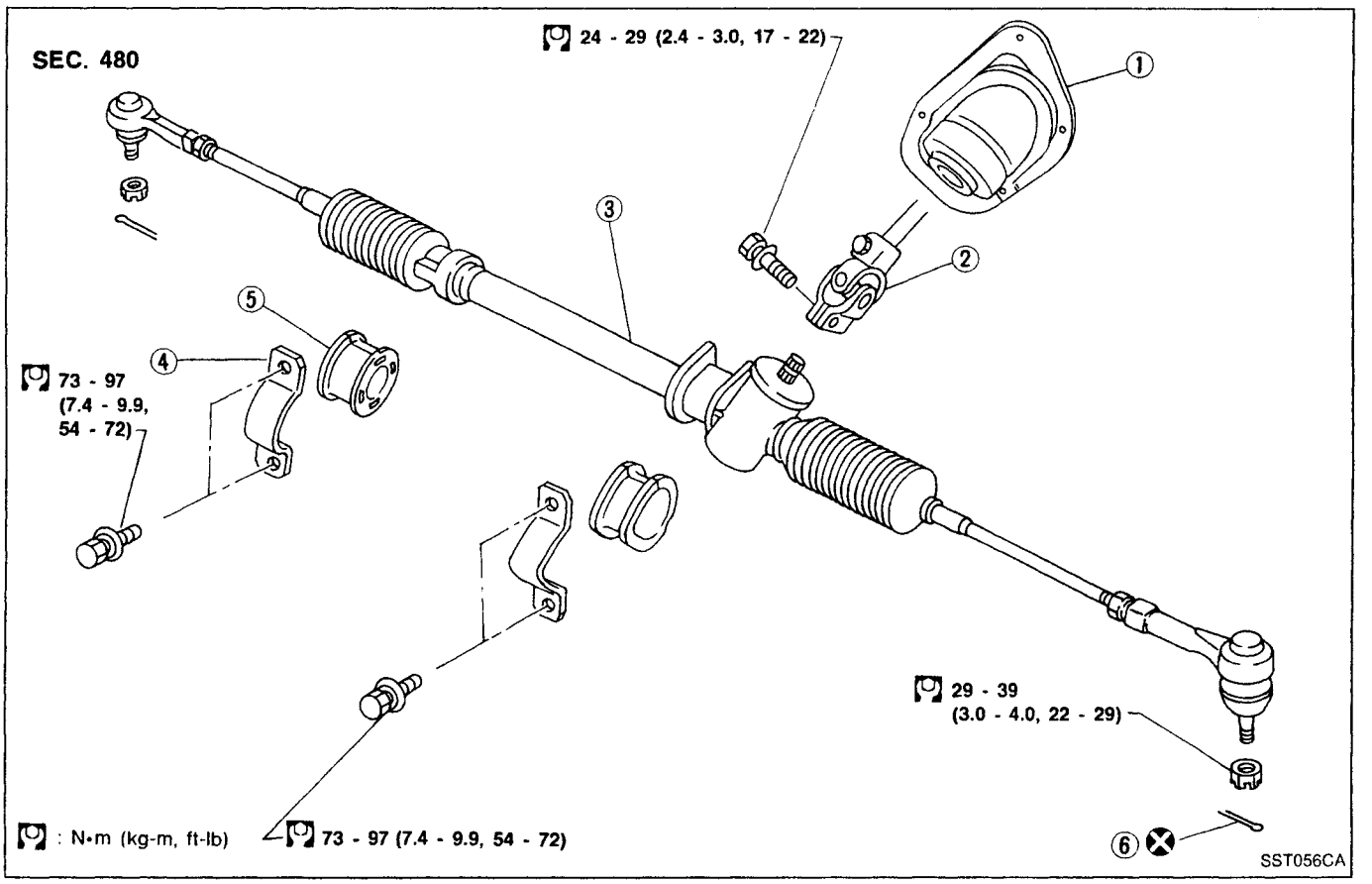

① Hole cover
② Lower joint
③ Manual steering gear assembly
④ Steering gear mounting clamp
⑤ Rack mounting insulator
⑥ Cotter pin

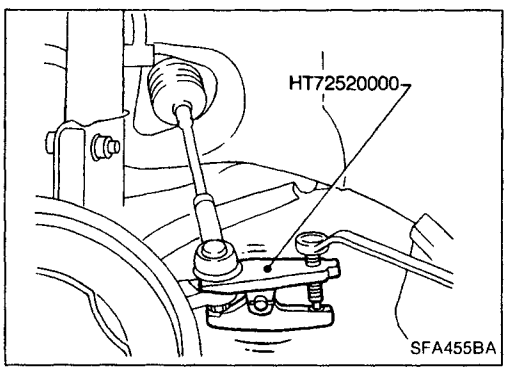

CAUTION:
The rotation of the spiral cable (SRS "Airbag" component part) is limited. If the steering gear must be removed, set the front wheels in the straight-ahead direction. Do not rotate the steering column while the steering gear is removed.

- Detach tie-rod outer sockets from knuckle arms with Tool.

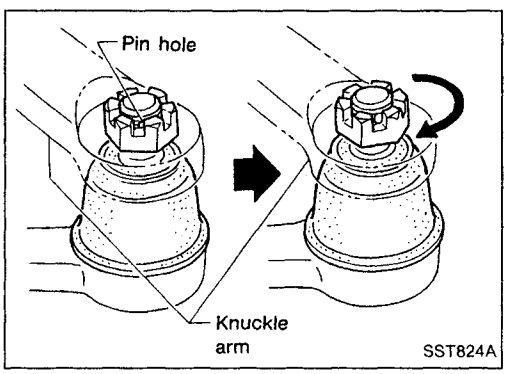

- Initially, tighten nut on tie-rod outer socket and knuckle arm to 29 to 39 N·m (3 to 4 kg-m, 22 to 29 ft-lb).
- Tighten nut further to align nut groove with the first pin hole so cotter pin can be installed.

CAUTION:
Tightening torque must not exceed 49 N·m (5 kg-m, 36 ft-lb).

Simpo PDF Merge and Split Unregistered Version - http://www.simpopdf.com

Disassembly

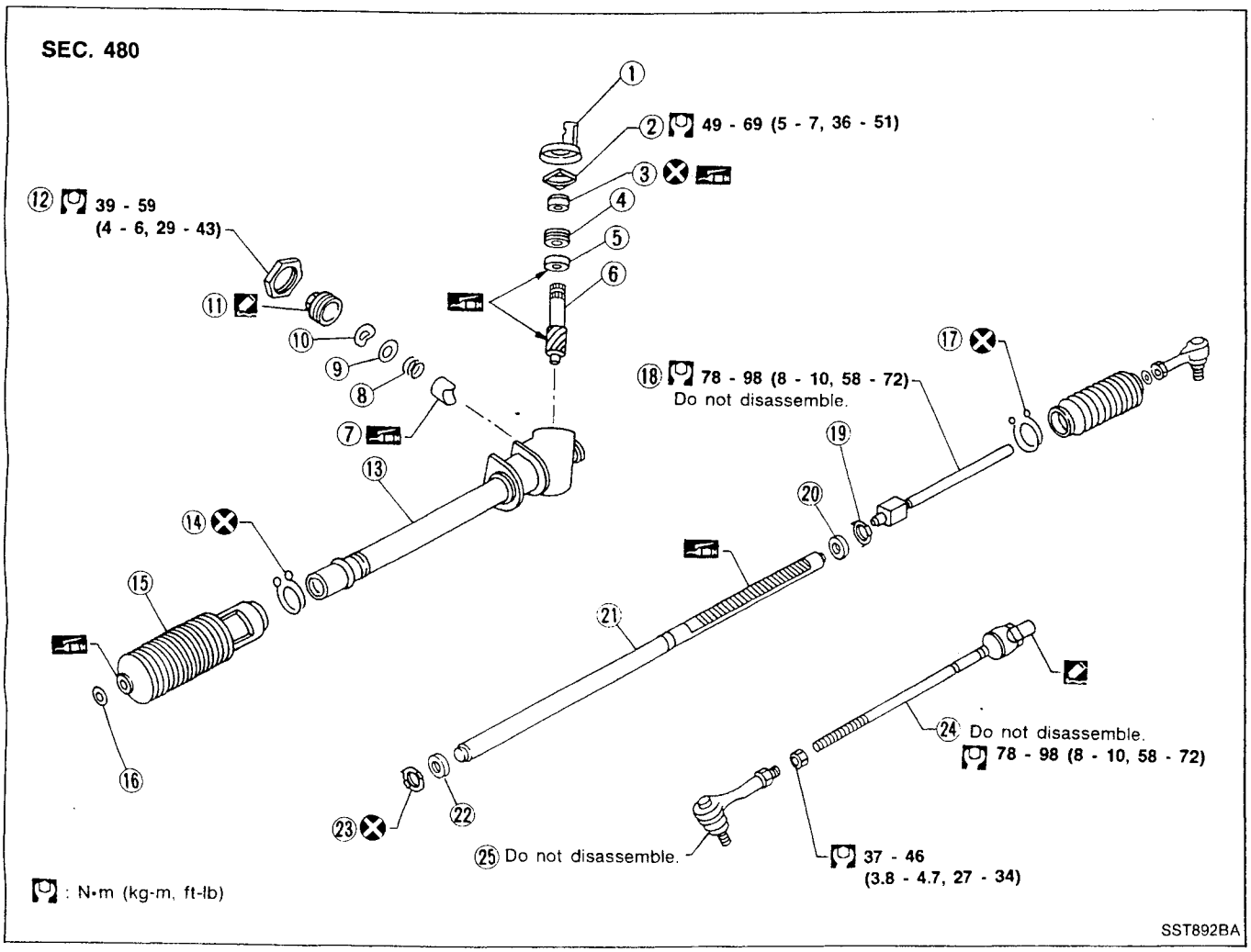

① Guide chip
② Rear cover lock nut
③ Dust seal
④ Rear cover
⑤ Pinion bearing
⑥ Pinion assembly
⑦ Retainer
⑧ Retaining spring
⑨ Plain washer
⑩ Wave washer
⑪ Adjusting screw
⑫ Adjusting lock nut
⑬ Gear housing assembly
⑭ Boot clamp
⑮ Boot
⑯ Boot band
⑰ Boot clamp
⑱ Tie-rod inner socket
⑲ Lock plate
⑳ Spacer
㉑ Rack
㉒ Spacer
㉓ Lock plate
㉔ Tie-rod inner socket
㉕ Tie-rod outer socket

ST

Inspection

BOOT

Check condition of boot. If it is cracked excessively, replace it.

RACK

Thoroughly examine rack gear. If rack gear is damaged, cracked or worn, replace.

PINION ASSEMBLY

- Thoroughly examine pinion gear. If pinion gear is damaged, cracked or worn, replace.
- Check that all bearings roll freely. Ensure that balls, rollers and races in the bearing assemblies are not cracked, pitted or worn. Replace if necessary.

Simpo PDF Merge and Split Unregistered Version - http://www.simpopdf.com

Inspection (Cont'd)

TIE-ROD OUTER AND INNER SOCKETS

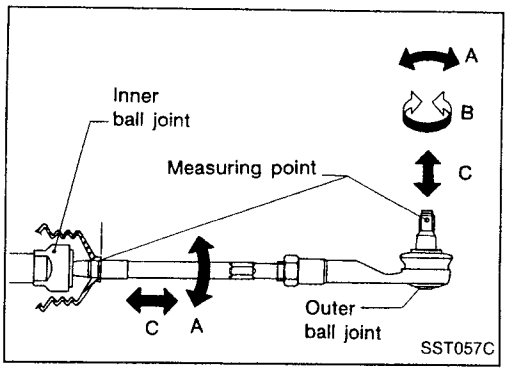

- Check outer and inner ball joints for swinging force "A" and axial end play "C".
  Refer to SDS (ST-35).
- Check outer ball joint for rotating torque "B".
  Refer to SDS (ST-35).
- Check condition of dust cover. If excessively cracked, replace it.

Assembly and Adjustment

STEERING GEAR

1. Insert rack gear from gear housing side.
2. Set rack gear in neutral position.

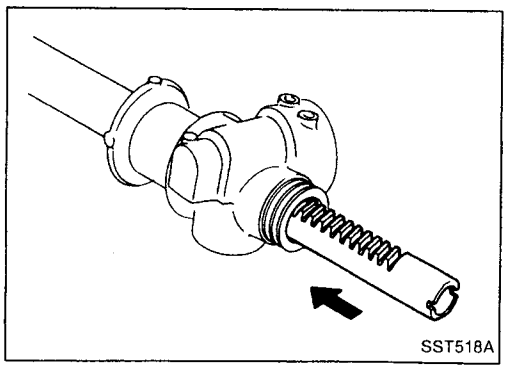

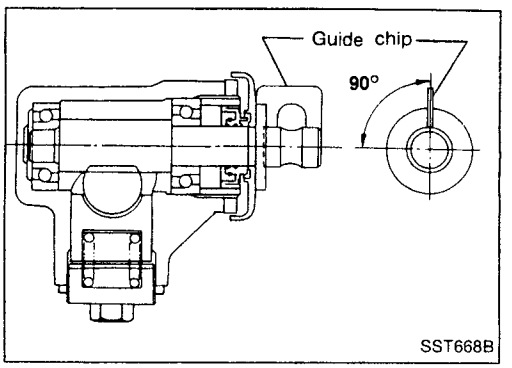

3. Insert pinion assembly, then set guide chip at neutral position as shown in figure. Pinion rack gear should be held in place.

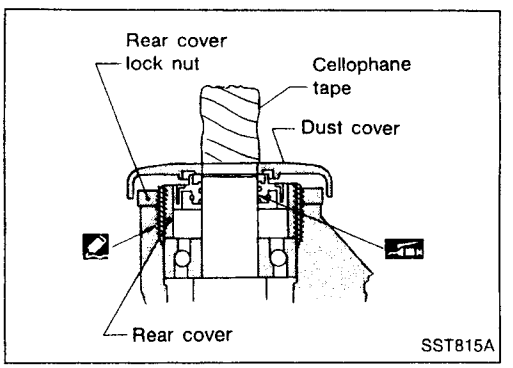

4. Install rear cover with Tool and secure with lock nut.
   Tool number: KV48102000
- **Before installing rear cover, apply locking sealant to threaded areas. Do not allow sealant to get into pinion bearing.**
- **Apply a coat of multi-purpose grease to sealing lips of dust seal.**

CAUTION:
Wrap cellophane tape around pinion gear end when installing dust seal.

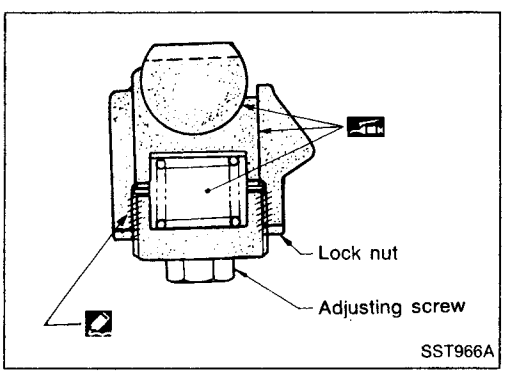

5. Insert retainer, spring, plain washer and wave washer. Then, install adjusting screw.
- Apply a coat of locking sealant to threaded areas of retainer cover.

Simpo PDF Merge and Split Unregistered Version - http://www.simpopdf.com

Assembly and Adjustment (Cont'd)

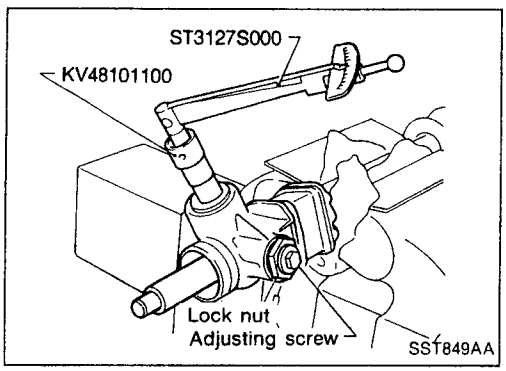

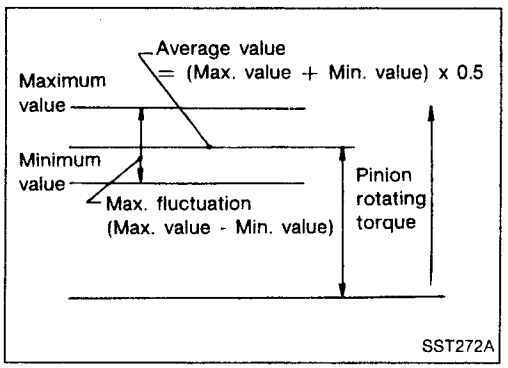

6. Adjust pinion rotating torque as follows:
a. Set gears to neutral position.
b. Loosen lock nut.
c. Tighten adjusting screw to a torque of 9.8 N·m (100 kg-cm, 87 in-lb).
d. Loosen adjusting screw and retighten it to a torque of 9.8 N·m (100 kg-cm, 87 in-lb).
e. Loosen adjusting screw within 60° until specified pinion torque is obtained. Ensure that pinion-to-rack play is less than 0.1 mm (0.004 in) when 15 N·m (1.5 kg-m, 11 ft-lb) torque is applied to pinion.
f. Prevent adjusting nut from rotating and tighten lock nut to specified torque 39 to 59 N·m (4 to 6 kg-m, 29 to 43 ft-lb) holding adjusting screw in place.
g. While slowly rotating pinion in the ±100° range from neutral position, make sure its rotating torque is within the specifications.

Within ±100° from the neutral position:
Average rotating torque
0.7 - 1.2 N·m (7 - 12 kg-cm, 6.1 - 10.4 in-lb)
Maximum torque deviation
0.3 N·m (3 kg-cm, 2.6 in-lb)
Except for above measuring range:
Maximum rotating torque
1.5 N·m (15 kg-cm, 13 in-lb)
Maximum force deviation
0.5 N·m (5 kg-cm, 4.3 in-lb)

h. If pinion rotating torque is not within the specifications, readjust.

If pinion rotating torque is outside the specifications after adjustment has been made, replace retainer spring.
If pinion rotating torque is still out of specifications after replacing retainer spring, replace gear assembly.

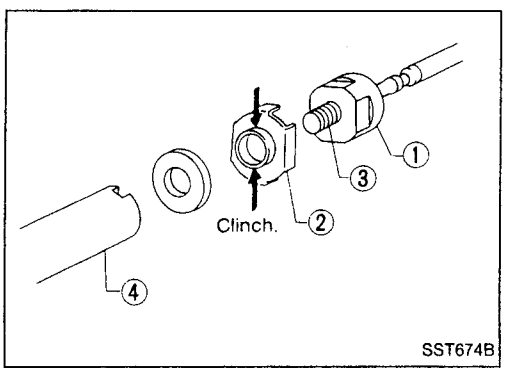

7. Install new lock plate.
- Attach lock plate ② to side rod inner socket ①.
- Apply locking sealant to inner socket threads ③. Screw inner socket into rack ④ and tighten to specified torque.
- Clinch two places of lock plate at rack's groove.

CAUTION:
To prevent scratching the boot, remove burrs from lock plate.

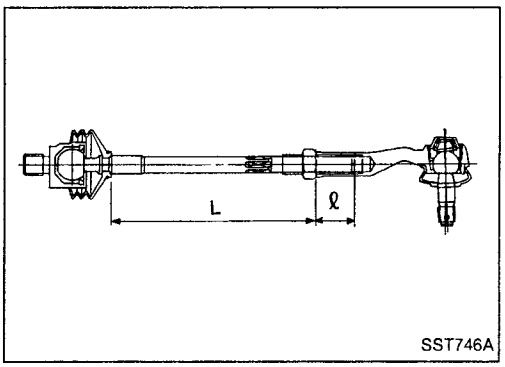

TIE-ROD AND BOOT

1. Install boot on tie-rod inner socket.
2. Apply locking sealant to threaded portion of inner socket. Install tie-rod inner socket to rack end together with new lock plate.
3. Install lock nut and outer socket to inner socket. Adjust tie-rod length "L" and tighten lock nut.

Tie-rod length "L": Refer to SDS (ST-35).
Screwed length "ℓ": 32 mm (1.26 in) or more

Simpo PDF Merge and Split Unregistered Version - http://www.simpopdf.com

Assembly and Adjustment (Cont'd)

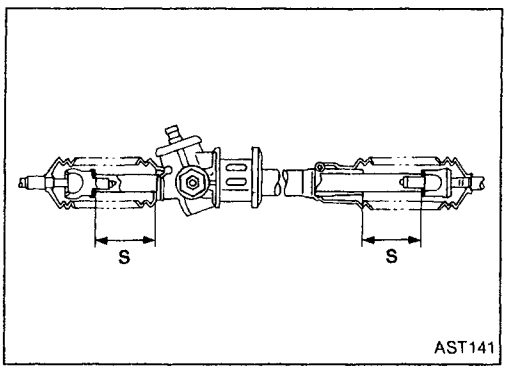

4. Measure rack stroke.
   Measure stroke "S":
   Refer to SDS (ST-35).

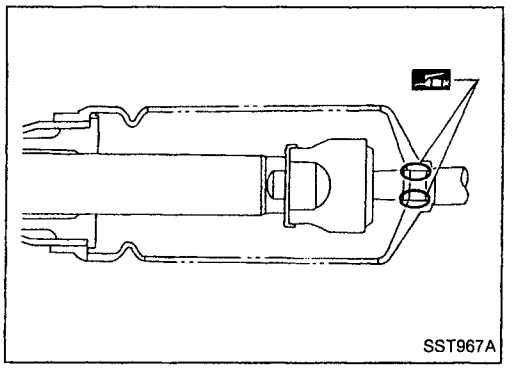

5. Before installing boot, coat the contact surfaces between boot and tie-rod with grease.

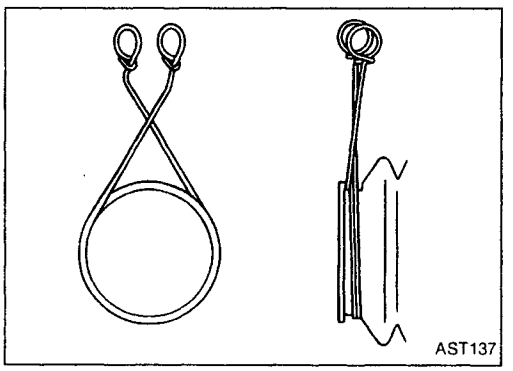

6. Install boot clamps.
- To install, wrap boot clamp around boot groove twice. Use a screwdriver to tighten clamps. Twist rings at both ends 4 to 4-1/2 turns while pulling them with a force of approx. 98 N (10 kg, 22 lb).
- Do not cross wire on boot.

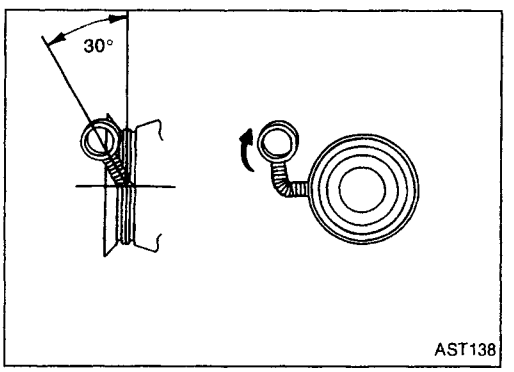

- Bend twisted end of boot clamp as shown at left. (This will prevent interference with other parts.)

Simpo PDF Merge and Split Unregistered Version - http://www.simpopdf.com

Removal and Installation

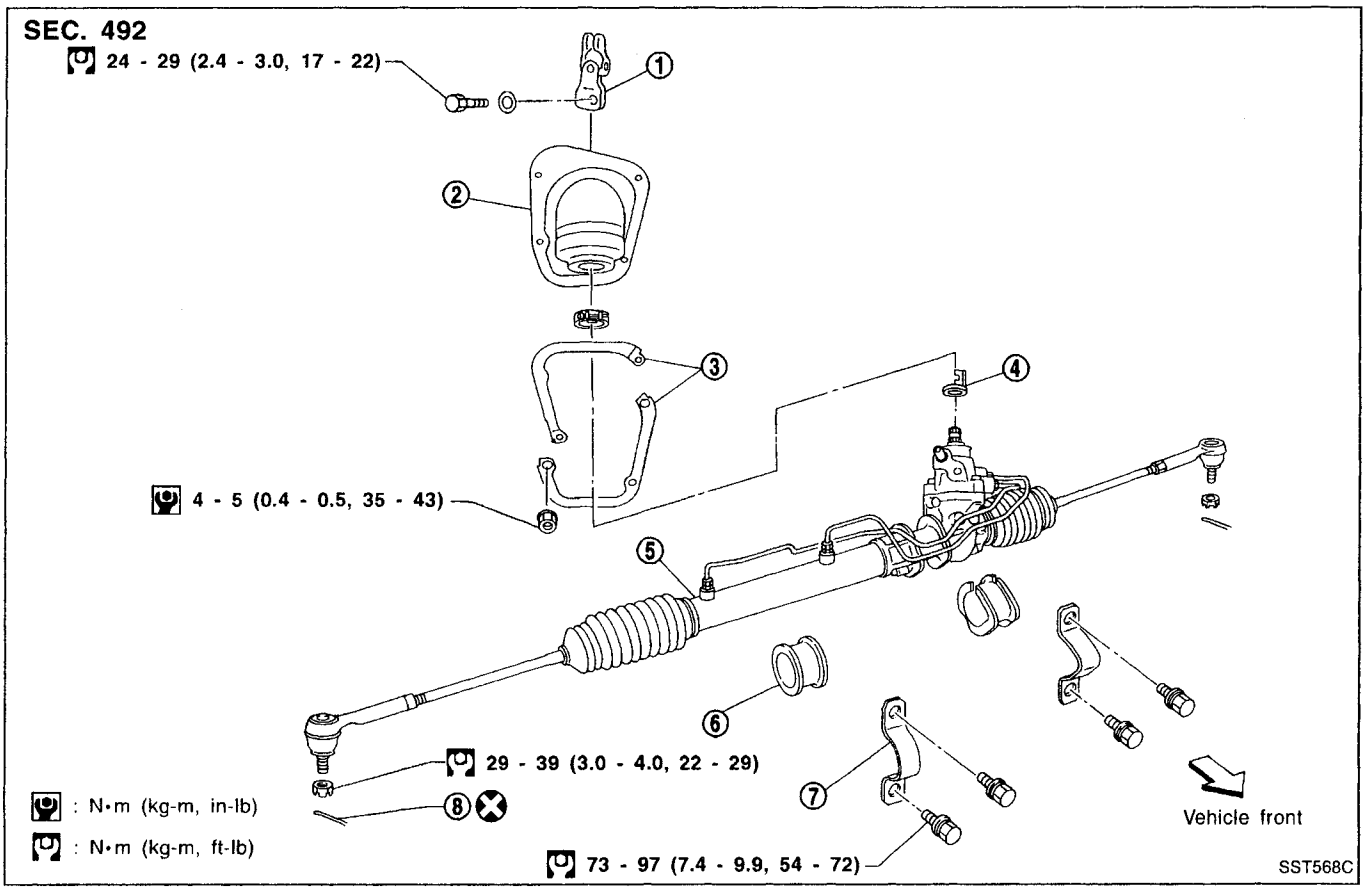

① Lower joint
② Hole cover
③ Insulator bracket
④ Rear cover cap
⑤ Gear and linkage assembly
⑥ Rack mounting insulator
⑦ Gear housing mounting bracket
⑧ Cotter pin

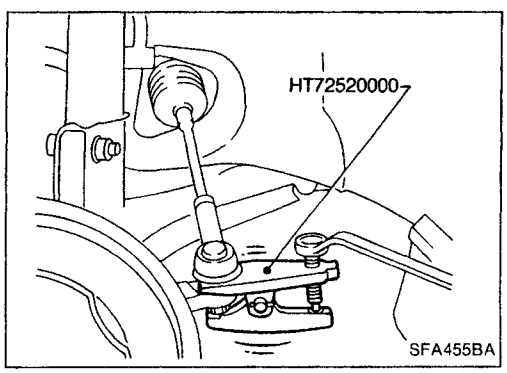

CAUTION:

- **The rotation of the spiral cable (SRS "Air bag" component part) is limited. If the steering gear must be removed, set the front wheels in the straight-ahead direction. Do not rotate the steering column while the steering gear is removed.**
- **Remove the steering wheel before removing the steering lower joint to avoid damaging the SRS spiral cable.**
- Detach tie-rod outer sockets from knuckle arms with Tool.
- When disconnecting steering shaft lower joint, follow the procedure shown below.

1. Remove nuts for fitting the hole cover.
2. Disconnect the lower joint while shifting the hole cover.

ST

Simpo PDF Merge and Split Unregistered Version - http://www.simpopdf.com

Removal and Installation (Cont'd)

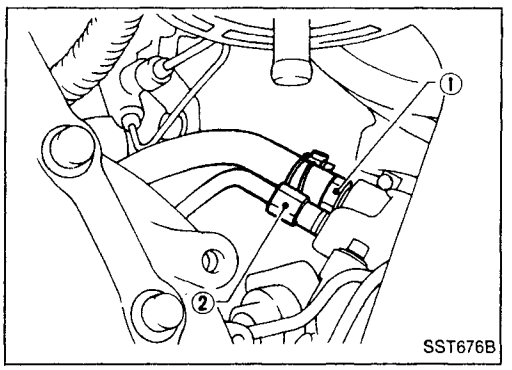

- Install pipe connector.
- Observe specified tightening torque when tightening high-pressure and low-pressure pipe connectors. Excessive tightening will damage threads of connector or O-ring.

  Connector tightening torque:

  ① Low-pressure side
  27 - 39 N·m (2.8 - 4.0 kg-m, 20 - 29 ft-lb)

  ② High-pressure side
  15 - 25 N·m (1.5 - 2.5 kg-m, 11 - 18 ft-lb)
- The O-ring in low-pressure pipe connector is larger than that in high-pressure connector. Take care to install the proper O-ring.

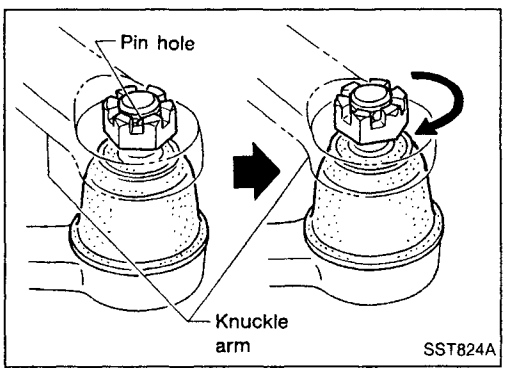

- Initially, tighten nut on tie-rod outer socket and knuckle arm to 29 to 39 N·m (3 to 4 kg-m, 22 to 29 ft-lb). Then tighten further to align nut groove with first pin hole so that cotter pin can be installed.

CAUTION:
Tightening torque must not exceed 49 N·m (5 kg-m, 36 ft-lb).

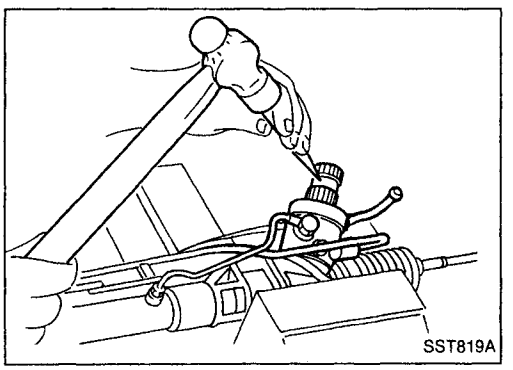

- Before removing lower joint from gear, set gear in neutral (wheels in straight-ahead position). After removing lower joint, put matching mark on pinion shaft and pinion housing to record neutral position.
- To install, set left and right dust boots to equal deflection. Attach lower joint by aligning matching marks of pinion shaft and pinion housing.

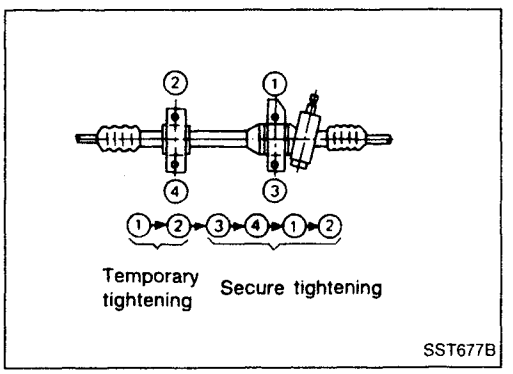

- Tighten gear housing mounting bracket bolts in the order shown.

Simpo PDF Merge and Split Unregistered Version - http://www.simpopdf.com

SEC. 492

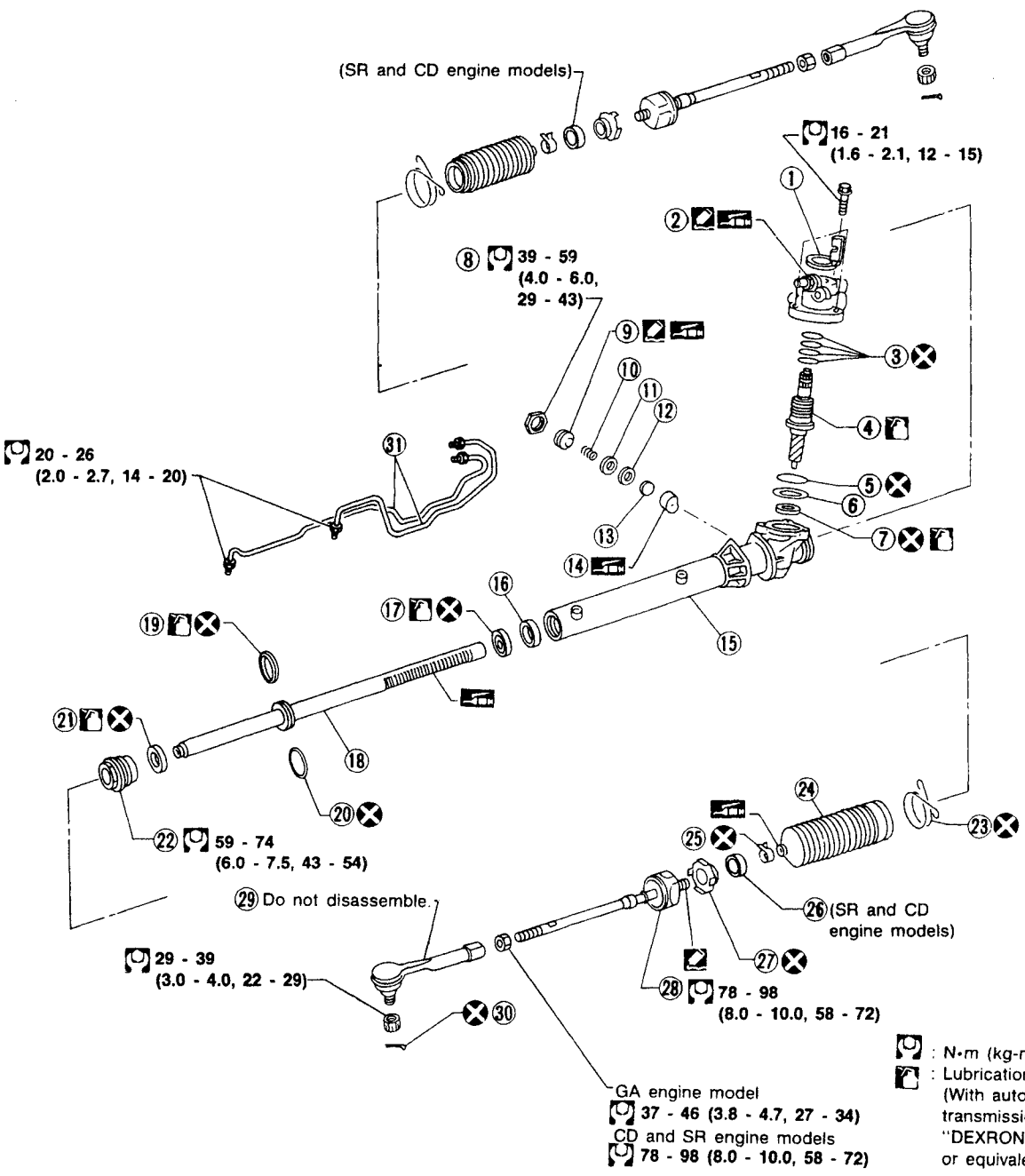

① Rear cover cap
② Rear housing assembly
③ Pinion seal ring
④ Pinion assembly
⑤ O-ring
⑥ Shim
⑦ Pinion oil seal
⑧ Lock nut
⑨ Adjusting screw
⑩ Spring
⑪ Spring disc
⑫ Washer
⑬ Spring seat
⑭ Retainer
⑮ Gear housing
⑯ Center bushing
⑰ Rack oil seal
⑱ Rack assembly
⑲ Rack seal ring
⑳ O-ring
㉑ Rack oil seal
㉒ End cover assembly
㉓ Boot clamp
㉔ Dust boot
㉕ Boot band
㉖ Steering gear spacer
㉗ Lock plate
㉘ Tie-rod inner socket
㉙ Tie-rod outer socket
㉚ Cotter pin
㉛ Gear housing tube

ST

Simpo PDF Merge and Split Unregistered Version - http://www.simpopdf.com

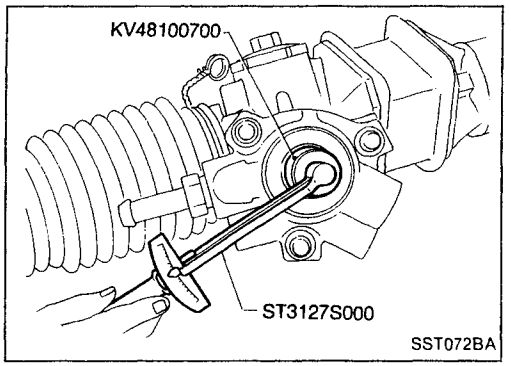

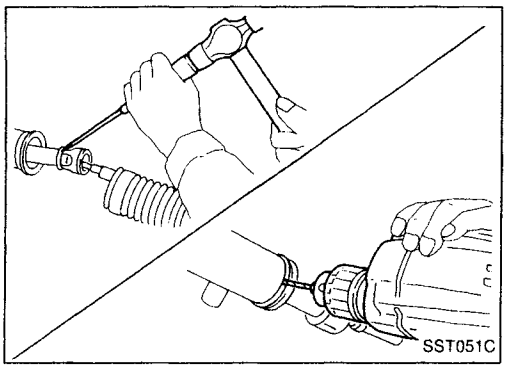

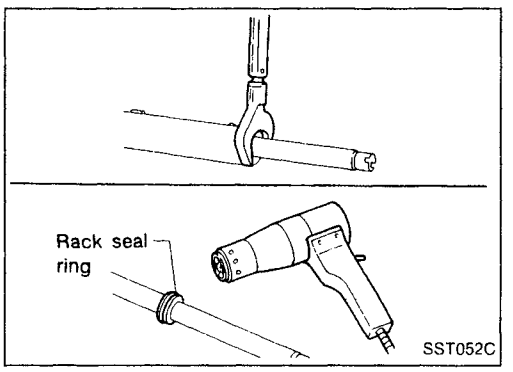

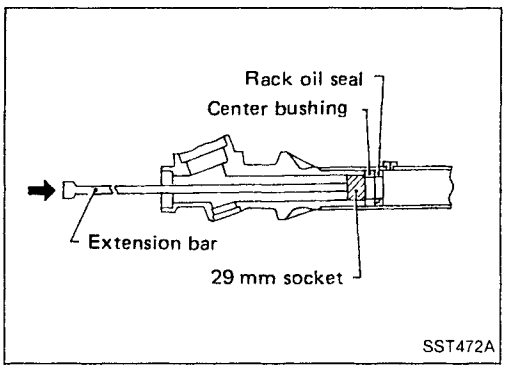

Disassembly

1. Prior to disassembling, measure pinion rotating torque. Record the pinion rotating torque as a reference.

- **Before measuring, disconnect gear housing tube and drain fluid.**
- **Use soft jaws when holding steering gear housing. Handle gear housing carefully, as it is made of aluminum. Do not grip cylinder in a vise.**

2. Remove pinion gear.

Be careful not to damage pinion gear when removing pinion seal ring.

3. Remove tie-rod outer sockets and boots.
4. Loosen tie-rod inner socket by prying up staked portion, and remove socket.
5. Remove retainer.
6. Remove pinion assembly.
7. Use a 2 to 2.5 mm (0.079 to 0.098 in) diameter drill to completely remove staked portion of gear housing end.
8. Remove end cover assembly with a suitable tool.
9. Draw out rack assembly.
10. Remove rack seal ring.

- Using a heat gun, heat rack seal to approximately 40°C (104°F).
- Remove rack seal ring.

Be careful not to damage rack.

11. Remove center bushing and rack oil seal using tape wrapped socket and extension bar.

Do not scratch inner surfaces of pinion housing.

Inspection

Thoroughly clean all parts in cleaning solvent or automatic transmission fluid "DEXRON™" type or equivalent. Blow dry with compressed air, if available.

BOOT

- Check condition of boot. If cracked excessively, replace it.
- Check boots for accumulation of power steering fluid.

RACK

Thoroughly examine rack gear. If damaged, cracked or worn, replace it.

Simpo PDF Merge and Split Unregistered Version - http://www.simpopdf.com

Inspection (Cont'd)

PINION ASSEMBLY

- Thoroughly examine pinion gear. If pinion gear is damaged, cracked or worn, replace it.
- Check that all bearings roll freely. Ensure that balls, rollers and races are not cracked, pitted or worn. Replace if necessary.

GEAR HOUSING CYLINDER

Check gear housing cylinder bore for scratches or other damage. Replace if necessary.

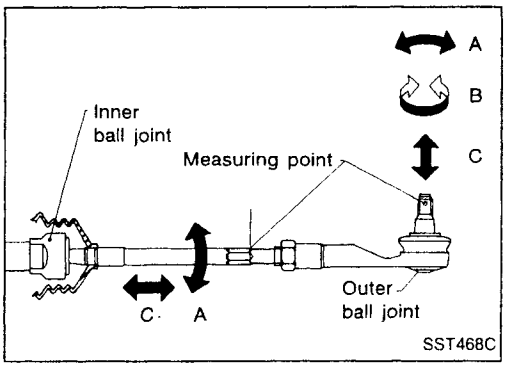

TIE-ROD OUTER AND INNER SOCKETS

- Check ball joints for swinging force.
  Tie-rod outer and inner ball joints swinging force "A":
  Refer to SDS (ST-35).
- Check ball joint for rotating torque.
  Tie-rod outer ball joint rotating torque "B":
  Refer to SDS (ST-35).
- Check ball joints for axial end play.
  Tie-rod outer and inner ball joints axial end play "C":
  Refer to SDS (ST-35).
- Check condition of dust cover. If cracked excessively, replace outer tie-rod.

Assembly

1. Using a heat gun, heat new teflon rack seal ring to approximately 40°C (104°F). Then place it onto rack.

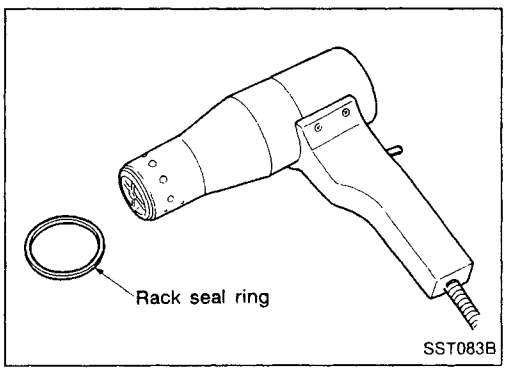

2. Using Tool, compress rack seal ring securely onto rack.
Always insert Tool from the rack gear side.

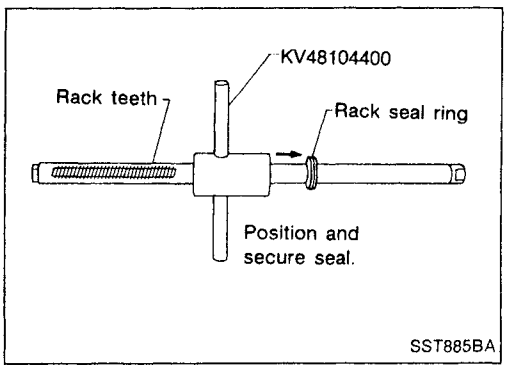

3. Insert new rack oil seal.
- **Place plastic film into rack oil seal to prevent damage by rack teeth.**
- **Do not forget to remove plastic film after rack oil seal is positioned properly.**
- **Make sure lips of rack oil seal face each other.**

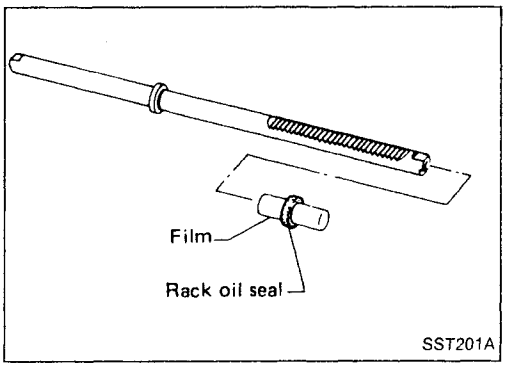

ST

Simpo PDF Merge and Split Unregistered Version - http://www.simpopdf.com

Assembly (Cont'd)

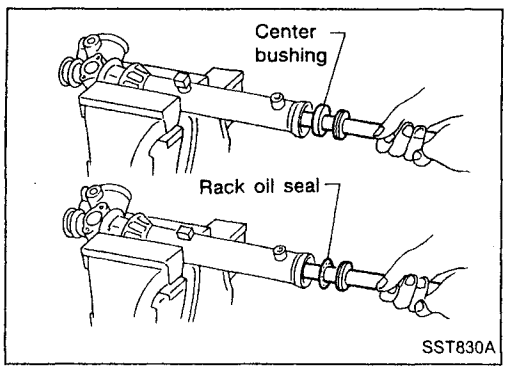

4. Install center bushing and rack oil seal with rack assembly.

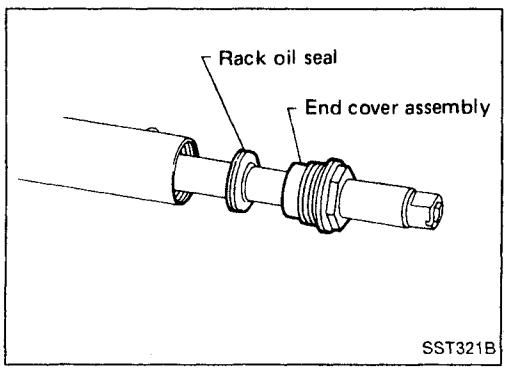

5. Insert rack oil seal and end cover assembly to rack. Then tighten end cover assembly.

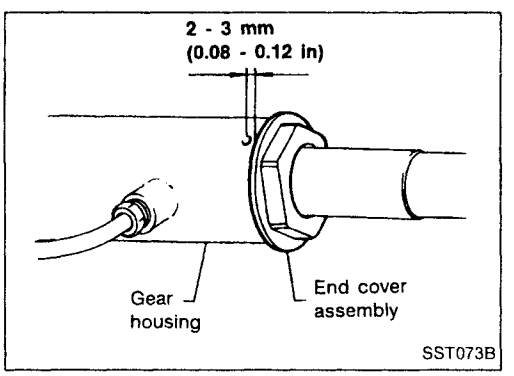

6. Fasten end cover assembly to gear housing by staking.

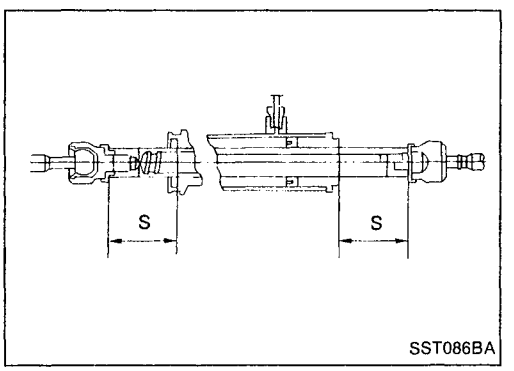

7. Set rack gear in neutral position.
   Rack stroke "S":
   Refer to SDS (ST-35).

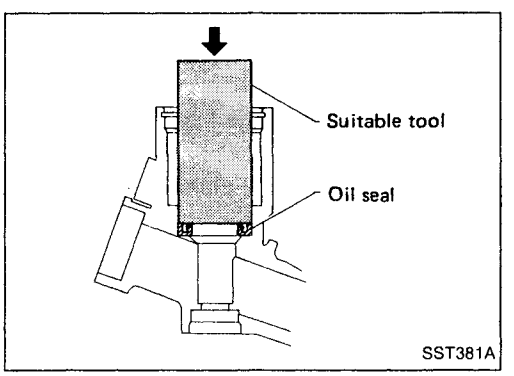

8. Coat seal lip of new pinion oil seal with multi-purpose grease. Install it into pinion housing of gear with a suitable tool.

Make sure lip of oil seal faces up when installed.

Simpo PDF Merge and Split Unregistered Version - http://www.simpopdf.com

Assembly (Cont'd)

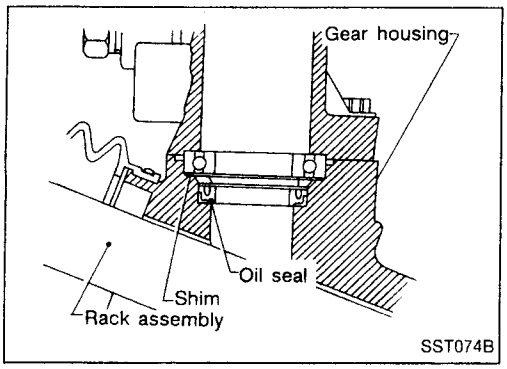

9. Install pinion bearing adjusting shim(s).
- Whenever pinion assembly, gear housing and rear housing are disassembled, replace shim(s) with new ones. Always use the same number of shim(s) when replacing.

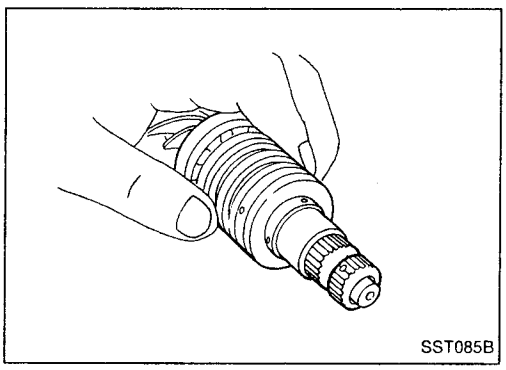

10. Install new pinion seal ring (made of Teflon) on pinion gear assembly.
- Using a heat gun, heat pinion seal ring to approximately 40°C (104°F) before installing it onto pinion gear assembly.
- Make sure pinion seal ring is properly settled in valve groove.

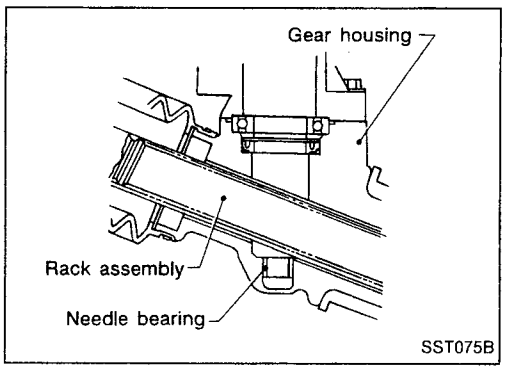

11. Apply a coat of multi-purpose grease to needle bearing roller and oil seal lip.

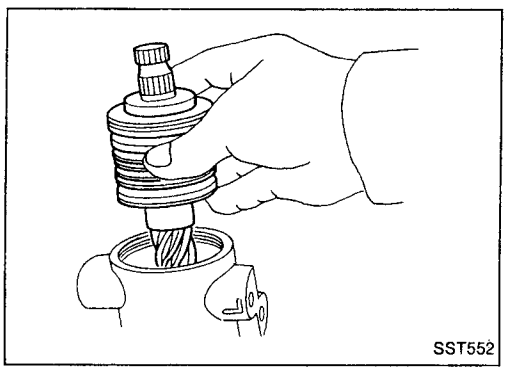

12. Install pinion assembly to rear housing.
Be careful not to damage pinion oil seal.

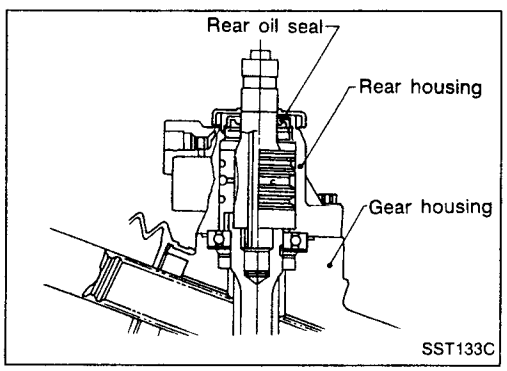

13. Apply a coat of multi-purpose grease to new rear oil seal lip before installing rear housing.

ST

Simpo PDF Merge and Split Unregistered Version - http://www.simpopdf.com

Assembly (Cont'd)

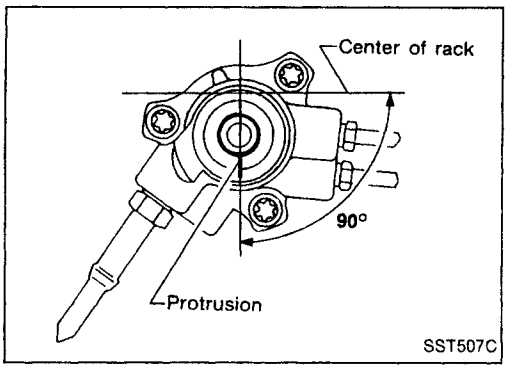

14. Ensure that the rack is centered. Install rear cover cap so that its protrusion is positioned as shown in figure.

Be careful not to damage worm ring and oil seal.

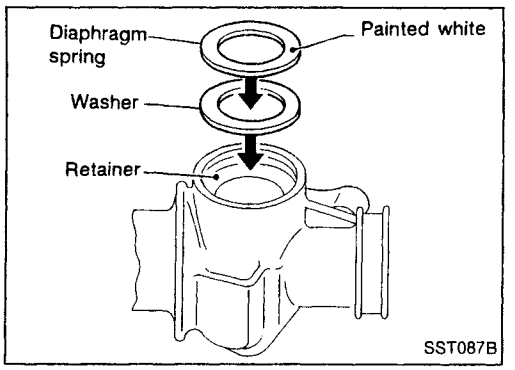

15. Install diaphragm spring into gear housing.
- Always install retainer, spring washer and diaphragm spring in that order.
- Make sure convex end (painted white) of diaphragm spring faces outward when installing.

16. Install retainer spring and adjusting screw temporarily.

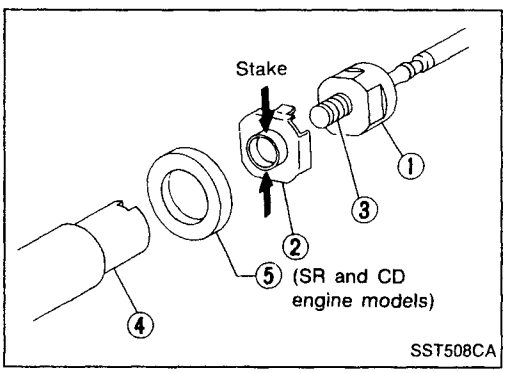

17. Install new lock plate.
a. Attach lock plate ② to side rod inner socket ①.
b. Insert steering gear spacer ⑤ to rack ④.
c. Apply locking sealant to inner socket threads ③. Screw inner socket into rack ④ and tighten to specified torque.
d. Stake lock plate at two places.

CAUTION:
To prevent scratching the boot, remove burrs from lock plate.

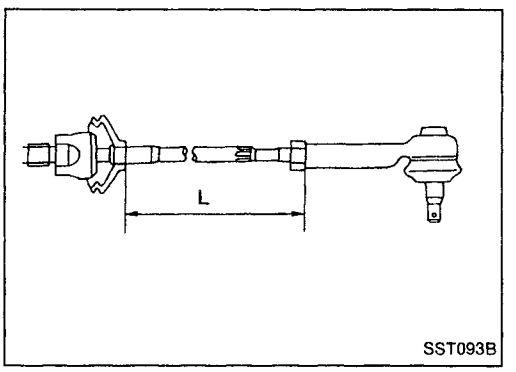

18. Tighten outer socket lock nut.
Tie-rod length "L":
Refer to SDS (ST-35).

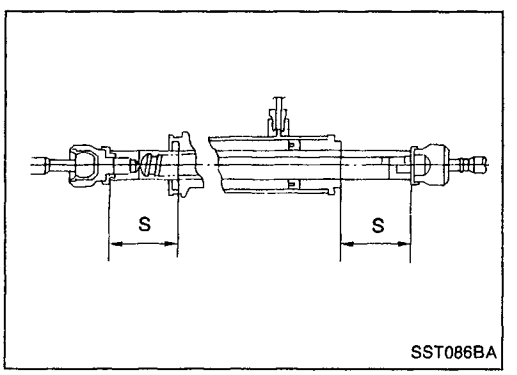

19. Measure rack stroke.
Rack stroke "S":
Refer to SDS (ST-35).

Simpo PDF Merge and Split Unregistered Version - http://www.simpopdf.com

Assembly (Cont'd)

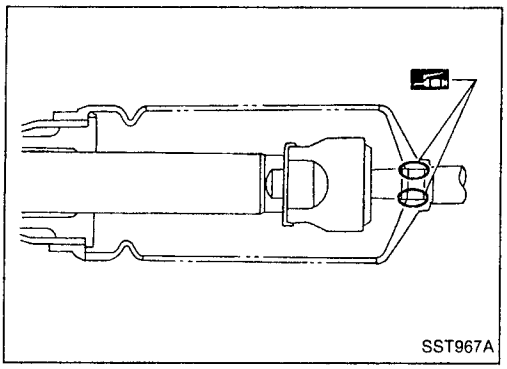

20. Before installing boot, coat the contact surfaces between boot and tie-rod with grease.

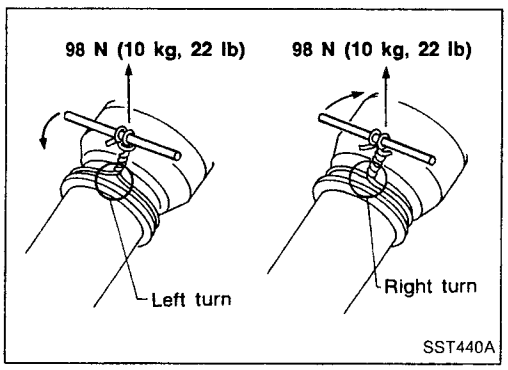

21. Install boot clamps.
- To install, wrap boot clamp around boot groove twice. To tighten clamp, place a screwdriver through both rings. Twist rings 4 to 4-1/2 turns while pulling with a force of approx. 98 N (10 kg, 22 lb).
- Twist boot clamp in the direction shown in figure at left.

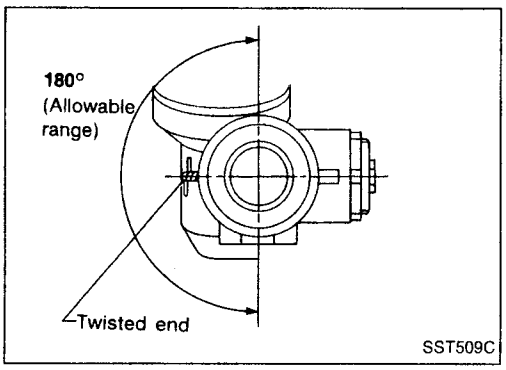

- Locate twisted end of boot clamp in the range shown. (This will prevent interference with other parts.)

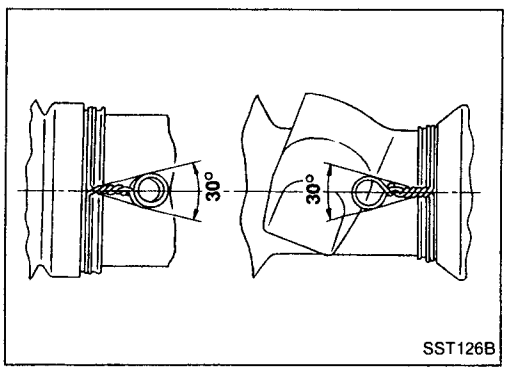

- After twisting boot clamp, bend twisted and diagonally so it does not contact boot.

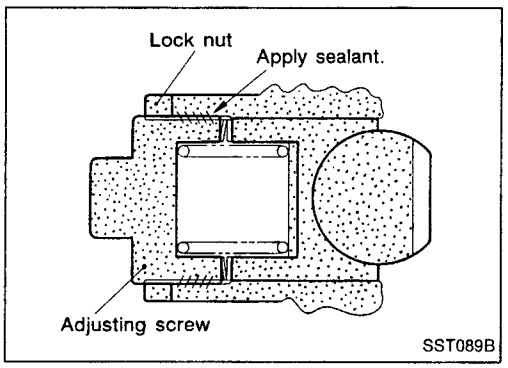

Adjustment

Adjust pinion rotating torque as follows:
1. Set rack to the neutral position without fluid in the gear.
2. Coat the adjusting screw with locking sealant and screw it in.
3. Lightly tighten lock nut.
4. Tighten adjusting screw to a torque of 4.9 to 5.9 N·m (50 to 60 kg-cm, 43 to 52 in-lb).
5. Loosen adjusting screw, then retighten it to 0.2 N·m (2 kg-cm, 1.7 in-lb).

Simpo PDF Merge and Split Unregistered Version - http://www.simpopdf.com

Adjustment (Cont'd)

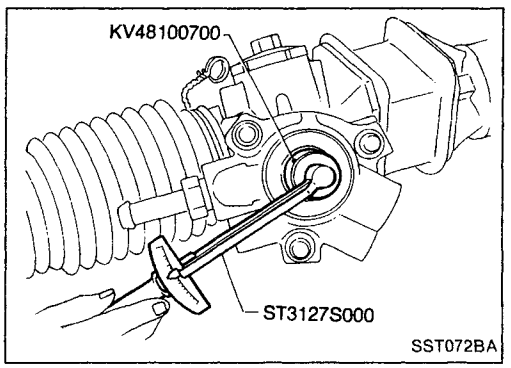

6. Move rack over its entire stroke several times.
7. Measure pinion rotating torque within the range of 180° from neutral position.
   Stop the gear at the point of maximum torque.
8. Loosen adjusting screw, then retighten it to 4.9 N·m (50 kg-cm, 43 in-lb).
9. Loosen adjusting screw by 70° to 110°.

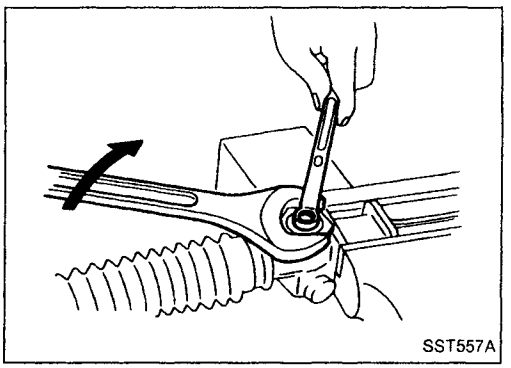

10. Prevent adjusting screw from turning, and tighten lock nut to specified torque.

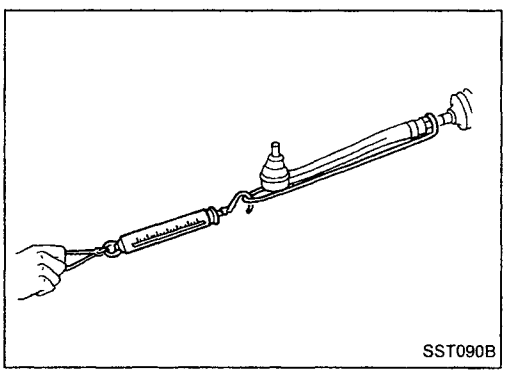

11. Check rack sliding force on vehicle as follows:

a. Install steering gear onto vehicle, but do not connect tie-rod to knuckle arm.
b. Connect all piping and fill with steering fluid.
c. Start engine and bleed air completely.
d. Disconnect steering column lower joint from the gear.
e. Keep engine at idle and make sure steering fluid has reached normal operating temperature.
f. Pull tie-rod slowly to move it from neutral position to ±11.5 mm (±0.453 in) at speed of 3.5 mm (0.138 in)/s. Check that rack sliding force is within specification.
   Average rack sliding force:
   152.0 - 240.3 N (15.5 - 24.5 kg, 34.2 - 54.0 lb)
   Maximum force deviation:
   98 N (10 kg, 22 lb)
g. Check sliding force outside above range at rack speed of 40 mm (1.57 in)/s.
   Maximum rack sliding force:
   294 N (30 kg, 66 lb)
   Maximum force deviation:
   147 N (15 kg, 33 lb)

- If rack sliding force is not within specification, readjust by repeating adjustment procedure from the beginning.
- If rack sliding force is still out of specification after readjustment, gear assembly needs to be replaced.

Simpo PDF Merge and Split Unregistered Version - http://www.simpopdf.com

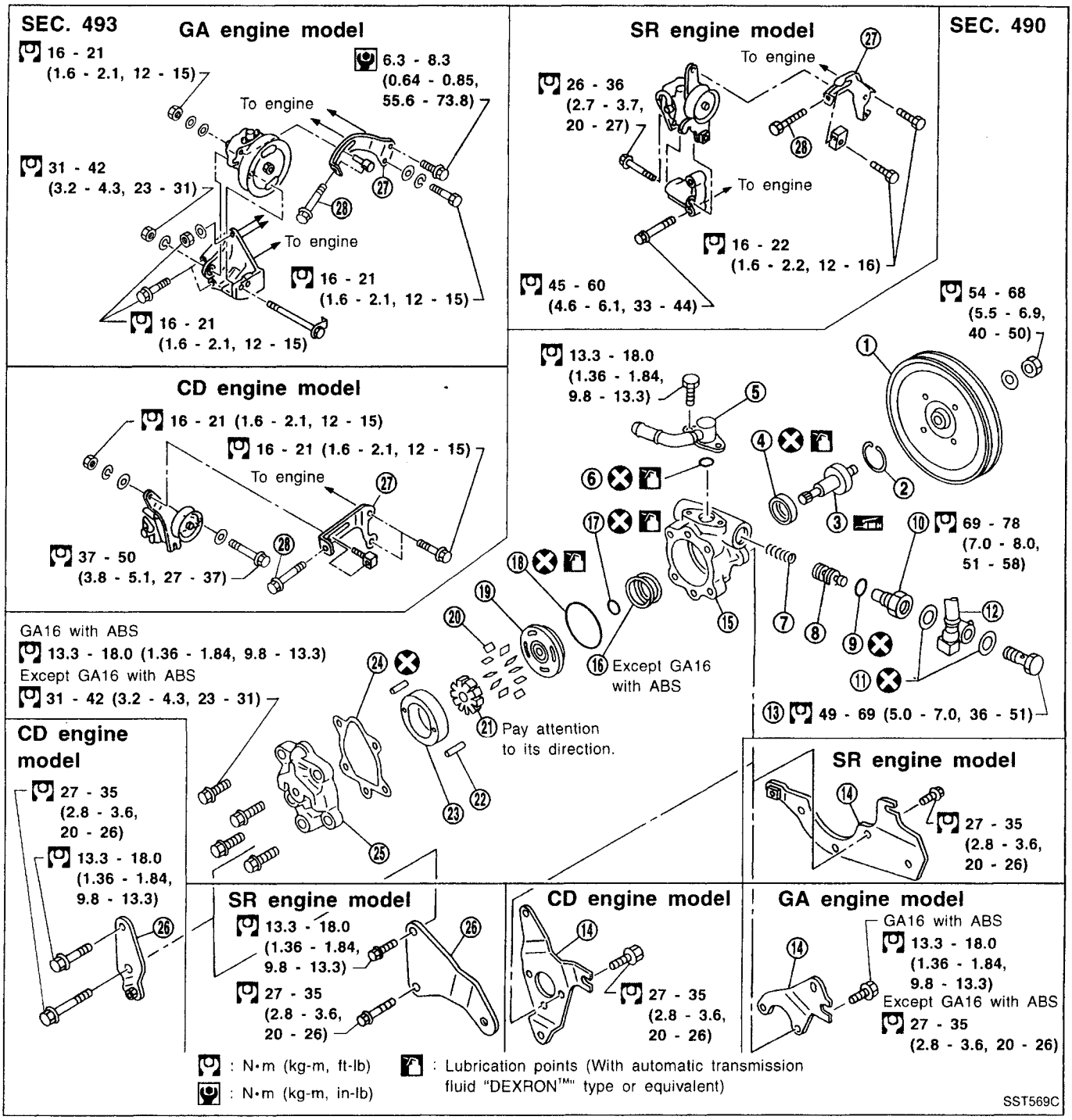

① Pulley
② Snap ring
③ Drive shaft assembly
④ Oil seal
⑤ Suction pipe
⑥ O-ring
⑦ Spring
⑧ Control valve
⑨ O-ring
⑩ Connector
⑪ Copper washer
⑫ Hose
⑬ Connector bolt
⑭ Mounting bracket
⑮ Front housing
⑯ Spring
⑰ O-ring
⑱ O-ring
⑲ Front side plate
⑳ Vane
㉑ Rotor
㉒ Pin
㉓ Cam ring
㉔ Gasket
㉕ Rear housing
㉖ Mounting bracket
㉗ Adjusting bracket
㉘ Adjusting bolt

ST

Simpo PDF Merge and Split Unregistered Version - http://www.simpopdf.com

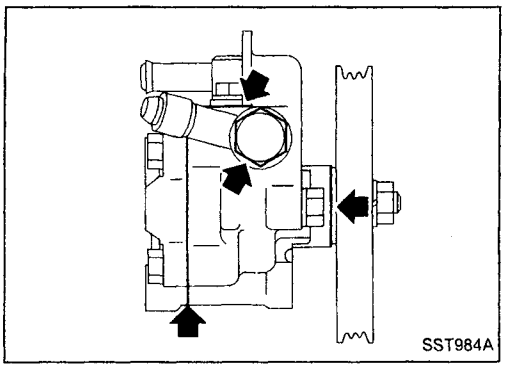

Pre-disassembly Inspection

Disassemble the power steering oil pump only if the following items are found.

- Oil leak from any point shown in the figure
- Deformed or damaged pulley
- Poor performance

Disassembly

CAUTION:

- **Parts which can be disassembled are strictly limited. Never disassemble parts other than those specified.**
- **Disassemble in as clean a place as possible.**
- **Clean your hands before disassembly.**
- **Do not use rags; use nylon cloths or paper towels.**
- **Follow the procedures and cautions in the Service Manual.**
- **When disassembling and reassembling, do not let foreign matter enter or contact the parts.**

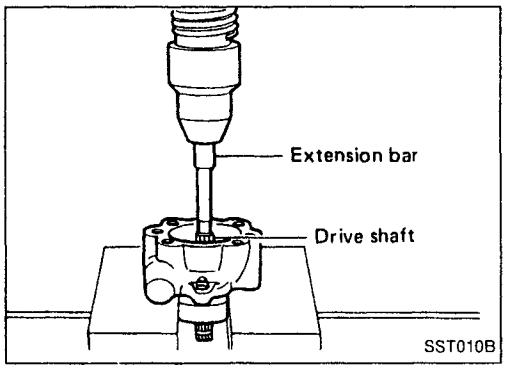

- Remove snap ring, then draw drive shaft out.

Be careful not to drop drive shaft.

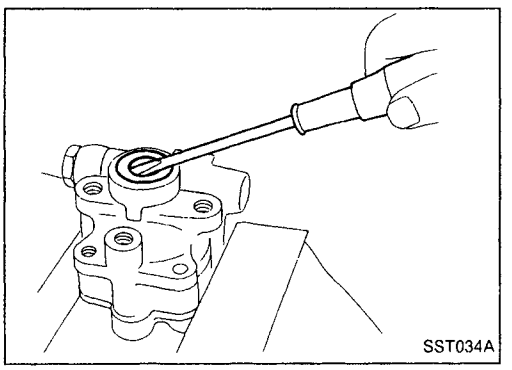

- Remove oil seal.

Be careful not to damage front housing.

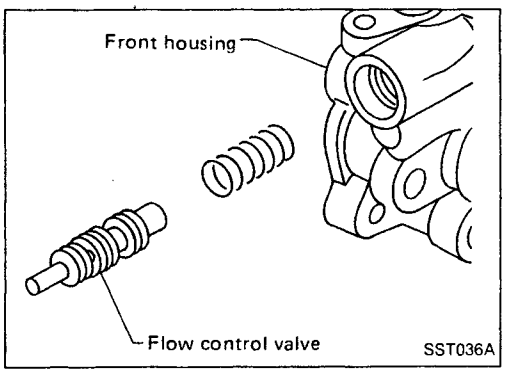

- Remove connector and flow control valve with spring.

Be careful not to drop flow control valve.

Simpo PDF Merge and Split Unregistered Version - http://www.simpopdf.com

Inspection

- If pulley is cracked or deformed, replace it.
- If an oil leak is found around pulley shaft oil seal, replace the seal.
- If serration on pulley or pulley shaft is deformed or worn, replace it.

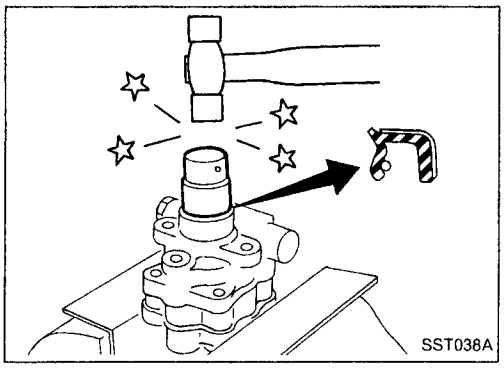

Assembly

Assemble oil pump, noting the following instructions.

- Make sure O-rings and oil seal are properly installed.
- Always install new O-rings and oil seal.
- Be careful of oil seal direction.
- Cam ring, rotor and vanes must be replaced as a set if necessary.
- Coat each part with ATF when assembling.

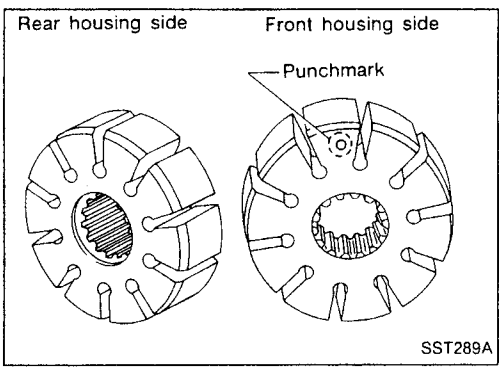

- Pay attention to the direction of rotor.

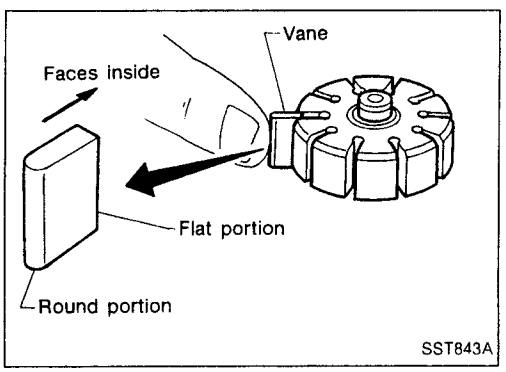

- When assembling vanes to rotor, rounded surfaces of vanes must face cam ring side.

ST

Simpo PDF Merge and Split Unregistered Version - http://www.simpopdf.com

Assembly (Cont'd)

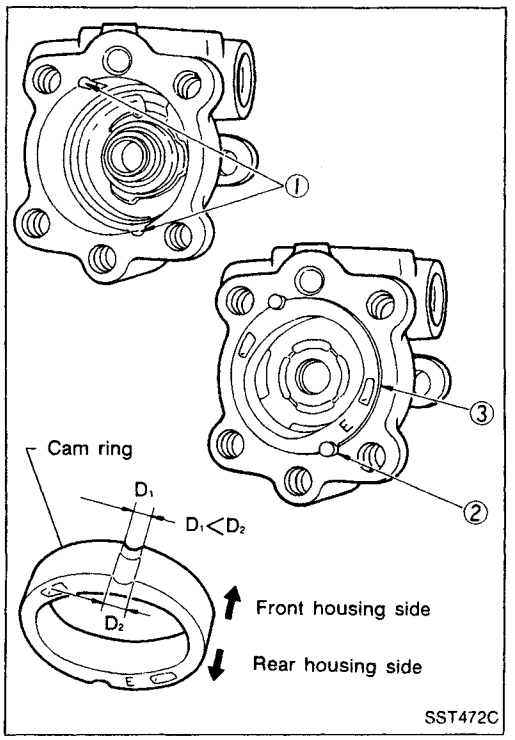

- Insert pin ② into pin groove ① of front housing and rotor. Then install cam ring ③ as shown at left.

  Cam ring:

  D_1 is less than D_2

Simpo PDF Merge and Split Unregistered Version - http://www.simpopdf.com

Oil Cooler (Heavy duty kit for CD20 engine model)

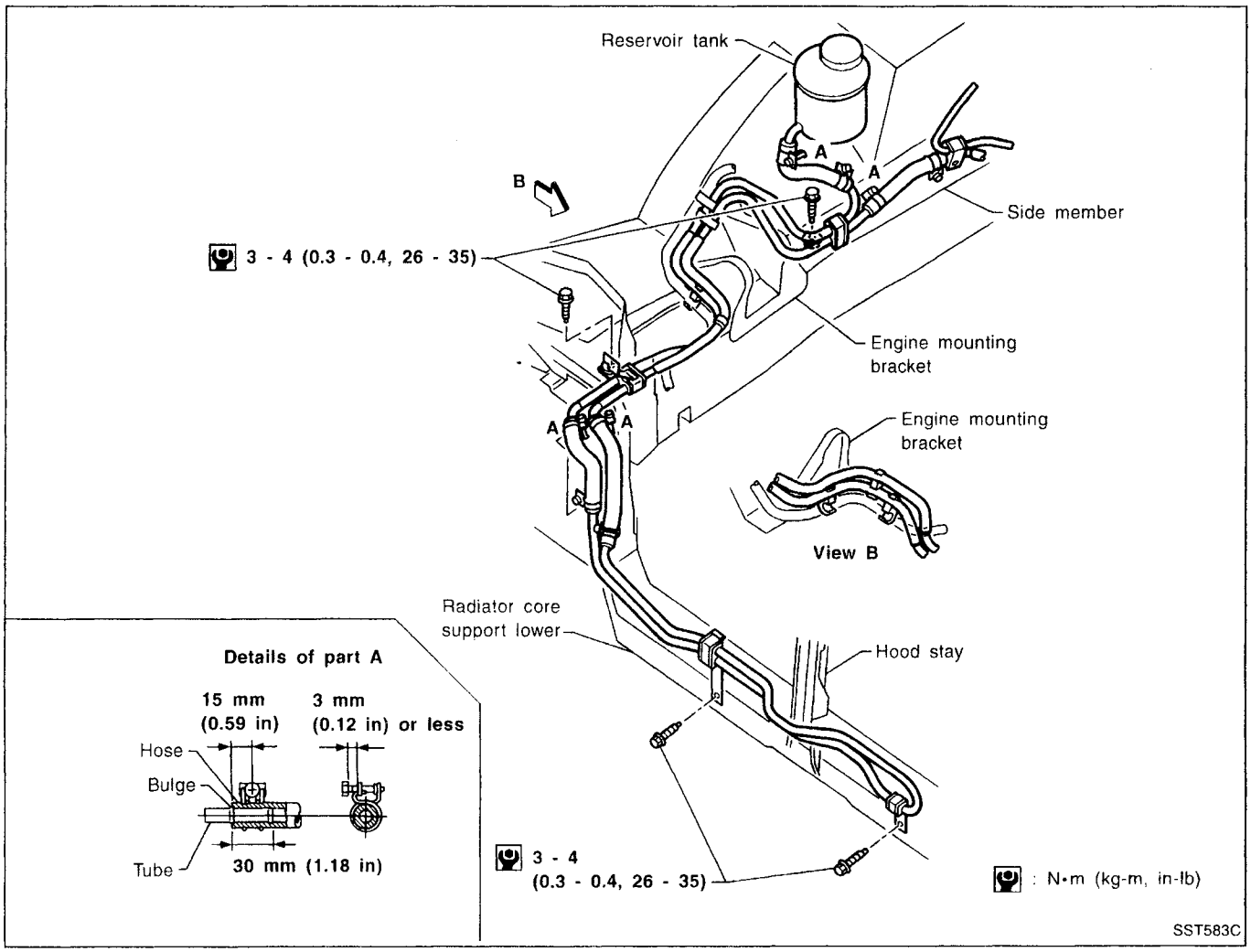

Removal and Installation

- Install heavy duty kit for power steering oil cooler as shown in figure.
- Fill fluid and bleed hydraulic system. Refer to ST-7.
- Check fluid leakage and fluid level. Refer to ST-6.

ST

Simpo PDF Merge and Split Unregistered Version - http://www.simpopdf.com

General Specifications

Applied model	GA engine model		CD and SR engine models
Steering model	Manual steering	Power steering	
Steering gear type	R24N	PR24AC	
Steering overall gear ratio	23.2	17.1	
Turns of steering wheel (Lock to lock)	4.21	3.17	2.95
Steering column type	Collapsible, tilt		

Inspection and Adjustment

GENERAL

Steering wheel axial play mm (in)	0 (0)
Steering wheel play mm (in)	35 (1.38) or less
Movement of gear housing mm (in)	± 2 (± 0.08) or less

STEERING COLUMN

Applied model	All
Steering column length "L" mm (in)	533.0 - 535.0 (20.98 - 21.06)

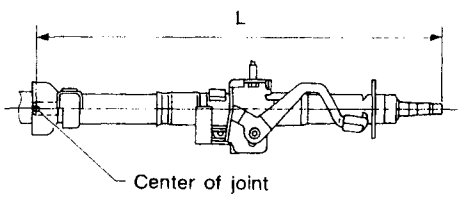

SST334C

Simpo PDF Merge and Split Unregistered Version - http://www.simopdf.com

Inspection and Adjustment (Cont'd)

STEERING GEAR AND LINKAGE

Applied model	GA engine model	CD and SR engine models
Steering gear type	R24N	PR24AC
Tie-rod outer ball joint		
Swinging force at cotter pin hole: "A" N (kg, lb)	6.9 - 64.7 (0.7 - 6.6, 1.5 - 14.6)	
Rotating torque: "B" N·m (kg-cm, in-lb)	0.29 - 2.94 (3.0 - 30.0, 2.6 - 26.0)	
Axial end play: "C" mm (in)	0.5 (0.020) or less	
Tie-rod inner ball joint		
Swinging force*: "A" N (kg, lb)	3.9 - 53.0 (0.4 - 5.4, 0.9 - 11.9)	6.9 - 56.9 (0.7 - 5.8, 1.5 - 12.8)
Axial end play: "C" mm (in)	0.4 (0.016)	0 (0)
Tie-rod standard length "L" mm (in)	187 (7.36)	

*: Measuring point [ℓ: 137 mm (5.39 in)]

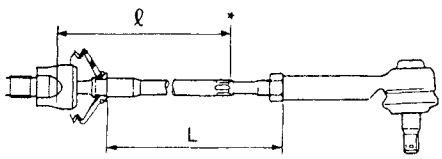

SST488C

Retainer adjustment		
Adjusting screw		
Initial tightening torque N·m (kg-cm, in-lb)	9.8 (100, 87)	4.9 - 5.9 (50 - 60, 43 - 52)
Retightening torque after loosening N·m (kg-cm, in-lb)	—	0.2 (2, 1.7)
Tightening torque after gear has settled N·m (kg-cm, in-lb)	—	4.9 (50, 43)
Returning angle degree	Less than 60° [Within play of 0.1 mm (0.004 in)/15 N·m (1.5 kg-m, 11 ft-lb)]	70° - 110°

Applied model	GA engine model	CD and SR engine models
Steering gear type	R24N	PR24AC
Rack stroke "S" mm (in)	70 (2.76)	65 (2.56)

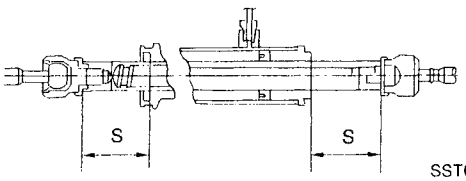

SST086BA

POWER STEERING

Applied model	All
Steering gear type	PR24AC
Rack sliding force N (kg, lb)	
Under normal operating oil pressure	
Range within ±11.5 mm (±0.453 in) from the neutral position at rack speed of 3.5 mm (0.138 in)/s	
Average force	152.0 - 240.3 (15.5 - 24.5, 34.2 - 54.0)
Maximum force deviation	98 (10, 22)
Except for the above range	
Maximum sliding force	294 (30, 66)
Maximum force deviation	147 (15, 33)
Steering wheel turning force (Measured at one full turn from the neutral position) N (kg, lb)	39 (4, 9) or less
Fluid capacity (Approximate) ℓ (Imp qt)	0.9 (3/4)
Oil pump maximum pressure kPa (bar, kg/cm^2, psi)	7,649 - 8,238 (76.5 - 82.4, 78 - 84, 1,109 - 1,194)

ST

Simpo PDF Merge and Split Unregistered Version - http://www.simpopdf.com

AUTOMATIC TRANSAXLE

SECTION AT

CONTENTS

PREPARATION AND PRECAUTIONS 3
- Special Service Tools 3
- Commercial Service Tools 6
- Service Notice 7
- Supplemental Restraint System (SRS) "AIR BAG" (Dual Air Bag System) 7
- Supplemental Restraint System (SRS) "AIR BAG" (Single Air Bag System) 7

DESCRIPTION 8
- Cross-sectional View 8
- Hydraulic Control Circuit 10
- Shift Mechanism 14
- Control System 15

TROUBLE DIAGNOSES 17
- Preliminary Check (Prior to Road Testing) 17
- Road Testing 17
- Stall Tasting 24
- Pressure Testing 26
- Wiring Diagram — AT — 28
- Electrical Components Inspection 30

ON-VEHICLE SERVICE 31
- Control Valve Assembly and Accumulator 31
- Throttle Wire Adjustment 33
- Control Cable Installation and Adjustment 35
- Governor Valve 36
- Inhibitor Switch Adjustment 37
- Differential Side Oil Seal Replacement 37

REMOVAL AND INSTALLATION 39
- Removal 39
- Installation 40

MAJOR OVERHAUL 42
- All Models 42
- Except Model 34X81 44
- Model 34X81 45
- Shift Control Components 46
- Oil Channel 47
- Locations of Adjusting Shims, Needle Bearings, Thrust Washers and Snap Rings — Except Model 34X81 48
- Locations of Adjusting Shims, Needle Bearings, Thrust Washers and Snap Rings — Model 34X81 49

DISASSEMBLY 50

REPAIR FOR COMPONENT PARTS 66
- Manual Shaft and Throttle Lever 66
- Oil Pump 70
- Control Valve Assembly 74
- Control Valve Upper Body 86
- Control Valve Lower Body 90
- Reverse Clutch 93
- High Clutch 97
- Forward Clutch and Overrun Clutch 102
- Low & Reverse Brake 108
- Rear Internal Gear, Forward Clutch Hub and Overrun Clutch Hub 112
- Output Shaft, Output Gear, Idler Gear, Reduction Pinion Gear and Bearing Retainer — Except Model 34X81 116
- Output Shaft, Idler Gear, Reduction Pinion Gear and Bearing Retainer — Model 34X81 121
- Band Servo Piston Assembly 126
- Final Drive — Except Model 34X81 131
- Final Drive — Model 34X81 135

Simpo PDF Merge and Split Unregistered Version - http://www.simpopdf.com

CONTENTS (Cont'd.)

ASSEMBLY 138
Assembly 1 138
Adjustment 1 139
Assembly 2 147
Adjustment 2 151
Assembly 3 155
Adjustment 3 157
Assembly 4 158
SERVICE DATA AND SPECIFICATIONS (SDS) 165
General Specifications 165
Specifications and Adjustments 165

When you read wiring diagrams:
- **Read GI section, "HOW TO READ WIRING DIAGRAMS".**
- **See EL section, "POWER SUPPLY ROUTING" for power distribution circuit.**

Simpo PDF Merge and Split Unregistered Version - http://www.simpopdf.com

Special Service Tools

Tool number Tool name	Description	
ST2505S001 Oil pressure gauge set ① ST25051001 Oil pressure gauge ② ST25052000 Hose ③ ST25053000 Joint pipe ④ ST25054000 Adapter ⑤ ST25055000 Adapter	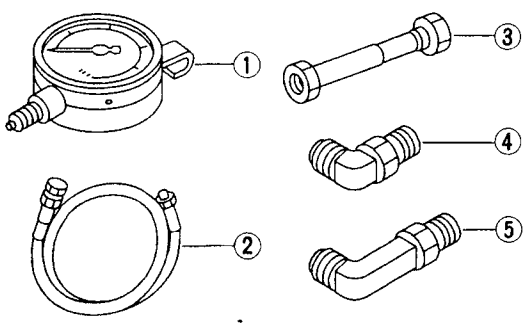 NT097	Measuring line pressure and governor pressure
KV31103000 Drift	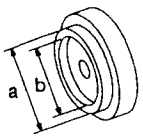 NT105	Installing differential side oil seal (Use with ST35325000) **a: 59 mm (2.32 in) dia.** **b: 49 mm (1.93 in) dia.**
ST35325000 Drift	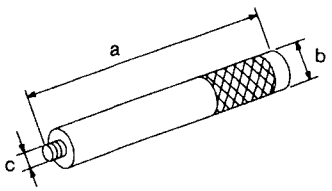 NT417	Installing differential side oil seal (Use with KV31103000) **a: 215 mm (8.46 in)** **b: 25 mm (0.98 in) dia.** **c: M12 x 1.5P**
KV31103200 Clutch spring compressor	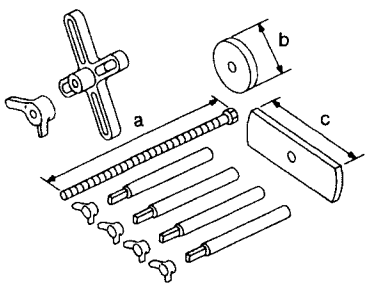 NT425	Removing and installing clutch return spring **a: 179 mm (7.05 in)** **b: 76 mm (2.99 in) dia.** **c: 174 mm (6.85 in)**
ST23540000 Pin punch	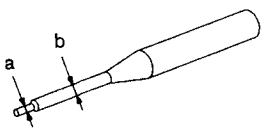 NT442	Removing and installing parking rod plate and manual plate **a: 2.3 mm (0.091 in) dia.** **b: 4 mm (0.16 in) dia.**
KV32101000 Pin punch	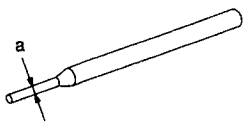 NT410	Installing throttle lever and manual shaft retaining pins Removing and installing differential pinion mate shaft lock pin. **a: 4 mm (0.16 in) dia.**

AT

Simpo PDF Merge and Split Unregistered Version - http://www.simpopdf.com

Special Service Tools (Cont'd)

Tool number Tool name	Description	
ST3306S001 Differential side bearing puller set ① ST33051001 Puller ② ST33061000 Adapter	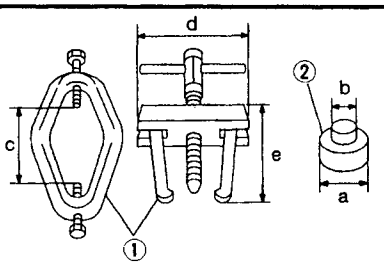 NT413	Removing differential side bearing inner race **a: 38 mm (1.50 in) dia.** **b: 28.5 mm (1.122 in) dia.** **c: 130 mm (5.12 in)** **d: 135 mm (5.31 in)** **e: 100 mm (3.94 in)**
KV381054S0 (ST33290001) Puller	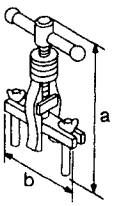 NT414	● Removing differential side oil seal ● Removing idler gear bearing outer race — EXCEPT MODEL 34X81 — ● Removing output shaft bearing outer race from bearing retainer ● Removing output gear bearing outer race from bearing retainer — MODEL 34X81 — ● Removing differential side bearing outer race ● Removing needle bearing from bearing retainer **a: 250 mm (9.84 in)** **b: 160 mm (6.30 in)**
ST27180001 Puller	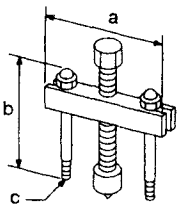 NT424	● Removing idler gear ● Removing output gear (Except model 34X81) **a: 100 mm (3.94 in)** **b: 110 mm (4.33 in)** **c: M8 x 1.25P**
ST30031000 Puller	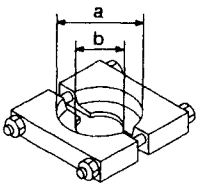 NT411	Removing reduction pinion gear bearing inner race (Except model 34X81) **a: 90 mm (3.54 in) dia.** **b: 50 mm (1.97 in) dia.**
ST30021000 Puller	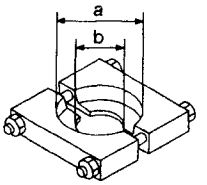 NT411	Removing differential side bearing (Except model 34X81) **a: 110 mm (4.33 in) dia.** **b: 68 mm (2.68 in) dia.**
ST35272000 Drift	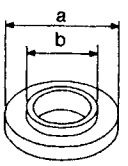 NT426	● Installing reduction pinion gear bearing inner race ● Installing idler gear bearing inner race ● Installing output gear bearing inner race (Except model 34X81) **a: 72 mm (2.83 in) dia.** **b: 35.5 mm (1.398 in) dia.**

Simpo PDF Merge and Split Unregistered Version - http://www.simpopdf.com

Special Service Tools (Cont'd)

Tool number Tool name	Description	
ST37830000 Drift	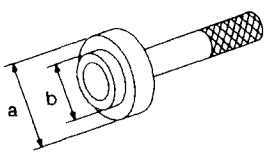 NT427	Installing idler gear bearing outer race **a: 62 mm (2.44 in) dia.** **b: 39 mm (1.54 in) dia.**
ST33200000 Drift	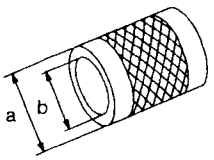 NT091	Installing differential side bearing (Except model 34X81) **a: 60 mm (2.36 in) dia.** **b: 44.5 mm (1.752 in) dia.**
ST35271000 Drift	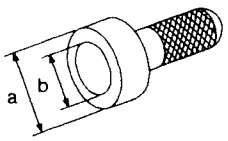 NT115	● Installing idler gear ● Installing output gear (Except model 34X81) **a: 72 mm (2.83 in) dia.** **b: 44 mm (1.73 in) dia.**
ST33400001 Drift	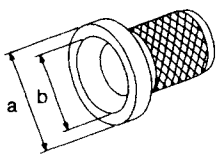 NT086	● Installing oil pump housing oil seal ● Installing output gear bearing outer race onto bearing retainer (Except model 34X81) **a: 60 mm (2.36 in) dia.** **b: 47 mm (1.85 in) dia.**
KV40104840 Drift	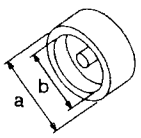 NT108	Installing output shaft bearing outer race onto bearing retainer (Except model 34X81) **a: 49 mm (1.93 in) dia.** **b: 42 mm (1.65 in) dia.**
KV38105710 Preload adapter	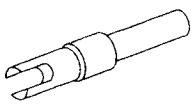 NT087	— MODEL 34X81 — ● Measuring turning torque of final drive assembly ● Measuring clearance between side gear and differential case with washer ● Selecting differential side bearing adjusting shim
ST35321000 Drift	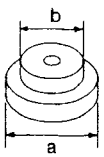 NT073	Installing output shaft bearing (Model 34X81) **a: 49 mm (1.93 in) dia.** **b: 41 mm (1.61 in) dia.**
ST30633000 Drift	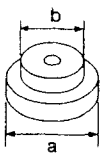 NT073	Installing differential side bearing outer race (Model 34X81) **a: 67 mm (2.64 in) dia.** **b: 49 mm (1.93 in) dia.**

AT

Simpo PDF Merge and Split Unregistered Version - http://www.simpopdf.com

Commercial Service Tools

Tool name	Description	
Puller	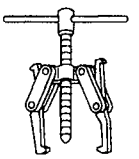 NT077	• Removing idler gear bearing inner race • Removing and installing band servo piston snap ring — EXCEPT MODEL 34X81 — • Removing output gear bearing inner race • Removing differential side bearing
Drift	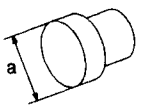 NT109	Removing idler gear bearing inner race (Except model 34X81) **a: 34 mm (1.34 in) dia.**
Drift	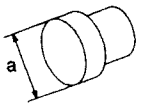 NT109	Installing needle bearing onto bearing retainer (Model 34X81) **a: 36 mm (1.42 in) dia.**
Drift	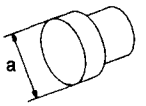 NT109	Removing output gear bearing inner race (Except model 34X81) **a: 33 mm (1.30 in) dia.**
Drift	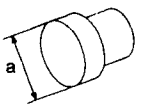 NT109	Removing differential side bearing (Except model 34X81) **a: 38 mm (1.50 in) dia.**
Drift	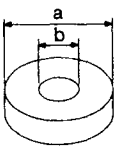 NT110	Removing output shaft bearing inner race (Except model 34X81) **a: 70 mm (2.76 in) dia.** **b: 30 mm (1.18 in) dia.**
Drift	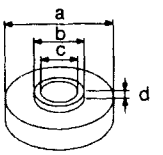 NT111	Installing output shaft bearing inner race (Except model 34X81) **a: 70 mm (2.76 in) dia.** **b: 34 mm (1.34 in) dia.** **c: 30 mm (1.18 in) dia.** **d: 2 mm (0.08 in)**

Simpo PDF Merge and Split Unregistered Version - http://www.simpopdf.com

Service Notice

- Before proceeding with disassembly, thoroughly clean the outside of the transaxle. It is important to prevent the internal parts from becoming contaminated by dirt or other foreign matter.
- Disassembly should be done in a clean work area.
- Use lint-free cloth or towels for wiping parts clean. Common shop rags can leave fibers that could interfere with the operation of the transaxle.
- Place disassembled parts in order, on a parts rack, for easier and proper assembly.
- All parts should be carefully cleaned with a general purpose, non-flammable solvent before inspection or reassembly.
- Gaskets, seals and O-rings should be replaced any time the transaxle is disassembled.
- It is very important to perform functional tests whenever they are indicated.
- The valve body contains precision parts and requires extreme care when parts are removed and serviced. Place disassembled valve body parts in order, on a parts rack, for easier and proper assembly. Care will also prevent springs and small parts from becoming scattered or lost.
- Properly installed vales, sleeves, plugs, etc. will slide along their bores in the valve body under their own weight.
- Before assembly, apply a coat of recommended ATF to all parts. Apply petroleum jelly to protect O-ring and seals, or hold bearings and washers in place during assembly. Do not use grease.
- Extremely care should be taken to avoid damage to O-rings, seals and gaskets when assembling.
- After overhaul, refill the transaxle with new ATF.

AT

Supplemental Restraint System (SRS) "AIR BAG" (Dual Air Bag System)

The Supplemental Restraint System "Air Bag" used along with a seat belt, helps to reduce the risk or severity of injury to the driver and front passenger in a frontal collision. The Supplemental Restraint System consists of air bag modules (located in the center of the steering wheel and on the instrument panel on the passenger side), a diagnosis sensor unit, warning lamp, wiring harness and spiral cable. Information necessary to service the system safely is included in the **RS section** of this Service Manual.

WARNING:

- **To avoid rendering the SRS inoperative, which could increase the risk of personal injury or death in the event of a collision which would result in air bag inflation, all maintenance must be performed by an authorized NISSAN dealer.**
- **Improper maintenance, including incorrect removal and installation of the SRS, can lead to personal injury caused by unintentional activation of the system.**
- **Do not use electrical test equipment on any circuit related to the SRS unless instructed to in this Service Manual. SRS wiring harnesses are covered with yellow insulation either just before the harness connectors or for the complete harness, for easy identification.**

Supplemental Restraint System (SRS) "AIR BAG" (Single Air Bag System)

The Supplemental Restraint System "Air Bag" and used along with a seat belt, helps to reduce the risk or severity of injury to the driver in a frontal collision. The Supplemental Restraint System consists of an air bag module (located in the center of the steering wheel), a diagnosis sensor unit, warning lamp, wiring harness and spiral cable. Information necessary to service the system safely is included in the **RS section** of this Service Manual.

WARNING:

- **To avoid rendering the SRS inoperative, which could increase the risk of personal injury or death in the event of a collision which would result in air bag inflation, all maintenance must be performed by an authorized NISSAN dealer.**
- **Improper maintenance, including incorrect removal and installation of the SRS, can lead to personal injury caused by unintentional activation of the system.**
- **Do not use electrical test equipment on any circuit related to the SRS unless instructed to in this Service Manual.**

Simpo PDF Merge and Split Unregistered Version - http://www.simpopdf.com

Cross-sectional View

EXCEPT MODEL 34X81

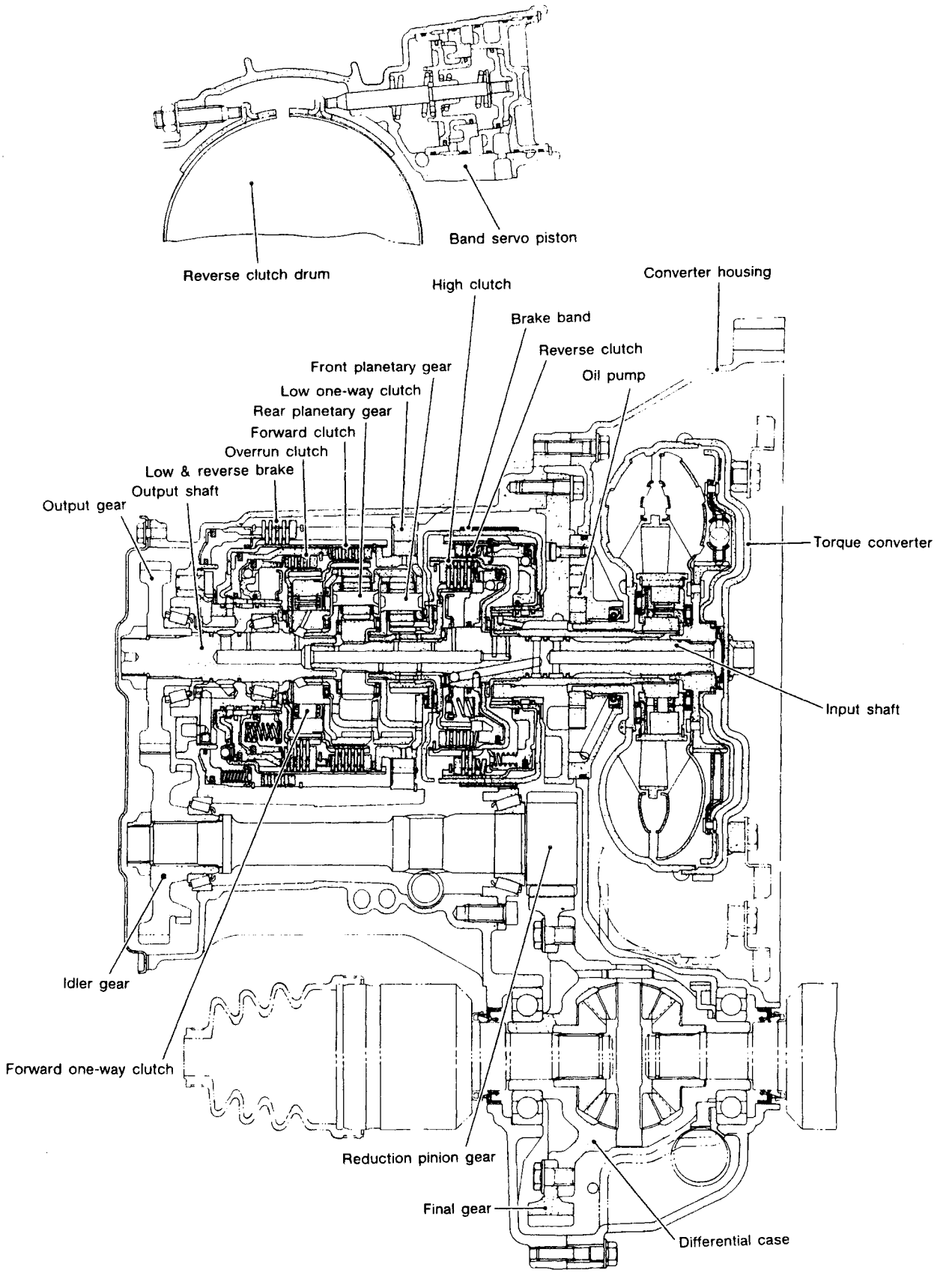

SAT502HB

Simpo PDF Merge and Split Unregistered Version - http://www.simpopdf.com

Cross-sectional View (Cont'd)

MODEL 34X81

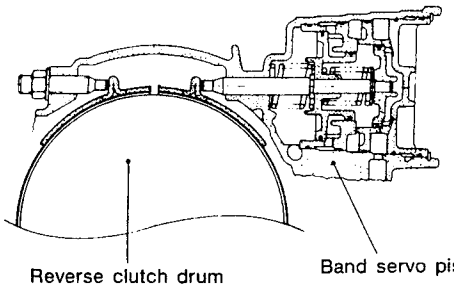

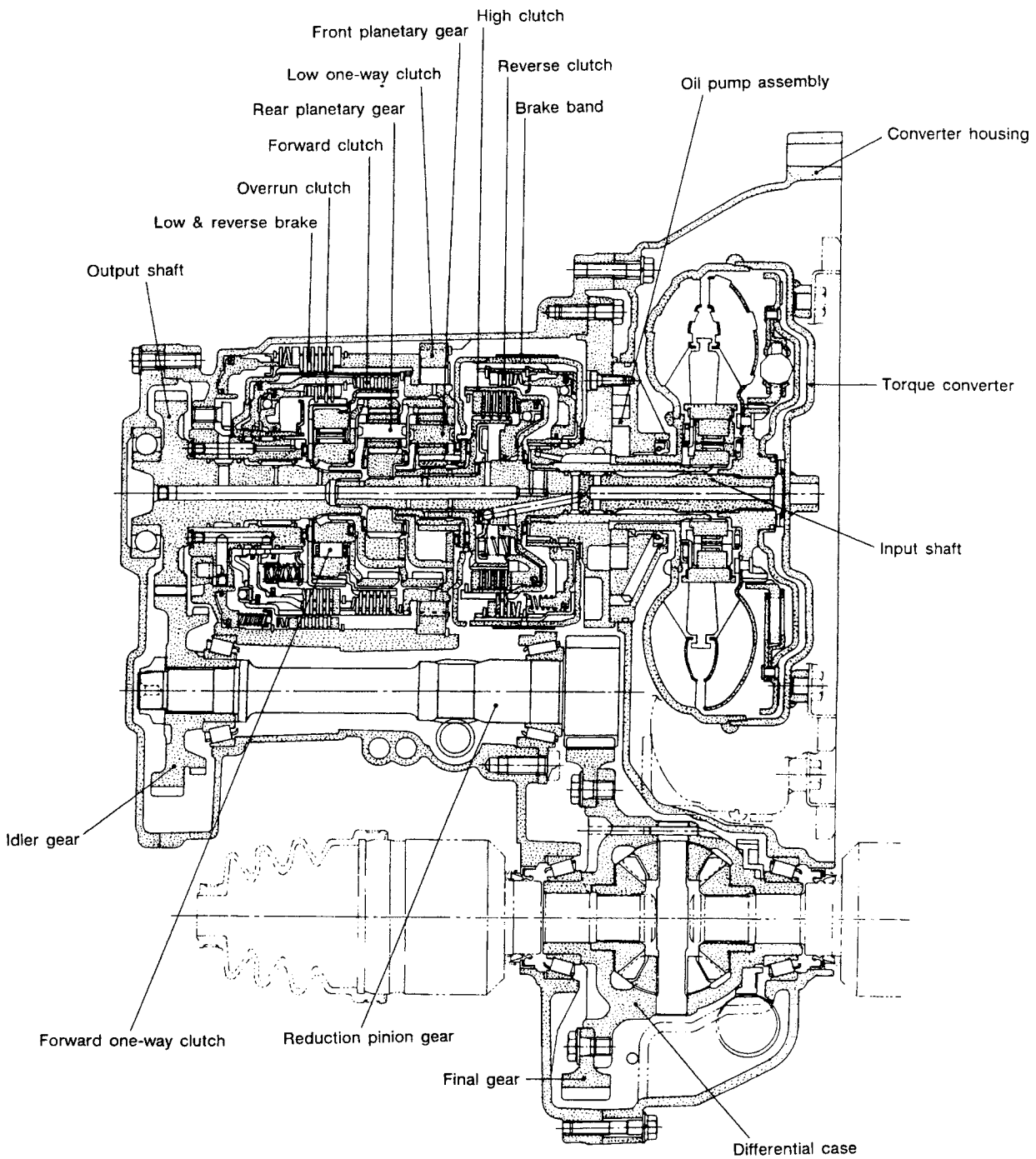

AT

SAT101EA

Simpo PDF Merge and Split Unregistered Version - http://www.simpopdf.com

Hydraulic Control Circuit

MODEL 34X68

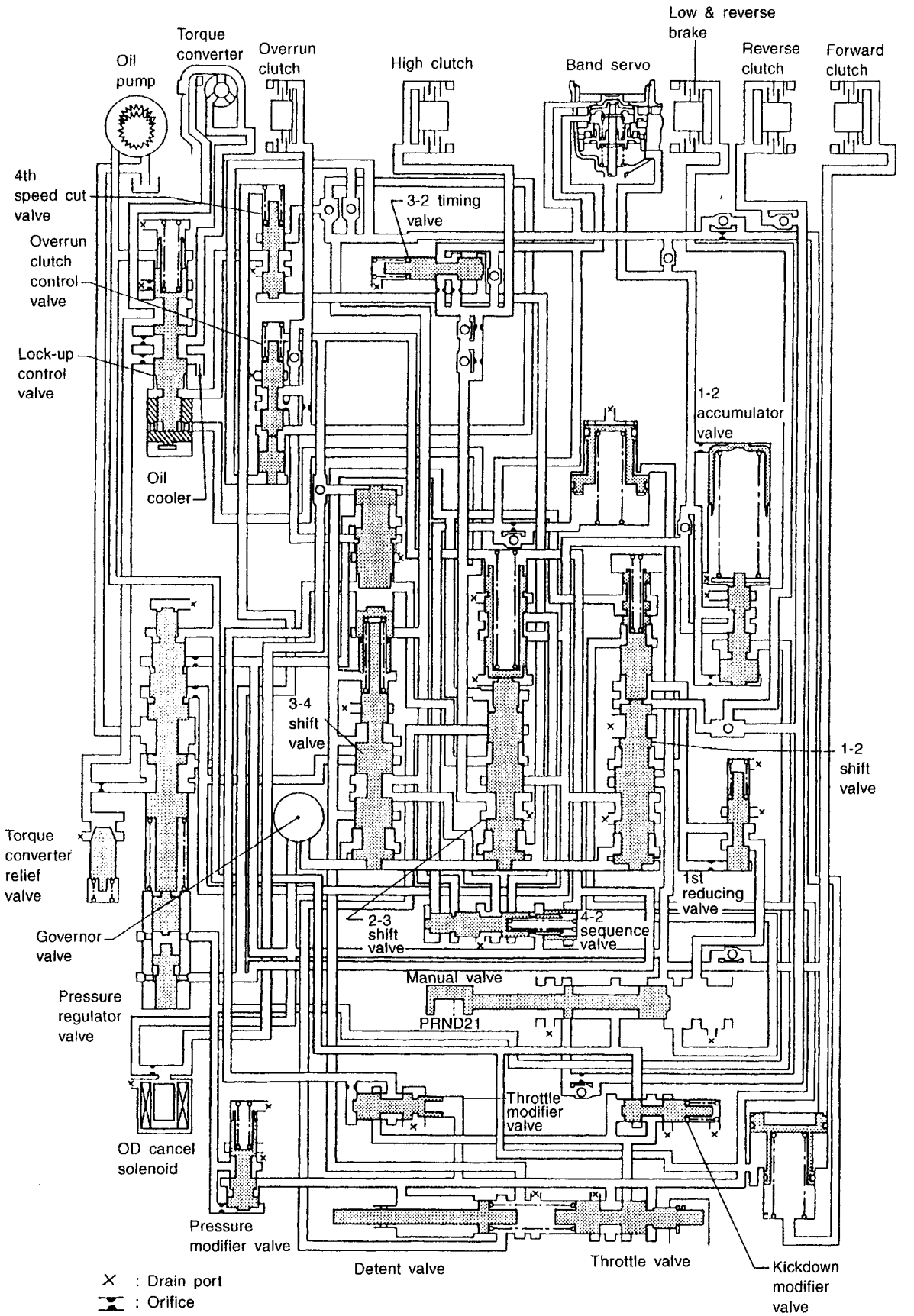

SAT196I

Simpo PDF Merge and Split Unregistered Version - http://www.simpopdf.com

Hydraulic Control Circuit (Cont'd)

MODEL 34X69 AND 34X70

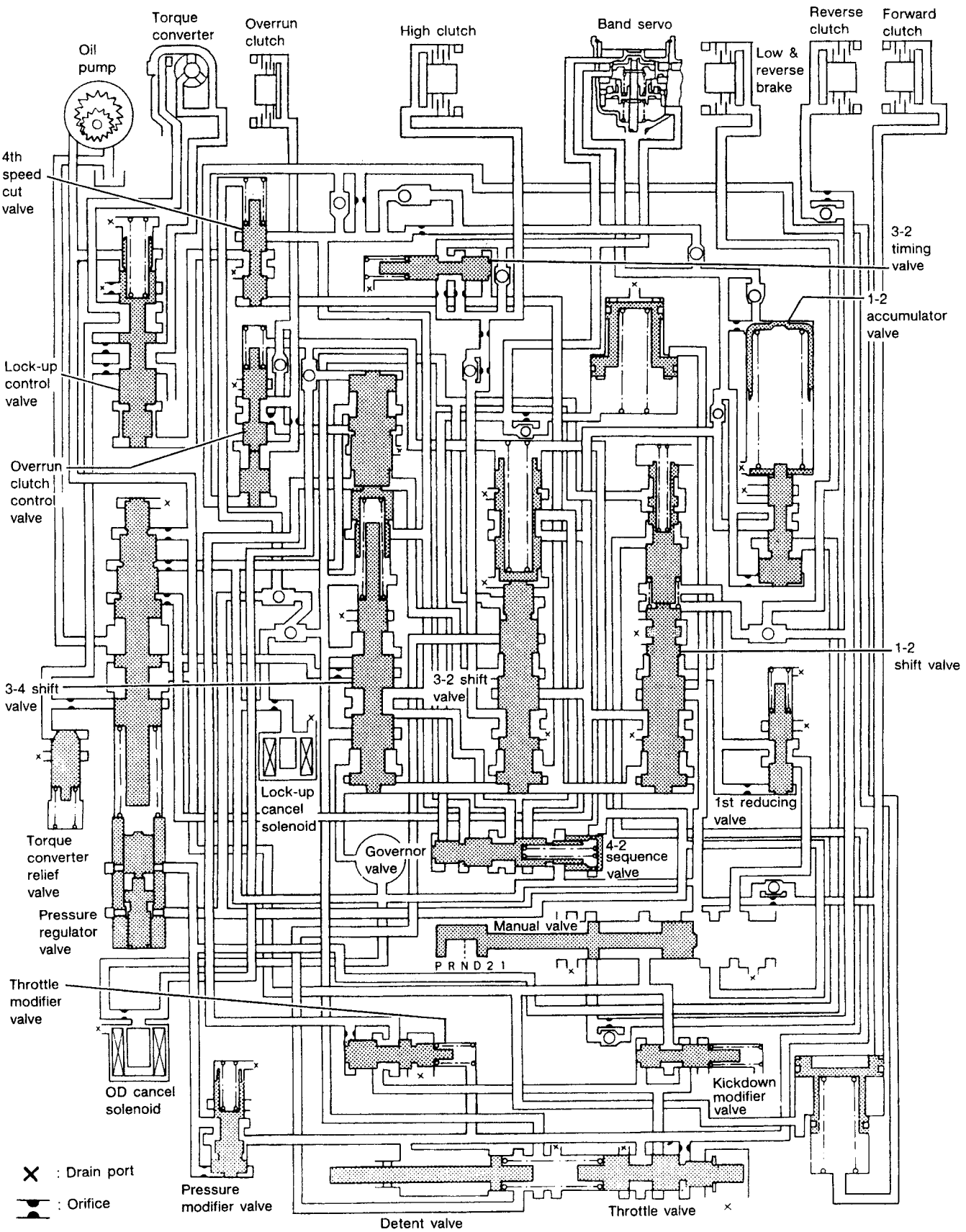

SAT509H

Simpo PDF Merge and Split Unregistered Version - http://www.simpopdf.com

Hydraulic Control Circuit (Cont'd)

MODEL 34X80

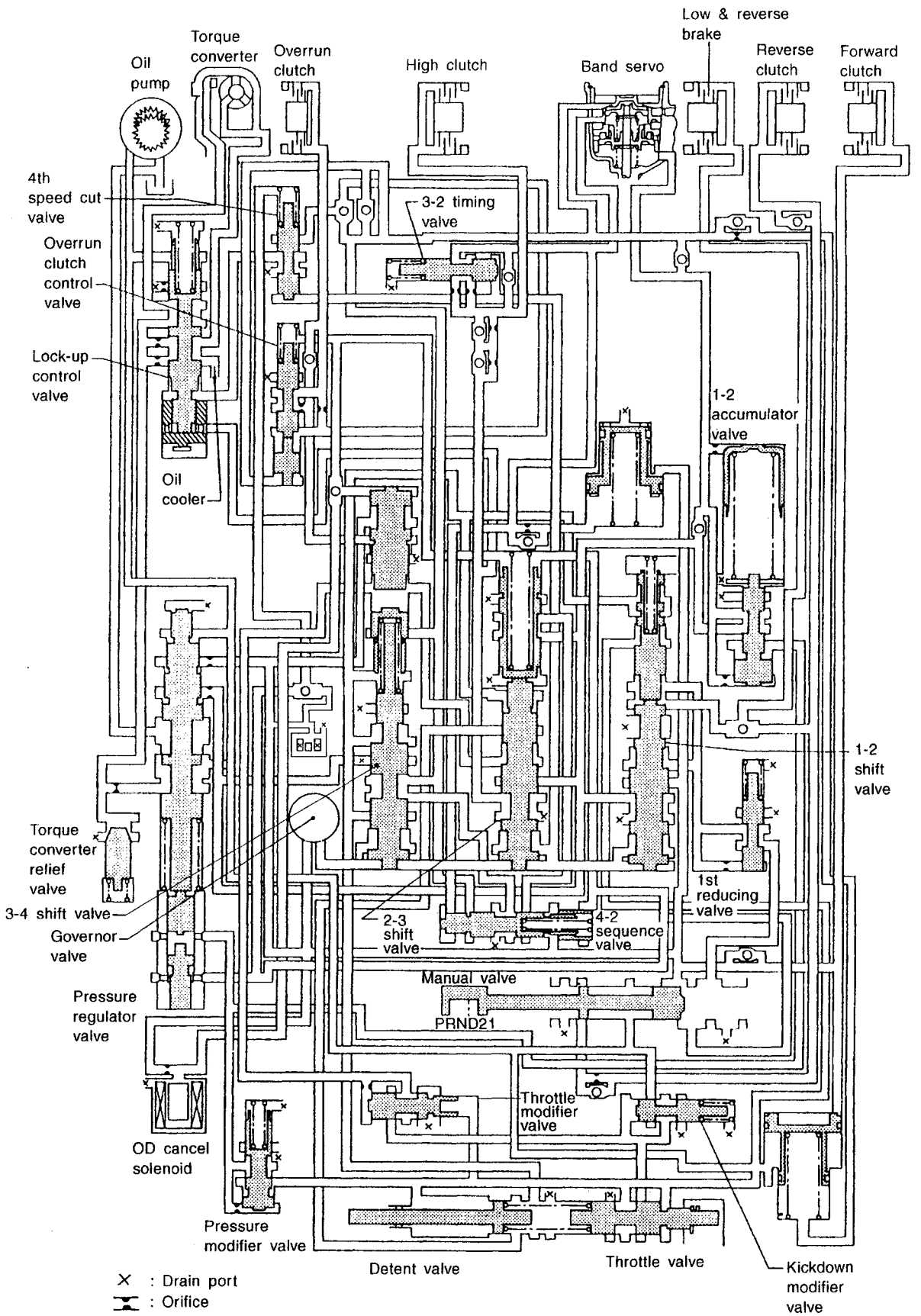

SAT197I

Simpo PDF Merge and Split Unregistered Version - http://www.simpopdf.com

Hydraulic Control Circuit (Cont'd)

MODEL 34X81

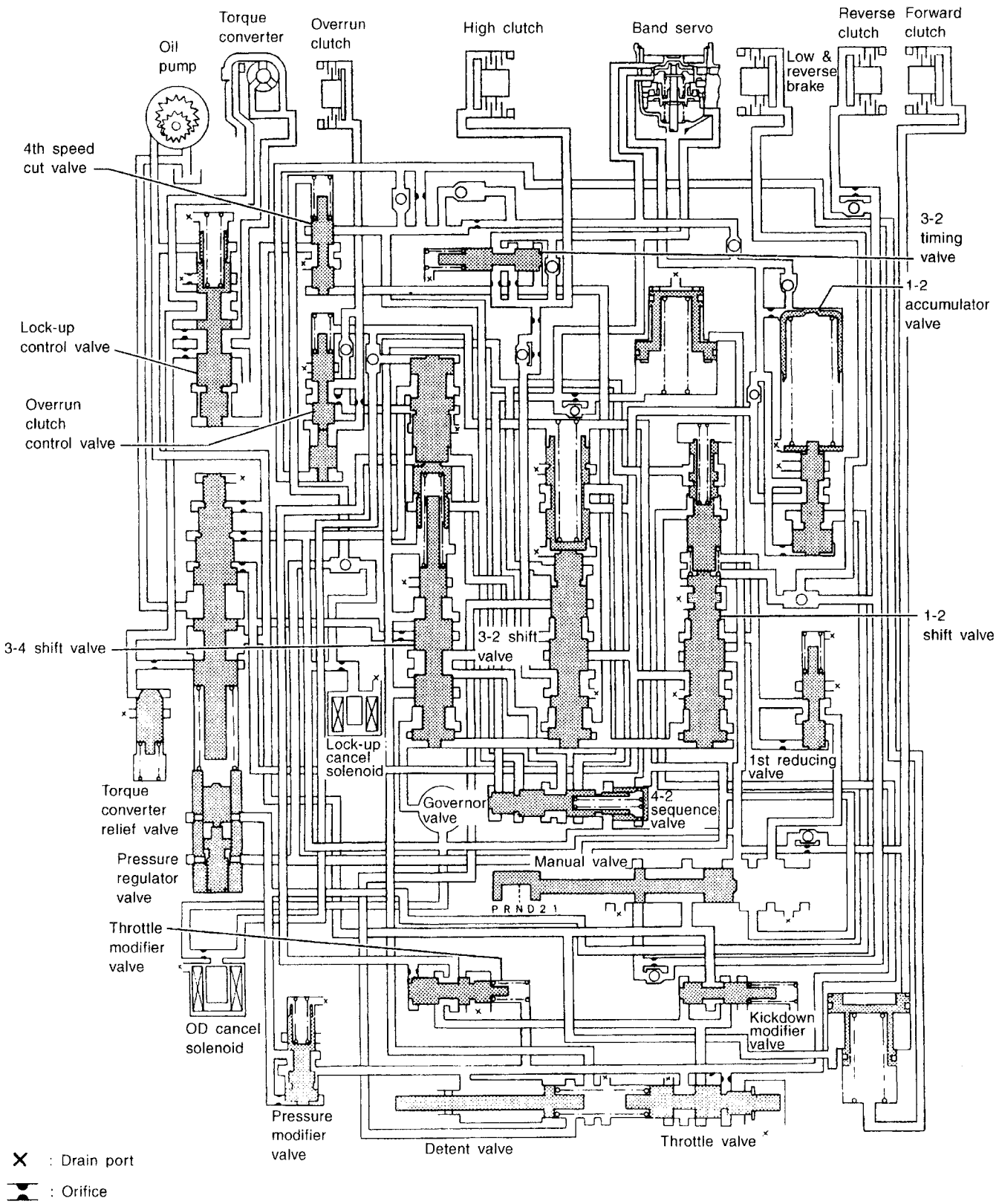

AT

SAT198I

Simpo PDF Merge and Split Unregistered Version - http://www.simpopdf.com

Shift Mechanism

CONSTRUCTION

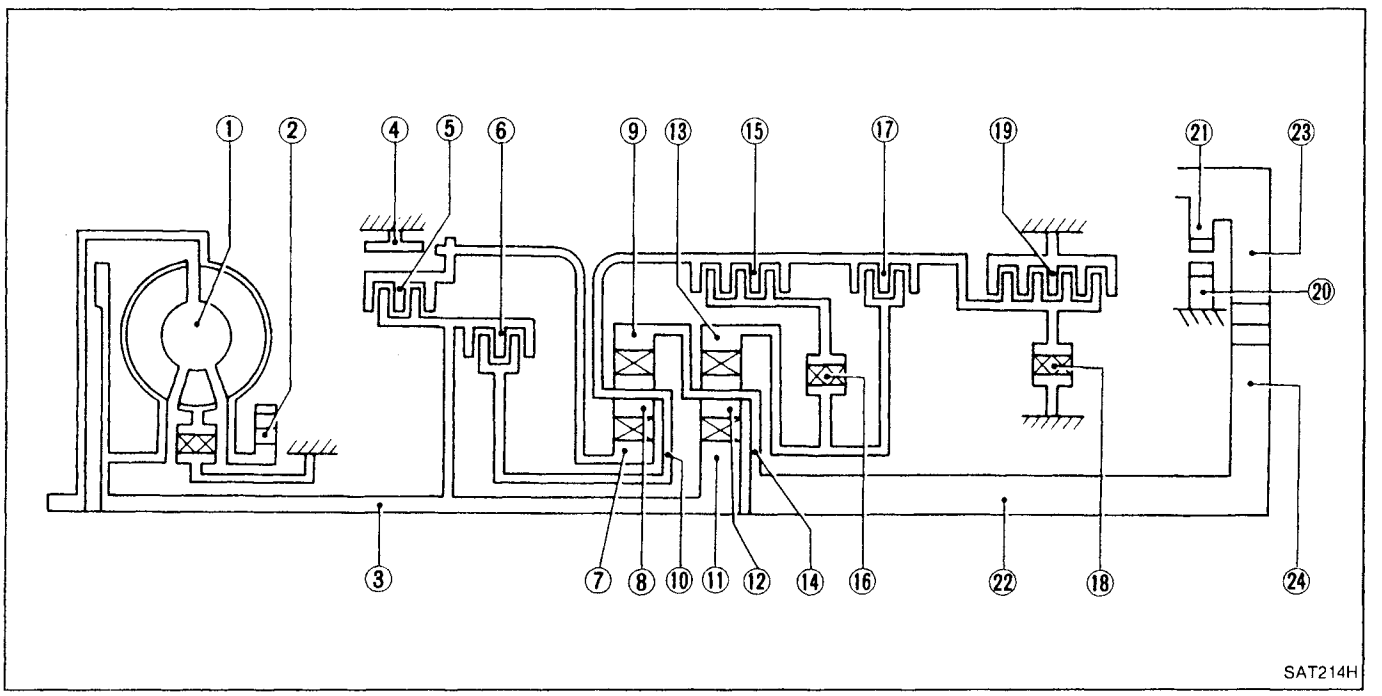

① Torque converter
② Oil pump
③ Input shaft
④ Brake band
⑤ Reverse clutch
⑥ High clutch
⑦ Front sun gear
⑧ Front pinion gear
⑨ Front internal gear
⑩ Front planetary carrier
⑪ Rear sun gear
⑫ Rear pinion gear
⑬ Rear internal gear
⑭ Rear planetary carrier
⑮ Forward clutch
⑯ Forward one-way clutch
⑰ Overrun clutch
⑱ Low one-way clutch
⑲ Low & reverse brake
⑳ Parking pawl
㉑ Parking gear
㉒ Output shaft
㉓ Idle gear
㉔ Output gear

FUNCTION OF CLUTCH AND BRAKE

Clutch and brake components	Abbr.	Function
Reverse clutch	R/C	To transmit input power to front sun gear
High clutch	H/C	To transmit input power to front planetary carrier
Forward clutch	F/C	To connect front planetary carrier with forward one-way clutch
Overrun clutch	O/C	To connect front planetary carrier with rear internal gear
Brake band	B/B	To lock front sun gear
Forward one-way clutch	F/O.C	When forward clutch is engaged, to stop rear internal gear from rotating in opposite direction against engine speed
Low one-way clutch	L/O.C	To stop front planetary carrier from rotating in opposite direction against engine speed
Low & reverse brake	L & R/B	To lock front planetary carrier

Simpo PDF Merge and Split Unregistered Version - http://www.simpopdf.com

Shift Mechanism (Cont'd)

OPERATION OF CLUTCH AND BRAKE

Shift position		Reverse clutch	High clutch	Forward clutch	Overrun clutch	Band servo 2nd apply	Band servo 3rd release	Band servo 4th apply	Forward one-way clutch	Low one-way clutch	Low & reverse brake	Lock-up	Remarks
P													PARK POSITION
R		○									○		REVERSE POSITION
N													NEUTRAL POSITION
D *4	1st			○	*1 ○				●	●			Automatic shift 1 ↔ 2 ↔ 3 ↔ 4
	2nd			○	*1 ○	○			●				
	3rd		○	○	*1 ○	*2 ⊗	⊗		●				
	4th		○	⊗		*3 ⊗	⊗	○				○	
2	1st			○	○				●	●			Automatic shift 1 ↔ 2
	2nd			○	○	○			●				
1	1st			○	○				●	●	○		Locks (held stationary) in 1st speed 1 ← 2
	2nd			○	○	○			●				

*1 : Operates when overdrive switch is set to "OFF".
*2 : Oil pressure is applied to both 2nd "apply" side and 3rd "release" side of band servo piston. However, brake band does not contract because oil pressure area on the "release" side is greater than that on the "apply" side.
*3 : Oil pressure is applied to 4th "apply" side in condition *2 above, and brake band contracts.
*4 : A/T will not shift to 4th when overdrive switch is set to "OFF" position.
○ : Operates.
● : Operates. During "progressive" acceleration.
⊗ : Operates but does not affect power transmission.

AT

Control System

CONTROL SYSTEM

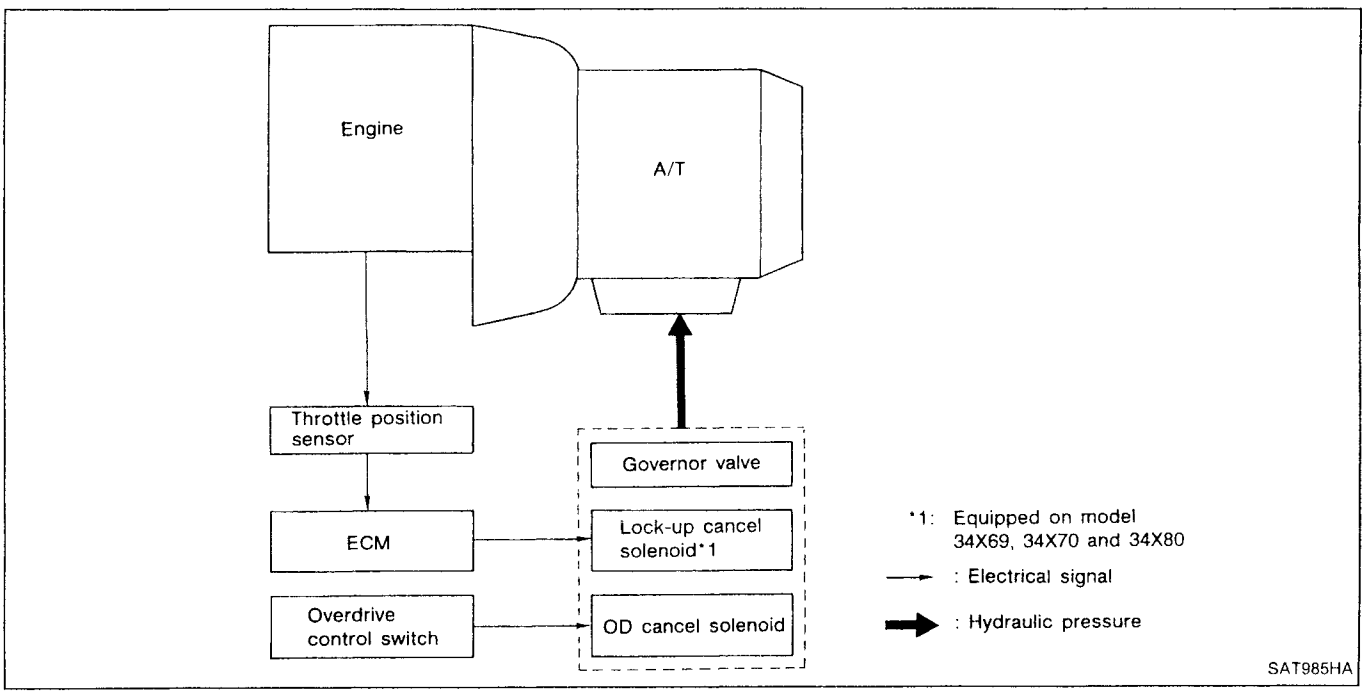

Simpo PDF Merge and Split Unregistered Version - http://www.simpopdf.com

NOTE

Simpo PDF Merge and Split Unregistered Version - http://www.simpopdf.com

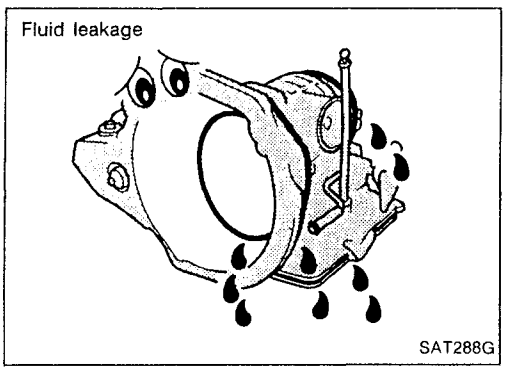

Preliminary Check (Prior to Road Testing)

A/T FLUID CHECK

Fluid leakage check

1. Clean area suspected of leaking, — for example, mating surface of converter housing and transmission case.
2. Start engine, apply foot brake, place selector lever in "D" position and wait a few minutes.
3. Stop engine.
4. Check for fresh leakage.

Fluid condition check

Fluid color	Suspected problem
Dark or black with burned odor	Wear of frictional material
Milky pink	Water contamination — Road water entering through filler tube or breather
Varnished fluid, light to dark brown and tacky	Oxidation — Over or under filling — Overheating

Fluid level check — Refer to MA section (CHASSIS AND BODY MAINTENANCE).

AT

Road Testing

Perform road tests using "Symptom" chart. Refer to page AT-20.

"P" POSITION

1. Place selector lever in "P" position and start engine. Stop engine and repeat the procedure in all positions, including neutral position.
2. Stop vehicle on a slight upgrade and place selector lever in "P" position. Release parking brake to make sure vehicle remains locked.

"R" POSITION

1. Manually move selector lever from "P" to "R", and note shift quality.
2. Drive vehicle in reverse long enough to detect slippage or other abnormalities.

"N" POSITION

1. Manually move selector lever from "R" and "D" to "N" and note shift quality.
2. Release parking brake with selector lever in "N" position. Lightly depress accelerator pedal to make sure vehicle does not move. (When vehicle is new or soon after clutches have been replaced, vehicle may move slightly. This is not a problem.)

Simpo PDF Merge and Split Unregistered Version - http://www.simpopdf.com

Road Testing (Cont'd)

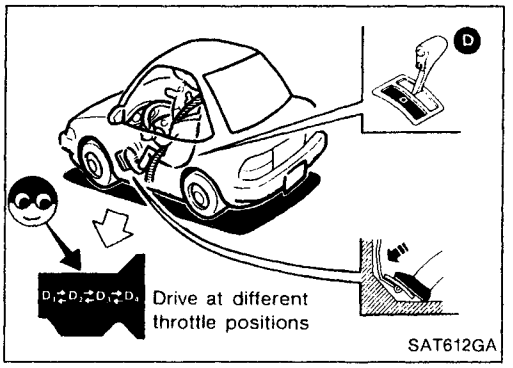

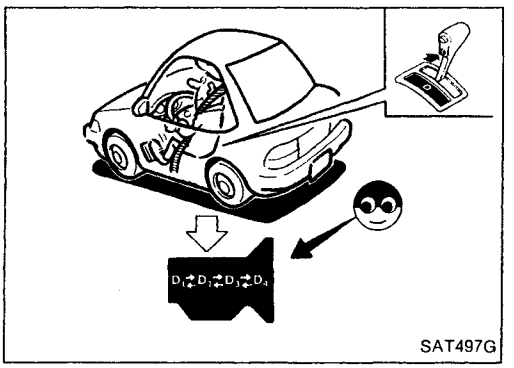

"D" POSITION

1. Manually move selector lever from "N" to "D" position, and note shift quality.
2. Using the shift schedule as a reference, drive vehicle in "D" position. Record, on symptom chart, respective vehicle speeds at which up-shifting and down-shifting occur. These speeds are to be read at three different throttle positions (light, half and full), respectively. Also determine the timing at which shocks are encountered during shifting and which clutches are engaged.
3. Determine whether lock-up properly occurs while driving vehicle in proper gear position and at proper vehicle speed.
4. Check to determine if shifting to overdrive gear cannot be made while OD control switch is "OFF".
5. Drive vehicle in "D_3" position at half to light throttle position. Keep driving at 60 to 70 km/h (34 to 43 MPH). Fully depress accelerator pedal to make sure transaxle downshifts from 3rd to 2nd gear.
6. Drive vehicle in "D_2" position at half to light throttle position. Keep driving at 25 to 35 km/h (16 to 22 MPH). Fully depress accelerator pedal to make sure transaxle downshifts from 2nd to 1st gear.

"2" POSITION

1. Shift to "2" position and make sure vehicle starts in 1st gear.
2. Increase vehicle speed to make sure transaxle upshifts from 1st to 2nd gear.
3. Further increase vehicle speed. Make sure transaxle does not upshift to 3rd gear.
4. Drive vehicle in "2_2" position at half to light throttle position. Keep driving at 25 to 35 km/h (16 to 22 MPH). Fully depress accelerator pedal to make sure transaxle downshifts from 2nd to 1st gear.
5. Allow vehicle to run idle while in "2" position to make sure that transaxle downshifts to 1st gear.
6. Move selector lever to "D" position and allow vehicle to operate at 30 to 40 km/h (19 to 25 MPH). Then, shift to "2" position to make sure transaxle downshifts to 2nd gear.

"1" POSITION

1. Place selector lever in "1" position and accelerate vehicle. Make sure transaxle does not shift from 1st to 2nd gear although vehicle speed increases.
2. Drive vehicle in "1" position. Release accelerator pedal to make sure that engine compression acts as a brake.
3. Place selector lever in "D" or "2" position and allow vehicle to run at 15 to 25 km/h (9 to 16 MPH). Then move selector lever to "1" position to make sure transaxle downshifts to 1st gear.

Simpo PDF Merge and Split Unregistered Version - http://www.simpopdf.com

Road Testing (Cont'd)

SHIFT SCHEDULE

Drive the vehicle for approx. 10 minutes. Measure the oil temperature. When the oil temperature becomes between 50 and 80°C (122 and 176°F), carry out this check.

VEHICLE SPEED WHEN SHIFTING GEARS

Model 34X68

Throttle position	Vehicle speed km/h (MPH)						
	$D_1 \rightarrow D_2$	$D_2 \rightarrow D_3$	$D_3 \rightarrow D_4$	$D_4 \rightarrow D_3$	$D_3 \rightarrow D_2$	$D_2 \rightarrow D_1$	$1_2 \rightarrow 1_1$
Full throttle	48 - 56 (30 - 35)	88 - 96 (55 - 60)	—	133 - 141 (83 - 88)	80 - 88 (50 - 55)	37 - 45 (23 - 28)	45 - 53 (28 - 33)
Half throttle	31 - 39 (19 - 24)	54 - 62 (34 - 39)	102 - 110 (63 - 68)	75 - 83 (47 - 52)	44 - 52 (27 - 32)	7 - 15 (4 - 9)	45 - 53 (28 - 33)

Model 34X69 and 34X70

Throttle position	Vehicle speed km/h (MPH)						
	$D_1 \rightarrow D_2$	$D_2 \rightarrow D_3$	$D_3 \rightarrow D_4$	$D_4 \rightarrow D_3$	$D_3 \rightarrow D_2$	$D_2 \rightarrow D_1$	$1_2 \rightarrow 1_1$
Full throttle	51 - 60 (32 - 37)	94 - 102 (58 - 63)	—	136 - 144 (85 - 89)	85 - 93 (53 - 58)	40 - 48 (25 - 30)	48 - 56 (30 - 35)
Half throttle	30 - 38 (19 - 24)	52 - 60 (32 - 37)	97 - 105 (60 - 65)	67 - 75 (42 - 47)	42 - 50 (26 - 31)	8 - 16 (5 - 10)	48 - 56 (30 - 35)

Model 34X80

Throttle position	Vehicle speed km/h (MPH)						
	$D_1 \rightarrow D_2$	$D_2 \rightarrow D_3$	$D_3 \rightarrow D_4$	$D_4 \rightarrow D_3$	$D_3 \rightarrow D_2$	$D_2 \rightarrow D_1$	$1_2 \rightarrow 1_1$
Full throttle	52 - 60 (32 - 37)	100 - 108 (62 - 67)	—	145 - 153 (90 - 95)	90 - 98 (56 - 61)	40 - 48 (25 - 30)	49 - 57 (30 - 35)
Half throttle	30 - 38 (19 - 24)	53 - 61 (33 - 38)	103 - 111 (64 - 69)	69 - 77 (43 - 48)	42 - 50 (26 - 31)	8 - 16 (5 - 10)	49 - 57 (30 - 35)

Model 34X81

Throttle position	Vehicle speed km/h (MPH)						
	$D_1 \rightarrow D_2$	$D_2 \rightarrow D_3$	$D_3 \rightarrow D_4$	$D_4 \rightarrow D_3$	$D_3 \rightarrow D_2$	$D_2 \rightarrow D_1$	$1_2 \rightarrow 1_1$
Full throttle	58 - 66 (36 - 41)	107 - 115 (66 - 71)	—	160 - 168 (99 - 104)	96 - 104 (60 - 65)	39 - 47 (24 - 29)	48 - 56 (30 - 35)
Half throttle	33 - 41 (21 - 25)	57 - 65 (35 - 40)	105 - 113 (65 - 70)	69 - 77 (43 - 48)	45 - 53 (28 - 33)	8 - 16 (5 - 10)	48 - 56 (30 - 35)

AT

Simpo PDF Merge and Split Unregistered Version - http://www.simpopdf.com

Road Testing (Cont'd)

ROAD TEST SYMPTOM CHART

Numbers are arranged in order of probability.
Perform inspections starting with number one and work up.
Circled numbers indicate that the transaxle must be removed from the vehicle.

: Valve expected to be malfunctioning

		ON VEHICLE														
		Oil level and oil quality	Control cable	Inhibitor switch and wiring	Throttle wire	Engine idling speed	Line pressure	Control valve	Throttle valve & detent valve	Manual valve	Pressure regulator valve	3-4 shift valve	2-3 shift valve	1-2 shift valve	Overrun clutch control valve	Pressure modifier valve
Sharp shocks in shifting from "N" to "D" position		1	2	.	5	3	4	7								
Shift shocks	When shifting from 1st to 2nd or 2nd to 3rd	1	2	.	4	.	3	6								
	When shifting from 3rd to 4th	1	2	.	4	.	3	5								
	When shifting from D to 2 and 1 position. When OD switch is set from "ON" to "OFF"	1	2	.	4	.	3	5								
	When shifting from 2nd to 1st in "1" position	1	2	.	4	.	3	5								
Shift slippage when upshifting	When shifting from 1st to 2nd	1	2	.	4	.	3	5								
	When shifting from 2nd to 3rd	1	2	.	4	.	3	6								
	When shifting from 3rd to 4th	1	2	.	4	.	3	5								
Shift slippage with accelerator pedal depressed	When shifting from 4th to 2nd	1	2	.	5	.	3	6								
	When shifting from 4th to 3rd	1	2	.	4	.	3	6								
	When shifting from 4th to 1st and shifting from 3rd to 1st	1	2	.	5	.	3	6								
Poor power/acceleration	When vehicle starts	1	2	.	4	.	3	6								
	When upshifting	1	2	.	4	.	3	7								
No engine braking	When shifting from "D" to "2" and "1" position	1	2	.	4	.	3	5								
	When OD switch is set from "ON" to "OFF"	1	2	.	4	.	3	7								
	When shifting from 2nd to 1st in "1" position	1	2	.	4	.	3	5								
Shift quality	Too low a gear change point from 2nd to 3rd and from 3rd to 2nd.	1	.	.	3	.	2	6								
	Too high a gear change point from 2nd to 3rd and from 3rd to 2nd.	1	.	.	3	.	2	6								
	Too low a gear change point from 2nd to 1st in "1" position.	1	.	.	3	.	2	6								
	Too high a gear change point from 2nd to 1st in "1" position.	1	.	.	3	.	2	6								

Simpo PDF Merge and Split Unregistered Version - http://www.simpopdf.com

Road Testing (Cont'd)

ON VEHICLE																	OFF VEHICLE										
Kickdown modifier valve	1-2 accumulator valve	3-2 timing valve	1st reducing valve	Torque converter relief valve	Throttle modifier valve	4th speed cut valve	Lock-up control valve	4-2 sequence valve	Governor pressure	Governor valve	OD cancel solenoid valve	Torque converter clutch solenoid valve	Accumulator servo release	Accumulator N-D	Ignition switch and starter motor	OD control switch and wiring	Torque converter	Oil pump	Reverse clutch	High clutch	Forward clutch	Forward one-way clutch	Overrun clutch	Low one-way clutch	Low & reverse clutch	Brake band	Parking components
									.	.	.	.	.	6	.	.	.	9	8	.	.	.	.	.	.	.	.
									.	.	.	.	5	.	.	.	.	8	.	.	.	.	.	.	.	7	.
									.	.	.	.	.	.	.	.	.	8	.	.	.	.	7	.	.	6	.
									.	.	.	.	.	.	.	.	.	.	.	8	.	.	7	.	.	6	.
									.	.	.	.	.	.	.	.	.	7	.	.	.	.	.	.	6	.	.
									.	.	.	.	.	.	.	.	.	7	.	.	.	.	.	.	.	6	.
									.	.	.	.	5	.	.	.	.	9	.	8	.	.	.	.	.	7	.
									.	.	.	.	.	.	.	.	.	8	.	7	.	.	.	.	.	6	.
									4	7	.	.	.	.	.	.	8	9	10	11	13	14	15	16	17	12	.
									.	.	.	.	5	.	.	.	.	7	.	8	.	.	10	.	11	9	.
									4	7	.	.	.	.	.	.	.	11	.	8	.	10	.	.	.	9	.
									.	.	.	.	.	5	.	.	.	9	.	7	8	.	.	.	.	.	.
									5	6	.	.	.	.	.	.	.	9	.	.	8	.	.	.	.	.	.
									.	.	.	.	.	.	.	.	.	.	.	.	.	.	6	.	.	.	.
									.	.	6	.	.	.	.	5	.	.	.	.	.	.	8	.	.	.	.
									.	.	.	.	.	.	.	.	.	.	.	.	.	.	6	.	7	.	.
									4	5	.	.	.	.	.	.	.	.	.	.	.	.	.	.	.	.	.
									4	5	.	.	.	.	.	.	.	.	.	.	.	.	.	.	.	.	.
									4	5	.	.	.	.	.	.	.	.	.	.	.	.	.	.	.	.	.
									4	5	.	.	.	.	.	.	.	.	.	.	.	.	.	.	.	.	.

AT

Simpo PDF Merge and Split Unregistered Version - http://www.simpopdf.com

Road Testing (Cont'd)

Numbers are arranged in order of probability.
Perform inspections starting with number one and work up.
Circled numbers indicate that the transaxle must be removed from the vehicle.

▨: Valve expected to be malfunctioning

		ON VEHICLE														
		Oil level and oil quality	Control cable	Inhibitor switch and wiring	Throttle wire	Engine idling speed	Line pressure	Control valve	Throttle valve & detent valve	Manual valve	Pressure regulator valve	3-4 shift valve	2-3 shift valve	1-2 shift valve	Overrun clutch control valve	Pressure modifier valve
Shift quality	Failure to change gear from 4th to 2nd with accelerator pedal depressed.	1	.	.	3	.	2	6	▨							
	Failure to change gear from 3rd to 2nd with accelerator pedal depressed.	1	.	.	3	.	2	6	▨				▨			
	Failure to change gear from 1st to 2nd in "D" and "2" position.	1	.	.	3	.	2	6	▨					▨		
	Vehicle does not start from "1st" in "D" and "2" position.	1	.	.	3	.	2	6	▨					▨		
	Failure to change gear to 3rd and 4th in "D" position.	1	.	.	3	.	2	6	▨			▨	▨			
	Changes gear to 1st directly when selector lever is set from "D" to "1" position.	1	.	.	3	.	2	6	▨					▨		
	Changes gear to 2nd in "1" position.	1	.	.	3	.	2	6	▨		▨					▨
Lock-up quality	Lock-up point is extremely high or low.	1	.	.	3	.	2	6	▨		▨					▨
	Torque converter does not lock-up.	1	.	.	3	.	2	7	▨		▨					▨
	Lock-up is not released when accelerator pedal is released.	1	.	.	.	.	.	2								
Engine does not start in "P" and "N" positions or engine starts in positions other than "P" and "N" positions.		.	2	3	.	.	.	.								
Vehicle moves with selector lever in "P" position.		.	1	.	.	.	.	.								

Simpo PDF Merge and Split Unregistered Version - http://www.simpopdf.com

Road Testing (Cont'd)

ON VEHICLE																OFF VEHICLE										
Kickdown modifier valve	1-2 accumulator valve	3-2 timing valve	1st reducing valve	Torque converter relief valve	Throttle modifier valve	4th speed cut valve	Lock-up control valve	4-2 sequence valve	Governor pressure	Governor valve	OD cancel solenoid valve	Torque converter clutch solenoid valve	Accumulator servo release	Accumulator N-D	Ignition switch and starter motor	OD control switch and wiring	Torque converter	Oil pump	Reverse clutch	High clutch	Forward clutch	Forward one-way clutch	Overrun clutch	Low one-way clutch	Low & reverse clutch	Brake band	Parking components
									4	5																	
									4	5																	
									4	5																	
									4	5																	
									4	5	7					8											
									4	5																	
									4	5																	
									4	5																	
									4	5		6					8										
												3					4										
															1												
																											2

AT

Simpo PDF Merge and Split Unregistered Version - http://www.simpopdf.com

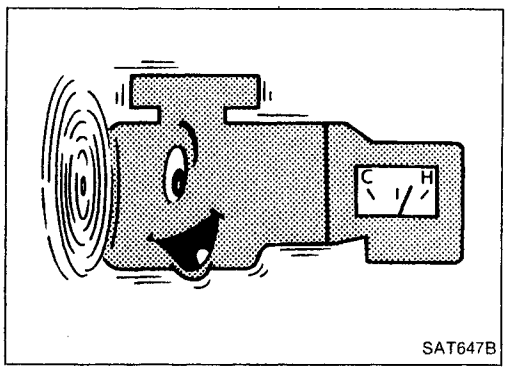

SAT647B

Stall Tasting

STALL TEST PROCEDURE

1. Check A/T and engine fluid levels. If necessary, add fluid.
2. Drive vehicle for about 10 minutes until engine oil and ATF reach operating temperature.
   ATF operating temperature:
   50 - 80°C (122 - 176°F)

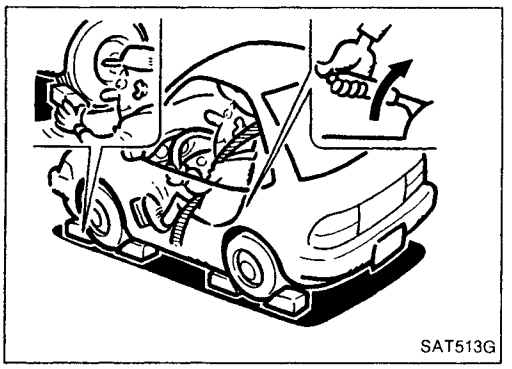
SAT513G

3. Set parking brake and block wheels.
4. Install a tachometer where it can be seen by driver during test.

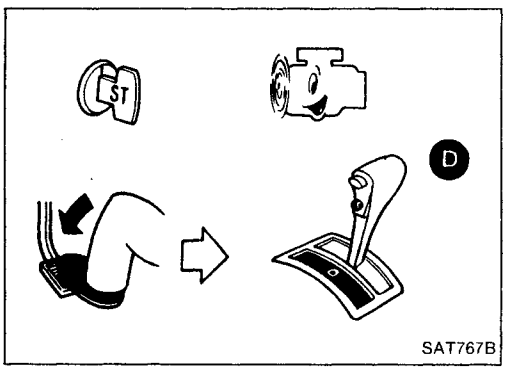

SAT767B

5. Start engine, apply foot brake, and place selector lever in "D" position.

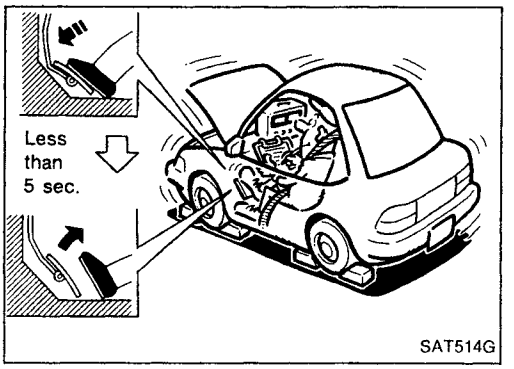

SAT514G

6. Accelerate to wide-open throttle gradually while applying foot brake.
7. Quickly note the engine stall revolution and immediately release throttle.

- **During test, never hold throttle wide-open for more than 5 seconds.**

Stall revolution standard:
Refer to SDS, AT-166.

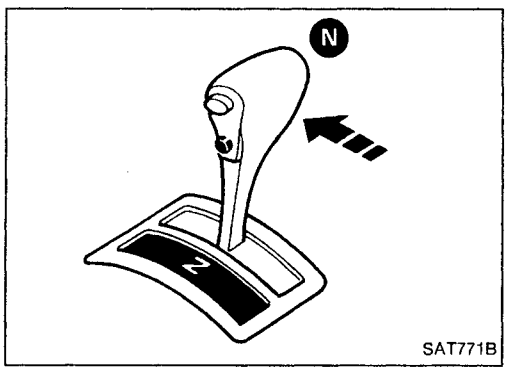

SAT771B

8. Move selector lever to "N" position.
9. Cool off ATF.

- **Run engine at idle for at least one minute.**

10. Repeat steps 5 through 9 with selector lever in "2", "1" and "R" positions.

Simpo PDF Merge and Split Unregistered Version - http://www.simpopdf.com

Stall Tasting (Cont'd)

JUDGEMENT OF STALL TEST

Selector lever position	Judgement		
D	H	O	L
2	H	O	L
1	H	O	L
R	O	H	L

O : Stall revolution is normal.
H : Stall revolution is higher than specified.
L : Stall revolution is lower than specified.

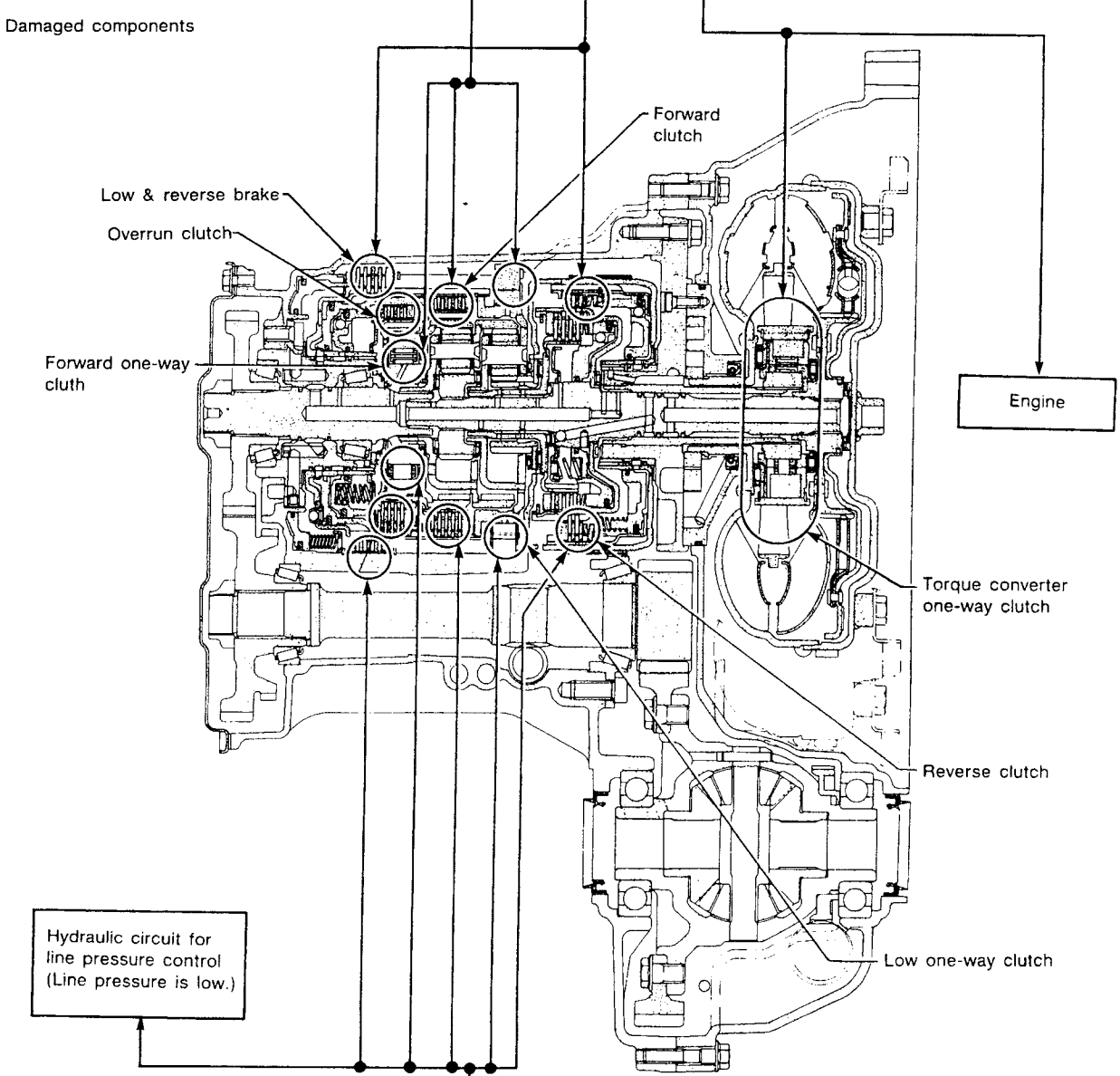

Selector lever position	Judgement	
D	H	O
2	H	O
1	H	O
R	H	O

Clutches and brakes except high clutch, brake band and overrun clutch are OK. (Condition of high clutch, brake band and overrun clutch cannot be confirmed by stall test.)

SAT871H

AT

Simpo PDF Merge and Split Unregistered Version - http://www.simpopdf.com

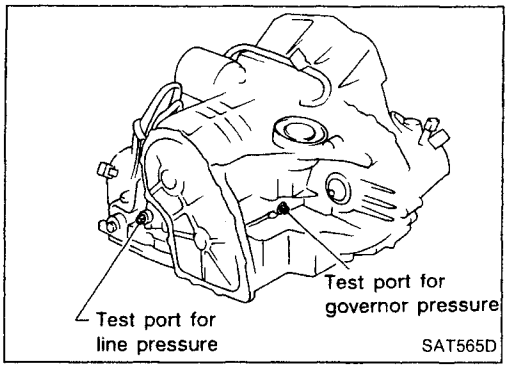

Pressure Testing

- Location of pressure test port.
- **Always replace pressure plugs as they are self-sealing bolts.**

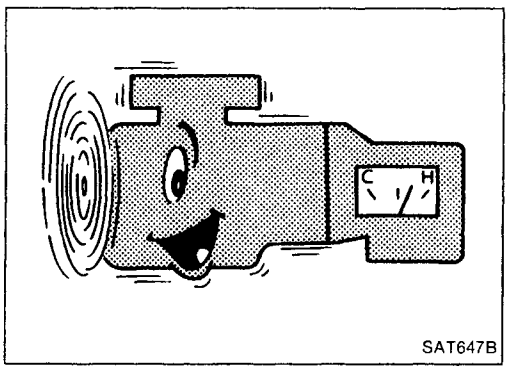

LINE PRESSURE TEST PROCEDURE

1. Check A/T and engine fluid levels. If necessary, add fluid.
2. Drive vehicle for about 10 minutes until engine oil and ATF reach operating temperature.
   ATF operating temperature:
   50 - 80°C (122 - 176°F)

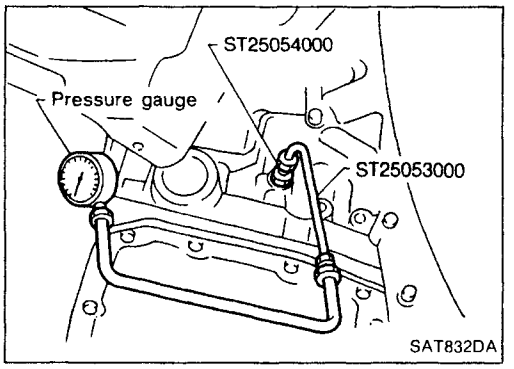

3. Install pressure gauge to line pressure port.

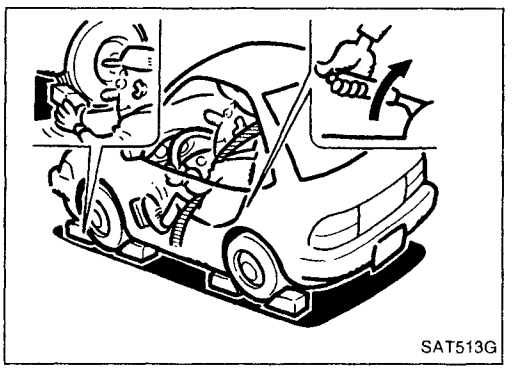

4. Set parking brake and block wheels.
   Continue to depress brake pedal fully while performing line pressure test at stall speed.

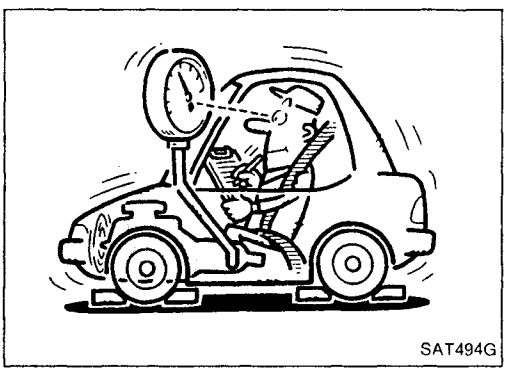

5. Start engine and measure line pressure at idle and stall speed.
   Line pressure:
   Refer to SDS, AT-166.

JUDGEMENT OF LINE PRESSURE TEST

- **If line pressure does not rise, first check to make sure that throttle wire is connected properly.**

1) When line pressure while idling is low at all positions ("D", "2", "1", "R" and "P"), the problem may be due to:

- Wear on interior of oil pump

Simpo PDF Merge and Split Unregistered Version - http://www.simpopdf.com

Pressure Testing (Cont'd)

- Oil leakage at or around oil pump, control valve body, transmission case or governor
- Sticking pressure regulator valve
- Sticking pressure modifier valve

2) When line pressure while idling is low at a particular position, check the following.

- If oil leaks at or around low & reverse brake circuit, line pressure becomes low in "R" position. But line pressure is normal in "P", "D", "2" or "1" position.

3) When line pressure is high while idling, pressure regulator valve may have stuck.

GOVERNOR PRESSURE TESTING

1. Check A/T and engine fluid levels. If necessary, add fluid.
2. Drive vehicle for about 10 minutes until engine oil and ATF reach operating temperature.

ATF operating temperature:
50 - 80°C (122 - 176°F)

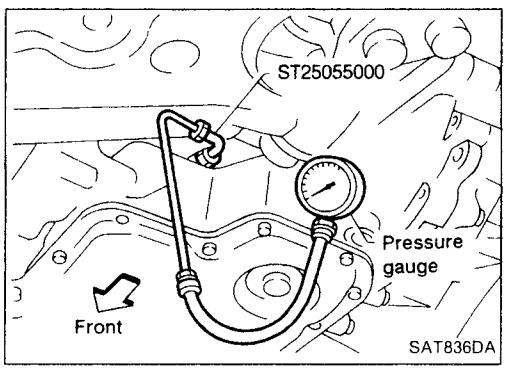

3. Install pressure gauge to governor pressure port.

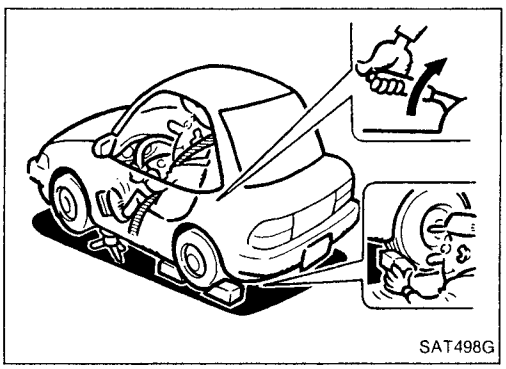

4. Set parking brake and block rear wheels.
5. Jack up front wheels.
6. Set selector lever in D position and drive vehicle.

Be careful of rotating wheels.

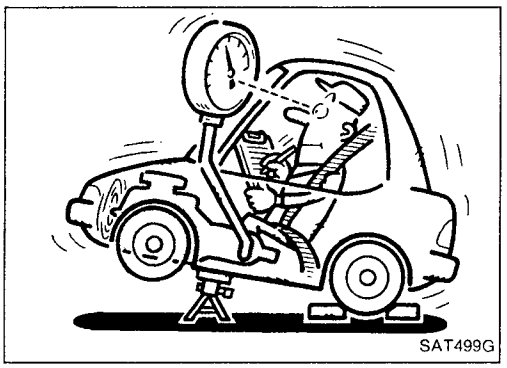

Governor pressure:

- **Governor pressure is not generated when vehicle is stopped. (front wheels are not rotating.)**
- **Governor pressure rises gradually in response to vehicle speed. (front wheel rotating speed.)**

If not, check governor valve assembly. Refer to AT-36.

Simpo PDF Merge and Split Unregistered Version - http://www.simpopdf.com

Wiring Diagram — AT —

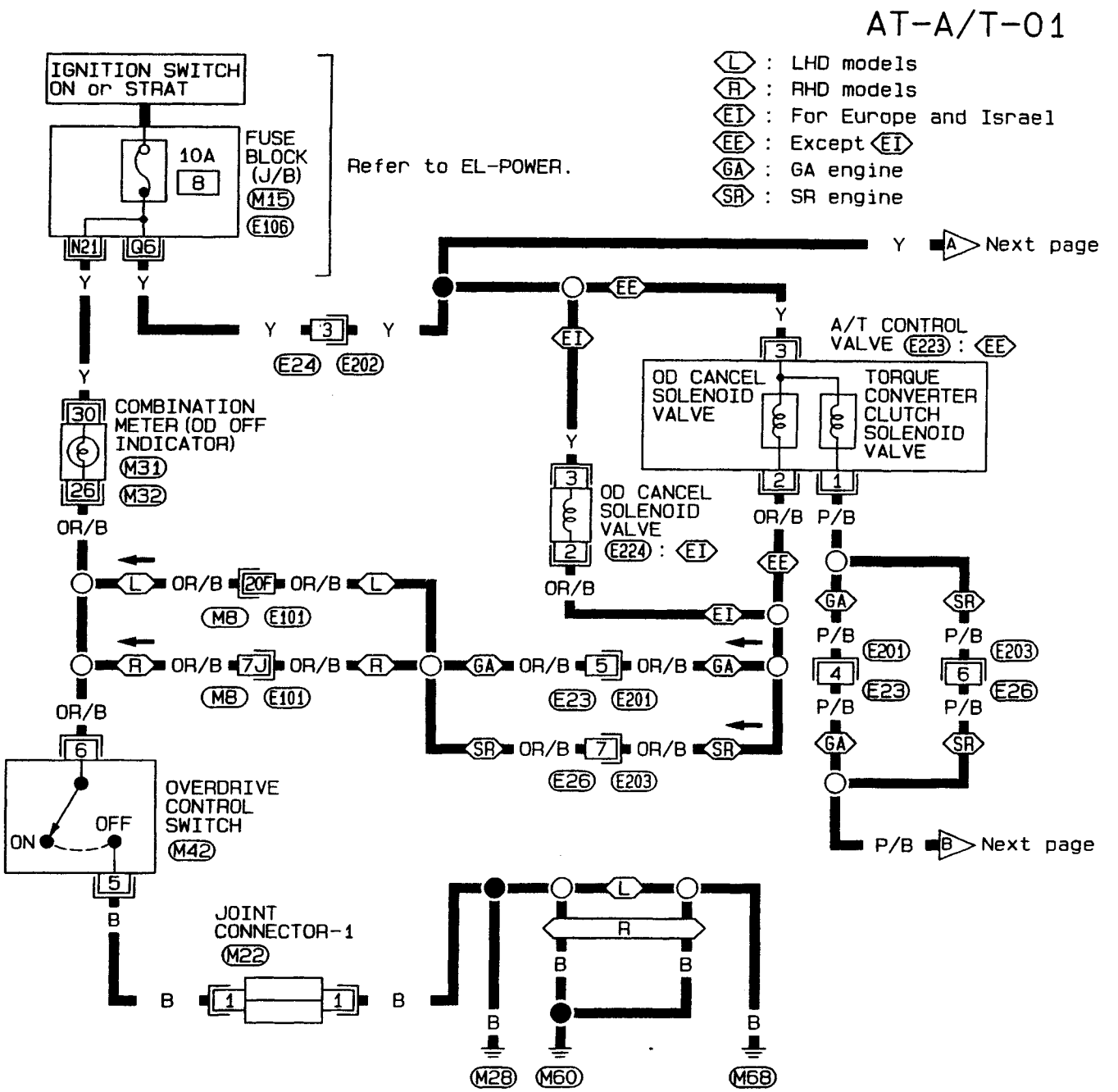

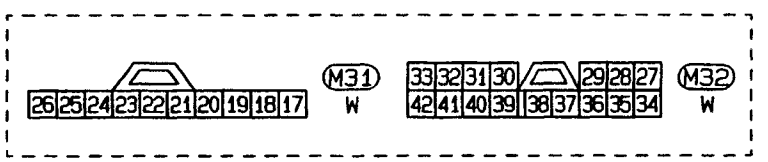

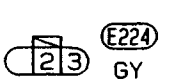



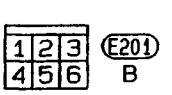

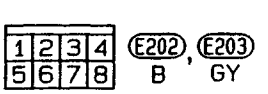

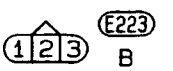

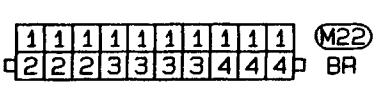

Refer to last page (Foldout page).

M8, E101

M15, E106

HAT001

Simpo PDF Merge and Split Unregistered Version - http://www.simpopdf.com

Wiring Diagram — AT — (Cont'd)

AT-A/T-02

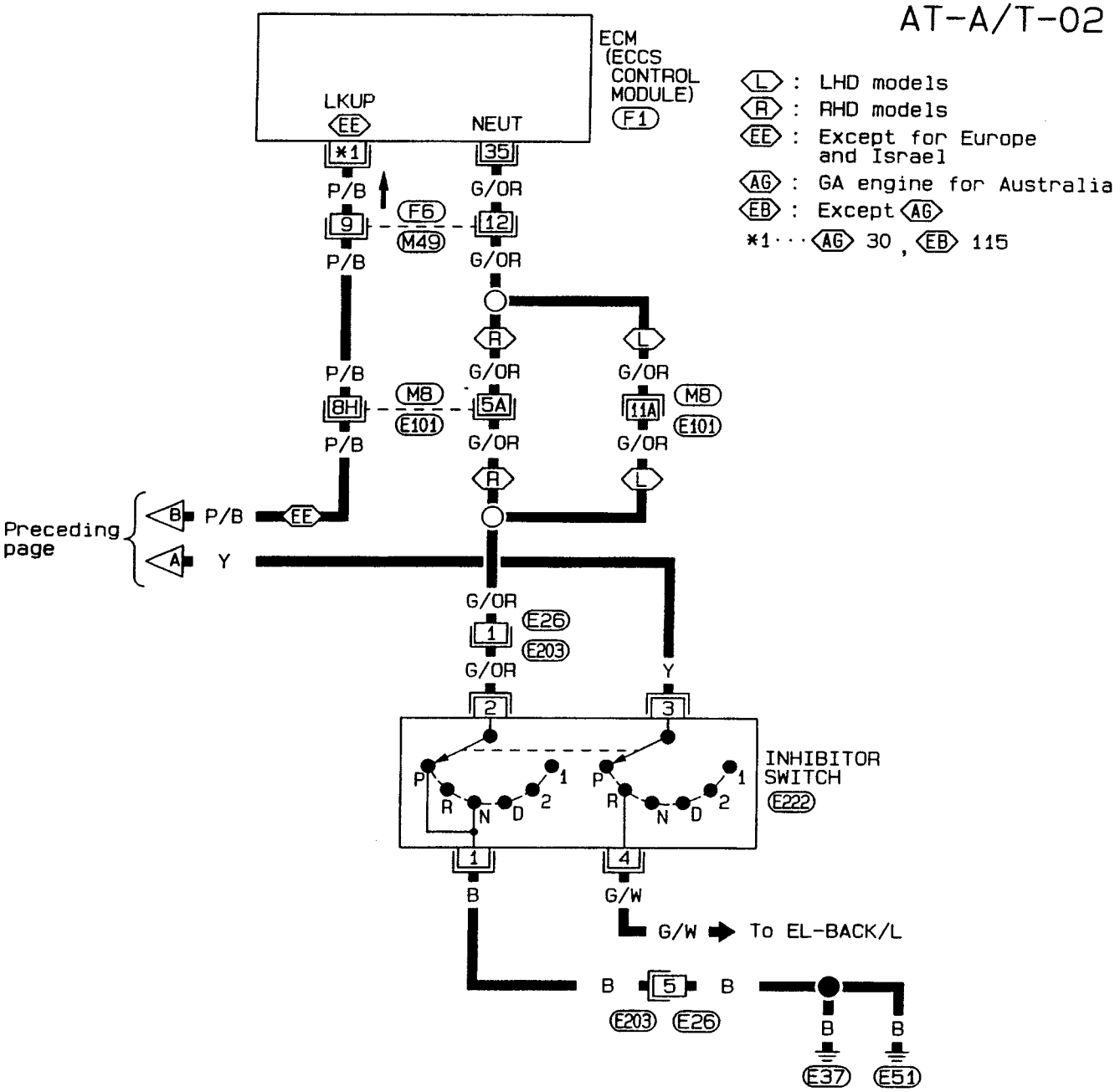

L : LHD models
R : RHD models
EE : Except for Europe and Israel
AG : GA engine for Australia
EB : Except AG
*1 ··· AG 30 , EB 115

AT

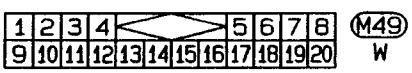

M49 W

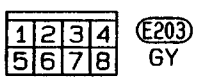

E203 GY



E222 GY

Refer to last page (Foldout page).
M8 , E101
F1

HAT002

Simpo PDF Merge and Split Unregistered Version - http://www.simpopdf.com

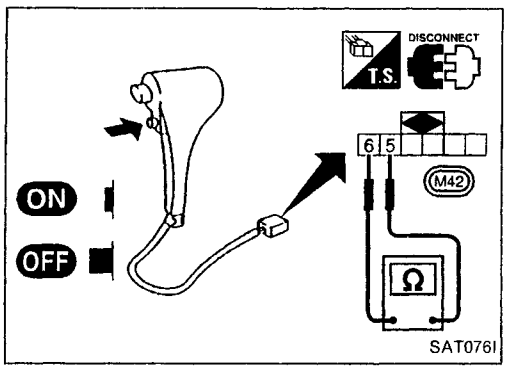

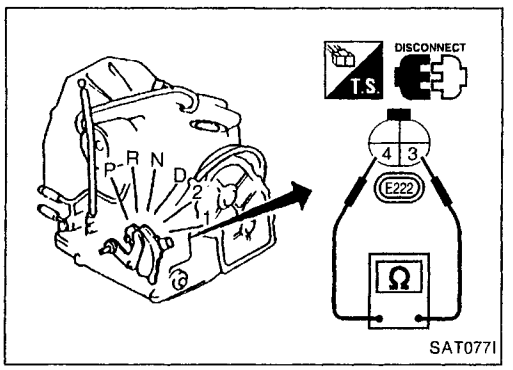

Electrical Components Inspection

OVERDRIVE CONTROL SWITCH

- Check continuity between two terminals.

OD switch position	Continuity
ON	No
OFF	Yes

INHIBITOR SWITCH

- Check continuity in "N", "P" and "R" positions.
- With manual shaft held in "N" position, turn manual shaft an equal amount in both directions to see if current flow positions are nearly the same. (When manual lever is in each position, continuity normally exists within 1.5° in either direction.) If current flows outside normal position, or if normal flow position is out of specifications, properly adjust inhibitor switch.

Position	Terminal No.	Continuity
Park/neutral position	③—④	No
Reverse position	③—④	Yes

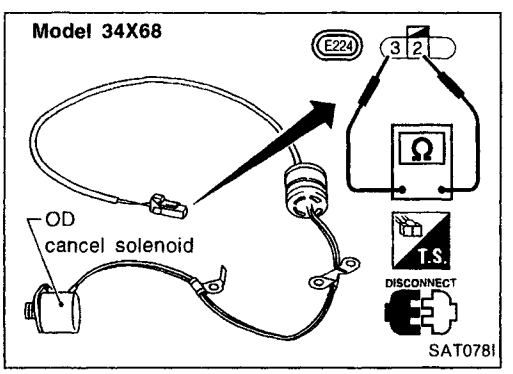

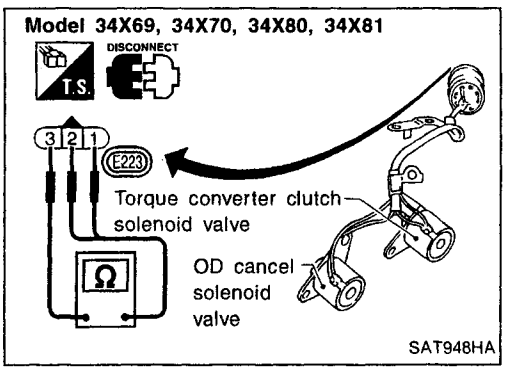

OD CANCEL SOLENOID VALVE AND TORQUE CONVERTER CLUTCH SOLENOID VALVE

- Check resistance between terminals.

Solenoids	Terminal No.	Resistance
OD cancel solenoid valve	②—③	Approximately 25Ω
Torque converter clutch solenoid valve	①—③	

Simpo PDF Merge and Split Unregistered Version - http://www.simpopdf.com

Control Valve Assembly and Accumulator

REMOVAL

1. Drain ATF from transaxle.

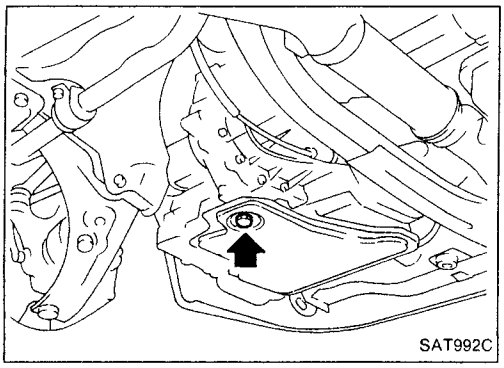
SAT992C

2. Remove oil pan and gasket.

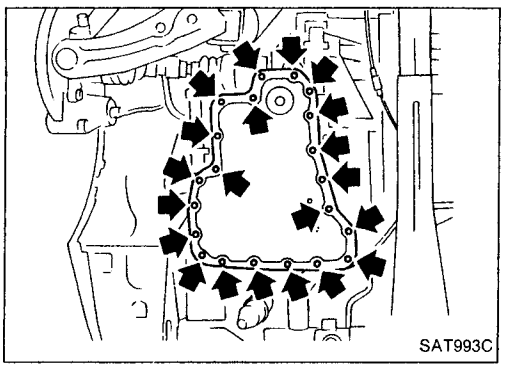
SAT993C

3. Disconnect A/T solenoid harness connector.

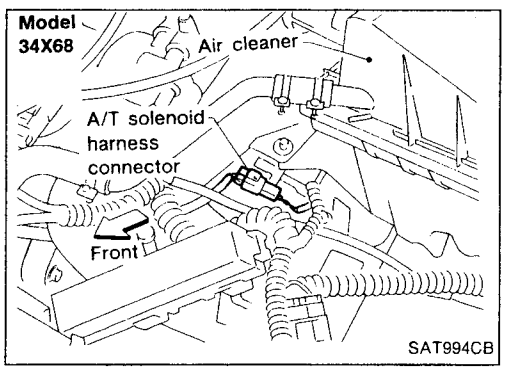

SAT994CB

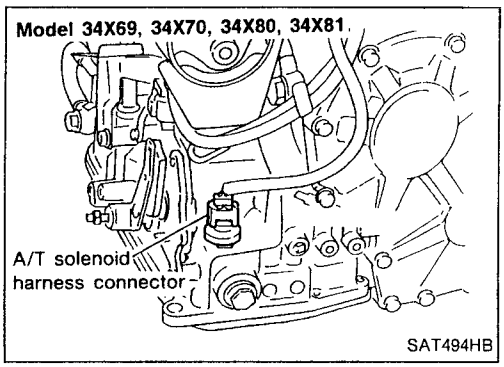

SAT494HB

4. Remove stopper ring from A/T solenoid harness terminal body.
5. Pull out A/T solenoid harness from transmission case by pushing terminal body.

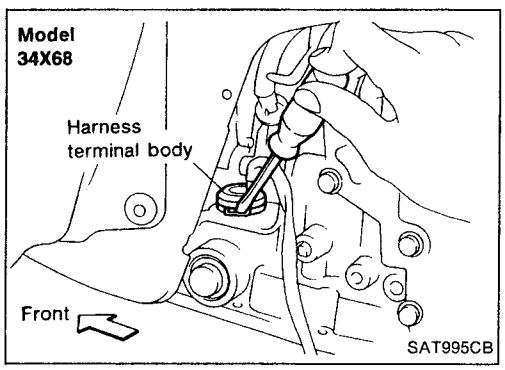

SAT995CB

Simpo PDF Merge and Split Unregistered Version - http://www.simpopdf.com

Control Valve Assembly and Accumulator (Cont'd)

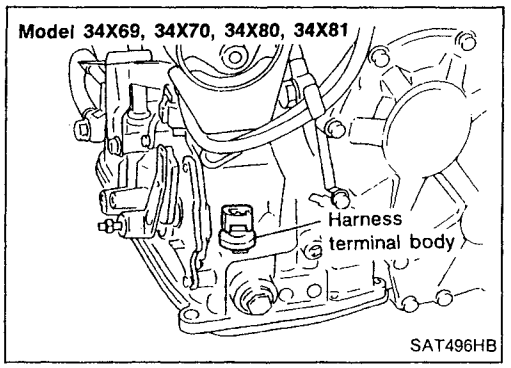

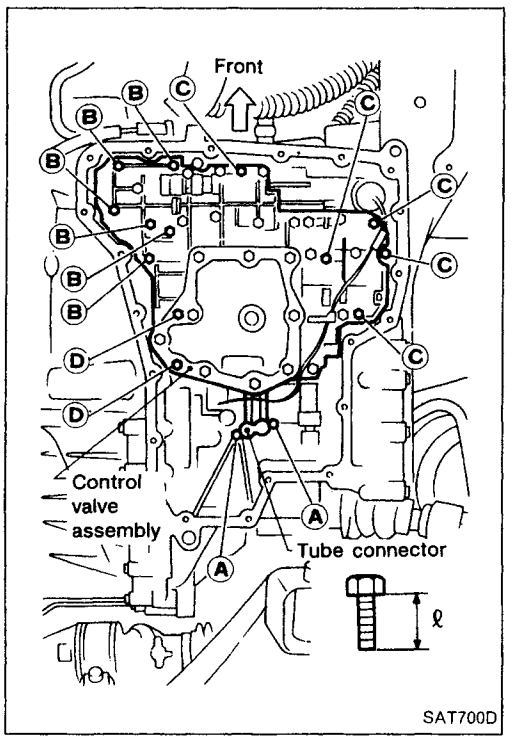

6. Remove control valve assembly by removing fixing bolts.

Bolt length, number and location:

Bolt symbol	Ⓐ	Ⓑ	Ⓒ	Ⓓ
Bolt length "ℓ" mm (in)	25.0 (0.984)	33.0 (1.299)	40.0 (1.575)	43.5 (1.713)
Number of bolts	2	6	5	2
Tightening torque N·m (kg-m, in-lb)	7 - 9 (0.7 - 0.9, 61 - 78)			

- **Be careful not to drop manual valve, tube connector, tubes and 3-R accumulator return spring.**

7. Disassemble and inspect control valve assembly if necessary — Refer to "REPAIR FOR COMPONENT PARTS", AT-74.

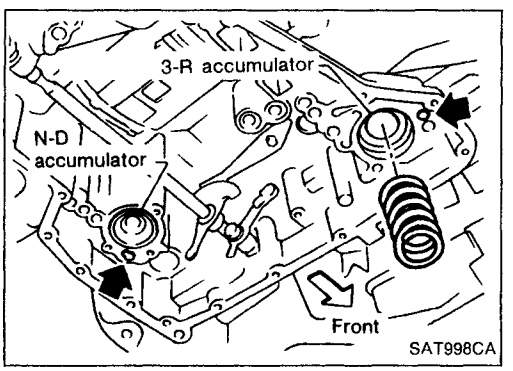

8. Remove 3-R and N-D accumulators by applying compressed air if necessary.
- **Hold each piston with a rag.**

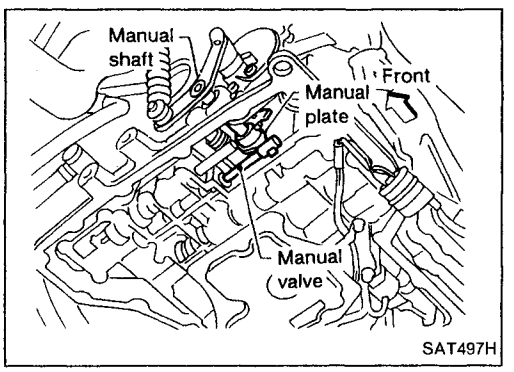

INSTALLATION

- **Set manual shaft in Neutral position, then align manual plate with groove in manual valve.**
- **After installing control valve assembly, make sure that selector lever can be moved to all positions.**

Simpo PDF Merge and Split Unregistered Version - http://www.simpopdf.com

Throttle Wire Adjustment

SEC. 319

Model 34X68, 34X69

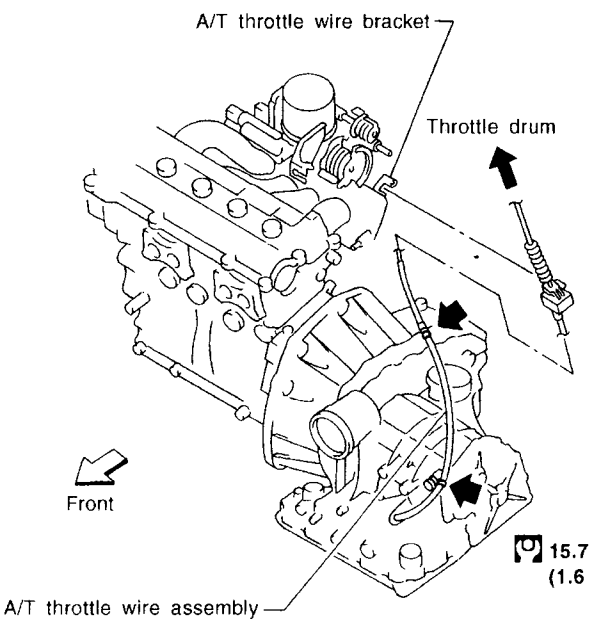

Model 34X70

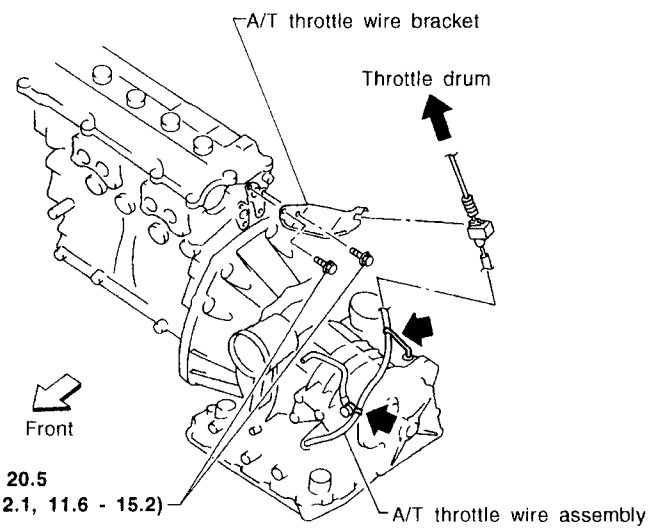

Model 34X81

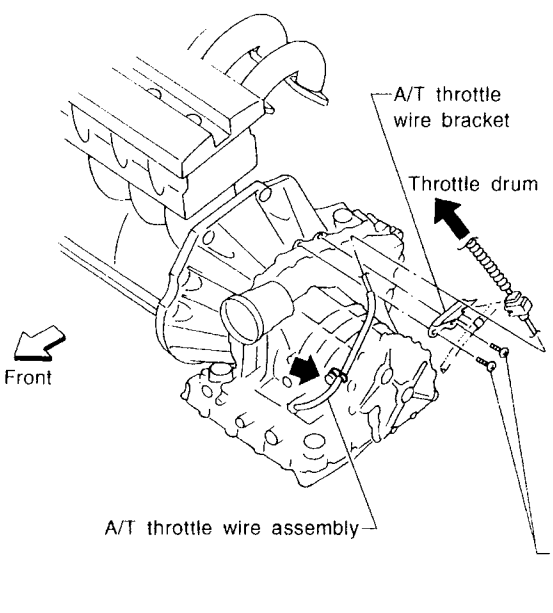

Model 34X80

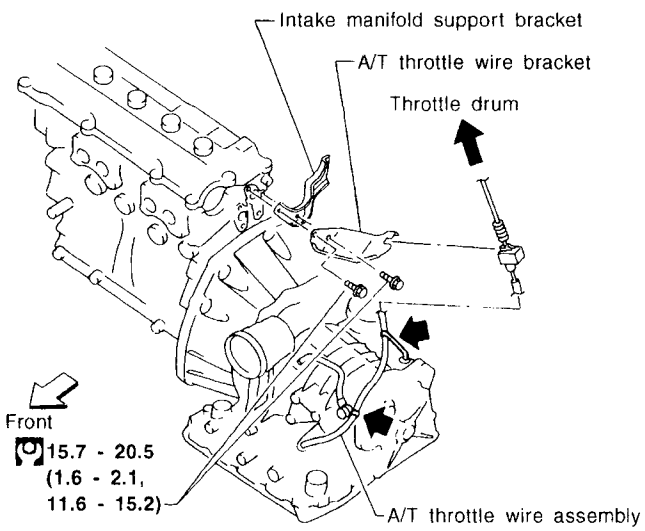

: N•m (kg-m, in-lb)
: N•m (kg-m, ft-lb)

SAT079I

AT

Simpo PDF Merge and Split Unregistered Version - http://www.simpopdf.com

Throttle Wire Adjustment (Cont'd)

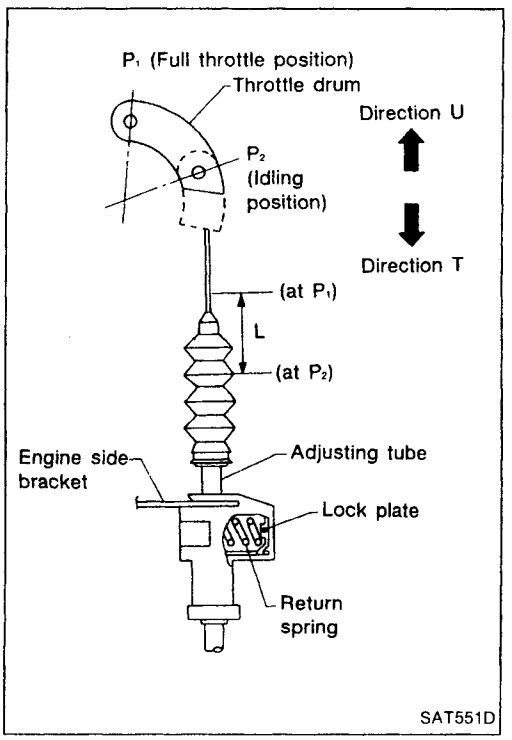

1. Turn ignition switch to OFF.
2. While pressing lock plate, move adjusting tube in direction "T" (Transaxle side).
3. Return lock plate.
   (Adjusting tube is locked at this time.)
4. Move throttle drum from "P_2" to "P_1" quickly. Adjusting tube moves in direction "U" (Engine side) while depressing the lock plate. Ensure that throttle wire stroke "L" is within the specified range, between full throttle and idle.
   Throttle wire stroke "L":
   40 - 42 mm (1.57 - 1.65 in)

- **Adjust throttle wire stroke after accelerator wire is installed and adjusted.**
- **When connecting throttle wire to throttle drum, do not use tools. Manually hook it.**
- **Put mark on throttle wire to facilitate measuring wire stroke.**

5. Clamp throttle wire at proper positions shown in the illustration after adjusting throttle wire.
6. After properly adjusting and clamping throttle wire, ensure the parting line is as straight as possible.

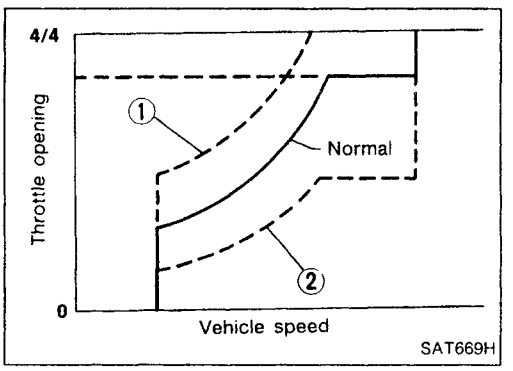

If throttle wire stroke is improperly adjusted the following problems may arise.

- "P_1" is the throttle drum fully-open position. When "P_1" is too far in direction "T", the shift schedule will be ② in the figure. And the kickdown range will greatly increase.
- When "P_1" is too far in direction "U", the shift schedule will be ① in the figure. And the kickdown will not occur.

Simpo PDF Merge and Split Unregistered Version - http://www.simpopdf.com

Control Cable Installation and Adjustment

- Move selector lever from the "P" range to the "1" range. You should be able to feel the detents in each range.
- The control cable needs adjustment in the following cases:
  1) When the detents cannot be felt;
  2) When the pointer indicating the range is improperly aligned.
- Always adjust control cable when it is removed from selector lever or manual shaft.

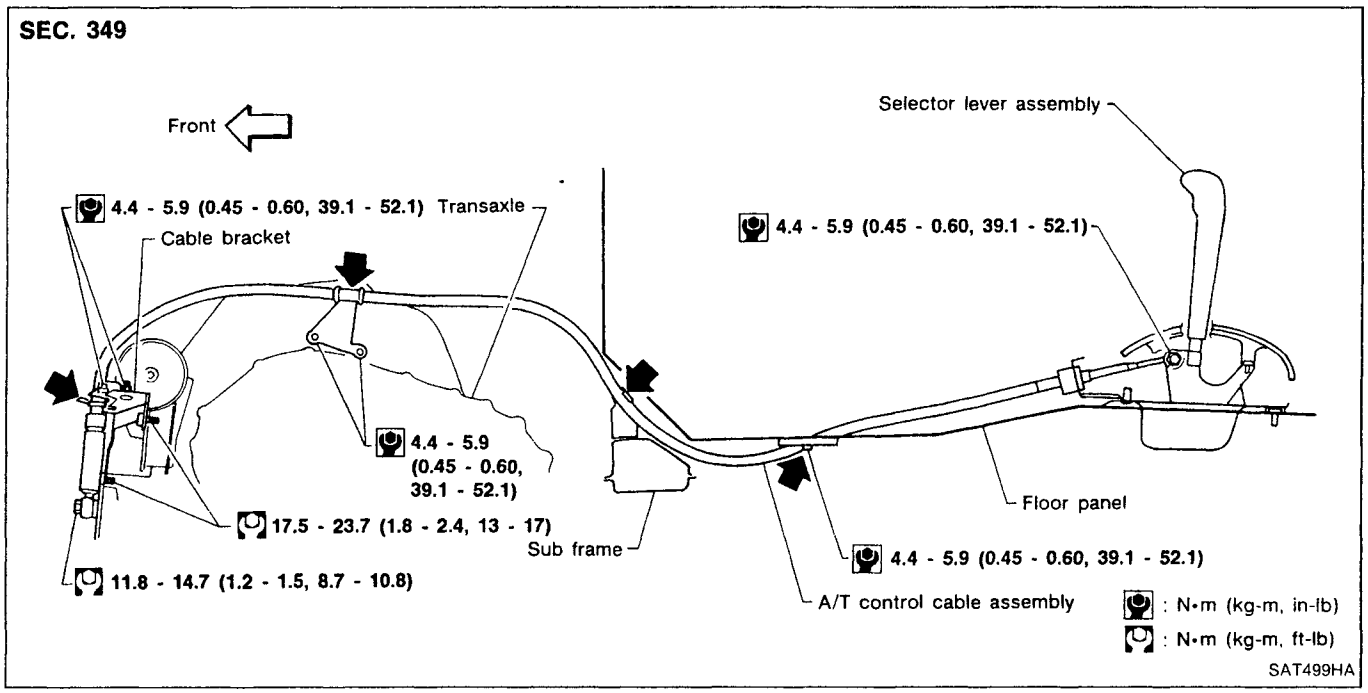

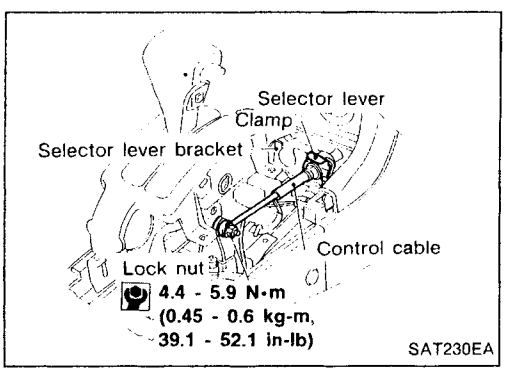

INSTALLATION

1. Place selector lever and manual shaft at "P" position.
2. Connect control cable to selector lever and tighten control cable lock nut. Clamp control cable to selector lever bracket.

AT

Simpo PDF Merge and Split Unregistered Version - http://www.simpopdf.com

Control Cable Installation and Adjustment (Cont'd)

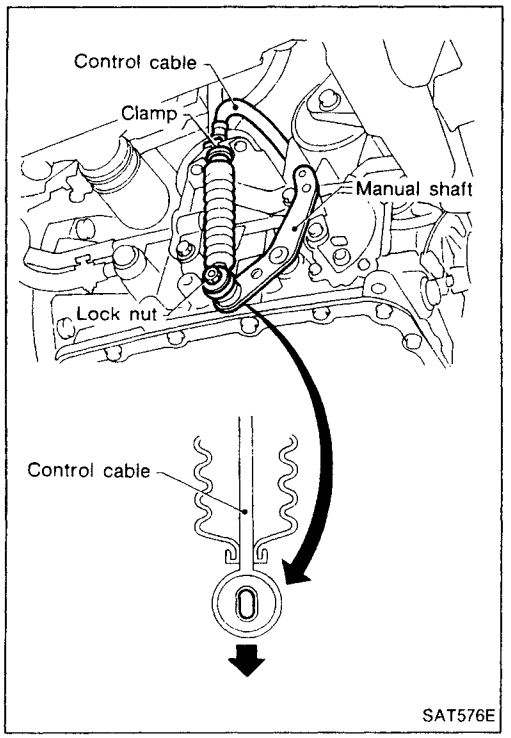

3. Connect control cable to manual shaft and clamp control cable to bracket at transaxle.
4. Pull control cable in the direction of the arrow shown in the illustration by specified force.
   Specified force: 6.9 N (0.7 kg, 1.5 lb)
5. Return control cable in the opposite direction of the arrow for 1.0 mm (0.039 in).
6. Tighten control cable lock nut.
7. Move selector lever from "P" position to "1" position. Make sure that selector lever can be moved smoothly without any sliding noise.
8. Apply grease to contacting areas of selector lever and control cable. Install any part removed.

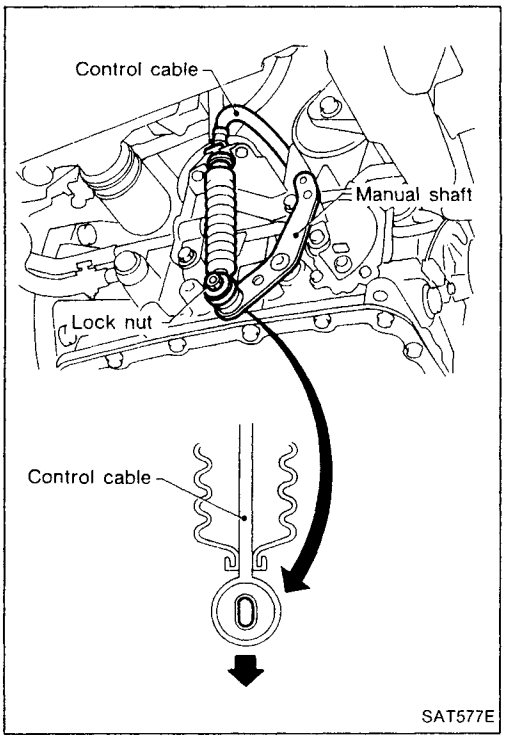

ADJUSTMENT

1. Loosen control cable lock nut at transaxle side.
2. Place selector lever and manual shaft at "P" position.
3. Pull control cable in the direction of the arrow shown in the illustration by specified force.
   Specified force: 6.9 N (0.7 kg, 1.5 lb)
4. Return control cable in the opposite direction of the arrow for 1.0 mm (0.039 in).
5. Tighten control cable lock nut.
6. Move selector lever from "P" position to "1" position. Make sure that selector lever can be moved smoothly without any sliding noise.
7. Apply grease to contacting areas of selector lever and control cable.

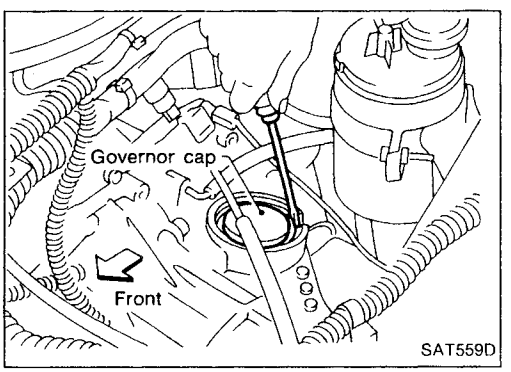

Governor Valve

1. Remove air duct.
2. Remove governor cap snap ring.
3. Remove governor cap.

Simpo PDF Merge and Split Unregistered Version - http://www.simpopdf.com

Governor Valve (Cont'd)

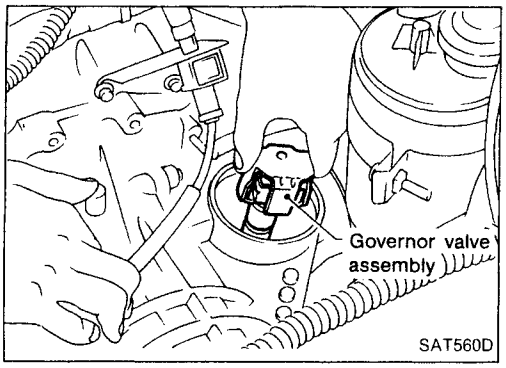

4. Remove governor valve assembly from transaxle.
5. Check governor valve assembly if necessary — Refer to "DISASSEMBLY", AT-65.

Inhibitor Switch Adjustment

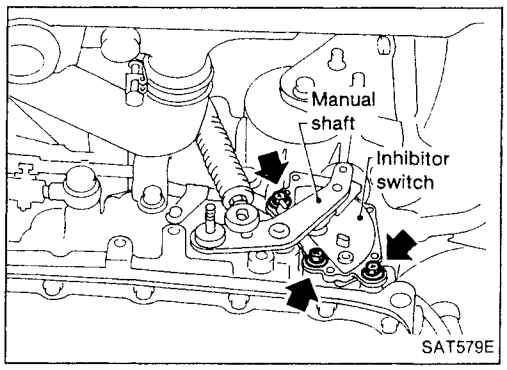

1. Remove control cable end from manual shaft.
2. Set manual shaft in "N" position.
3. Loosen inhibitor switch fixing bolts.

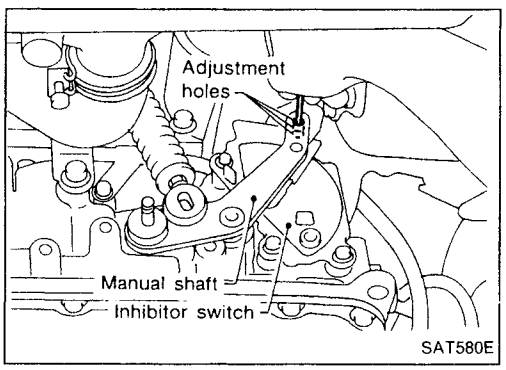

4. Use a 4 mm (0.16 in) pin for this adjustment.
   a. Insert the pin straight into the manual shaft adjustment hole.
   b. Rotate inhibitor switch until the pin can also be inserted straight into hole in inhibitor switch.
5. Tighten inhibitor switch fixing bolts.
6. Remove pin from adjustment hole after adjusting inhibitor switch.
7. Reinstall any part removed.
8. Adjust control cable — Refer to "Control Cable Installation and Adjustment", AT-35.
9. Check continuity of inhibitor switch — Refer to "Electrical Components Inspection", AT-30.

AT

Differential Side Oil Seal Replacement

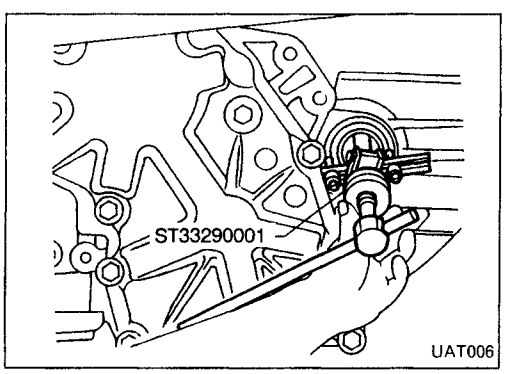

1. Remove drive shaft assemblies. — Refer to FA section ("Removal", "FRONT AXLE — Drive Shaft").
2. Remove oil seals.

Simpo PDF Merge and Split Unregistered Version - http://www.simpopdf.com

Differential Side Oil Seal Replacement (Cont'd)

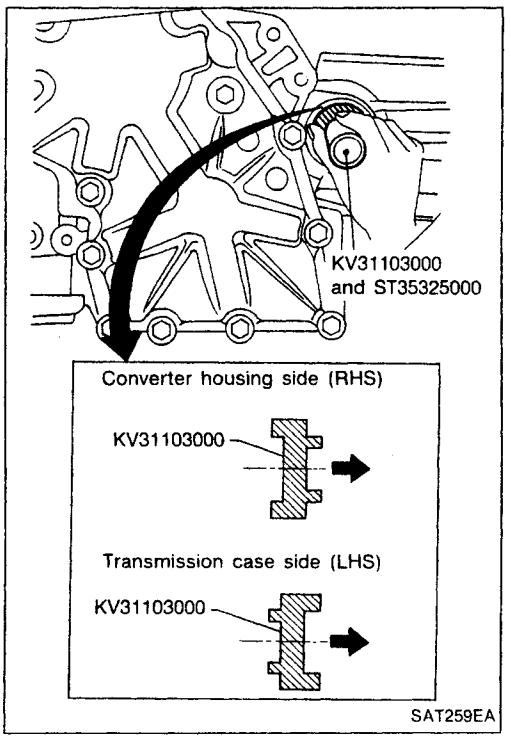

3. Install oil seals.
- **Apply ATF to oil seal surface before installing.**

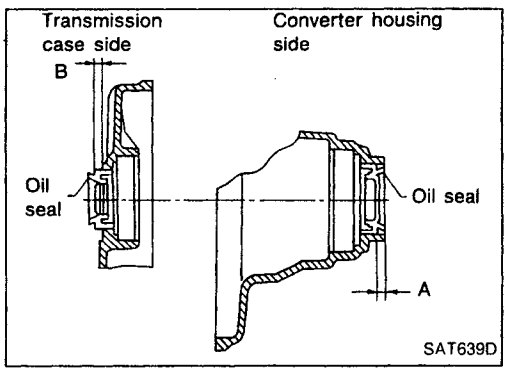

- **Install oil seals so that dimensions "A" and "B" are within specifications.**

Unit: mm (in)

A	B
5.5 - 6.5 (0.217 - 0.256)	0.5 (0.020) or less

4. Reinstall any part removed.

Simpo PDF Merge and Split Unregistered Version - http://www.simpopdf.com

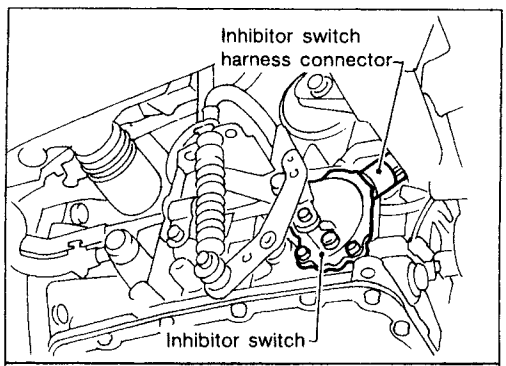

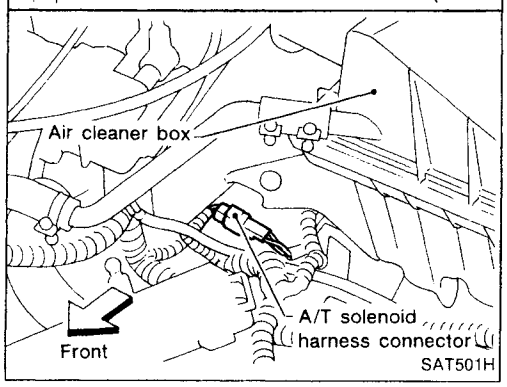

Removal

- Remove battery and bracket.
- Remove air duct.
- Disconnect A/T solenoid harness connector, inhibitor switch harness connector and speedometer pinion harness connector.
- Disconnect throttle wire at engine side.
- Drain ATF.
- Remove undercover and side cover.
- Disconnect control cable from transaxle.
- Disconnect oil cooler hoses.

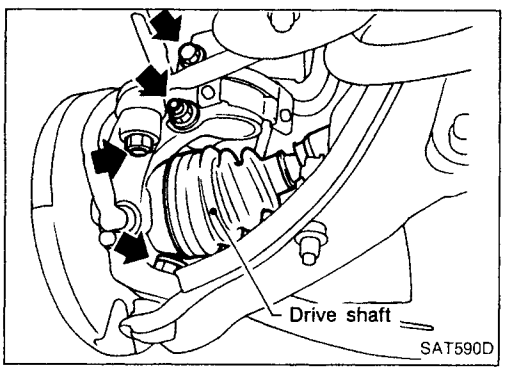

- Remove drive shafts — Refer to FA section ("Removal", "FRONT AXLE — Drive Shaft").
- Remove exhaust front tube.
- Remove starter motor from transaxle.

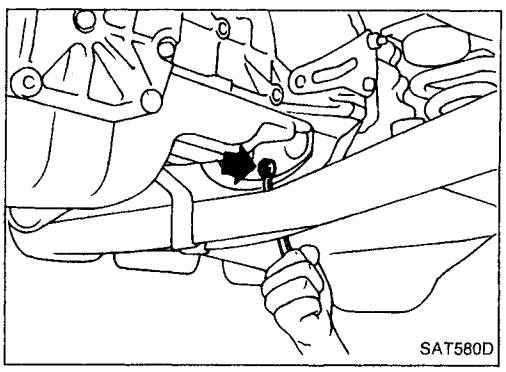

- Remove front and rear gussets and engine rear plate.
- Remove bolts securing torque converter to drive plate.

Rotate crankshaft for access to securing bolts.

- Support engine by placing a jack under oil pan.

Do not place jack under oil pan drain plug.

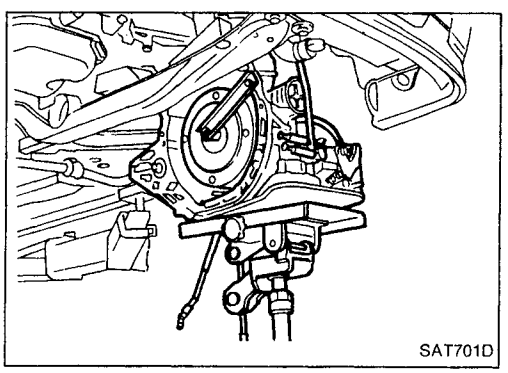

- Support transaxle with a jack.
- Remove LH and rear mountings from transaxle.
- Remove bolts fixing A/T to engine.
- Lower transaxle while supporting it with a jack.

AT

Simpo PDF Merge and Split Unregistered Version - http://www.simpopdf.com

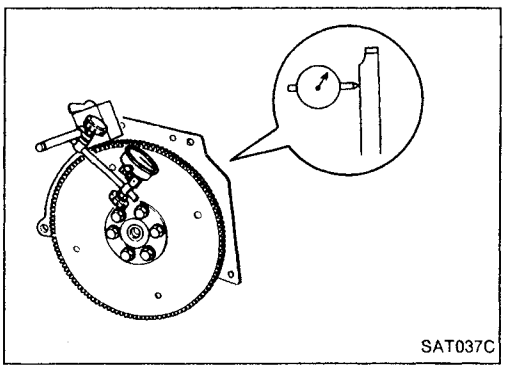
SAT037C

Installation

- Drive plate runout
  Maximum allowable runout:
  Refer to EM section ("Inspection", "CYLINDER BLOCK").
  If this runout is out of allowance, replace drive plate with ring gear.

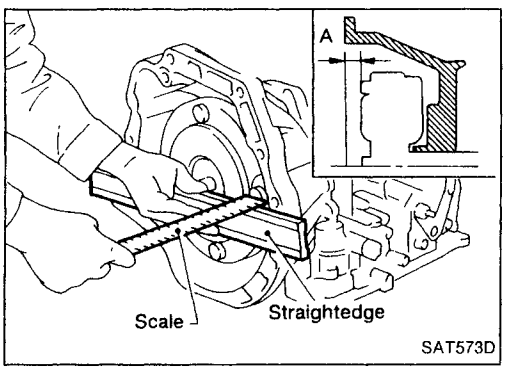

SAT573D

- When connecting torque converter to transaxle, measure distance "A" to be certain that they are correctly assembled.
  Distance "A":
  Except model 34X81
  21.1 mm (0.831 in) or more
  Model 34X81
  15.9 mm (0.626 in) or more

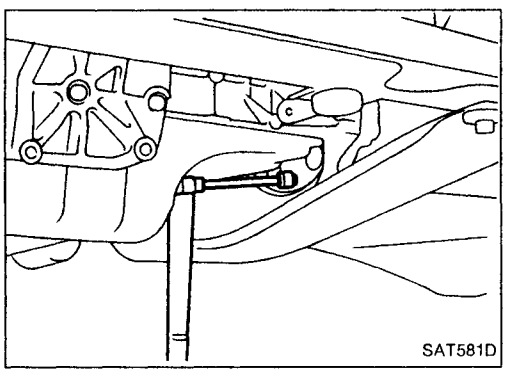
SAT581D

- Install converter to drive plate.
- **With converter installed, rotate crankshaft several turns to check that transaxle rotates freely without binding.**

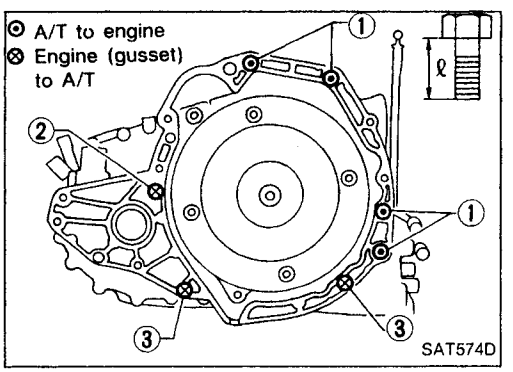

SAT574D

- Tighten bolts fixing transaxle

GA engine models

Bolt No.	Tightening torque N·m (kg-m, ft-lb)	Bolt length "ℓ" mm (in)
①	30 - 40 (3.1 - 4.1, 22 - 30)	50 (1.97)
②	30 - 40 (3.1 - 4.1, 22 - 30)	30 (1.18)
③	16 - 21 (1.6 - 2.1, 12 - 15)	25 (0.98)
Front gusset to engine	30 - 40 (3.1 - 4.1, 22 - 30)	20 (0.79)
Rear gusset to engine	16 - 21 (1.6 - 2.1, 12 - 15)	16 (0.63)

Simpo PDF Merge and Split Unregistered Version - http://www.simpopdf.com

Installation (Cont'd)

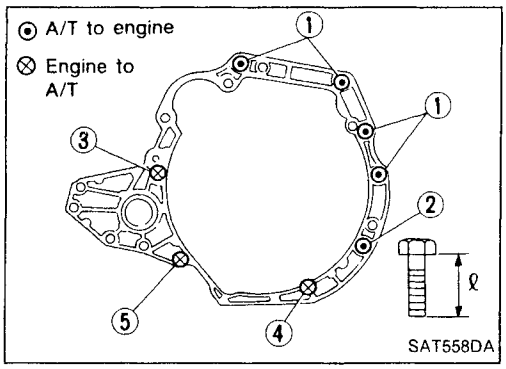

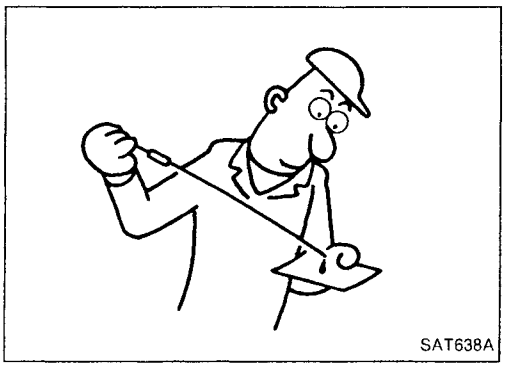

SR engine models

Bolt No.	Tightening torque N·m (kg-m, ft-lb)	Bolt length "ℓ" mm (in)
①	70 - 79 (7.1 - 8.1, 51 - 59)	55 (2.17)
②	70 - 79 (7.1 - 8.1, 51 - 59)	50 (1.97)
③	70 - 79 (7.1 - 8.1, 51 - 59)	65 (2.56)
④	30 - 40 (3.1 - 4.1, 22 - 30)	25 (0.98)
⑤	30 - 40 (3.1 - 4.1, 22 - 30)	40 (1.57)

- Reinstall any part removed.
- Adjust throttle wire and control cable. Refer to "ON-VEHICLE SERVICE", AT-33, 35.
- Check inhibitor switch. Refer to "Electrical Components Inspection", AT-30.
- Refill transaxle with ATF and check fluid level, AT-17.
- Move selector lever through all positions to be sure that transaxle operates correctly. With parking brake applied, idle engine. More selector lever through "N" to "D", to "2", to "1" and "R". A slight shock should be felt through the hand gripping the selector each time the transaxle is shifted.
- Perform road test — Refer to "ROAD TESTING", AT-17.

Simpo PDF Merge and Split Unregistered Version - http://www.simpopdf.com

All Models

SEC. 311•313•327•381

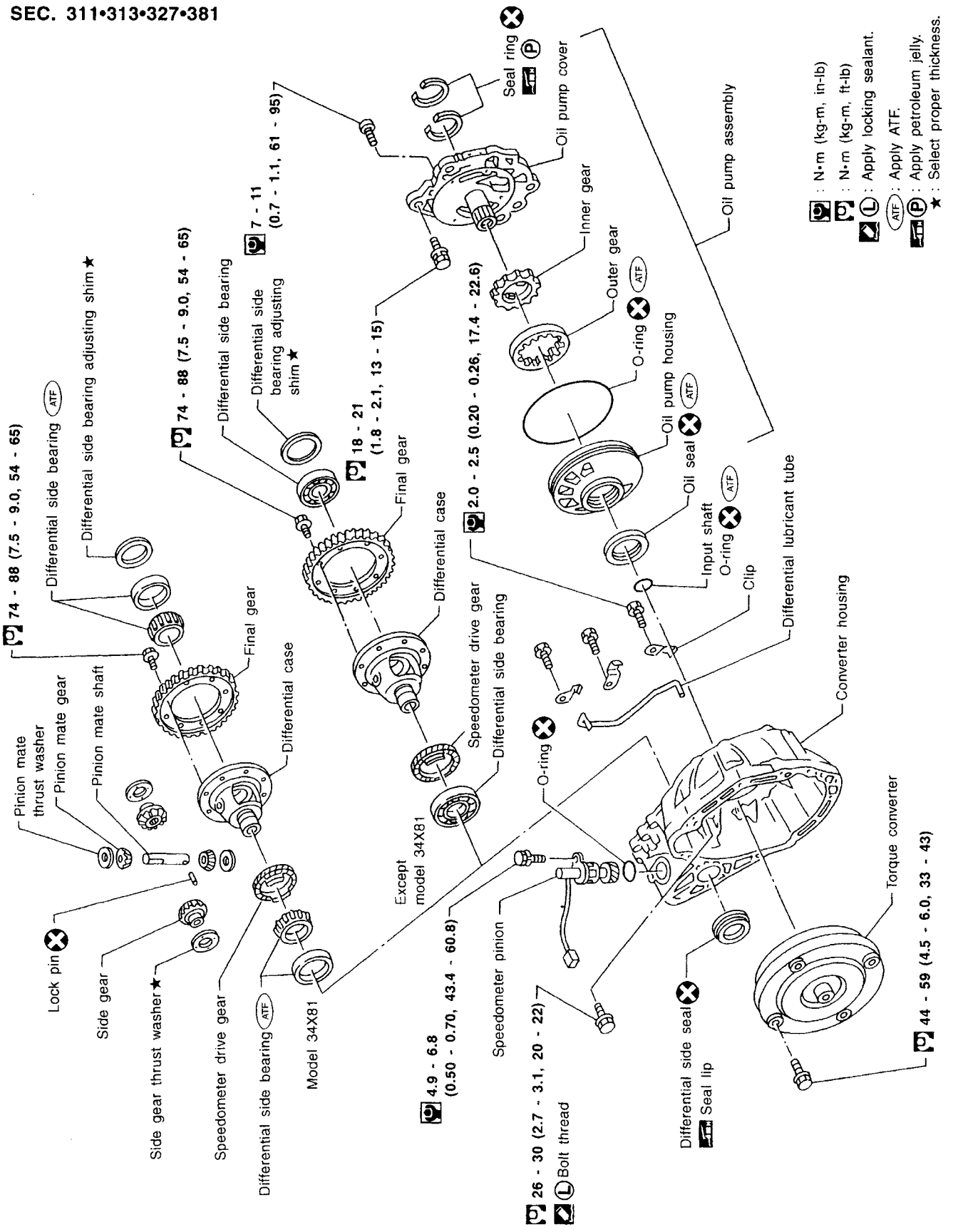

SAT199I

Simpo PDF Merge and Split Unregistered Version - http://www.simpopdf.com

All Models (Cont'd)

SEC. 315

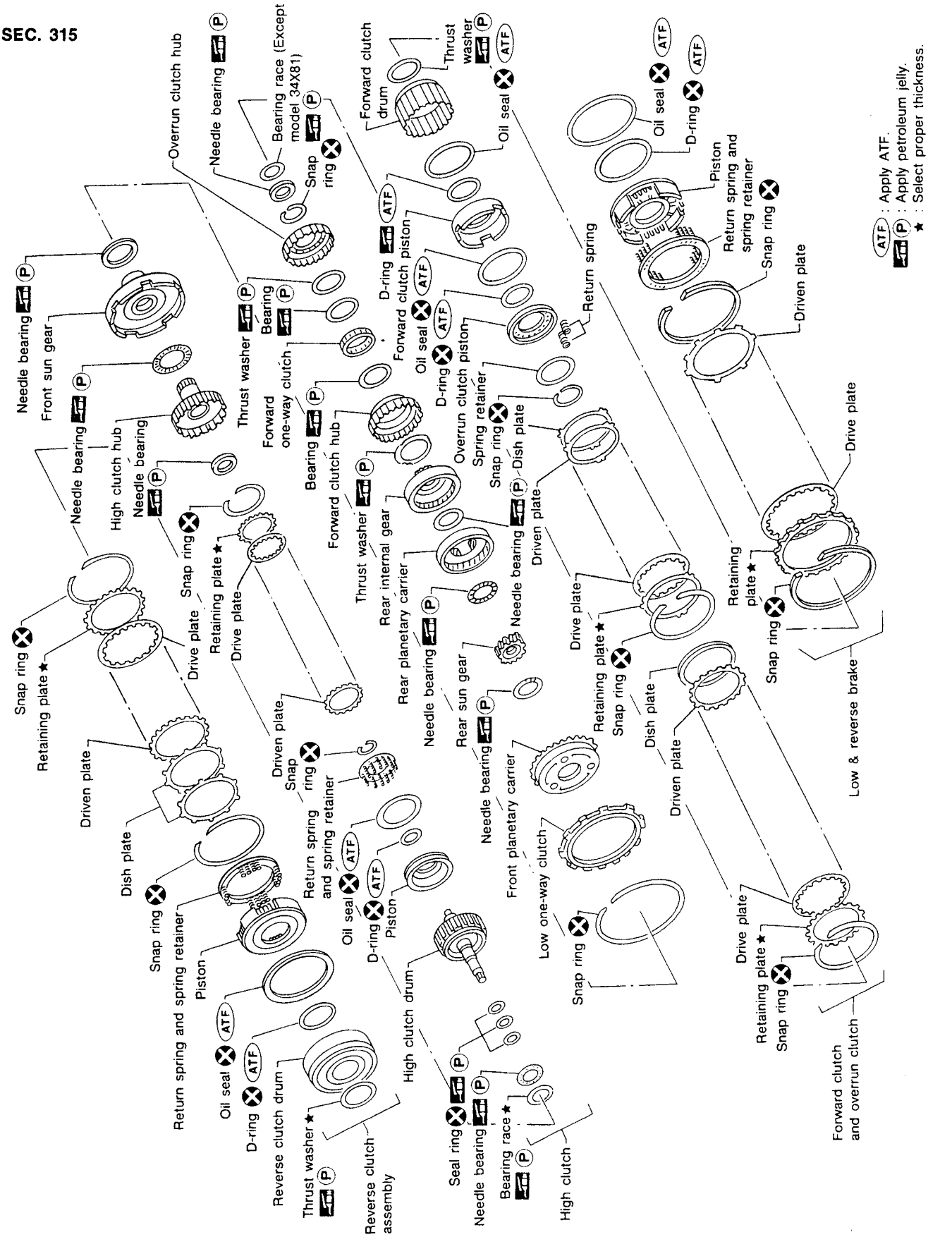

SAT932HA

AT

Simpo PDF Merge and Split Unregistered Version - http://www.simpopdf.com

Except Model 34X81

SEC. 310•311•312•314•315•317•319

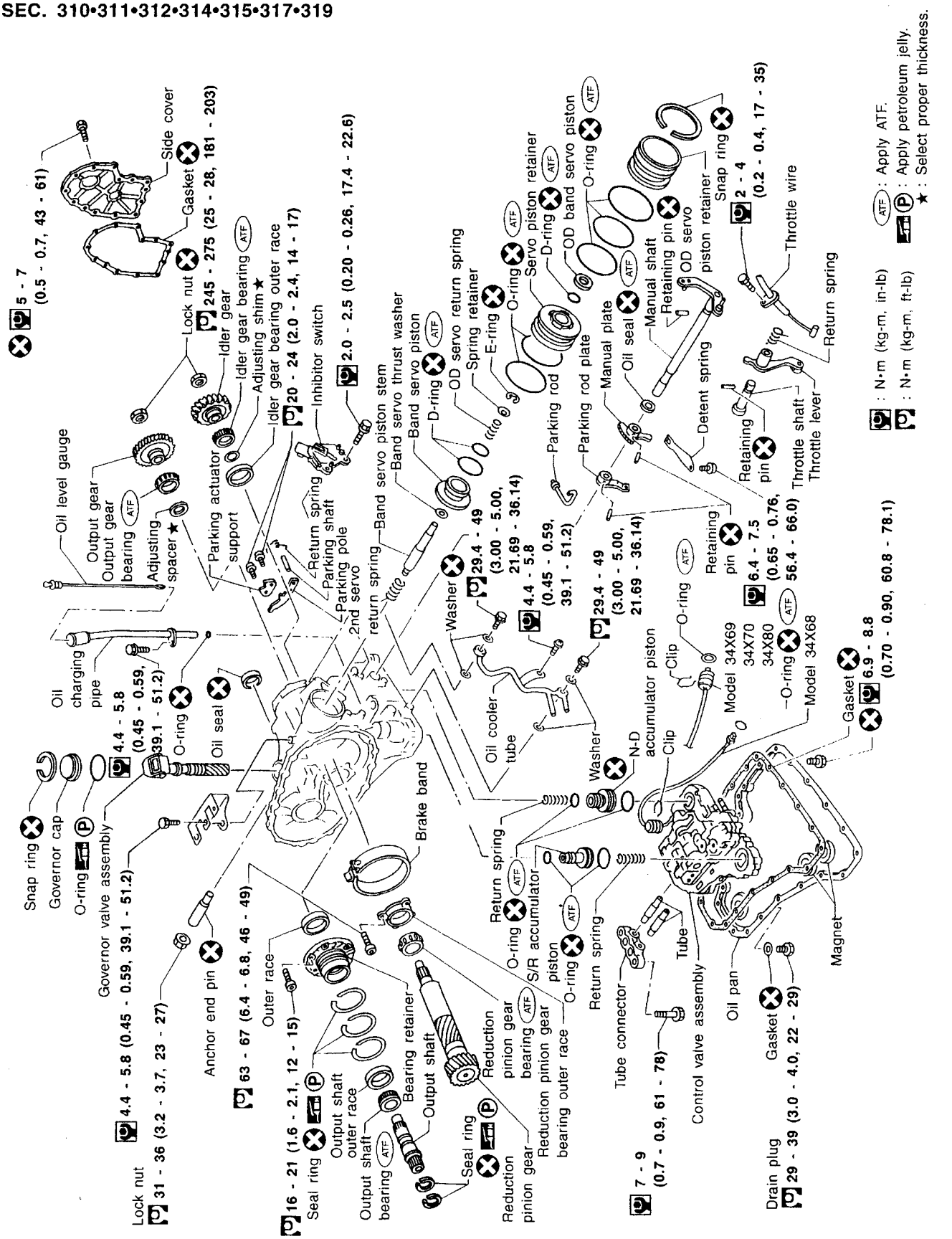

SAT200I

Simpo PDF Merge and Split Unregistered Version - http://www.simpopdf.com

Model 34X81

SEC. 310•311•312•314•315•317•319

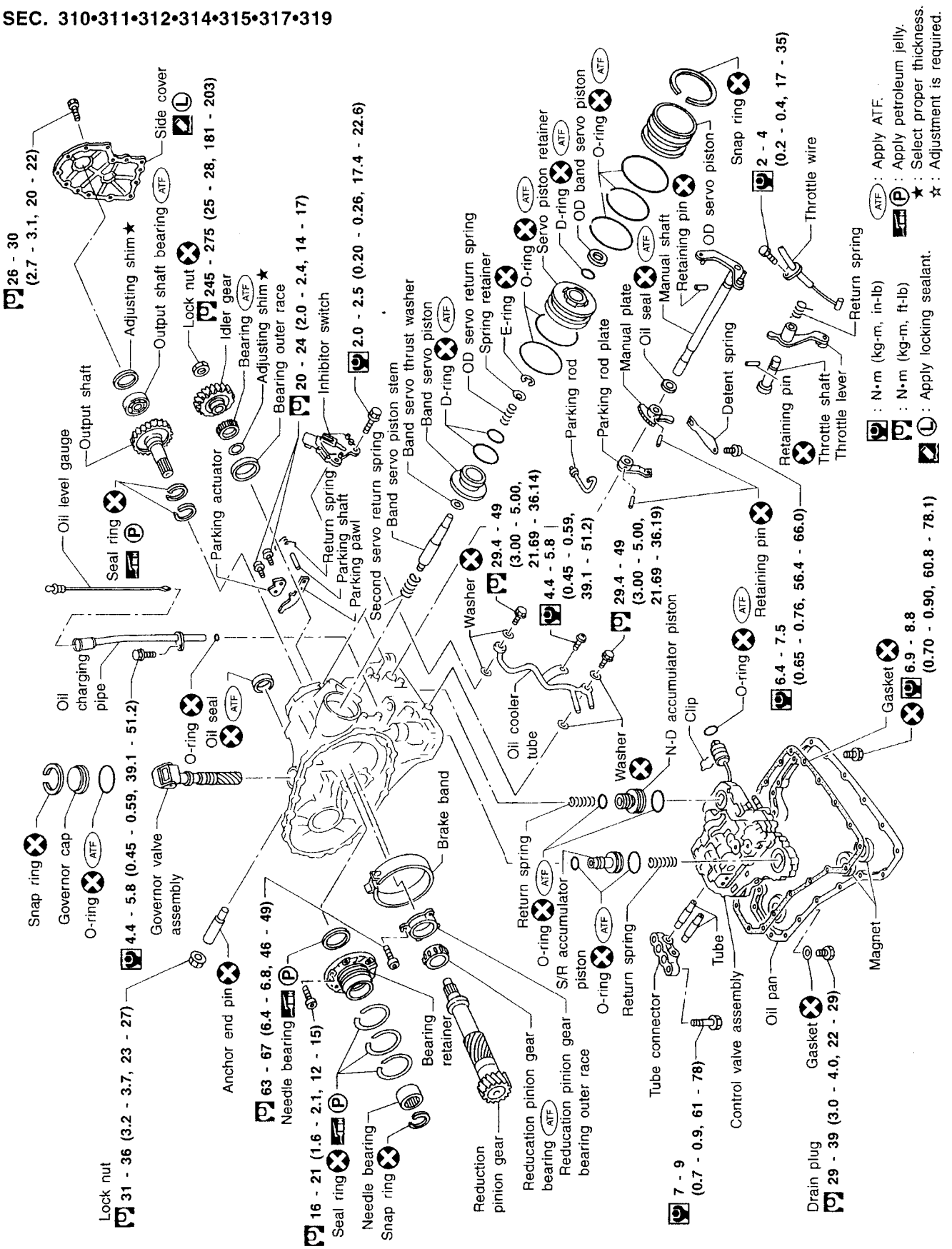

SAT201I

AT

Simpo PDF Merge and Split Unregistered Version - http://www.simpopdf.com

Shift Control Components

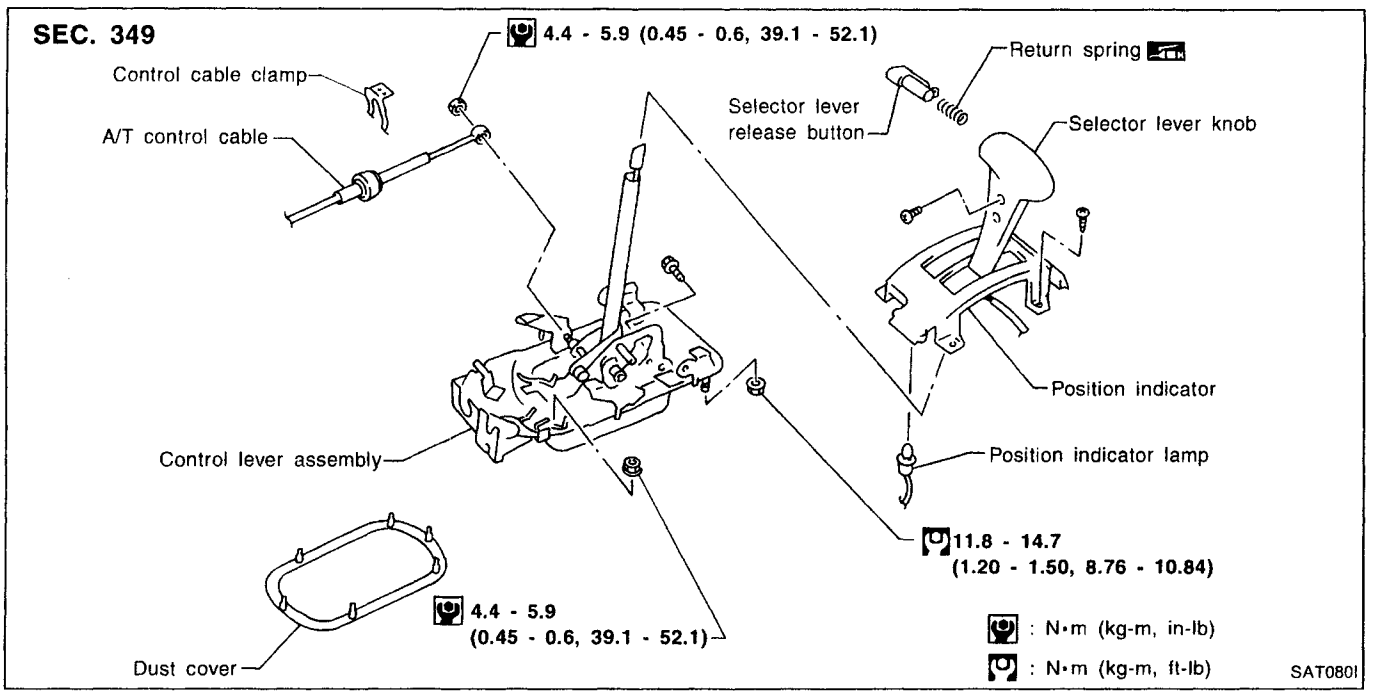

Simpo PDF Merge and Split Unregistered Version - http://www.simpopdf.com

Oil Channel

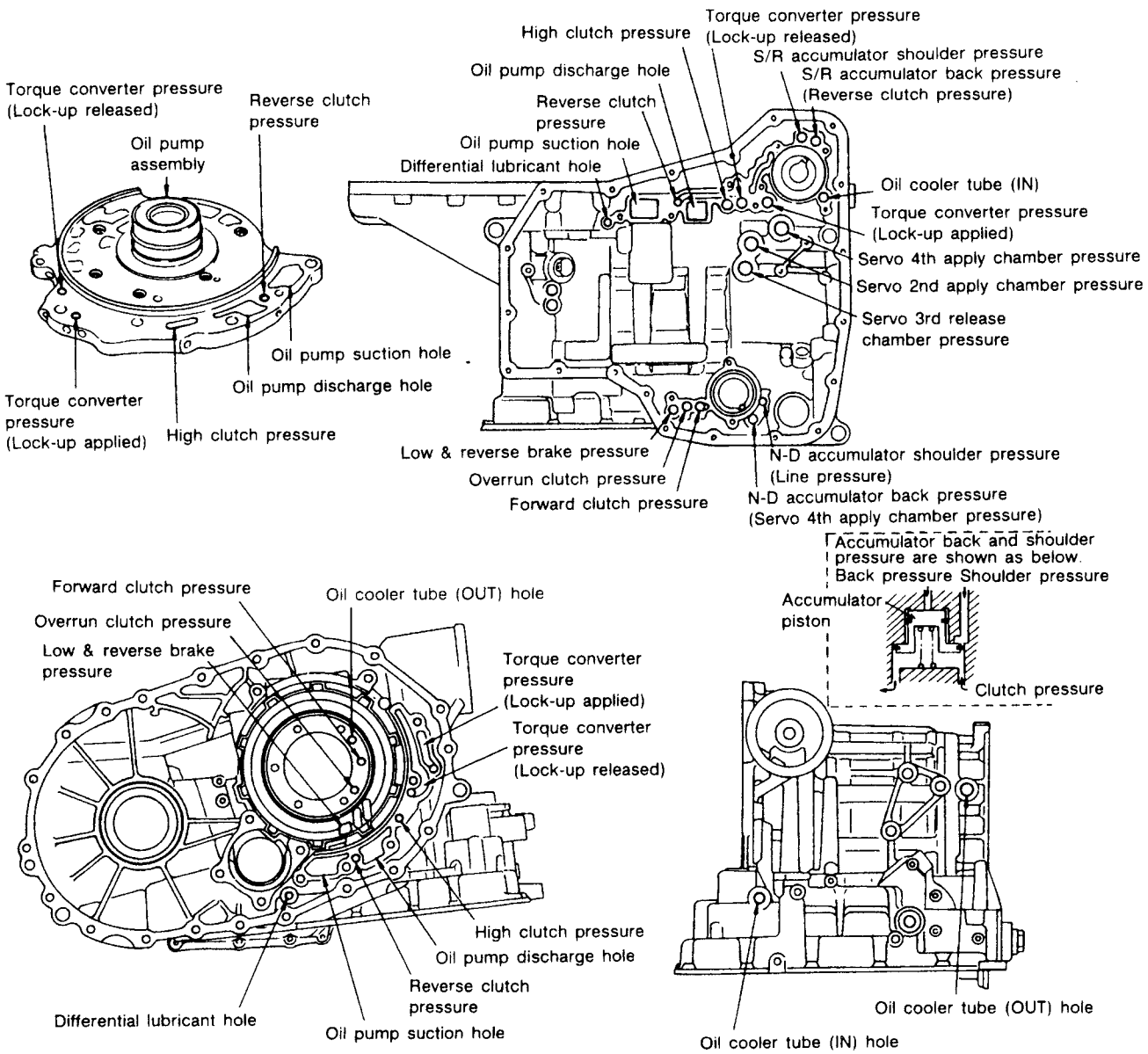

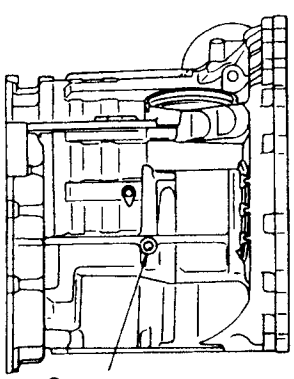

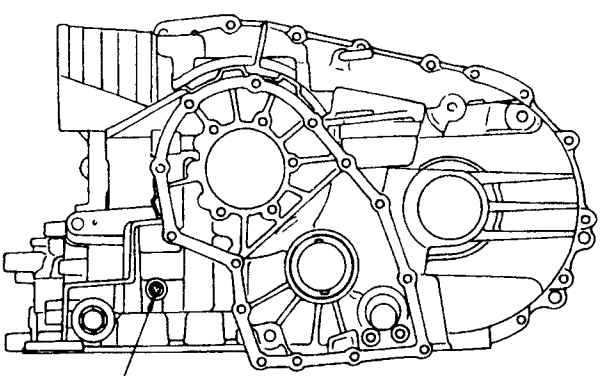

SAT586DC

Simpo PDF Merge and Split Unregistered Version - http://www.simpopdf.com

Locations of Adjusting Shims, Needle Bearings, Thrust Washers and Snap Rings — Except Model 34X81

Outer diameter and color of thrust washers

Item number	Outer diameter mm (in)	Color
⑮	72.0 (2.835)	black
⑯	78.5 (3.091)	

Outer and inner diameter of needle bearings

Item number	Outer diameter mm (in)	Inner diameter mm (in)
⑦	47.0 (1.850)	32.0 (1.260)
⑧	35.0 (1.378)	20.1 (0.791)
⑨	60.0 (2.362)	42.0 (1.654)
⑩	60.0 (2.362)	45.0 (1.772)
⑪	47.0 (1.850)	30.0 (1.181)
⑫	42.6 (1.677)	26.1 (1.028)
⑬	48.0 (1.890)	33.5 (1.319)
⑭	54.0 (2.126)	40.1 (1.579)

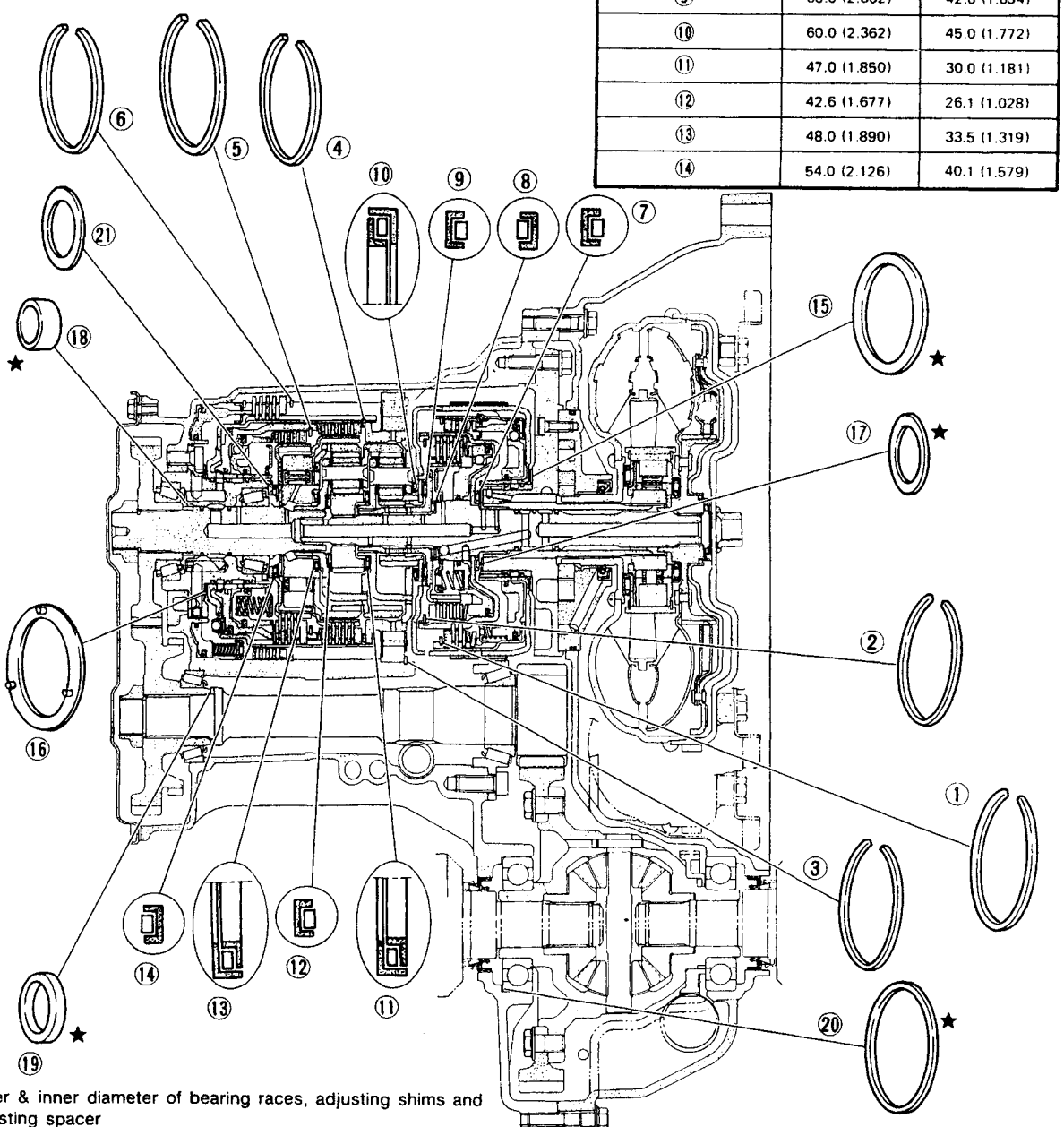

Outer & inner diameter of bearing races, adjusting shims and adjusting spacer

Item number	Outer diameter mm (in)	Inner diameter mm (in)
⑰	48.0 (1.890)	33.0 (1.299)
⑱	29.0 (1.142)	25.0 (0.984)
⑲	34.5 (1.358)	26.1 (1.028)
⑳	79.5 (3.130)	72.0 (2.835)
㉑	55.0 (2.165)	42.0 (1.654)

★: Select proper thickness.

Outer diameter of snap rings

Item number	Outer diameter mm (in)
①	142.0 (5.59)
②	113.0 (4.45)
③	162.4 (6.39)
④	135.4 (5.33)
⑤	126.0 (4.96)
⑥	161.5 (6.36)

SAT510H

Simpo PDF Merge and Split Unregistered Version - http://www.simpopdf.com

Locations of Adjusting Shims, Needle Bearings, Thrust Washers and Snap Rings — Model 34X81

Outer diameter and color of thrust washers

Item number	Outer diameter mm (in)	Color
⑰	72.0 (2.835)	Black
⑱	78.5 (3.091)	

Outer & inner diameter of needle bearings

Item number	Outer diameter mm (in)	Inner diameter mm (in)
⑧	47.0 (1.850)	32.0 (1.260)
⑨	35.0 (1.378)	20.0 (0.787)
⑩	60.0 (2.362)	42.0 (1.654)
⑪	60.0 (2.362)	45.0 (1.772)
⑫	47.0 (1.850)	30.0 (1.181)
⑬	42.6 (1.677)	26.1 (1.028)
⑭	48.0 (1.890)	33.5 (1.319)
⑮	55.0 (2.165)	40.5 (1.594)
⑯	60.0 (2.362)	40.1 (1.579)

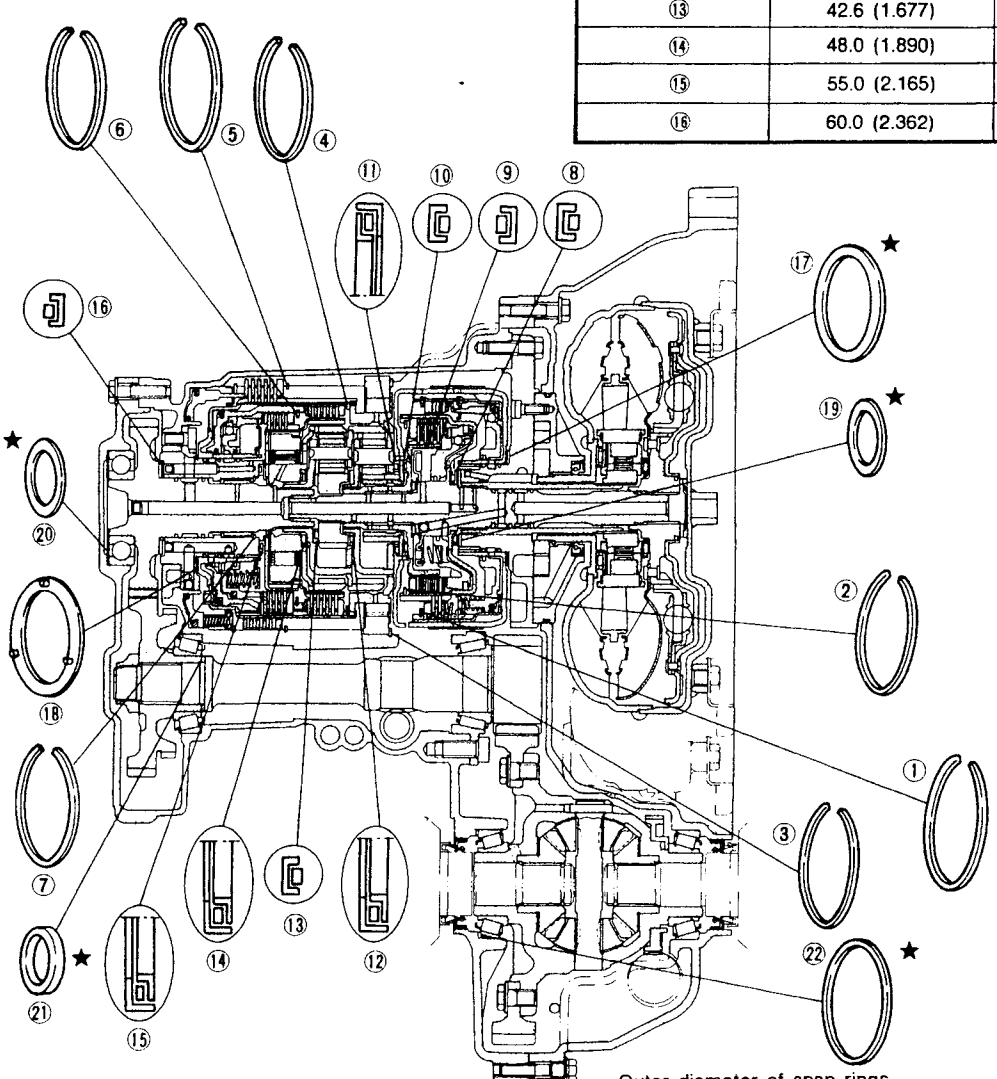

★ : Select proper thickness.

Outer & inner diameter of bearing race and adjusting shims

Item number	Outer diameter mm (in)	Inner diameter mm (in)
⑲	48.0 (1.890)	33.0 (1.299)
⑳	72.0 (2.835)	61.0 (2.402)
㉑	34.5 (1.358)	26.1 (1.028)
㉒	68.0 (2.677)	60.0 (2.362)

Outer diameter of snap rings

Item number	Outer diameter mm (in)
①	142.0 (5.59)
②	113.0 (4.45)
③	162.4 (6.39)
④	135.4 (5.33)
⑤	161.5 (6.36)
⑥	126.0 (4.96)
⑦	40.5 (1.594)

SAT106EC

Simpo PDF Merge and Split Unregistered Version - http://www.simpopdf.com

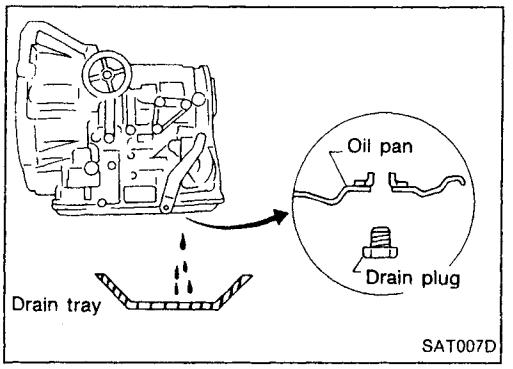

1. Drain ATF through drain plug.

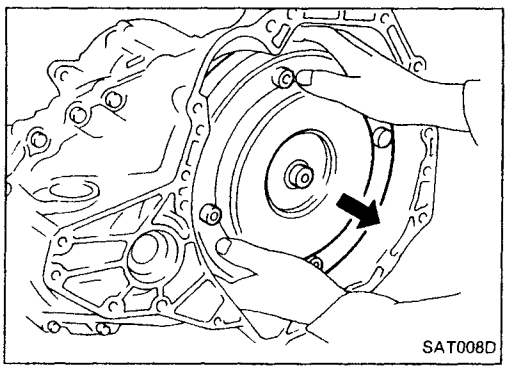

2. Remove torque converter.

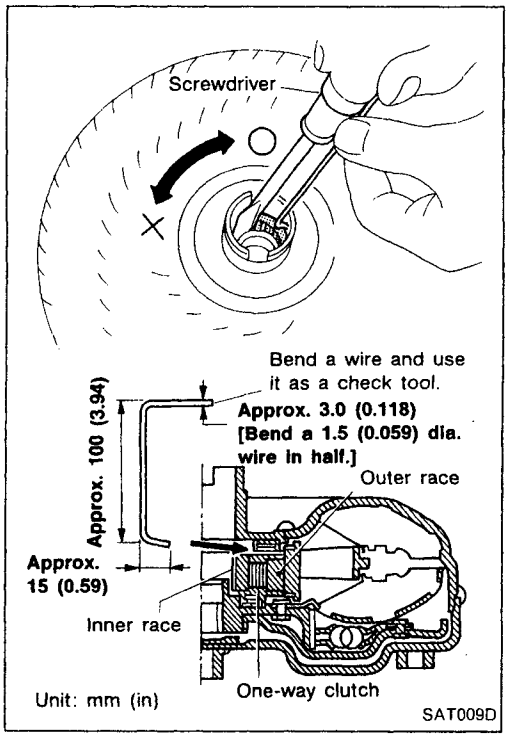

3. Check torque converter one-way clutch using check tool as shown at left.
   a. Insert check tool into the groove of bearing support built into one-way clutch outer race.
   b. While fixing bearing support with check tool, rotate one-way clutch spline using flat-bladed screwdriver.
   c. Check inner race rotates clockwise only. If not, replace torque converter assembly.

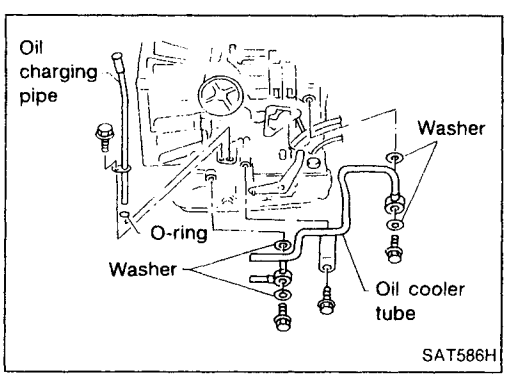

4. Remove oil charging pipe and oil cooler tube.

Simpo PDF Merge and Split Unregistered Version - http://www.simpopdf.com

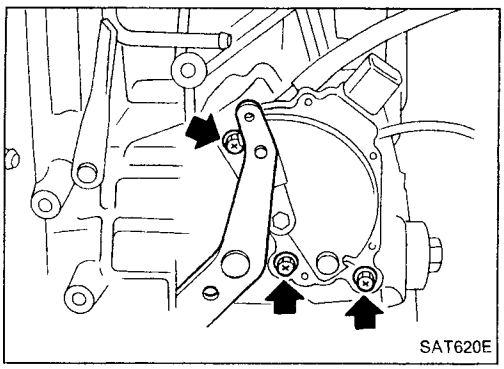
SAT620E

5. Set manual shaft to "P" position.
6. Remove inhibitor switch.

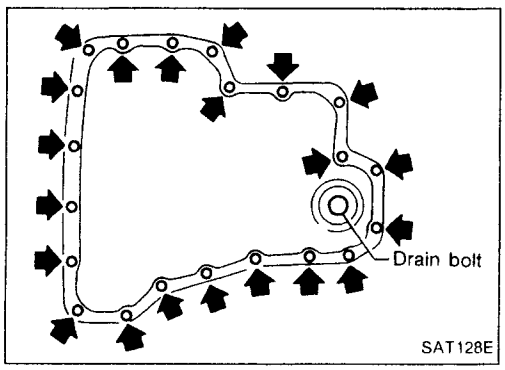

SAT128E

7. Remove oil pan and oil pan gasket.
- **Do not reuse oil pan bolts.**

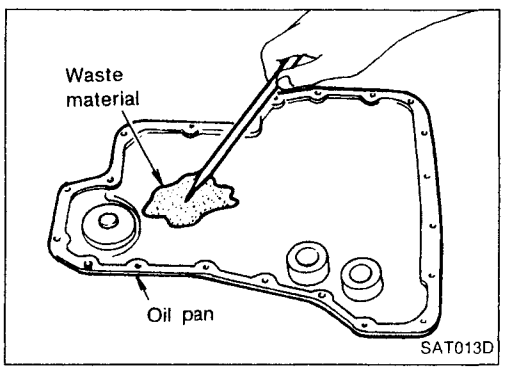

SAT013D

8. Check foreign materials in oil pan to help determine cause of malfunction. If the fluid is very dark, smells burned, or contains foreign particles, the frictional material (clutches, band) may need replacement. A tacky film that will not wipe clean indicates varnish build up. Varnish can cause valves, servo and clutches to stick and can inhibit pump pressure.
- **If frictional material is detected, replace radiator after repair of A/T. Refer to LC section ("Radiator", "ENGINE COOLING SYSTEM").**

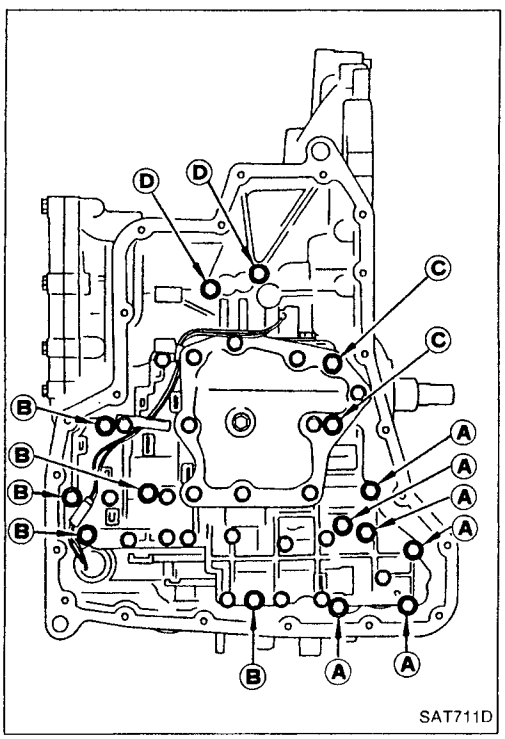

SAT711D

9. Remove control valve assembly according to the following procedures.

a. Remove control valve assembly mounting bolts Ⓐ, Ⓑ, Ⓒ and Ⓓ.

AT

Simpo PDF Merge and Split Unregistered Version - http://www.simpopdf.com

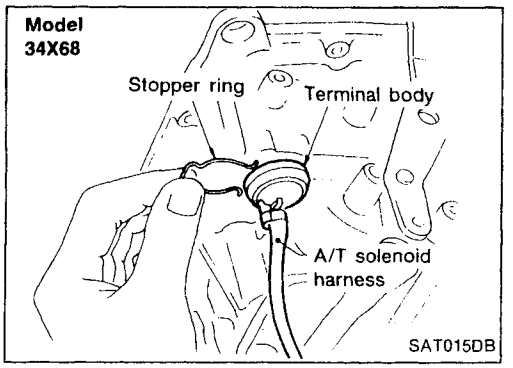

b. Remove stopper ring from terminal body.

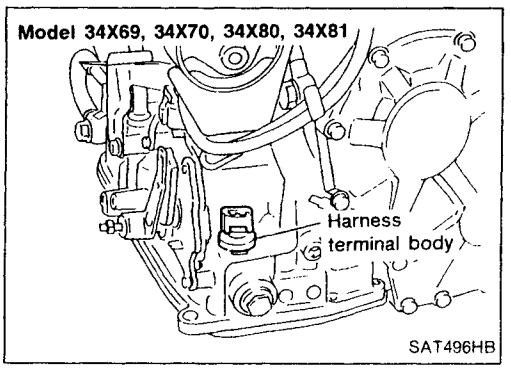

c. Push terminal body into transmission case and draw out solenoid harness.

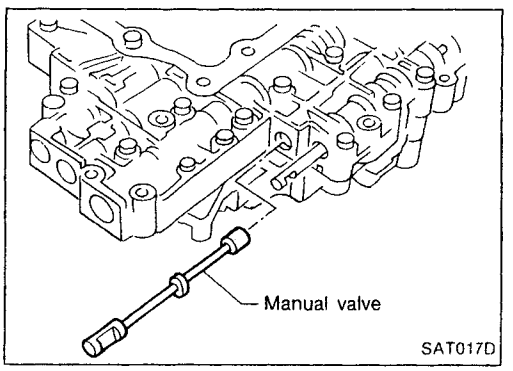

10. Remove manual valve from control valve assembly.

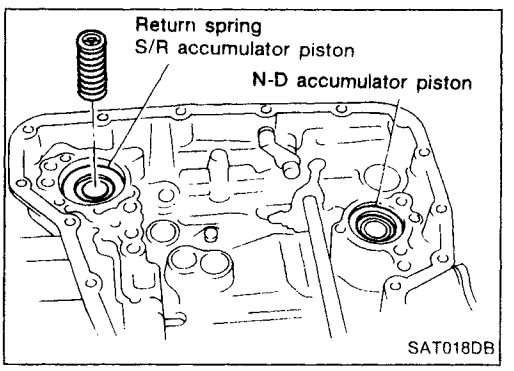

11. Remove return spring from S/R accumulator piston.

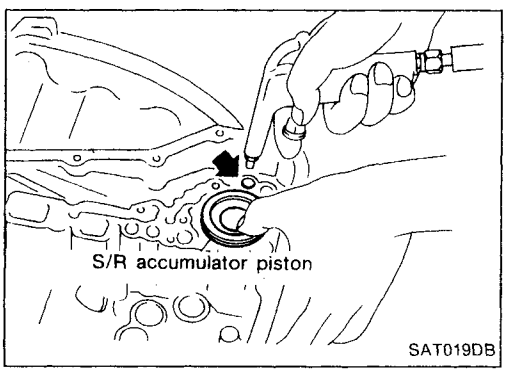

12. Remove S/R accumulator piston with compressed air.
13. Remove O-rings from S/R accumulator piston.

Simpo PDF Merge and Split Unregistered Version - http://www.simpopdf.com

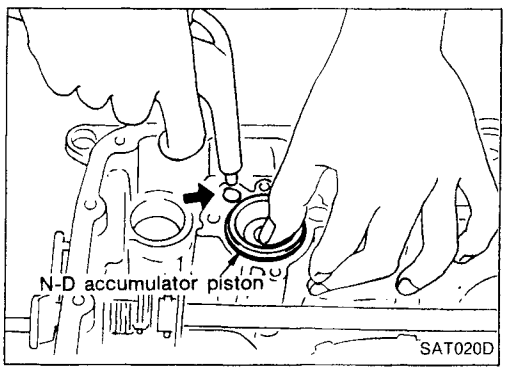

14. Remove N-D accumulator piston and return spring with compressed air.
15. Remove O-rings from N-D accumulator piston.

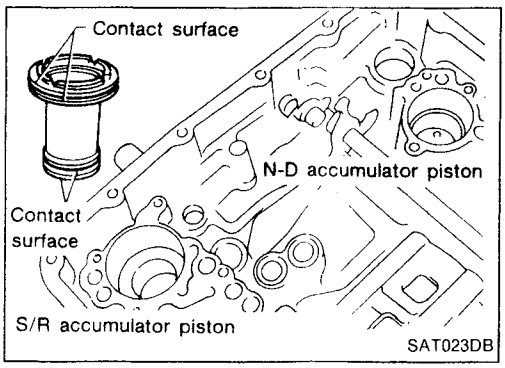

16. Check accumulator pistons and contact surface of transmission case for damage.
17. Check accumulator return springs for damage and free length.

Unit: mm (in)

Spring	Free length	Outer diameter
S/R accumulator spring	56.4 (2.220)	21.0 (0.827)
N-D accumulator spring	43.5 (1.713)	28.0 (1.102)

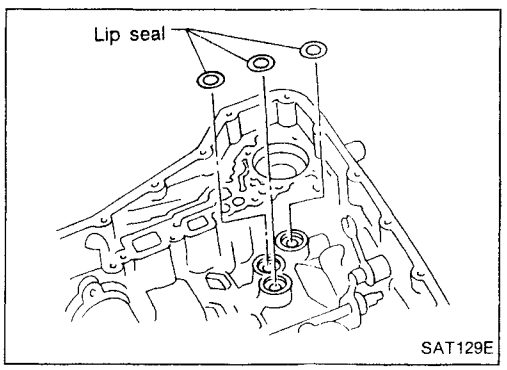

18. Remove lip seals from band servo oil port.

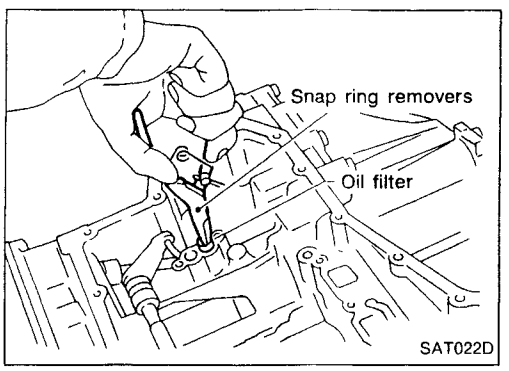

19. Remove oil filter for governor.

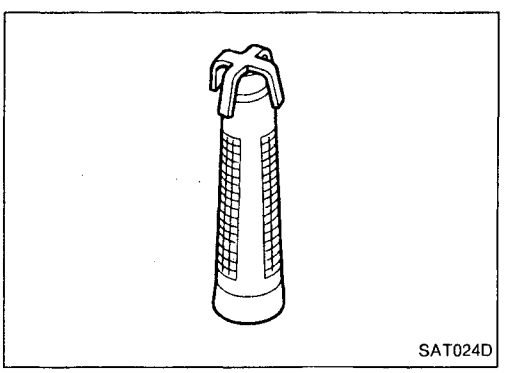

20. Check oil filter for governor for damage or clogging.

Simpo PDF Merge and Split Unregistered Version - http://www.simpopdf.com

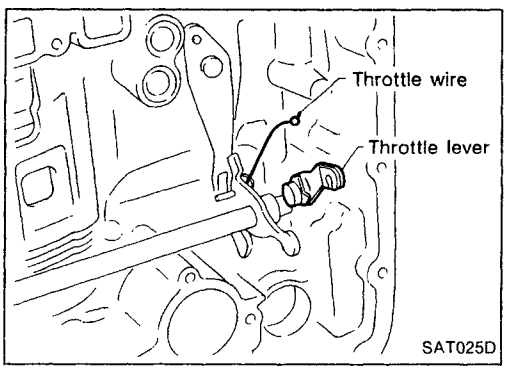

21. Remove throttle wire from throttle lever.

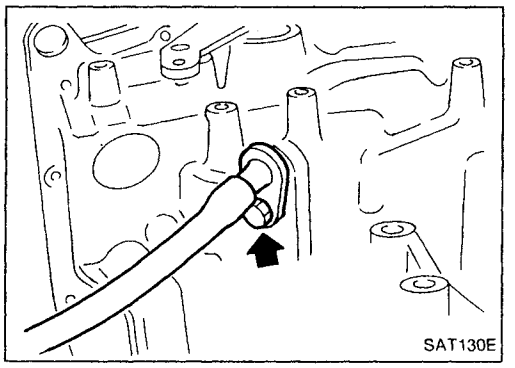

22. Remove throttle wire mounting bolt.
23. Draw out throttle wire from transmission case.

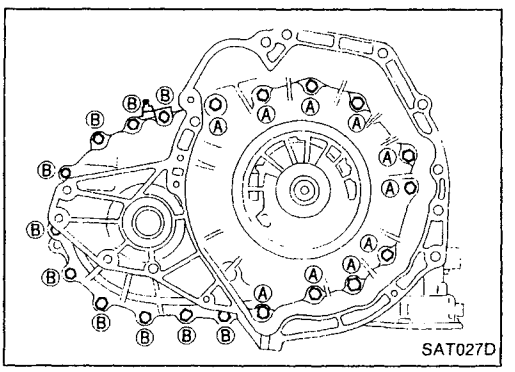

— All models —

24. Remove converter housing according to the following procedures.

a. Remove converter housing mounting bolts Ⓐ and Ⓑ.

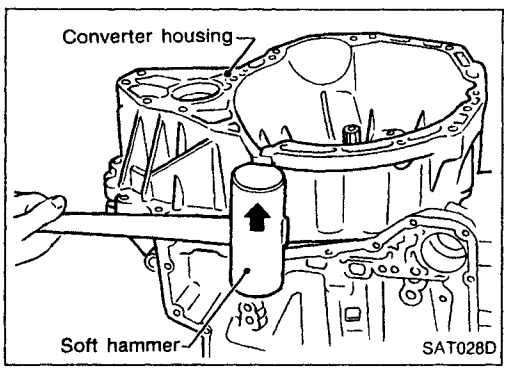

b. Remove converter housing.

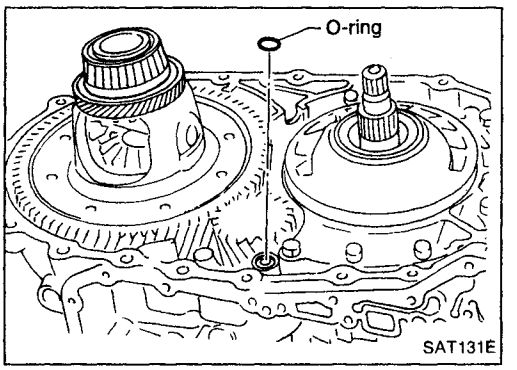

c. Remove O-ring from differential oil port.

Simpo PDF Merge and Split Unregistered Version - http://www.simpopdf.com

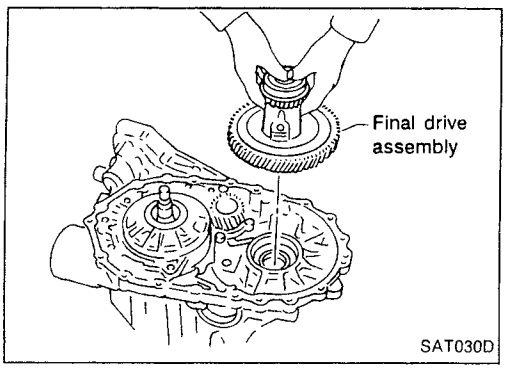

25. Remove final drive assembly from transmission case.
- **If it is difficult to lift up by hand, tap final drive slightly with a soft hammer (Except model 34X81).**

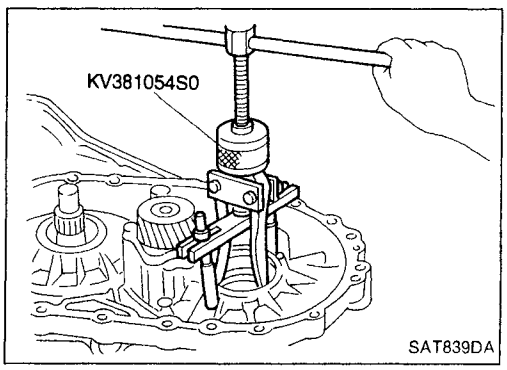

26. Remove differential side bearing outer race from transmission case (Model 34X81).

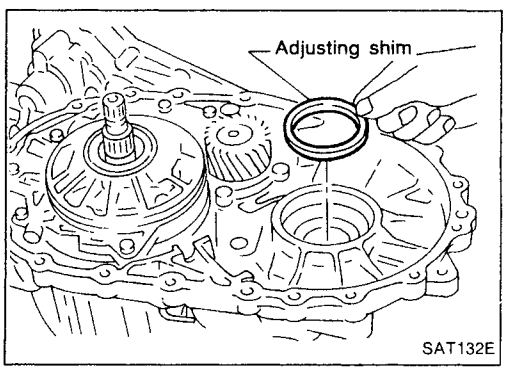

27. Remove differential side bearing adjusting shim from transmission case.

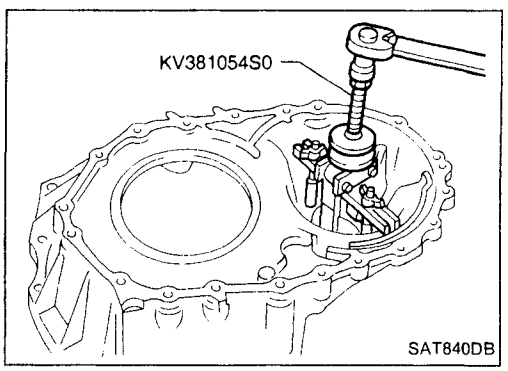

28. Remove differential side bearing outer race from converter housing (Model 34X81).

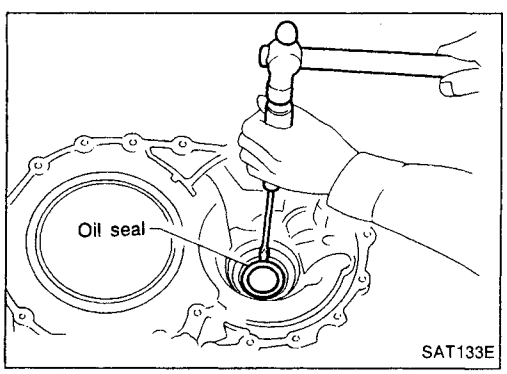

29. Remove oil seal from converter housing using a screwdriver.
- **Be careful not to damage case.**

AT

Simpo PDF Merge and Split Unregistered Version - http://www.simpopdf.com

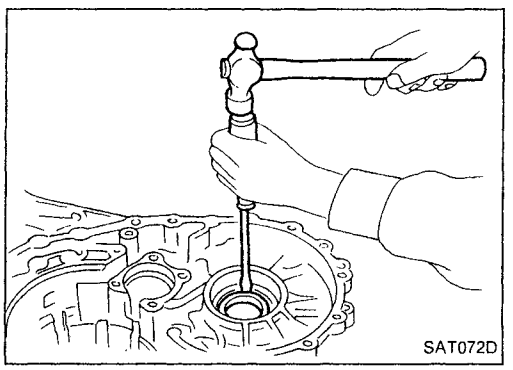
SAT072D

30. Remove side oil seal from transmission case using a screwdriver.

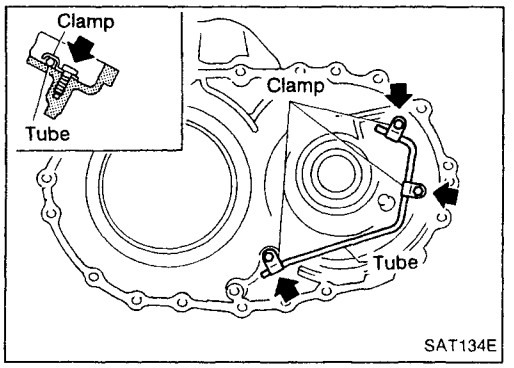

SAT134E

31. Remove oil tube from converter housing.

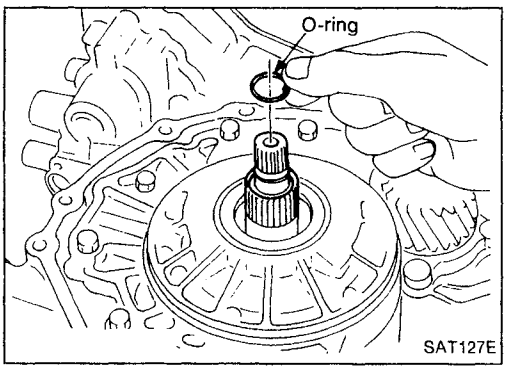

SAT127E

32. Remove oil pump according to the following procedures.
a. Remove O-ring from input shaft.

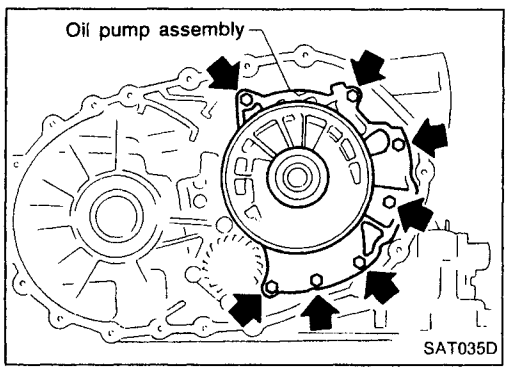

SAT035D

b. Remove oil pump assembly from transmission case.

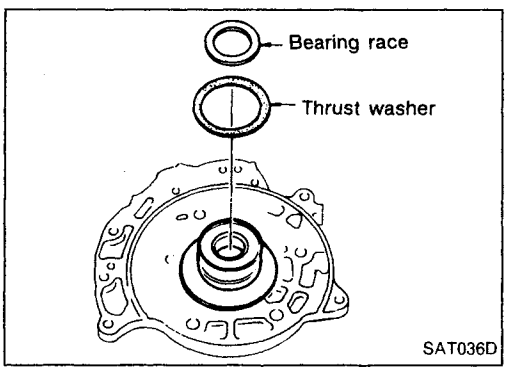

SAT036D

c. Remove thrust washer and bearing race from oil pump assembly.

Simpo PDF Merge and Split Unregistered Version - http://www.simpopdf.com

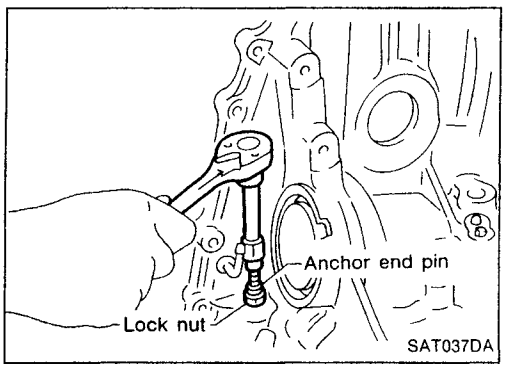

33. Remove brake band according to the following procedures.
a. Loosen lock nut, then back off anchor end pin.
- **Do not reuse anchor end pin.**

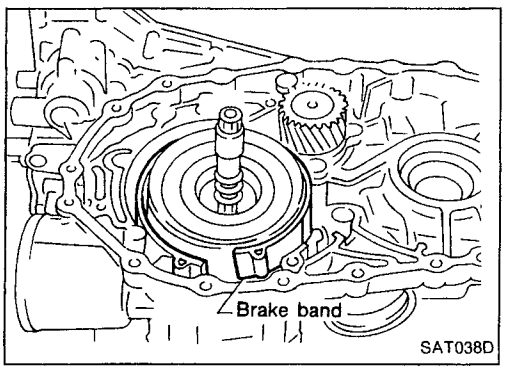

b. Remove brake band from transmission case.

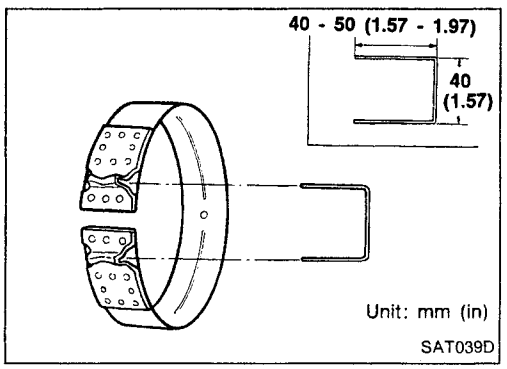

- **To prevent brake linings from cracking or peeling, do not stretch the flexible band unnecessarily. When removing the brake band, always secure it with a clip as shown in the figure at left.**
  Leave the clip in position after removing the brake band.

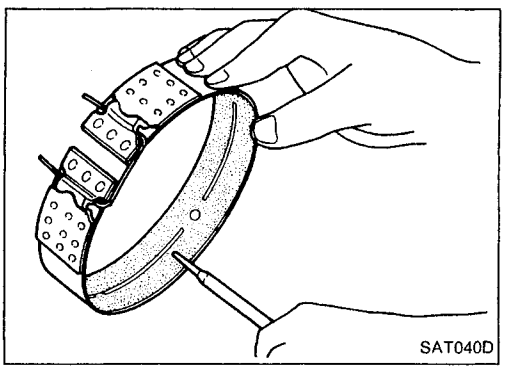

c. Check brake band facing for damage, cracks, wear or burns.

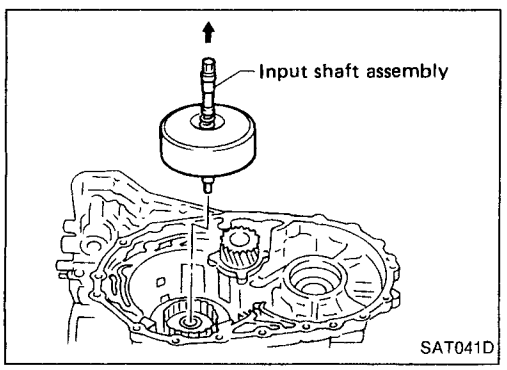

34. Remove input shaft assembly (high clutch) and reverse clutch according to the following procedures.
a. Remove input shaft assembly (high clutch) with reverse clutch.

AT

Simpo PDF Merge and Split Unregistered Version - http://www.simpopdf.com

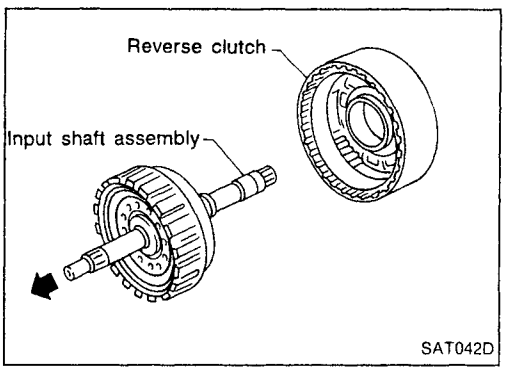

b. Remove input shaft assembly (high clutch) from reverse clutch.

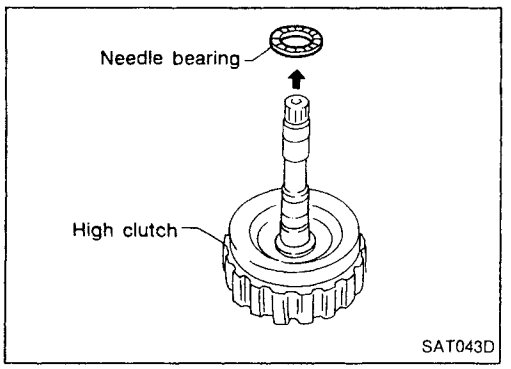

c. Remove needle bearing from high clutch drum.
d. Check input shaft assembly and needle bearing for damage or wear.

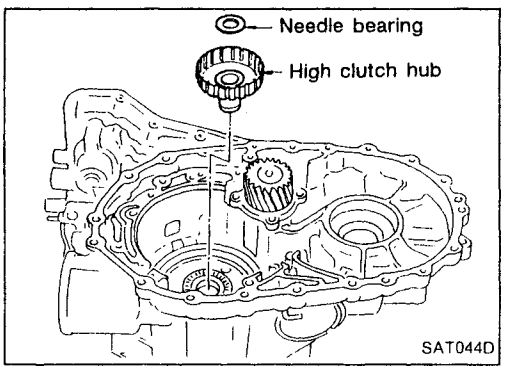

35. Remove high clutch hub and needle bearing from transmission case.
36. Check high clutch hub and needle bearing for damage or wear.

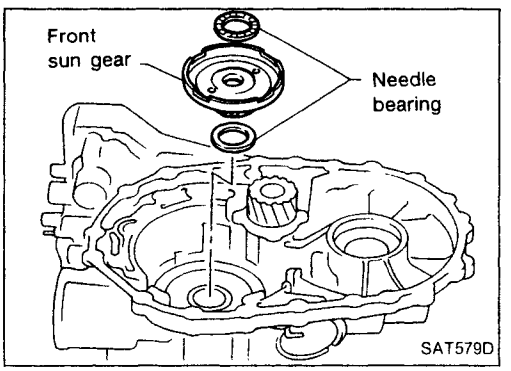

37. Remove front sun gear and needle bearings from transmission case.
38. Check front sun gear and needle bearings for damage or wear.

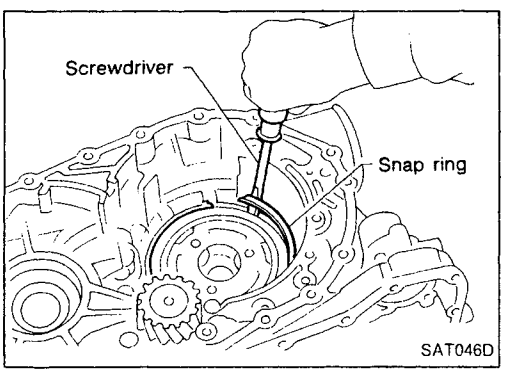

39. Remove front planetary carrier assembly and low one-way clutch according to the following procedures.
a. Remove snap ring using a screwdriver.

Simpo PDF Merge and Split Unregistered Version - http://www.simpopdf.com

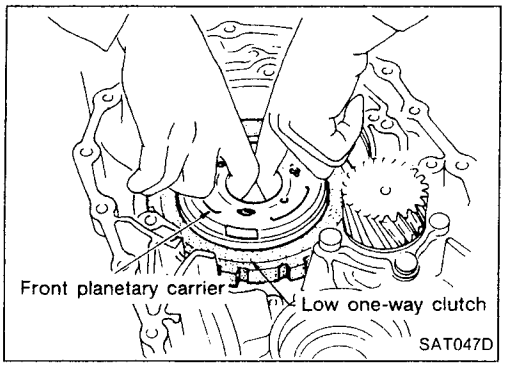

b. Remove front planetary carrier with low one-way clutch.

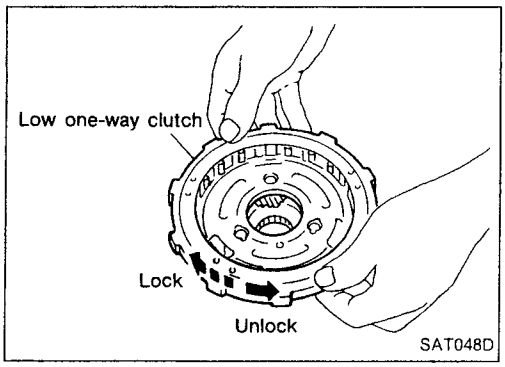

c. Check that low one-way clutch rotates in the direction of the arrow and locks in the opposite direction.
d. Remove low one-way clutch from front planetary carrier by rotating it in the direction of unlock.

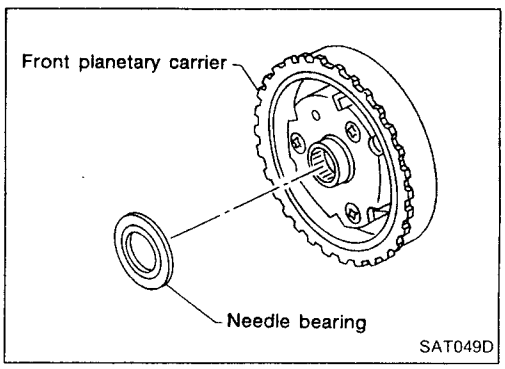

e. Remove needle bearing from front planetary carrier.

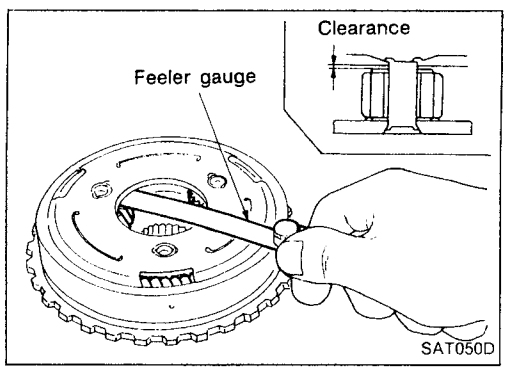

f. Check front planetary carrier, low one-way clutch and needle bearing for damage or wear.
g. Check clearance between pinion washer and planetary carrier using feeler gauge.

Standard clearance:

0.15 - 0.70 mm (0.0059 - 0.0276 in)

Replace if the clearance exceeds 0.80 mm (0.0315 in).

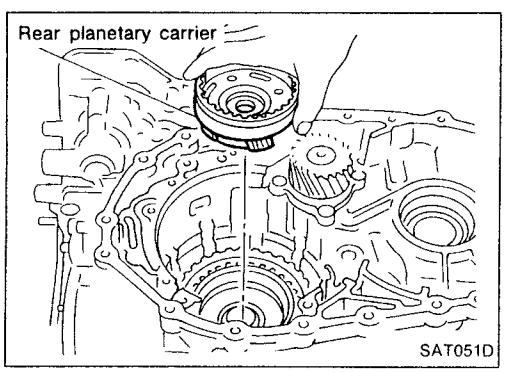

40. Remove rear planetary carrier assembly and rear sun gear according to the following procedures.
a. Remove rear planetary carrier assembly from transmission case.

AT

Simpo PDF Merge and Split Unregistered Version - http://www.simpopdf.com

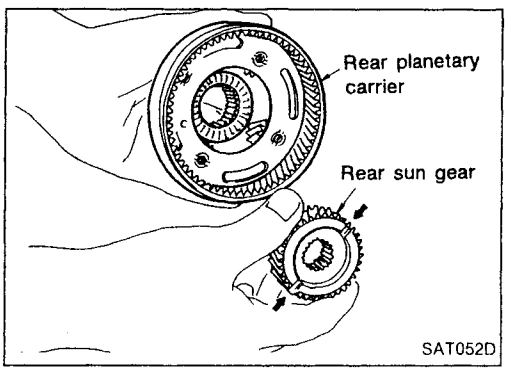

b. Remove rear sun gear from rear planetary carrier.

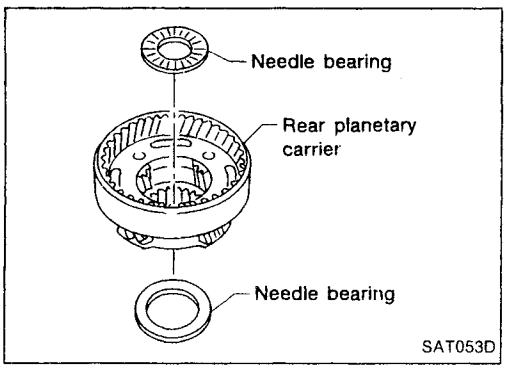

c. Remove needle bearings from rear planetary carrier assembly.

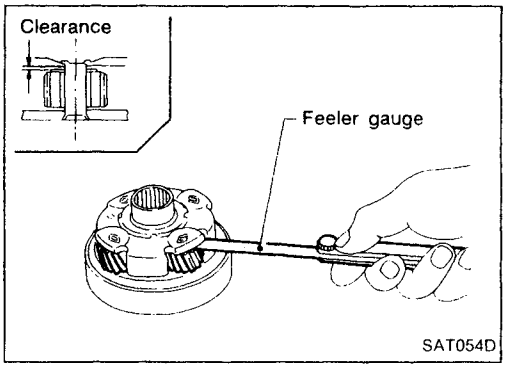

d. Check rear planetary carrier, rear sun gear and needle bearings for damage or wear.
e. Check clearance between pinion washer and rear planetary carrier using feeler gauge.

Standard clearance:

0.15 - 0.70 mm (0.0059 - 0.0276 in)

Replace if the clearance exceeds 0.80 mm (0.0315 in).

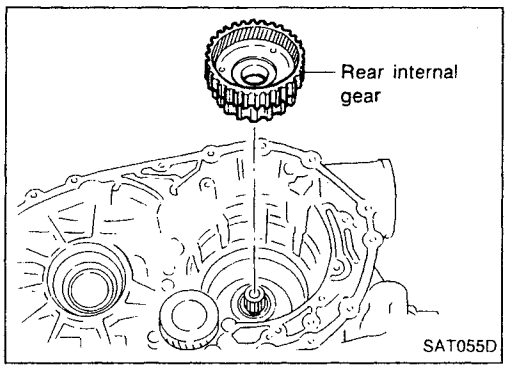

41. Remove rear internal gear from transmission case.

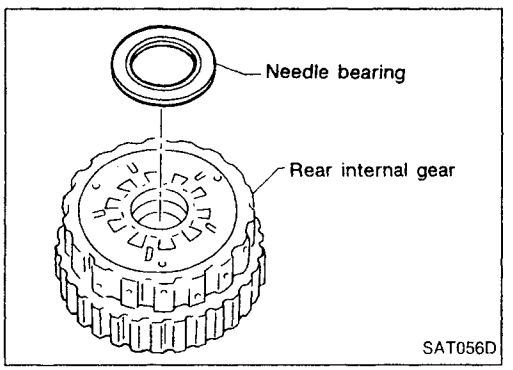

42. Remove needle bearing from rear internal gear.
43. Check needle bearing for damage or wear.

Simpo PDF Merge and Split Unregistered Version - http://www.simpopdf.com

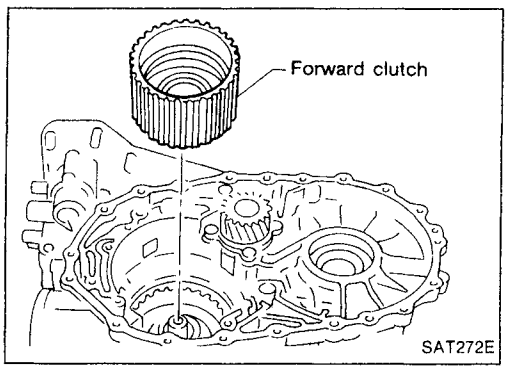

44. Remove forward clutch assembly from transmission case.

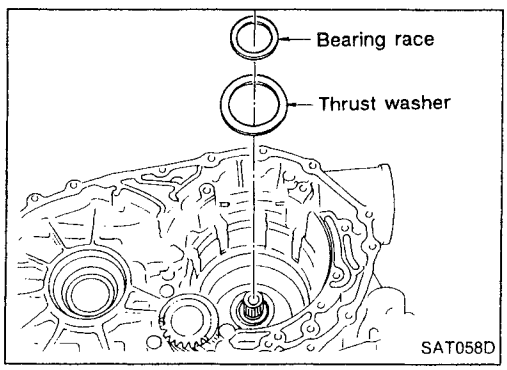

45. Remove thrust washer and bearing race from transmission case.

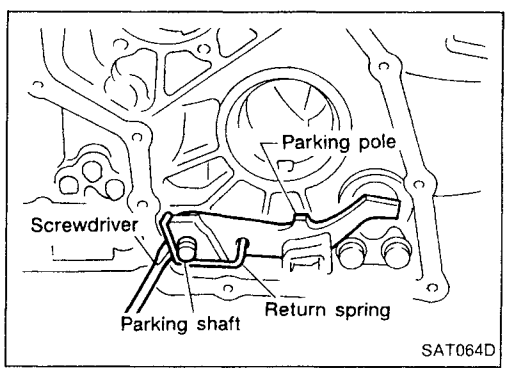

— All models —

46. Remove return spring from parking shaft using a screwdriver.

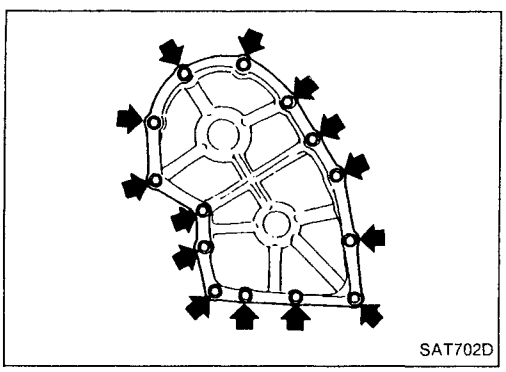

— Except model 34X81 —

47. Remove output shaft, output gear and reduction pinion gear according to the following procedures.

a. Remove side cover.

- **Do not reuse side cover bolts.**

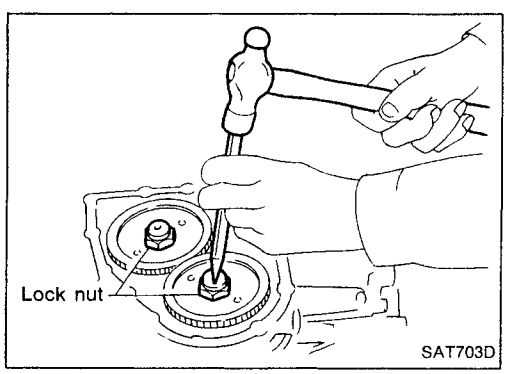

b. Set manual lever to "P" position to fix idler gear and output gear.

c. Unlock both idler gear and output gear lock nuts using a pin punch.

Simpo PDF Merge and Split Unregistered Version - http://www.simpopdf.com

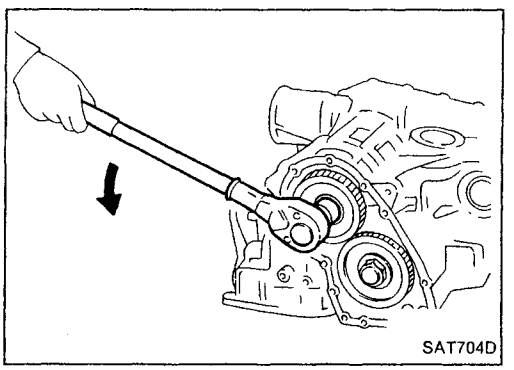
SAT704D

d. Remove idler gear and output gear lock nuts.
- **Do not reuse idler gear and output gear lock nuts.**

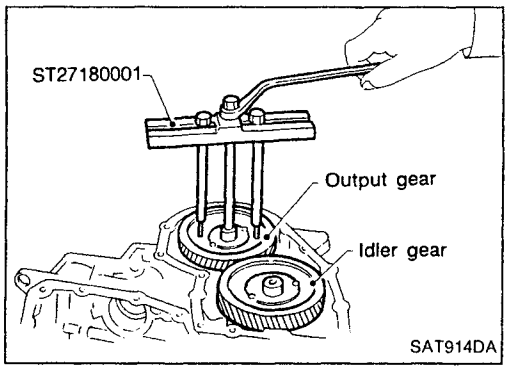

SAT914DA

e. Remove idler gear and output gear using a puller.

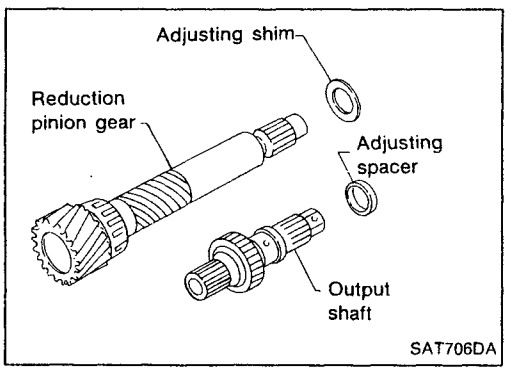

SAT706DA

f. Remove reduction pinion gear and output shaft.
g. Remove adjusting shim from reduction pinion gear.
h. Remove adjusting spacer from output shaft.

— Model 34X81 —

47. Remove output shaft assembly according to the following procedures.

a. Remove side cover bolts.

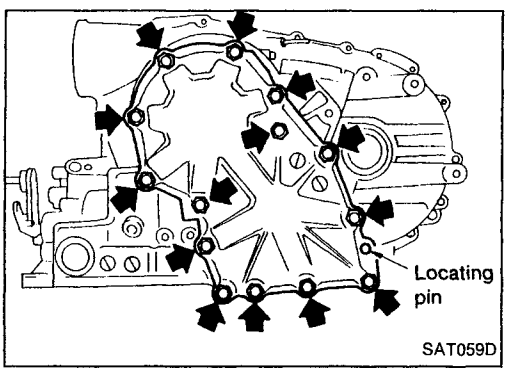

SAT059D

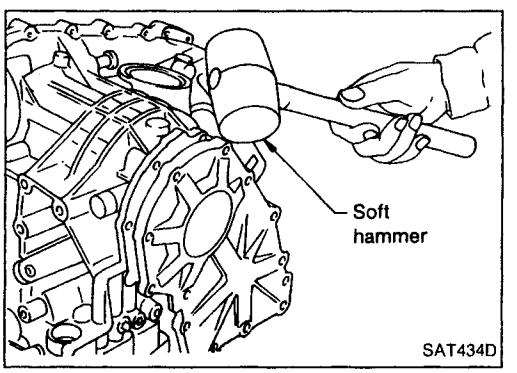

SAT434D

b. Remove side cover by lightly tapping it with a soft hammer.
- **Be careful output shaft assembly does not drop out when removing cover.**

Simpo PDF Merge and Split Unregistered Version - http://www.simpopdf.com

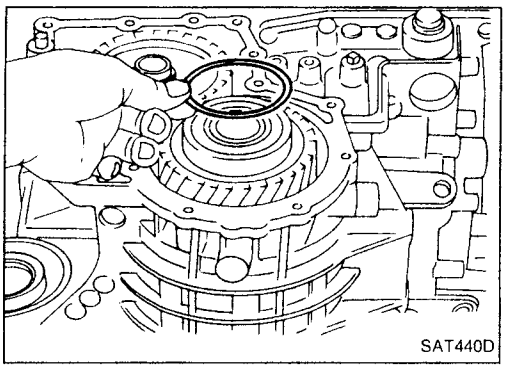
SAT440D

c. Remove adjusting shim.

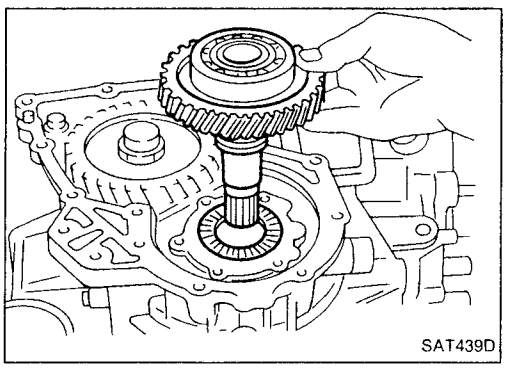
SAT439D

d. Remove output shaft assembly.

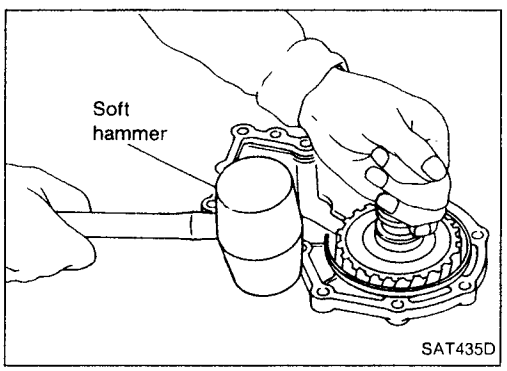

SAT435D

- If output shaft assembly is still attached to side cover, separate the two by tapping cover with a soft hammer.

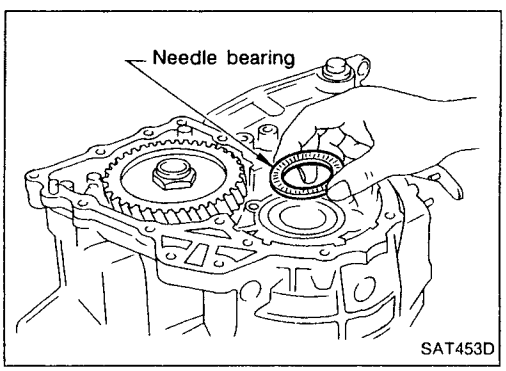

SAT453D

e. Remove needle bearing.

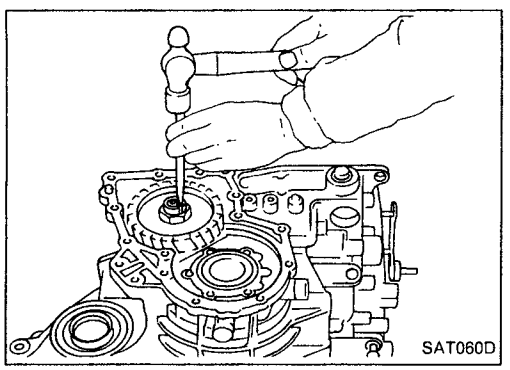
SAT060D

48. Disassemble reduction pinion gear according to the following procedures.
a. Set manual shaft to position "P" to fix idler gear.
b. Unlock idler gear lock nut using a pin punch.

Simpo PDF Merge and Split Unregistered Version - http://www.simpopdf.com

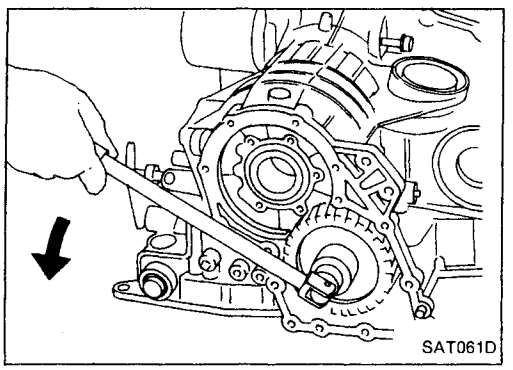

c. Remove idler gear lock nut.
- **Do not reuse idler gear lock nut.**

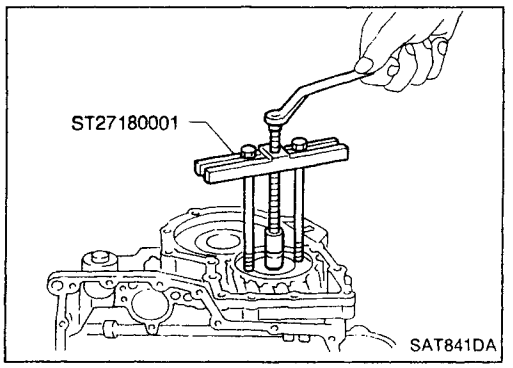

d. Remove idler gear with puller.

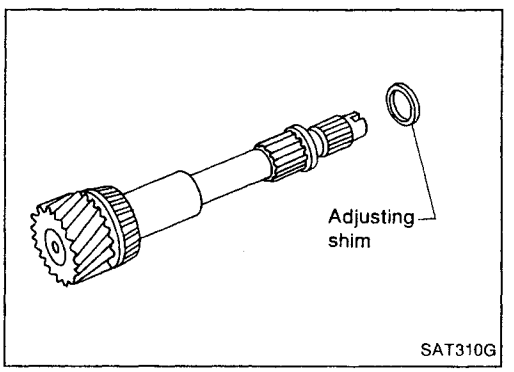

e. Remove reduction pinion gear.
f. Remove adjusting shim from reduction pinion gear.

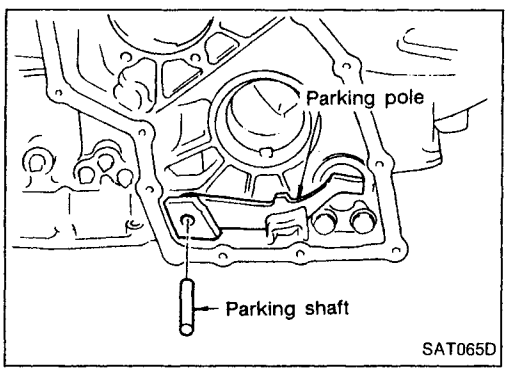

— All models —

49. Draw out parking shaft and remove parking pole from transmission case.
50. Check parking pole and shaft for damage or wear.

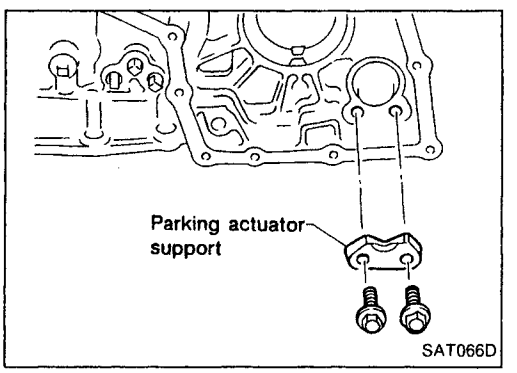

51. Remove parking actuator support from transmission case.
52. Check parking actuator support for damage or wear.

Simpo PDF Merge and Split Unregistered Version - http://www.simpopdf.com

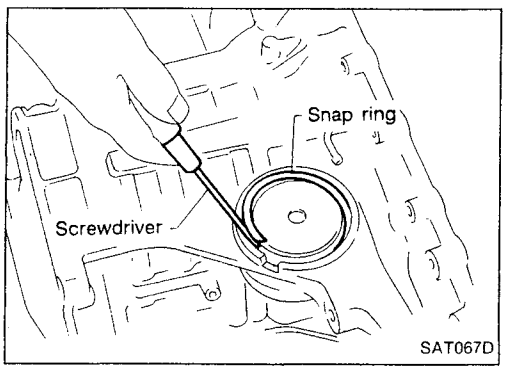

53. Remove governor valve assembly according to the following procedures.
a. Remove snap ring using a screwdriver.

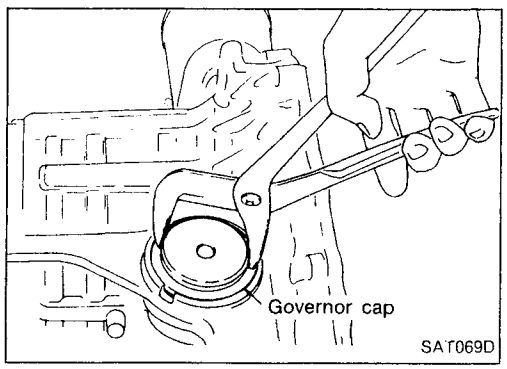

b. Remove governor cap using water pump pliers.
c. Remove O-ring from governor cap.

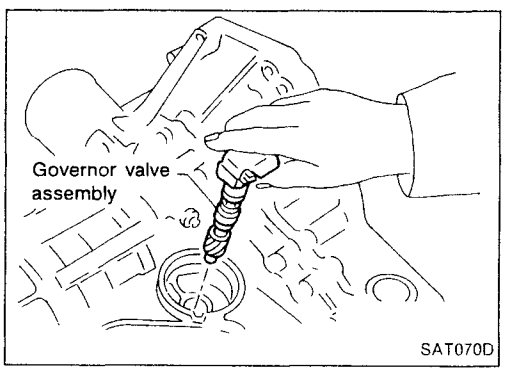

d. Remove governor valve assembly.

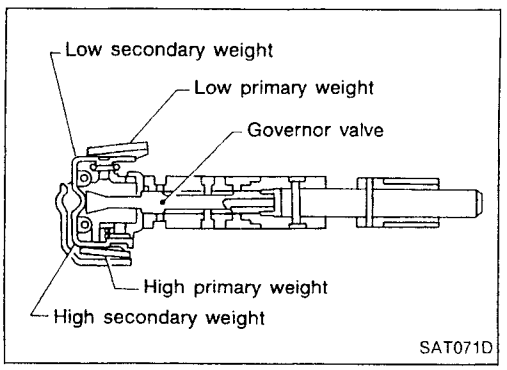

e. With low primary weight closed, place top of governor valve assembly down to make sure governor valve properly lowers under its own weight.
f. Place top of governor assembly down. Operate both low and high secondary weights to make sure governor valve functions properly.

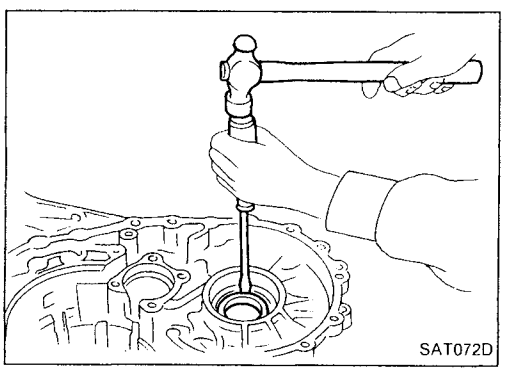

54. Remove side oil seal from transmission case using a screwdriver.
- **Be careful not to damage case.**

AT

Simpo PDF Merge and Split Unregistered Version - http://www.simpopdf.com

Manual Shaft and Throttle Lever

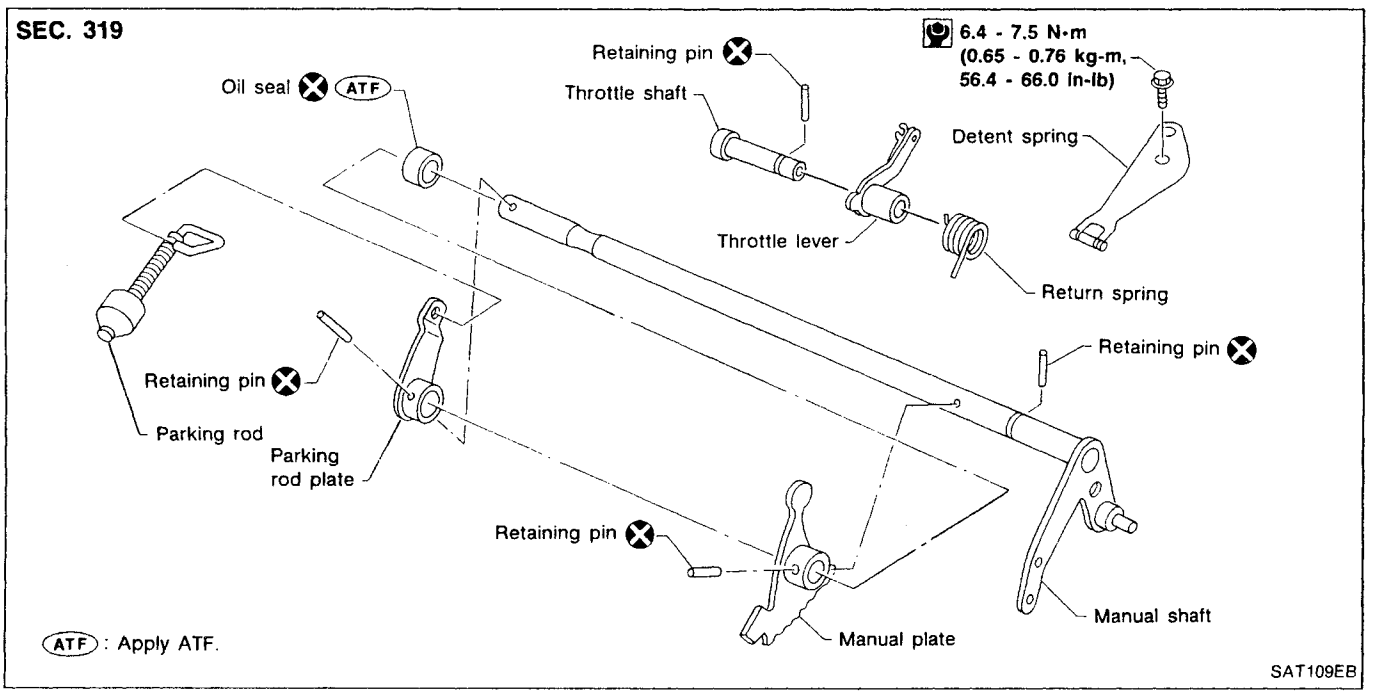

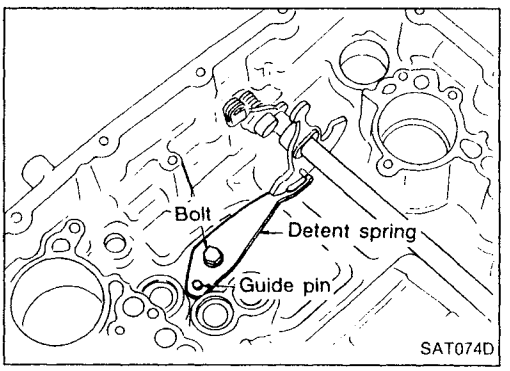

REMOVAL

1. Remove detent spring from transmission case.

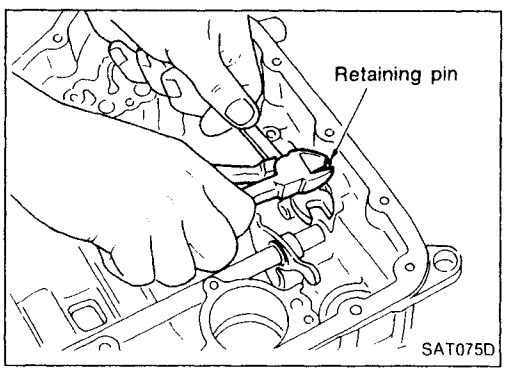

2. Pull out throttle shaft retaining pin, then draw out throttle shaft from transmission case.

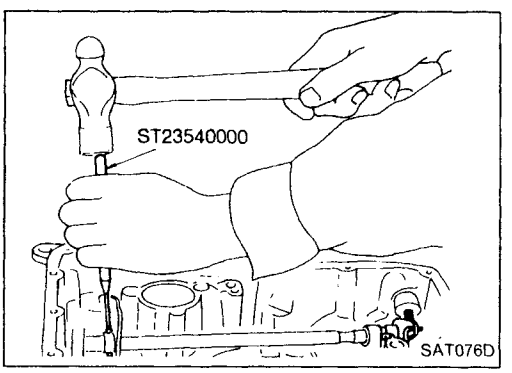

3. Drive out manual plate retaining pin.

Simpo PDF Merge and Split Unregistered Version - http://www.simpopdf.com

Manual Shaft and Throttle Lever (Cont'd)

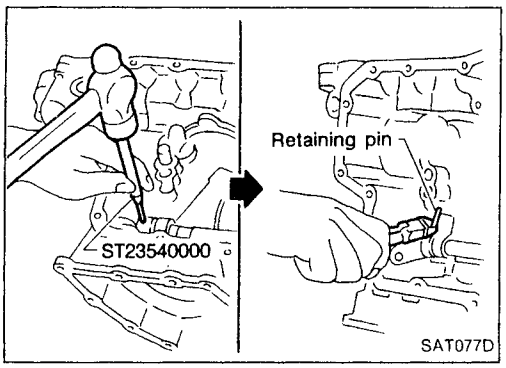

4. Drive and then pull out parking rod plate retaining pin.

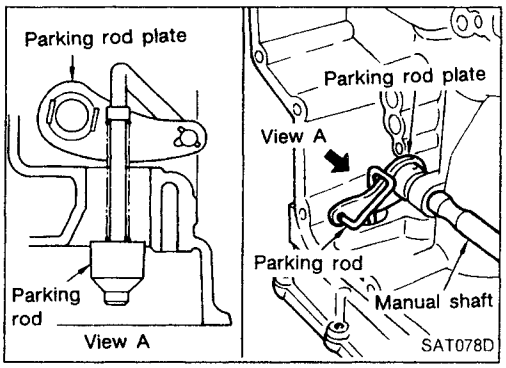

5. Remove parking rod plate from manual shaft.
6. Draw out parking rod from transmission case.

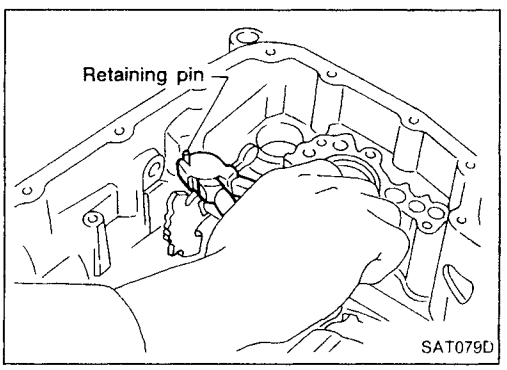

7. Pull out manual shaft retaining pin.
8. Remove manual shaft and manual plate from transmission case.

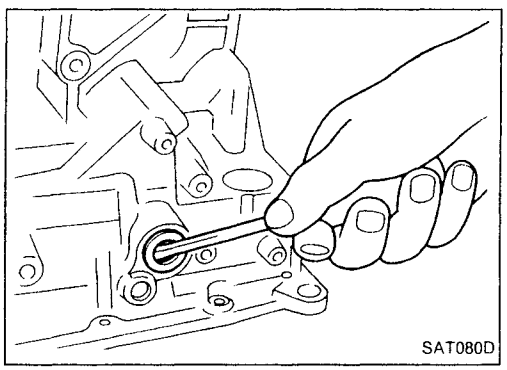

9. Remove manual shaft oil seal.

INSPECTION

- Check component parts for wear or damage. Replace if necessary.

AT

Simpo PDF Merge and Split Unregistered Version - http://www.simpopdf.com

Manual Shaft and Throttle Lever (Cont'd)

INSTALLATION

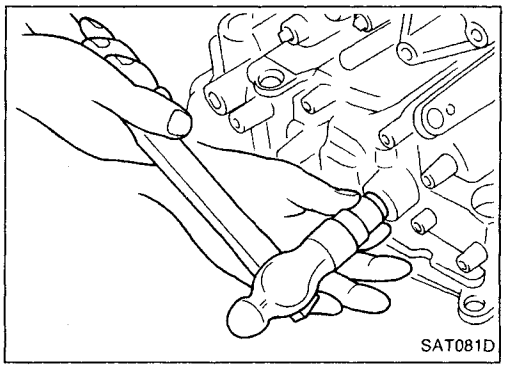

1. Install manual shaft oil seal.
   - **Apply ATF to outer surface of oil seal.**

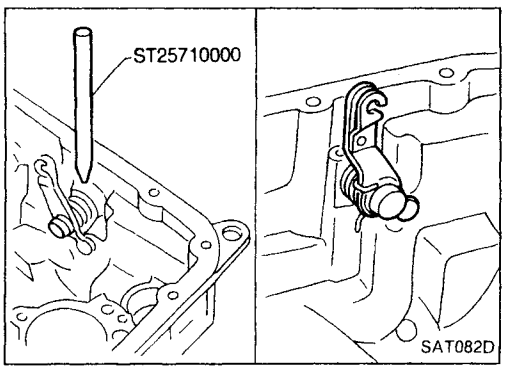

2. Install throttle lever and return spring on throttle shaft.
3. Install throttle lever assembly on transmission case.

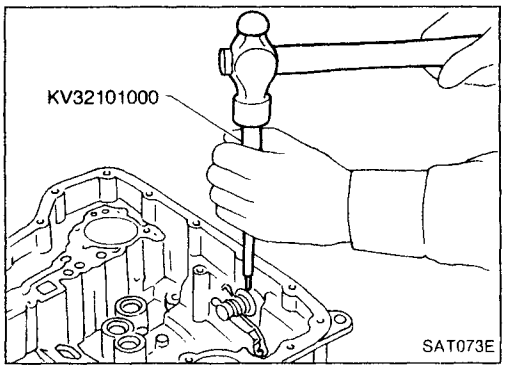

4. Align groove of throttle shaft and hole of transmission case.
5. Install throttle shaft retaining pin.

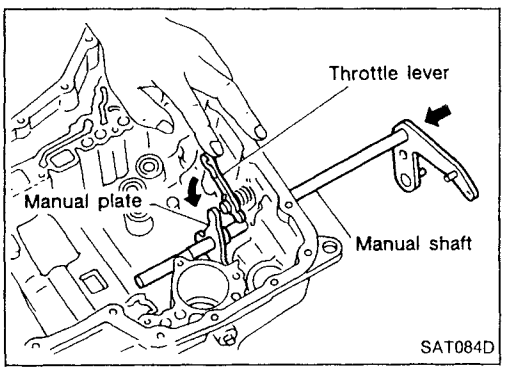

6. Move throttle lever in the direction of the arrow.
7. Install manual shaft and manual plate.

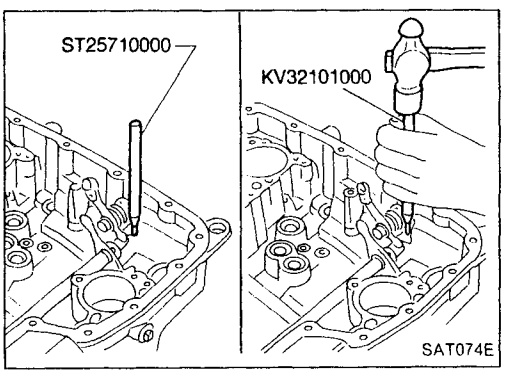

8. Align groove of manual shaft and hole of transmission case.
9. Install manual shaft retaining pin.

Simpo PDF Merge and Split Unregistered Version - http://www.simpopdf.com

Manual Shaft and Throttle Lever (Cont'd)

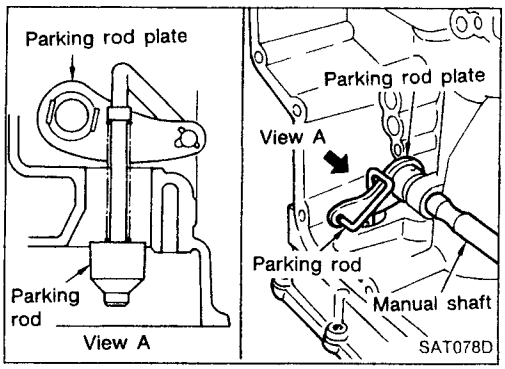

10. Install parking rod to parking rod plate.
11. Install parking rod assembly to manual shaft.

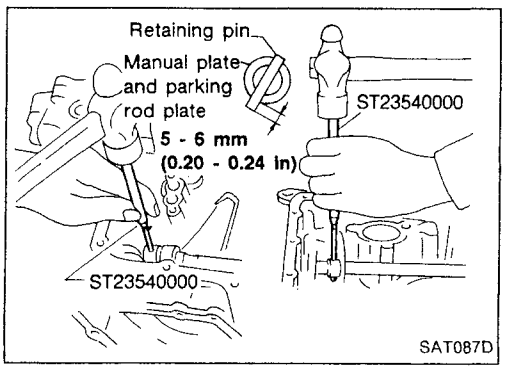

12. Install manual plate retaining pin and parking rod plate retaining pin.

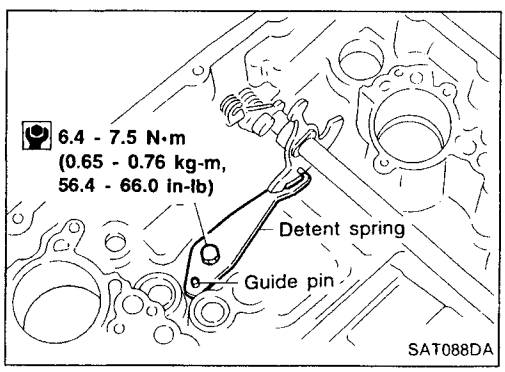

13. Install detent spring.

AT

Simpo PDF Merge and Split Unregistered Version - http://www.simpopdf.com

Oil Pump

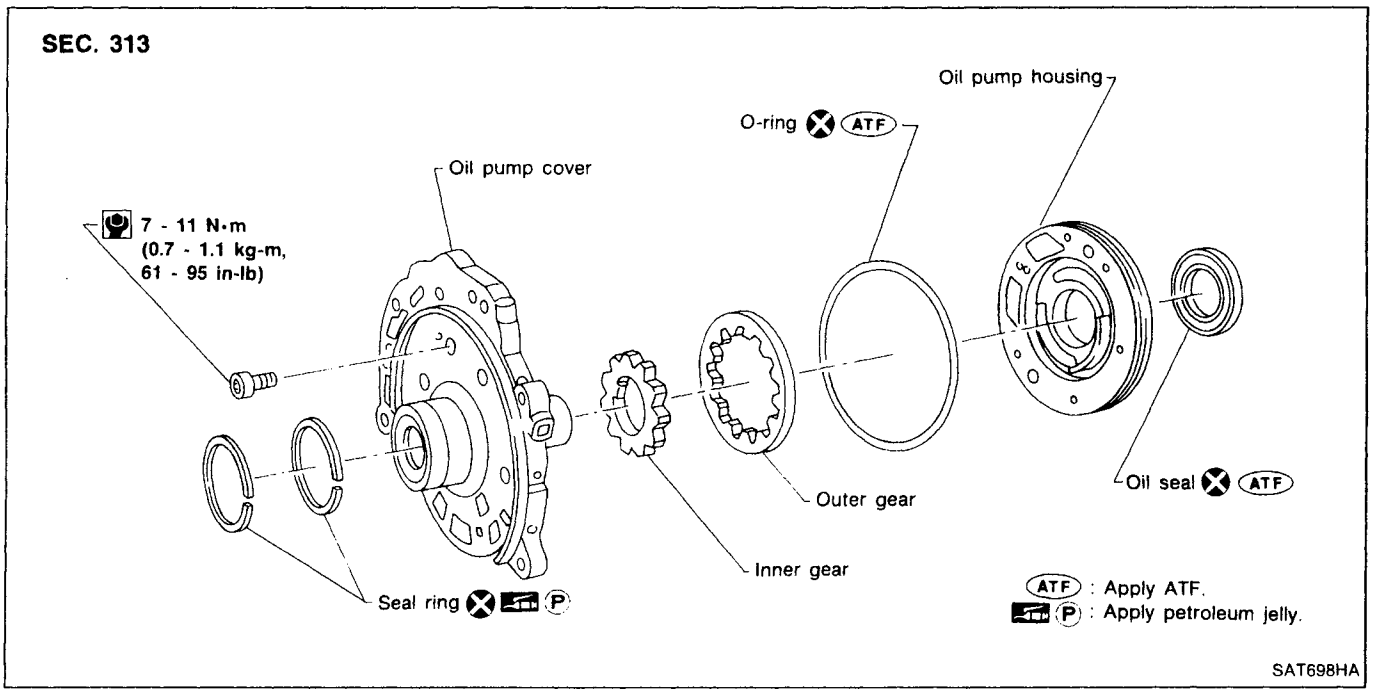

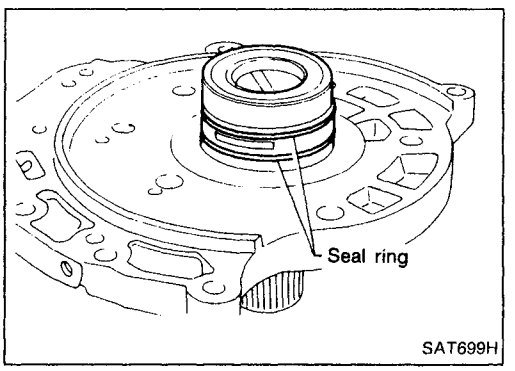

DISASSEMBLY

1. Remove seal rings.

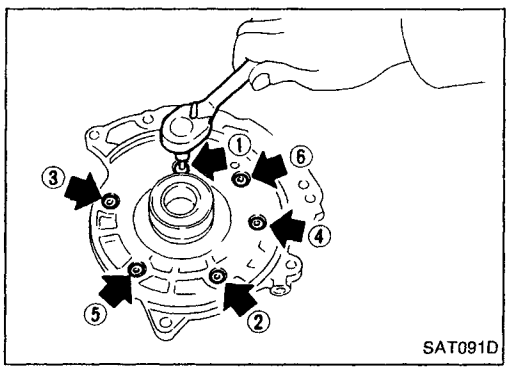

2. Loosen bolts in numerical order and remove oil pump cover.

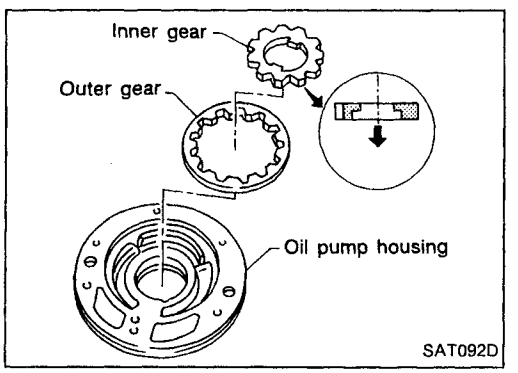

3. Remove inner and outer gear from oil pump housing.

Simpo PDF Merge and Split Unregistered Version - http://www.simpopdf.com

Oil Pump (Cont'd)

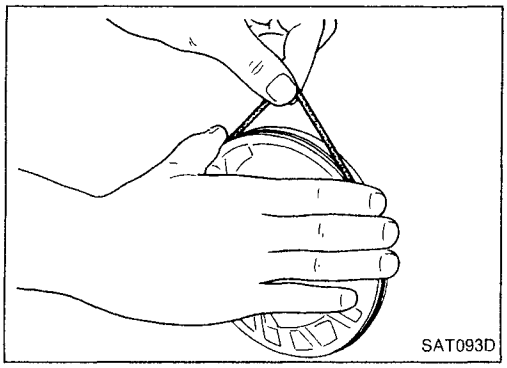
SAT093D

4. Remove O-ring from oil pump housing.

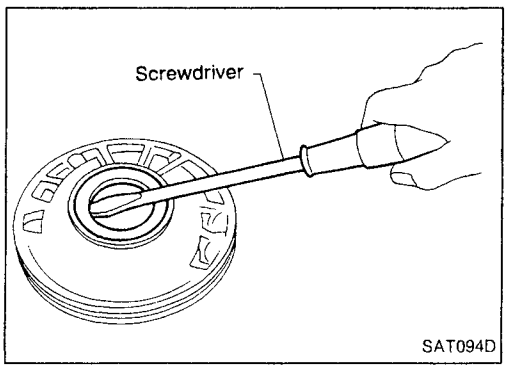

SAT094D

5. Remove oil pump housing oil seal.

INSPECTION

Oil pump housing, oil pump cover, inner gear and outer gear

- Check for wear or damage.

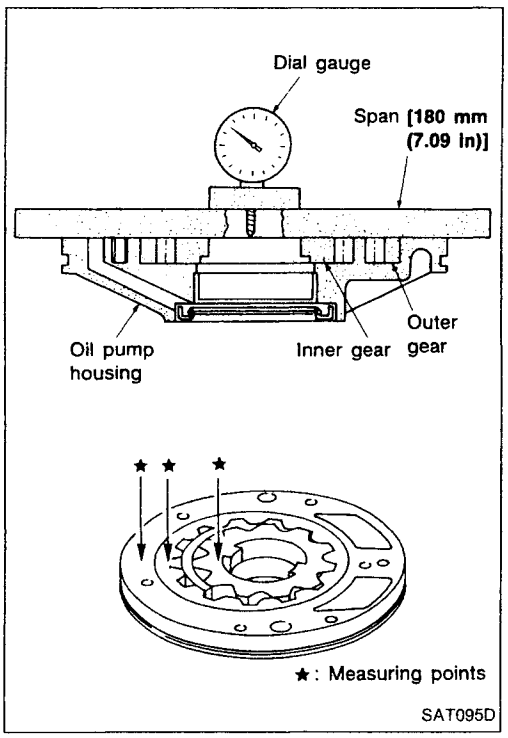

SAT095D

Side clearance

- Measure side clearance of inner and outer gears in at least four places around each outside edge. Maximum measured values should be within specified ranges.
  Standard clearance:
  0.02 - 0.04 mm (0.0008 - 0.0016 in)
- If clearance is below standard, select inner and outer gears as a set to assure clearance within specifications.
  Inner and outer gear:
  Refer to SDS, AT-169.
- If clearance is more than standard, replace whole oil pump assembly except oil pump cover.

Simpo PDF Merge and Split Unregistered Version - http://www.simpopdf.com

Oil Pump (Cont'd)

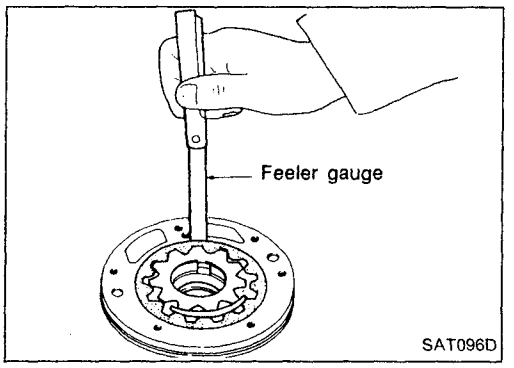

- Measure clearance between outer gear and oil pump housing.
  Standard clearance:
  0.08 - 0.15 mm (0.0031 - 0.0059 in)
- If not within standard clearance, replace whole oil pump assembly except oil pump cover.

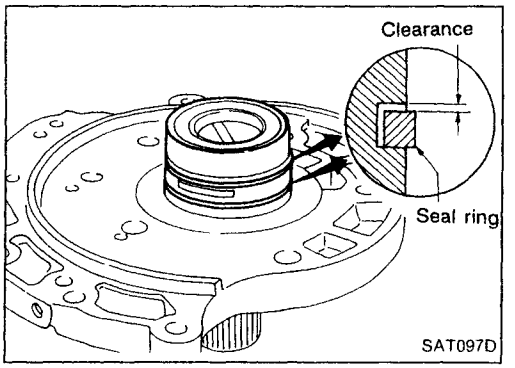

Seal ring clearance

- Install new seal rings onto oil pump cover.
- Measure clearance between seal ring and ring groove.
  Standard clearance:
  0.10 - 0.25 mm (0.0039 - 0.0098 in)
  Allowable limit:
  0.25 mm (0.0098 in)
- If not within wear limit, replace oil pump cover assembly.

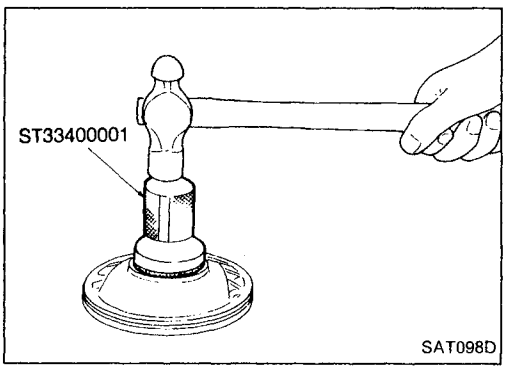

ASSEMBLY

1. Install oil seal on oil pump housing.

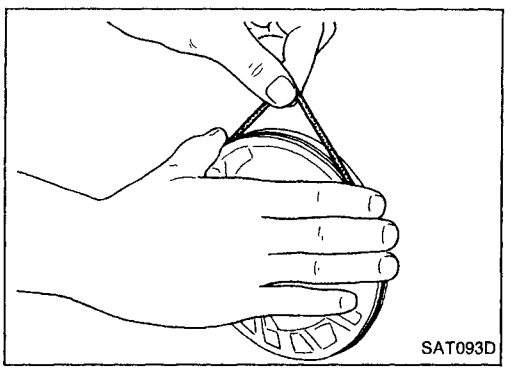

2. Install O-ring on oil pump housing.
- **Apply ATF to O-ring.**

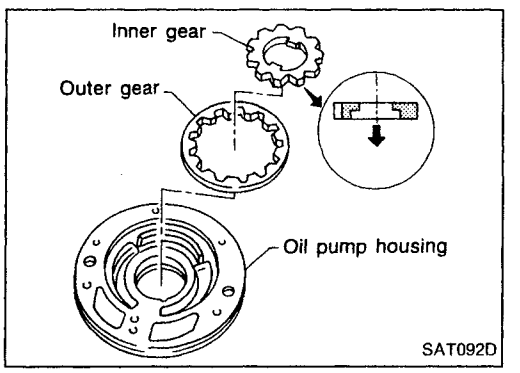

3. Install inner and outer gears on oil pump housing.
- **Take care with the direction of the inner gear.**

Simpo PDF Merge and Split Unregistered Version - http://www.simpopdf.com

Oil Pump (Cont'd)

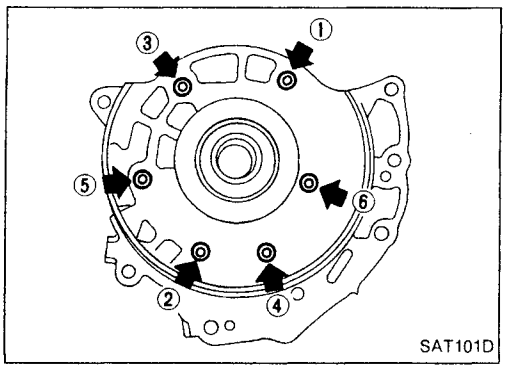

4. Install oil pump cover on oil pump housing.
a. Wrap masking tape around splines of oil pump cover assembly to protect seal. Position oil pump cover assembly on oil pump housing assembly, then remove masking tape.
b. Tighten bolts in numerical order.

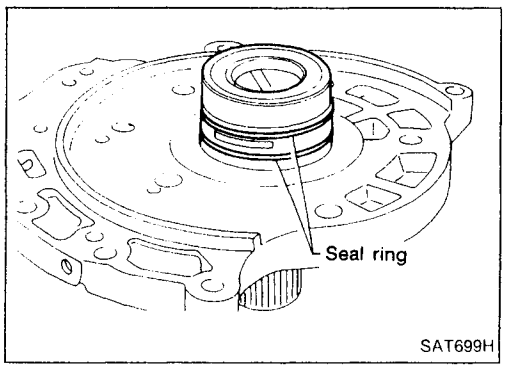

5. Install new seal rings carefully after packing ring groove with petroleum jelly.

- **Do not spread gap of seal ring excessively while installing. It may deform the ring.**

Simpo PDF Merge and Split Unregistered Version - http://www.simpopdf.com

Control Valve Assembly

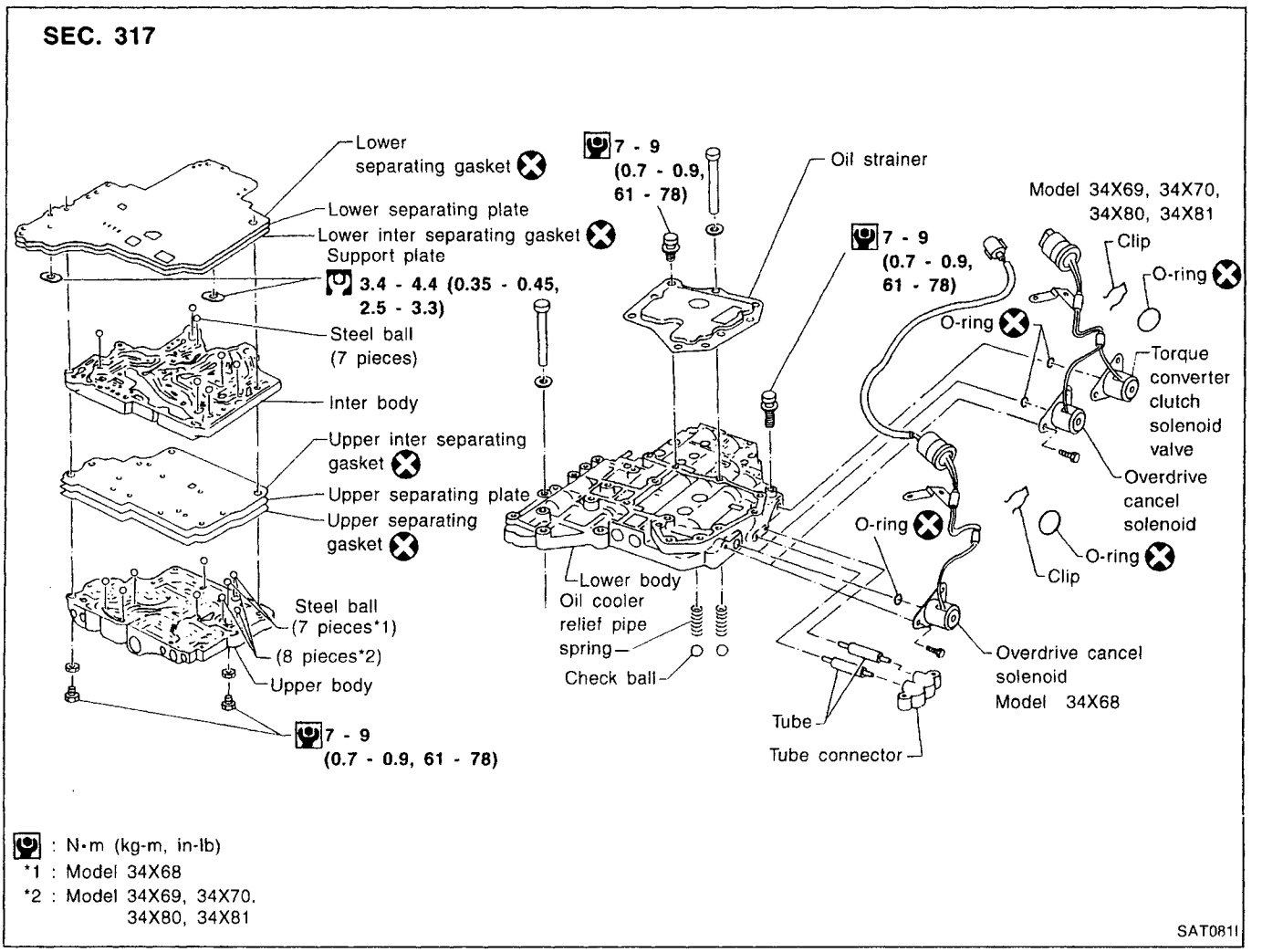

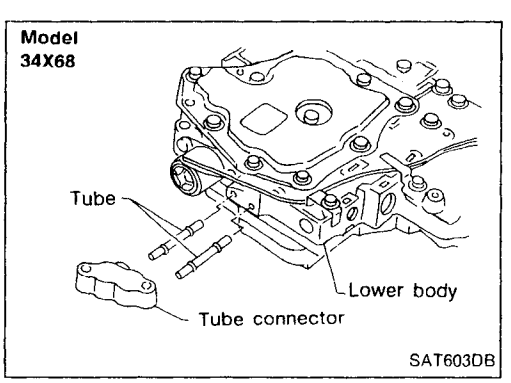

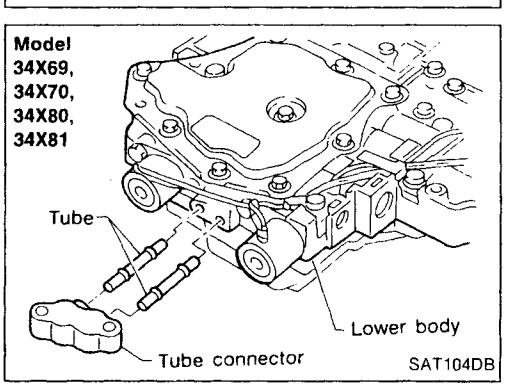

DISASSEMBLY

1. Remove tube connector and tube from control valve lower body.

Simpo PDF Merge and Split Unregistered Version - http://www.simpopdf.com

Control Valve Assembly (Cont'd)

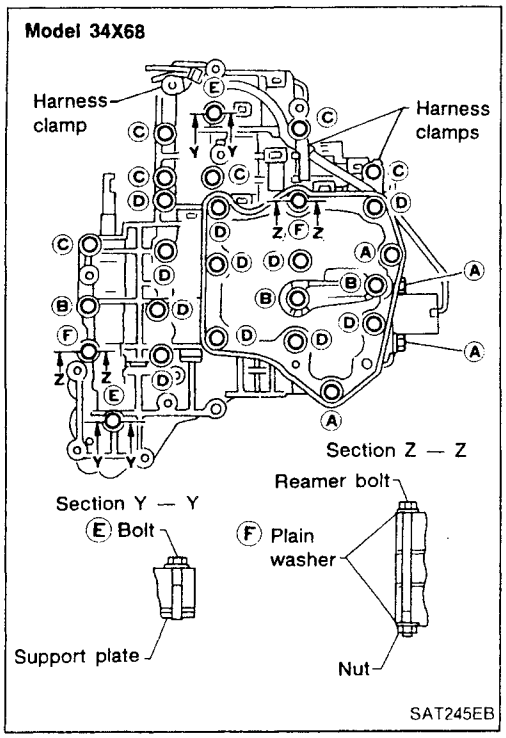

2. Disassemble upper, inter and lower bodies using the following procedures.

Bolt length, number and location:

Without torque converter clutch solenoid valve

Bolt symbol	Ⓐ	Ⓑ	Ⓒ	Ⓓ	Ⓔ	Ⓕ
Bolt length "ℓ" ℓ mm (in)	13.5 (0.531)	58.0 (2.283)	40.0 (1.575)	66.0 (2.598)	33.0 (1.299)	78.0 (3.071)
Number of bolts	4	3	6	11	2	2

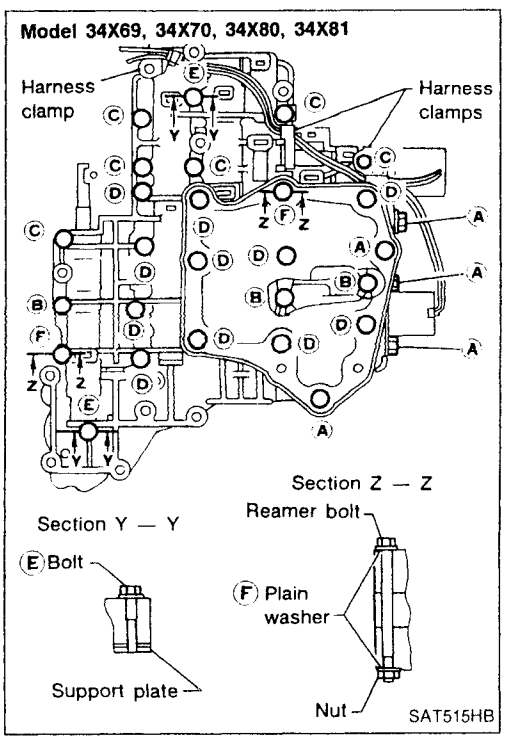

With torque converter clutch solenoid valve

Bolt symbol	Ⓐ	Ⓑ	Ⓒ	Ⓓ	Ⓔ	Ⓕ
Bolt length "ℓ" ℓ mm (in)	13.5 (0.531)	58.0 (2.283)	40.0 (1.575)	66.0 (2.598)	33.0 (1.299)	78.0 (3.071)
Number of bolts	5	3	6	11	2	2

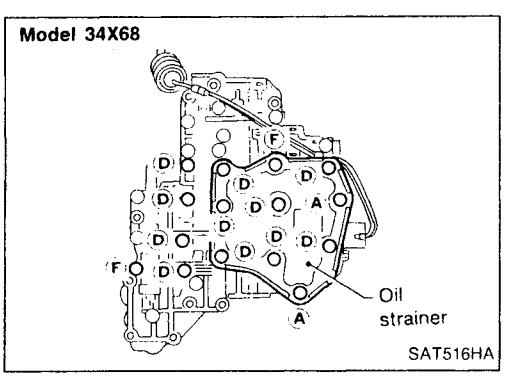

a. Remove bolts Ⓐ, Ⓓ and Ⓕ shown in the illustration.
b. Remove oil strainer from control valve assembly.

AT

Simpo PDF Merge and Split Unregistered Version - http://www.simpopdf.com

Control Valve Assembly (Cont'd)

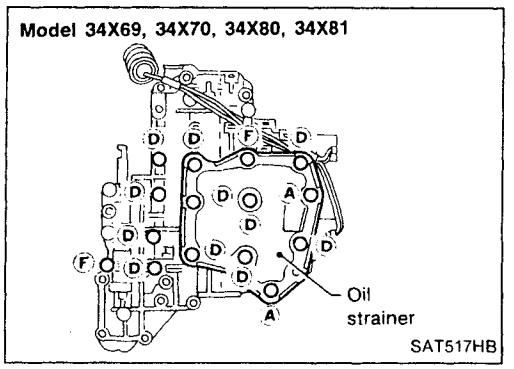

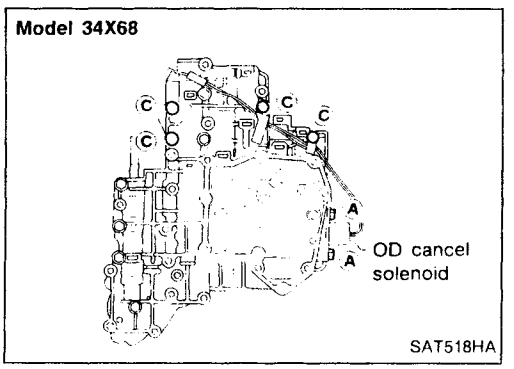

c. Remove OD cancel solenoid from control valve assembly. (Model 34X68)

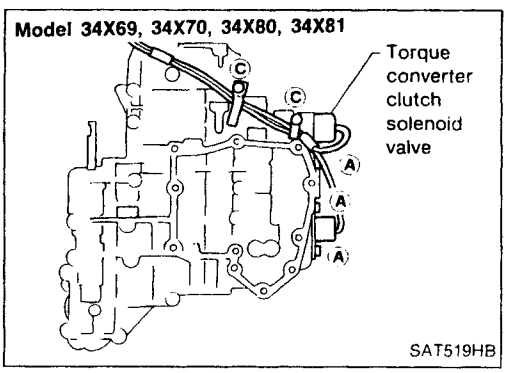

d. Remove OD cancel solenoid and torque converter clutch solenoid valve from control valve assembly. (Model 34X69, 34X70, 34X80, 34X81)

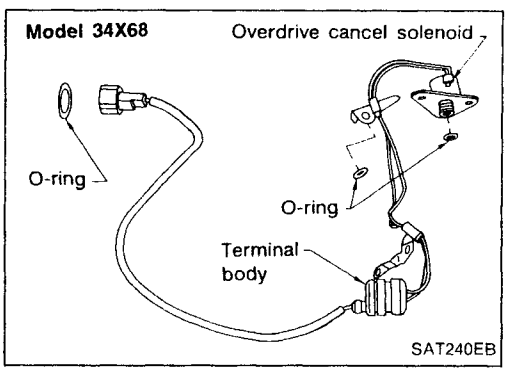

e. Remove O-rings from OD cancel solenoid, and harness terminal body. (Model 34X68)

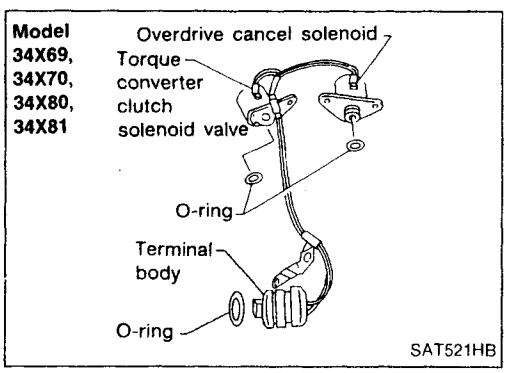

f. Remove O-rings from OD cancel solenoid, torque converter clutch solenoid valve and harness terminal body. (Model 34X69, 34X70, 34X80, 34X81)

Simpo PDF Merge and Split Unregistered Version - http://www.simpopdf.com

Control Valve Assembly (Cont'd)

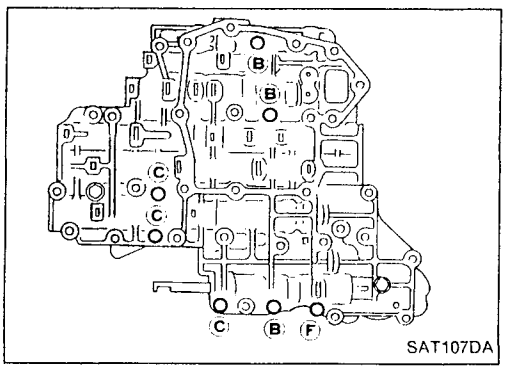

SAT107DA

g. Place upper body facedown, and remove bolts.

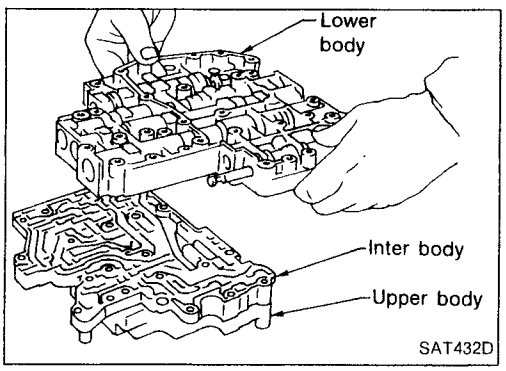

SAT432D

h. Remove lower body from inter body and upper body.

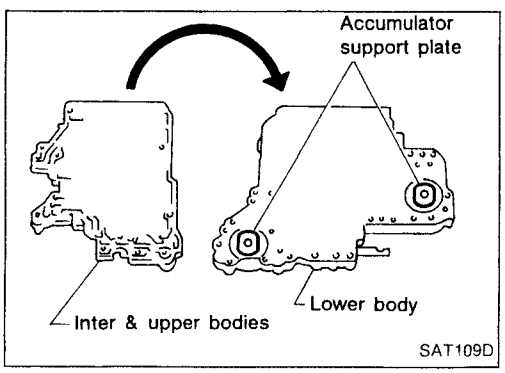

SAT109D

i. Turn over lower body, and remove accumulator support plate.

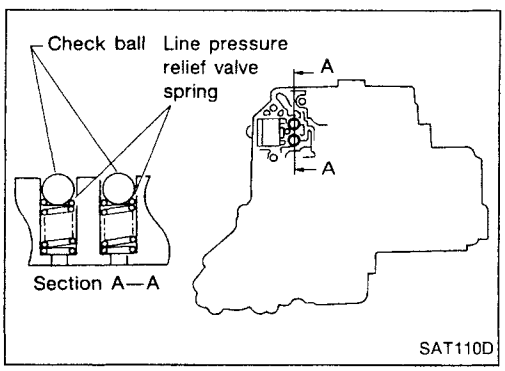

SAT110D

j. Remove separating plate and separating gaskets from lower body.
k. Remove steel balls and relief valve springs from lower body.

- **Be careful not to lose steel balls and relief valve springs.**

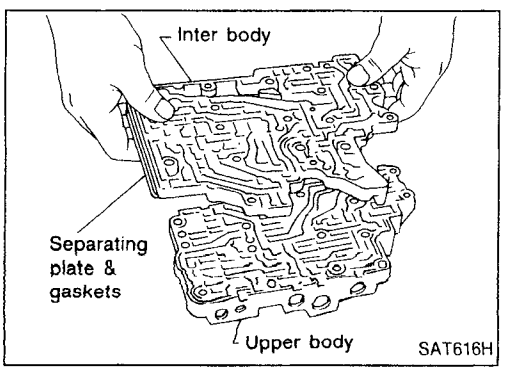

SAT616H

l. Remove inter body from upper body.

AT

Simpo PDF Merge and Split Unregistered Version - http://www.simpopdf.com

Control Valve Assembly (Cont'd)

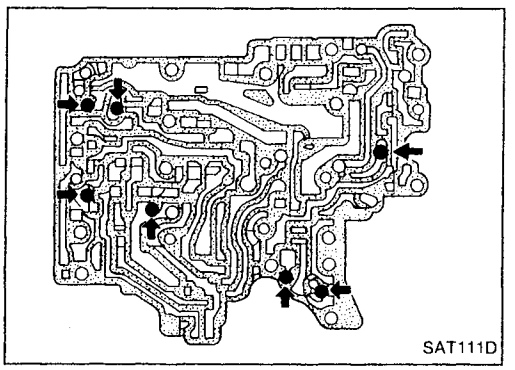
SAT111D

m. Check to see that steel balls are properly positioned in inter body and then remove them.

- **Be careful not to lose steel balls.**

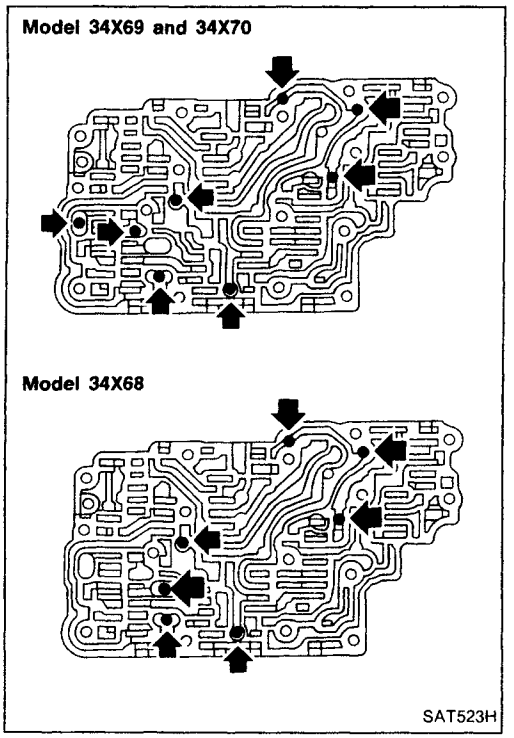

SAT523H

n. Remove separating plate and separating gaskets from upper body.

o. Check to see that steel balls are properly positioned in upper body and then remove them.

- **Be careful not to lose steel balls.**

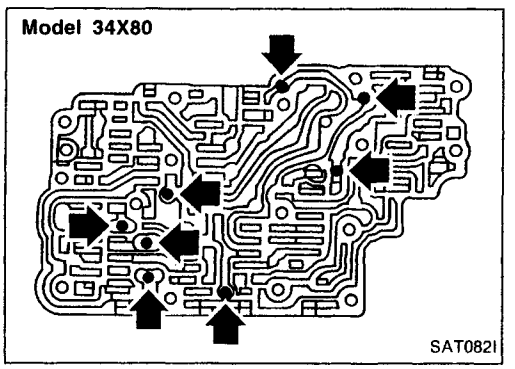

SAT082I

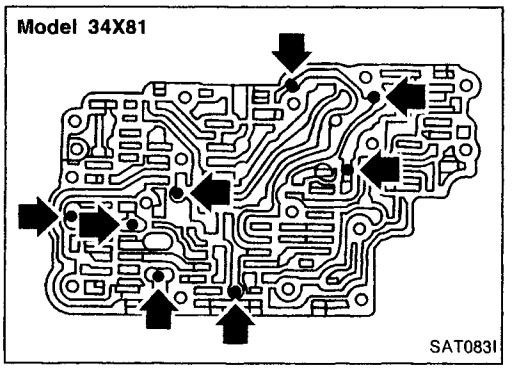

SAT083I

Simpo PDF Merge and Split Unregistered Version - http://www.simpopdf.com

Control Valve Assembly (Cont'd)

INSPECTION

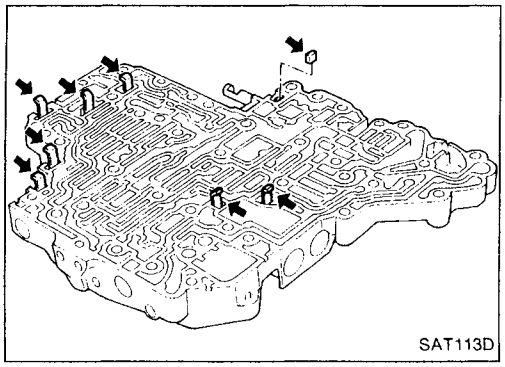
SAT113D

Lower and upper bodies

- Check to see that retainer plates are in proper position in lower body.

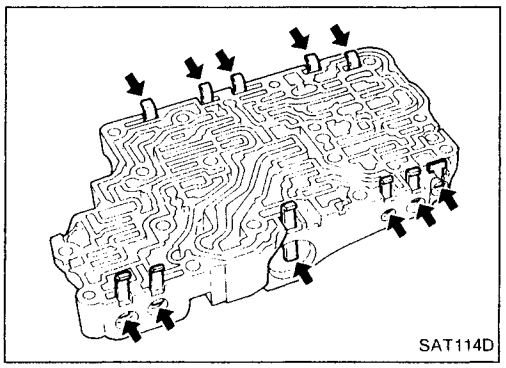
SAT114D

- Check to see that retainer plates are in proper position in upper body.
- **Be careful not to lose these parts.**

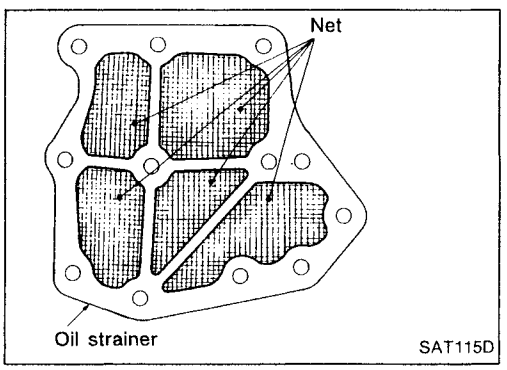

SAT115D

Oil strainer

- Check wire netting of oil strainer for damage.

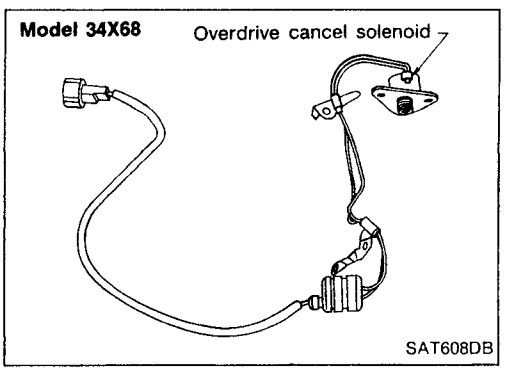

SAT608DB

OD cancel solenoid and torque converter clutch solenoid valve

- Measure resistance — Refer to "Electrical Components Inspection", AT-30.

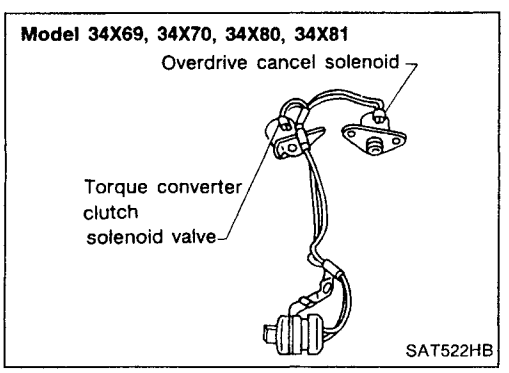

SAT522HB

AT

Simpo PDF Merge and Split Unregistered Version - http://www.simpopdf.com

Control Valve Assembly (Cont'd)

Oil cooler relief valve spring

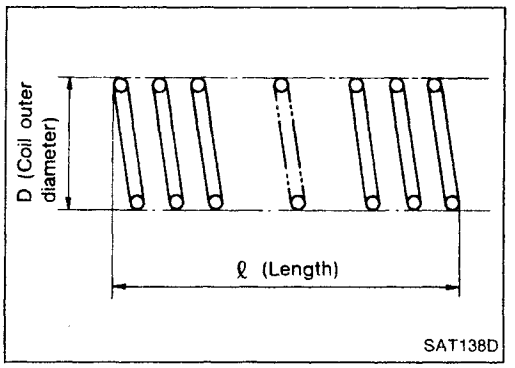

- Check for damage or deformation.
- Measure free length and outer diameter of valve spring.
  Inspection standard:
  Refer to SDS, AT-167.

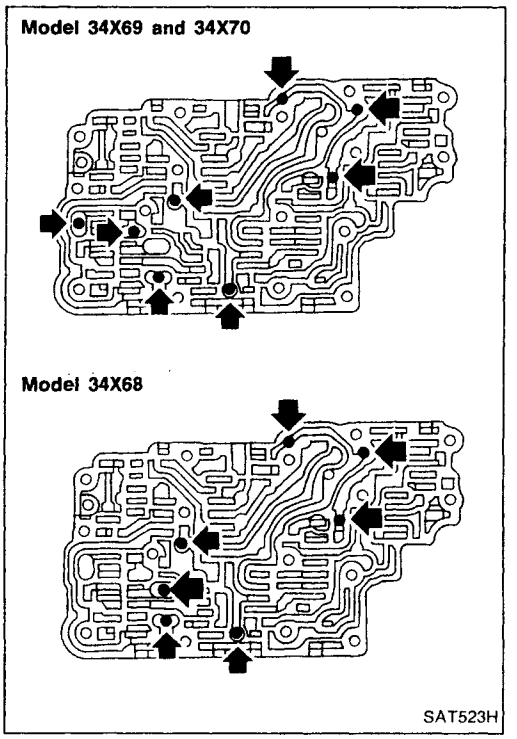

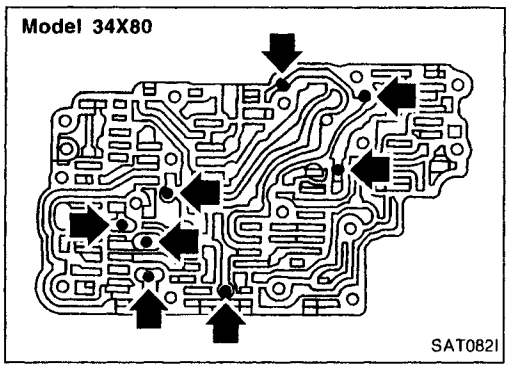

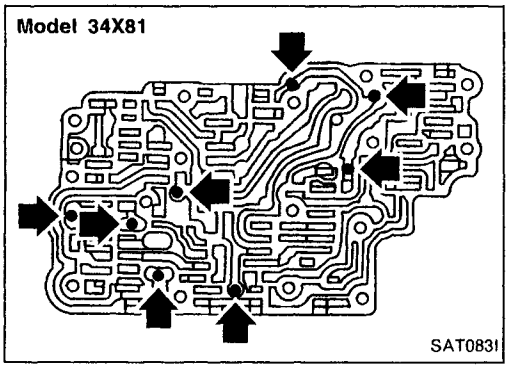

ASSEMBLY

1. Install upper, inter and lower body.

a. Place oil circuit of upper body face up. Install steel balls in their proper positions.

Simpo PDF Merge and Split Unregistered Version - http://www.simpopdf.com

Control Valve Assembly (Cont'd)

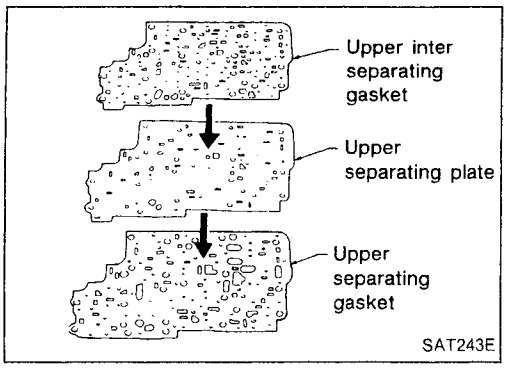

b. Install new upper separating gasket, new upper inter separating gasket and upper separating plate in order shown in illustration.

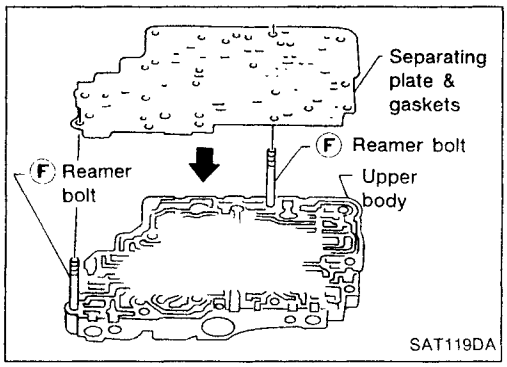

c. Install reamer bolts Ⓕ from bottom of upper body and install separating gaskets and separating plate as a set on upper body using reamer bolts as guides.

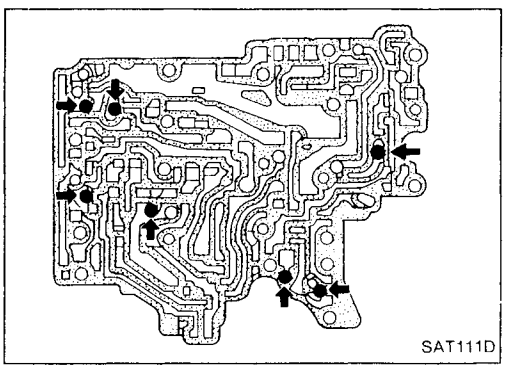

d. Place lower body side of inter body face up. Install steel balls in their proper positions.

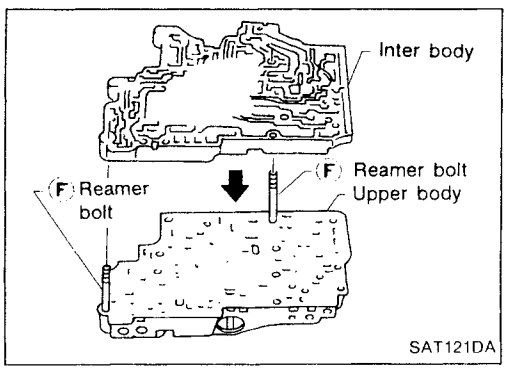

e. Install inter body on upper body using reamer bolts Ⓕ as guides.

- **Be careful not to dislocate or drop steel balls.**

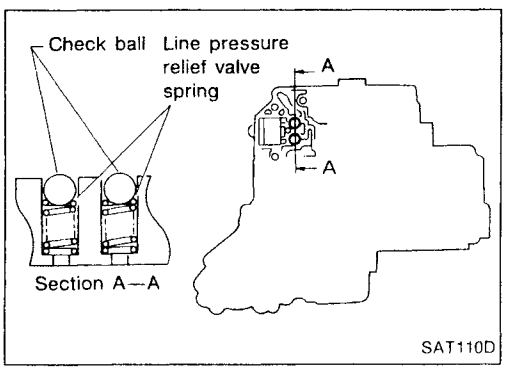

f. Install steel balls and relief valve springs in their proper positions in lower body.

AT

Simpo PDF Merge and Split Unregistered Version - http://www.simpopdf.com

Control Valve Assembly (Cont'd)

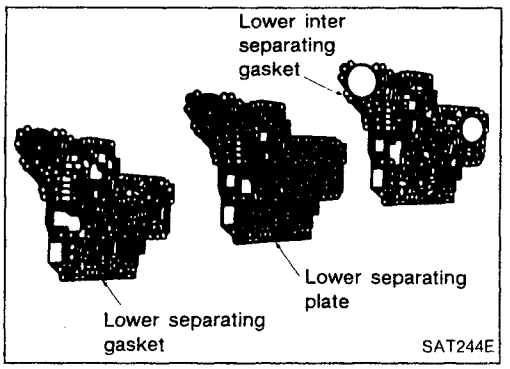

g. Install new lower separating gasket, new lower inter separating gasket and lower separating plate in order shown in illustration.

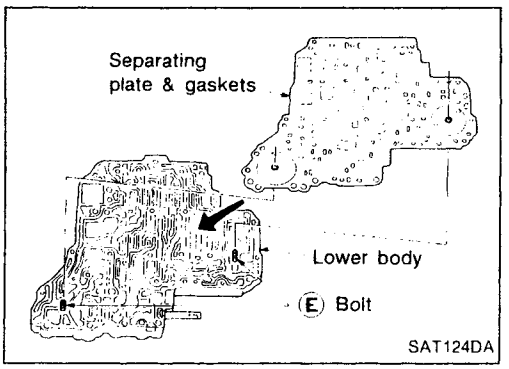

h. Install support plate fixing bolts Ⓔ from bottom of lower body and install separating gaskets and separating plate as a set on lower body using bolts Ⓔ as guides.

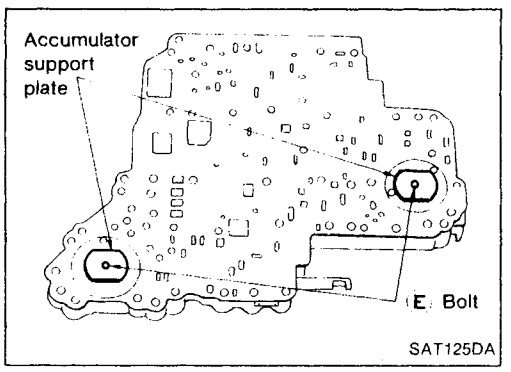

i. Temporarily install support plates on lower body.

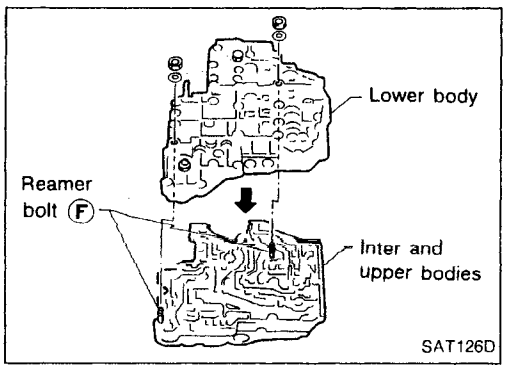

j. Install lower body on inter body using reamer bolts Ⓕ as guides and tighten reamer bolts Ⓕ slightly.

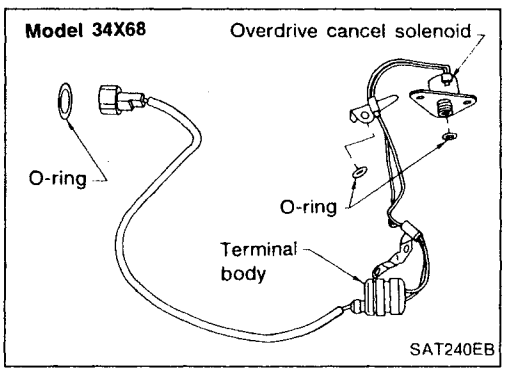

2. Install O-rings to OD cancel solenoid, torque converter clutch solenoid valve and harness connector.

- **Apply ATF to O-rings.**

Simpo PDF Merge and Split Unregistered Version - http://www.simpopdf.com

Control Valve Assembly (Cont'd)

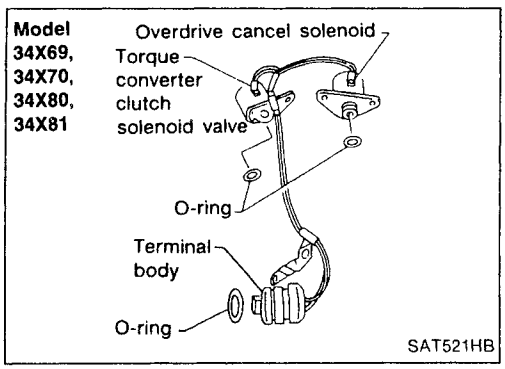

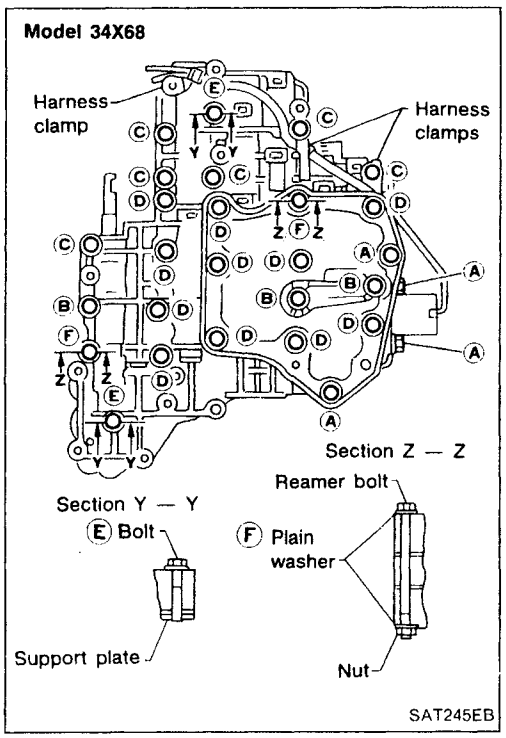

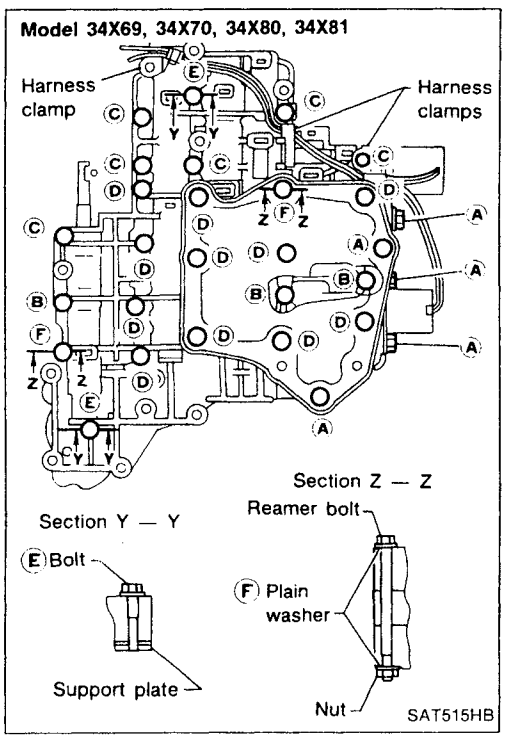

3. Install and tighten bolts.

Bolt length, number and location:

Without torque converter clutch solenoid valve

Bolt symbol	Ⓐ	Ⓑ	Ⓒ	Ⓓ	Ⓔ	Ⓕ
Bolt length "ℓ" ℓ mm (in)	13.5 (0.531)	58.0 (2.283)	40.0 (1.575)	66.0 (2.598)	33.0 (1.299)	78.0 (3.071)
Number of bolts	4	3	6	11	2	2
Tightening torque N·m (kg-m, in-lb)	7 - 9 (0.7 - 0.9, 61 - 78)				3.4 - 4.4 (0.35 - 0.45, 30.4 - 39.1)	7 - 9 (0.7 - 0.9, 61 - 78)

With torque converter clutch solenoid valve

Bolt symbol	Ⓐ	Ⓑ	Ⓒ	Ⓓ	Ⓔ	Ⓕ
Bolt length "ℓ" ℓ mm (in)	13.5 (0.531)	58.0 (2.283)	40.0 (1.575)	66.0 (2.598)	33.0 (1.299)	78.0 (3.071)
Number of bolts	5	3	6	11	2	2
Tightening torque N·m (kg-m, in-lb)	7 - 9 (0.7 - 0.9, 61 - 78)				3.4 - 4.4 (0.35 - 0.45, 30.4 - 39.1)	7 - 9 (0.7 - 0.9, 61 - 78)

AT

Simpo PDF Merge and Split Unregistered Version - http://www.simpopdf.com

Control Valve Assembly (Cont'd)

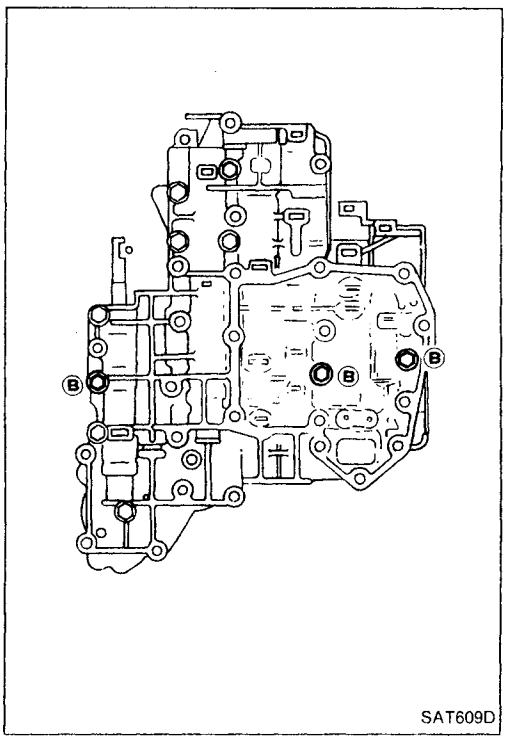

SAT609D

a. Install and tighten bolts Ⓑ slightly.

Model 34X68

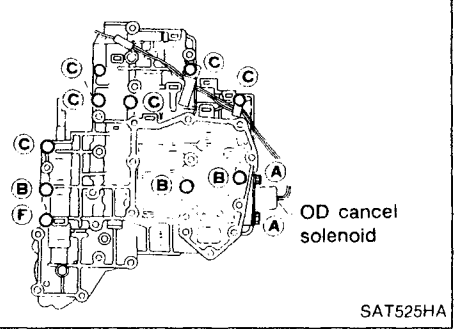

SAT525HA

b. Install OD cancel solenoid to lower body. (Model 34X68)
c. Install OD cancel solenoid and torque converter clutch solenoid valve to lower body. (Except model 34X68)
d. Install and tighten bolts Ⓐ and Ⓒ slightly.
e. Remove both reamer bolts Ⓕ previously installed as guides. Install one reamer bolt Ⓕ (marked in illustration) from lower body side.
f. Tighten bolts Ⓐ, Ⓑ, Ⓒ and Ⓕ to specified torque.
   : 7 - 9 N·m (0.7 - 0.9 kg-m, 61 - 78 in-lb)

Model 34X69, 34X70, 34X80, 34X81

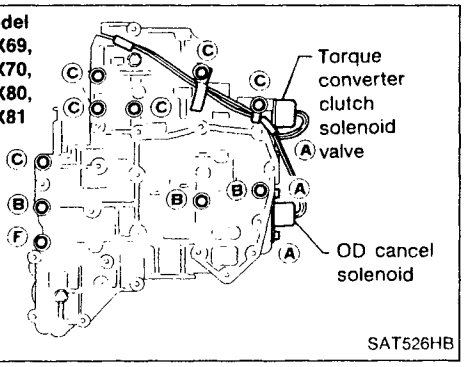

SAT526HB

Model 34X68

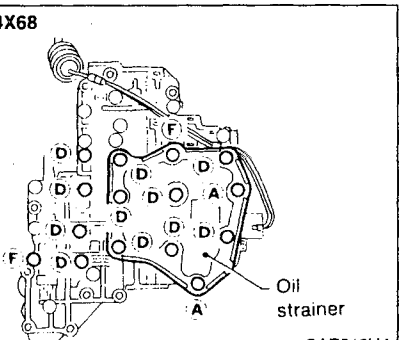

SAT516HA

g. Install oil strainer and the other bolt Ⓕ (marked in illustration), then tighten bolts Ⓐ, Ⓓ and Ⓕ to specified torque.
   : 7 - 9 N·m (0.7 - 0.9 kg-m, 61 - 78 in-lb)

Simpo PDF Merge and Split Unregistered Version - http://www.simpopdf.com

Control Valve Assembly (Cont'd)

Model 34X69, 34X70, 34X80, 34X81

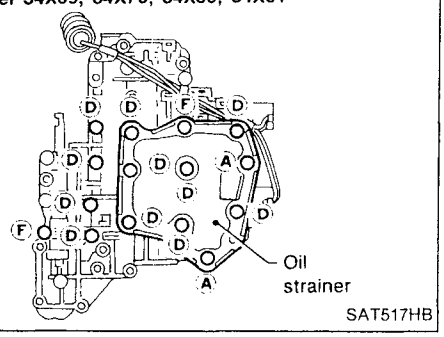

SAT517HB

Model 34X68

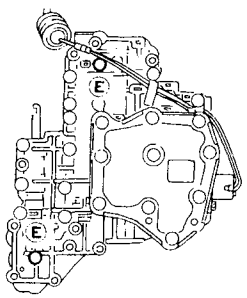

SAT529HA

h. Install support plates and tighten bolts Ⓔ to specified torque.

: **3.4 - 4.4 N·m (0.35 - 0.45 kg-m, 30.4 - 39.1 in-lb)**

Model 34X69, 34X70, 34X80, 34X81

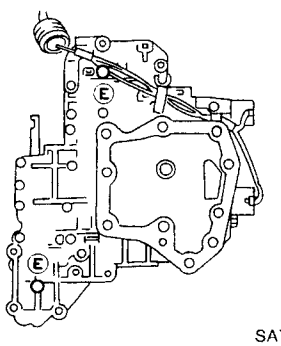

SAT530HB

Model 34X68

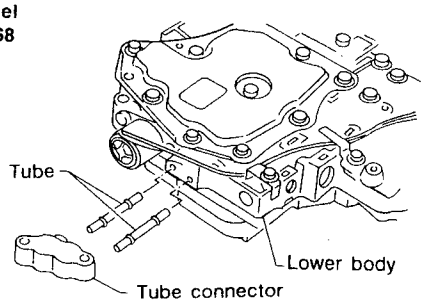

SAT603DB

i. Install tube connector and tubes to lower body.

- **Install oil circuit side of tube connector face up.**

Model 34X69, 34X70, 34X80, 34X81

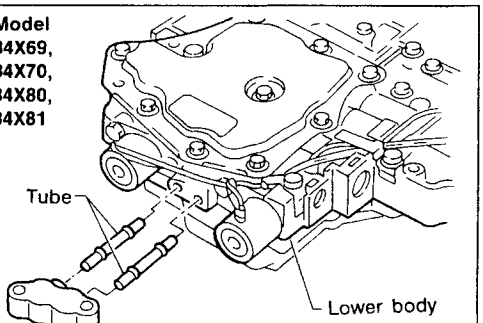

SAT104DB

AT

Simpo PDF Merge and Split Unregistered Version - http://www.simpopdf.com

Control Valve Upper Body

SEC. 317

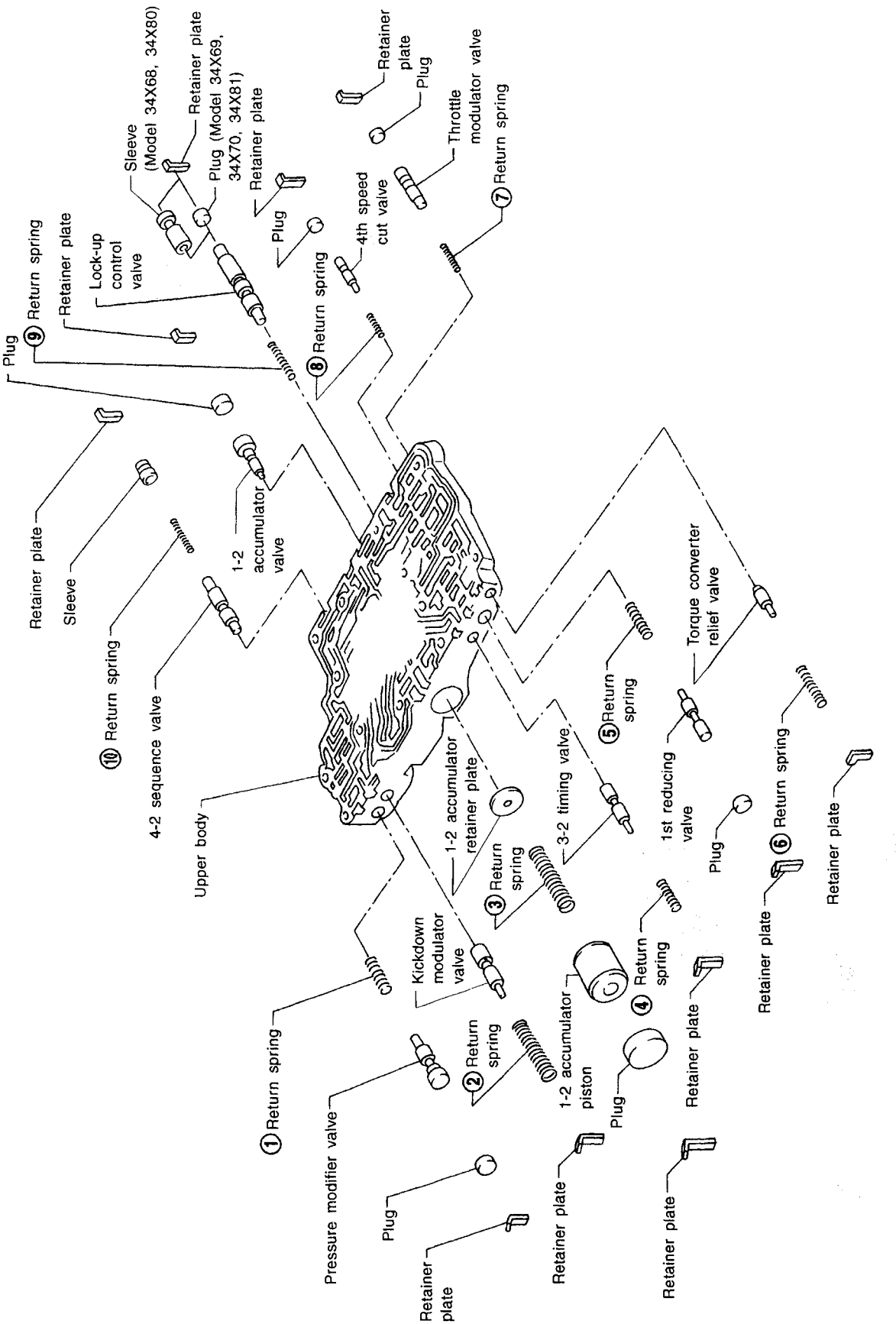

Apply ATF to all components before their installation.

Numbers preceding valve springs correspond with those shown in Spring Chart of SDS on page AT-167.

SAT202I

Simpo PDF Merge and Split Unregistered Version - http://www.simpopdf.com

Control Valve Upper Body (Cont'd)

DISASSEMBLY

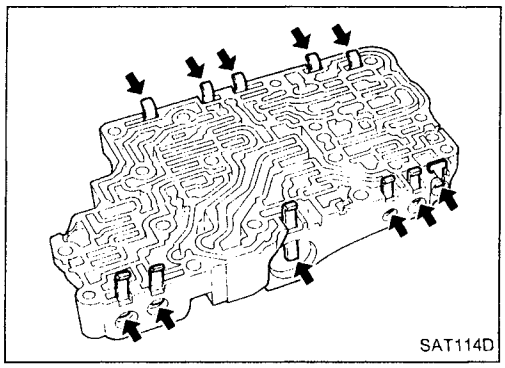

1. Remove valves at retainer plates.
- **Do not use a magnetic "hand".**

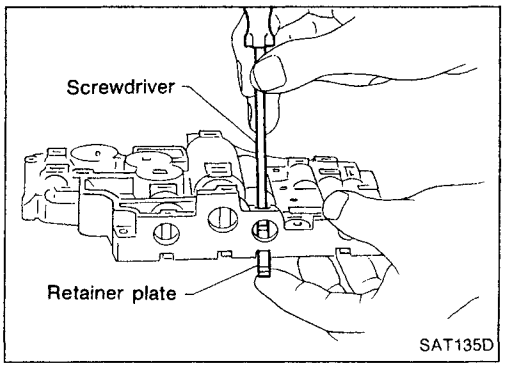

a. Use a screwdriver to remove retainer plates.

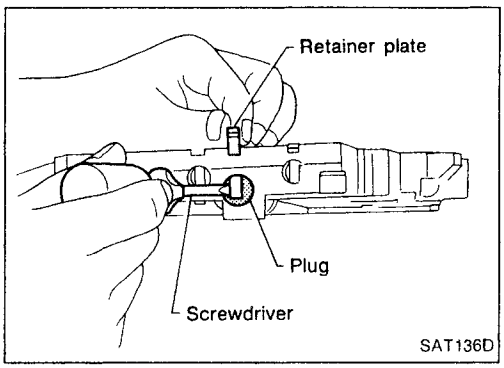

b. Remove retainer plates while holding spring, plugs and sleeves.
- **Remove plug slowly to prevent internal parts from jumping out.**

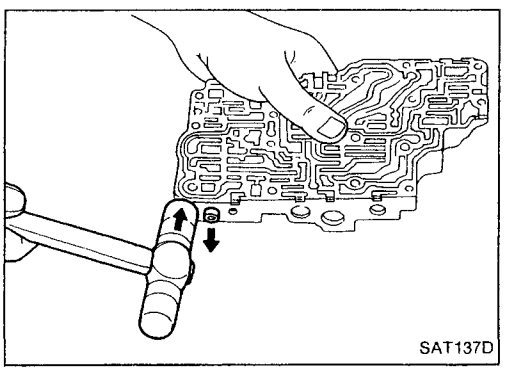

c. Place mating surface of valve face down, and remove internal parts.
- **If a valve is hard to remove, place valve body face down and lightly tap it with a soft hammer.**
- **Be careful not to drop or damage valves and sleeves.**

INSPECTION

Valve spring

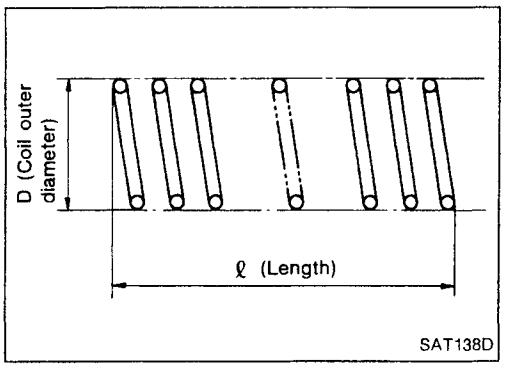

- Measure free length and outer diameter of each valve spring. Also check for damage or deformation.
  Inspection standard:
  Refer to SDS, AT-167.
- Replace valve springs if deformed or fatigued.

Control valves

- Check sliding surfaces of valves, sleeves and plugs.

AT

Simpo PDF Merge and Split Unregistered Version - http://www.simpopdf.com

Control Valve Upper Body (Cont'd)

ASSEMBLY

- **Lay the control valve body down when installing valves.**
- **Do not stand the control valve body on edge.**

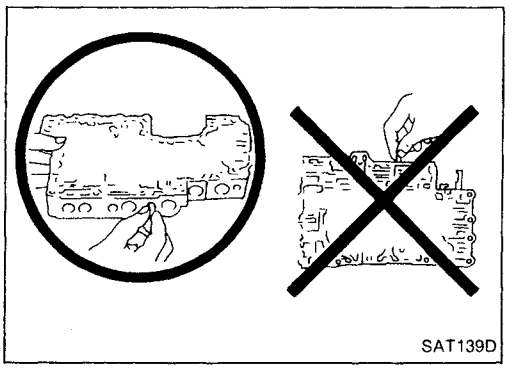
SAT139D

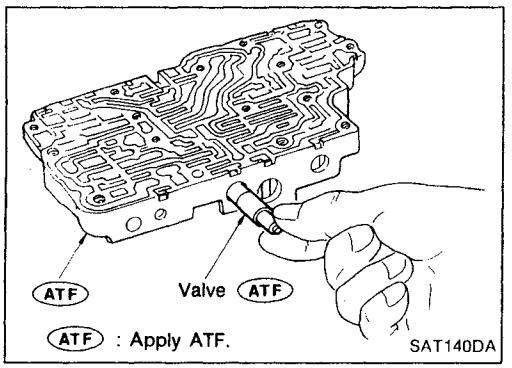

SAT140DA

1. Lubricate the control valve body and all valves with ATF. Install control valves by sliding them carefully into their bores.
- **Be careful not to scratch or damage valve body.**

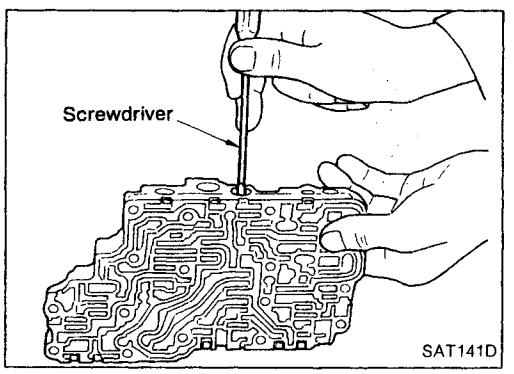

SAT141D

- Wrap a small screwdriver with vinyl tape and use it to insert the valves into their proper positions.

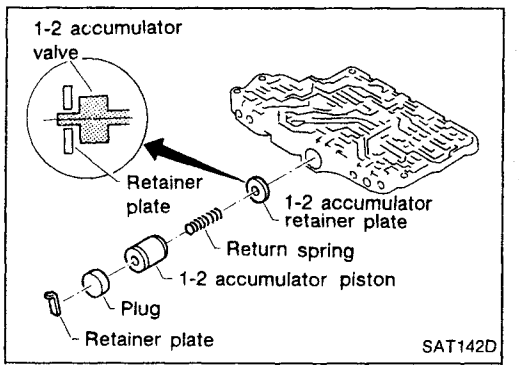

SAT142D

1-2 accumulator valve

- Install 1-2 accumulator valve. Align 1-2 accumulator retainer plate from opposite side of control valve body.
- Install return spring and 1-2 accumulator piston.

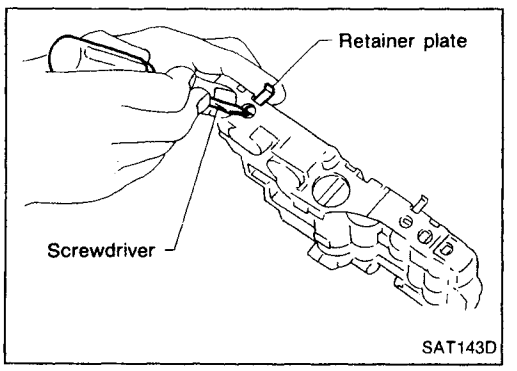

SAT143D

2. Install retainer plates.
- While pushing plug or return spring, install retainer plate.

Simpo PDF Merge and Split Unregistered Version - http://www.simpopdf.com

Control Valve Upper Body (Cont'd)

Retainer plate:

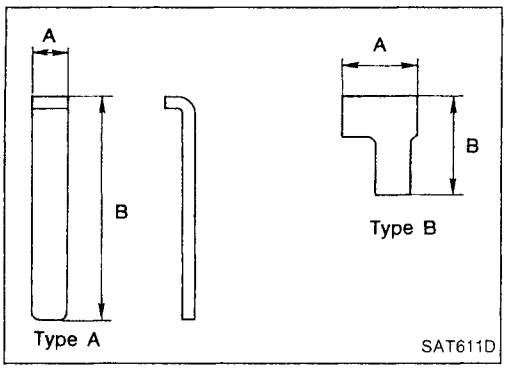

Unit: mm (in)

Name of control valves	Length A	Length B	Type
Pressure modifier valve	6.0 (0.236)	28.0 (1.102)	A
Lock-up control valve			
4-2 sequence valve			
Kickdown modulator valve	6.0 (0.236)	21.5 (0.846)	
3-2 timing valve			
1st reducing valve			
Throttle modulator valve			
4th speed cut valve			
1-2 accumulator valve	6.0 (0.236)	38.5 (1.516)	
Torque converter relief valve	13.0 (0.512)	17.0 (0.669)	B

- Install proper retainer plates.

AT

Simpo PDF Merge and Split Unregistered Version - http://www.simpopdf.com

Control Valve Lower Body

SEC. 317

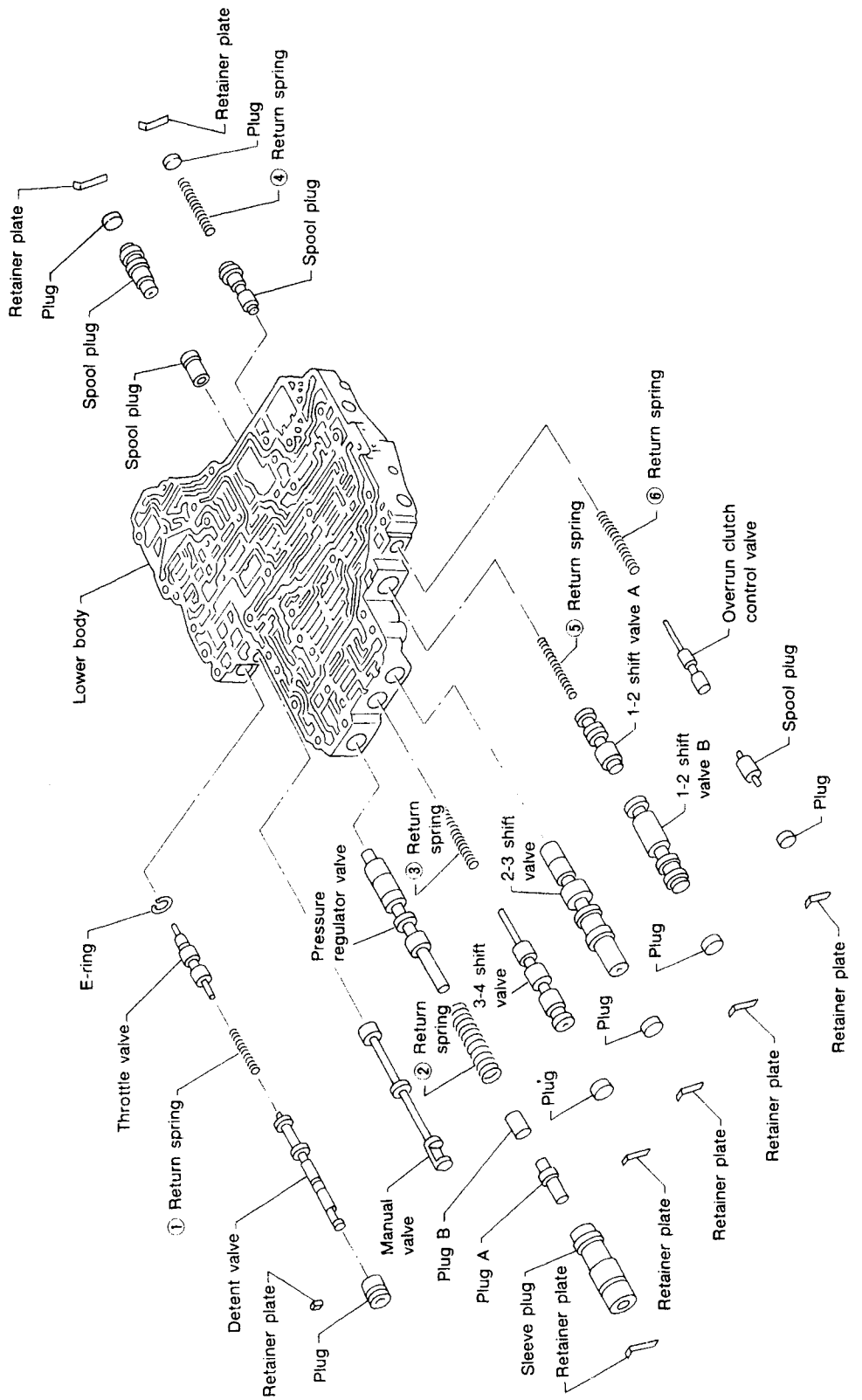

Apply ATF to all components before their installation.
Numbers preceding valve springs correspond with those shown in Spring Chart of SDS on page AT-167.

SAT532H

Simpo PDF Merge and Split Unregistered Version - http://www.simpopdf.com

Control Valve Lower Body (Cont'd)

DISASSEMBLY

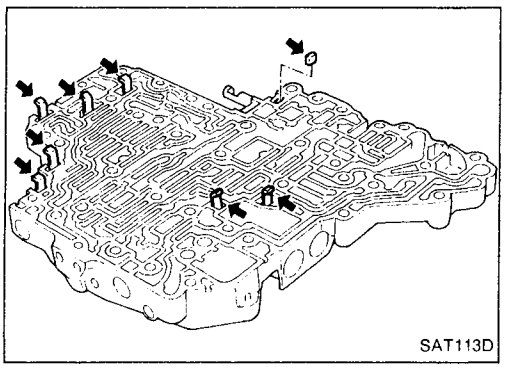
SAT113D

1. Remove valves at retainer plate.
   For removal procedures, refer to "DISASSEMBLY" in "Control Valve Upper Body", AT-87.

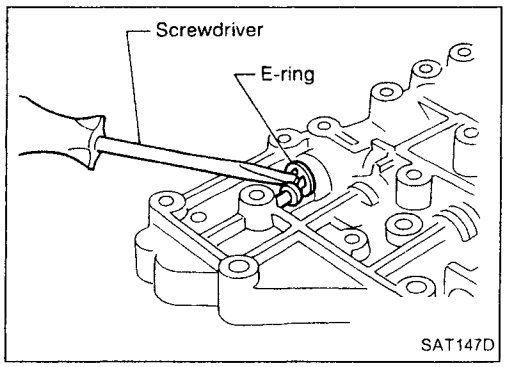

SAT147D

Throttle valve

- Remove throttle valve at E-ring.

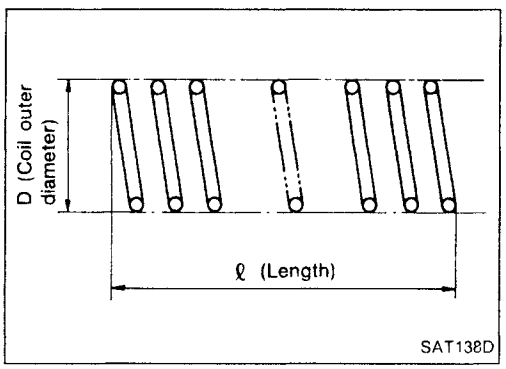

SAT138D

INSPECTION

Valve springs

- Check each valve spring for damage or deformation. Also measure free length and outer diameter.
  Inspection standard:
  Refer to SDS, AT-167.
- Replace valve springs if deformed or fatigued.

Control valves

- Check sliding surfaces of control valves, sleeves and plugs for damage.

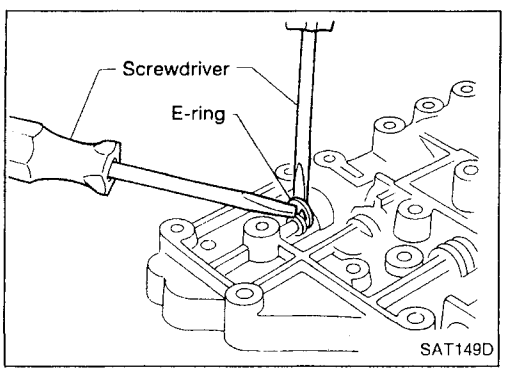

SAT149D

ASSEMBLY

Throttle valve

- Insert throttle valve to control valve body and then install E-ring to throttle valve.

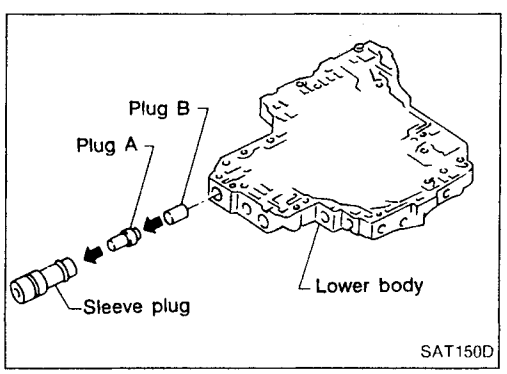

SAT150D

Pressure regulator valve

- Install pressure regulator valve after assembling sleeve plug, plug A and plug B.

AT

Simpo PDF Merge and Split Unregistered Version - http://www.simpopdf.com

Control Valve Lower Body (Cont'd)

3-4 shift valve and 2-3 shift valve

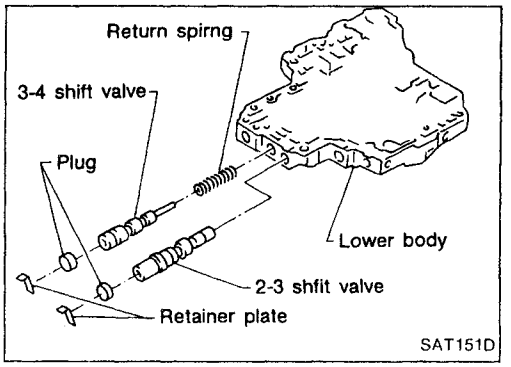

- Install 3-4 shift valve and 2-3 shift valve after fixing plugs to retainer plates on the opposite side.

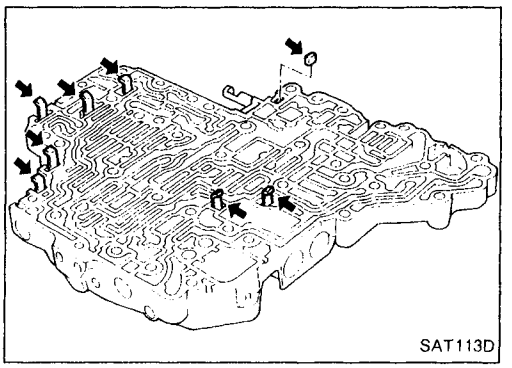

- Install control valves.
  For installation procedures, refer to "ASSEMBLY in "Control Valve Upper Body", AT-87.

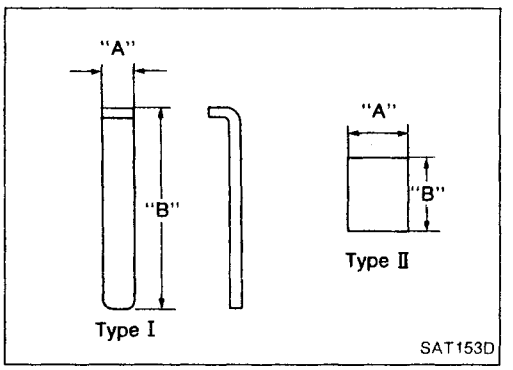

Retainer plate:

Unit: mm (in)

Name of control valve	Length A	Length B	Type
Throttle valve & detent valve	6.0 (0.236)	7.2 (0.283)	II
Pressure regulator valve	6.0 (0.236)	28.0 (1.102)	I
3-4 shift valve			
2-3 shift valve			
1-2 shift valve			
Overrun clutch control valve			

- Install proper retainer plates.

Simpo PDF Merge and Split Unregistered Version - http://www.simpopdf.com

Reverse Clutch

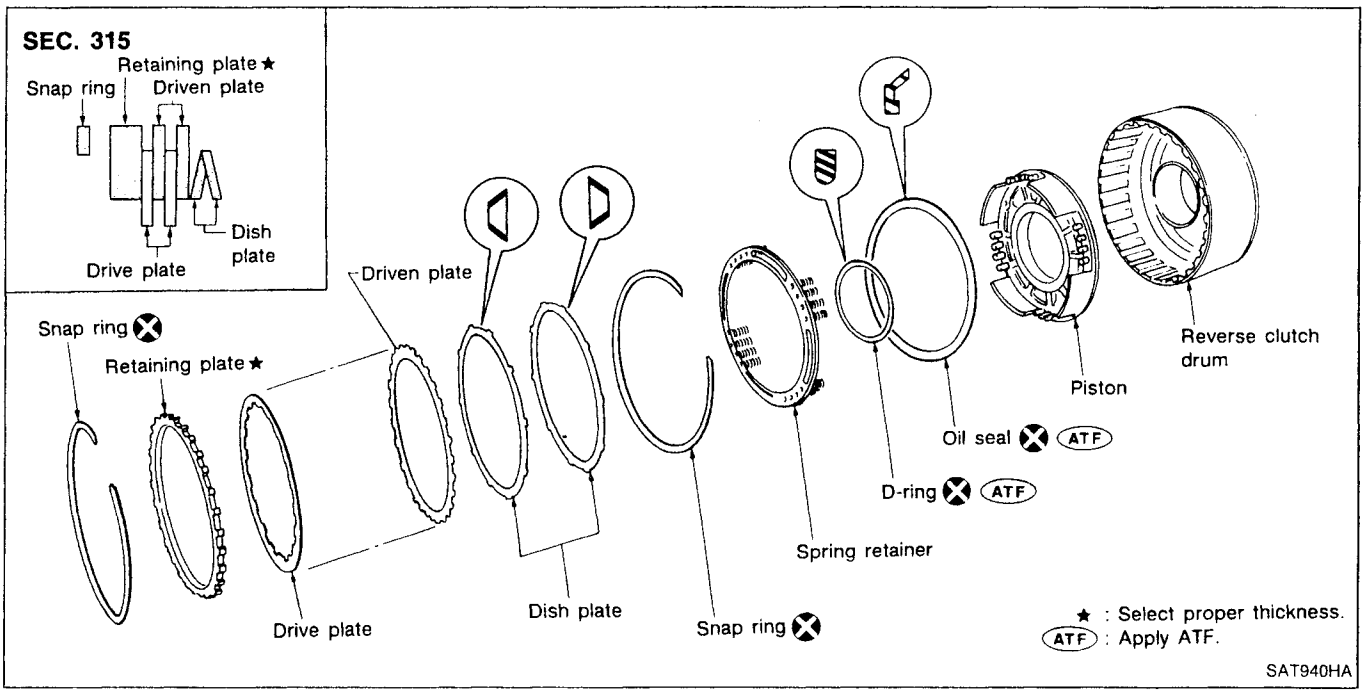

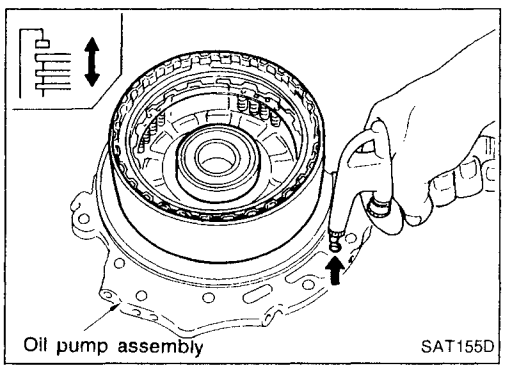

DISASSEMBLY

1. Check operation of reverse clutch.

a. Install seal ring onto drum support of oil pump cover and install reverse clutch assembly. Apply compressed air to oil hole.

b. Check to see that retaining plate moves to snap ring.

c. If retaining plate does not contact snap ring,

- D-ring might be damaged.
- Oil seal might be damaged.
- Fluid might be leaking past piston check ball.

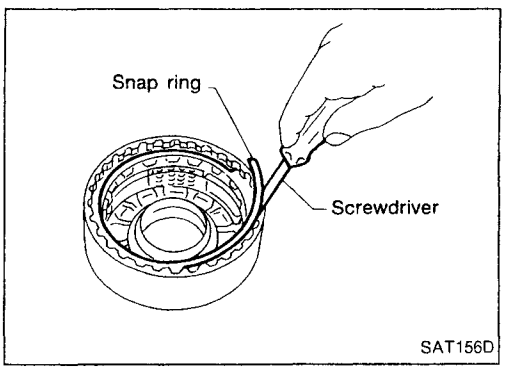

2. Remove snap ring.
3. Remove drive plates, driven plates, retaining plate, and dish plates.

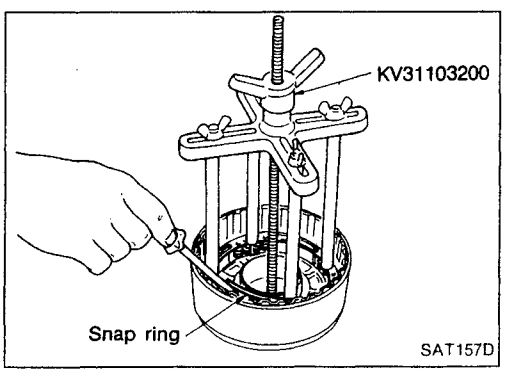

4. Set Tool on spring retainer and remove snap ring from reverse clutch drum while compressing return springs.

- **Set Tool directly above springs.**
- **Do not expand snap ring excessively.**

5. Remove spring retainer and return springs.

- **Do not remove return springs from spring retainer.**

AT

Simpo PDF Merge and Split Unregistered Version - http://www.simpopdf.com

Reverse Clutch (Cont'd)

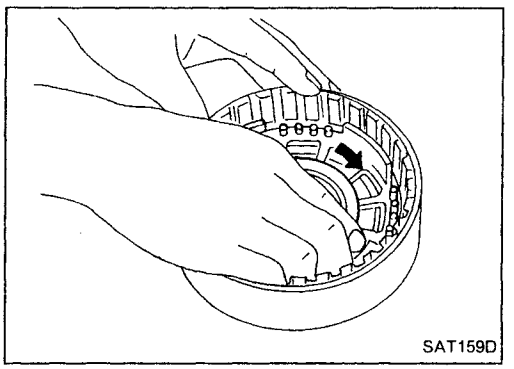
SAT159D

6. Remove piston from reverse clutch drum by turning it.

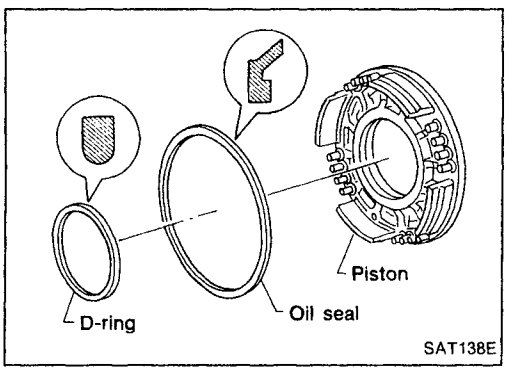

SAT138E

7. Remove D-ring and oil seal from piston.

INSPECTION

Reverse clutch snap ring, spring retainer and return springs

- Check for deformation, fatigue or damage.
- Replace if necessary.
- **When replacing spring retainer and return springs, replace them as a set.**

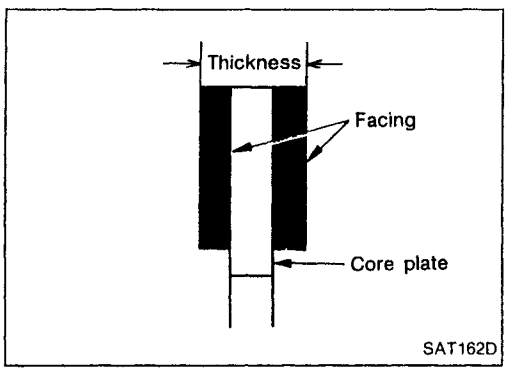

SAT162D

Reverse clutch drive plates

- Check facing for burns, cracks or damage.
- Measure thickness of facing.
  Thickness of drive plate:
  Standard value 2.0 mm (0.079 in)
  Wear limit 1.8 mm (0.071 in)
- If not within wear limit, replace.

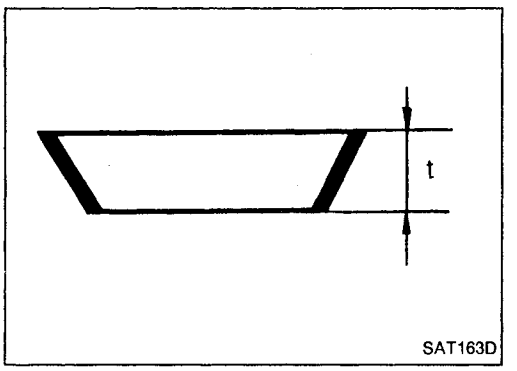

SAT163D

Reverse clutch dish plates

- Check for deformation or damage.
- Measure thickness of dish plate.
  Thickness of dish plate:
  2.89 - 3.19 mm (0.1138 - 0.1256 in)
- If deformed or fatigued, replace.

Simpo PDF Merge and Split Unregistered Version - http://www.simpopdf.com

Reverse Clutch (Cont'd)

Reverse clutch piston

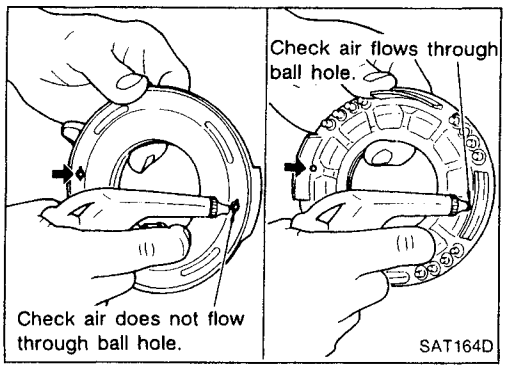

- Make sure check balls are not fixed.
- Apply compressed air to check ball oil hole opposite the return spring. Make sure there is no air leakage.
- Apply compressed air to oil hole on return spring side to make sure air leaks past ball.

ASSEMBLY

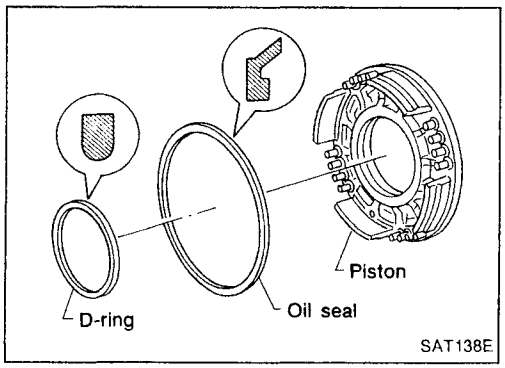

1. Install D-ring and oil seal on piston.

- **Take care with the direction of the oil seal.**
- **Apply ATF to both parts.**

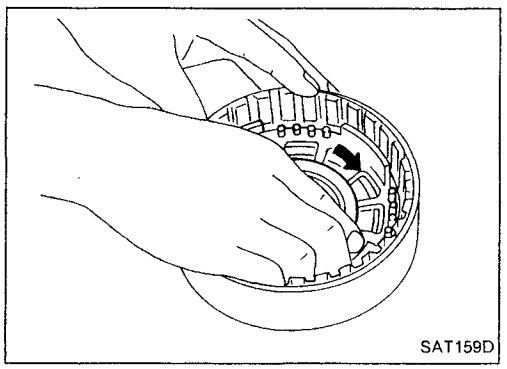

2. Install piston assembly by turning it slowly.

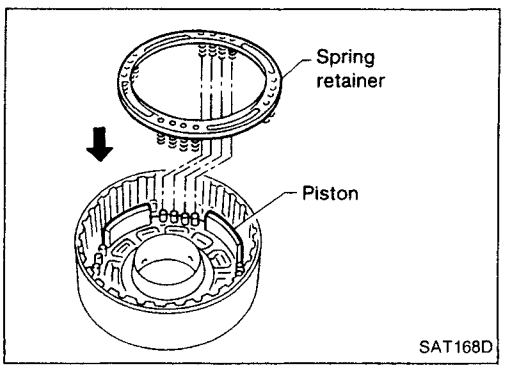

3. Install return springs and spring retainer on piston.

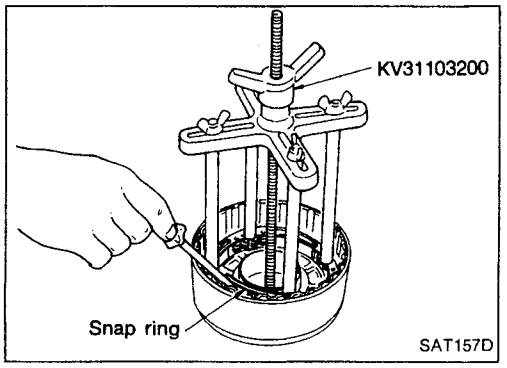

4. Set Tool on spring retainer and install snap ring while compressing return springs.

- **Set Tool directly above return springs.**

AT

Simpo PDF Merge and Split Unregistered Version - http://www.simpopdf.com

Reverse Clutch (Cont'd)

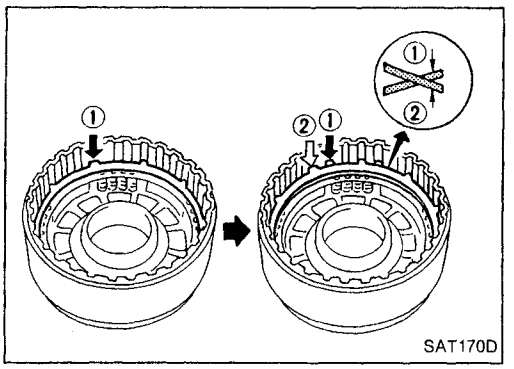

5. Install drive plates, driven plates, retaining plate and dish plates.
- **Do not align the projections of any two dish plates.**

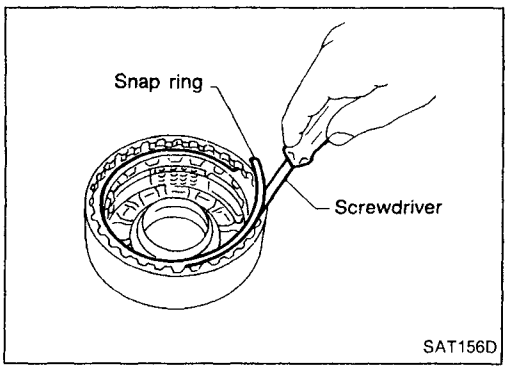

6. Install snap ring.

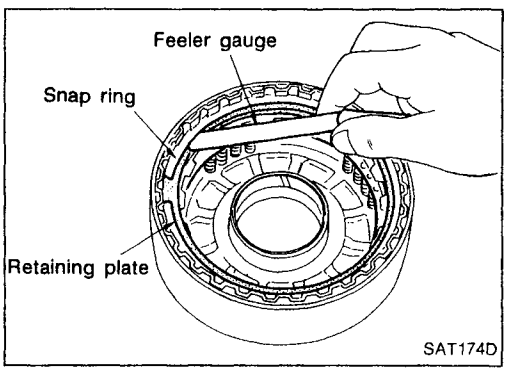

7. Measure clearance between retaining plate and snap ring. If not within allowable limit, select proper retaining plate.
   Specified clearance:
   Standard 0.5 - 0.8 mm (0.020 - 0.031 in)
   Allowable limit 1.2 mm (0.047 in)
   Retaining plate:
   Refer to SDS, AT-168.

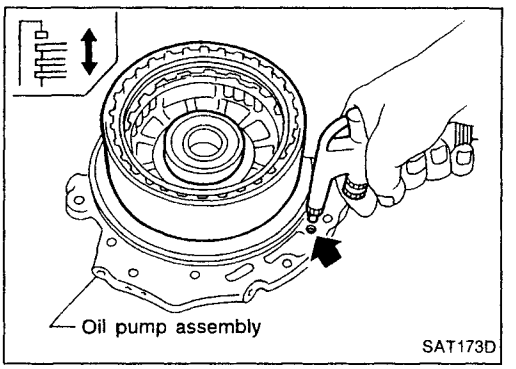

8. Check operation of reverse clutch.
   Refer to "DISASSEMBLY" in "Reverse Clutch", AT-93.

Simpo PDF Merge and Split Unregistered Version - http://www.simpopdf.com

High Clutch

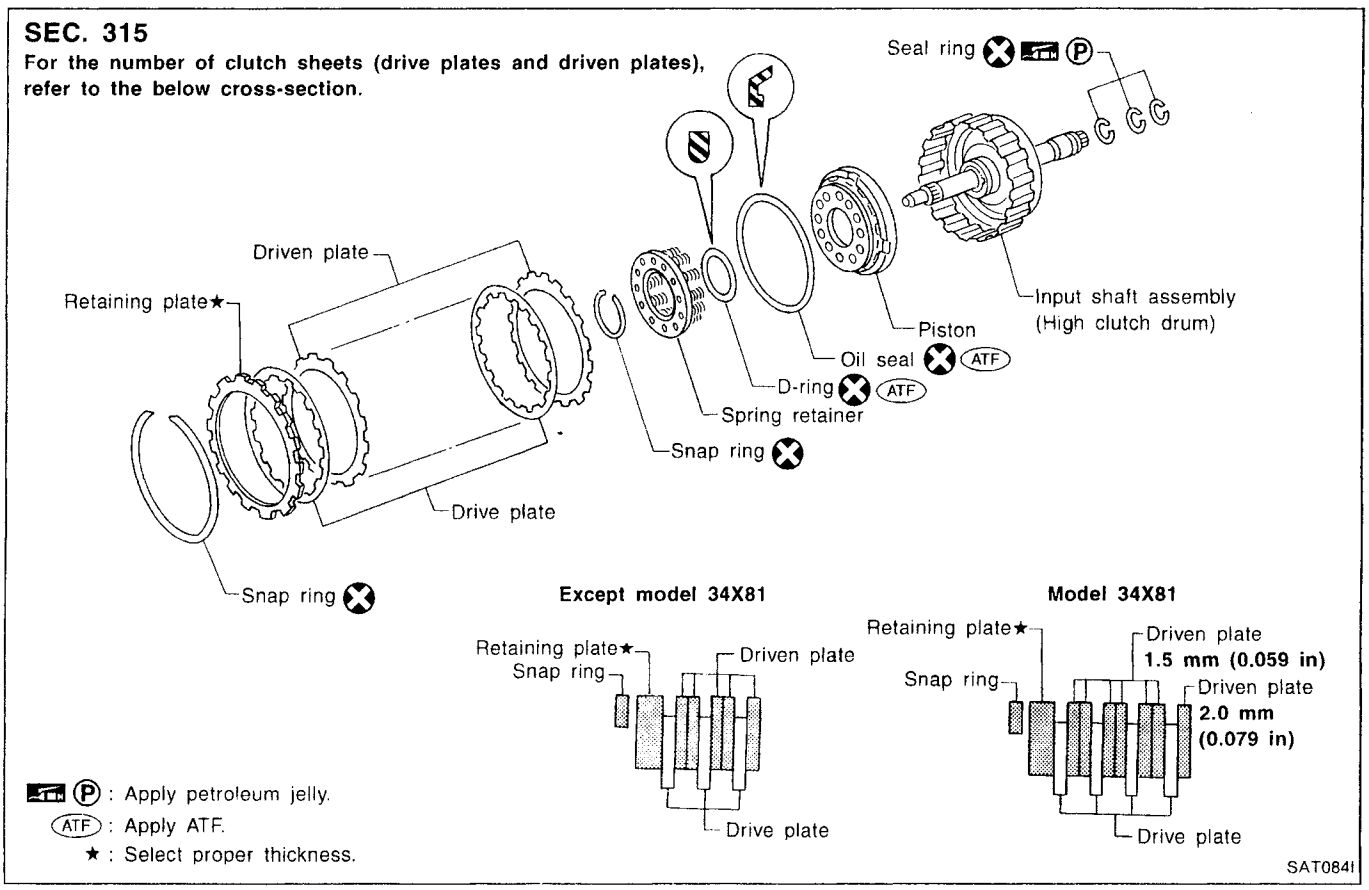

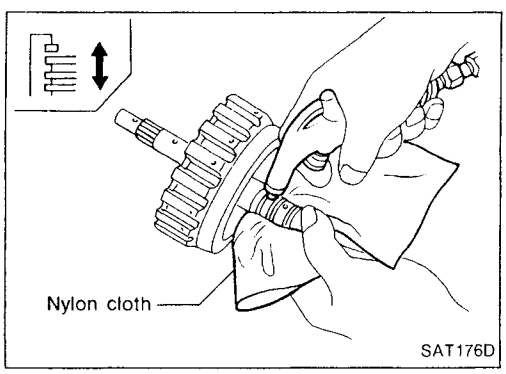

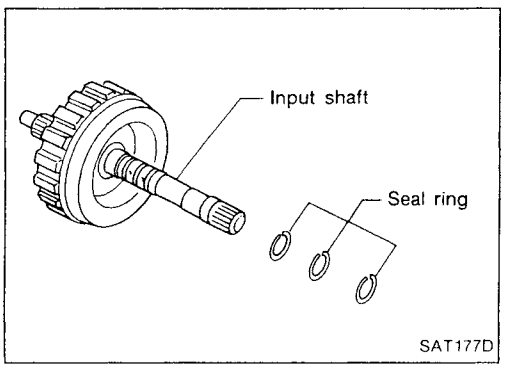

DISASSEMBLY

1. Check operation of high clutch.
a. Apply compressed air to oil hole of input shaft.
- **Stop up a hole on opposite side of input shaft.**

b. Check to see that retaining plate moves to snap ring.
c. If retaining plate does not contact snap ring,
- D-ring might be damaged.
- Oil seal might be damaged.
- Fluid might be leaking past piston check ball.

2. Remove seal rings from input shaft.

AT

Simpo PDF Merge and Split Unregistered Version - http://www.simpopdf.com

High Clutch (Cont'd)

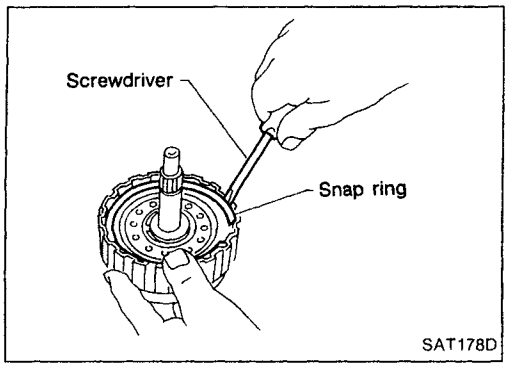

3. Remove snap ring.
4. Remove drive plates, driven plates and retaining plate.

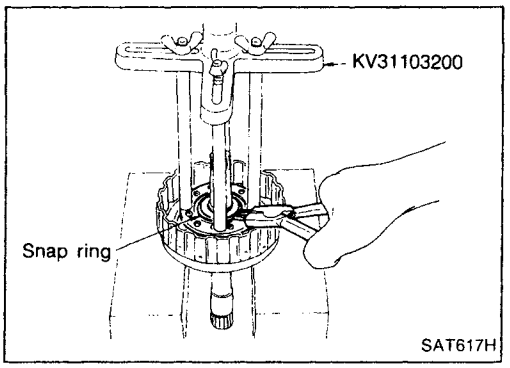

5. Set Tool on spring retainer and remove snap ring from high clutch drum while compressing return springs.
- **Set Tool directly above springs.**
- **Do not expand snap ring excessively.**

6. Remove spring retainer and return springs.
- **Do not remove return springs from spring retainer.**

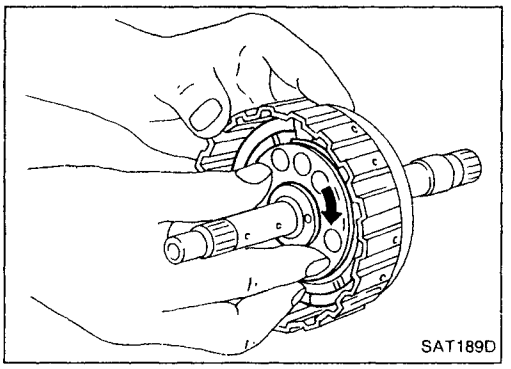

7. Remove piston from high clutch drum by turning it.

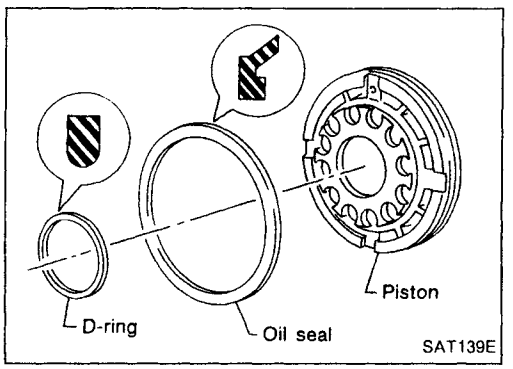

8. Remove D-ring and oil seal from piston.

INSPECTION

Reverse clutch snap ring, spring retainer and return springs

- Check for deformation, fatigue or damage.
- Replace if necessary.
- **When replacing spring retainer and return springs, replace them as a set.**

Simpo PDF Merge and Split Unregistered Version - http://www.simpopdf.com

High Clutch (Cont'd)

High clutch drive plates

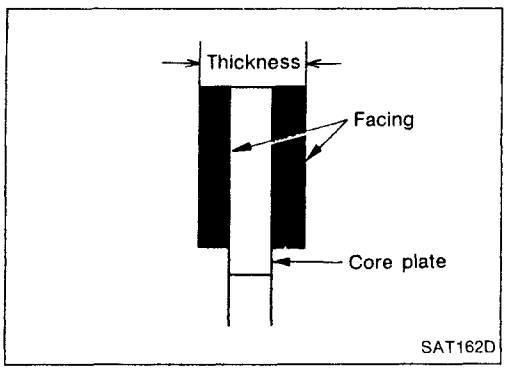

- Check facing for burns, cracks or damage.
- Measure thickness of facing.

Thickness of drive plate:
Except model 34X81
Standard value 2.0 mm (0.079 in)
Wear limit 1.8 mm (0.071 in)
Model 34X81
Standard value 1.6 mm (0.063 in)
Wear limit 1.4 mm (0.055 in)

- If not within wear limit, replace.

High clutch piston

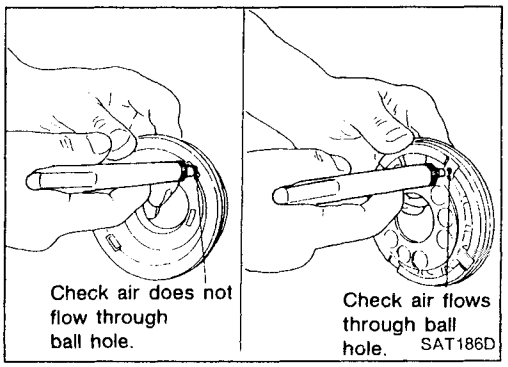

- Make sure check balls are not fixed.
- Apply compressed air to check ball oil hole opposite the return spring. Make sure there is no air leakage.
- Apply compressed air to oil hole on return spring side to make sure air leaks past ball.

Seal ring clearance

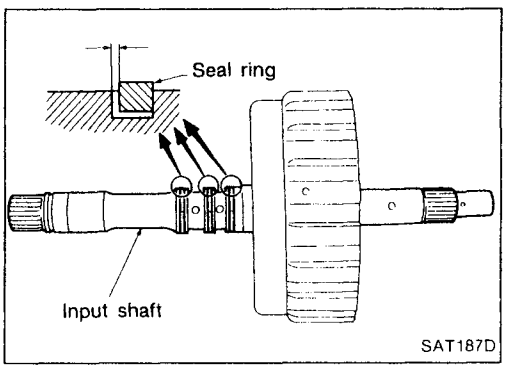

- Install new seal rings onto input shaft.
- Measure clearance between seal ring and ring groove.

Standard clearance:
0.08 - 0.23 mm (0.0031 - 0.0091 in)
Allowable limit:
0.23 mm (0.0091 in)

- If not within wear limit, replace input shaft assembly.

ASSEMBLY

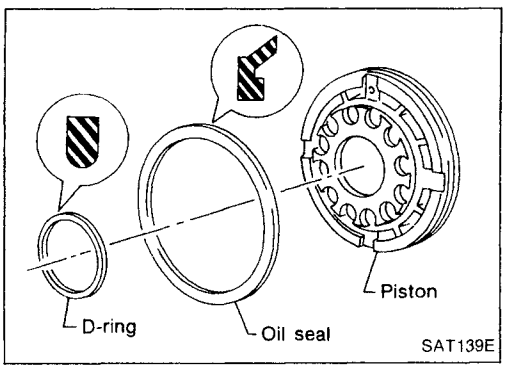

1. Install D-ring and oil seal on piston.
- **Take care with the direction of the oil seal.**
- **Apply ATF to both parts.**

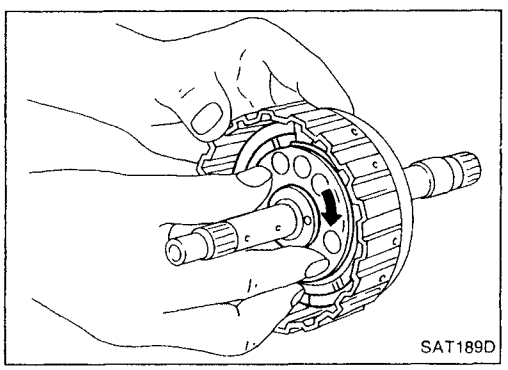

2. Install piston assembly by turning it slowly.
- **Apply ATF to inner surface of drum.**

AT

Simpo PDF Merge and Split Unregistered Version - http://www.simpopdf.com

High Clutch (Cont'd)

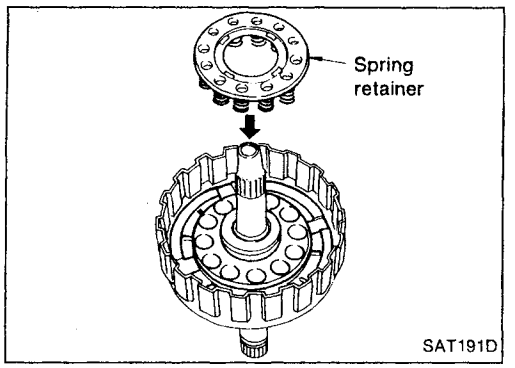

3. Install return springs and spring retainer on piston.

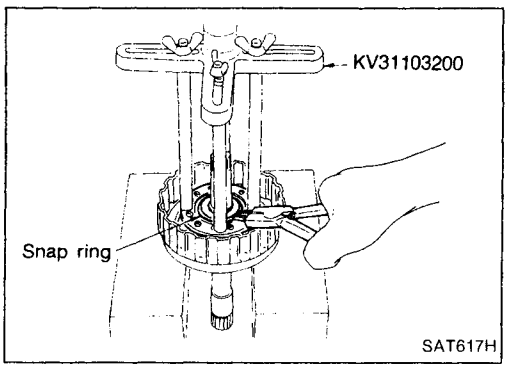

4. Set Tool on spring retainer and install snap ring while compressing return springs.
- **Set Tool directly above return springs.**

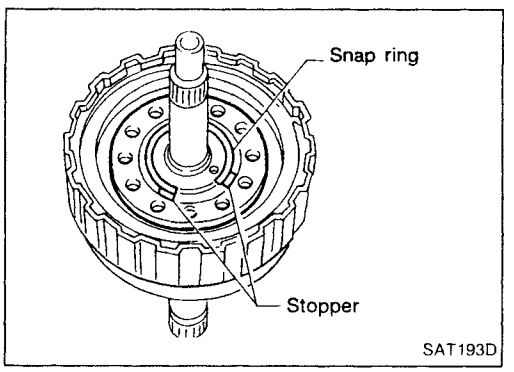

- **Do not align snap ring gap with spring retainer stopper.**

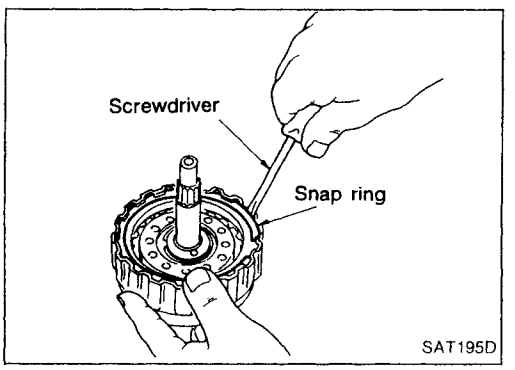

5. Install drive plates, driven plates and retaining plate.
- **Take care with the order and direction of plates.**

6. Install snap ring.

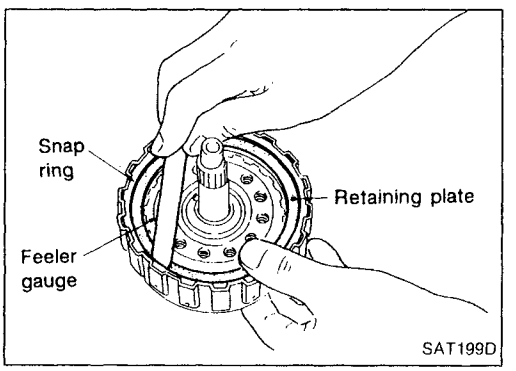

7. Measure clearance between retaining plate and snap ring. If not within allowable limit, select proper retaining plate.

Specified clearance:

Standard 1.4 - 1.8 mm (0.055 - 0.071 in)

Allowable limit (Except model 34X81) 2.4 mm (0.094 in)

Allowable limit (Model 34X81) 2.6 mm (0.102 in)

Retaining plate:

Refer to SDS, AT-168.

Simpo PDF Merge and Split Unregistered Version - http://www.simpopdf.com

High Clutch (Cont'd)

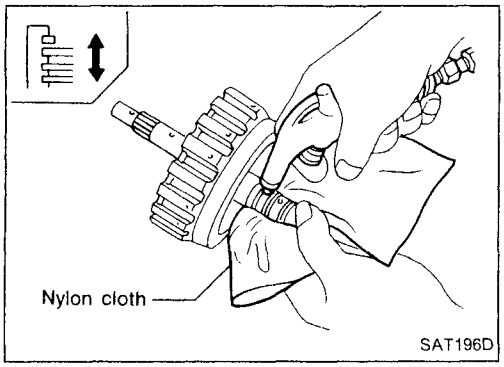

8. Check operation of high clutch.
   Refer to "DISASSEMBLY" in "High Clutch", AT-97.

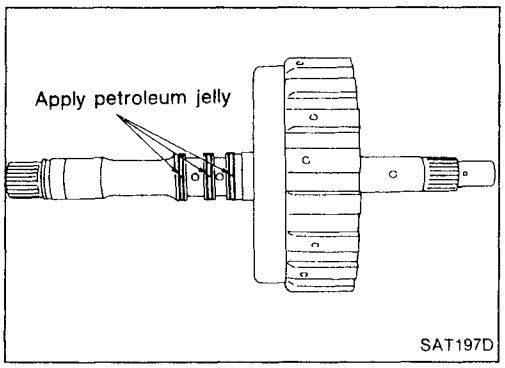

9. Install seal rings to input shaft.
- **Apply petroleum jelly to seal rings.**

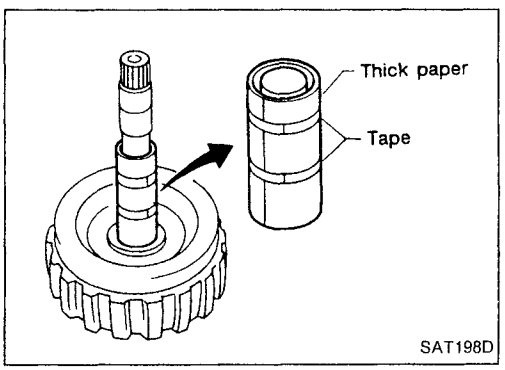

- **Roll paper around seal rings to prevent seal rings from spreading.**

AT

Simpo PDF Merge and Split Unregistered Version - http://www.simpopdf.com

Forward Clutch and Overrun Clutch

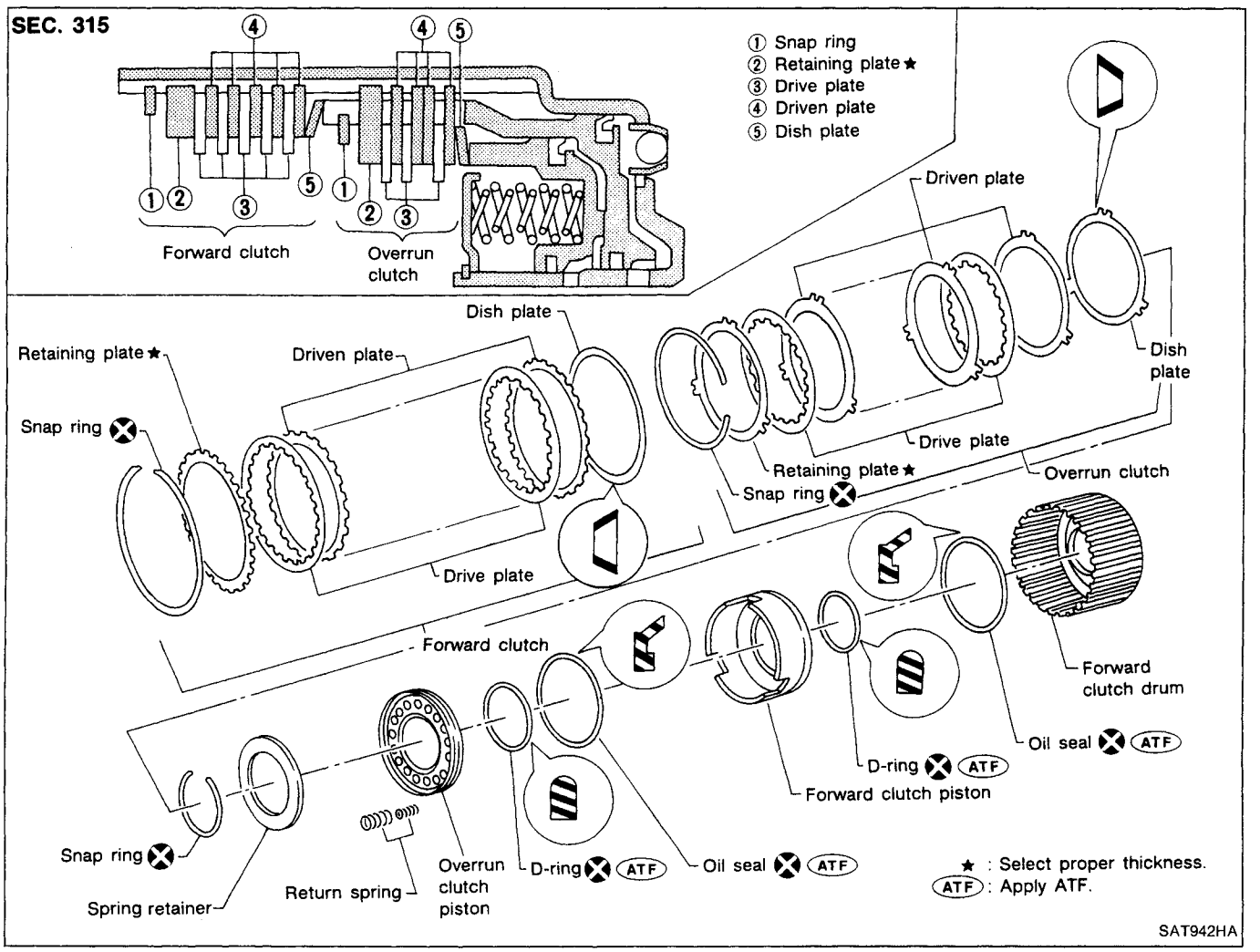

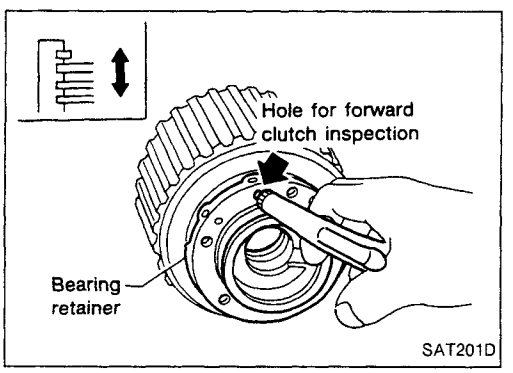

DISASSEMBLY

1. Check operation of forward clutch and overrun clutch.

a. Install bearing retainer on forward clutch drum.

b. Apply compressed air to oil hole of forward clutch drum.

c. Check to see that retaining plate moves to snap ring.

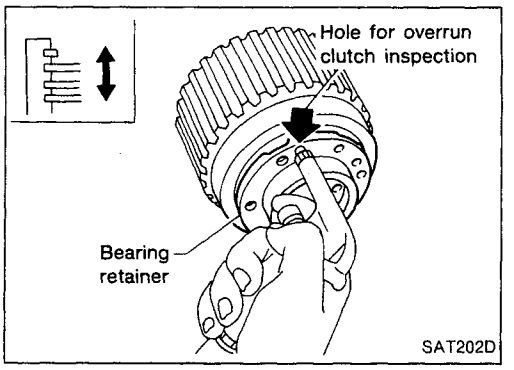

d. If retaining plate does not contact snap ring,

- D-ring might be damaged.
- Oil seal might be damaged.
- Fluid might be leaking past piston check ball.

Simpo PDF Merge and Split Unregistered Version - http://www.simpopdf.com

Forward Clutch and Overrun Clutch (Cont'd)

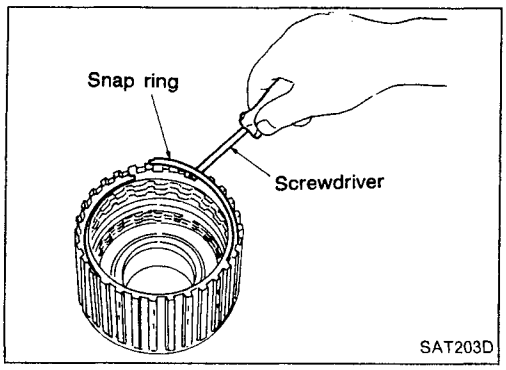

2. Remove snap ring for forward clutch.
3. Remove drive plates, driven plates, retaining plate and dish plate for forward clutch.

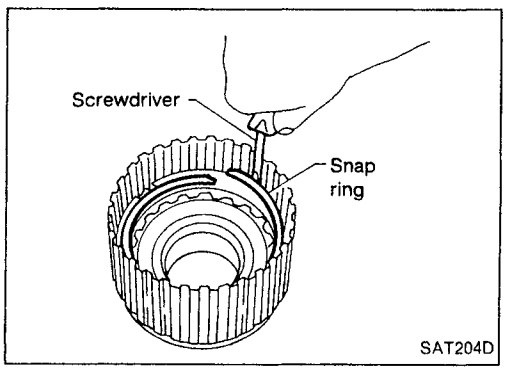

4. Remove snap ring for overrun clutch.
5. Remove drive plates, driven plates, retaining plate and dish plate for overrun clutch.

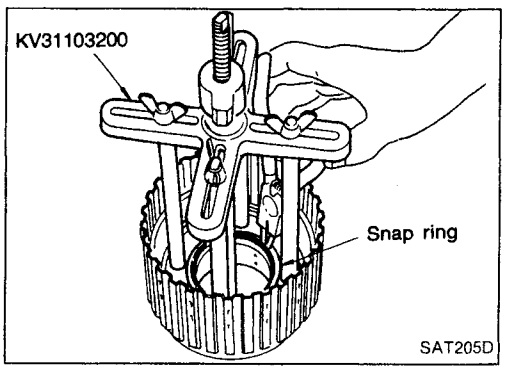

6. Set Tool on spring retainer and remove snap ring from forward clutch drum while compressing return springs.
- **Set Tool directly above return springs.**
- **Do not expand snap ring excessively.**

7. Remove spring retainer and return springs.

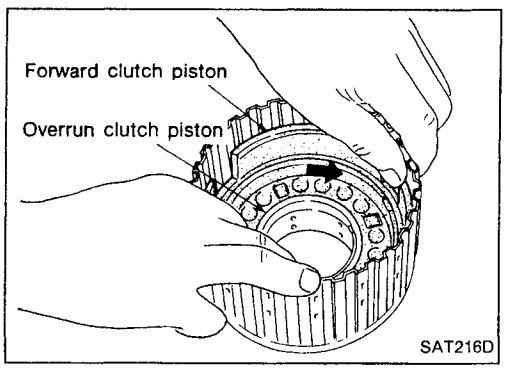

8. Remove forward clutch piston with overrun clutch piston from forward clutch drum by turning it.

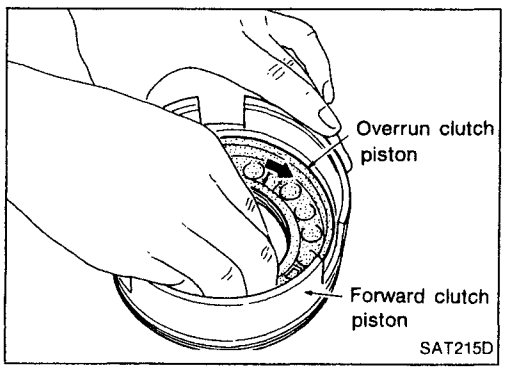

9. Remove overrun clutch piston from forward clutch piston by turning it.

AT

Simpo PDF Merge and Split Unregistered Version - http://www.simpopdf.com

Forward Clutch and Overrun Clutch (Cont'd)

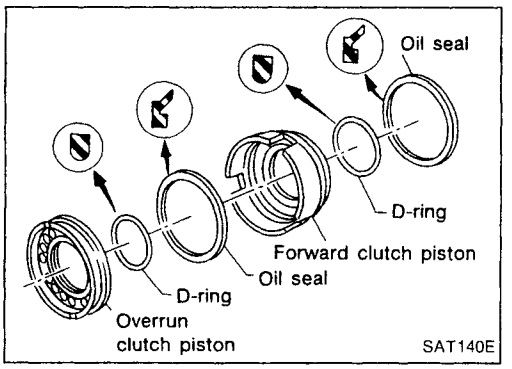

10. Remove D-rings and oil seals from forward clutch piston and overrun clutch piston.

INSPECTION

Snap rings and spring retainer

- Check for deformation, fatigue or damage.

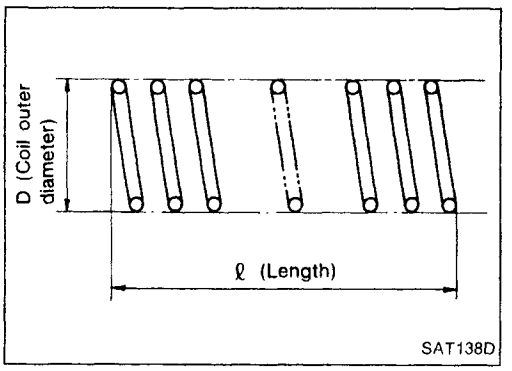

Forward clutch and overrun clutch return springs

- Check for deformation or damage.
- Measure free length and outer diameter.
  Inspection standard:
  Refer to SDS, AT-169.
- Replace if deformed or fatigued.

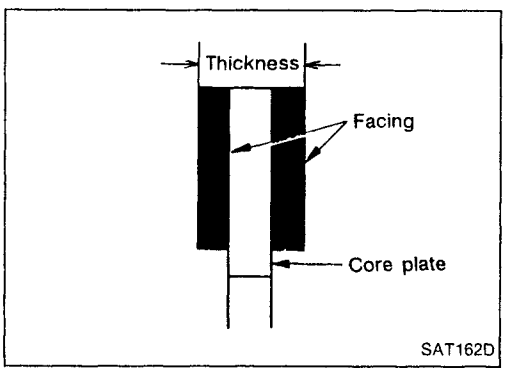

Forward clutch and overrun clutch drive plates

- Check facing for burns, cracks or damage.
- Measure thickness of facing.
  Thickness of drive plate:
  Forward clutch
  Standard value 1.8 mm (0.071 in)
  Wear limit 1.6 mm (0.063 in)
  Overrun clutch
  Standard value 1.6 mm (0.063 in)
  Wear limit 1.4 mm (0.055 in)
- If not within wear limit, replace.

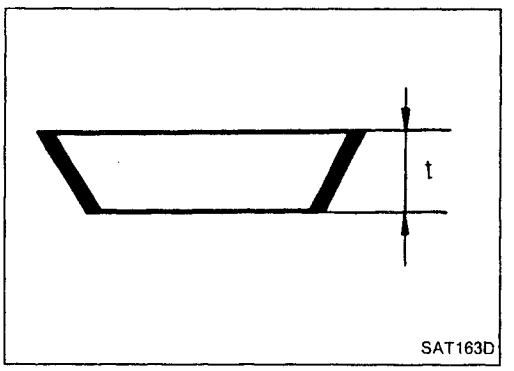

Forward clutch and overrun clutch dish plates

- Check for deformation or damage.
- Measure thickness of dish plate.
  Thickness of dish plate:
  Forward clutch 2.35 - 2.65 mm (0.0925 - 0.1043 in)
  Overrun clutch 2.00 - 2.30 mm (0.0787 - 0.0906 in)
- If deformed or fatigued, replace.

Simpo PDF Merge and Split Unregistered Version - http://www.simpopdf.com

Forward Clutch and Overrun Clutch (Cont'd)

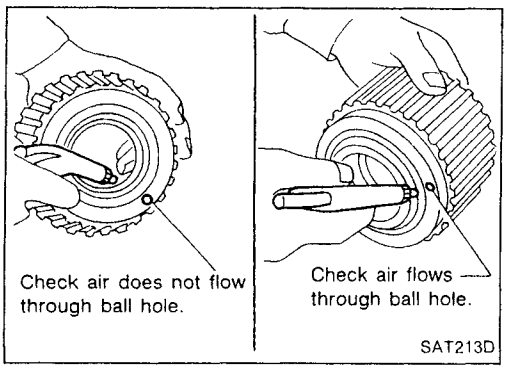

Forward clutch drum

- Make sure check balls are not fixed.
- Apply compressed air to check ball oil hole from outside of forward clutch drum. Make sure air leaks past ball.
- Apply compressed air to oil hole from inside of forward clutch drum. Make sure there is no air leakage.

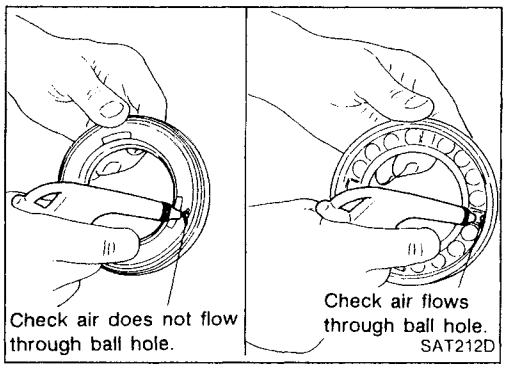

Overrun clutch piston

- Make sure check balls are not fixed.
- Apply compressed air to check ball oil hole opposite the return spring. Make sure there is no air leakage.
- Apply compressed air to oil hole on return spring side. Make sure air leaks past ball.

AT

ASSEMBLY

1. Install D-rings and oil seals on forward clutch piston and overrun clutch piston.

- **Take care with direction of oil seal.**
- **Apply ATF to both parts.**

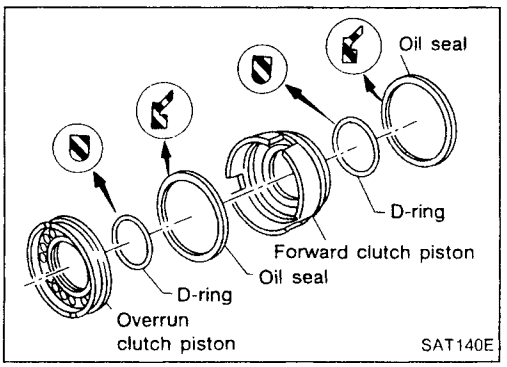

2. Install overrun clutch piston assembly on forward clutch piston while turning it slowly.

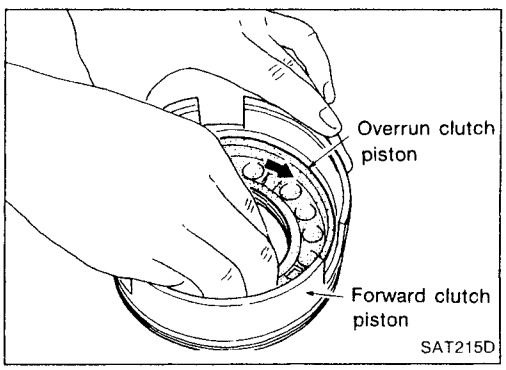

3. Install forward clutch piston assembly on forward clutch drum while turning it slowly.

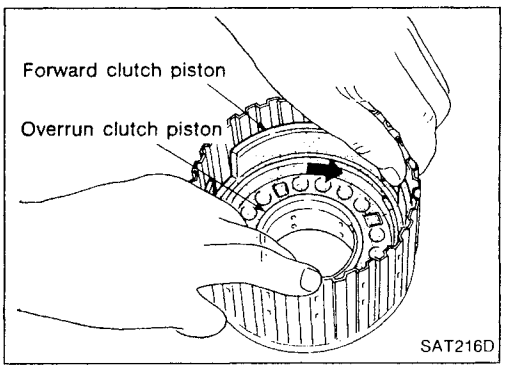

Simpo PDF Merge and Split Unregistered Version - http://www.simpopdf.com

Forward Clutch and Overrun Clutch (Cont'd)

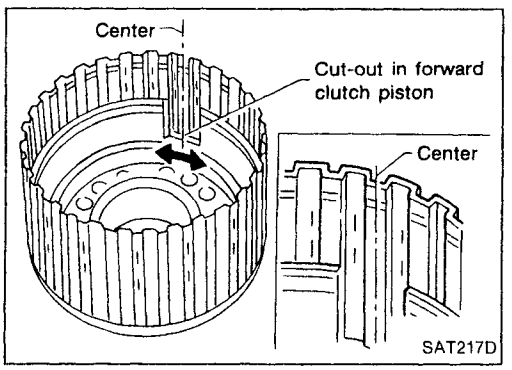

4. Align notch in forward clutch piston with groove in forward clutch drum.

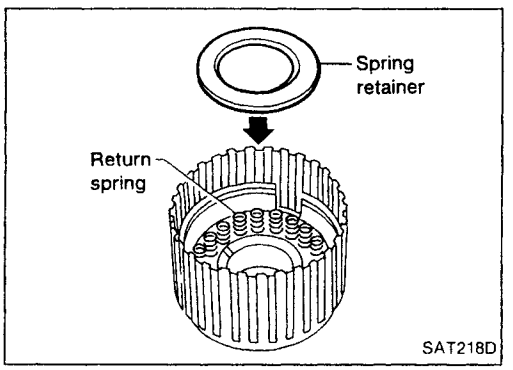

5. Install return springs on piston.
6. Install spring retainer on return springs.

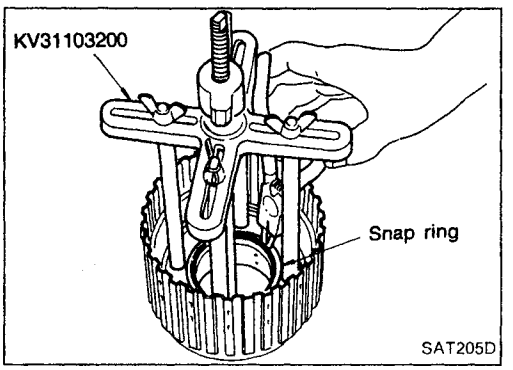

7. Set Tool on spring retainer and install snap ring while compressing return springs.

- **Set Tool directly above return springs.**

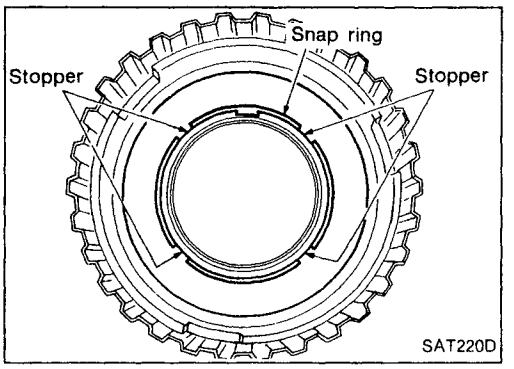

- **Do not align snap ring gap with spring retainer stopper.**

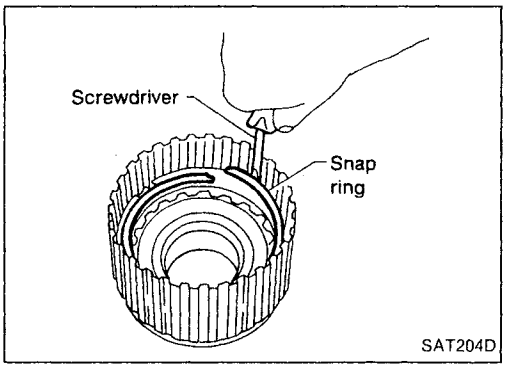

8. Install drive plates, driven plates, retaining plate and dish plate for overrun clutch.
9. Install snap ring for overrun clutch.

Simpo PDF Merge and Split Unregistered Version - http://www.simpopdf.com

Forward Clutch and Overrun Clutch (Cont'd)

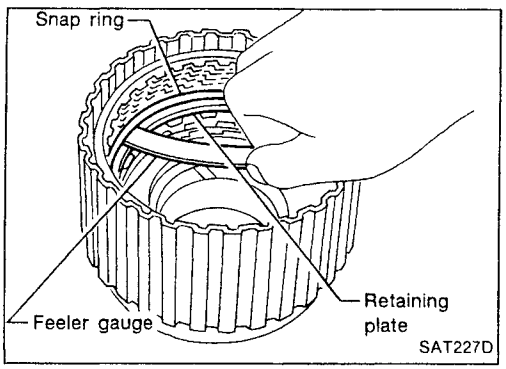

10. Measure clearance between overrun clutch retaining plate and snap ring.
    If not within allowable limit, select proper retaining plate.
    Specified clearance:
    Standard 1.0 - 1.4 mm (0.039 - 0.055 in)
    Allowable limit 2.0 mm (0.079 in)
    Overrun clutch retaining plate:
    Refer to SDS, AT-168.

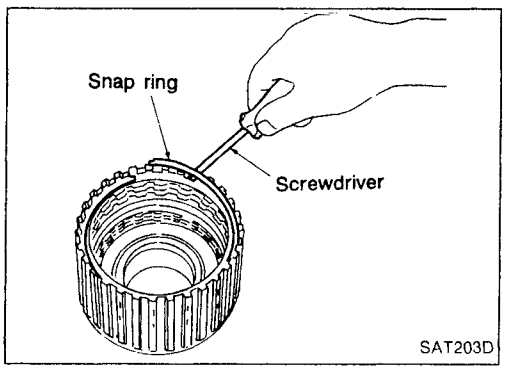

11. Install drive plates, driven plates, retaining plate and dish plate for forward clutch.
12. Install snap ring for forward clutch.

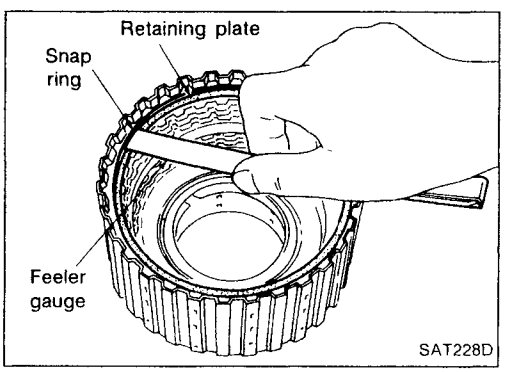

13. Measure clearance between forward clutch retaining plate and snap ring.
    If not within allowable limit, select proper retaining plate.
    Specified clearance:
    Standard 0.45 - 0.85 mm (0.0177 - 0.0335 in)
    Allowable limit 1.85 mm (0.0728 in)
    Forward clutch retaining plate:
    Refer to SDS, AT-168.

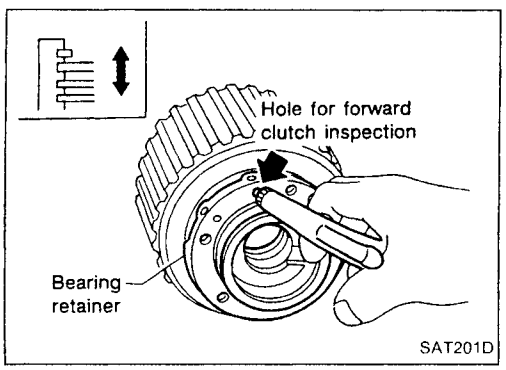

14. Check operation of forward clutch.
    Refer to "DISASSEMBLY" in "Forward Clutch and Overrun Clutch", AT-102.

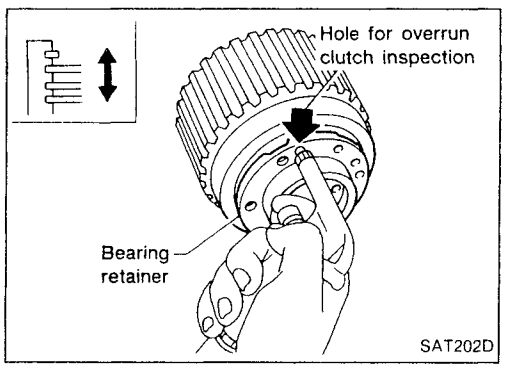

15. Check operation of overrun clutch.
    Refer to "DISASSEMBLY" in "Forward Clutch and Overrun Clutch", AT-102.

AT

Simpo PDF Merge and Split Unregistered Version - http://www.simpopdf.com

Low & Reverse Brake

SEC. 315

For the number of clutch sheets (drive plates and driven plates), refer to the below cross-section.

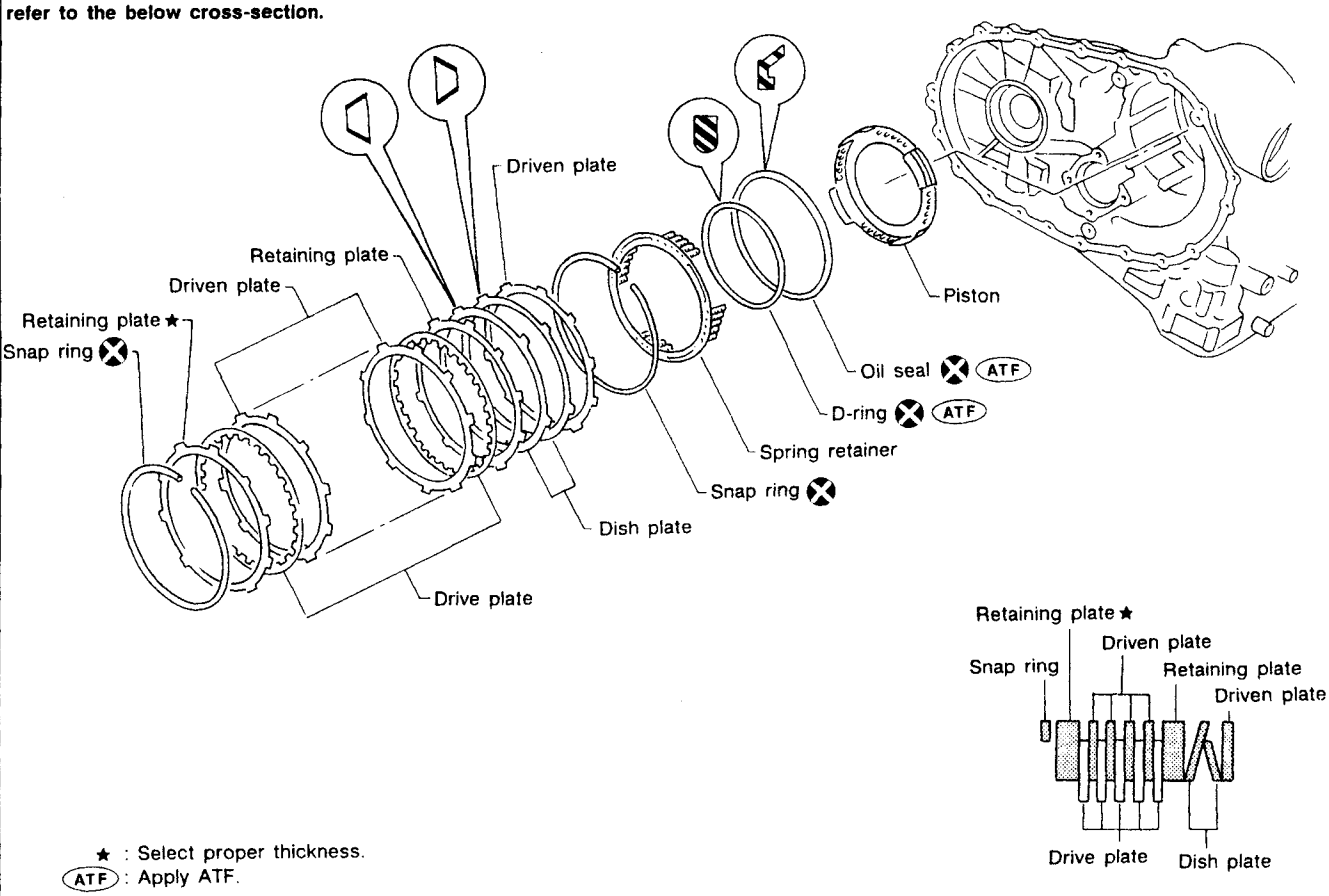

SAT943HA

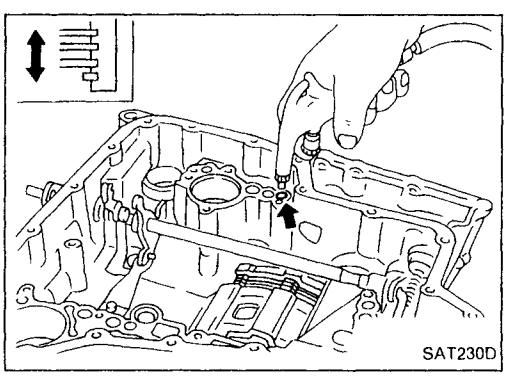

SAT230D

DISASSEMBLY

1. Check operation of low & reverse brake.

a. Apply compressed air to oil hole of transmission case.
b. Check to see that retaining plate moves to snap ring.
c. If retaining plate does not contact snap ring,

- D-ring might be damaged.
- Oil seal might be damaged.
- Fluid might be leaking past piston check ball.

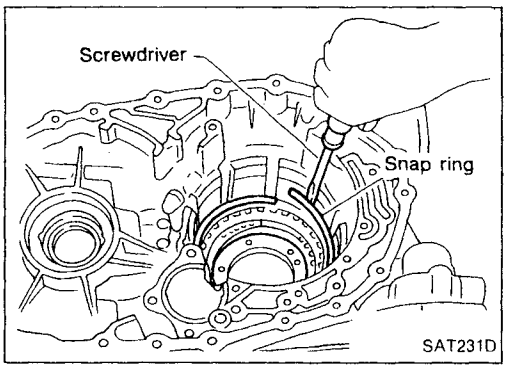

SAT231D

2. Stand transmission case.
3. Remove snap ring.
4. Remove drive plates, driven plates, retaining plates and dish plates from transmission case.

Simpo PDF Merge and Split Unregistered Version - http://www.simpopdf.com

Low & Reverse Brake (Cont'd)

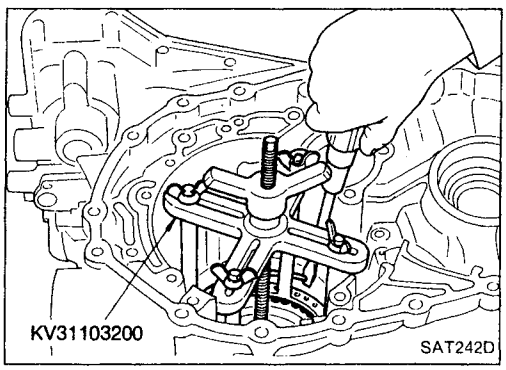

5. Set Tool on spring retainer and remove snap ring while compressing return springs.
- **Set Tool directly above return springs.**
- **Do not expand snap ring excessively.**

6. Remove spring retainer and return springs.
- **Do not remove return springs from spring retainer.**

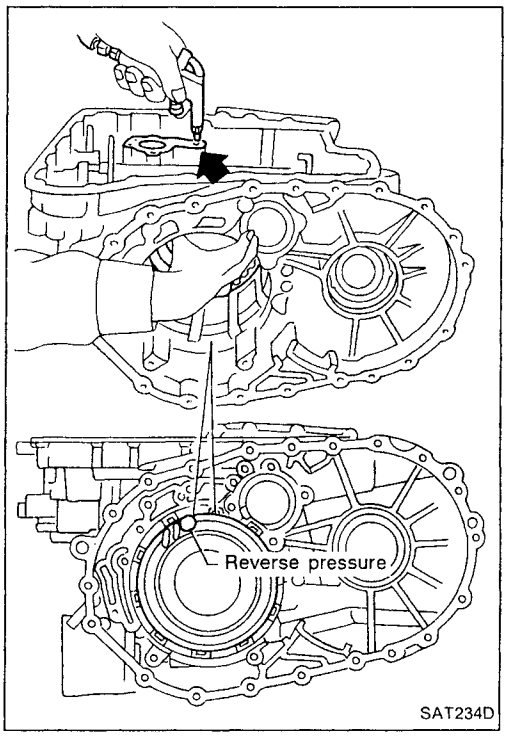

7. Apply compressed air to oil hole of transmission case while holding piston.
8. Remove piston from transmission case by turning it.

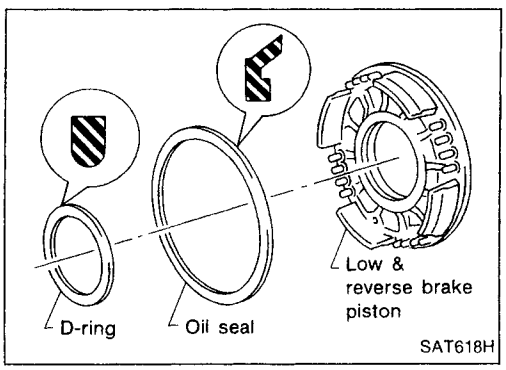

9. Remove D-ring and oil seal from piston.

INSPECTION

Low & reverse clutch snap ring, spring retainer and return springs

- Check for deformation, fatigue or damage.
- Replace if necessary.
- **When replacing spring retainer and return springs, replace them as a set.**

Simpo PDF Merge and Split Unregistered Version - http://www.simpopdf.com

Low & Reverse Brake (Cont'd)

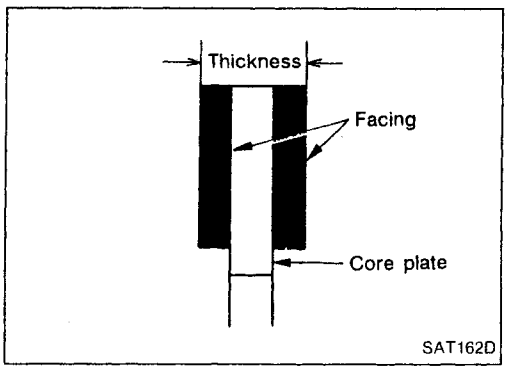

Low & reverse brake drive plate

- Check facing for burns, cracks or damage.
- Measure thickness of facing.
  Thickness of drive plate:
  Standard value 2.0 mm (0.079 in)
  Wear limit 1.8 mm (0.071 in)
- If not within wear limit, replace.

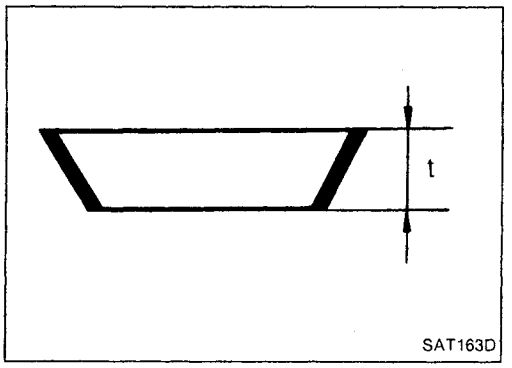

Low & reverse brake dish plates

- Check for deformation or damage.
- Measure thickness of dish plate.
  Thickness of dish plate:
  3.00 - 3.30 mm (0.1181 - 0.1299 in)
- If deformed or fatigued, replace.

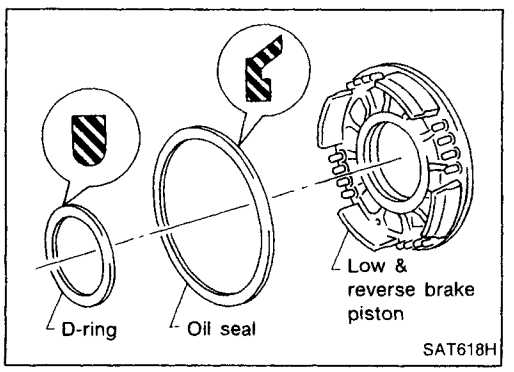

ASSEMBLY

1. Install D-ring and oil seal on piston.
- **Take care with the direction of the oil seal.**
- **Apply ATF to D-ring and oil seal.**

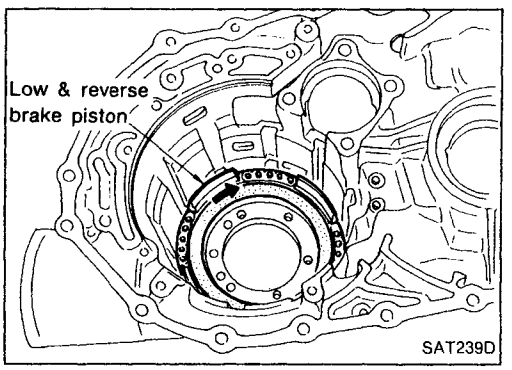

2. Stand transmission case.
3. Install piston assembly on transmission case while turning it slowly.
- **Apply ATF to inner surface of transmission case.**

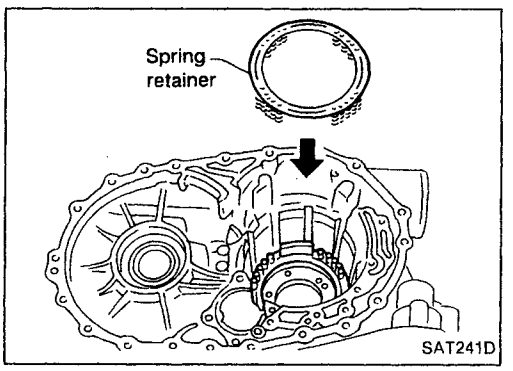

4. Install return springs and spring retainer on piston.

Simpo PDF Merge and Split Unregistered Version - http://www.simpopdf.com

Low & Reverse Brake (Cont'd)

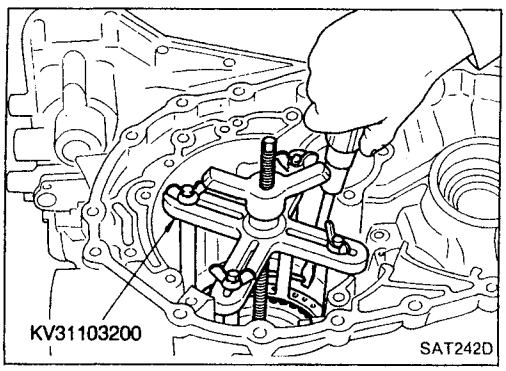

5. Install snap ring while compressing return springs.
- **Set Tool directly above return springs.**

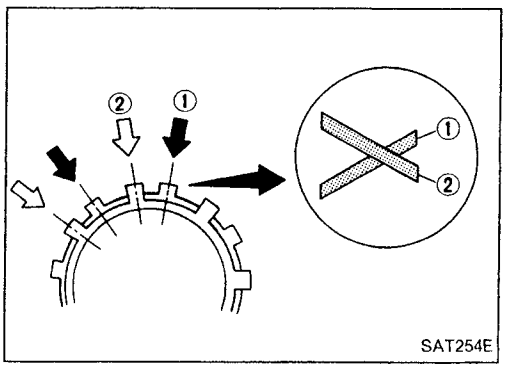

6. Install drive plates, driven plates, retaining plates and dish plates.
- **Do not align the projections on the two dish plates.**

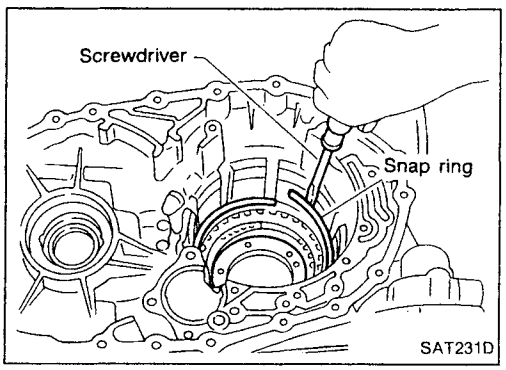

7. Install snap ring.

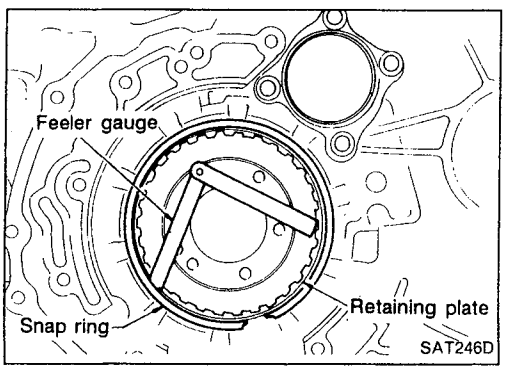

8. Measure clearance between retaining plate and snap ring. If not within allowable limit, select proper retaining plate (front side).
   Specified clearance:
   Standard 1.4 - 1.8 mm (0.055 - 0.071 in)
   Allowable limit
   2.8 mm (0.110 in)
   Retaining plate:
   Refer to SDS, AT-169.

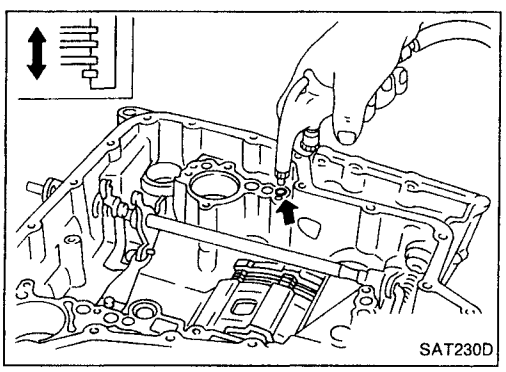

9. Check operation of low & reverse brake.
   Refer to "DISASSEMBLY" in "Low & Reverse Brake", AT-108.

AT

Simpo PDF Merge and Split Unregistered Version - http://www.simpopdf.com

Rear Internal Gear, Forward Clutch Hub and Overrun Clutch Hub

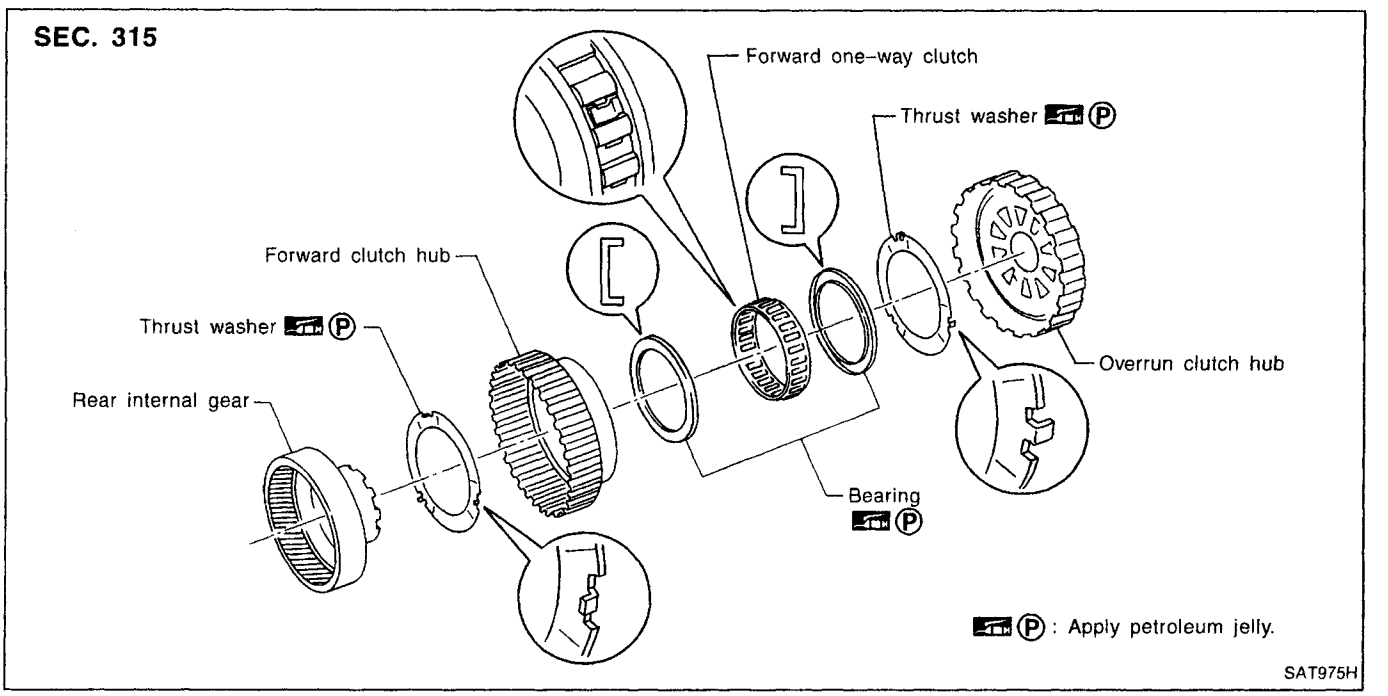

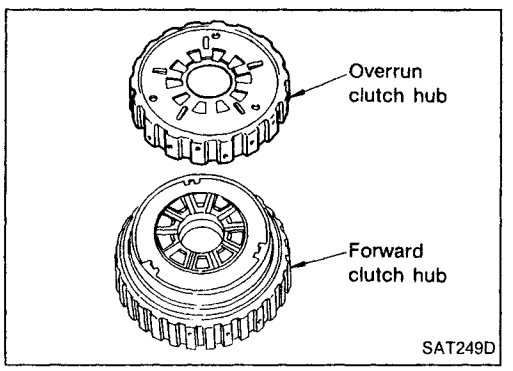

DISASSEMBLY

1. Remove snap ring from overrun clutch hub.
2. Remove overrun clutch hub from forward clutch hub.

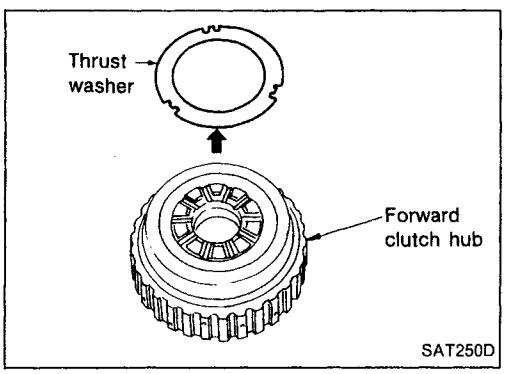

3. Remove thrust washer from forward clutch hub.

Simpo PDF Merge and Split Unregistered Version - http://www.simpopdf.com

Rear Internal Gear, Forward Clutch Hub and Overrun Clutch Hub (Cont'd)

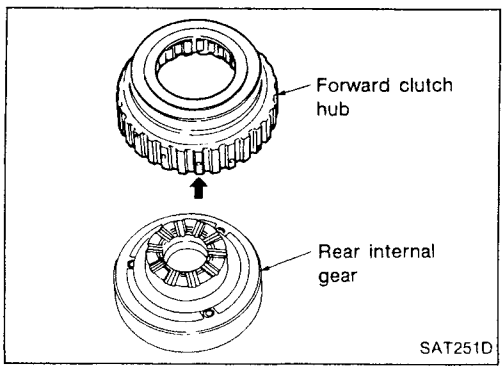

4. Remove forward clutch hub from rear internal gear.

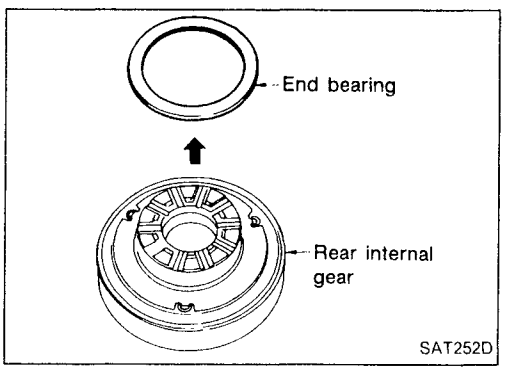

5. Remove end bearing from rear internal gear.

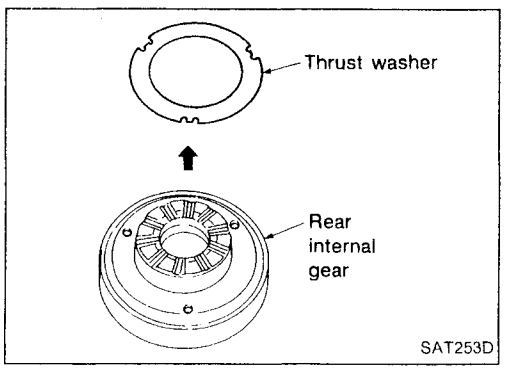

6. Remove thrust washer from rear internal gear.

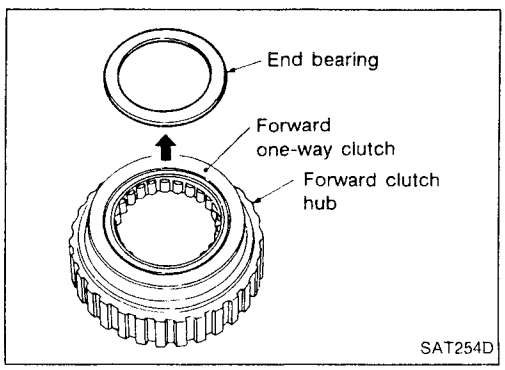

7. Remove end bearing from forward one-way clutch.

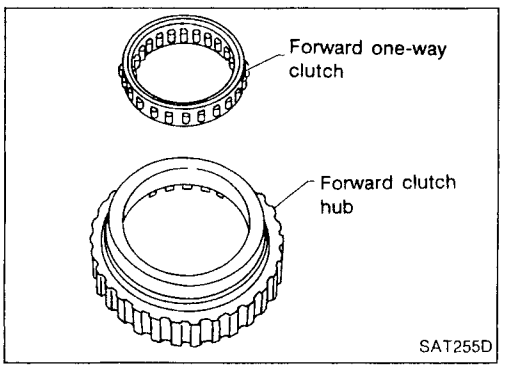

8. Remove one-way clutch from forward clutch hub.

AT

Simpo PDF Merge and Split Unregistered Version - http://www.simpopdf.com

Rear Internal Gear, Forward Clutch Hub and Overrun Clutch Hub (Cont'd)

INSPECTION

Rear internal gear, forward clutch hub and overrun clutch hub

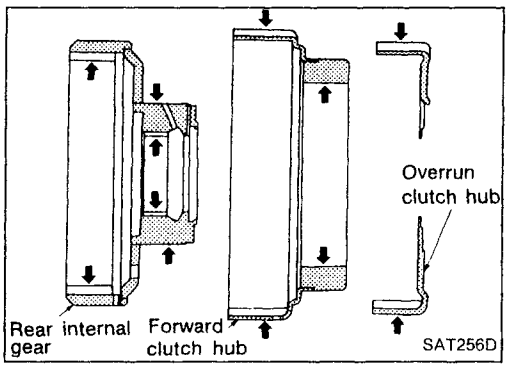

- Check rubbing surface for wear or damage.

Snap ring, end bearings and forward one-way clutch

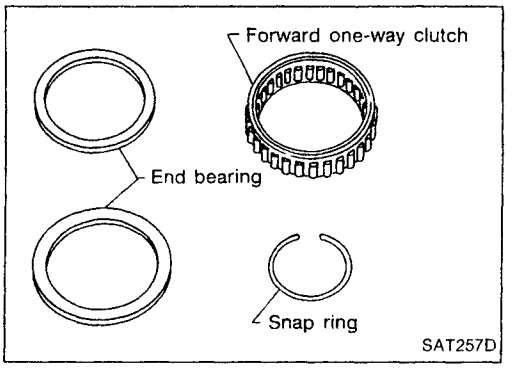

- Check snap ring and end bearings for deformation and damage.
- Check forward one-way clutch for wear and damage.

ASSEMBLY

1. Install forward one-way clutch on forward clutch.

- **Take care with the direction of the forward one-way clutch.**

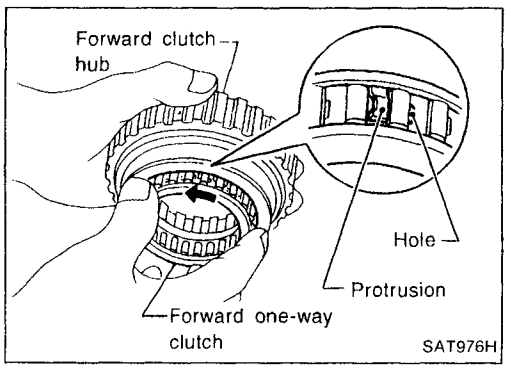

2. Install end bearing on forward one-way clutch.

- **Apply petroleum jelly to end bearing.**

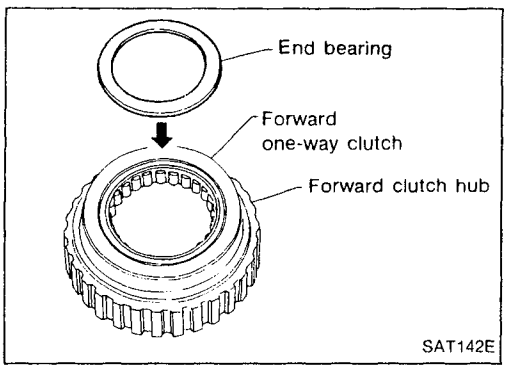

3. Install thrust washer on rear internal gear.

- **Apply petroleum jelly to thrust washer.**
- **Align pawls of thrust washer with holes of rear internal gear.**

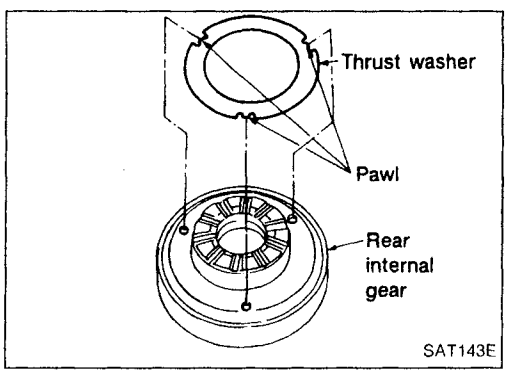

Simpo PDF Merge and Split Unregistered Version - http://www.simpopdf.com

Rear Internal Gear, Forward Clutch Hub and Overrun Clutch Hub (Cont'd)

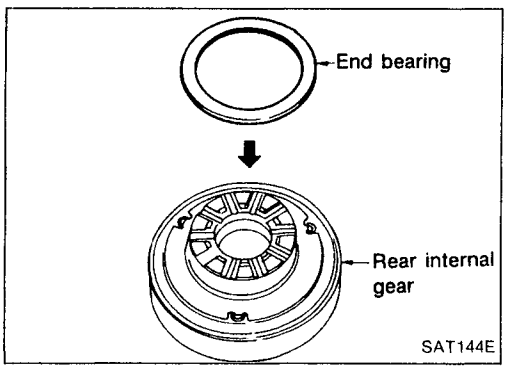

4. Install end bearing on rear internal gear.
- **Apply petroleum jelly to end bearing.**

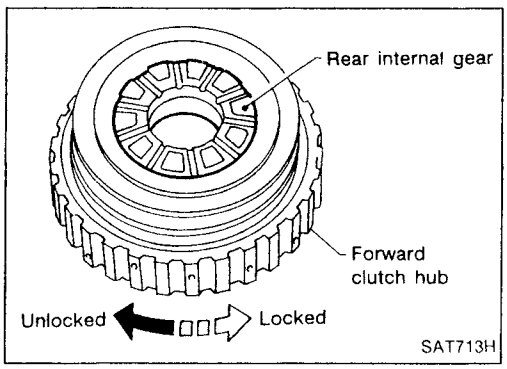

5. Install forward clutch hub on rear internal gear.
- **Check operation of forward one-way clutch.**
  Hold rear internal gear and turn forward clutch hub. Check forward clutch hub for correct locking and unlocking directions.
- **If not as shown in illustration, check installation direction of forward one-way clutch.**

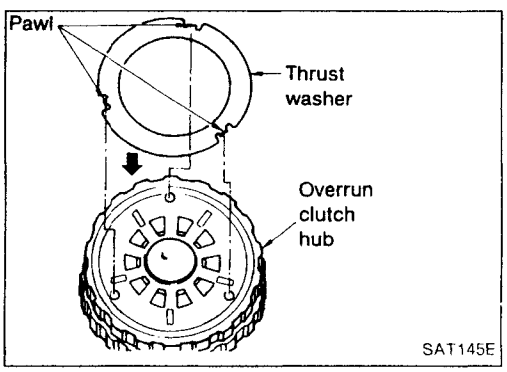

6. Install thrust washer on overrun clutch hub.
- **Apply petroleum jelly to thrust washer.**
- **Align pawls of thrust washer with holes of overrun clutch hub.**

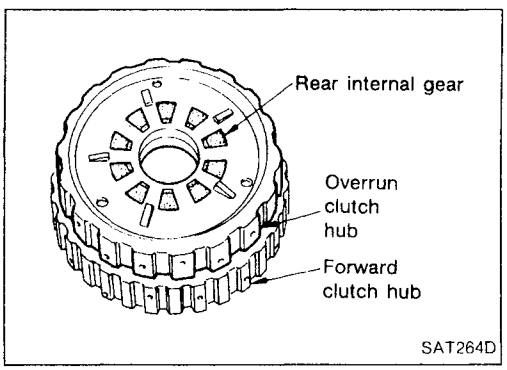

7. Install overrun clutch hub on rear internal gear.
- **Align projections of rear internal gear with holes of overrun clutch hub.**

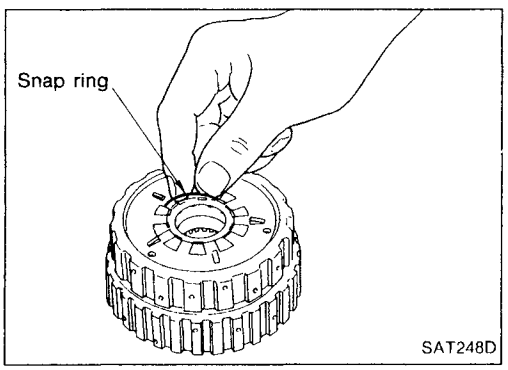

8. Install snap ring to groove of rear internal gear.

Simpo PDF Merge and Split Unregistered Version - http://www.simpopdf.com

Output Shaft, Output Gear, Idler Gear, Reduction Pinion Gear and Bearing Retainer — Except Model 34X81

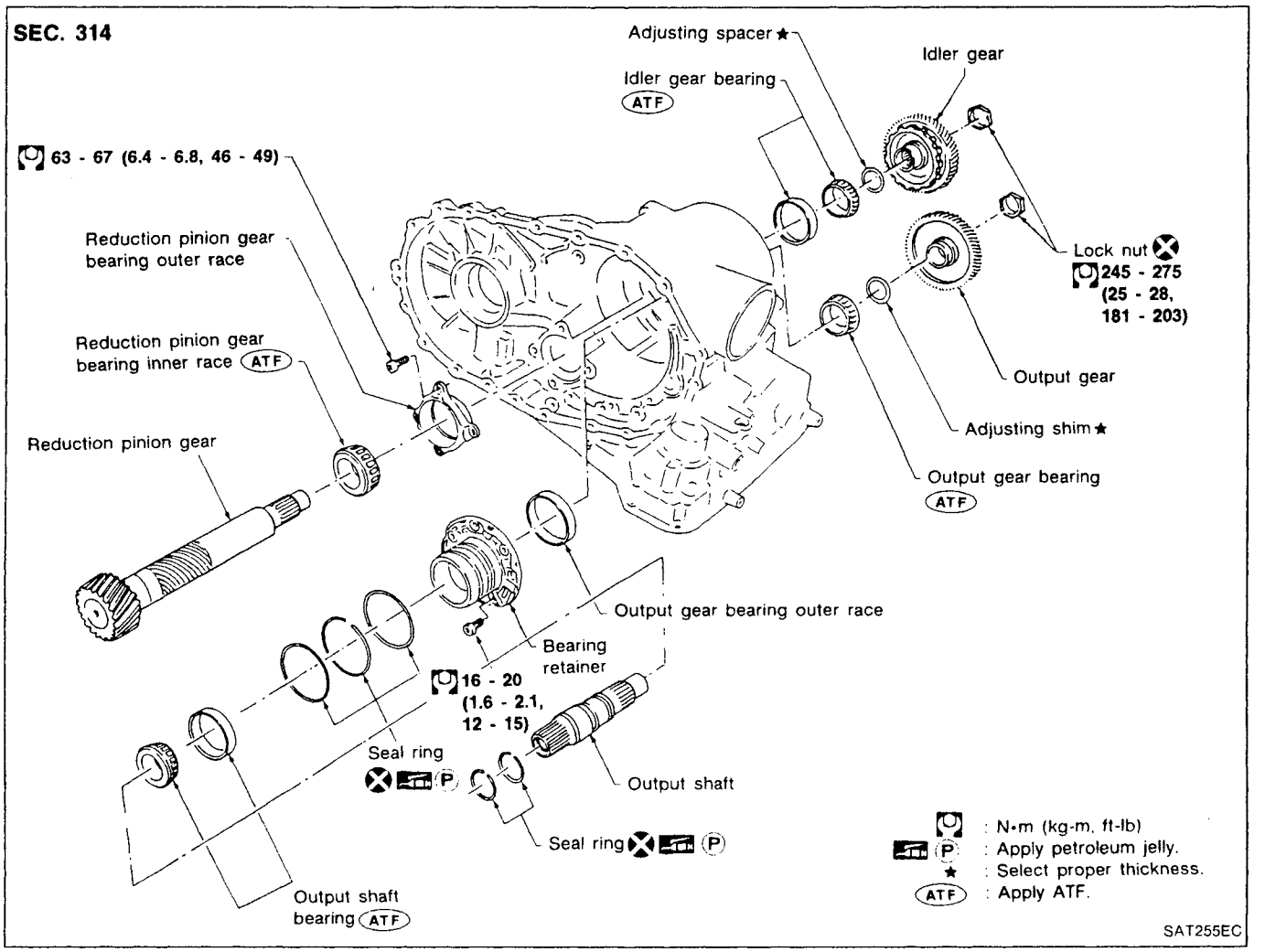

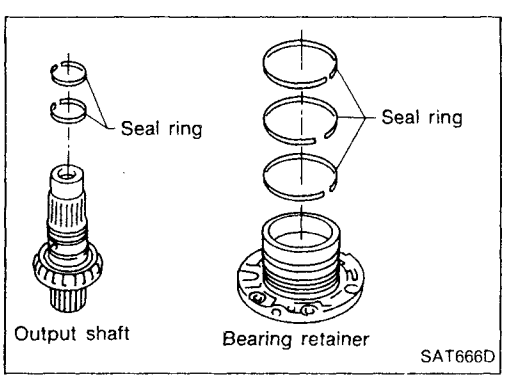

DISASSEMBLY

1. Remove seal rings from output shaft and bearing retainer.

Simpo PDF Merge and Split Unregistered Version - http://www.simpopdf.com

Output Shaft, Output Gear, Idler Gear, Reduction Pinion Gear and Bearing Retainer — Except Model 34X81 (Cont'd)

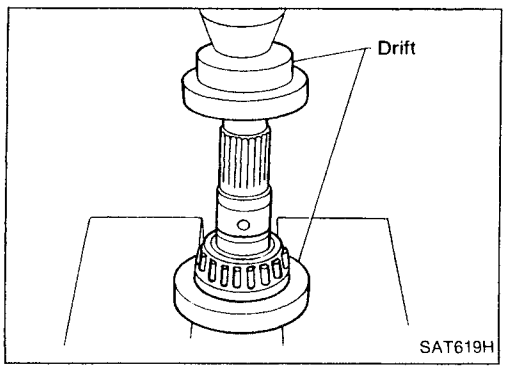

2. Press out output shaft bearing inner race.

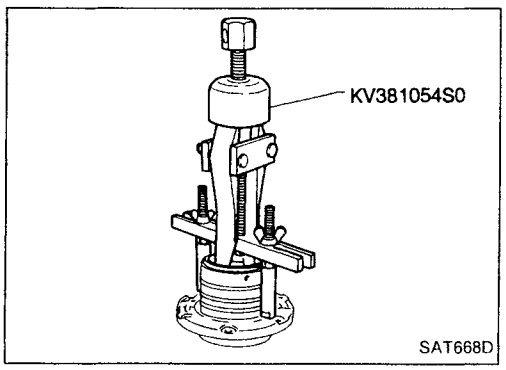

3. Remove output shaft bearing outer race from bearing retainer.

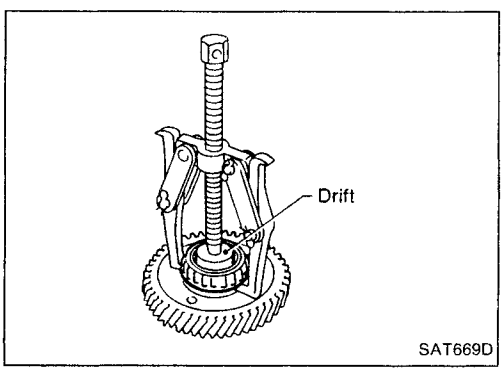

4. Remove output gear bearing inner race.

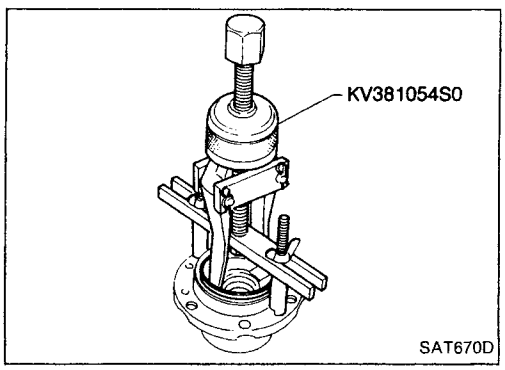

5. Remove output gear bearing outer race from bearing retainer.

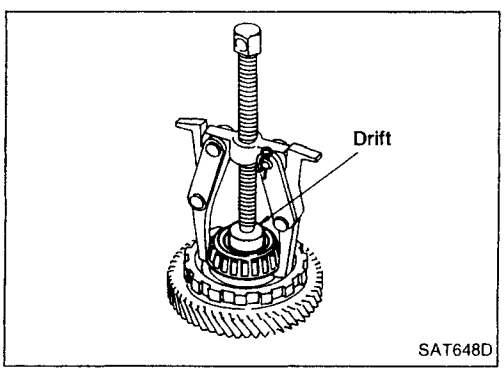

6. Remove idler gear bearing inner race.

AT

Simpo PDF Merge and Split Unregistered Version - http://www.simpopdf.com

Output Shaft, Output Gear, Idler Gear, Reduction Pinion Gear and Bearing Retainer — Except Model 34X81 (Cont'd)

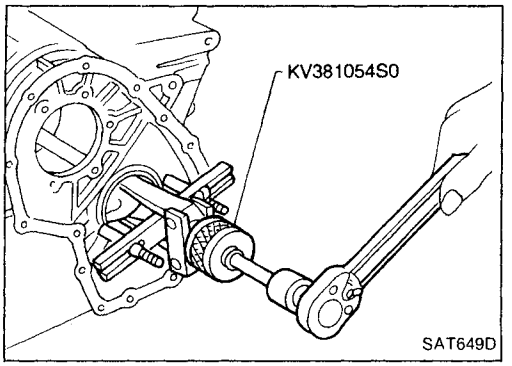

7. Remove idler gear bearing outer race from transmission case.

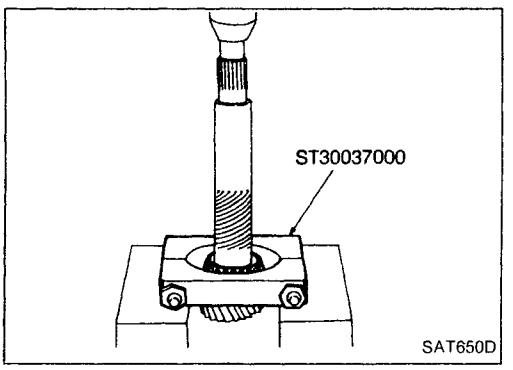

8. Press out reduction pinion gear inner race from reduction pinion gear.

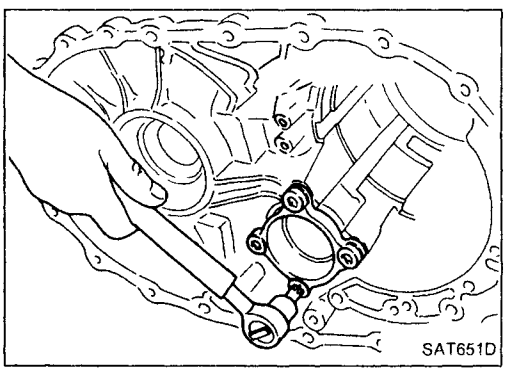

9. Remove reduction pinion gear bearing outer race from transmission case.

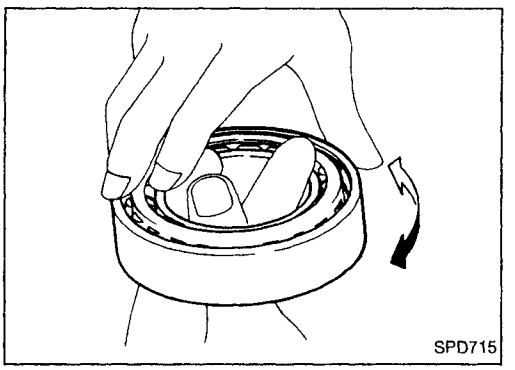

INSPECTION

Output shaft, output gear, idler gear and reduction pinion gear

- Check shafts for cracks, wear or bending.
- Check gears for wear, chips and cracks.

Bearings

- Make sure bearings roll freely and are free from noise, cracks, pitting or wear.
- **When replacing taper roller bearing, replace inner and outer races as a set.**

Simpo PDF Merge and Split Unregistered Version - http://www.simpopdf.com

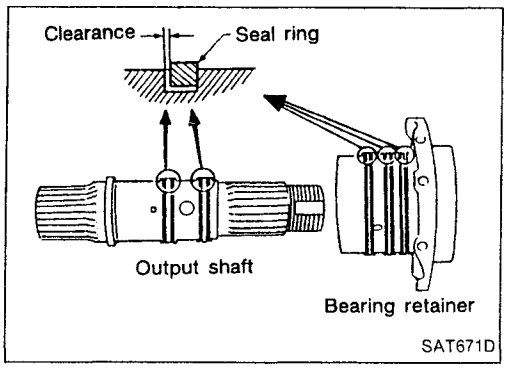

Output Shaft, Output Gear, Idler Gear, Reduction Pinion Gear and Bearing Retainer — Except Model 34X81 (Cont'd)

Seal ring clearance

- Install new seal rings to output shaft.
- Measure clearance between seal ring and ring groove of output shaft.
  Standard clearance:
  0.10 - 0.25 mm (0.0039 - 0.0098 in)
  Wear limit:
  0.25 mm (0.0098 in)
- If not within wear limit, replace output shaft.
- Install new seal rings to bearing retainer.
- Measure clearance between seal ring and ring groove of bearing retainer.
  Standard clearance:
  0.10 - 0.25 mm (0.0039 - 0.0098 in)
  Wear limit:
  0.25 mm (0.0098 in)
- If not within wear limit, replace bearing retainer.

AT

ASSEMBLY

1. Press reduction pinion gear bearing inner race on reduction pinion gear.

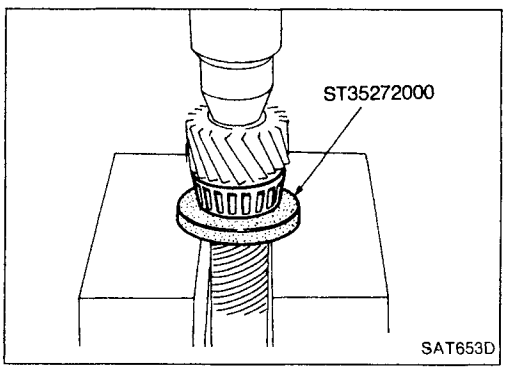

2. Install reduction pinion gear bearing outer race on transmission case.

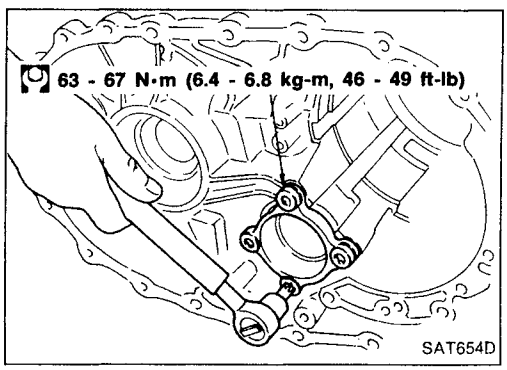

3. Press idler gear bearing inner race on idler gear.

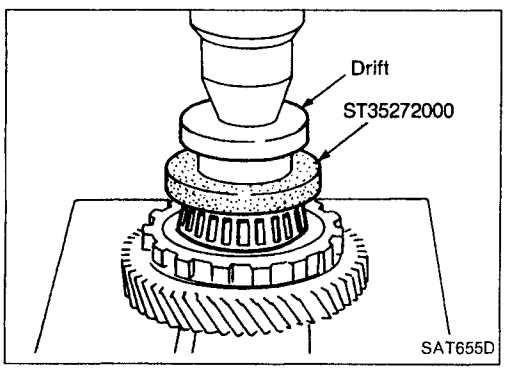

Simpo PDF Merge and Split Unregistered Version - http://www.simpopdf.com

Output Shaft, Output Gear, Idler Gear, Reduction Pinion Gear and Bearing Retainer — Except Model 34X81 (Cont'd)

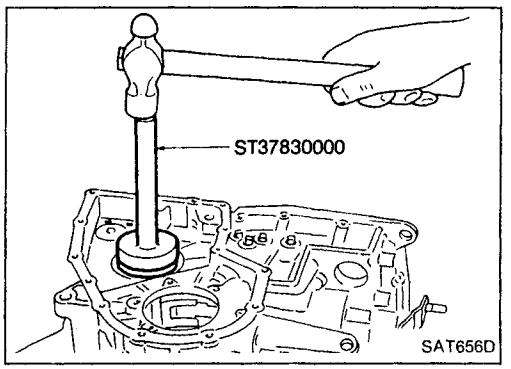

4. Install idler gear bearing outer race on transmission case.

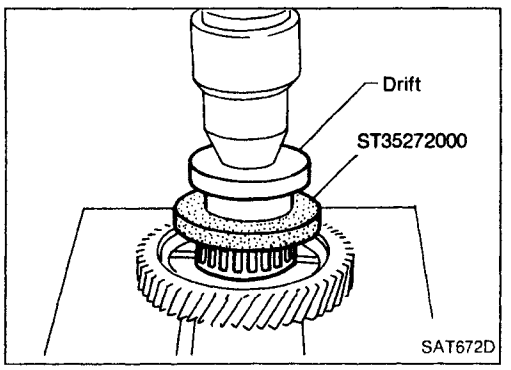

5. Press output gear bearing inner race on output gear.

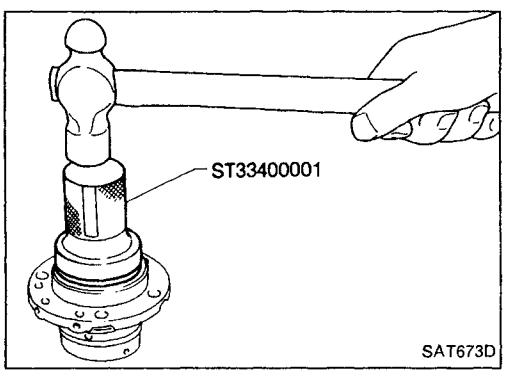

6. Install output gear bearing outer race on bearing retainer.

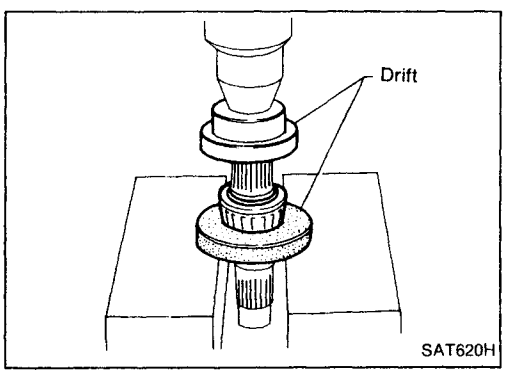

7. Press output shaft bearing inner race on output shaft.

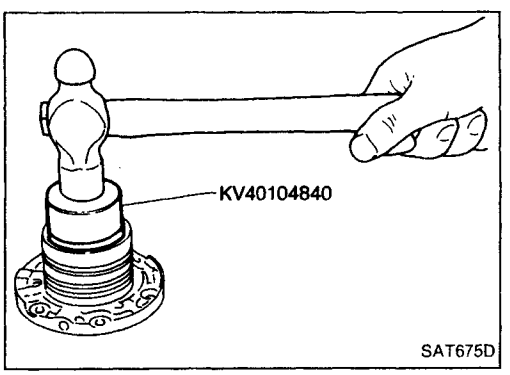

8. Install output shaft bearing outer race on bearing retainer.

Simpo PDF Merge and Split Unregistered Version - http://www.simpopdf.com

Output Shaft, Output Gear, Idler Gear, Reduction Pinion Gear and Bearing Retainer — Except Model 34X81 (Cont'd)

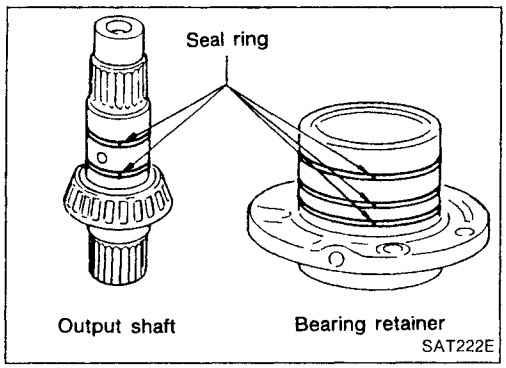

9. Install new seal rings onto output shaft and bearing retainer.
- **Apply petroleum jelly to seal rings.**

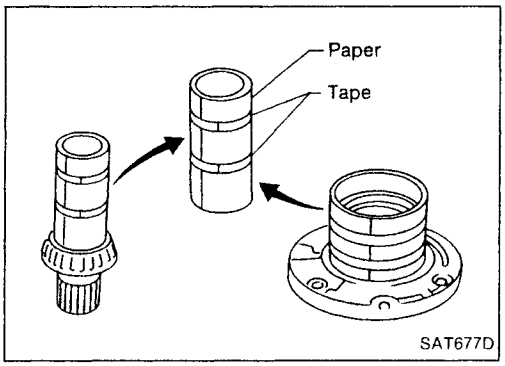

10. Roll paper around seal rings to prevent seal rings from spreading.

AT

Output Shaft, Idler Gear, Reduction Pinion Gear and Bearing Retainer — Model 34X81

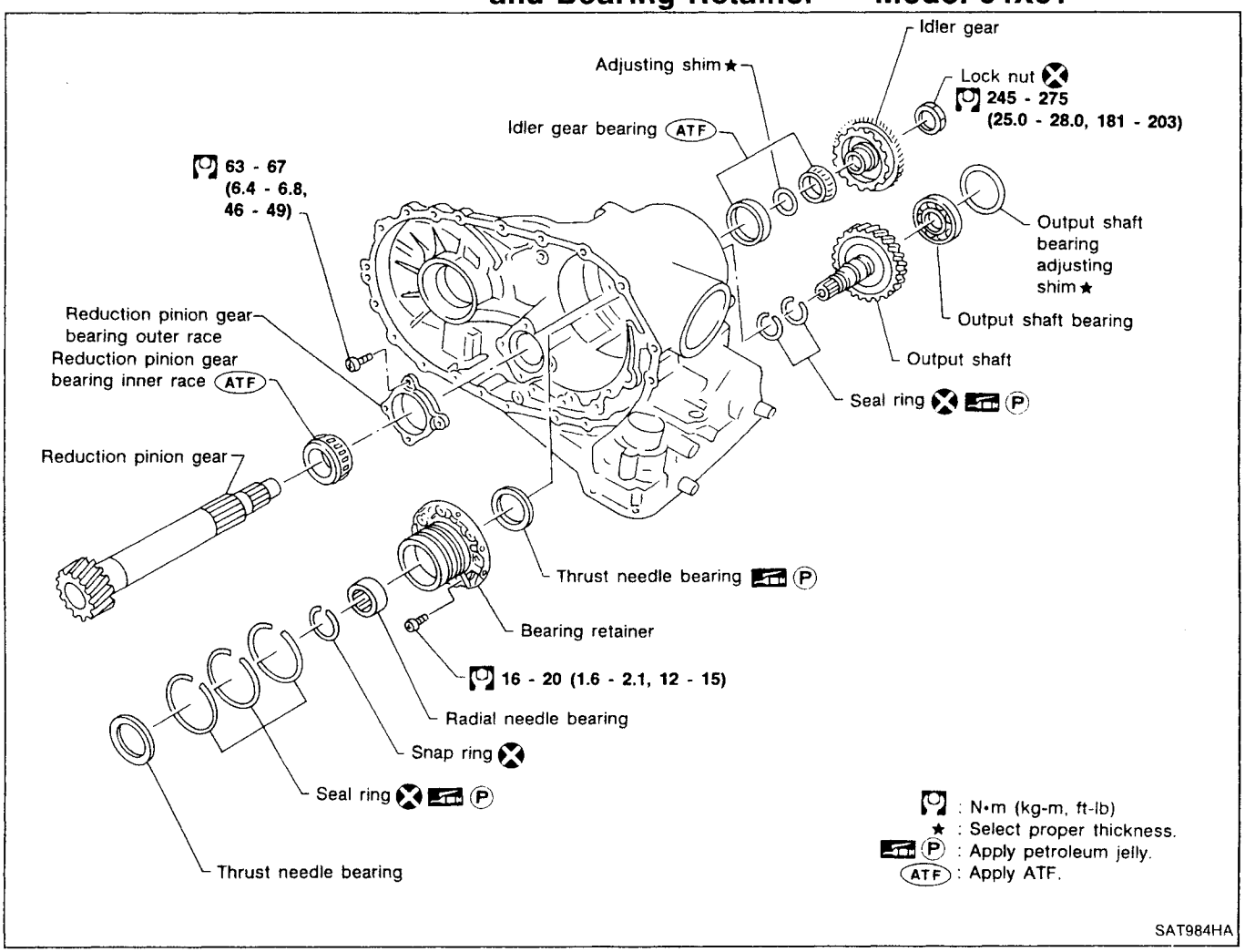

Simpo PDF Merge and Split Unregistered Version - http://www.simpopdf.com

Output Shaft, Idler Gear, Reduction Pinion Gear and Bearing Retainer — Model 34X81 (Cont'd)

DISASSEMBLY

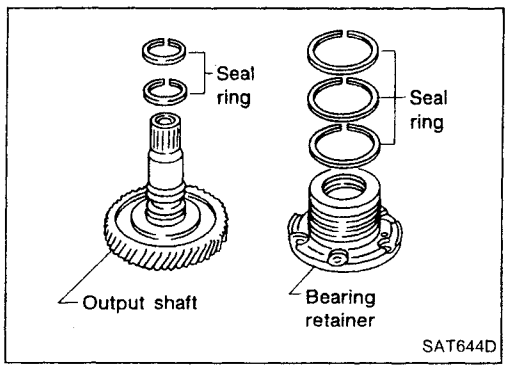

1. Remove seal rings from output shaft and bearing retainer.

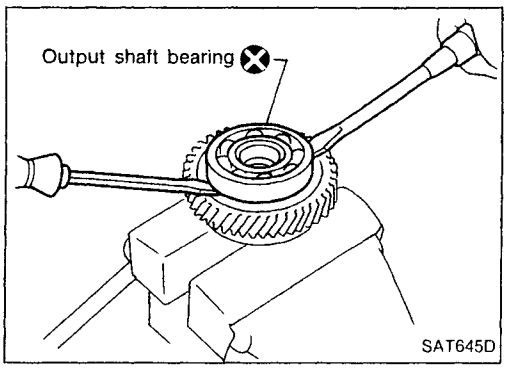

2. Remove output shaft bearing with screwdrivers.
- **Always replace bearing with a new one when removed.**
- **Do not damage output shaft.**

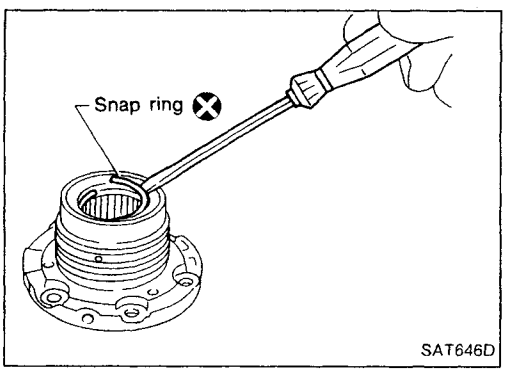

3. Remove snap ring from bearing retainer.

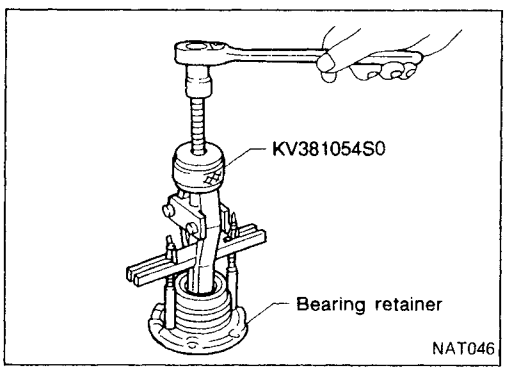

4. Remove needle bearing from bearing retainer.

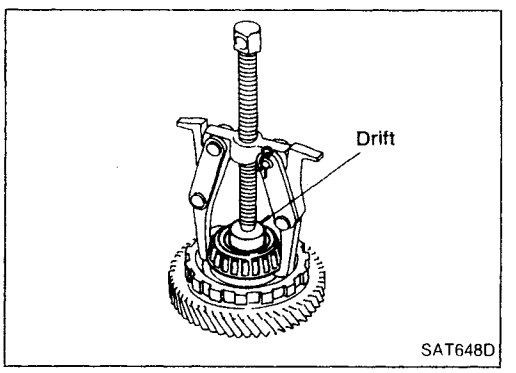

5. Remove idler gear bearing inner race from idler gear.

Simpo PDF Merge and Split Unregistered Version - http://www.simpopdf.com

Output Shaft, Idler Gear, Reduction Pinion Gear and Bearing Retainer — Model 34X81 (Cont'd)

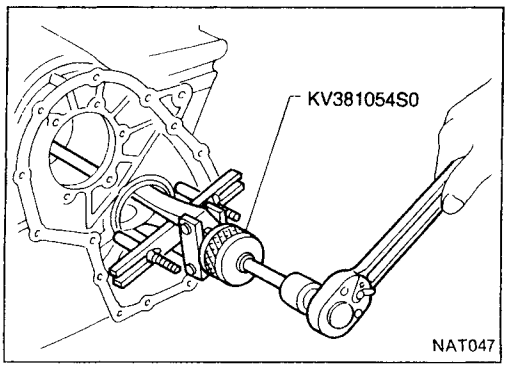

6. Remove idler gear bearing outer race from transmission case.

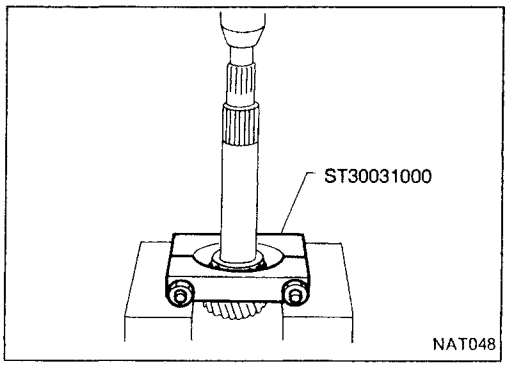

7. Press out reduction pinion gear bearing inner race from reduction pinion gear.

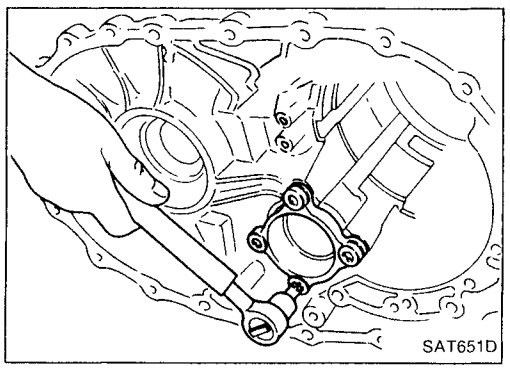

8. Remove reduction pinion gear bearing outer race from transmission case.

AT

INSPECTION

Output shaft, idler gear and reduction pinion gear

- Check shafts for cracks, wear or bending.
- Check gears for wear, chips and cracks.

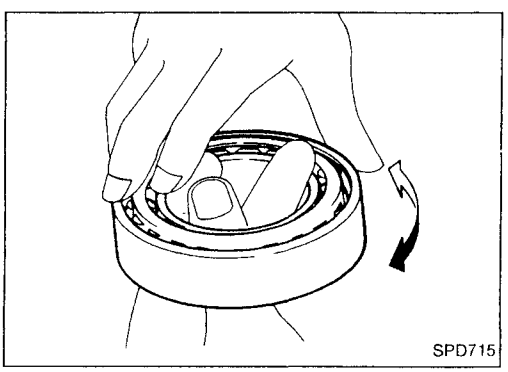

Bearing

- Make sure bearings roll freely and are free from noise, cracks, pitting or wear.
- **When replacing taper roller bearing, replace outer and inner race as a set.**

Simpo PDF Merge and Split Unregistered Version - http://www.simpopdf.com

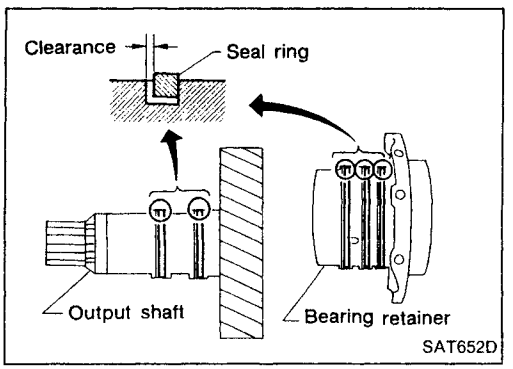

Output Shaft, Idler Gear, Reduction Pinion Gear and Bearing Retainer — Model 34X81 (Cont'd)

Seal ring clearance

- Install new seal rings to output shaft.
- Measure clearance between seal ring and ring groove of output shaft.
  Standard clearance:
  0.10 - 0.25 mm (0.0039 - 0.0098 in)
  Allowable limit:
  0.25 mm (0.0098 in)
- If not within allowable limit, replace output shaft.
- Install new seal rings to bearing retainer.
- Measure clearance between seal ring and ring groove of bearing retainer.
  Standard clearance:
  0.10 - 0.25 mm (0.0039 - 0.0098 in)
  Allowable limit:
  0.25 mm (0.0098 in)
- If not within allowable limit, replace bearing retainer.

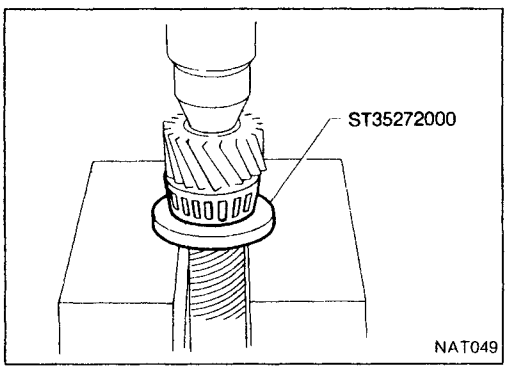

ASSEMBLY

1. Press reduction pinion gear bearing inner race on reduction pinion gear.

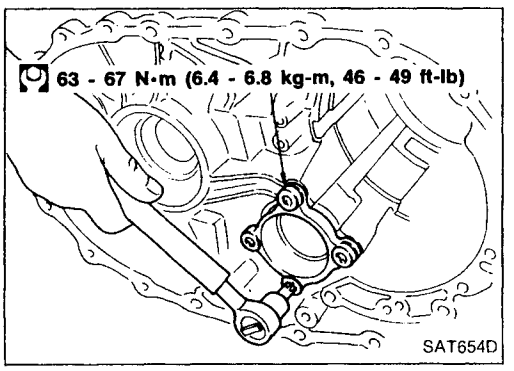

2. Install reduction pinion gear bearing outer race on transmission case.

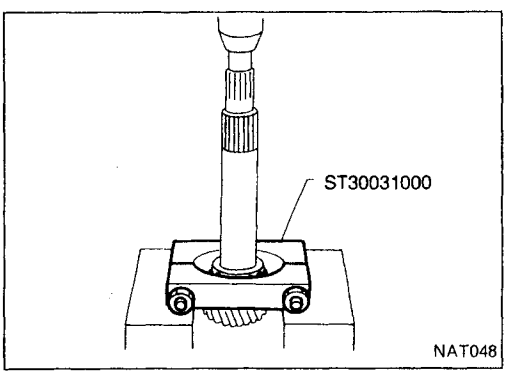

3. Press idler gear bearing inner race on idler gear.

Simpo PDF Merge and Split Unregistered Version - http://www.simpopdf.com

Output Shaft, Idler Gear, Reduction Pinion Gear and Bearing Retainer — Model 34X81 (Cont'd)

4. Install idler gear bearing outer race on transmission case.

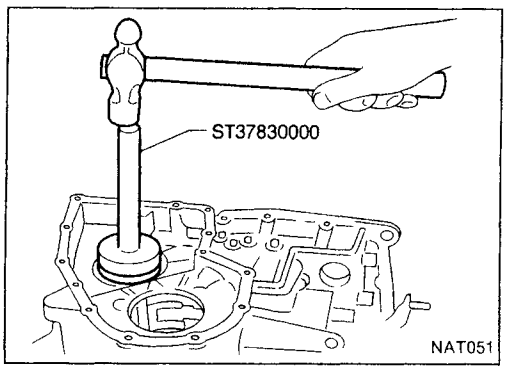

5. Press output shaft bearing on output shaft.

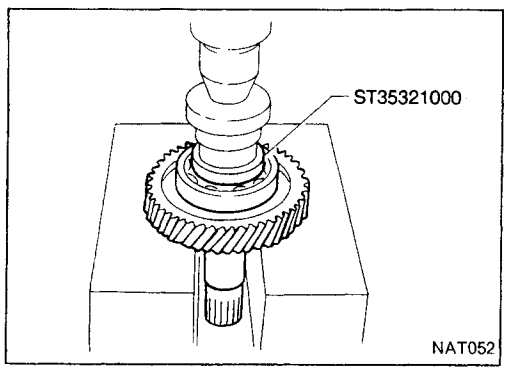

6. Press needle bearing on bearing retainer.

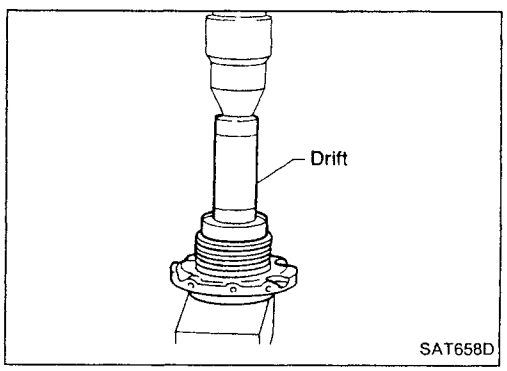

7. Install snap ring to bearing retainer.

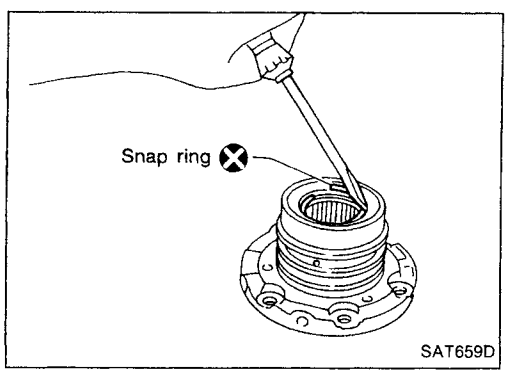

8. After packing ring grooves with petroleum jelly, carefully install new rings on output shaft and bearing retainer.

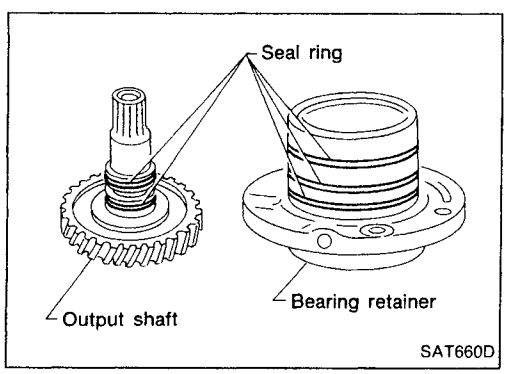

AT

Simpo PDF Merge and Split Unregistered Version - http://www.simpopdf.com

Output Shaft, Idler Gear, Reduction Pinion Gear and Bearing Retainer — Model 34X81 (Cont'd)

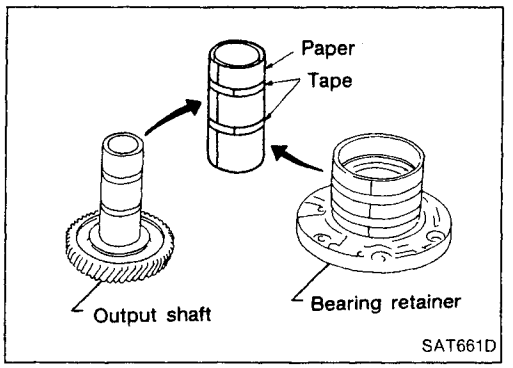

- **Roll paper around seal rings to prevent seal rings from spreading.**

Band Servo Piston Assembly

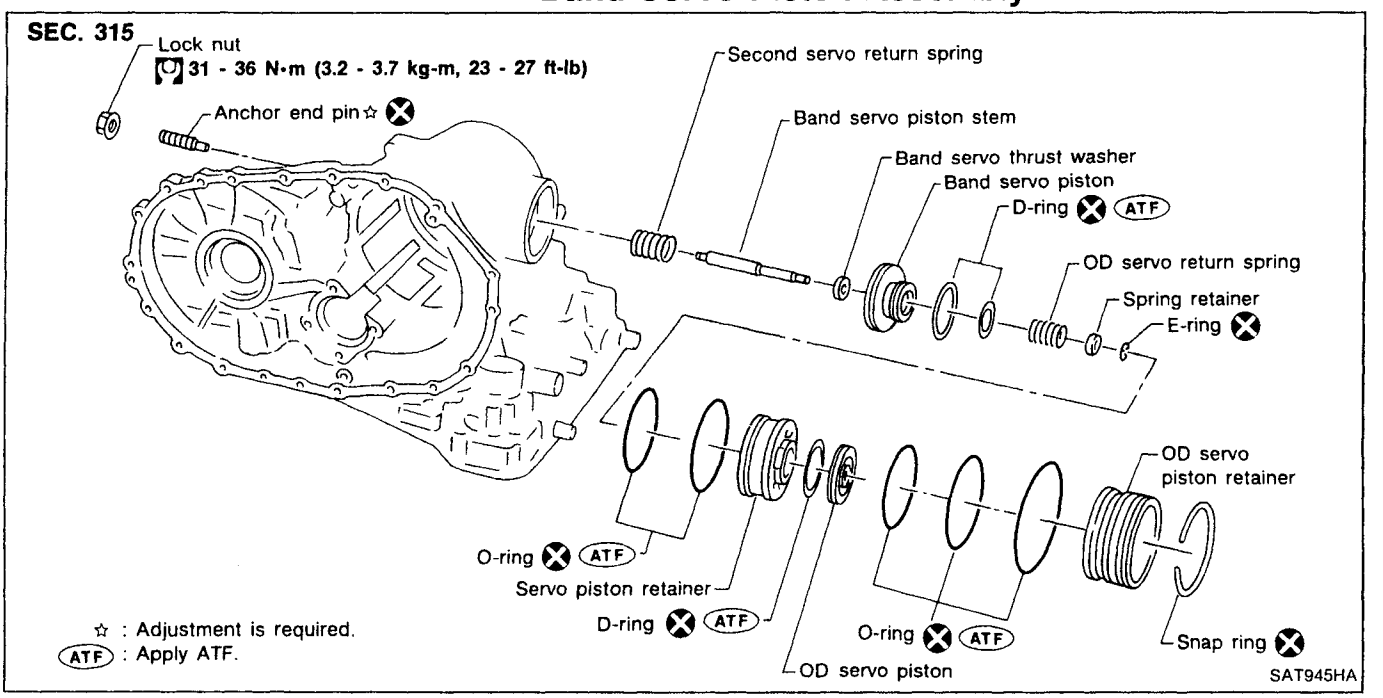

DISASSEMBLY

1. Remove band servo piston snap ring.

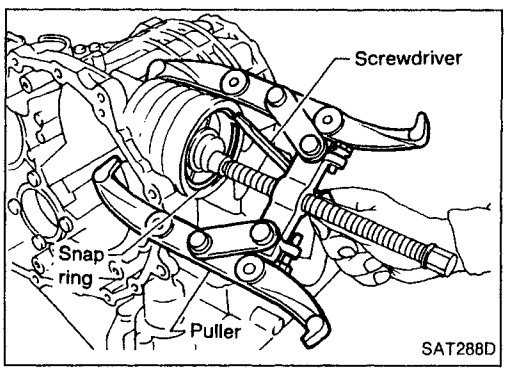

2. Apply compressed air to oil hole in transmission case to remove OD servo piston retainer and band servo piston assembly.
- **Hold band servo piston assembly with a rag.**

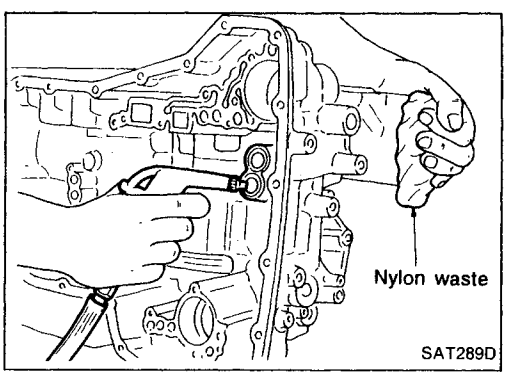

Simpo PDF Merge and Split Unregistered Version - http://www.simpopdf.com

Band Servo Piston Assembly (Cont'd)

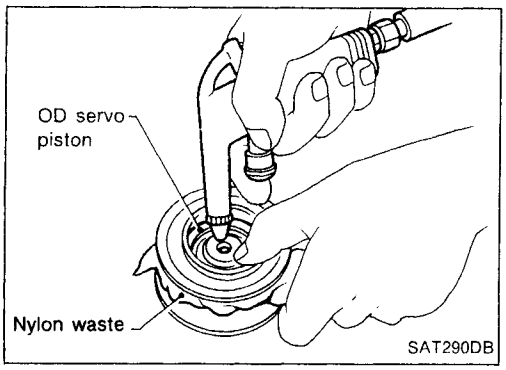

3. Apply compressed air to oil hole in OD servo piston retainer to remove OD servo piston from retainer.
- **Hold OD servo piston while applying compressed air.**

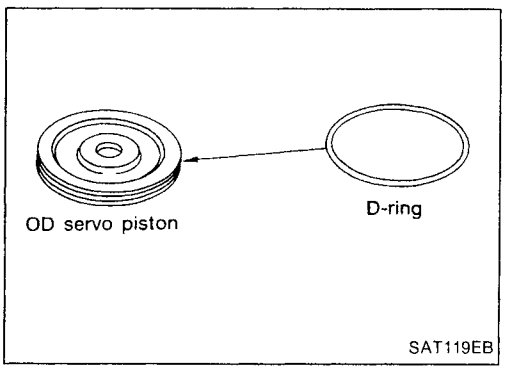

4. Remove D-ring from OD servo piston.

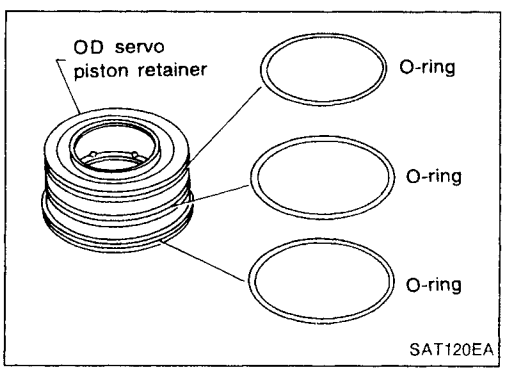

5. Remove O-rings from OD servo piston retainer.

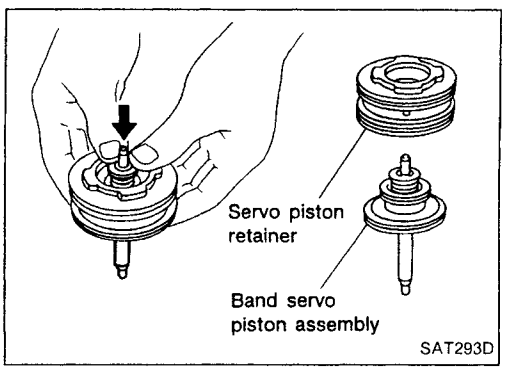

6. Remove band servo piston assembly from servo piston retainer by pushing it forward.

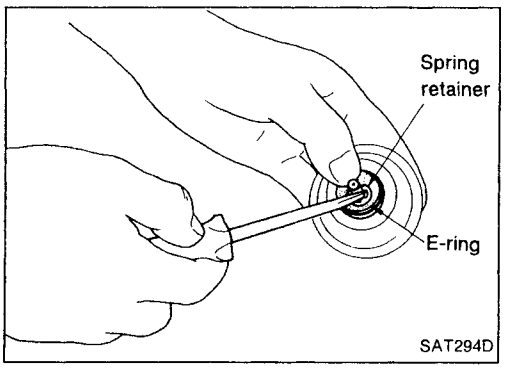

7. Place piston stem end on a wooden block. While pushing servo piston spring retainer down, remove E-ring.

AT

Simpo PDF Merge and Split Unregistered Version - http://www.simpopdf.com

Band Servo Piston Assembly (Cont'd)

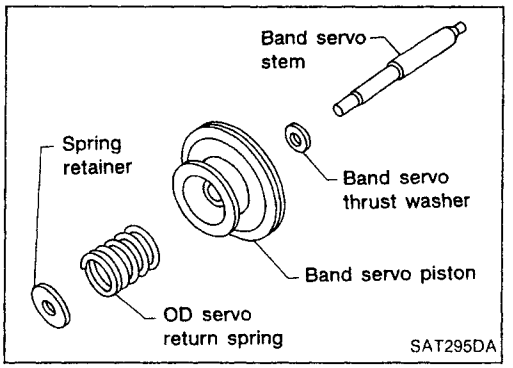

8. Remove OD servo return spring, band servo thrust washer and band servo piston stem from band servo piston.

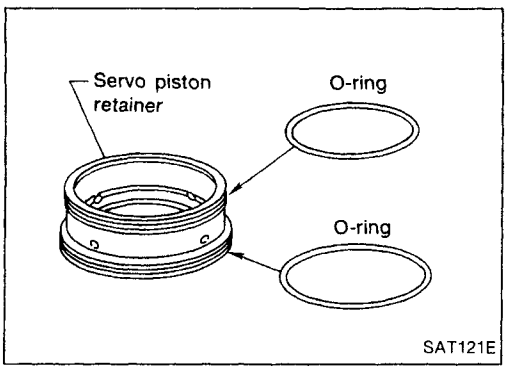

9. Remove O-rings from servo piston retainer.

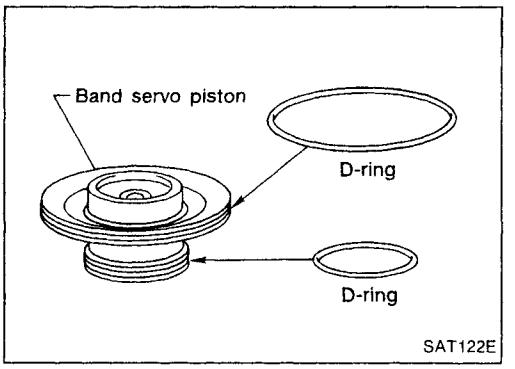

10. Remove D-rings from band servo piston.

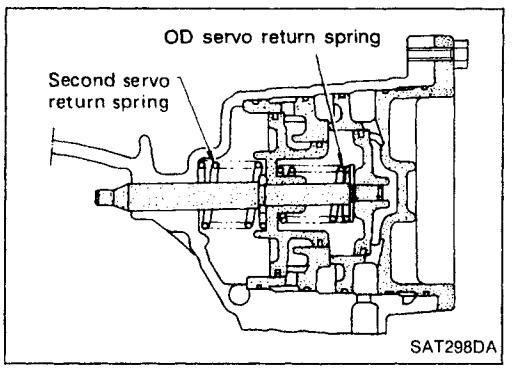

INSPECTION

Pistons, retainers and piston stem

- Check frictional surfaces for abnormal wear or damage.

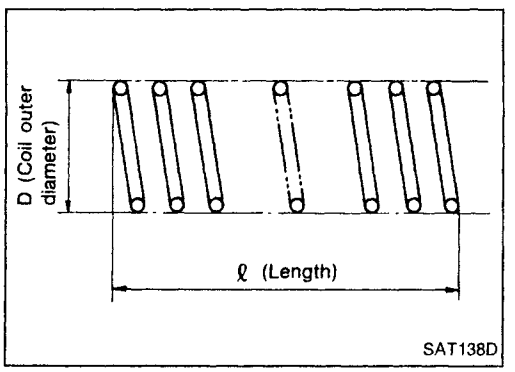

Return springs

- Check for deformation or damage.
- Measure free length and outer diameter.
  Inspection standard:
  Refer to SDS, AT-174.

Simpo PDF Merge and Split Unregistered Version - http://www.simpopdf.com

Band Servo Piston Assembly (Cont'd)

ASSEMBLY

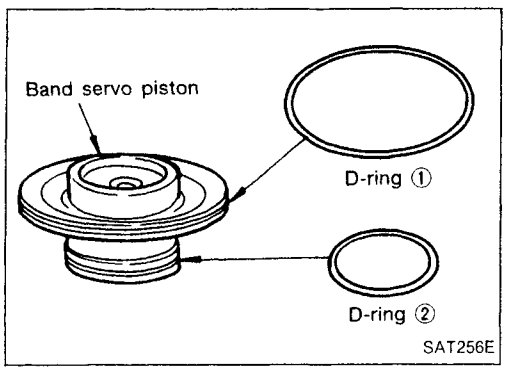

1. Install D-rings to band servo piston.
- **Apply ATF to D-rings.**
- **Pay attention to the position of each D-ring.**

D-rings:

Unit: mm (in)

D-ring	Inner diameter	
	Except model 34X81	Model 34X81
①	53.8 (2.118)	51.9 (2.043)
②	31.7 (1.248)	29.8 (1.173)

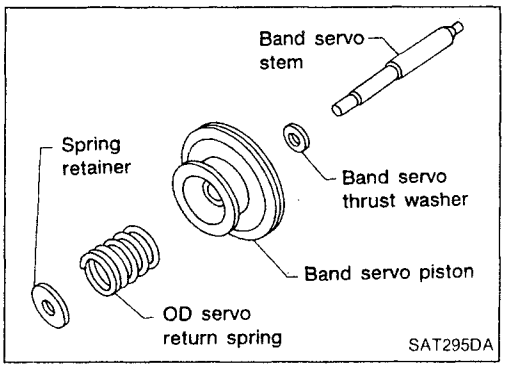

2. Install band servo piston stem, band servo thrust washer, OD servo return spring and spring retainer to band servo piston.

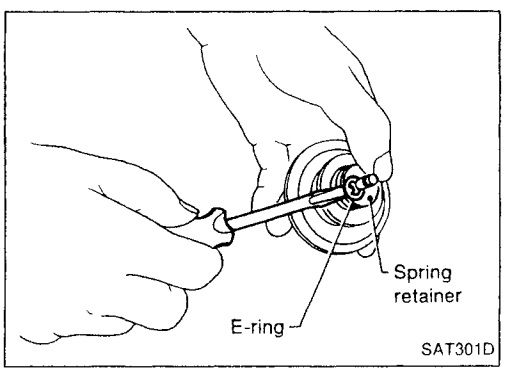

3. Place piston stem end on a wooden block. While pushing servo piston spring retainer down, install E-ring.

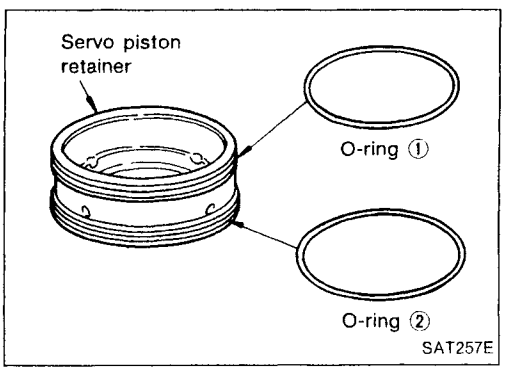

4. Install O-rings to servo piston retainer.
- **Apply ATF to O-rings.**
- **Pay attention to the position of each O-ring.**

O-rings:

Unit: mm (in)

O-ring	Inner diameter
①	65.5 (2.579)
②	67.0 (2.638)

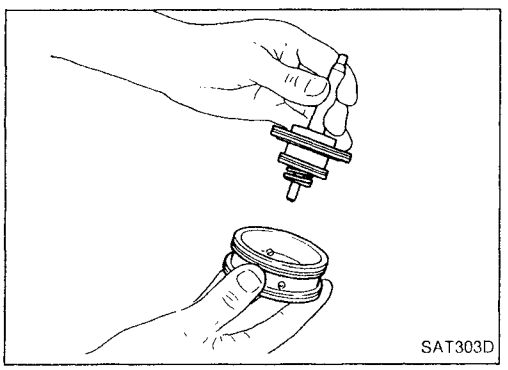

5. Install band servo piston assembly to servo piston retainer by pushing it inward.

AT

Simpo PDF Merge and Split Unregistered Version - http://www.simpopdf.com

Band Servo Piston Assembly (Cont'd)

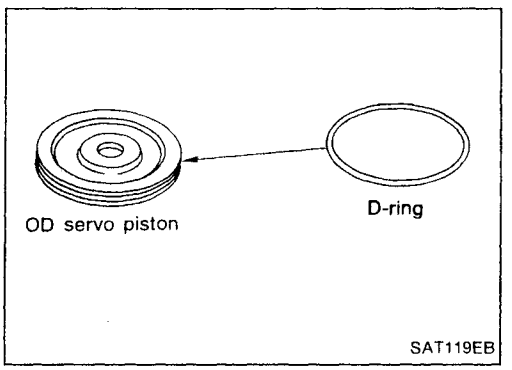

6. Install D-ring to OD servo piston.
- **Apply ATF to D-ring.**

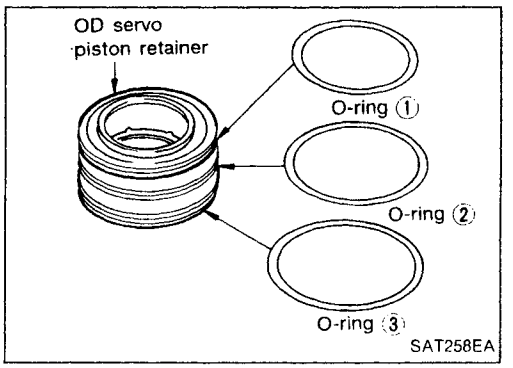

7. Install O-rings to OD servo piston retainer.
- **Apply ATF to O-rings.**
- **Pay attention to the position of each O-ring.**

O-rings:

Unit: mm (in)

O-ring	Inner diameter
①	69.5 (2.736)
②	71.0 (2.795)
③	73.0 (2.874)

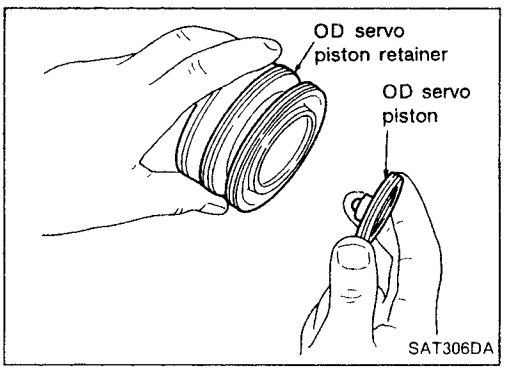

8. Install OD servo piston to OD servo piston retainer.

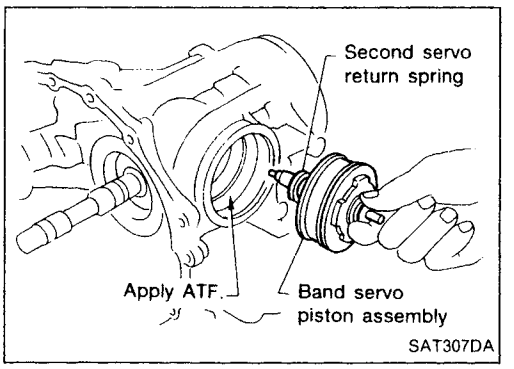

9. Install band servo piston assembly and 2nd servo return spring to transmission case.
- **Apply ATF to O-ring of band servo piston and transmission case.**

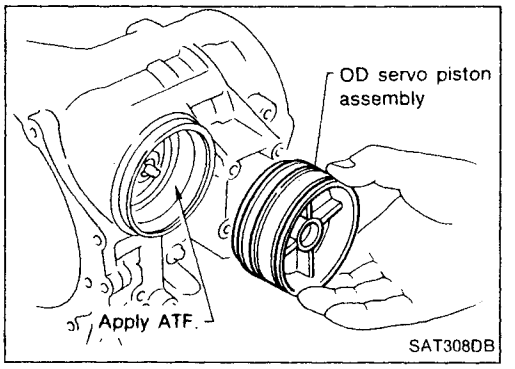

10. Install OD servo piston assembly to transmission case.
- **Apply ATF to O-ring of band servo piston and transmission case.**

Simpo PDF Merge and Split Unregistered Version - http://www.simpopdf.com

Band Servo Piston Assembly (Cont'd)

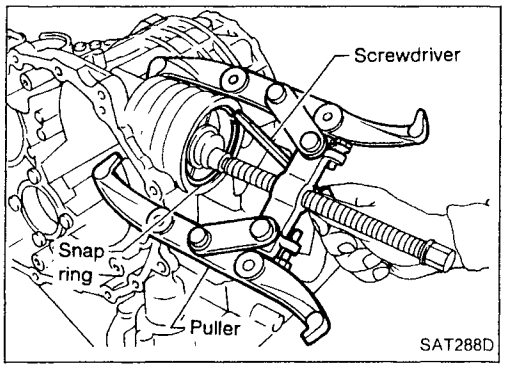

11. Install band servo piston snap ring to transmission case.

Final Drive — Except Model 34X81

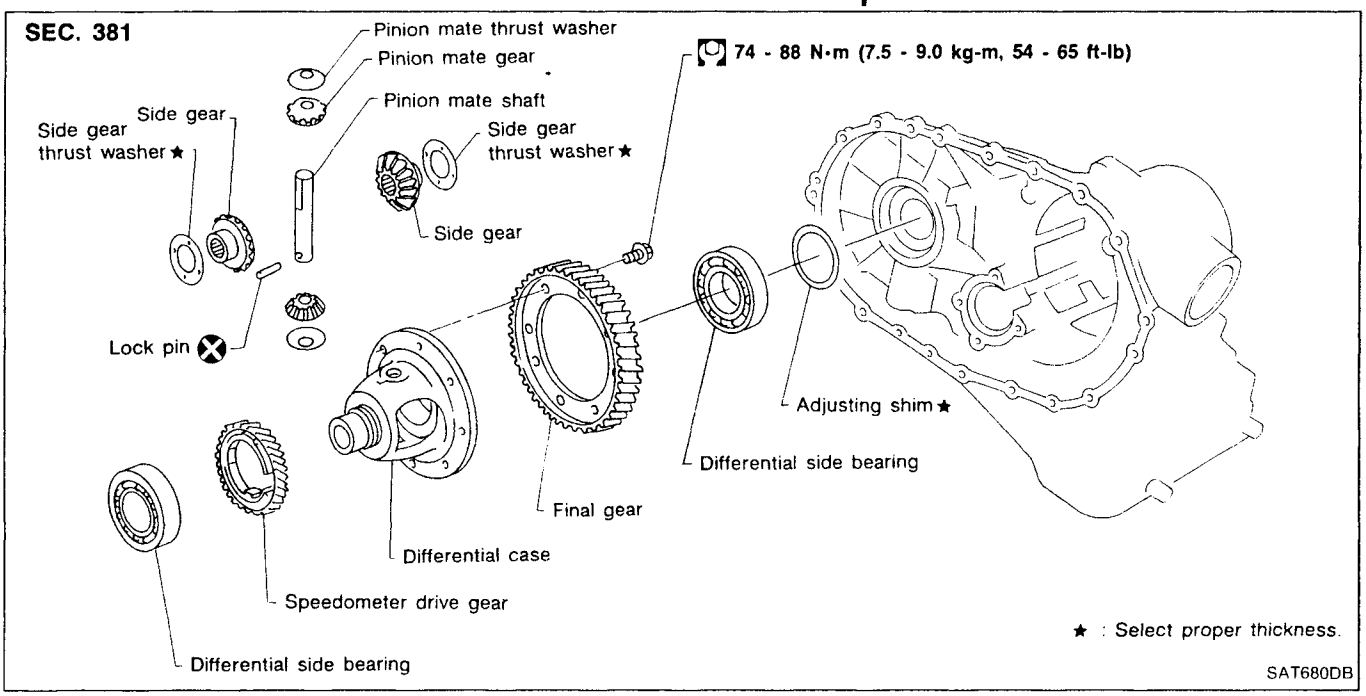

DISASSEMBLY

1. Remove final gear.

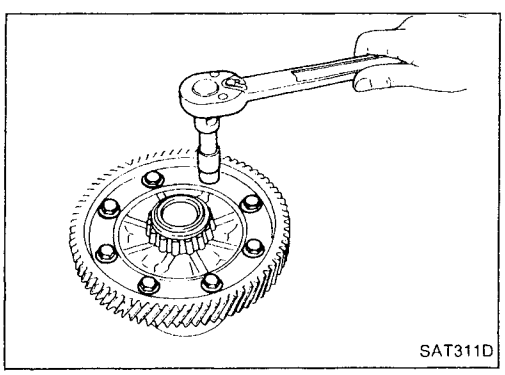

2. Press out differential side bearings.

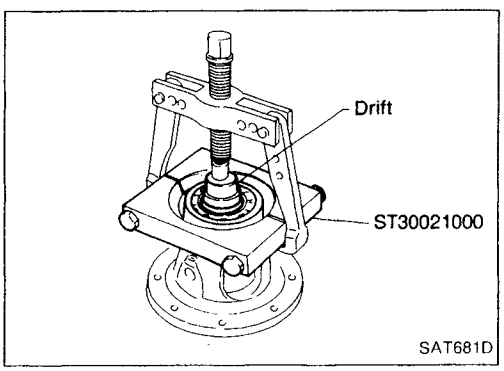

Simpo PDF Merge and Split Unregistered Version - http://www.simpopdf.com

Final Drive — Except Model 34X81 (Cont'd)

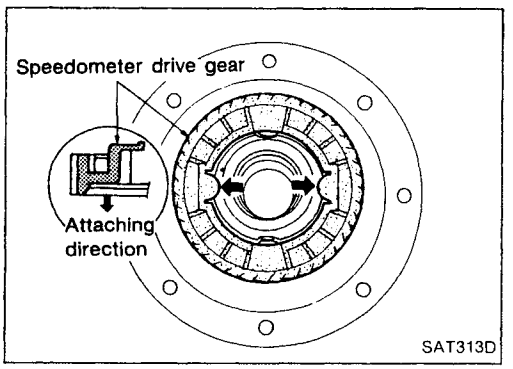

3. Remove speedometer drive gear.

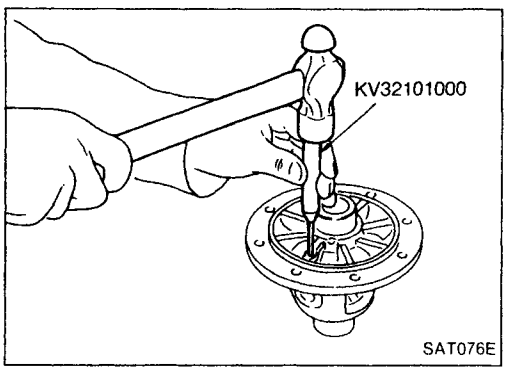

4. Drive out pinion mate shaft lock pin.

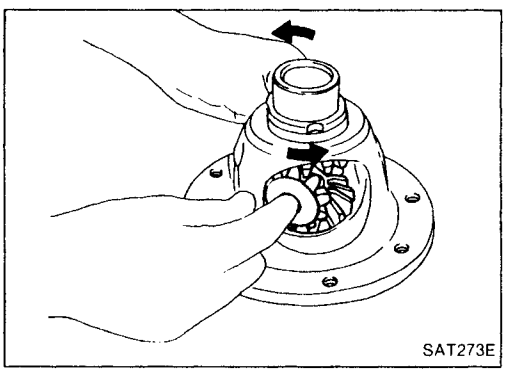

5. Draw out pinion mate shaft from differential case.
6. Remove pinion mate gears and side gears.

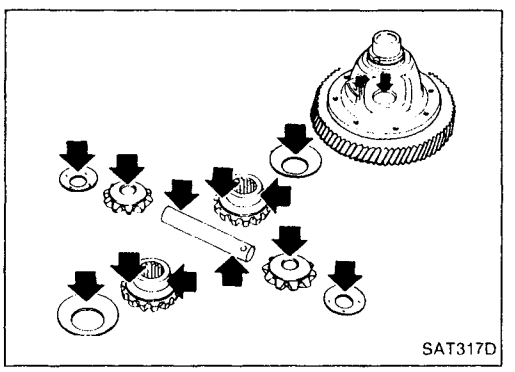

INSPECTION

Gear, washer, shaft and case

- Check mating surfaces of differential case, side gears and pinion mate gears.
- Check washers for wear.

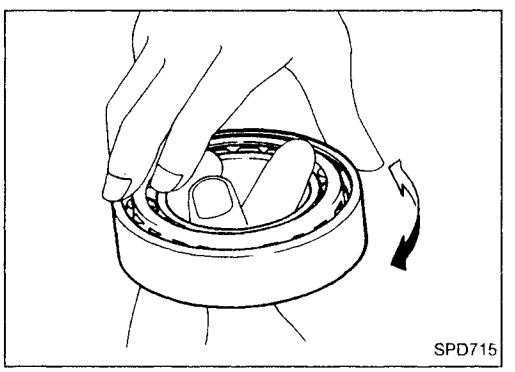

Bearings

- Make sure bearings roll freely and are free from noise, cracks, pitting or wear.

Simpo PDF Merge and Split Unregistered Version - http://www.simpopdf.com

Final Drive — Except Model 34X81 (Cont'd)

ASSEMBLY

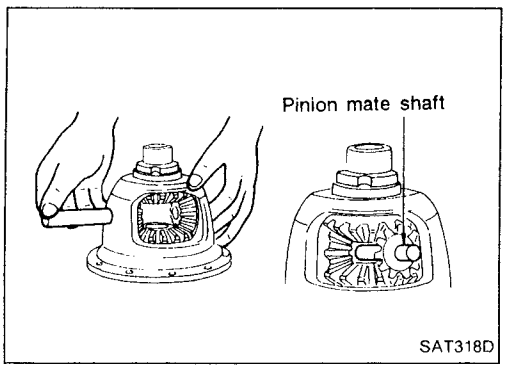

1. Install side gears and side gear thrust washers in differential case.
2. Install pinion mate gears and pinion mate thrust washers in the differential case while rotating them.

- **Apply ATF to all parts.**

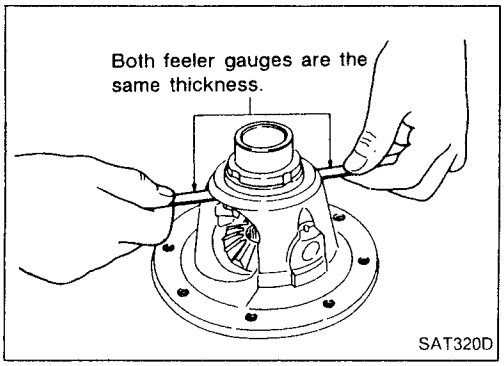

3. Measure clearance between side gear and differential case with washers.

Clearance between side gear and differential case with washers:
0.1 - 0.2 mm (0.004 - 0.008 in)

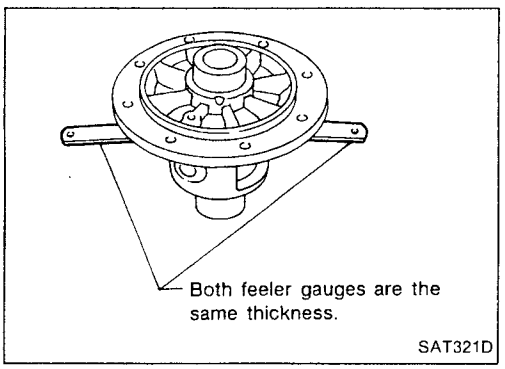

- If not within specification, adjust clearance by changing thickness of side gear thrust washers.

Side gear thrust washer:
Refer to SDS, AT-170.

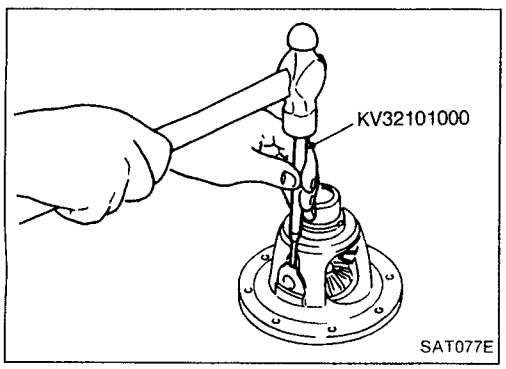

4. Install lock pin.

- **Make sure that lock pin is flush with case.**

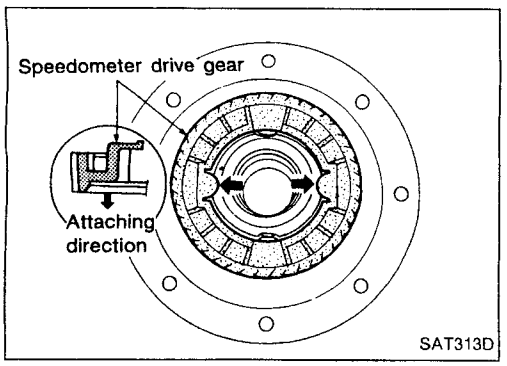

5. Install speedometer drive gear on differential case.

- **Align projection of speedometer drive gear with groove of differential case.**

AT

Simpo PDF Merge and Split Unregistered Version - http://www.simpopdf.com

Final Drive — Except Model 34X81 (Cont'd)

6. Press differential side bearings on differential case.

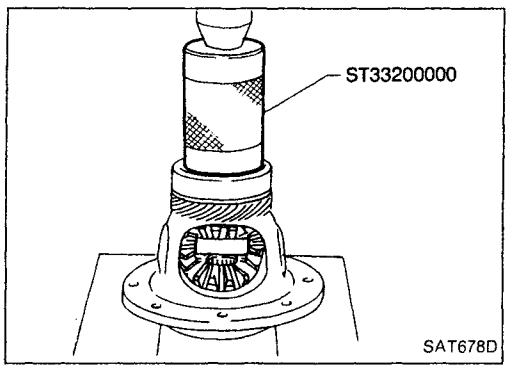

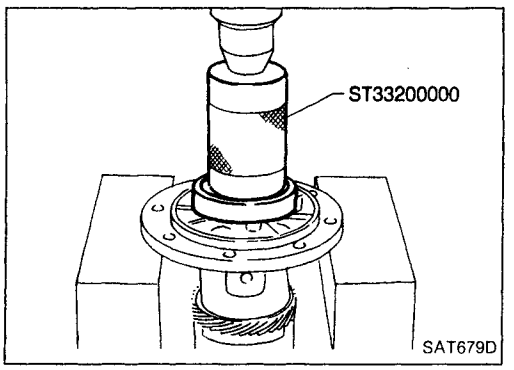

7. Install final gear and tighten fixing bolts in numerical order.

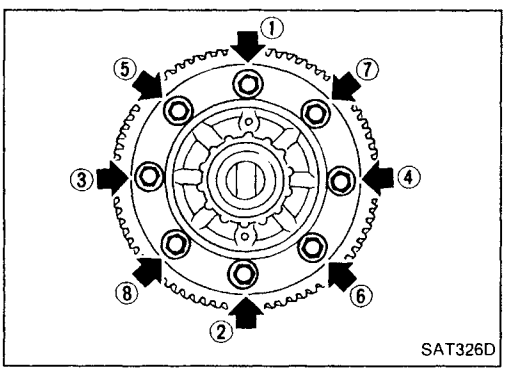

Simpo PDF Merge and Split Unregistered Version - http://www.simpopdf.com

Final Drive — Model 34X81

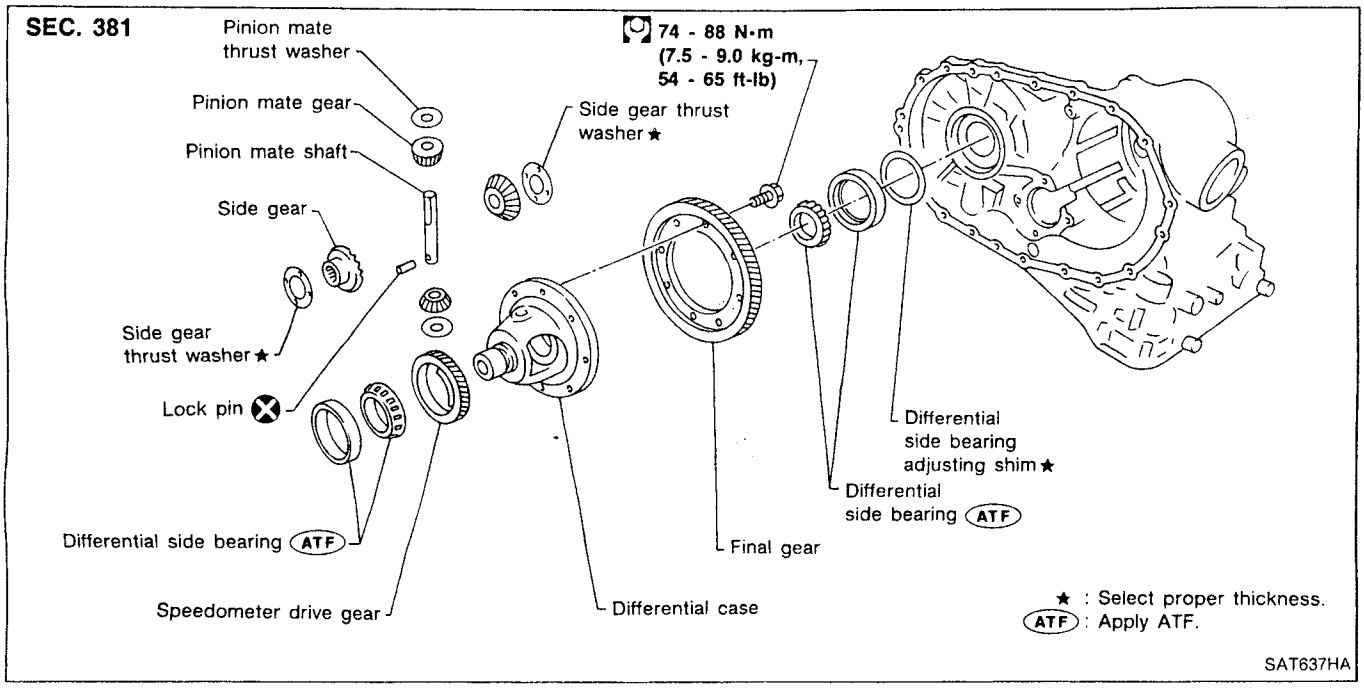

DISASSEMBLY

1. Remove final gear.

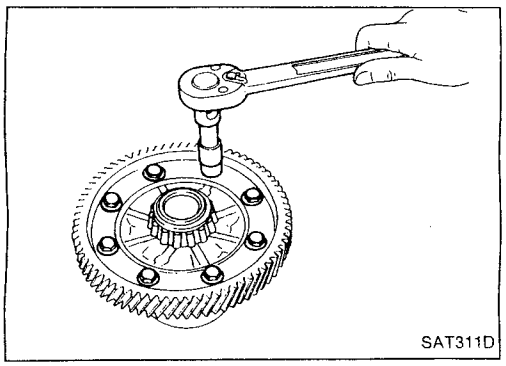

2. Press out differential side bearings.

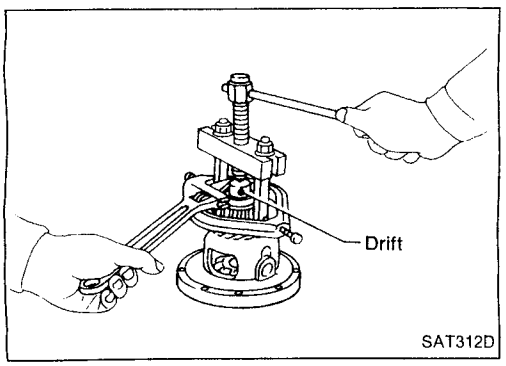

3. Remove speedometer drive gear.

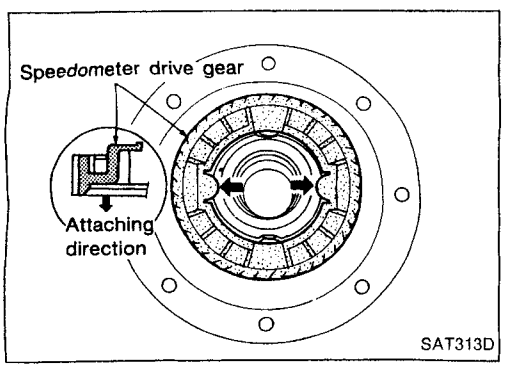

AT

Simpo PDF Merge and Split Unregistered Version - http://www.simpopdf.com

Final Drive — Model 34X81 (Cont'd)

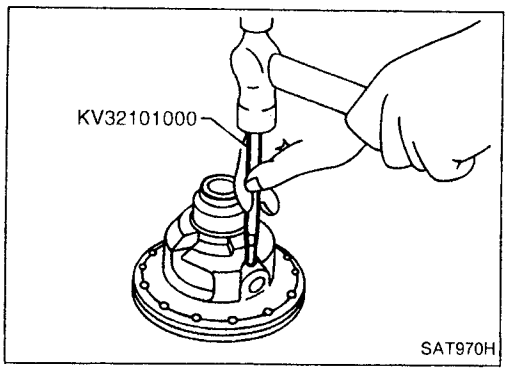

4. Drive out pinion mate shaft lock pin.

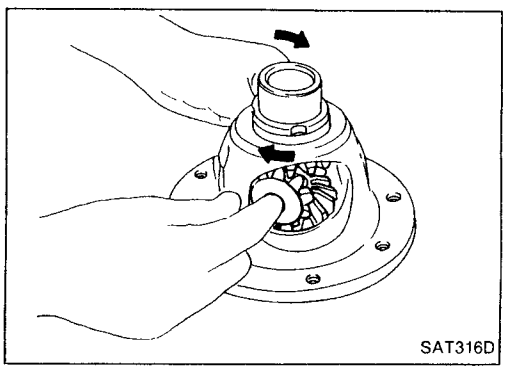

5. Draw out pinion mate shaft from differential case.
6. Remove pinion mate gears and side gears.

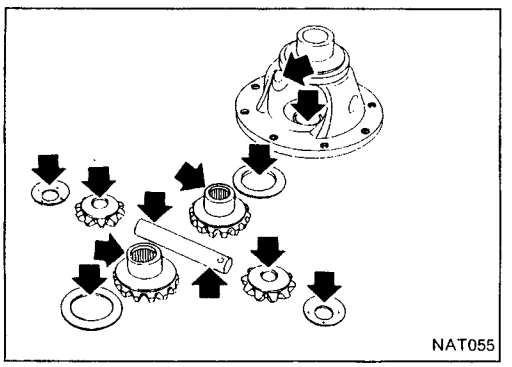

INSPECTION

Gear, washer, shaft and case

- Check mating surfaces of differential case, side gears and pinion mate gears.
- Check washers for wear.

Bearings

- Make sure bearings roll freely and are free from noise, cracks, pitting or wear.
- **When replacing taper roller bearing, replace outer and inner race as a set.**

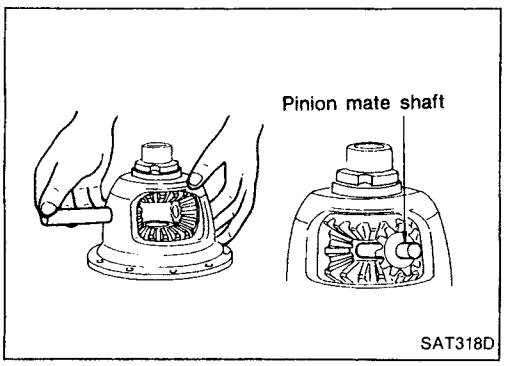

ASSEMBLY

1. Install side gear and thrust washers in differential case.
2. Install pinion mate gears and pinion mate thrust washers in differential case while rotating them.

- **Apply ATF to any parts.**

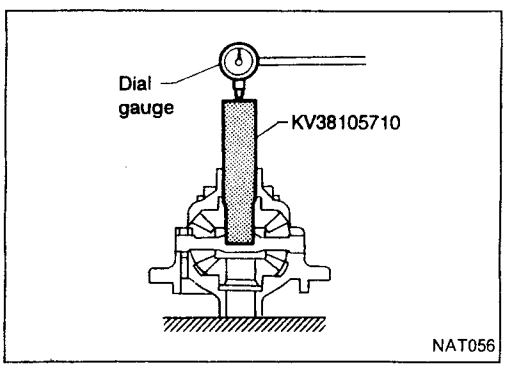

3. Measure clearance between side gear and differential case with washers using the following procedure.

a. Set Tool and dial indicator on side gear.
b. Move side gear up and down to measure dial indicator deflection. Always measure indicator deflection on both side gears.

Clearance between side gear and differential case with washers:

0.1 - 0.2 mm (0.004 - 0.008 in)

Simpo PDF Merge and Split Unregistered Version - http://www.simpopdf.com

Final Drive — Model 34X81 (Cont'd)

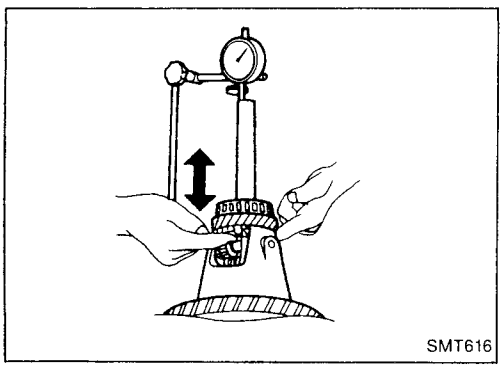

c. If not within specifications, adjust clearance by changing thickness of side gear thrust washers.
Side gear thrust washer:
Refer to SDS, AT-170.

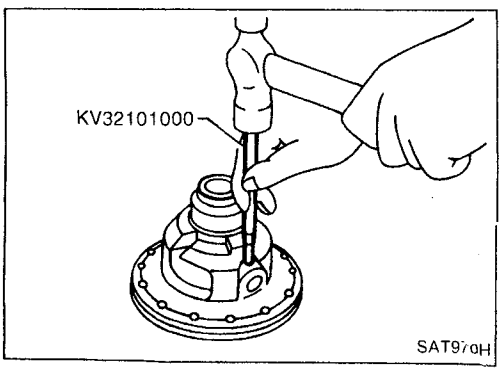

4. Install lock pin.
- **Make sure that lock pin is flush with case.**

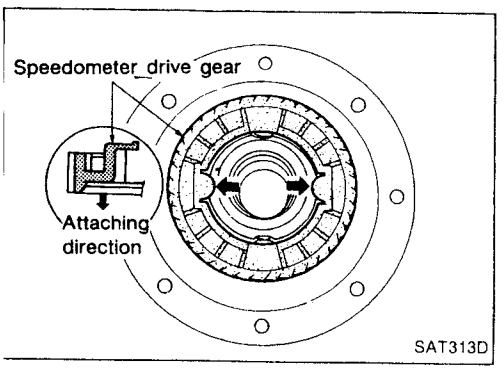

5. Install speedometer drive gear on differential case.
- **Align the projection of speedometer drive gear with the groove of differential case.**

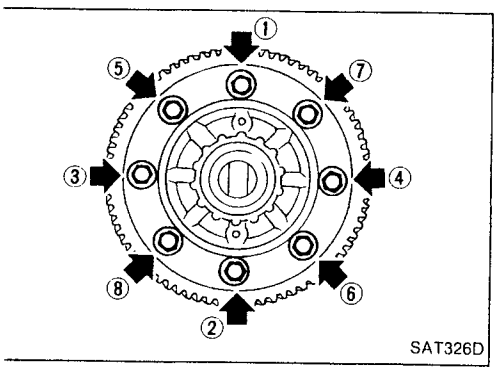

6. Install final gear and tighten fixing bolts in numerical order.

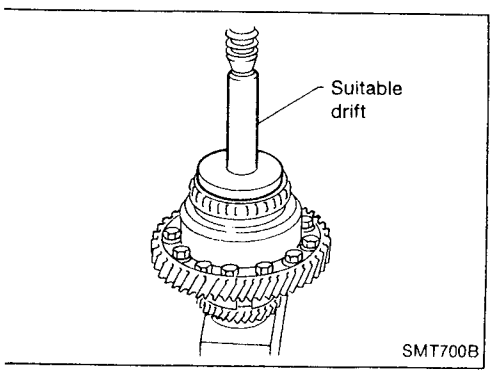

7. Press on differential side bearings.

Simpo PDF Merge and Split Unregistered Version - http://www.simpopdf.com

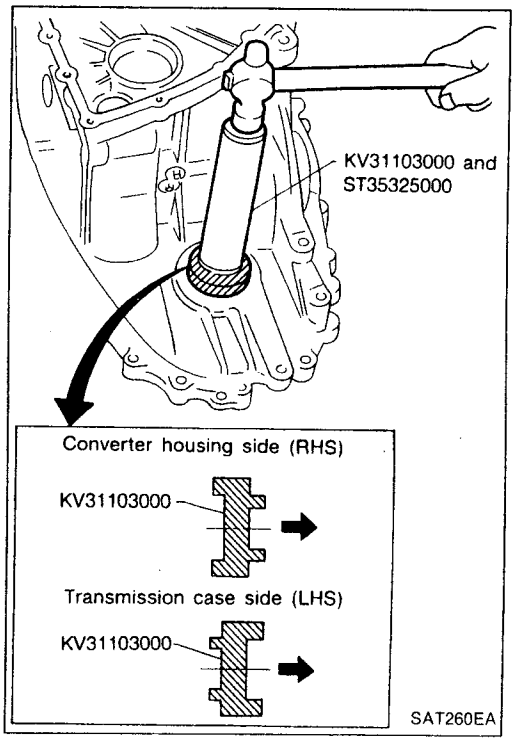

Assembly 1

1. Install differential side oil seals on transmission case and converter housing, so that "A" and "B" are within specifications.

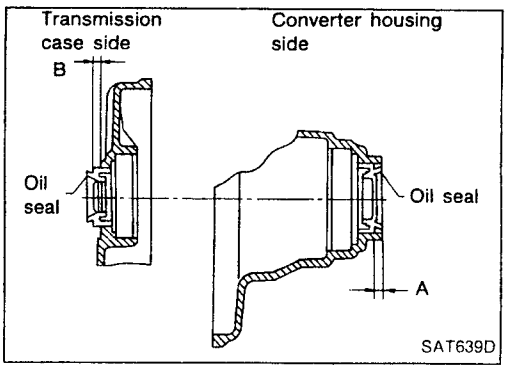

Unit: mm (in)

A	B
5.5 - 6.5 (0.217 - 0.256)	0.5 (0.020) or less

2. Install parking actuator support to transmission case.
- **Pay attention to direction of parking actuator support.**

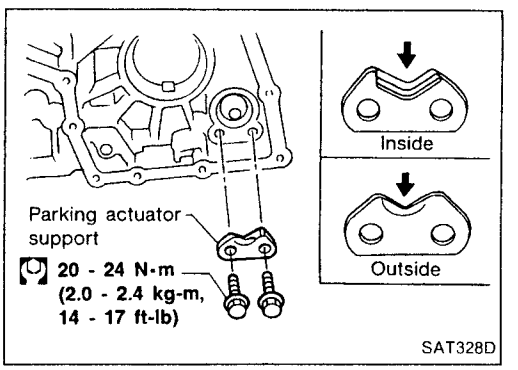

3. Install parking pawl on transmission case and fix it with parking shaft.

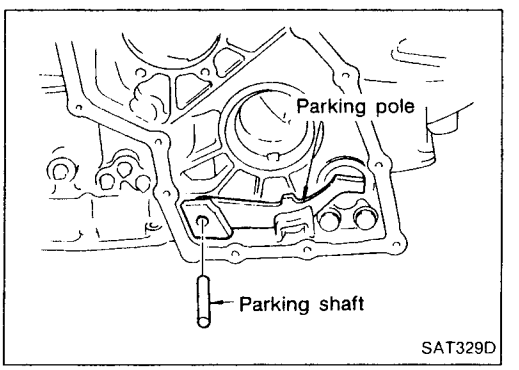

Simpo PDF Merge and Split Unregistered Version - http://www.simpopdf.com

Assembly 1 (Cont'd)

4. Install return spring.

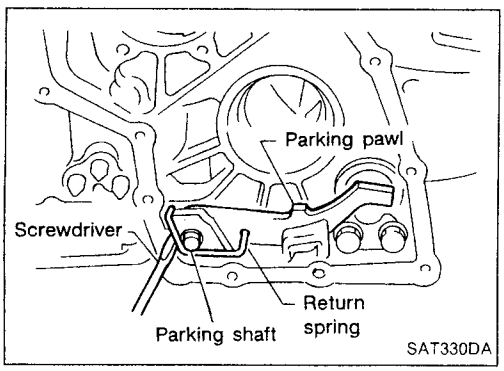

Adjustment 1

DIFFERENTIAL SIDE BEARING PRELOAD

— Model 34X81 —

1. Install differential side bearing outer race without adjusting shim on transmission case.
2. Install differential side bearing outer race on converter housing.

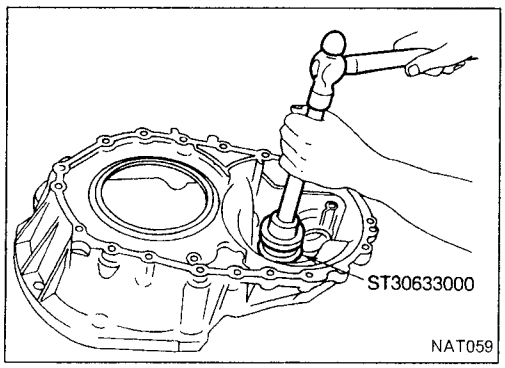

3. Place final drive assembly on transmission case.
4. Install transmission case on converter housing. Tighten transmission case fixing bolts Ⓐ and Ⓑ to the specified torque.

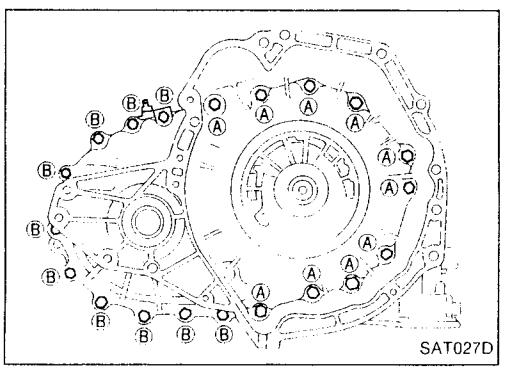

5. Attach dial indicator on differential case at transmission case side.
6. Insert Tool into differential side gear from converter housing.
7. Move Tool up and down and measure dial indicator deflection.
8. Select proper thickness of differential side bearing adjusting shim(s) using SDS table as a guide.

   Differential side bearing adjusting shim:
   Refer to SDS, AT-170.

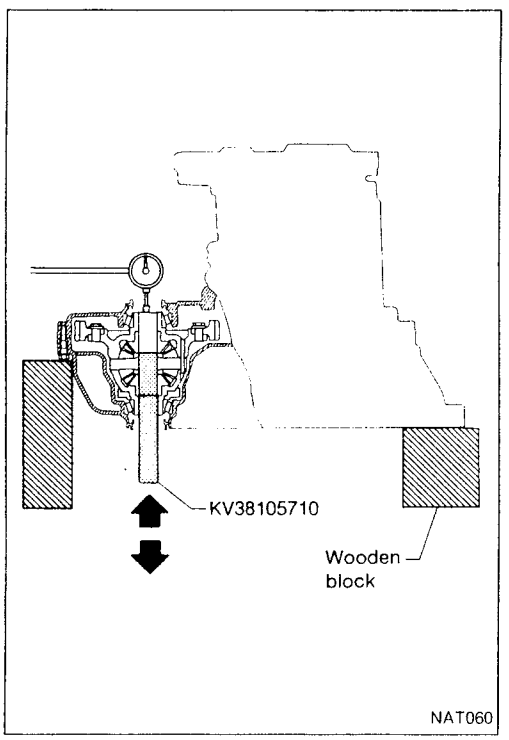

AT

Simpo PDF Merge and Split Unregistered Version - http://www.simpopdf.com

Adjustment 1 (Cont'd)

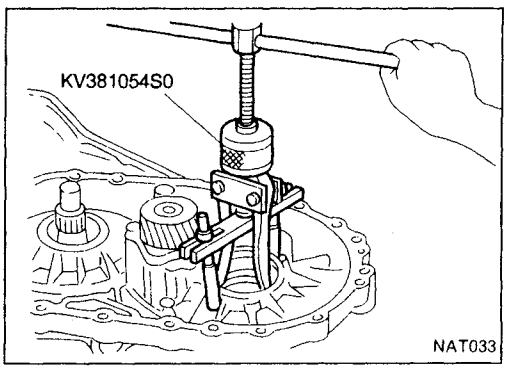

9. Remove converter housing from transmission case.
10. Remove final drive assembly from transmission case.
11. Remove differential side bearing outer race from transmission case.
12. Reinstall differential side bearing outer race and shim(s) selected from SDS table on transmission case.
13. Reinstall converter housing on transmission case and tighten transmission case fixing bolts to the specified torque.

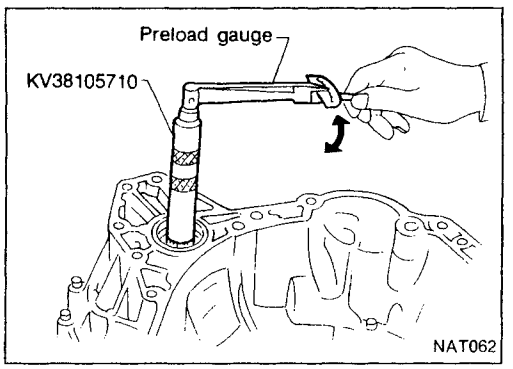

14. Insert Tool into differential case and measure turning torque of final drive assembly.

- **Turn final drive assembly in both directions several times to seat bearing rollers correctly.**
  Turning torque of final drive assembly (New bearing):
  0.49 - 1.08 N·m (5.0 - 11.0 kg-cm, 4.3 - 9.5 in-lb)
- **When old bearing is used again, turning torque will be slightly less than the above.**
- **Make sure torque is close to the specified range.**

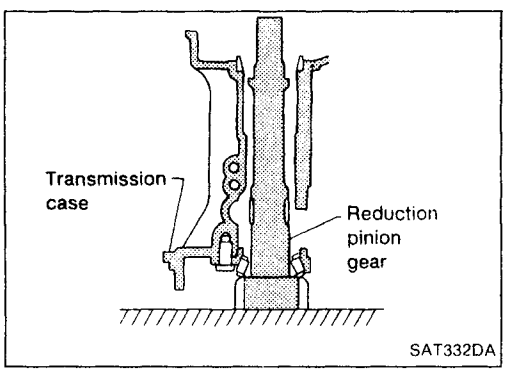

REDUCTION PINION GEAR BEARING PRELOAD

— All models —

1. Select proper thickness of reduction pinion gear bearing adjusting shim using the following procedures.

a. Place reduction pinion gear on transmission case as shown.

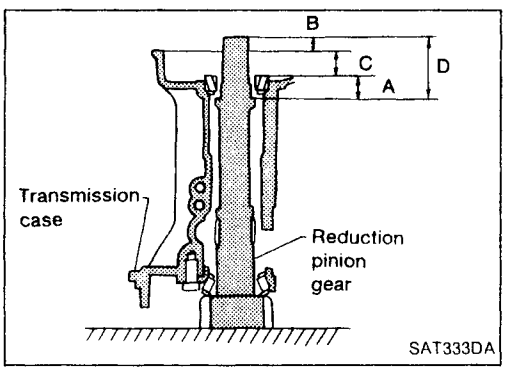

b. Place idler gear bearing on transmission case.
c. Measure dimensions "B", "C" and "D" and calculate dimension "A".

A = D – (B + C)

"A": Distance between surface of idler gear bearing inner race and adjusting shim mating surface of reduction pinion gear.

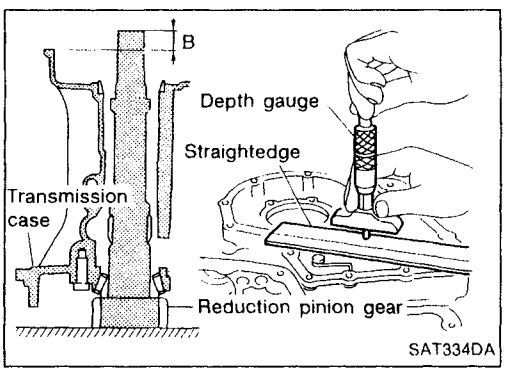

- Measure dimension "B" between end of reduction pinion gear and surface of transmission case.
- **Measure in at least two places.**

Simpo PDF Merge and Split Unregistered Version - http://www.simpopdf.com

Adjustment 1 (Cont'd)

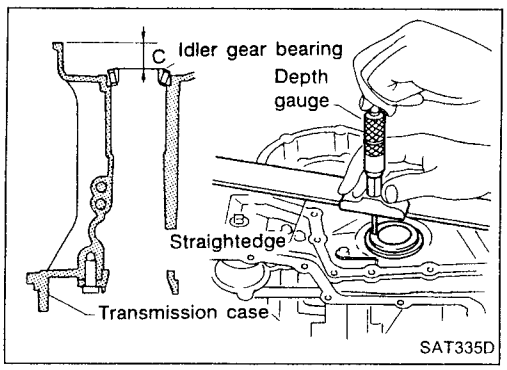

- Measure dimension "C" between surface of idler gear bearing inner race and converter housing fitting surface of transmission case.
- **Measure in at least two places.**

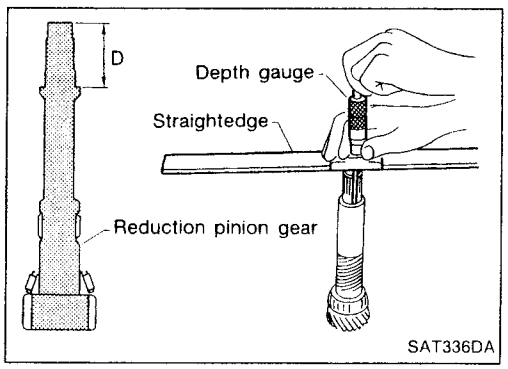

- Measure dimension "D" between end of reduction pinion gear and adjusting shim mating surface of reduction pinion gear.
- **Measure in at least two places.**
- Calculate dimension "A"

  A = D – (B + C)

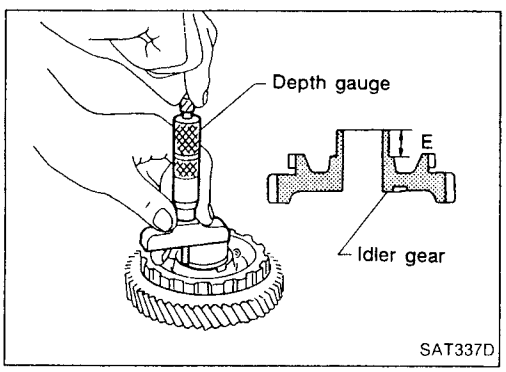

d. Measure dimension "E" between end of idler gear and idler gear bearing of idler gear inner race mating surface.
- **Measure in at least two places.**

AT

e. Calculate "T" and select proper thickness of reduction pinion gear bearing adjusting shim using SDS table as a guide.

   T = A – E

   Reduction pinion gear bearing adjusting shim:
   Refer to SDS, AT-171.

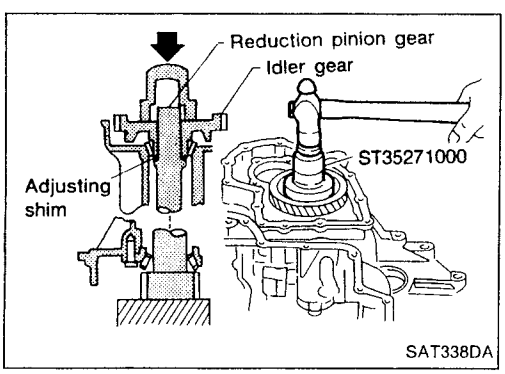

2. Install reduction pinion gear and reduction pinion gear bearing adjusting shim selected in step 2-e on transmission case.
3. Press idler gear bearing inner race on idler gear.
4. Press idler gear on reduction pinion gear.
- **Press idler gear so that idler gear can be locked with parking pawl.**

Simpo PDF Merge and Split Unregistered Version - http://www.simpopdf.com

Adjustment 1 (Cont'd)

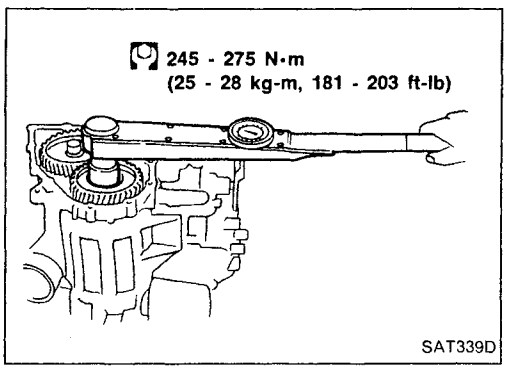

5. Tighten idler gear lock nut to specified torque.
- **Lock idler gear with parking pawl when tightening lock nut.**

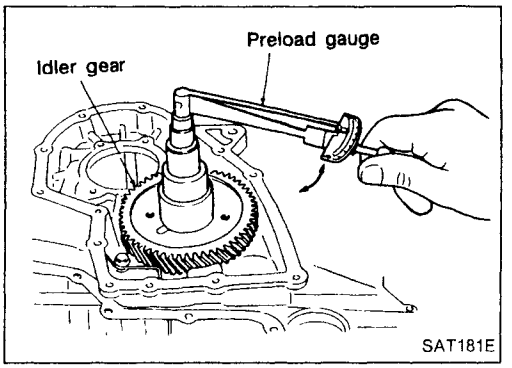

6. Measure reduction pinion gear bearing preload.
- **When measuring bearing preload, turn reduction pinion gear in both directions several times to seat bearing rollers correctly.**
  Reduction pinion gear bearing preload:
  0.11 - 0.69 N·m (1.1 - 7.0 kg-cm, 0.95 - 6.08 in-lb)
- **If not within specified range, readjust bearing preload.**

OUTPUT SHAFT BEARING PRELOAD

— Except model 34X81 —

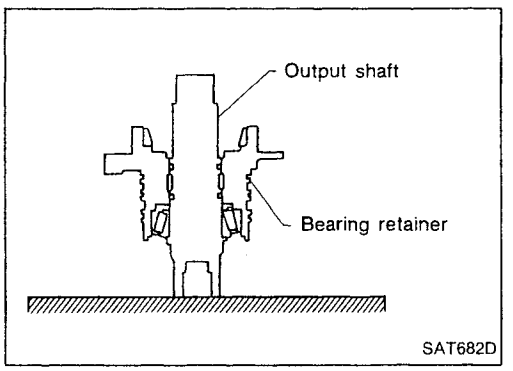

1. Select proper thickness of output shaft bearing adjusting spacer using the following procedures.
a. Remove paper rolled around output shaft.
b. Place bearing retainer on output shaft.

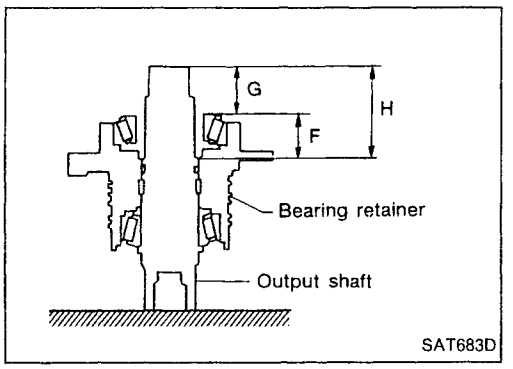

c. Place output gear bearing inner race on bearing retainer.
d. Measure dimensions "G" and "H" and calculate dimension "F".
"F": Distance between the surface of output gear bearing inner race and adjusting shim mating surface of output shaft.
$F = H - G$

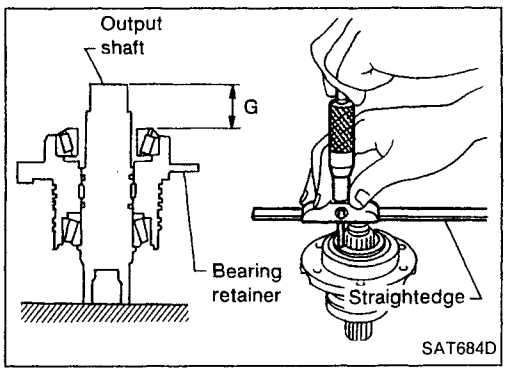

- Measure dimension "G" between end of output shaft and surface of output gear bearing inner race.
- **Measure in at least two places.**

Simpo PDF Merge and Split Unregistered Version - http://www.simpopdf.com

Adjustment 1 (Cont'd)

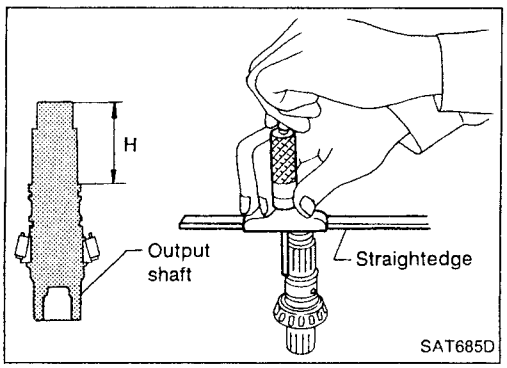

- Measure dimension "H" between end of output shaft and adjusting spacer mating surface of output shaft.
- **Measure in at least two places.**
- Calculate dimension "F".
  F = H – G

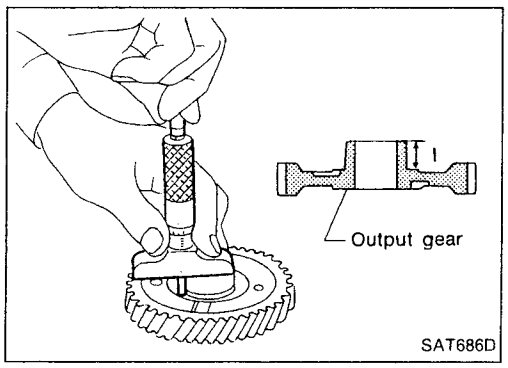

e. Measure distance "I" between end of output gear (adjusting spacer mating surface) and bearing inner race fitting surface.
- **Measure in at least two places.**

f. Calculate dimension "T_2".
   "T_2": Distance between adjusting spacer mating surface of output gear and output shaft
   $T_2 = F – I$

g. Select proper thickness of output shaft bearing adjusting spacer using SDS table as a guide.
   Output shaft bearing adjusting spacer:
   Refer to SDS, AT-172.

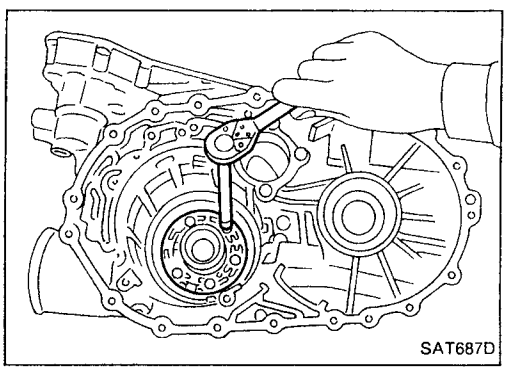

2. Install bearing retainer on transmission case.

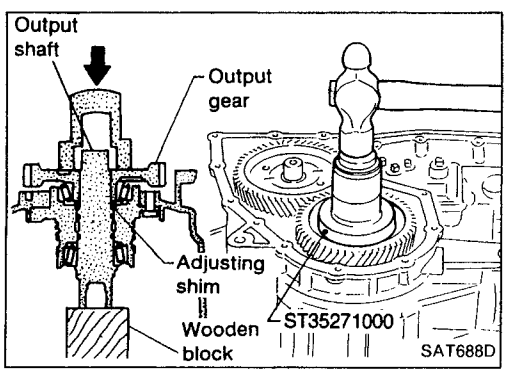

3. Place output shaft on bearing retainer.
4. Place output shaft bearing adjusting spacer selected in step 1-g on output shaft.
5. Press output gear bearing inner race on output gear.
6. Press output gear on output shaft.

AT

Simpo PDF Merge and Split Unregistered Version - http://www.simpopdf.com

Adjustment 1 (Cont'd)

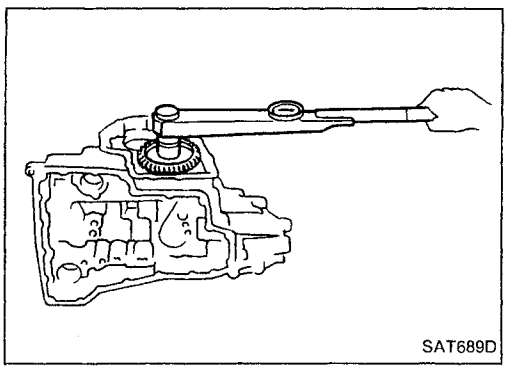
SAT689D

7. Tighten output gear lock nut to specified torque.

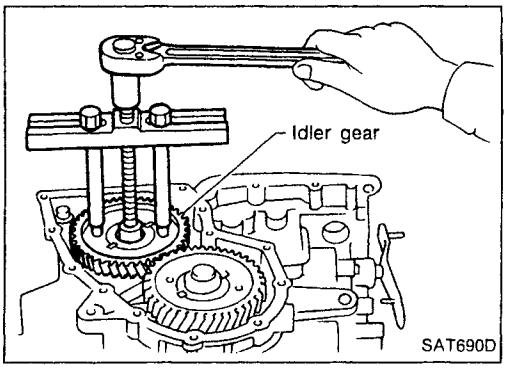

SAT690D

8. Remove idler gear to measure output shaft bearing preload.

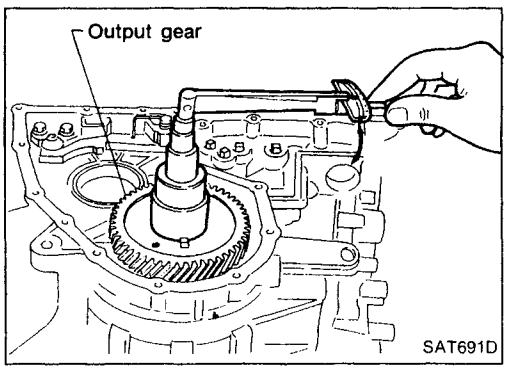

SAT691D

9. Measure output shaft bearing preload.
- **When measuring bearing preload, turn output shaft in both directions several times to seat bearing rollers correctly.**

Output shaft bearing preload:
0.25 - 0.88 N·m
(2.5 - 9.0 kg-cm, 2.2 - 7.8 in-lb)

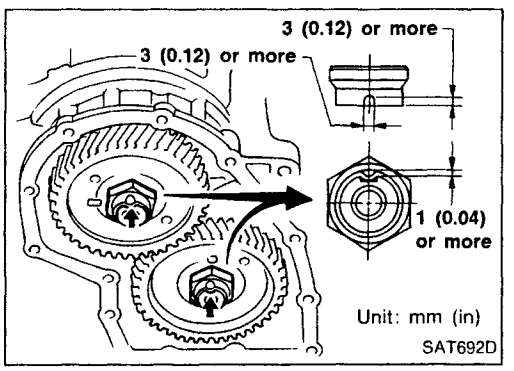

SAT692D

10. Install idler gear and tighten lock nut to specified torque.
11. After properly adjusting "turning" torque, clinch idler gear and output gear lock nuts as shown.

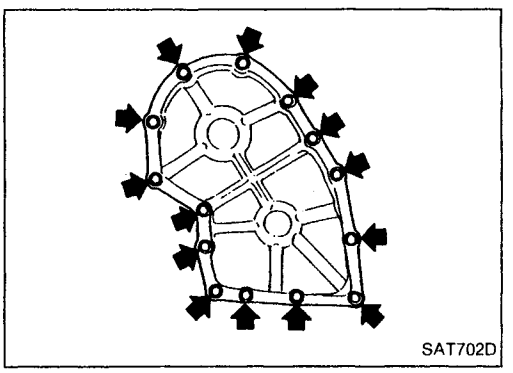
SAT702D

12. Install new gasket and side cover on transmission case.
- **Always replace side cover bolts.**

Simpo PDF Merge and Split Unregistered Version - http://www.simpopdf.com

Adjustment 1 (Cont'd)

OUTPUT SHAFT END PLAY

— Model 34X81 —

- Measure clearance between side cover and the end of the output shaft bearing.
- Select proper thickness of adjusting shim so that clearance is within specifications.

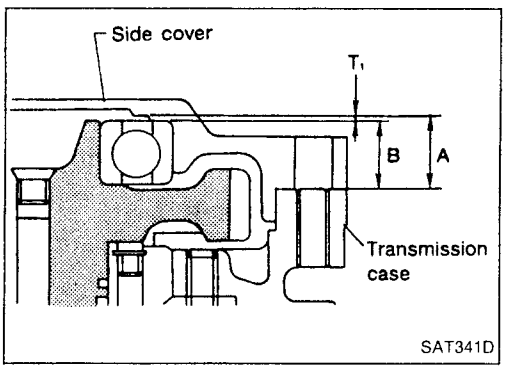

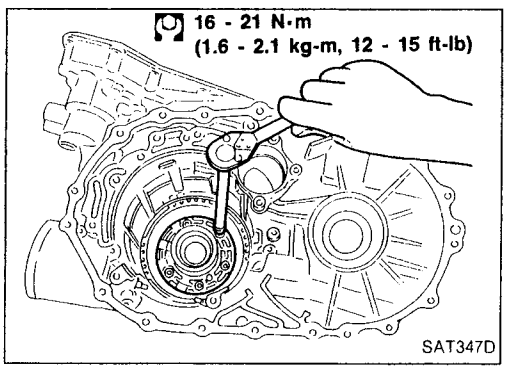

1. Install bearing retainer for output shaft.

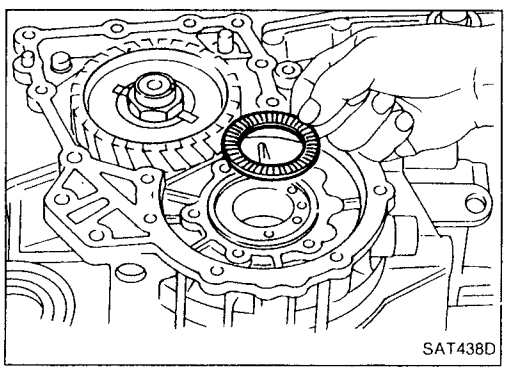

2. Install output shaft thrust needle bearing on bearing retainer.

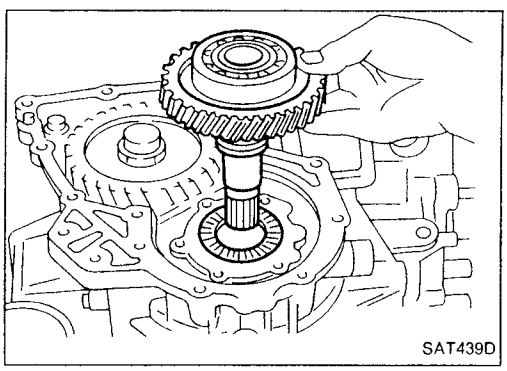

3. Install output shaft on transmission case.

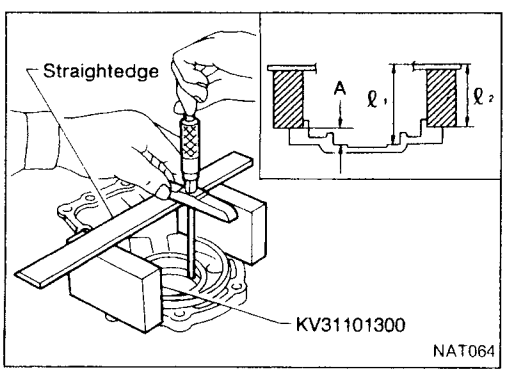

4. Measure dimensions "ℓ_1" and "ℓ_2" at side cover and then calculate dimension "A".

- **Measure dimension "ℓ_1" and "ℓ_2" in at least two places.**
  "A": Distance between transmission case fitting surface and adjusting shim mating surface.
  A = $\ell_1 - \ell_2$ ℓ_2: Height of gauge

AT

Simpo PDF Merge and Split Unregistered Version - http://www.simpopdf.com

Adjustment 1 (Cont'd)

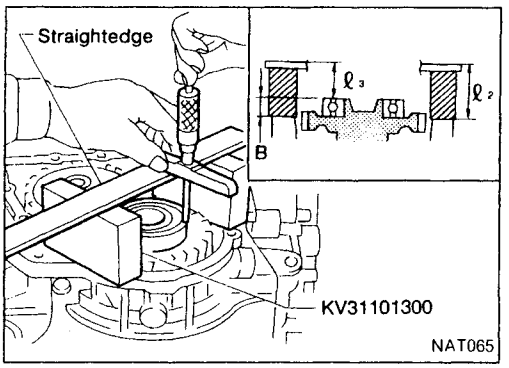

5. Measure dimensions "ℓ_2" and "ℓ_3" and then calculate dimension "B".
- **Measure "ℓ_2" and "ℓ_3" in at least two places.**

"B": Distance between the end of output shaft bearing outer race and the side cover fitting surface of transmission case.

$B = \ell_2 - \ell_3$ ℓ_2: Height of gauge

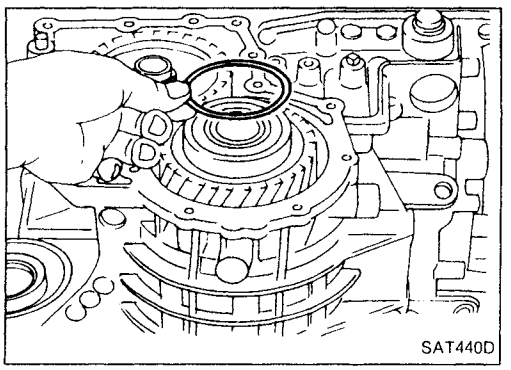

6. Select proper thickness of adjusting shim so that output shaft end play (clearance between side cover and output shaft bearing) is within specifications.

Output shaft end play (A – B):
0 - 0.5 mm (0 - 0.020 in)
Output shaft end play adjusting shim:
Refer to SDS, AT-172.

7. Install adjusting shim on output shaft bearing.

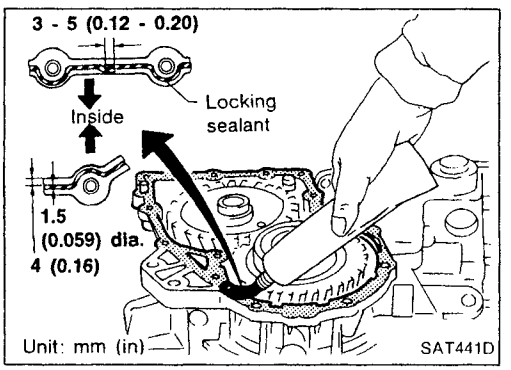

8. Apply locking sealant to transmission case as shown in illustration.

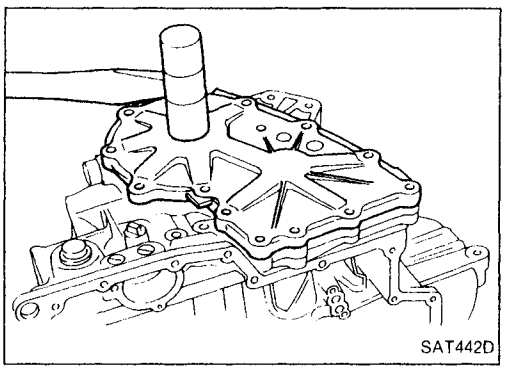

9. Install side cover on transmission case.
- **Apply locking sealant to the mating surface of transmission case.**

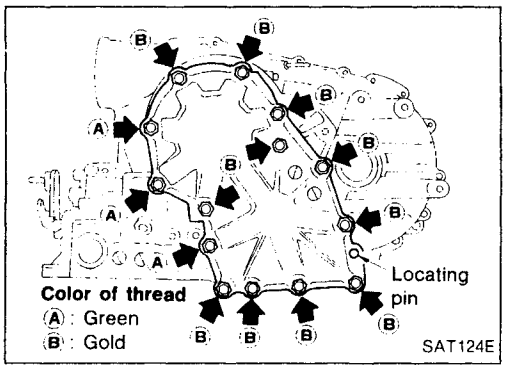

10. Tighten side cover fixing bolts to specified torque.
- **Do not mix bolts Ⓐ and Ⓑ.**
- **Always replace bolts Ⓐ as they are self-sealing bolts.**

Simpo PDF Merge and Split Unregistered Version - http://www.simpopdf.com

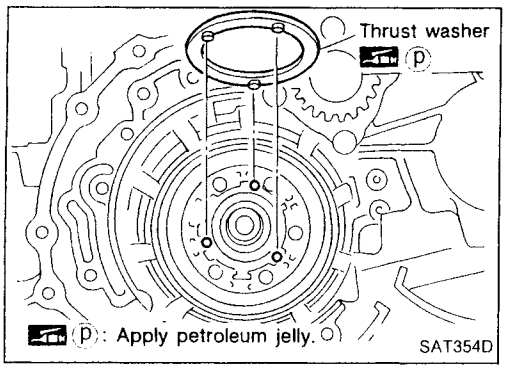

Assembly 2

— All models —

1. Remove paper rolled around bearing retainer.
2. Install thrust washer on bearing retainer.

- **Apply petroleum jelly to thrust washer.**

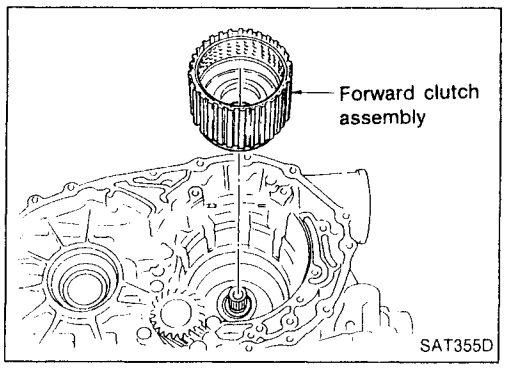

3. Install forward clutch assembly.

- **Align teeth of low & reverse brake drive plates before installing.**
- **Make sure that bearing retainer seal rings are not spread.**

— Except model 34X81 —

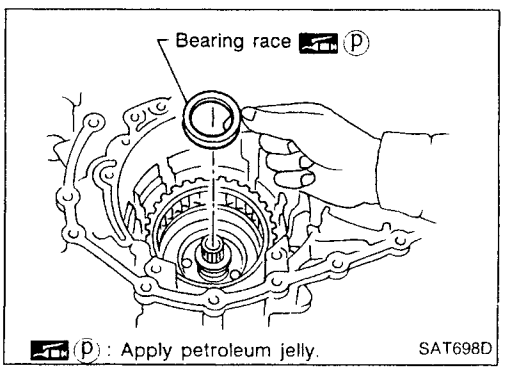

4. Install bearing race on bearing retainer.

- **Apply petroleum jelly to bearing race.**

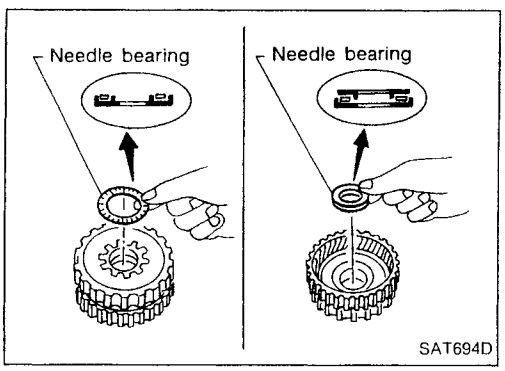

5. Install needle bearings on rear internal gear.

- **Apply petroleum jelly to needle bearings.**
- **Pay attention to direction of needle bearing.**

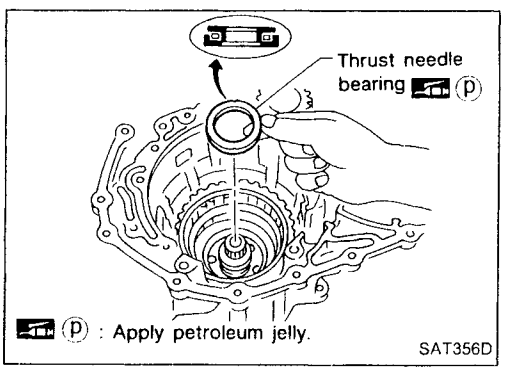

— Model 34X81 —

4. Install thrust needle bearing on bearing retainer.

- **Apply petroleum jelly to thrust bearing.**
- **Pay attention to direction of thrust needle bearing.**

AT

Simpo PDF Merge and Split Unregistered Version - http://www.simpopdf.com

Assembly 2 (Cont'd)

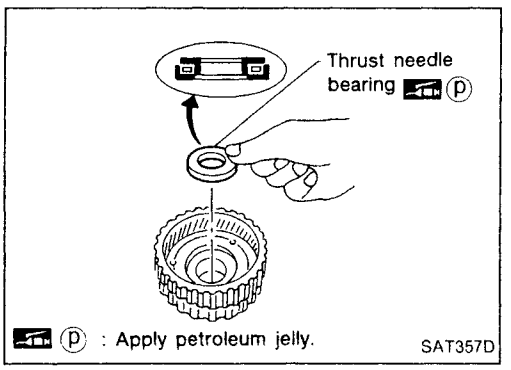

5. Install thrust needle bearing on rear internal gear.
- **Apply petroleum jelly to thrust needle bearing.**
- **Pay attention to direction of thrust needle bearing.**

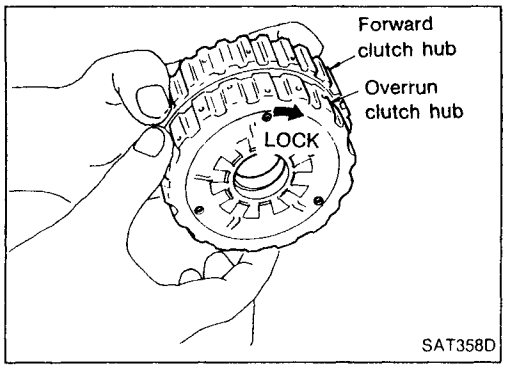

— All models —

6. Hold forward clutch hub and turn overrun clutch hub. Check overrun clutch hub for directions of lock and unlock.
- If not as shown in illustration, check installed direction of forward one-way clutch.

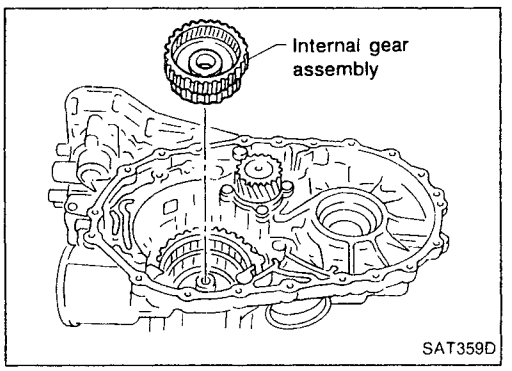

7. Install rear internal gear assembly.
- **Align teeth of forward clutch and overrun clutch drive plate.**

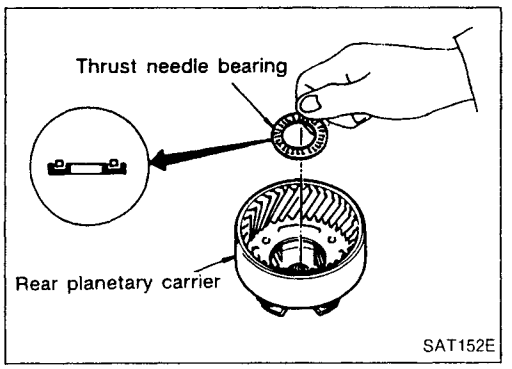

8. Install needle bearing on rear planetary carrier.
- **Apply petroleum jelly to needle bearing.**
- **Pay attention to direction of needle bearing.**

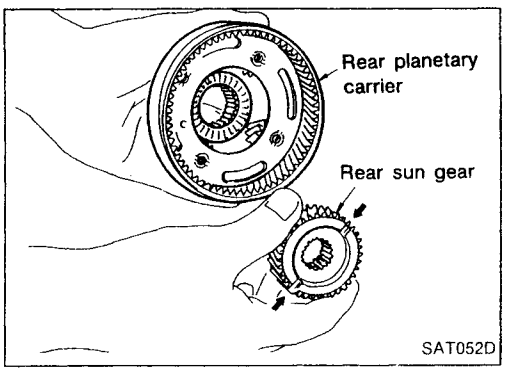

9. Install rear sun gear on rear planetary carrier.
- **Pay attention to direction of rear sun gear.**

Simpo PDF Merge and Split Unregistered Version - http://www.simpopdf.com

Assembly 2 (Cont'd)

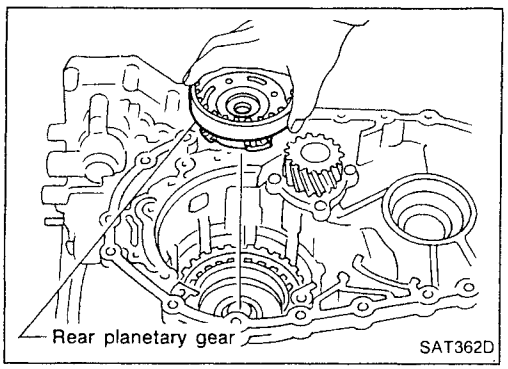

10. Install rear planetary carrier on transmission case.

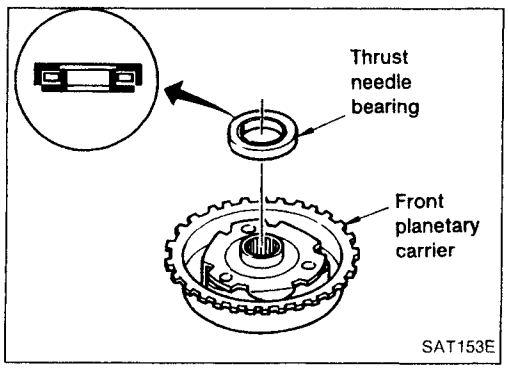

11. Install thrust needle bearing on front planetary carrier.
- **Apply petroleum jelly to thrust needle bearing.**
- **Pay attention to direction of thrust needle bearing.**

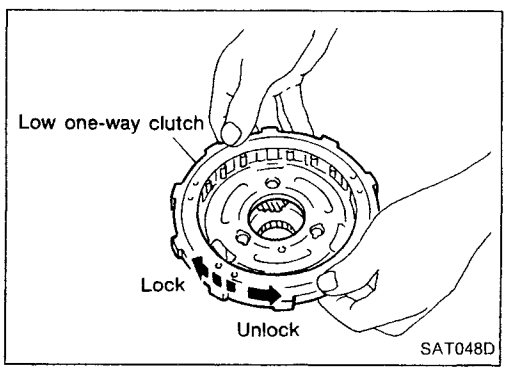

12. Install low one-way clutch to front planetary carrier by turning it in the direction of the arrow as shown.
13. While holding front planetary carrier, turn low one-way clutch.
    Check low one-way clutch for correct directions of lock and unlock.

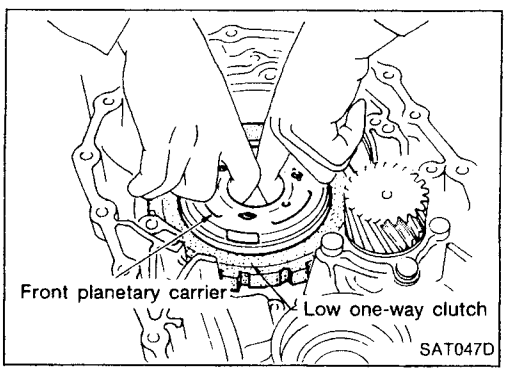

14. Install front planetary carrier assembly on transmission case.

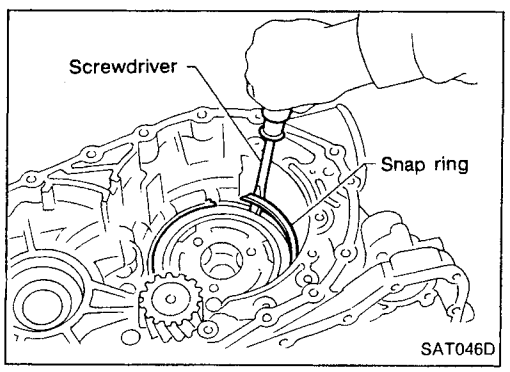

15. Install snap ring with screwdriver.
- **Forward clutch and bearings must be correctly installed for snap ring to fit groove of transmission case.**

AT

Simpo PDF Merge and Split Unregistered Version - http://www.simpopdf.com

Assembly 2 (Cont'd)

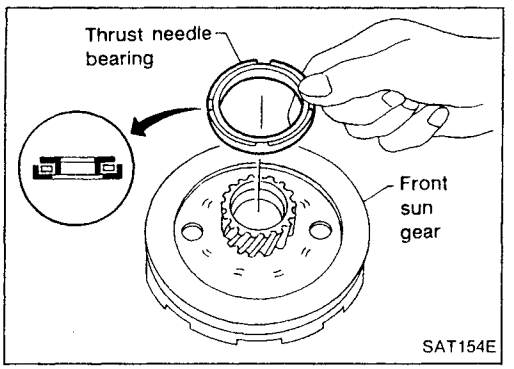

16. Install needle bearing on front sun gear.
- **Apply petroleum jelly to needle bearing.**
- **Pay attention to direction of needle bearing.**

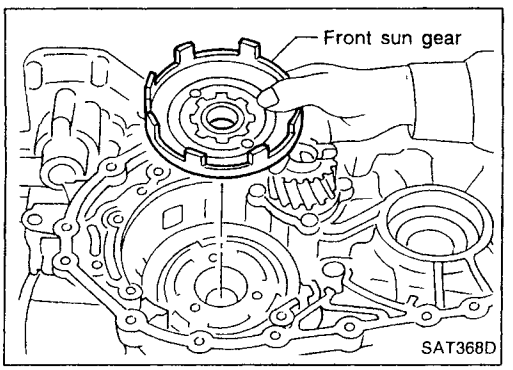

17. Install front sun gear on front planetary carrier.

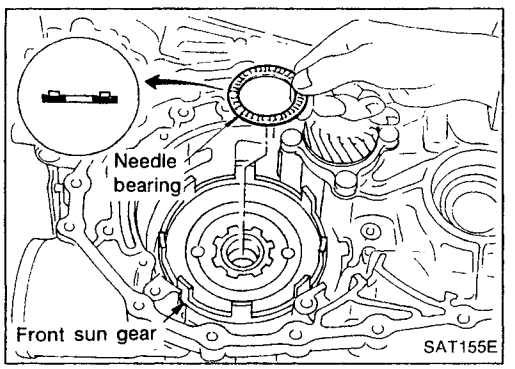

18. Install needle bearing on front sun gear.
- **Apply petroleum jelly to needle bearing.**
- **Pay attention to direction of needle bearing.**

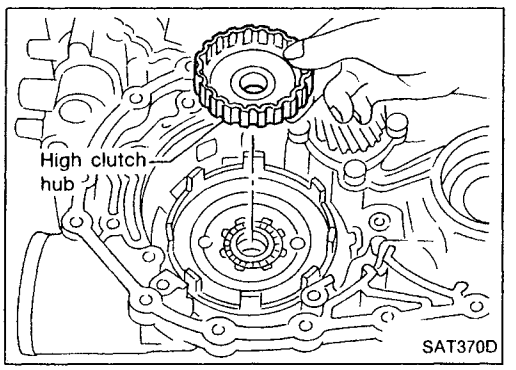

19. Install high clutch hub on front sun gear.

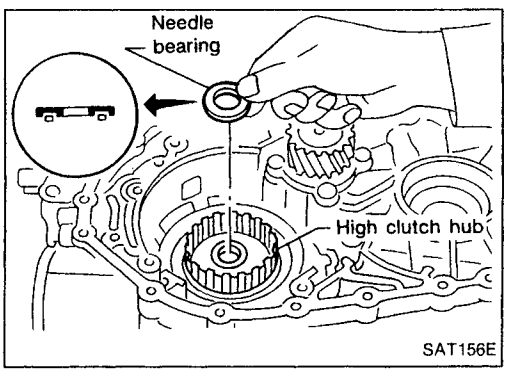

20. Install needle bearing on high clutch hub.
- **Apply petroleum jelly to needle bearing.**
- **Pay attention to direction of needle bearing.**

Simpo PDF Merge and Split Unregistered Version - http://www.simpopdf.com

Assembly 2 (Cont'd)

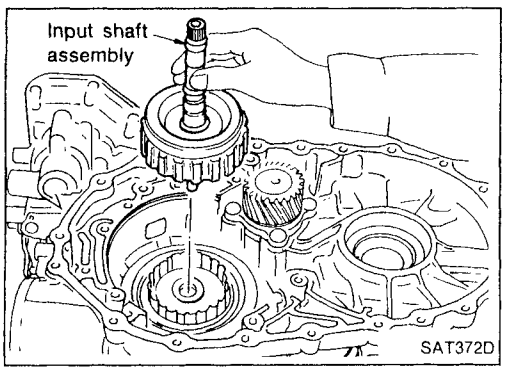

21. Remove paper rolled around input shaft.
22. Install input shaft assembly.
- **Align teeth of high clutch drive plates before installing.**

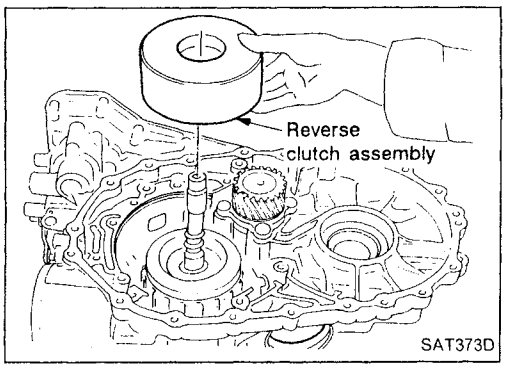

23. Install reverse clutch assembly.
- **Align teeth of reverse clutch drive plates before installing.**

Adjustment 2

When any parts listed below are replaced, adjust total end play and reverse clutch end play.

Item / Part name	Total end play	Reverse clutch end play
Transmission case	●	●
Overrun clutch hub	●	●
Rear internal gear	●	●
Rear planetary carrier	●	●
Rear sun gear	●	●
Front planetary carrier	●	●
Front sun gear	●	●
High clutch hub	●	●
High clutch drum	●	●
Oil pump cover	●	●
Reverse clutch drum	—	●

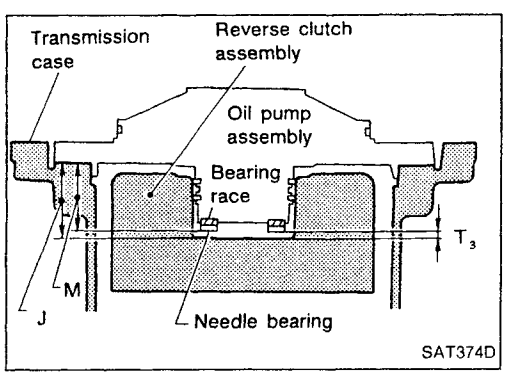

TOTAL END PLAY

- Measure clearance between reverse clutch drum and needle bearing for oil pump cover.
- Select proper thickness of bearing race so that end play is within specifications.

Simpo PDF Merge and Split Unregistered Version - http://www.simpopdf.com

Adjustment 2 (Cont'd)

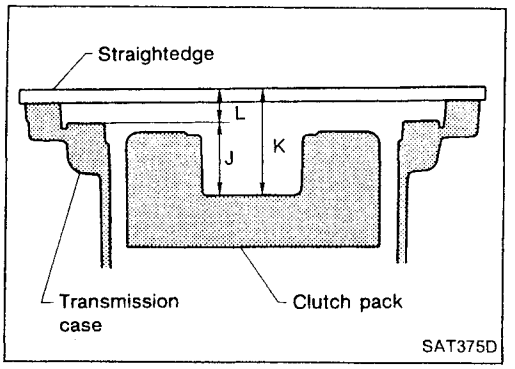

1. Measure dimensions "K" and "L" and then calculate dimension "J".

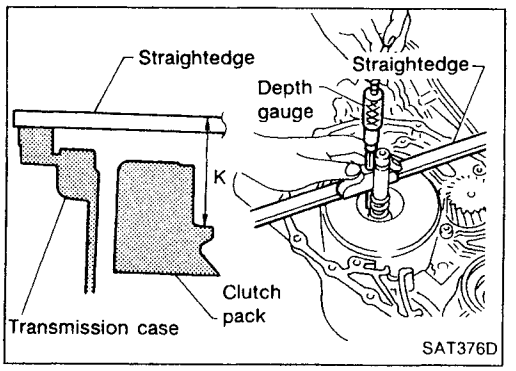

a. Measure dimension "K".

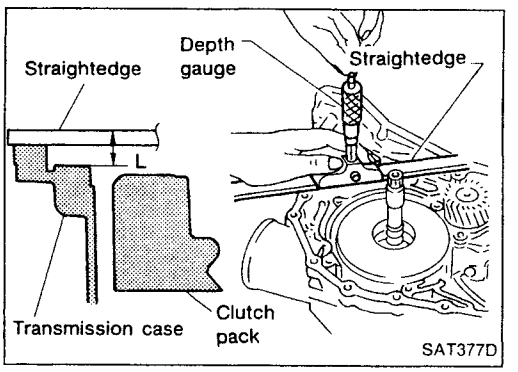

b. Measure dimension "L".
c. Calculate dimension "J".

- **"J": Distance between oil pump fitting surface of transmission case and needle bearing mating surface of high clutch drum.**

  J = K – L

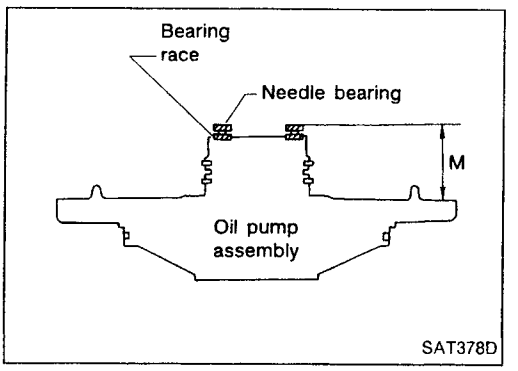

2. Measure dimension "M".
a. Place bearing race and needle bearing on oil pump assembly.

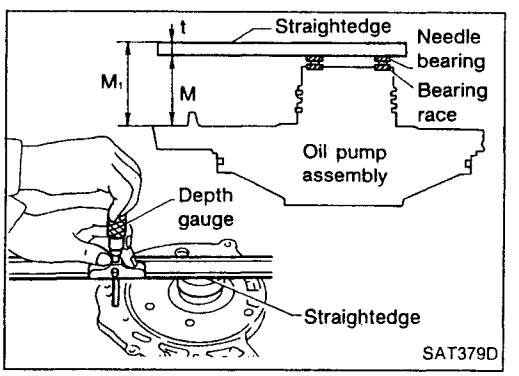

b. Measure dimension "M".

- **"M": Distance between transmission case fitting surface and needle bearing on oil pump cover.**
- **M_1: Indication of gauge.**

Simpo PDF Merge and Split Unregistered Version - http://www.simpopdf.com

Adjustment 2 (Cont'd)

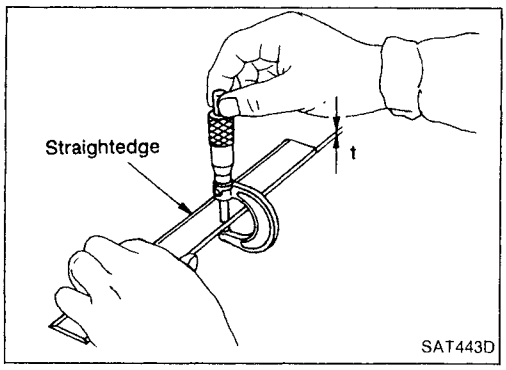

c. Measure thickness of straightedge "t".
   $M = M_1 - t$

3. Adjust total end play "T_3".
   $T_3 = J - M$
   Total end play "T_3":
   0.25 - 0.55 mm (0.0098 - 0.0217 in)

- Select proper thickness of bearing race so that total end play is within specifications.
  Bearing races:
  Refer to SDS, AT-173.

AT

REVERSE CLUTCH END PLAY

- Measure clearance between oil pump cover and thrust washer for reverse clutch drum.
- Select proper thickness of thrust washer so that end play is within specifications.

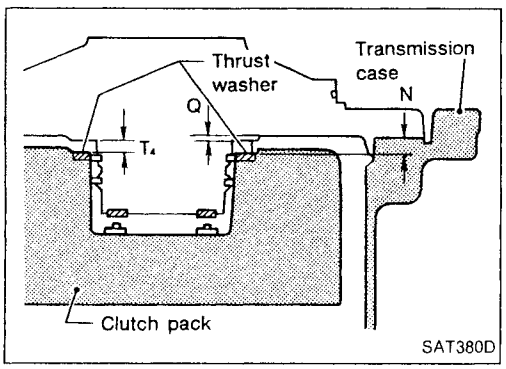

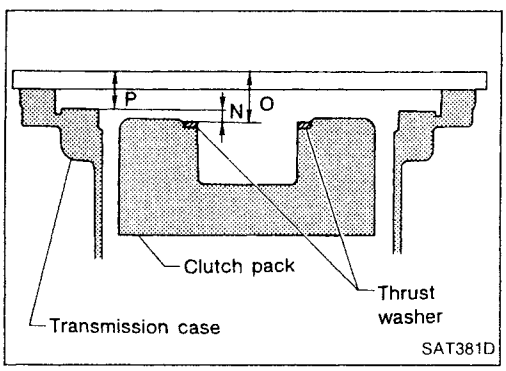

1. Measure dimensions "O" and "P" and then calculate dimension "N".

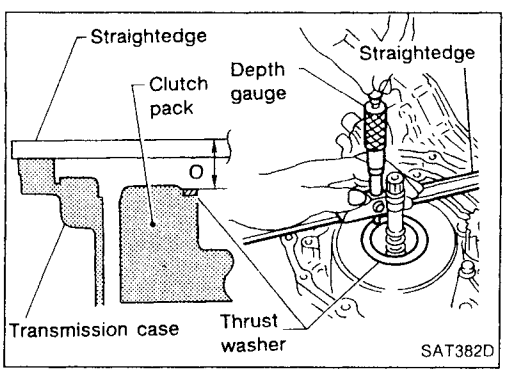

a. Place thrust washer on reverse clutch drum.
b. Measure dimension "O".

Simpo PDF Merge and Split Unregistered Version - http://www.simpopdf.com

Adjustment 2 (Cont'd)

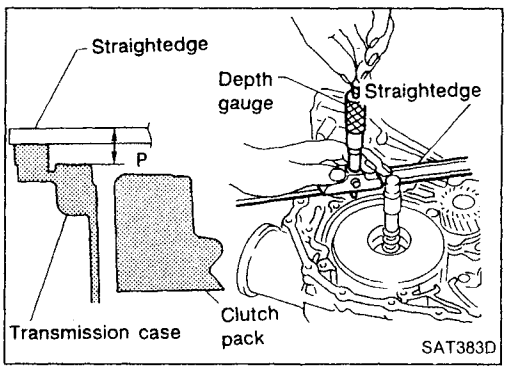

c. Measure dimension "P".
d. Calculate dimension "N".

- **"N": Distance between oil pump fitting surface of transmission case and thrust washer on reverse clutch drum.**
  N = O – P

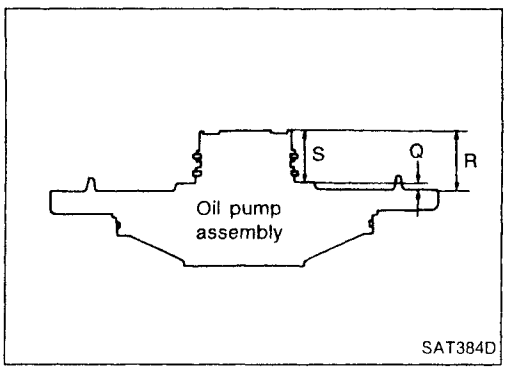

2. Measure dimensions "R" and "S" and then calculate dimension "Q".

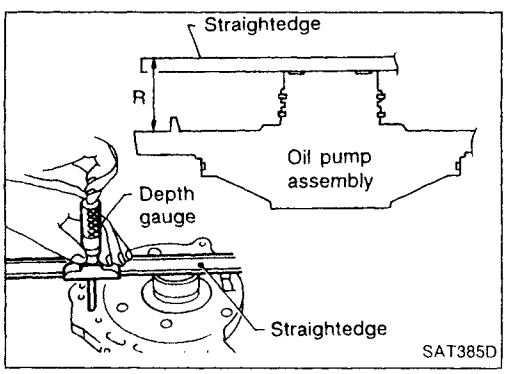

a. Measure dimension "R".

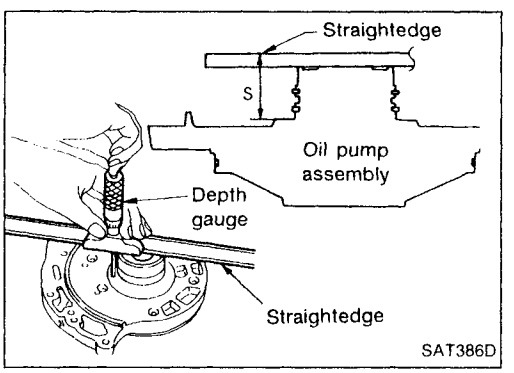

b. Measure dimension "S".
c. Calculate dimension "Q".

- **"Q": Distance between transmission case fitting surface and thrust washer mating surface.**
  Q = R – S

3. Adjust reverse clutch end play "T_4".
   T_4 = N – Q
   Reverse clutch end play:
   0.65 - 1.00 mm (0.0256 - 0.0394 in)

- Select proper thickness of thrust washer so that reverse clutch end play is within specifications.
  Thrust washer:
  Refer to SDS, AT-173.

Simpo PDF Merge and Split Unregistered Version - http://www.simpopdf.com

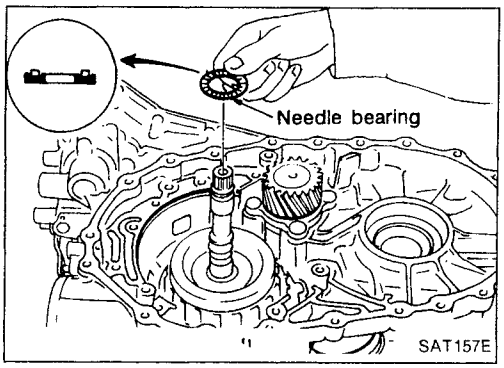

Assembly 3

1. Remove reverse clutch assembly and install needle bearing on high clutch assembly.
- **Pay attention to direction of needle bearing.**
2. Install reverse clutch assembly.

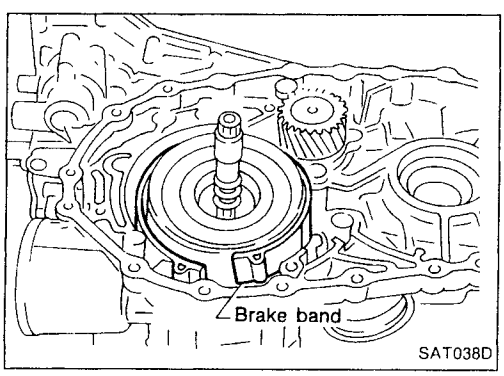

3. Install anchor end pin, washer and lock nut on transmission case.
4. Place brake band on outside of reverse clutch drum. Tighten anchor end pin just enough so brake band is evenly fitted on reverse clutch drum.

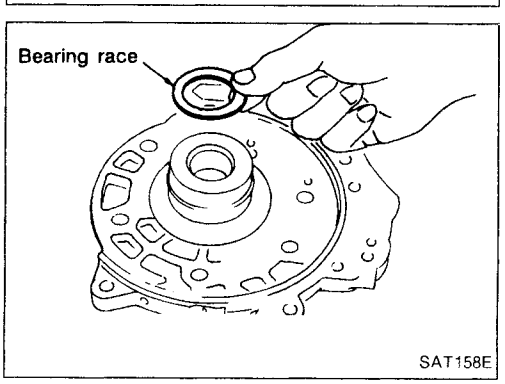

5. Place bearing race selected in total end play adjustment step on oil pump cover.
- **Apply petroleum jelly to bearing race.**

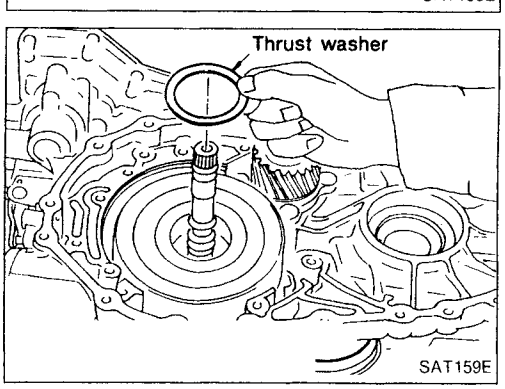

6. Place thrust washer selected in reverse clutch end play step on reverse clutch drum.
- **Apply petroleum jelly to thrust washer.**

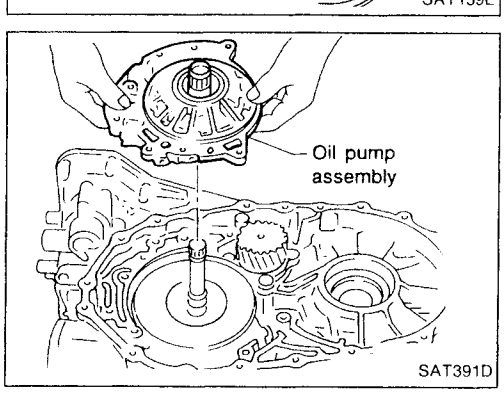

7. Install oil pump assembly on transmission case.

Simpo PDF Merge and Split Unregistered Version - http://www.simpopdf.com

Assembly 3 (Cont'd)

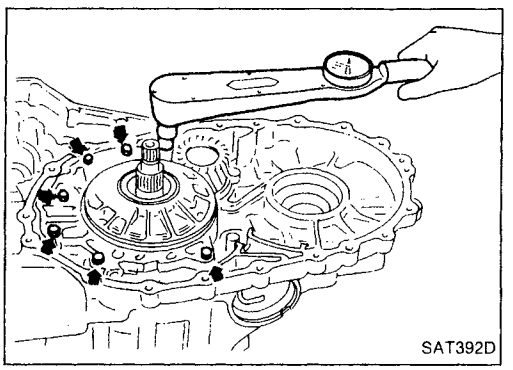

8. Tighten oil pump fixing bolts to specified torque.

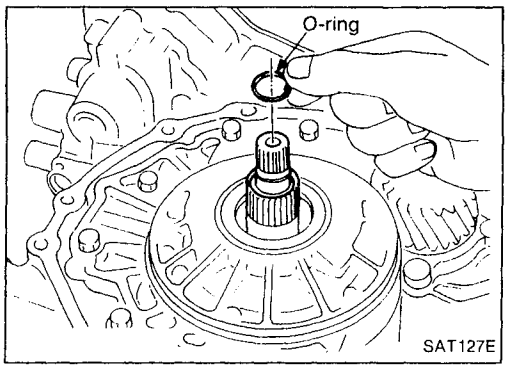

9. Install O-ring to input shaft.
- **Apply ATF to O-ring.**

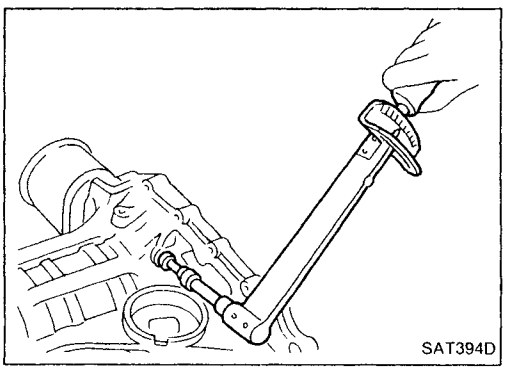

10. Adjust brake band.
a. Tighten anchor end pin to specified torque.
Anchor end pin:
: 3.9 - 5.9 N·m (0.4 - 0.6 kg-m, 35 - 52 in-lb)

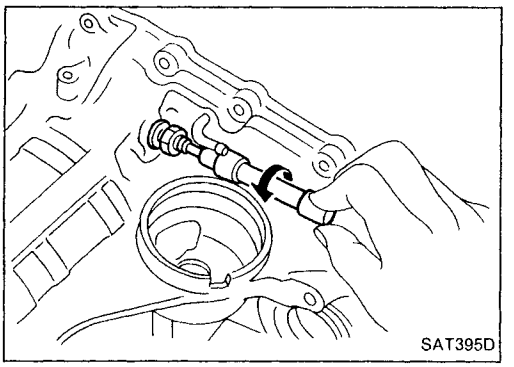

b. Back off anchor end pin two and a half turns.

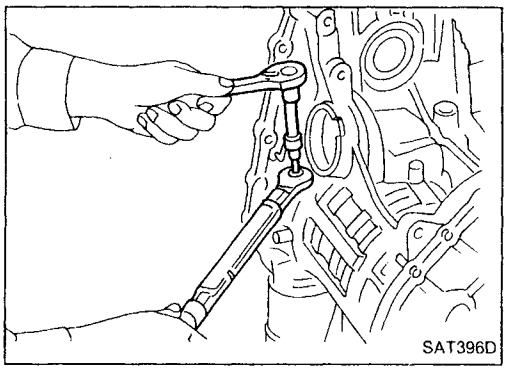

c. While holding anchor end pin, tighten lock nut.

Simpo PDF Merge and Split Unregistered Version - http://www.simpopdf.com

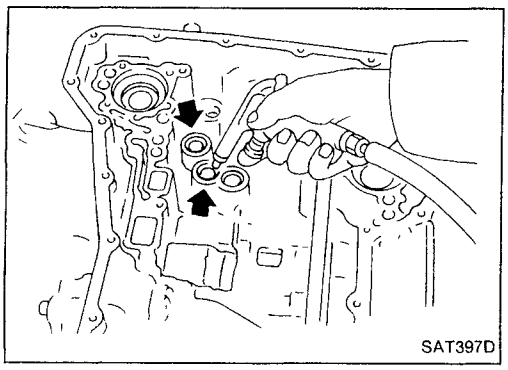
SAT397D

11. Apply compressed air to oil holes of transmission case and check operation of brake band.

Adjustment 3

FINAL DRIVE END PLAY

— Except model 34X81 —

- Measure clearance between differential side bearing and transmission case.
- Select proper thickness of adjusting shim so that end play is within specifications.

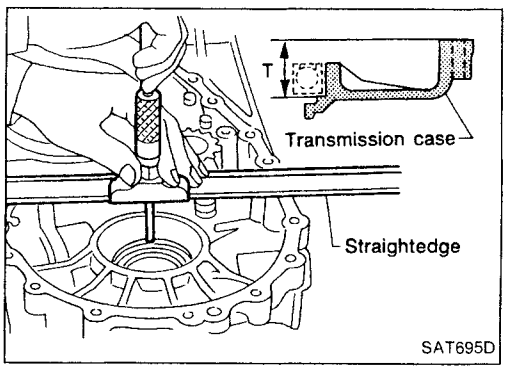

SAT695D

1. Measure dimension "T" between side bearing fitting surface of transmission case and converter housing fitting surface of transmission case.
   "T_1": indication of gauge

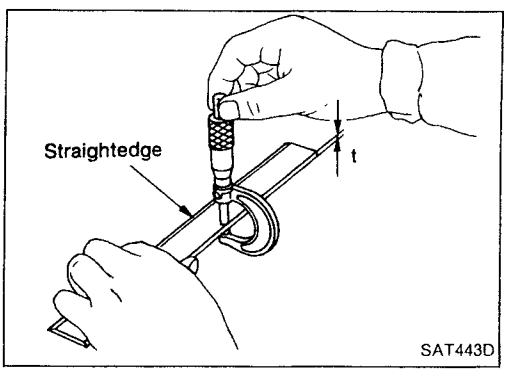

SAT443D

2. Measure thickness of straightedge "t".
   $T = T_1 - t$

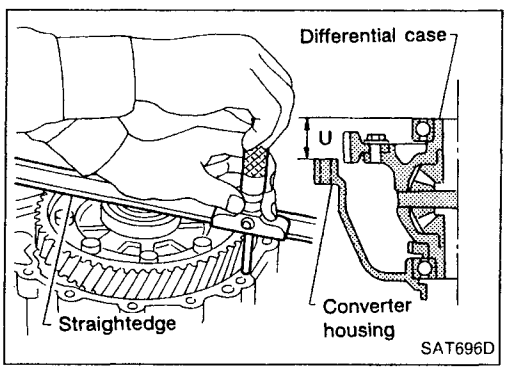

SAT696D

3. Place final drive assembly on converter housing.
4. Measure dimension "U" between end of differential case and transmission case fitting surface of converter housing.

AT

Simpo PDF Merge and Split Unregistered Version - http://www.simpopdf.com

Adjustment 3 (Cont'd)

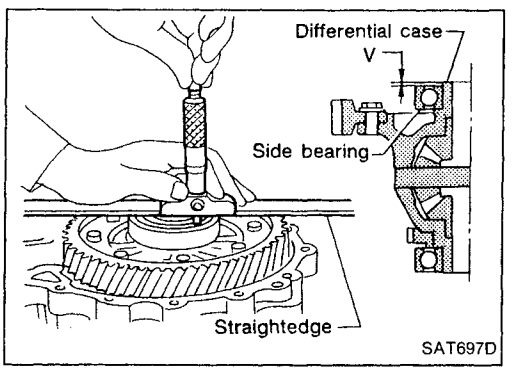

5. Measure dimension "V" between end of differential case and adjusting shim mating surface of differential side bearing.
6. Calculate final drive end play.
   Final drive end play:
   T – U + V
7. Select proper thickness of differential side bearing adjusting shim so that final drive end play is within specifications.
   Final drive end play:
   0 - 0.15 mm (0 - 0.0059 in)
   Differential side bearing adjusting shim:
   Refer to SDS, AT-170.

Assembly 4

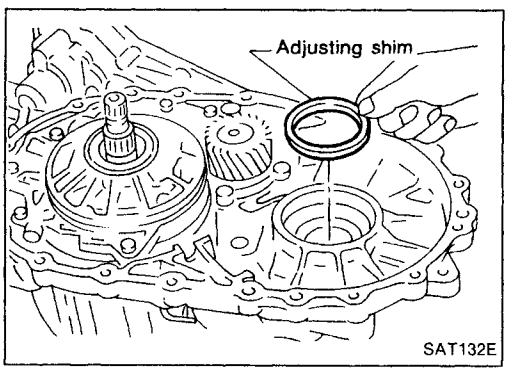

1. Install differential side bearing adjusting shim selected in final drive end play adjustment step on transmission case.

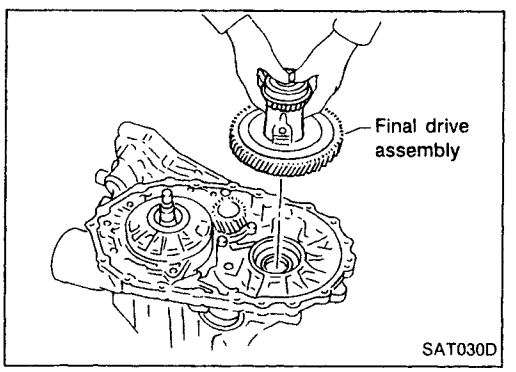

2. Install final drive assembly on transmission case.

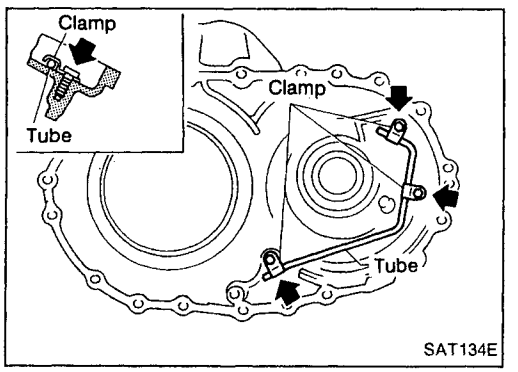

3. Install oil tube on converter housing.

Simpo PDF Merge and Split Unregistered Version - http://www.simpopdf.com

Assembly 4 (Cont'd)

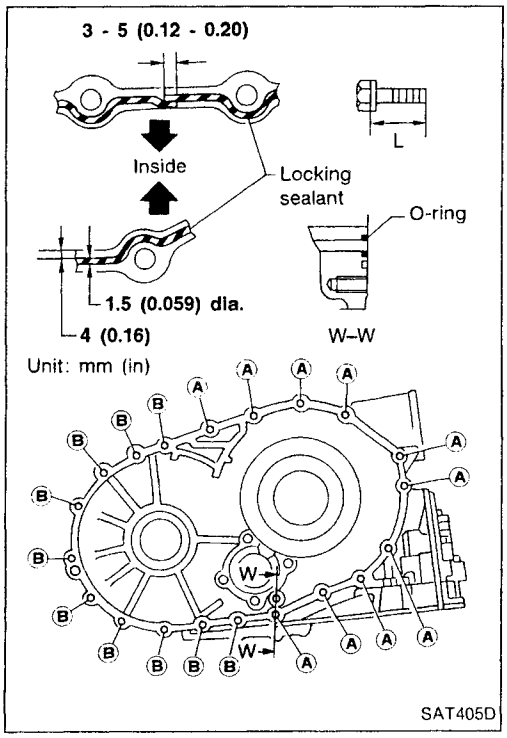

4. Install O-ring on differential oil port of transmission case.
5. Install converter housing on transmission case.

- **Apply locking sealant to mating surface of converter housing.**

Bolt	Length mm (in)
Ⓐ	32.8 (1.291)
Ⓑ	40 (1.57)

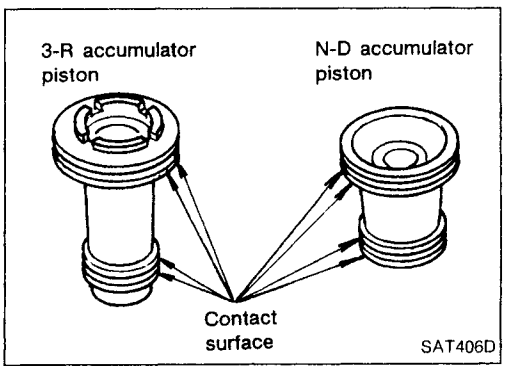

6. Install accumulator piston.

a. Check contact surface of accumulator piston for damage.

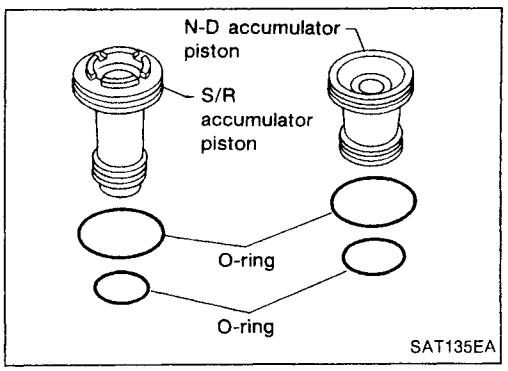

b. Install O-rings on accumulator piston.

- Apply ATF to O-rings.

Accumulator piston O-rings:

Unit: mm (in)

Accumulator	Inner diameter (Small)	Inner diameter (Large)
S/R accumulator	26.9 (1.059)	44.2 (1.740)
N-D accumulator	34.6 (1.362)	39.4 (1.551)

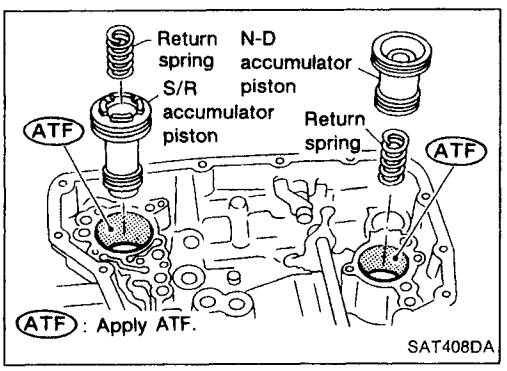

c. Install accumulator pistons and return springs on transmission case.

- **Apply ATF to inner surface of transmission case.**

Return springs:

Unit: mm (in)

Spring	Free length	Outer diameter
S/R accumulator spring	56.4 (2.220)	21.0 (0.827)
N-D accumulator spring	43.5 (1.713)	28.0 (1.102)

AT

Simpo PDF Merge and Split Unregistered Version - http://www.simpopdf.com

Assembly 4 (Cont'd)

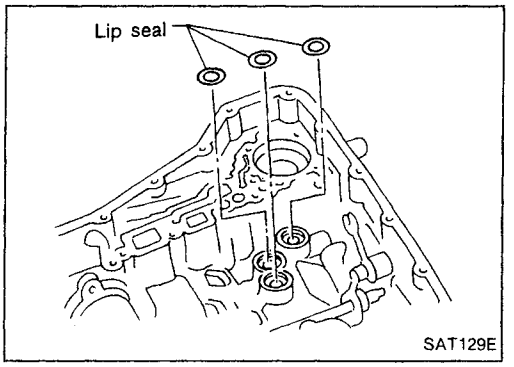

7. Install lip seals for band servo oil holes on transmission case.
- **Apply petroleum jelly to lip seals.**

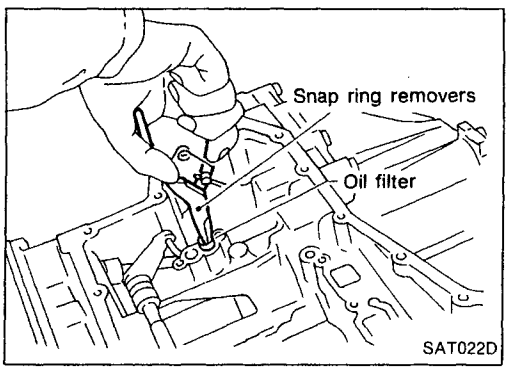

8. Install oil filter for governor valve.
- **Take care with its direction.**

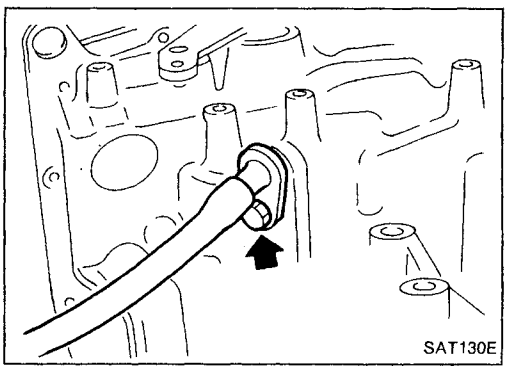

9. Install throttle wire to transmission case.

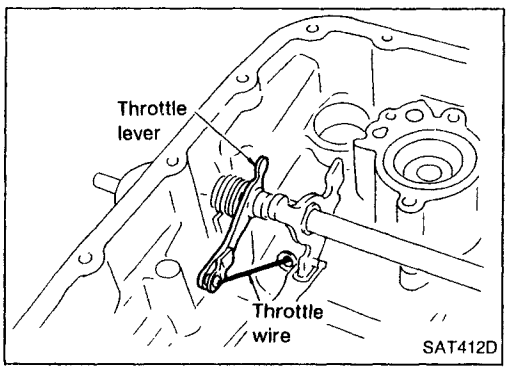

10. Install throttle wire to throttle lever.

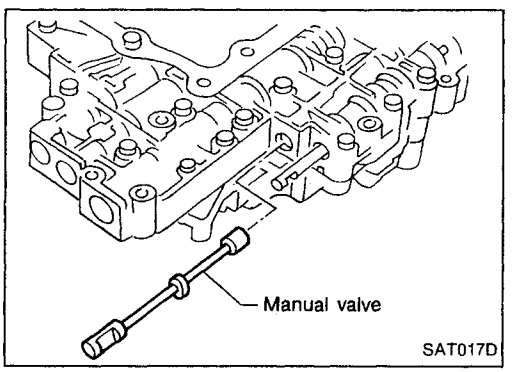

11. Install control valve assembly.
a. Insert manual valve into control valve assembly.
- **Apply ATF to manual valve.**

Simpo PDF Merge and Split Unregistered Version - http://www.simpopdf.com

Assembly 4 (Cont'd)

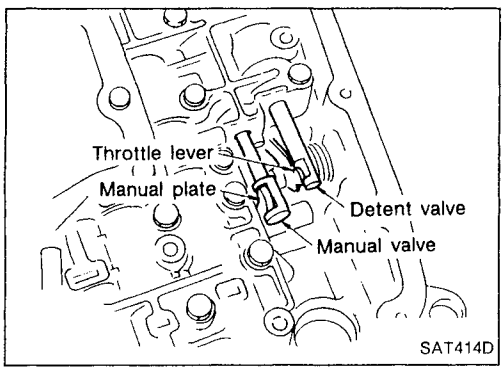

b. Set manual shaft in Neutral position.
c. Install control valve assembly on transmission case while aligning manual valve with manual plate and detent valve with throttle lever.

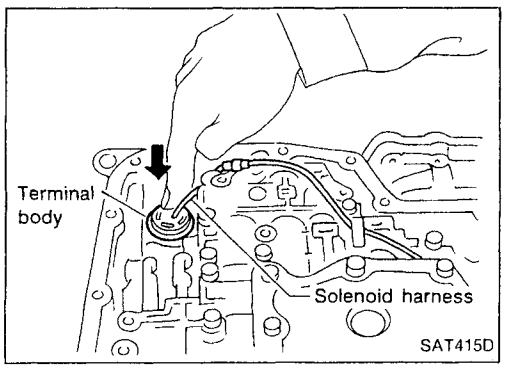

d. Pass solenoid harness through transmission case and install terminal body on transmission case by pushing it.
e. Install clip to terminal body.

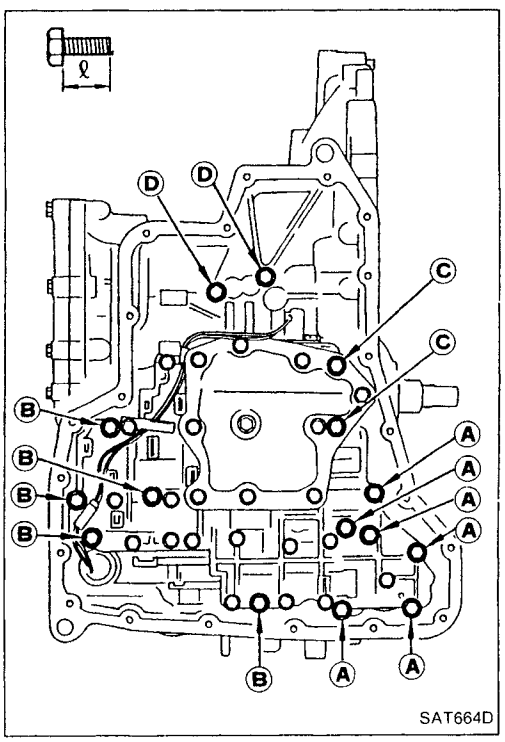

f. Tighten bolts Ⓐ, Ⓑ, Ⓒ and Ⓓ.

Bolt length, number and location:

Bolt	Ⓐ	Ⓑ	Ⓒ	Ⓓ
Bolt length "ℓ" mm (in)	33.0 (1.299)	40.0 (1.575)	43.5 (1.713)	25.0 (0.984)
Number of bolts	6	5	2	2
Tightening torque N·m (kg-m, in-lb)	7 - 9 (0.7 - 0.9, 61 - 78)			

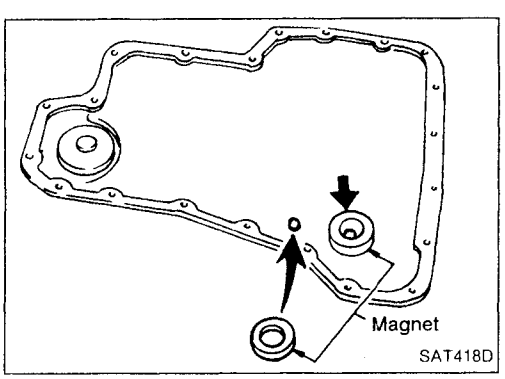

12. Install oil pan.
a. Attach magnet to oil pan.

Simpo PDF Merge and Split Unregistered Version - http://www.simpopdf.com

Assembly 4 (Cont'd)

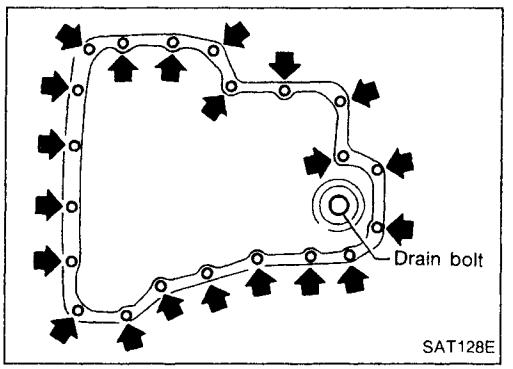

b. Install new oil pan gasket on transmission case.
c. Install oil pan on transmission case.
- **Always replace oil pan bolts.**
- **Tighten the four bolts in a criss-cross pattern to prevent dislocation of gasket.**

d. Tighten drain plug to specified torque.

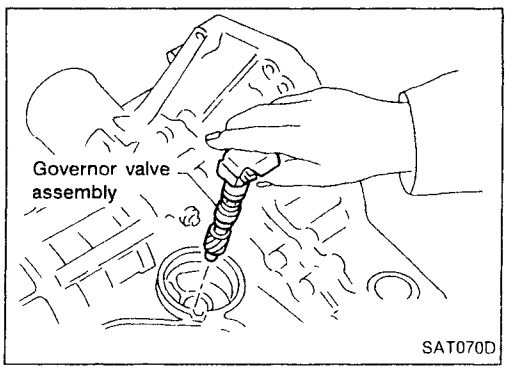

13. Install governor valve.
a. Install governor valve assembly into transmission case.

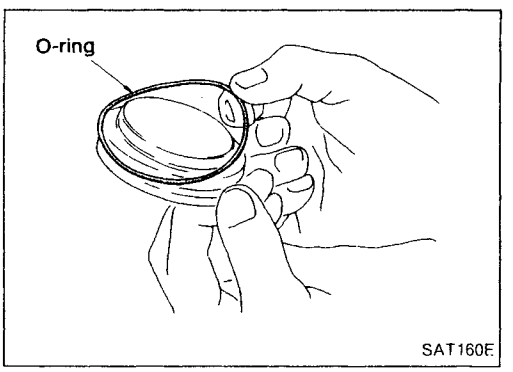

b. Install O-ring to governor cap.
- **Apply ATF to O-ring.**

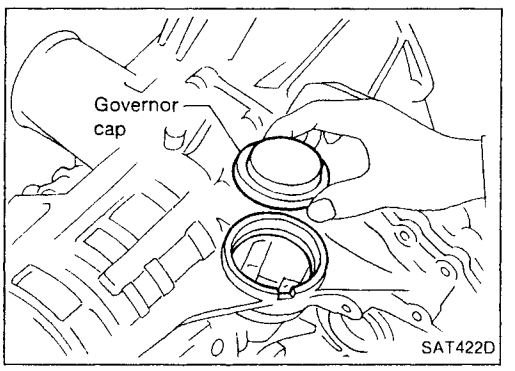

c. Install governor cap onto transmission case.

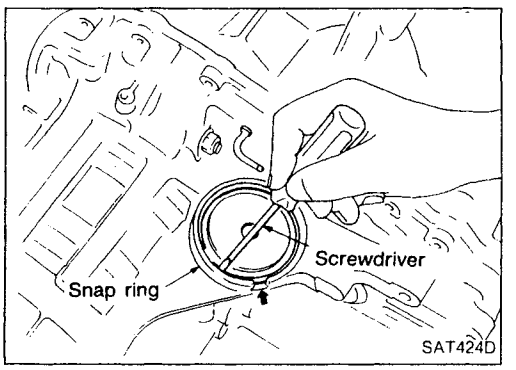

d. Install snap ring onto transmission case with a screwdriver.
- **Align snap ring gap with the notch of transmission case.**

Simpo PDF Merge and Split Unregistered Version - http://www.simpopdf.com

Assembly 4 (Cont'd)

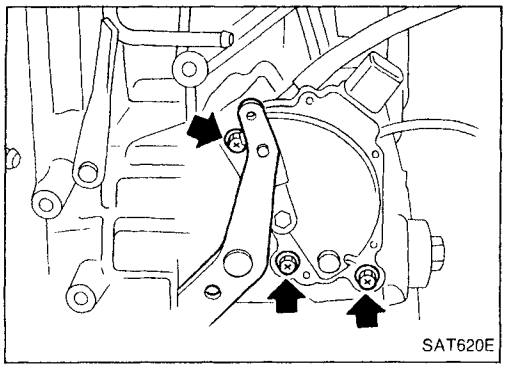

14. Install inhibitor switch.
a. Set manual shaft in "P" position.
b. Temporarily install inhibitor switch on manual shaft.
c. Move selector lever to "N" position.

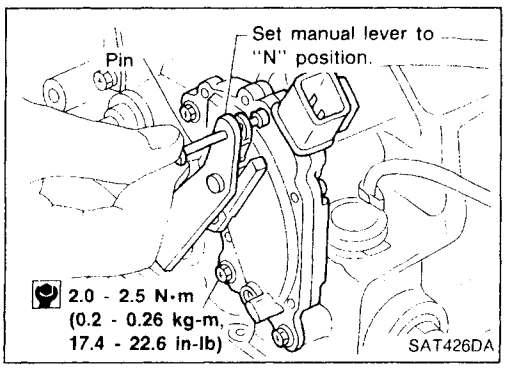

d. Use a 4 mm (0.157 in) pin for this adjustment.
1) Insert the pin straight into the manual shaft adjustment hole.
2) Rotate inhibitor switch until the pin can also be inserted straight into hole in inhibitor switch.
e. Tighten inhibitor switch fixing bolts.
f. Remove pin from adjustment hole after adjusting inhibitor switch.

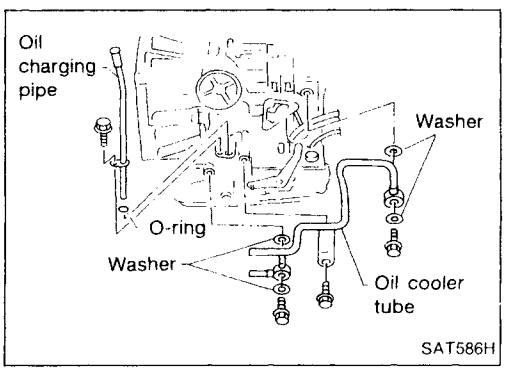

15. Install oil charging pipe and oil cooler tube to transmission case.

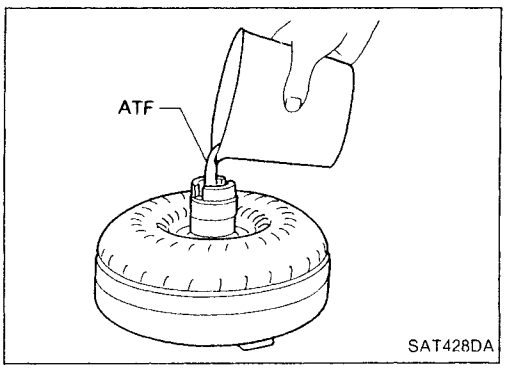

16. Install torque converter.
a. Pour ATF into torque converter.
- **Approximately 1 liter (7/8 Imp qt) of fluid is required for a new torque converter.**
- **When reusing old torque converter, add the same amount of fluid as was drained.**

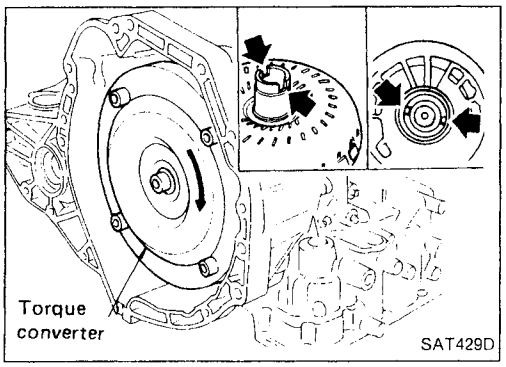

b. Install torque converter while aligning notches of torque converter with notches of oil pump.

Simpo PDF Merge and Split Unregistered Version - http://www.simpopdf.com

Assembly 4 (Cont'd)

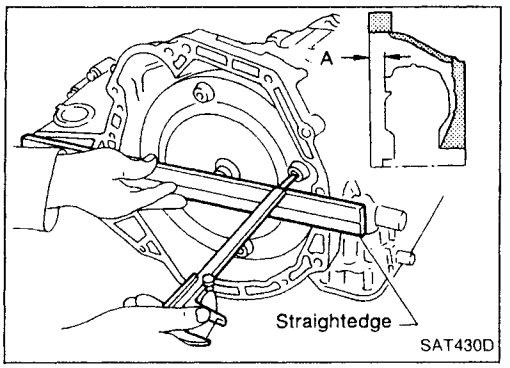

c. Measure distance "A" to check that torque converter is in proper position.

Distance "A":

Except model 34X81

21.1 mm (0.831 in) or more

Model 34X81

15.9 mm (0.626 in) or more

Simpo PDF Merge and Split Unregistered Version - http://www.simpopdf.com

General Specifications

Applied model	Except Europe and Australia	Europe	Except Europe and Australia	Australia	Australia
	GA15DE	GA16DE			SR20DE
	With catalyzer		Without catalyzer		
Automatic transaxle model	RL4F03A				
Automatic transaxle assembly Model code number	34X69	34X68	34X70	34X80	34X81
Transaxle gear ratio					
1st	2.861	2.8611	2.861		
2nd	1.562	1.5622	1.562		
3rd	1.000	1.0000	1.000		
4th	0.697	0.6979	0.697		
Reverse	2.310	2.3103	2.310		
Final drive	3.827	4.0721	3.827		
Recommended oil	Genuine Nissan ATF or equivalent				
Oil capacity ℓ (Imp qt)	7.0 (6-1/8)				

Specifications and Adjustments

VEHICLE SPEED WHEN SHIFTING GEARS

AT

Model 34X68

Throttle position	Vehicle speed km/h (MPH)						
	$D_1 \rightarrow D_2$	$D_2 \rightarrow D_3$	$D_3 \rightarrow D_4$	$D_4 \rightarrow D_3$	$D_3 \rightarrow D_2$	$D_2 \rightarrow D_1$	$1_2 \rightarrow 1_1$
Full throttle	48 - 56 (30 - 35)	88 - 96 (55 - 60)	—	133 - 141 (83 - 88)	80 - 88 (50 - 55)	37 - 45 (23 - 28)	45 - 53 (28 - 33)
Half throttle	31 - 39 (19 - 24)	54 - 62 (34 - 39)	102 - 110 (63 - 68)	75 - 83 (47 - 52)	44 - 52 (27 - 32)	7 - 15 (4 - 9)	45 - 53 (28 - 33)

Model 34X69 and 34X70

Throttle position	Vehicle speed km/h (MPH)						
	$D_1 \rightarrow D_2$	$D_2 \rightarrow D_3$	$D_3 \rightarrow D_4$	$D_4 \rightarrow D_3$	$D_3 \rightarrow D_2$	$D_2 \rightarrow D_1$	$1_2 \rightarrow 1_1$
Full throttle	51 - 60 (32 - 37)	94 - 102 (58 - 63)	—	136 - 144 (85 - 89)	85 - 93 (53 - 58)	40 - 48 (25 - 30)	48 - 56 (30 - 35)
Half throttle	30 - 38 (19 - 24)	52 - 60 (32 - 37)	97 - 105 (60 - 65)	67 - 75 (42 - 47)	42 - 50 (26 - 31)	8 - 16 (5 - 10)	48 - 56 (30 - 35)

Model 34X80

Throttle position	Vehicle speed km/h (MPH)						
	$D_1 \rightarrow D_2$	$D_2 \rightarrow D_3$	$D_3 \rightarrow D_4$	$D_4 \rightarrow D_3$	$D_3 \rightarrow D_2$	$D_2 \rightarrow D_1$	$1_2 \rightarrow 1_1$
Full throttle	52 - 60 (32 - 37)	100 - 108 (62 - 67)	—	145 - 153 (90 - 95)	90 - 98 (56 - 61)	40 - 48 (25 - 30)	49 - 57 (30 - 35)
Half throttle	30 - 38 (19 - 24)	53 - 61 (33 - 38)	103 - 111 (64 - 69)	69 - 77 (43 - 48)	42 - 50 (26 - 31)	8 - 16 (5 - 10)	49 - 57 (30 - 35)

Model 34X81

Throttle position	Vehicle speed km/h (MPH)						
	$D_1 \rightarrow D_2$	$D_2 \rightarrow D_3$	$D_3 \rightarrow D_4$	$D_4 \rightarrow D_3$	$D_3 \rightarrow D_2$	$D_2 \rightarrow D_1$	$1_2 \rightarrow 1_1$
Full throttle	58 - 66 (36 - 41)	107 - 115 (66 - 71)	—	160 - 168 (99 - 104)	96 - 104 (60 - 65)	39 - 47 (24 - 29)	48 - 56 (30 - 35)
Half throttle	33 - 41 (21 - 25)	57 - 65 (35 - 40)	105 - 113 (65 - 70)	69 - 77 (43 - 48)	45 - 53 (28 - 33)	8 - 16 (5 - 10)	48 - 56 (30 - 35)

Simpo PDF Merge and Split Unregistered Version - http://www.simpopdf.com

Specifications and Adjustments (Cont'd)

VEHICLE SPEED WHEN PERFORMING LOCK-UP

Model 34X68

Throttle position	Gear position	Vehicle speed km/h (MPH)
		Lock-up "ON"
Half throttle	D_4	102 - 110 (63 - 68)

Model 34X69 and 34X70

Throttle position	Gear position	Vehicle speed km/h (MPH)	
		Lock-up "ON"	Lock-up "OFF"
Half throttle	D_4	112 - 120 (70 - 75)	97 - 105 (60 - 65)

Model 34X80

Throttle position	Gear position	Vehicle speed km/h (MPH)	
		Lock-up "ON"	Lock-up "OFF"
Half throttle	D_4	116 - 124 (72 - 77)	97 - 105 (60 - 65)

Model 34X81

Throttle position	Gear position	Vehicle speed km/h (MPH)
		Lock-up "ON"
Half throttle	D_4	105 - 113 (65 - 70)

STALL REVOLUTION

Engine		Stall revolution rpm
GA15DE	Model 34X69	2,400 - 2,700
GA16DE	Model 34X70, 34X80	2,550 - 2,850
	Model 34X68, 34X80	2,450 - 2,750
SR20DE	Model 34X81	1,850 - 2,150

THROTTLE WIRE ADJUSTMENT

Unit: mm (in)

Throttle wire stroke	40 - 42 (1.57 - 1.65)

LINE PRESSURE

Model 34X68, 34X69 and 34X70

Engine speed rpm	Line pressure kPa (bar, kg/cm^2, psi)			
	R position	D position	2 position	1 position
Idle	883 (8.83, 9.0, 128)	637 (6.37, 6.5, 92)	1,147 (11.47, 11.7, 166)	1,147 (11.47, 11.7, 166)
Stall	1,765 (17.65, 18.0, 256)	1,275 (12.75, 13.0, 185)	1,275 (12.75, 13.0, 185)	1,275 (12.75, 13.0, 185)

Model 34X80

Engine speed rpm	Line pressure kPa (bar, kg/cm^2, psi)			
	R position	D position	2 position	1 position
Idle	883 (8.83, 9.0, 128)	637 (6.37, 6.5, 92)	1,147 (11.47, 11.7, 166)	1,147 (11.47, 11.7, 166)
Stall	1,765 (17.65, 18.0, 256)	1,275 (12.75, 13.0, 185)	1,275 (12.75, 13.0, 185)	1,275 (12.75, 13.0, 185)

Model 34X81

Engine speed rpm	Line pressure kPa (bar, kg/cm^2, psi)			
	R position	D position	2 position	1 position
Idle	883 (8.83, 9.0, 128)	637 (6.37, 6.5, 92)	1,147 (11.47, 11.7, 166)	1,147 (11.47, 11.7, 166)
Stall	1,765 (17.65, 18.0, 256)	1,275 (12.75, 13.0, 185)	1,275 (12.75, 13.0, 185)	1,275 (12.75, 13.0, 185)

Simpo PDF Merge and Split Unregistered Version - http://www.simpopdf.com

Specifications and Adjustments (Cont'd)

CONTROL VALVES

Control valve return springs

Unit: mm (in)

Parts			Model	Part No.	Free length	Outer diameter
Upper body	①	Pressure modifier valve spring	34X69, 34X70, 34X68, 34X80, 34X81	31742-31X64	25.02 (0.9850)	7.9 (0.311)
	②	Kickdown modulator valve spring		31742-31X03	40.5 (1.594)	9.0 (0.354)
	③	1-2 accumulator valve spring	34X80	31742-31X04	51.14 (2.0134)	17.0 (0.669)
			34X69, 34X70, 34X68, 34X81	31742-31X63	50.8 (2.000)	17.0 (0.669)
	④	3-2 timing valve spring		31736-21X00	26.3 (1.035)	7.2 (0.283)
	⑤	1st reducing valve spring		31835-21X08	22.6 (0.890)	7.3 (0.287)
	⑥	Torque converter relief valve spring		31742-31X06	23.5 (0.925)	7.4 (0.291)
	⑦	Throttle modulator valve spring	34X68, 34X81	31742-31X07	29.5 (1.161)	5.5 (0.217)
			34X69, 34X70, 34X80	31742-31X18	29.5 (1.161)	5.5 (0.217)
	⑧	4th speed cut valve spring	34X69, 34X70, 34X80	31736-01X02	21.7 (0.854)	6.65 (0.2618)
			34X68	31756-21X02	22.6 (0.890)	7.3 (0.287)
			34X81	31835-21X02	23.2 (0.913)	6.2 (0.244)
	⑨	Lock-up control valve spring		31742-31X08	39.5 (1.555)	5.0 (0.197)
	⑩	4-2 sequence valve spring		31742-31X09	39.5 (1.555)	5.1 (0.201)
	—	Oil cooler relief valve spring		31872-31X00	17.02 (0.6701)	8.0 (0.315)
Lower body	①	Throttle valve and detent valve spring	34X81	31802-31X06	32.0 (1.260)	10.0 (0.394)
			34X69, 34X70, 34X68, 34X80	31802-31X07	33.0 (1.299)	10.0 (0.394)
	②	Pressure regulator valve spring		31742-31X00	52.24 (2.0567)	15.0 (0.591)
	③	3-4 shift valve spring	34X68	31762-31X00	52.0 (2.047)	8.0 (0.315)
			34X69, 34X70, 34X80	31762-31X13	52.0 (2.047)	7.45 (0.2933)
			34X81	31762-31X11	52.0 (2.047)	8.0 (0.315)
	④	2-3 shift valve spring		31762-31X01	52.7 (2.075)	7.0 (0.276)
	⑤	1-2 shift valve spring		31762-31X02	45.9 (1.807)	5.3 (0.209)
	⑥	Overrun clutch control valve spring		31742-31X60	48.9 (1.925)	7.0 (0.276)

AT

Simpo PDF Merge and Split Unregistered Version - http://www.simpopdf.com

Specifications and Adjustments (Cont'd)

CLUTCH AND BRAKES

Model	34X68, 34X69, 34X70, 34X80	34X81
Reverse clutch		
Number of drive plates	2	
Number of driven plates	2	
Drive plate thickness mm (in)		
Standard	2.0 (0.079)	
Wear limit	1.8 (0.071)	
Clearance mm (in)		
Standard	0.5 - 0.8 (0.020 - 0.031)	
Allowable limit	1.2 (0.047)	
Thickness of retaining plates	Thickness mm (in)	Part number
	4.4 (0.173)	31537-31X00
	4.6 (0.181)	31537-31X01
	4.8 (0.189)	31537-31X02
	5.0 (0.197)	31537-31X03
	5.2 (0.205)	31537-31X04
High clutch		
Number of drive plates	3	4
Number of driven plates	5	6 + 1
Drive plate thickness mm (in)		
Standard	2.0 (0.079)	1.6 (0.063)
Wear limit	1.8 (0.071)	1.4 (0.055)
Clearance mm (in)		
Standard	1.4 - 1.8 (0.055 - 0.071)	
Allowable limit	2.4 (0.094)	2.6 (0.102)

Thickness of retaining plates	Thickness mm (in)	Part number	Thickness mm (in)	Part number
	3.8 (0.150)	31537-31X11	3.8 (0.150)	31537-31X11
	4.0 (0.157)	31537-31X12	4.0 (0.157)	31537-31X12
	4.2 (0.165)	31537-31X13	4.2 (0.165)	31537-31X13
	4.4 (0.173)	31537-31X14	4.4 (0.173)	31537-31X14
	4.6 (0.181)	31537-31X15	4.6 (0.181)	31537-31X15
	4.8 (0.189)	31537-31X16	4.8 (0.189)	31537-31X16
			5.0 (0.197)	31537-31X17

Model	34X68, 34X69, 34X70, 34X80	34X81
Forward clutch		
Number of drive plates	5	
Number of driven plates	5	
Drive plate thickness mm (in)		
Standard	1.8 (0.071)	
Wear limit	1.6 (0.063)	
Clearance mm (in)		
Standard	0.45 - 0.85 (0.0177 - 0.0335)	
Allowable limit	1.85 (0.0728)	

Thickness of retaining plate	Thickness mm (in)	Part number
	3.6 (0.142)	31537-31X60
	3.8 (0.150)	31537-31X61
	4.0 (0.157)	31537-31X62
	4.2 (0.165)	31537-31X63
	4.4 (0.173)	31537-31X64
	4.6 (0.181)	31537-31X65

Overrun clutch		
Number of drive plates	3	
Number of driven plates	4	
Drive plate thickness mm (in)		
Standard	1.6 (0.063)	
Wear limit	1.4 (0.055)	
Clearance mm (in)		
Standard	1.0 - 1.4 (0.039 - 0.055)	
Allowable limit	2.0 (0.079)	

Thickness of retaining plate	Thickness mm (in)	Part number
	3.6 (0.142)	31567-31X72
	3.8 (0.150)	31567-31X73
	4.0 (0.157)	31567-31X74
	4.2 (0.165)	31567-31X75
	4.4 (0.173)	31567-31X76

Simpo PDF Merge and Split Unregistered Version - http://www.simpopdf.com

Specifications and Adjustments (Cont'd)

Model	34X68, 34X69, 34X70, 34X80	34X81
Low & reverse brake		
Number of drive plates	5	
Number of driven plates	5	
Drive plate thickness mm (in)		
Standard	2.0 (0.079)	
Wear limit	1.8 (0.071)	
Clearance mm (in)		
Standard	1.4 - 1.8 (0.055 - 0.071)	
Allowable limit	2.8 (0.110)	
Thickness of retaining plate	Thickness mm (in)	Part number
	3.6 (0.142)	31667-31X10
	3.8 (0.150)	31667-31X11
	4.0 (0.157)	31667-31X12
	4.2 (0.165)	31667-31X13
	4.4 (0.173)	31667-31X14
	4.6 (0.181)	31667-31X15
Brake band		
Anchor end bolt tightening torque N·m (kg-m, in-lb)	3.9 - 5.9 (0.4 - 0.6, 35 - 52)	
Number of returning revolutions for anchor end bolt	2.5 ± 0.125	
Lock nut tightening torque N·m (kg-m, ft-lb)	31 - 36 (3.2 - 3.7, 23 - 27)	

Clutch and brake return springs

Unit: mm (in)

Return spring		Free length	Outer diameter
Forward clutch (Overrun clutch) (16 pcs)	Inner	26.3 (1.035)	7.7 (0.303)
	Outer	26.6 (1.047)	10.6 (0.417)
Reverse clutch (16 pcs)		18.6 (0.732)	8.0 (0.315)
High clutch (12 pcs)		19.7 (0.776)	11.1 (0.437)

OIL PUMP

Oil pump side clearance mm (in)	0.02 - 0.04 (0.0008 - 0.0016)	
Thickness of inner gears and outer gears	Inner gear	
	Thickness mm (in)	Part number
	9.99 - 10.00 (0.3933 - 0.3937)	31346-31X00
	9.98 - 9.99 (0.3929 - 0.3933)	31346-31X01
	9.97 - 9.98 (0.3925 - 0.3929)	31346-31X02
	Outer gear	
	Thickness mm (in)	Part number
	9.99 - 10.00 (0.3933 - 0.3937)	31347-31X00
	9.98 - 9.99 (0.3929 - 0.3933)	31347-31X01
	9.97 - 9.98 (0.3925 - 0.3929)	31347-31X02
Clearance between oil pump housing and outer gear mm (in)		
Standard	0.08 - 0.15 (0.0031 - 0.0059)	
Allowable limit	0.15 (0.0059)	
Oil pump cover seal ring clearance mm (in)		
Standard	0.10 - 0.25 (0.0039 - 0.0098)	
Allowable limit	0.25 (0.0098)	

INPUT SHAFT

Input shaft seal ring clearance mm (in)	
Standard	0.08 - 0.23 (0.0031 - 0.0091)
Allowable limit	0.23 (0.0091)

PLANETARY CARRIER

Clearance between planetary carrier and pinion washer mm (in)	
Standard	0.15 - 0.70 (0.0059 - 0.0276)
Allowable limit	0.80 (0.0315)

AT

Simpo PDF Merge and Split Unregistered Version - http://www.simpopdf.com

Specifications and Adjustments (Cont'd)

FINAL DRIVE

Differential side gear clearance

Clearance between side gear and differential case with washer mm (in)	0.1 - 0.2 (0.004 - 0.008)

Differential side gear thrust washers (Model 34X69)

Thickness mm (in)	Part number
0.75 - 0.80 (0.0295 - 0.0315)	38424-31X00
0.80 - 0.85 (0.0315 - 0.0335)	38424-31X01
0.85 - 0.90 (0.0335 - 0.0354)	38424-31X02
0.90 - 0.95 (0.0354 - 0.0374)	38424-31X03
0.95 - 1.00 (0.0374 - 0.0394)	38424-31X04

Differential side gear thrust washers (Except model 34X69)

Thickness mm (in)	Part number
0.75 - 0.80 (0.0295 - 0.0315)	38424-D2111
0.80 - 0.85 (0.0315 - 0.0335)	38424-D2112
0.85 - 0.90 (0.0335 - 0.0354)	38424-D2113
0.90 - 0.95 (0.0354 - 0.0374)	38424-D2114
0.95 - 1.00 (0.0374 - 0.0394)	38424-D2115

Differential case end play (Except model 34X81)

Differential case end play mm (in)	0 - 0.15 (0 - 0.0059)

Bearing preload (Model 34X81)

Differential side bearing preload "T" mm (in)	0.04 - 0.09 (0.0016 - 0.0035)

Turning torque (Model 34X81)

Turning torque of final drive assembly N·m (kg-cm, in-lb)	0.49 - 1.08 (5.0 - 11.0, 4.3 - 9.5)

Differential side bearing adjusting shims (Except model 34X81)

Thickness mm (in)	Part number
0.48 (0.0189)	38454-M8001
0.56 (0.0220)	38454-M8003
0.64 (0.0252)	38454-M8005
0.72 (0.0283)	38454-M8007
0.80 (0.0315)	38454-M8009
0.88 (0.0346)	38454-M8011
0.96 (0.0378)	38454-M8013
1.04 (0.0409)	38454-M8015

Differential side bearing adjusting shims (Model 34X81)

Thickness mm (in)	Part number
0.40 (0.0157)	31499-21X07
0.44 (0.0173)	31499-21X08
0.48 (0.0189)	31499-21X09
0.52 (0.0205)	31499-21X10
0.56 (0.0220)	31499-21X11
0.60 (0.0236)	31499-21X12
0.64 (0.0252)	31499-21X13
0.68 (0.0268)	31499-21X14
0.72 (0.0283)	31499-21X15
0.76 (0.0299)	31499-21X16
0.80 (0.0315)	31499-21X17
0.84 (0.0331)	31499-21X18
0.88 (0.0346)	31499-21X19
0.92 (0.0362)	31499-21X20
1.44 (0.0567)	31499-21X21

Simpo PDF Merge and Split Unregistered Version - http://www.simpopdf.com

Specifications and Adjustments (Cont'd)

Table for selecting differential side bearing adjusting shim(s)

Unit: mm (in)

Dial indicator deflection	Suitable shim(s)
0.31 - 0.35 (0.0122 - 0.0138)	0.40 (0.0157)
0.35 - 0.39 (0.0138 - 0.0154)	0.44 (0.0173)
0.39 - 0.43 (0.0154 - 0.0169)	0.48 (0.0189)
0.43 - 0.47 (0.0169 - 0.0185)	0.52 (0.0205)
0.47 - 0.51 (0.0185 - 0.0201)	0.56 (0.0220)
0.51 - 0.55 (0.0201 - 0.0217)	0.60 (0.0236)
0.55 - 0.59 (0.0217 - 0.0232)	0.64 (0.0252)
0.59 - 0.63 (0.0232 - 0.0248)	0.68 (0.0268)
0.63 - 0.67 (0.0248 - 0.0264)	0.72 (0.0283)
0.67 - 0.71 (0.0264 - 0.0280)	0.76 (0.0299)
0.71 - 0.75 (0.0280 - 0.0295)	0.80 (0.0315)
0.75 - 0.79 (0.0295 - 0.0311)	0.84 (0.0331)
0.79 - 0.83 (0.0311 - 0.0327)	0.88 (0.0346)
0.83 - 0.87 (0.0327 - 0.0343)	0.92 (0.0362)
0.87 - 0.91 (0.0343 - 0.0358)	0.48 (0.0189) + 0.48 (0.0189)
0.91 - 0.95 (0.0358 - 0.0374)	0.48 (0.0189) + 0.52 (0.0205)
0.95 - 0.99 (0.0374 - 0.0390)	0.52 (0.0205) + 0.52 (0.0205)
0.99 - 1.03 (0.0390 - 0.0406)	0.52 (0.0205) + 0.56 (0.0220)
1.03 - 1.07 (0.0406 - 0.0421)	0.56 (0.0220) + 0.56 (0.0220)
1.07 - 1.11 (0.0421 - 0.0437)	0.56 (0.0220) + 0.60 (0.0236)
1.11 - 1.15 (0.0437 - 0.0453)	0.60 (0.0236) + 0.60 (0.0236)
1.15 - 1.19 (0.0453 - 0.0469)	0.60 (0.0236) + 0.64 (0.0252)
1.19 - 1.23 (0.0469 - 0.0484)	0.64 (0.0252) + 0.64 (0.0252)
1.23 - 1.27 (0.0484 - 0.0500)	0.64 (0.0252) + 0.68 (0.0268)
1.27 - 1.31 (0.0500 - 0.0516)	0.68 (0.0268) + 0.68 (0.0268)
1.31 - 1.35 (0.0516 - 0.0531)	0.68 (0.0268) + 0.72 (0.0283)
1.35 - 1.39 (0.0531 - 0.0547)	1.44 (0.0567)
1.39 - 1.43 (0.0547 - 0.0563)	0.72 (0.0283) + 0.76 (0.0299)
1.43 - 1.47 (0.0563 - 0.0579)	0.76 (0.0299) + 0.76 (0.0299)
1.47 - 1.51 (0.0579 - 0.0594)	0.76 (0.0299) + 0.80 (0.0315)
1.51 - 1.55 (0.0594 - 0.0610)	0.80 (0.0315) + 0.80 (0.0315)
1.55 - 1.59 (0.0610 - 0.0626)	0.80 (0.0315) + 0.84 (0.0331)
1.59 - 1.63 (0.0626 - 0.0642)	0.84 (0.0331) + 0.84 (0.0331)
1.63 - 1.67 (0.0642 - 0.0657)	0.84 (0.0331) + 0.88 (0.0346)
1.67 - 1.71 (0.0657 - 0.0673)	0.88 (0.0346) + 0.88 (0.0346)
1.71 - 1.75 (0.0673 - 0.0689)	0.88 (0.0346) + 0.92 (0.0362)
1.75 - 1.79 (0.0689 - 0.0705)	0.92 (0.0362) + 0.92 (0.0362)
1.79 - 1.83 (0.0705 - 0.0720)	0.44 (0.0173) + 1.44 (0.0567)
1.83 - 1.87 (0.0720 - 0.0736)	0.48 (0.0189) + 1.44 (0.0567)
1.87 - 1.91 (0.0736 - 0.0752)	0.52 (0.0205) + 1.44 (0.0567)
1.91 - 1.95 (0.0752 - 0.0768)	0.56 (0.0220) + 1.44 (0.0567)

REDUCTION GEAR

Bearing preload (Model 34X68, 34X69, 34X70, 34X80)

Reduction pinion gear bearing preload N·m (kg-cm, in-lb)	0.11 - 0.69 (1.1 - 7.0, 0.95 - 6.08)

Bearing preload (Model 34X81)

Reduction pinion gear bearing preload mm (in)	0.05 (0.0020)

Reduction pinion gear bearing adjusting shims

Thickness mm (in)	Part number
1.74 (0.0685)	31438-31X16
1.78 (0.0701)	31438-31X17
1.82 (0.0717)	31438-31X18
1.86 (0.0732)	31438-31X19
1.90 (0.0748)	31438-31X20
1.92 (0.0756)	31439-31X60
1.94 (0.0764)	31438-31X21
1.96 (0.0772)	31439-31X61
1.98 (0.0780)	31438-31X22
2.00 (0.0787)	31439-31X62
2.02 (0.0795)	31438-31X23
2.04 (0.0803)	31439-31X63
2.06 (0.0811)	31438-31X24
2.08 (0.0819)	31439-31X64
2.10 (0.0827)	31438-31X60
2.12 (0.0835)	31439-31X65
2.14 (0.0843)	31438-31X61
2.16 (0.0850)	31439-31X66
2.18 (0.0858)	31438-31X62
2.20 (0.0866)	31439-31X67
2.22 (0.0874)	31438-31X63
2.24 (0.0882)	31439-31X68
2.26 (0.0890)	31438-31X64
2.28 (0.0898)	31439-31X69
2.30 (0.0906)	31438-31X65
2.34 (0.0921)	31438-31X66
2.38 (0.0937)	31438-31X67
2.42 (0.0953)	31438-31X68
2.46 (0.0969)	31438-31X69
2.50 (0.0984)	31438-31X70
2.54 (0.1000)	31438-31X71
2.58 (0.1016)	31438-31X72
2.62 (0.1031)	31438-31X73
2.66 (0.1047)	31438-31X74

Simpo PDF Merge and Split Unregistered Version - http://www.simpopdf.com

Specifications and Adjustments (Cont'd)

Table for selecting reduction pinion gear bearing adjusting shim

Unit: mm (in)

Dimension "T"	Suitable shim(s)
1.77 - 1.81 (0.0697 - 0.0713)	1.74 (0.0685)
1.81 - 1.85 (0.0713 - 0.0728)	1.78 (0.0701)
1.85 - 1.89 (0.0728 - 0.0744)	1.82 (0.0717)
1.89 - 1.93 (0.0744 - 0.0760)	1.86 (0.0732)
1.93 - 1.96 (0.0760 - 0.0772)	1.90 (0.0748)
1.96 - 1.98 (0.0772 - 0.0780)	1.92 (0.0756)
1.98 - 2.00 (0.0780 - 0.0787)	1.94 (0.0764)
2.00 - 2.02 (0.0787 - 0.0795)	1.96 (0.0772)
2.02 - 2.04 (0.0795 - 0.0803)	1.98 (0.0780)
2.04 - 2.06 (0.0803 - 0.0811)	2.00 (0.0787)
2.06 - 2.08 (0.0811 - 0.0819)	2.02 (0.0795)
2.08 - 2.10 (0.0819 - 0.0827)	2.04 (0.0803)
2.10 - 2.12 (0.0827 - 0.0835)	2.06 (0.0811)
2.12 - 2.14 (0.0835 - 0.0843)	2.08 (0.0819)
2.14 - 2.16 (0.0843 - 0.0850)	2.10 (0.0827)
2.16 - 2.18 (0.0850 - 0.0858)	2.12 (0.0835)
2.18 - 2.20 (0.0858 - 0.0866)	2.14 (0.0843)
2.20 - 2.22 (0.0866 - 0.0874)	2.16 (0.0850)
2.22 - 2.24 (0.0874 - 0.0882)	2.18 (0.0858)
2.24 - 2.26 (0.0882 - 0.0890)	2.20 (0.0866)
2.26 - 2.28 (0.0890 - 0.0898)	2.22 (0.0874)
2.28 - 2.30 (0.0898 - 0.0906)	2.24 (0.0882)
2.30 - 2.32 (0.0906 - 0.0913)	2.26 (0.0890)
2.32 - 2.34 (0.0913 - 0.0921)	2.28 (0.0898)
2.34 - 2.37 (0.0921 - 0.0933)	2.30 (0.0906)
2.37 - 2.41 (0.0933 - 0.0949)	2.34 (0.0921)
2.41 - 2.45 (0.0949 - 0.0965)	2.38 (0.0937)
2.45 - 2.49 (0.0965 - 0.0980)	2.42 (0.0953)
2.49 - 2.53 (0.0980 - 0.0996)	2.46 (0.0969)
2.53 - 2.57 (0.0996 - 0.1012)	2.50 (0.0984)
2.57 - 2.61 (0.1012 - 0.1028)	2.54 (0.1000)
2.61 - 2.65 (0.1028 - 0.1043)	2.58 (0.1016)
2.65 - 2.69 (0.1043 - 0.1059)	2.62 (0.1031)
2.69 - 2.73 (0.1059 - 0.1075)	2.66 (0.1047)

OUTPUT SHAFT

Seal ring clearance

Output shaft seal ring clearance mm (in)	
Standard	0.10 - 0.25 (0.0039 - 0.0098)
Allowable limit	0.25 (0.0098)

End play (Model 34X81)

Output shaft end play mm (in)	0 - 0.5 (0 - 0.020)

Bearing preload (Except model 34X81)

Output shaft bearing preload N·m (kg-cm, in-lb)	0.25 - 0.88 (2.5 - 9.0, 2.2 - 7.8)

Output shaft bearing adjusting spacers (Except model 34X81)

Thickness mm (in)	Part number
6.26 (0.2465)	31437-31X16
6.30 (0.2480)	31437-31X17
6.34 (0.2496)	31437-31X18
6.38 (0.2512)	31437-31X19
6.42 (0.2528)	31437-31X20
6.46 (0.2543)	31437-31X21
6.50 (0.2559)	31437-31X22
6.54 (0.2575)	31437-31X23
6.58 (0.2591)	31437-31X24
6.62 (0.2606)	31437-31X60
6.64 (0.2614)	31437-31X78
6.66 (0.2622)	31437-31X61
6.68 (0.2630)	31437-31X79
6.70 (0.2638)	31437-31X62
6.72 (0.2646)	31437-31X80
6.74 (0.2654)	31437-31X63
6.76 (0.2661)	31437-31X81
6.78 (0.2669)	31437-31X64
6.80 (0.2677)	31437-31X82
6.82 (0.2685)	31437-31X65
6.84 (0.2693)	31437-31X83
6.86 (0.2701)	31437-31X66
6.88 (0.2709)	31437-31X84
6.90 (0.2717)	31437-31X67
6.92 (0.2724)	31437-31X46
6.94 (0.2732)	31437-31X68
6.96 (0.2740)	31437-31X47
6.98 (0.2748)	31437-31X69
7.00 (0.2756)	31437-31X48
7.02 (0.2764)	31437-31X70
7.06 (0.2780)	31437-31X71
7.10 (0.2795)	31437-31X72
7.14 (0.2811)	31437-31X73
7.18 (0.2827)	31437-31X74
7.22 (0.2843)	31437-31X75

Simpo PDF Merge and Split Unregistered Version - http://www.simpopdf.com

Specifications and Adjustments (Cont'd)

Table for selecting output shaft bearing adjusting spacer

Unit: mm (in)

Dimension "T"	Suitable spacer
6.29 - 6.33 (0.2476 - 0.2492)	6.26 (0.2465)
6.33 - 6.37 (0.2492 - 0.2508)	6.30 (0.2480)
6.37 - 6.41 (0.2508 - 0.2524)	6.34 (0.2496)
6.41 - 6.45 (0.2524 - 0.2539)	6.38 (0.2512)
6.45 - 6.49 (0.2539 - 0.2555)	6.42 (0.2528)
6.49 - 6.53 (0.2555 - 0.2571)	6.46 (0.2543)
6.53 - 6.57 (0.2571 - 0.2587)	6.50 (0.2559)
6.57 - 6.61 (0.2587 - 0.2602)	6.54 (0.2575)
6.61 - 6.65 (0.2602 - 0.2618)	6.58 (0.2591)
6.65 - 6.68 (0.2618 - 0.2630)	6.62 (0.2606)
6.68 - 6.70 (0.2630 - 0.2638)	6.64 (0.2614)
6.70 - 6.72 (0.2638 - 0.2646)	6.66 (0.2622)
6.72 - 6.74 (0.2646 - 0.2654)	6.68 (0.2630)
6.74 - 6.76 (0.2654 - 0.2661)	6.70 (0.2638)
6.76 - 6.78 (0.2661 - 0.2669)	6.72 (0.2646)
6.78 - 6.80 (0.2669 - 0.2677)	6.74 (0.2654)
6.80 - 6.82 (0.2677 - 0.2685)	6.76 (0.2661)
6.82 - 6.84 (0.2685 - 0.2693)	6.78 (0.2669)
6.84 - 6.86 (0.2693 - 0.2701)	6.80 (0.2677)
6.86 - 6.88 (0.2701 - 0.2709)	6.82 (0.2685)
6.88 - 6.90 (0.2709 - 0.2717)	6.84 (0.2693)
6.90 - 6.92 (0.2717 - 0.2724)	6.86 (0.2701)
6.92 - 6.94 (0.2724 - 0.2732)	6.88 (0.2709)
6.94 - 6.96 (0.2732 - 0.2740)	6.90 (0.2717)
6.96 - 6.98 (0.2740 - 0.2748)	6.92 (0.2724)
6.98 - 7.00 (0.2748 - 0.2756)	6.94 (0.2732)
7.00 - 7.02 (0.2756 - 0.2764)	6.96 (0.2740)
7.02 - 7.04 (0.2764 - 0.2772)	6.98 (0.2748)
7.04 - 7.06 (0.2772 - 0.2780)	7.00 (0.2756)
7.06 - 7.09 (0.2780 - 0.2791)	7.02 (0.2764)
7.09 - 7.13 (0.2791 - 0.2807)	7.06 (0.2780)
7.13 - 7.17 (0.2807 - 0.2823)	7.10 (0.2795)
7.17 - 7.21 (0.2823 - 0.2839)	7.14 (0.2811)
7.21 - 7.25 (0.2839 - 0.2854)	7.18 (0.2827)
7.25 - 7.29 (0.2854 - 0.2870)	7.22 (0.2843)

BEARING RETAINER

Seal ring clearance

Bearing retainer seal ring clearance mm (in)	
Standard	0.10 - 0.25 (0.0039 - 0.0098)
Allowable limit	0.25 (0.0098)

TOTAL END PLAY

Total end play	mm (in)	0.25 - 0.55 (0.0098 - 0.0217)

Bearing races for adjusting total end play

Thickness mm (in)	Part number
0.6 (0.024)	31435-31X01
0.8 (0.031)	31435-31X02
1.0 (0.039)	31435-31X03
1.2 (0.047)	31435-31X04
1.4 (0.055)	31435-31X05
1.6 (0.063)	31435-31X06
1.8 (0.071)	31435-31X07
2.0 (0.079)	31435-31X08

REVERSE CLUTCH END PLAY

Reverse clutch end play	mm (in)	0.65 - 1.00 (0.0256 - 0.0394)

Thrust washers for adjusting reverse clutch end play

Thickness mm (in)	Part number
0.65 (0.0256)	31508-31X00
0.80 (0.0315)	31508-31X01
0.95 (0.0374)	31508-31X02
1.10 (0.0433)	31508-31X03
1.25 (0.0492)	31508-31X04
1.40 (0.0551)	31508-31X05

ACCUMULATOR

O-ring

Unit: mm (in)

Accumulator	Inner diameter (Small)	Inner diameter (Large)
S/R accumulator	26.9 (1.059)	44.2 (1.740)
N-D accumulator	34.6 (1.362)	39.4 (1.551)

Simpo PDF Merge and Split Unregistered Version - http://www.simopdf.com

Specifications and Adjustments (Cont'd)

Return spring

Unit: mm (in)

Accumulator	Free length	Outer diameter
S/R accumulator spring	56.4 (2.220)	21.0 (0.827)
N-D accumulator spring	43.5 (1.713)	28.0 (1.102)

BAND SERVO

Return spring

Unit: mm (in)

Return spring	Free length	Outer diameter
2nd servo return spring	32.5 (1.280)	25.9 (1.020)
OD servo return spring	31.0 (1.220)	21.7 (0.854)

REMOVAL AND INSTALLATION

Distance between end of converter housing and torque converter	Except model 34X81 21.1 mm (0.831 in) or more
	Model 34X81 15.9 mm (0.626 in) or more

Simpo PDF Merge and Split Unregistered Version - http://www.simpopdf.com

BRAKE SYSTEM

SECTION BR

CONTENTS

PRECAUTIONS AND PREPARATION 3
Precautions 3
Special Service Tools 4
Commercial Service Tools 4
CHECK AND ADJUSTMENT 5
Checking Brake Fluid Level 5
Checking Brake Line 5
Changing Brake Fluid 5
AIR BLEEDING 6
Bleeding Procedure 6
BRAKE HYDRAULIC LINE 7
Removal 8
Inspection 8
Installation 8
CONTROL VALVE 9
Proportioning Valve 9
BRAKE PEDAL AND BRACKET 11
Removal and Installation 11
Inspection 11
Adjustment 11
MASTER CYLINDER 12
Removal 12
Disassembly 12
Inspection 13
Assembly 13
Installation 14
BRAKE BOOSTER 15
On-vehicle Service 15
Removal 15
Inspection 16
Installation 16
VACUUM HOSE 17
Removal and Installation 17
Inspection 17
FRONT DISC BRAKE 19
Pad Replacement 19
Removal 22
Disassembly 22
Inspection — Caliper 22
Inspection — Rotor 23
Assembly 23
Installation 24
REAR DRUM BRAKE 25
Removal 25
Inspection — Wheel Cylinder 26
Wheel Cylinder Overhaul 27
Inspection — Drum 27
Inspection — Lining 27
Installation 27
REAR DISC BRAKE 29
Pad Replacement 29
Removal 31
Disassembly 31
Inspection — Caliper 32
Inspection — Rotor 33
Assembly 33
Installation 35
PARKING BRAKE CONTROL 36
Removal and Installation 36
Inspection 36
Adjustment 37
ANTI-LOCK BRAKE SYSTEM 38
Purpose 38
Operation 38
ABS Hydraulic Circuit 38
System Components 39
System Description 39
Removal and Installation 40
Wiring Diagram — ABS — 45
TROUBLE DIAGNOSES 52
Contents 52
Component Parts and Harness Connector Location 64
SERVICE DATA AND SPECIFICATIONS (SDS) 86
General Specifications 86
Inspection and Adjustment 88

Simpo PDF Merge and Split Unregistered Version - http://www.simpopdf.com

CONTENTS (Cont'd.)

When you read wiring diagrams:
- **Read GI section, "HOW TO READ WIRING DIAGRAMS".**
- **See EL section, "POWER SUPPLY ROUTING" for power distribution circuit.**

When you perform trouble diagnoses, read GI section, "HOW TO FOLLOW FLOW CHART IN TROUBLE DIAGNOSES" and "HOW TO PERFORM EFFICIENT DIAGNOSIS FOR AN ELECTRICAL INCIDENT".

Simpo PDF Merge and Split Unregistered Version - http://www.simpopdf.com

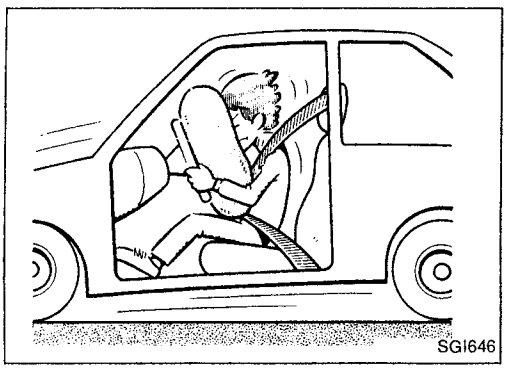

Precautions

SUPPLEMENTAL RESTRAINT SYSTEM (SRS) "AIR BAG" (DUAL AIR BAG SYSTEM)

The Supplemental Restraint System "Air Bag" used along with a seat belt, helps to reduce the risk or severity of injury to the driver and front passenger in a frontal collision. The Supplemental Restraint System consists of air bag modules (located in the center of the steering wheel and on the instrument panel on the passenger side), a diagnosis sensor unit, warning lamp, wiring harness and spiral cable. Information necessary to service the system safely is included in the **RS section** of this Service Manual.

WARNING:

- **To avoid rendering the SRS inoperative, which could increase the risk of personal injury or death in the event of a collision which would result in air bag inflation, all maintenance must be performed by an authorized NISSAN dealer.**
- **Improper maintenance, including incorrect removal and installation of the SRS, can lead to personal injury caused by unintentional activation of the system.**
- **Do not use electrical test equipment on any circuit related to the SRS unless instructed to in this Service Manual. SRS wiring harnesses are covered with yellow insulation either just before the harness connectors or for the complete harness, for easy identification.**

SUPPLEMENTAL RESTRAINT SYSTEM (SRS) "AIR BAG" (SINGLE AIR BAG SYSTEM)

The Supplemental Restraint System "Air Bag" and used along with a seat belt, helps to reduce the risk or severity of injury to the driver in a frontal collision. The Supplemental Restraint System consists of an air bag module (located in the center of the steering wheel), a diagnosis sensor unit, warning lamp, wiring harness and spiral cable. Information necessary to service the system safely is included in the **RS section** of this Service Manual.

WARNING:

- **To avoid rendering the SRS inoperative, which could increase the risk of personal injury or death in the event of a collision which would result in air bag inflation, all maintenance must be performed by an authorized NISSAN dealer.**
- **Improper maintenance, including incorrect removal and installation of the SRS, can lead to personal injury caused by unintentional activation of the system.**
- **Do not use electrical test equipment on any circuit related to the SRS unless instructed to in this Service Manual.**

Simpo PDF Merge and Split Unregistered Version - http://www.simpopdf.com

Precautions (Cont'd)

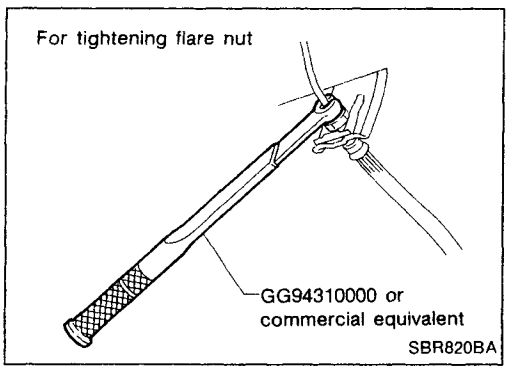

BRAKE SYSTEM

- **Recommended fluid is brake fluid "DOT 3" or "DOT 4".**
- **Never reuse drained brake fluid.**
- **Do not mix different types of brake fluids (DOT 3, DOT 4).**
- **Be careful not to splash brake fluid on painted areas; it may cause paint damage. If brake fluid is splashed on painted areas, wash it away with water immediately.**
- **To clean master cylinder parts, disc brake caliper parts or wheel cylinder parts, use clean brake fluid.**
- **Never use mineral oils such as gasoline or kerosene. They will ruin rubber parts of hydraulic system.**
- **Use flare nut wrench when removing and installing brake tubes.**
- **Always torque brake lines when installing.**

WARNING:

- **Clean brakes with a vacuum dust collector to minimize risk of health hazard from powder caused by friction.**

Special Service Tools

Tool number Tool name	Description	
GG94310000 Flare nut torque wrench	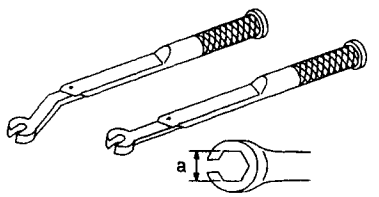 NT406	Removing and installing each brake piping **a: 10 mm (0.39 in)** **: 16.2 N·m (1.65 kg-m, 11.9 ft-lb)**

Commercial Service Tools

Tool name	Description	
① Flare nut crows foot ② Torque wrench	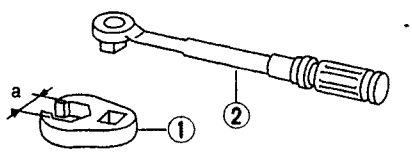 NT360	Removing and installing each brake piping **a: 10 mm (0.39 in)**
Brake fluid pressure gauge	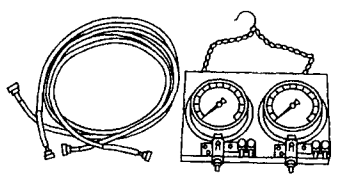 NT151	Measuring brake fluid pressure

Simpo PDF Merge and Split Unregistered Version - http://www.simpopdf.com

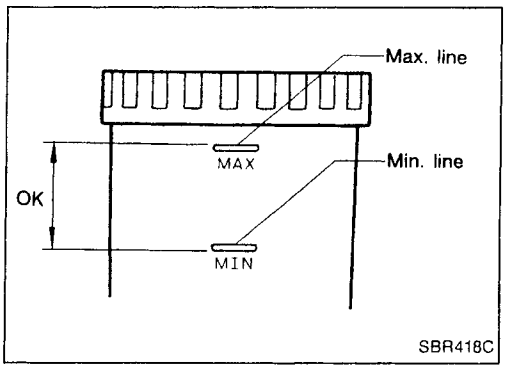

Checking Brake Fluid Level

- Check fluid level in reservoir tank. It should be between Max. and Min. lines on reservoir tank.
- If fluid level is extremely low, check brake system for leaks.
- If brake warning lamp comes on, check brake fluid level switch and parking brake switch.

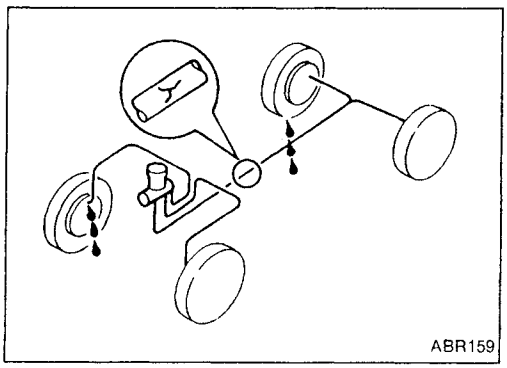

Checking Brake Line

CAUTION:

If leakage occurs around joints, retighten or, if necessary, replace damaged parts.

1. Check brake lines (tubes and hoses) for cracks, deterioration or other damage. Replace any damaged parts.
2. Check for oil leakage by fully depressing brake pedal while engine is running.

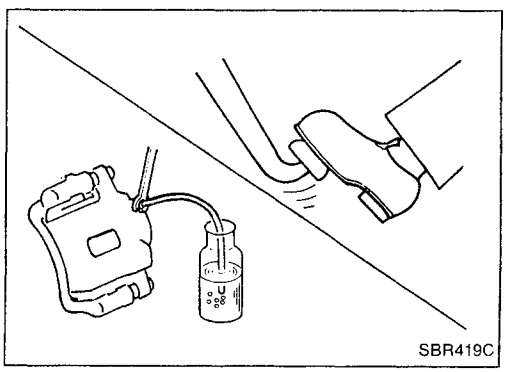

Changing Brake Fluid

CAUTION:

- **Refill with new brake fluid "DOT 3" or "DOT 4".**
- **Always keep fluid level higher than minimum line on reservoir tank.**
- **Never reuse drained brake fluid.**
- **Do not mix different types of brake fluids (DOT 3, DOT 4).**
- **Be careful not to splash brake fluid on painted areas; it may cause paint damage. If brake fluid is splashed on painted areas, wash it away with water immediately.**

1. Clean inside of reservoir tank, and refill with new brake fluid.
2. Connect a vinyl tube to each air bleeder valve.
3. Drain brake fluid from each air bleeder valve by depressing brake pedal.
4. Refill until new brake fluid comes out of each air bleeder valve.
   Use same procedure as in bleeding hydraulic system to refill brake fluid.
   Refer to "Bleeding Procedure", BR-6.

Simpo PDF Merge and Split Unregistered Version - http://www.simpopdf.com

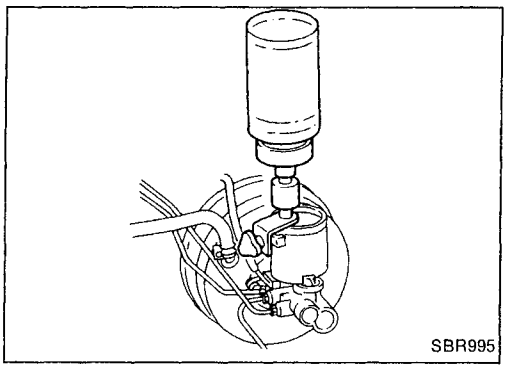
SBR995

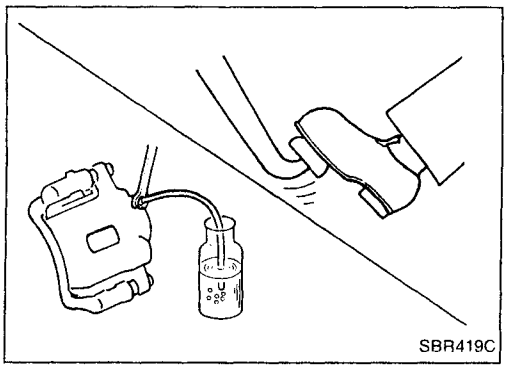
SBR419C

Bleeding Procedure

CAUTION:

- **Carefully monitor brake fluid level at master cylinder during bleeding operation.**
- **If master cylinder is suspected to have air inside, bleed air from master cylinder first. Refer to "Installation", "MASTER CYLINDER", BR-12.**
- **Fill reservoir with new brake fluid "DOT 3" or "DOT 4". Make sure it is full at all times while bleeding air out of system.**
- **Do not mix different types of brake fluids (DOT 3, DOT 4).**
- **Place a container under master cylinder to avoid spillage of brake fluid.**
- **For models with ABS, turn ignition switch OFF and disconnect ABS actuator connector or battery cable.**
- Bleed air in the following order:

  RHD models

  Left rear brake→Right front brake→Right rear brake→Left front brake

  LHD models

  Right rear brake→Left front brake→Left rear brake→Right front brake.

1. Connect a transparent vinyl tube to air bleeder valve.
2. Fully depress brake pedal several times.
3. With brake pedal depressed, open air bleeder valve to release air.
4. Close air bleeder valve.
5. Release brake pedal slowly.
6. Repeat steps 2. through 5. until clear brake fluid comes out of air bleeder valve.
7. Tighten air bleeder valve.

   : 7 - 9 N·m (0.7 - 0.9 kg-m, 61 - 78 in-lb)

Simpo PDF Merge and Split Unregistered Version - http://www.simpopdf.com

Without anti-lock brake system
(Models with dual proportioning valve built into master cylinder)
(built-in type)

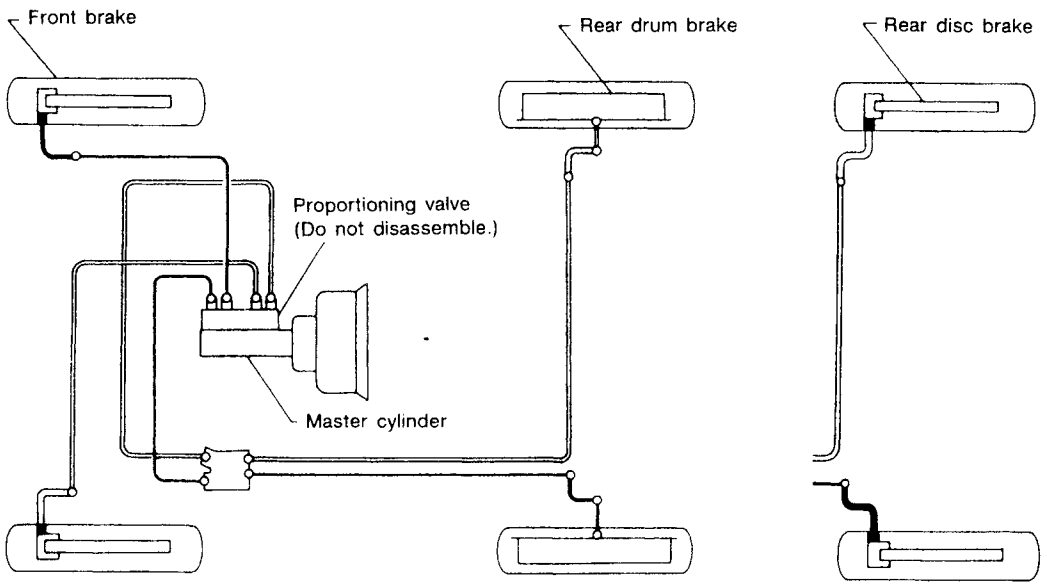

With anti-lock brake system

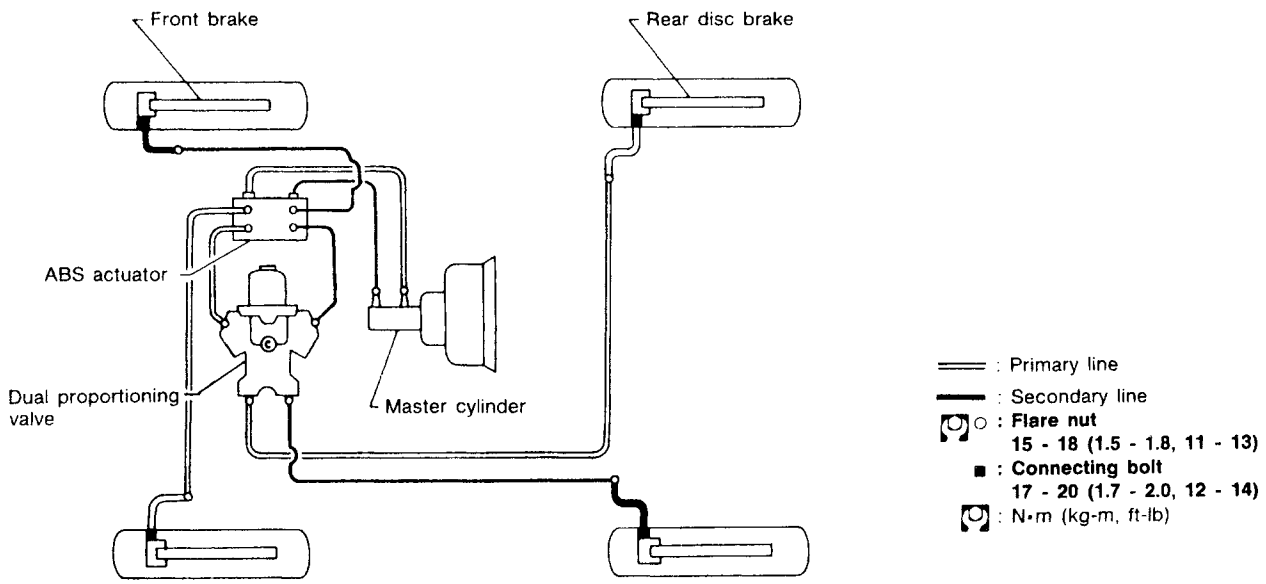

SBR086D

BR

Simpo PDF Merge and Split Unregistered Version - http://www.simpopdf.com

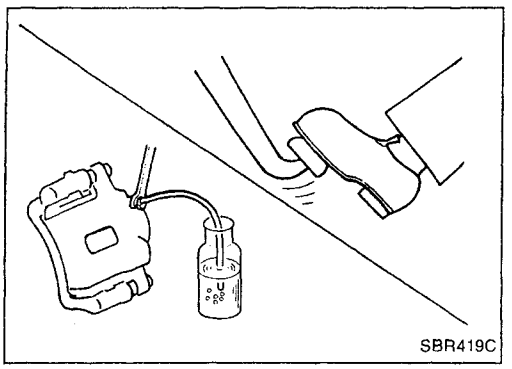
SBR419C

Removal

CAUTION:

- **Be careful not to splash brake fluid on painted areas; it may cause paint damage. If brake fluid is splashed on painted areas, wash it away with water immediately.**
- **All hoses must be free from excessive bending, twisting and pulling.**

1. Connect a vinyl tube to air bleeder valve.
2. Drain brake fluid from each air bleeder valve by depressing brake pedal.
3. Remove flare nut securing brake tube to hose, then withdraw lock spring.
4. Cover openings to prevent entrance of dirt whenever disconnecting hydraulic line.

Inspection

Check brake lines (tubes and hoses) for cracks, deterioration or other damage. Replace any damaged parts.

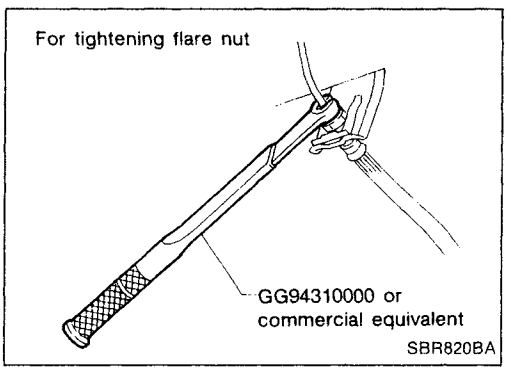

SBR820BA

Installation

CAUTION:

- **Refill with new brake fluid "DOT 3" or "DOT 4".**
- **Never reuse drained brake fluid.**
- **Do not mix different types of brake fluids (DOT 3, DOT 4).**

1. Tighten all flare nuts and connecting bolts.
   Flare nut:
   : 15 - 18 N·m (1.5 - 1.8 kg-m, 11 - 13 ft-lb)
   Connecting bolt:
   : 17 - 20 N·m (1.7 - 2.0 kg-m, 12 - 14 ft-lb)
2. Refill until new brake fluid comes out of each air bleeder valve.
3. Bleed air. Refer to "Bleeding Procedure", BR-6.

Simpo PDF Merge and Split Unregistered Version - http://www.simpopdf.com

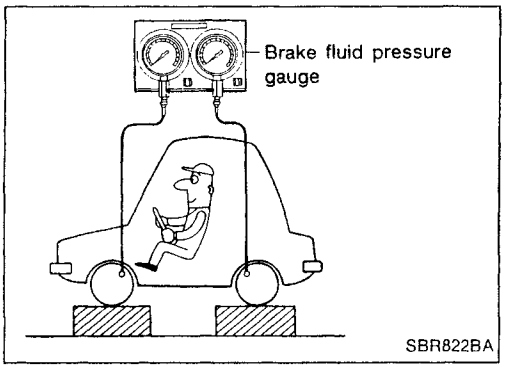

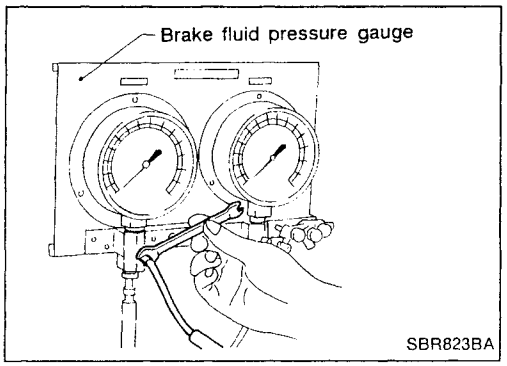

Proportioning Valve

INSPECTION

CAUTION:

- **Carefully monitor brake fluid level at master cylinder.**
- **Use new brake fluid "DOT 3" or "DOT 4".**
- **Do not mix different types of brake fluids (DOT 3, DOT 4).**
- **Be careful not to splash brake fluid on painted areas; it may cause paint damage. If brake fluid is splashed on paint areas, wash it away with water immediately.**
- **Depress pedal slowly when raising front brake pressure.**
- **Check rear brake pressure 2 seconds after front brake pressure reaches specified value.**
- **For models with ABS disconnect harness connectors from ABS actuator relay before checking.**

1. Connect Tool to air bleeders of front and rear brakes on either LH or RH side.
2. Bleed air from the Tool.
3. Check rear brake pressure by depressing brake pedal (increasing front brake pressure).

Unit: kPa (bar, kg/cm^2, psi)

Applied models	Without ABS	With ABS	
	GA14DE, GA16DE, CD20	GA16DE*	SR20DE
Applied pressure (Front brake)	7,355 (73.6, 75, 1,067)	6,375 (63.7, 65, 924)	5,394 (53.9, 55, 782)
Output pressure (Rear brake)	5,100 - 5,492 (51.0 - 54.9, 52 - 56, 739 - 796)	3,432 - 3,825 (34.3 - 38.2, 35 - 39, 498 - 555)	2,452 - 2,844 (24.5 - 28.4, 25 - 29, 356 - 412)

* Models for Australia

If output pressure is out of specifications, replace dual proportioning valve (separated type) or master cylinder assembly (built-in type).

4. Bleed air after disconnecting the Tool. Refer to "Bleeding Procedure", BR-6.

Simpo PDF Merge and Split Unregistered Version - http://www.simpopdf.com

Proportioning Valve (Cont'd)

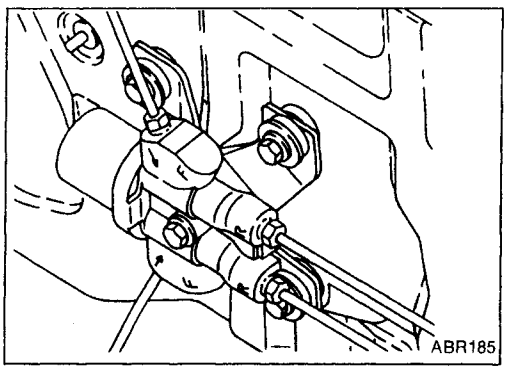

REMOVAL (Separated type)

CAUTION:

- **Be careful not to splash brake fluid on painted areas; it may cause paint damage. If brake fluid is splashed on painted areas, wash it away with water immediately.**
- **All hoses must be free from excessive bending, twisting and pulling.**

1. Connect a vinyl tube to air bleeder valve.
2. Drain brake fluid from each air bleeder valve by depressing brake pedal.
3. Loosen flare nut.
4. Remove proportioning valve mounting bolt, then remove flare nut.

INSTALLATION (Separated type)

CAUTION:

- **Refill with new brake fluid "DOT 3" or "DOT 4".**
- **Never reuse drained brake fluid.**
- **Do not mix different types of brake fluids (DOT 3, DOT 4).**

1. Temporarily fit flare nut to proportioning valve.
2. Tighten proportioning valve mounting bolt, then tighten flare nut with wooden block placed between proportioning valve and dash panel.
   Flare nut:
   : 15 - 18 N·m (1.5 - 1.8 kg-m, 11 - 13 ft-lb)
   Mounting bolt:
   : 5.1 - 8.8 N·m (0.52 - 0.9 kg-m, 45.1 - 78.1 in-lb)
3. Refill until new brake fluid comes out of each air bleeder valve.
4. Bleed air. Refer to "Bleeding Procedure", BR-6.

REMOVAL AND INSTALLATION (Built-in type)

Always replace together with master cylinder as an assembly.

- Refer to "MASTER CYLINDER", BR-12.

Simpo PDF Merge and Split Unregistered Version - http://www.simpopdf.com

Removal and Installation

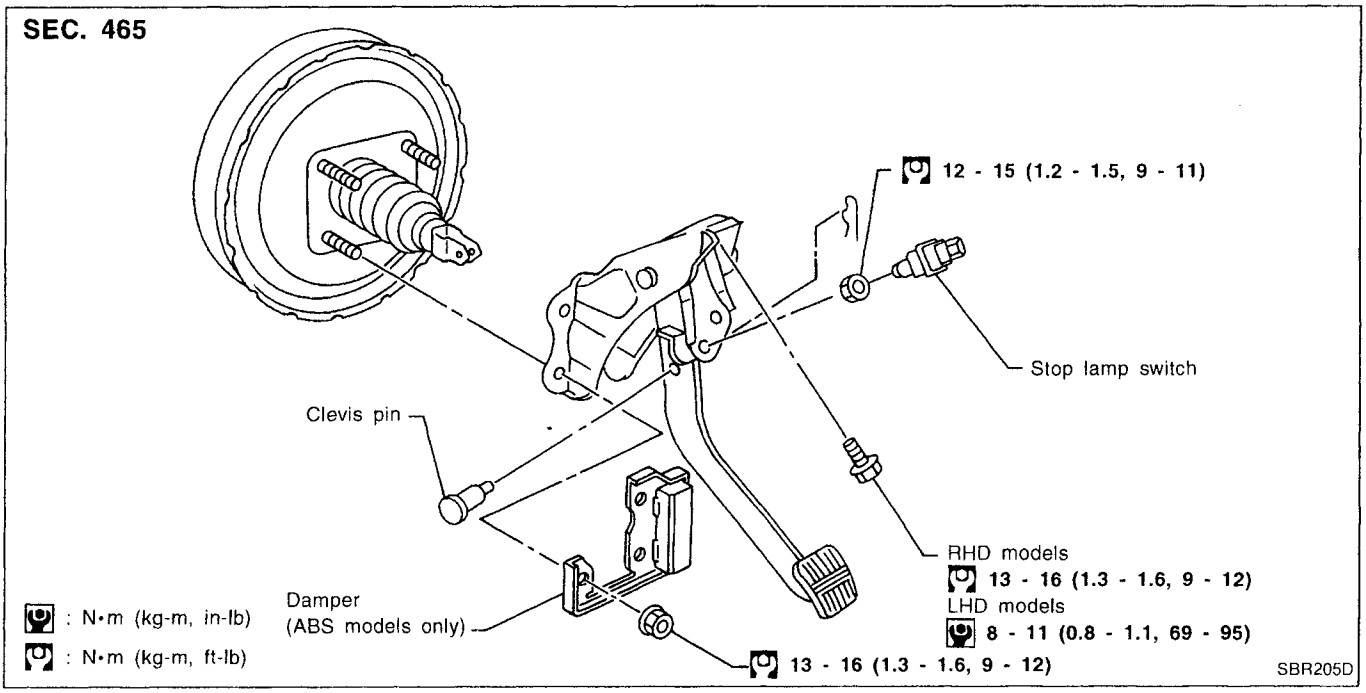

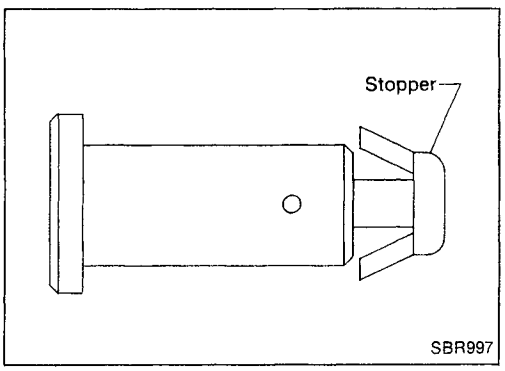

Inspection

Check brake pedal for following items:

- Brake pedal bend
- Clevis pin deformation
- Crack of any welded portion
- Crack or deformation of clevis pin stopper

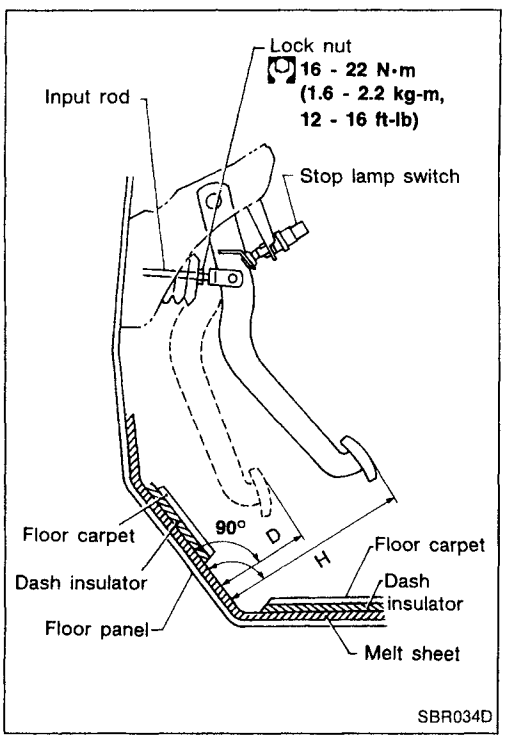

Adjustment

Check brake pedal free height from dash reinforcement panel (RHD) and dash lower panel (LHD). Adjust if necessary.

H: Free height
Refer to SDS (BR-88).

D: Depressed height
Refer to SDS (BR-88).
Under force of 490 N (50 kg, 110 lb) with engine running

1. Loosen lock nut and adjust pedal free height by turning brake booster input rod. Then tighten lock nut.
2. Check pedal free play.

Make sure that stop lamps go off when pedal is released.

3. Check brake pedal's depressed height while engine is running.
   If lower than specification, check for leaks, air in system or damage to components (master cylinder, wheel cylinder, etc.). Then make necessary repairs.

BR

Simpo PDF Merge and Split Unregistered Version - http://www.simpopdf.com

Removal

CAUTION:

- **Be careful not to splash brake fluid on painted areas; it may cause paint damage. If brake fluid is splashed on painted areas, wash it away with water immediately.**
- **In the case of brake fluid leakage from the master cylinder, disassemble the cylinder. Then check piston cups for deformation or scratches and replace necessary parts.**

1. Connect a vinyl tube to air bleeder valve.
2. Drain brake fluid from each air bleeder valve, depressing brake pedal to empty fluid from master cylinder.
3. Remove brake pipe flare nuts.
4. Remove master cylinder mounting nuts.

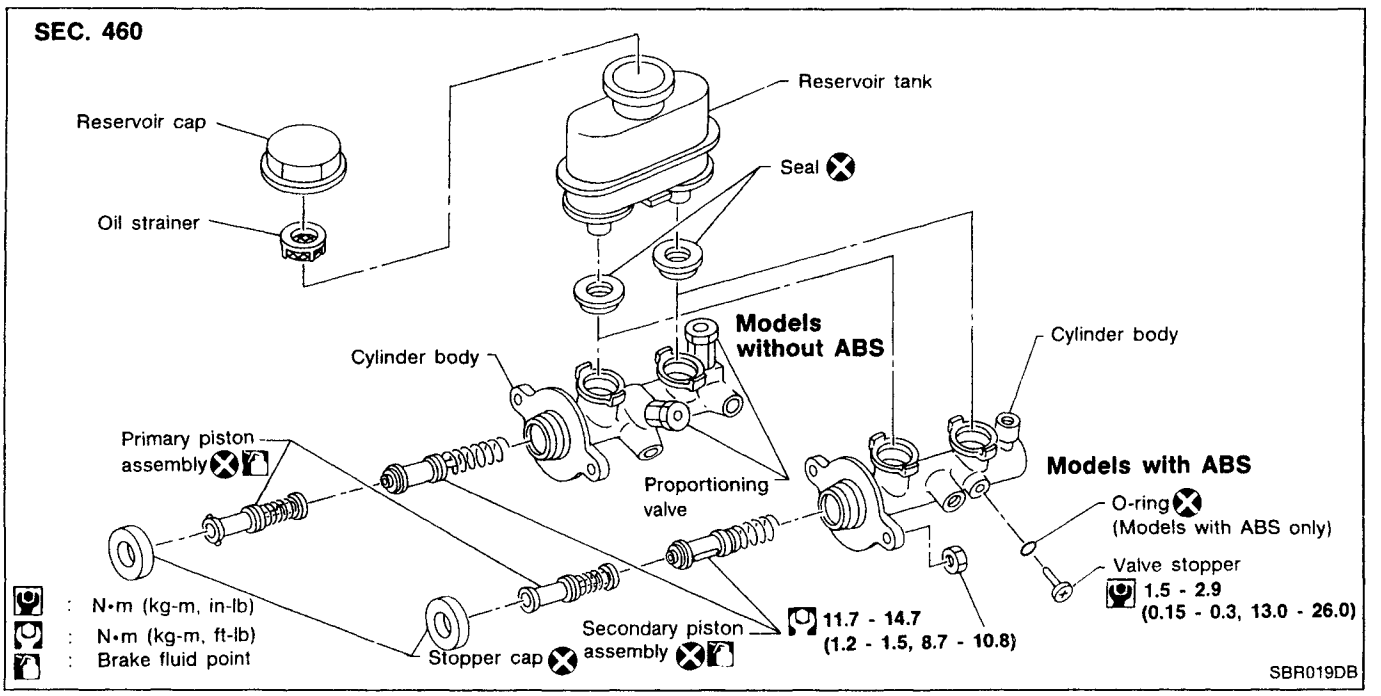

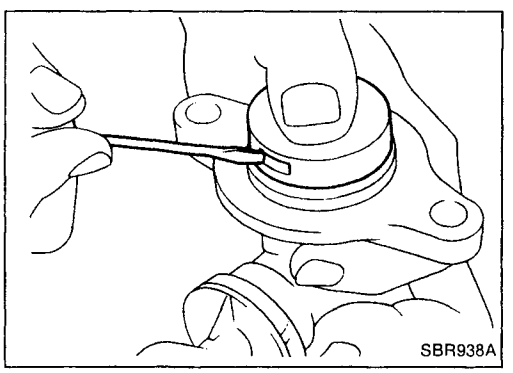

Disassembly

1. Bend claws of stopper cap outward.

Simpo PDF Merge and Split Unregistered Version - http://www.simpopdf.com

Disassembly (Cont'd)

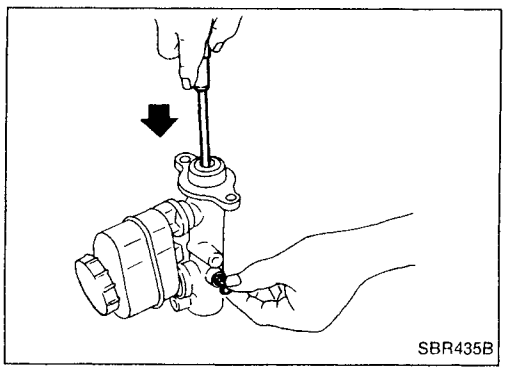
SBR435B

2. Remove valve stopper while piston is pushed into cylinder (Models with ABS only).

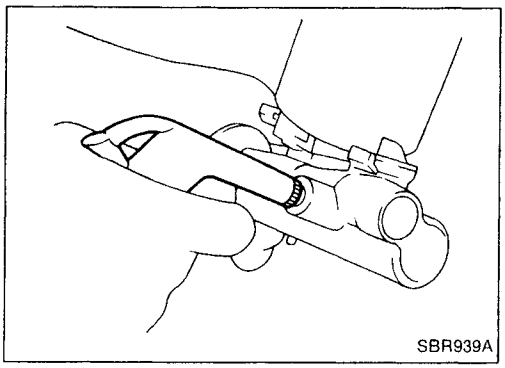
SBR939A

3. Remove piston assemblies.

If it is difficult to remove secondary piston assembly, gradually apply compressed air through fluid outlet.

4. Draw out reservoir tank.

Inspection

Check master cylinder inner wall for pin holes or scratches. Replace if damaged.

BR

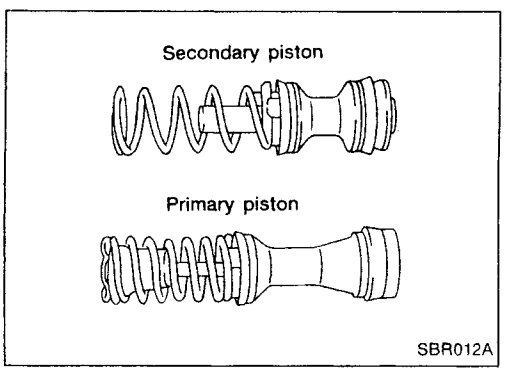

SBR012A

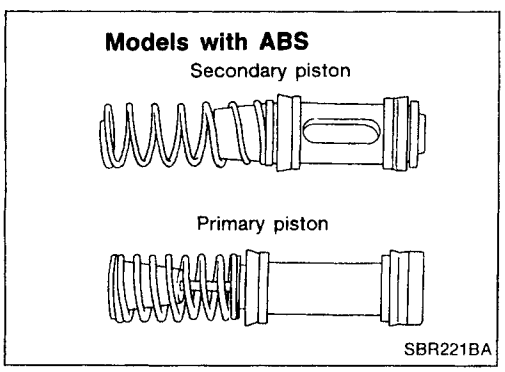

SBR221BA

Assembly

1. Insert secondary piston assembly. Then insert primary piston assembly.

- **Pay attention to direction of piston cups in figure at left. Also, insert pistons squarely to avoid scratches on cylinder bore.**
- **Pay attention to alignment of secondary piston slit with valve stopper mounting hole of cylinder body (For models with ABS only).**

Simpo PDF Merge and Split Unregistered Version - http://www.simpopdf.com

Assembly (Cont'd)

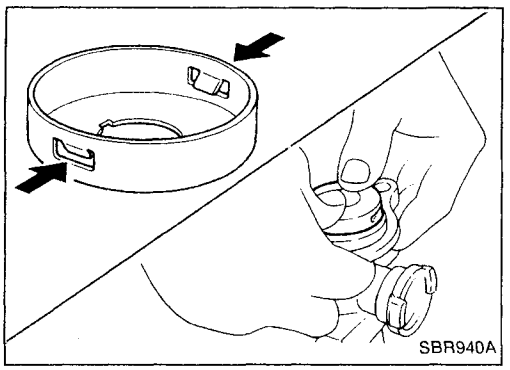
SBR940A

2. Install stopper cap.

Before installing stopper cap, ensure that claws are bent inward.

3. Push reservoir tank seals into cylinder body.
4. Push reservoir tank into cylinder body.

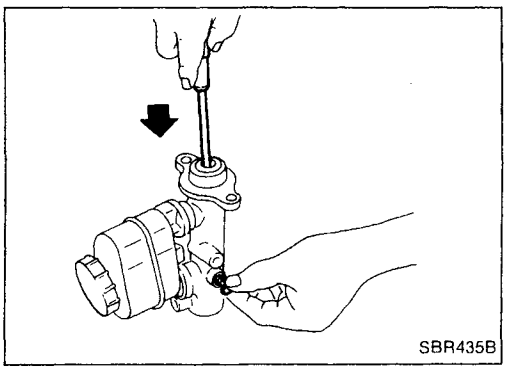
SBR435B

5. Install valve stopper while piston is pushed into cylinder (Models with ABS only).

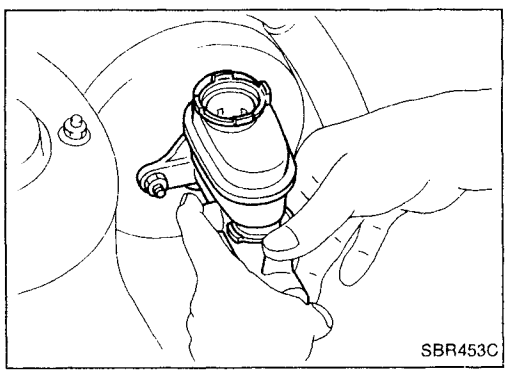
SBR453C

Installation

CAUTION:

- **Refill with new brake fluid "DOT 3" or "DOT 4".**
- **Never reuse drained brake fluid.**
- **Do not mix different types of brake fluids (DOT 3, DOT 4).**

1. Place master cylinder onto brake booster and secure mounting nuts lightly.
2. Torque mounting nuts.
   : 11.7 - 14.7 N·m (1.2 - 1.5 kg-m, 8.7 - 10.8 ft-lb)
3. Fill up reservoir tank with new brake fluid.
4. Plug all ports on master cylinder with fingers to prevent air suction while releasing brake pedal.
5. Have driver depress brake pedal slowly several times until no air comes out of master cylinder.
6. Fit brake lines to master cylinder.
7. Tighten flare nuts.
   : 15 - 18 N·m (1.5 - 1.8 kg-m, 11 - 13 ft-lb)
8. Bleed air from brake system. Refer to "Bleeding Procedure", BR-6.

Simpo PDF Merge and Split Unregistered Version - http://www.simpopdf.com

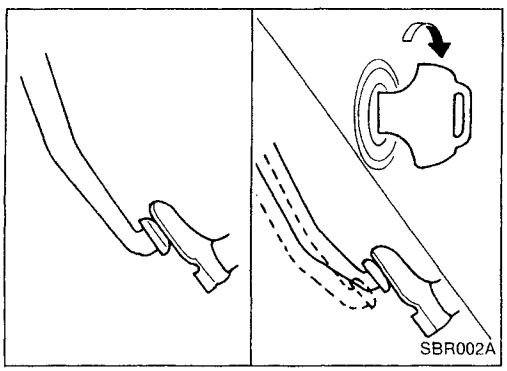

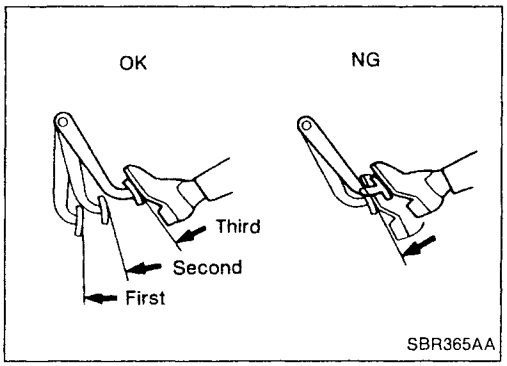

On-vehicle Service

OPERATING CHECK

- Depress brake pedal several times with engine off. After exhausting vacuum, make sure there is no change in pedal stroke.
- Depress brake pedal, then start engine. If pedal goes down slightly, operation is normal.

AIRTIGHT CHECK

- Start engine, and stop it after one or two minutes. Depress brake pedal several times slowly. Booster is airtight if pedal stroke is less each time.
- Depress brake pedal while engine is running, and stop engine with pedal depressed. The pedal stroke should not change after holding pedal down for **30 seconds**.

Removal

CAUTION:

- **Be careful not to splash brake fluid on painted areas; it may cause paint damage. If brake fluid is splashed on painted areas, wash it away with water immediately.**
- **Be careful not to deform or bend brake pipes, during removal of booster.**

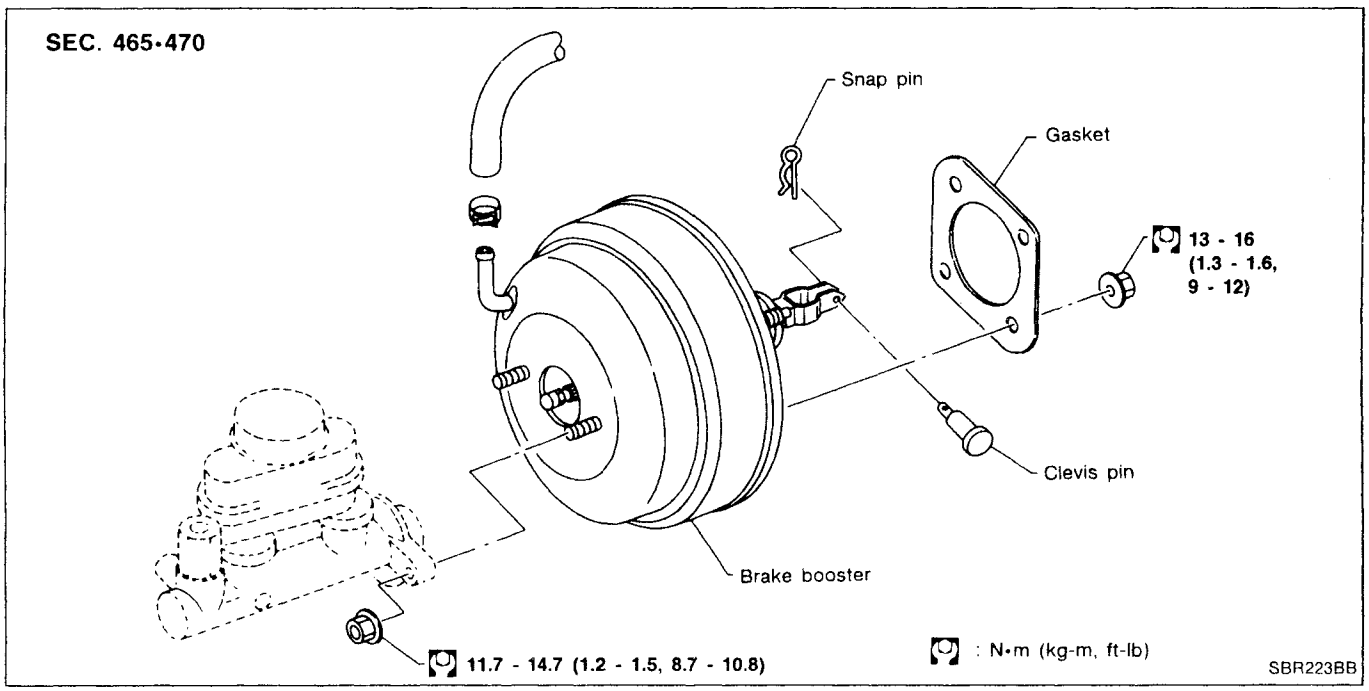

BR

Simpo PDF Merge and Split Unregistered Version - http://www.simpopdf.com

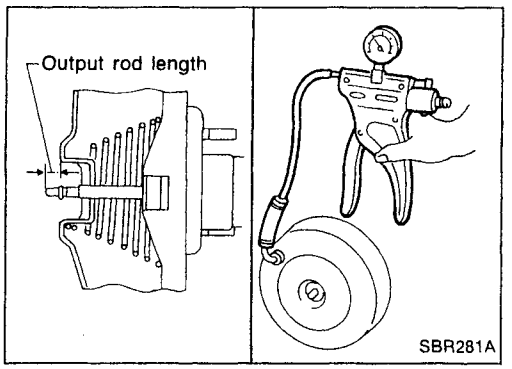

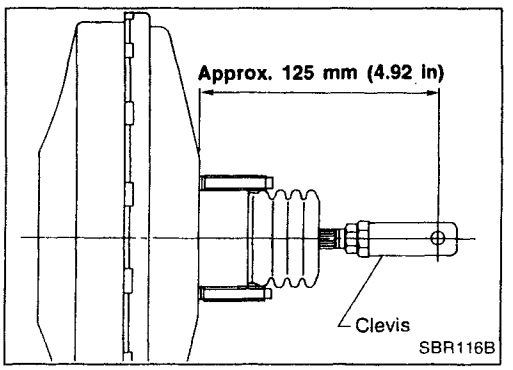

Inspection

OUTPUT ROD LENGTH CHECK

1. Supply brake booster with vacuum of –66.7 kPa (–667 mbar, –500 mmHg, –19.69 inHg) using a hand vacuum pump.
2. Check output rod length.
   Specified length:
   M195, S205 or C205
   10.275 - 10.525 mm (0.4045 - 0.4144 in)

Installation

CAUTION:

- **Be careful not to deform or bend brake pipes during installation of booster.**
- **Replace clevis pin if damaged.**
- **Refill with new brake fluid "DOT 3" or "DOT 4".**
- **Never reuse drained brake fluid.**
- **Do not mix different types of brake fluids (DOT 3, DOT 4).**
- **Due to the angle of installation, thread can be damaged by the dash panel.**

1. Before fitting booster, temporarily adjust clevis to dimension shown. (Does not apply to vehicles fitted with ABS.)
2. Fit booster, then secure mounting nuts (brake pedal bracket to booster) lightly.
3. Connect brake pedal and booster input rod with clevis pin.
4. Secure mounting nuts.
   Specification:
   : 13 - 16 N·m (1.3 - 1.6 kg-m, 9 - 12 ft-lb)
5. Install master cylinder. Refer to BR-12.
6. Bleed air. Refer to "Bleeding Procedure", BR-6.

Simpo PDF Merge and Split Unregistered Version - http://www.simpopdf.com

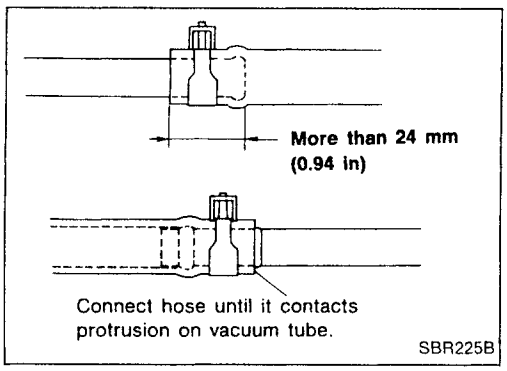

Removal and Installation

CAUTION:

When installing vacuum hoses, pay attention to the following points.

- **Do not apply any oil or lubricants to vacuum hose and check valve.**
- **Insert vacuum tube into vacuum hose as shown.**

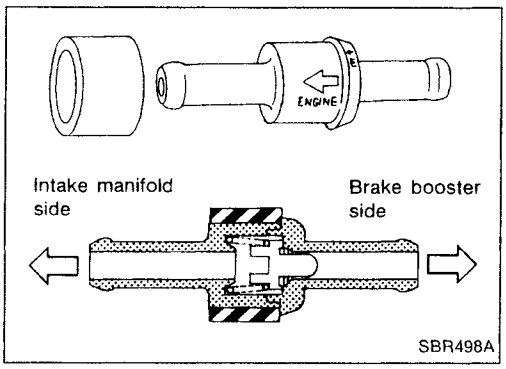

- **Install check valve, paying attention to its direction.**

TYPE 1

TYPE 2

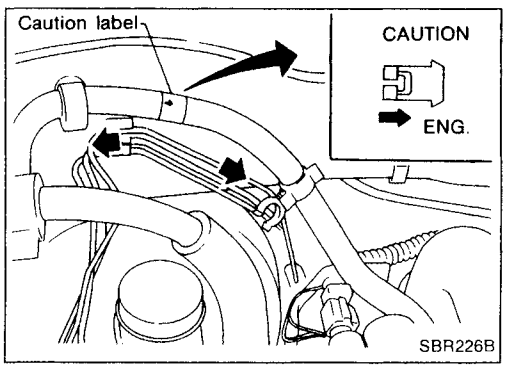

BR

Inspection

HOSES AND CONNECTORS

Check vacuum lines, connections and check valve for airtightness, improper attachment, chafing and deterioration.

Simpo PDF Merge and Split Unregistered Version - http://www.simpopdf.com

Inspection (Cont'd)

CHECK VALVE

Check vacuum with a vacuum pump.

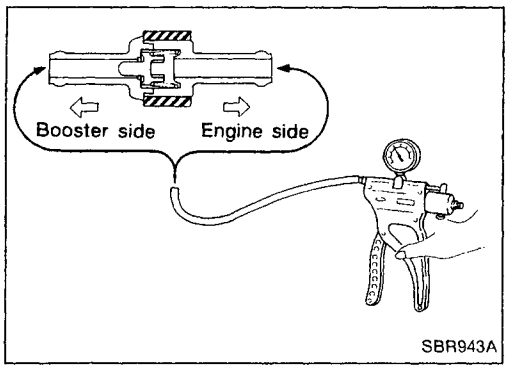

Connect to booster side	Vacuum should exist.
Connect to engine side	Vacuum should not exist.

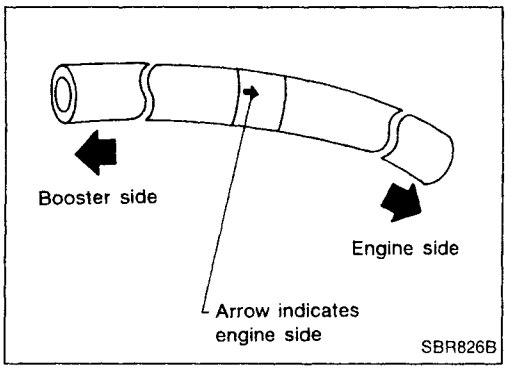

VACUUM WARNING SWITCH (Diesel engine models)

Test continuity through vacuum warning switch with an ohmmeter and vacuum pump.

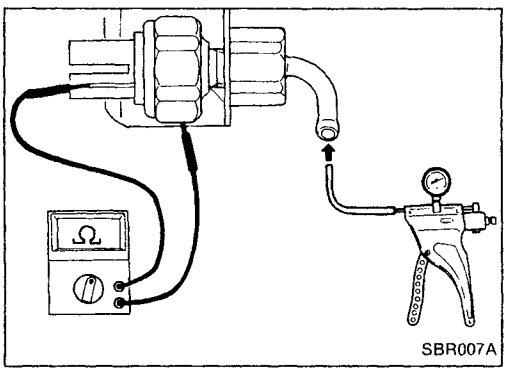

Vacuum condition	Continuity
Less than 26.7 kPa (267 mbar, 200 mmHg, 7.87 inHg)	Yes
33.3 kPa (333 mbar, 250 mmHg, 9.84 inHg) or more	No

VACUUM PUMP

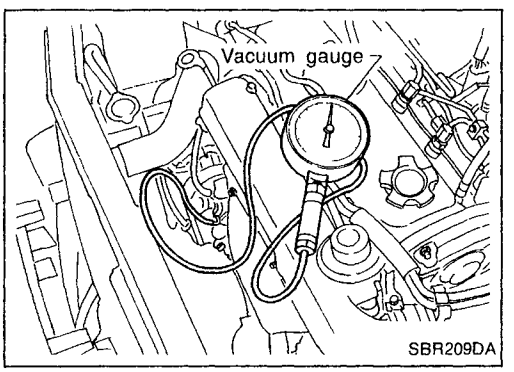

1. Install vacuum gauge.
2. Run engine at 1,000 rpm or more.
3. Check vacuum.

Specified vacuum:

86.6 kPa (866 mbar, 650 mmHg, 25.59 inHg) or more

Simpo PDF Merge and Split Unregistered Version - http://www.simpopdf.com

Pad Replacement

WARNING:
Clean brake pads with a vacuum dust collector to minimize the hazard of airborne particles or other materials.
CAUTION:

- **When cylinder body is open, do not depress brake pedal or piston will pop out.**
- **Be careful not to damage piston boot or get oil on rotor. Always replace shims when replacing pads.**
- **If shims are rusted or show peeling of the rubber coat, replace them with new shims.**
- **It is not necessary to remove connecting bolt except for disassembly or replacement of caliper assembly. In this case, suspend cylinder body with wire so as not to stretch brake hose.**

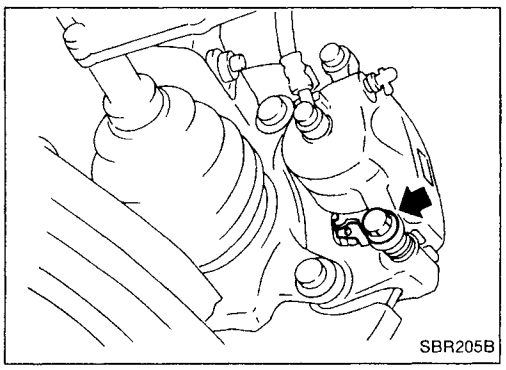
SBR205B

1. Remove master cylinder reservoir cap.
2. Remove lower pin bolt.

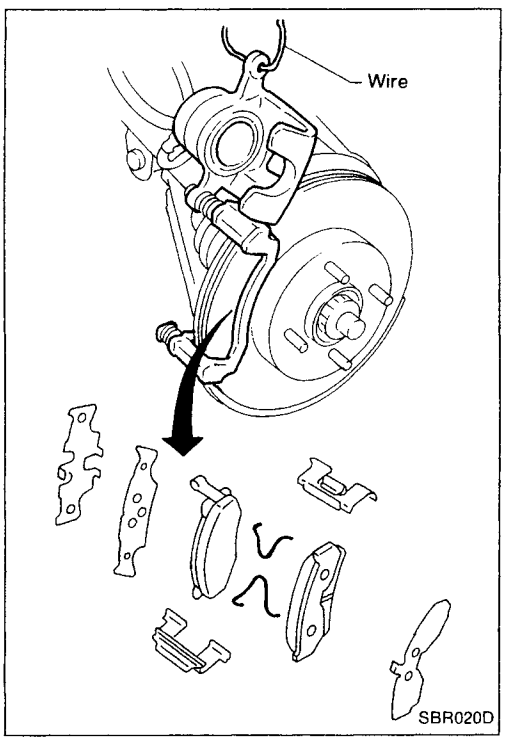

SBR020D

3. Open cylinder body upward. Then remove pad retainers, return spring (Except AD22VF brake model) and inner/outer shims.

Standard pad thickness:

CL22VD and CL22VE	**11 mm (0.43 in)**
CL22VF	**10 mm (0.39 in)**

Pad wear limit:
2.0 mm (0.079 in)

Carefully monitor brake fluid level because brake fluid will return to reservoir when pushing back piston.

BR

Simpo PDF Merge and Split Unregistered Version - http://www.simpopdf.com

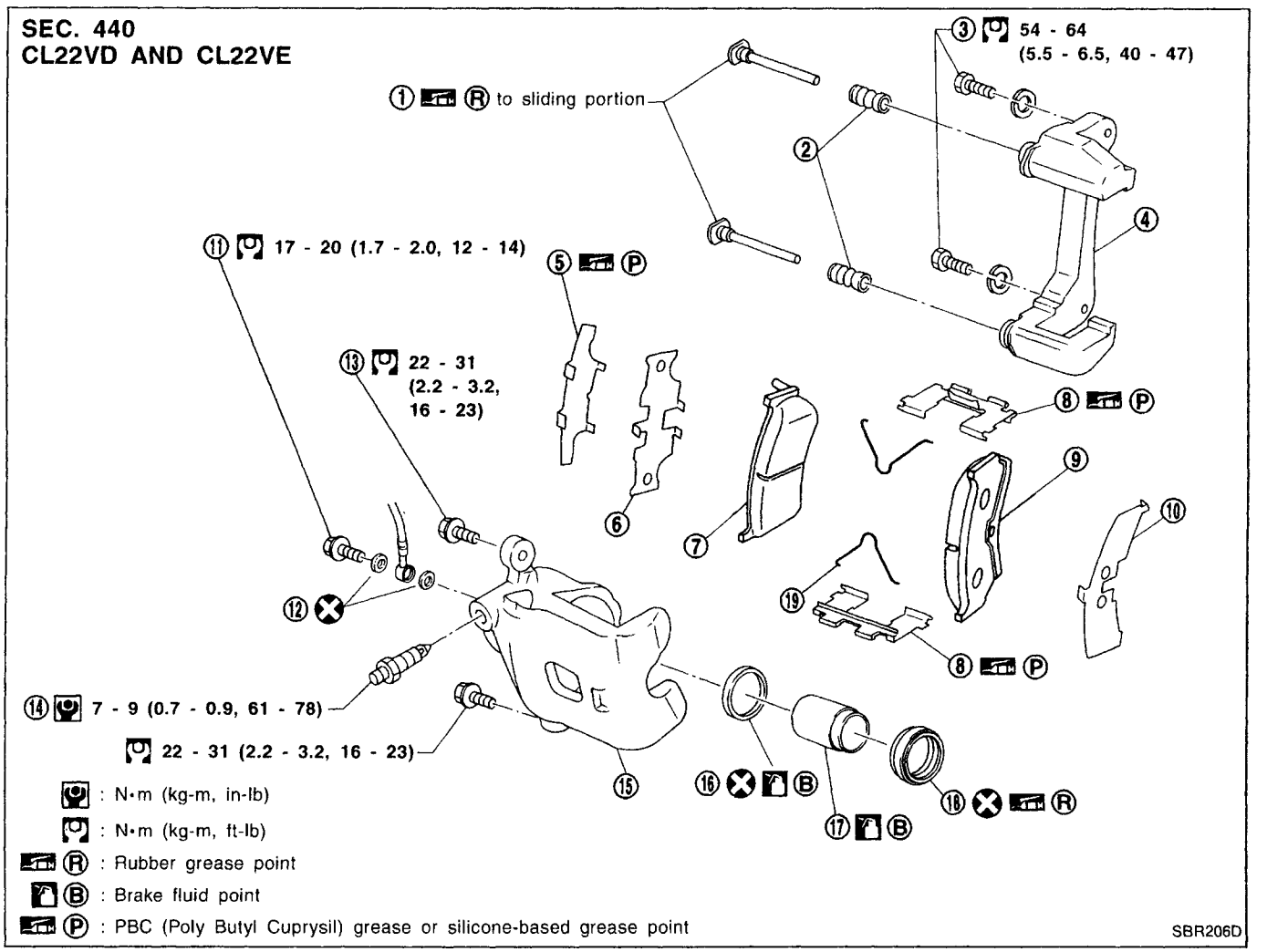

① Main pin
② Pin boot
③ Torque member fixing bolt
④ Torque member
⑤ Shim cover
⑥ Inner shim
⑦ Inner pad
⑧ Pad retainer
⑨ Outer pad
⑩ Outer shim
⑪ Connecting bolt
⑫ Copper washer
⑬ Main pin bolt
⑭ Bleed valve
⑮ Cylinder body
⑯ Piston seal
⑰ Piston
⑱ Piston boot
⑲ Pad return spring

Simpo PDF Merge and Split Unregistered Version - http://www.simpopdf.com

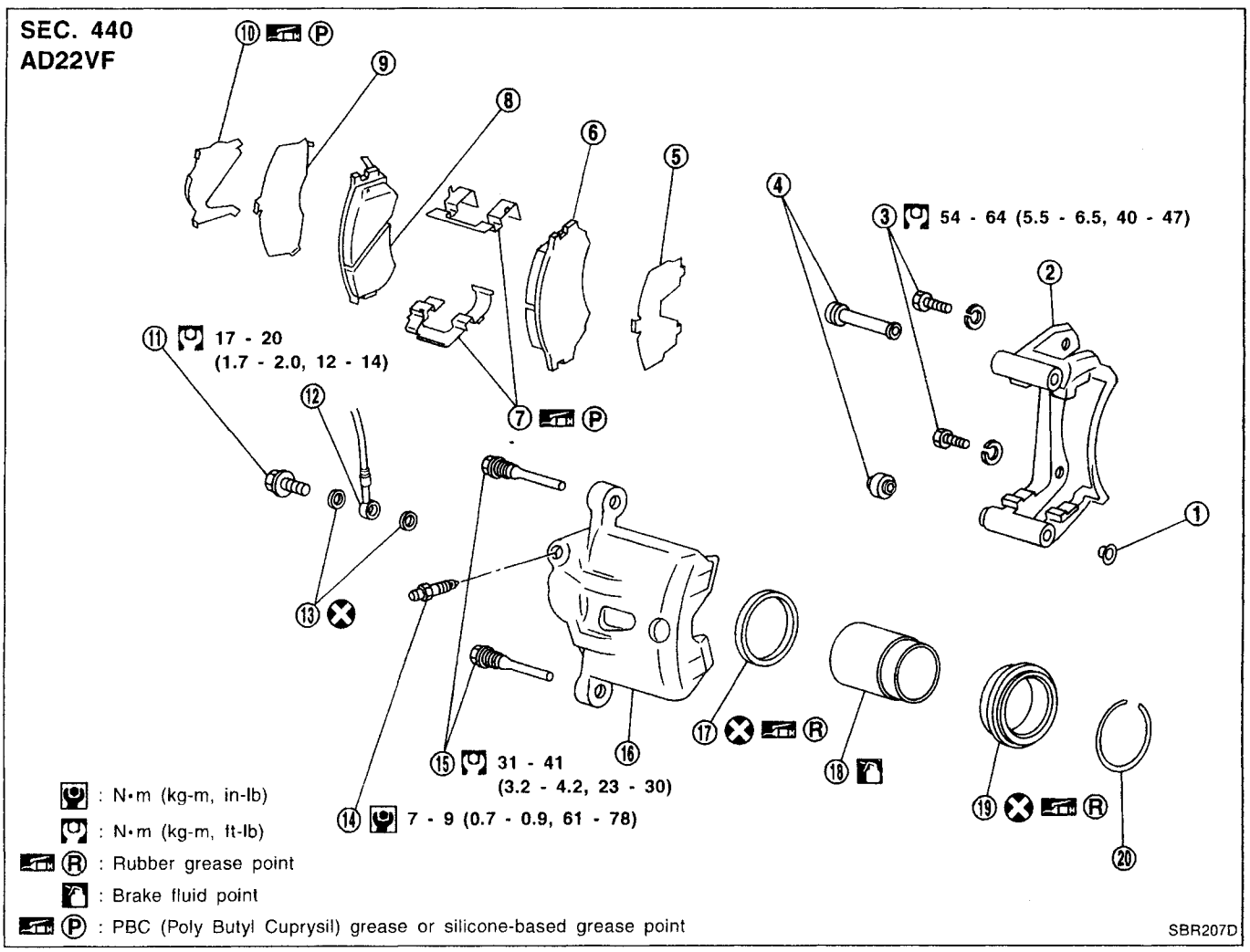

① Plug
② Torque member
③ Torque member fixing bolt
④ Pin boot
⑤ Outer shim
⑥ Outer pad
⑦ Pad retainer
⑧ Inner pad
⑨ Inner shim
⑩ Shim cover
⑪ Connecting bolt
⑫ Brake hose
⑬ Copper washer
⑭ Air bleeder
⑮ Main pin bolt
⑯ Cylinder body
⑰ Piston seal
⑱ Piston
⑲ Piston boot
⑳ Piston boot retainer

BR

Simpo PDF Merge and Split Unregistered Version - http://www.simpopdf.com

Removal

WARNING:
Clean brake pads with a vacuum dust collector to minimize the hazard of airborne asbestos or other materials.
CAUTION:
Suspend caliper assembly with wire so as not to stretch brake hose.

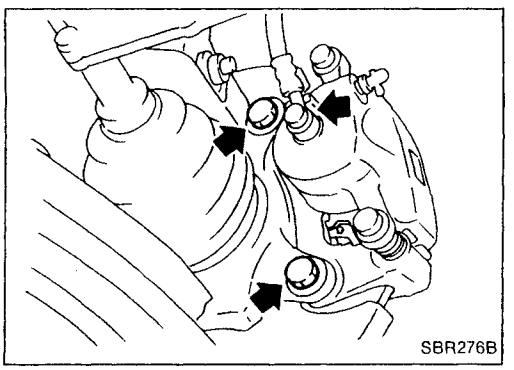
SBR276B

Remove torque member fixing bolts and connecting bolt.
It is not necessary to remove connecting bolt except for disassembly or replacement of caliper assembly. In this case, suspend caliper assembly with wire so as not to stretch brake hose.

Disassembly

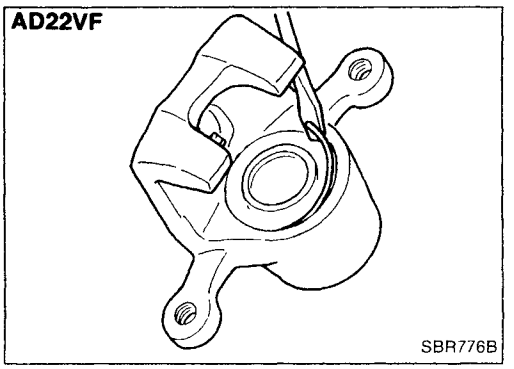
AD22VF
SBR776B

1. Remove piston boot retainer with a screwdriver.

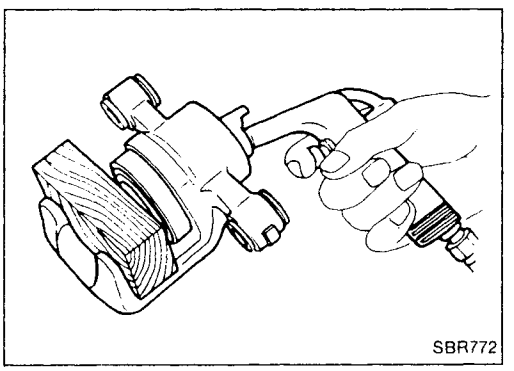
SBR772

WARNING:
Do not place your fingers in front of piston.
CAUTION:
Do not scratch or score cylinder wall.
2. Push out piston with dust seal with compressed air.
3. Remove piston seal with a suitable tool.

Inspection — Caliper

CYLINDER BODY

- Check inside surface of cylinder for score, rust, wear, damage or presence of foreign objects. If any of the above conditions are observed, replace cylinder body.
- Minor damage from rust or foreign objects may be eliminated by polishing surface with a fine emery paper. Replace cylinder body if necessary.

CAUTION:
Use brake fluid to clean. Never use mineral oil.

Simpo PDF Merge and Split Unregistered Version - http://www.simpopdf.com

Inspection — Caliper (Cont'd)

PISTON

Check piston for score, rust, wear, damage or presence of foreign objects. Replace if any of the above conditions are observed.

CAUTION:

Piston sliding surface is plated. Do not polish with emery paper even if rust or foreign objects are stuck to sliding surface.

SLIDE PIN, PIN BOLT AND PIN BOOT

Check for wear, cracks, rust or other damage. Replace if any of the above conditions are observed.

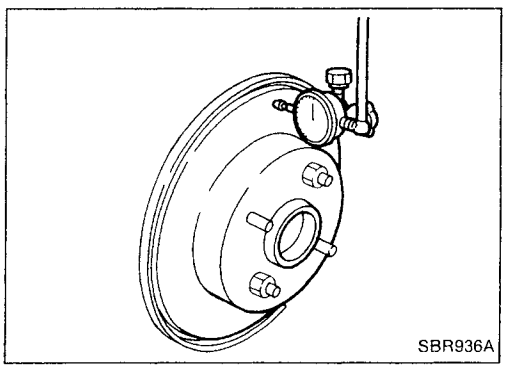
SBR936A

Inspection — Rotor

RUNOUT

1. Secure rotor to wheel hub with at least two nuts (M12 × 1.25).
2. Check runout using a dial indicator.

Make sure that wheel bearing axial end play is within the specifications before measuring. Refer to FA section ("Front Wheel Bearing", "ON-VEHICLE SERVICE").

Maximum runout:
0.07 mm (0.0028 in)

3. If the runout is out of specification, find minimum runout position as follows:
   a. Remove nuts and rotor from wheel hub.
   b. Shift the rotor one hole and secure rotor to wheel hub with nuts.
   c. Measure runout.
   d. Repeat steps a. to c. so that minimum runout position can be found.
4. If the runout is still out of specification, turn rotor with on-car brake lathe ("MAD, DL-8700", "AMMCO 700 and 705" or equivalent).

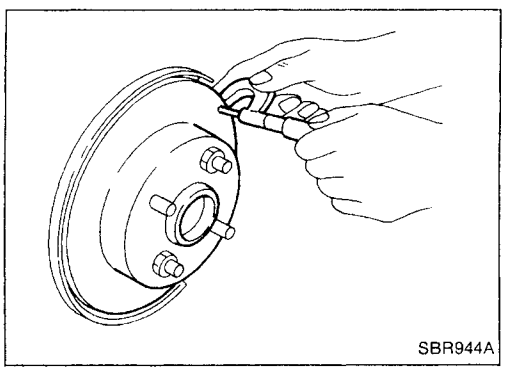
SBR944A

THICKNESS

Thickness variation (At least 8 positions):
Maximum 0.02 mm (0.0008 in)

If thickness variation exceeds the specification, turn rotor with on-car brake lathe.

Rotor repair limit:

CL22VD and CL22VE	**16.0 mm (0.630 in)**
CL22VF	**24.0 mm (0.945 in)**

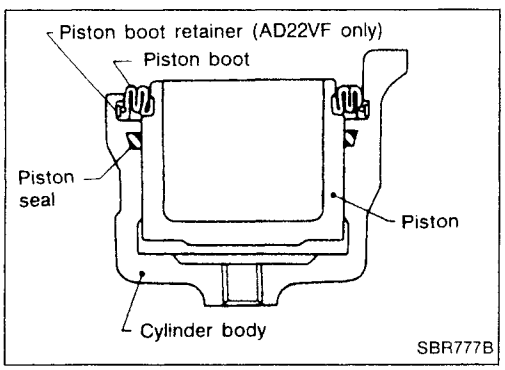

SBR777B

Assembly

1. With piston boot fitted to piston, insert piston boot into groove on cylinder body and install piston.
2. Properly secure piston boot.
3. Secure piston boot with retainer. (AD22VF model only)

Simpo PDF Merge and Split Unregistered Version - http://www.simpopdf.com

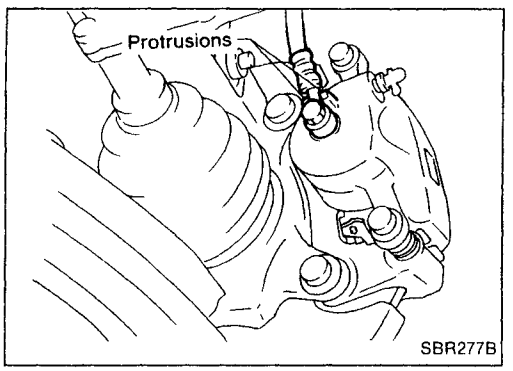

Installation

CAUTION:

- **Refill with new brake fluid "DOT 3" or "DOT 4".**
- **Never reuse drained brake fluid.**
- **Do not mix different types of brake fluids (DOT 3, DOT 4).**

1. Install caliper assembly.
2. Install brake hose to caliper securely.
3. Install all parts and secure all bolts.
4. Bleed air. Refer to "Bleeding Procedure", BR-6.

Simpo PDF Merge and Split Unregistered Version - http://www.simpopdf.com

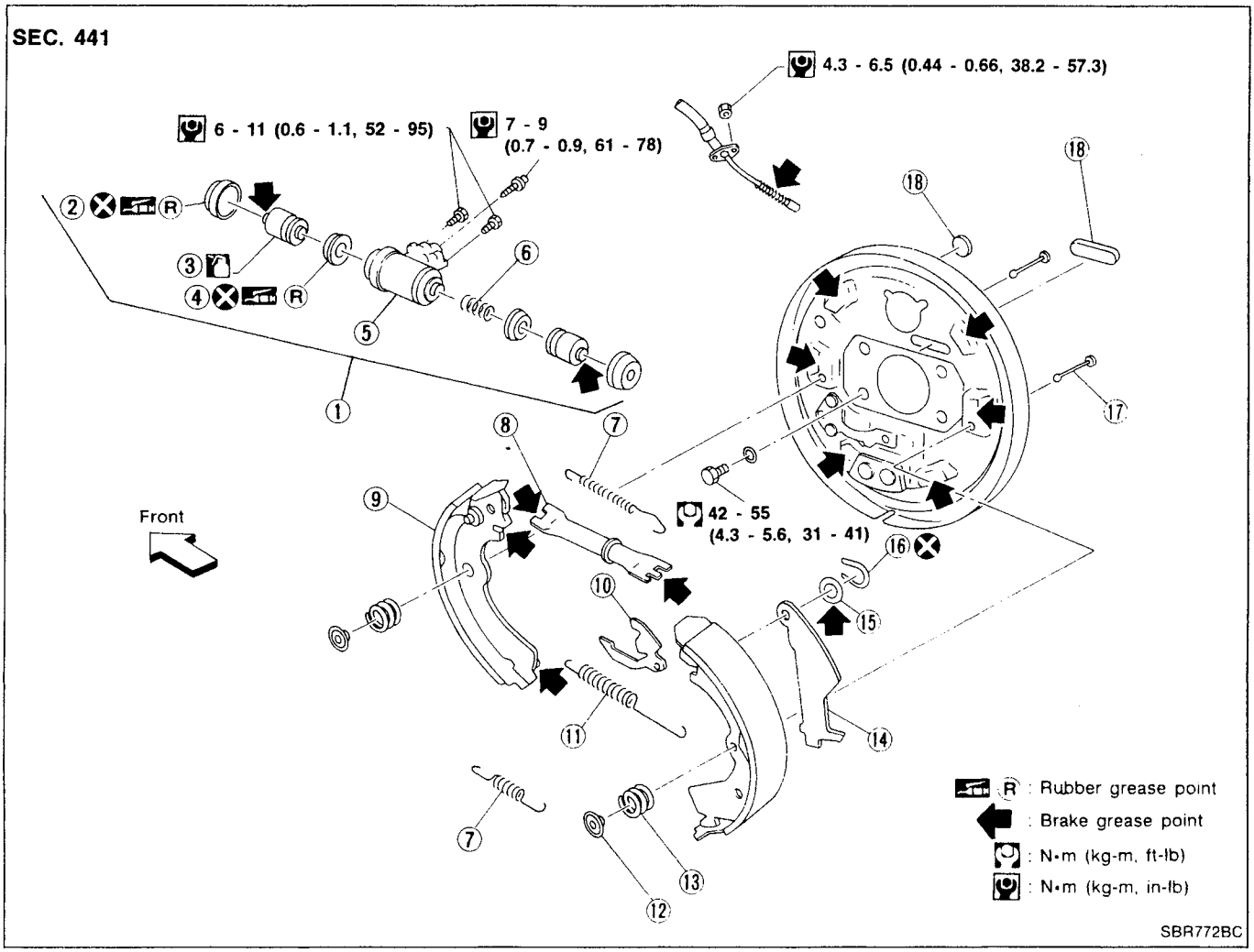

BR

① Wheel cylinder assembly
② Boot
③ Piston
④ Piston cup
⑤ Cylinder body
⑥ Spring
⑦ Return spring
⑧ Adjuster
⑨ Shoe
⑩ Adjuster lever
⑪ Adjuster spring
⑫ Retainer
⑬ Shoe hold-down spring
⑭ Toggle lever
⑮ Washer
⑯ Retainer ring
⑰ Shoe hold-down pin
⑱ Plug

Removal

WARNING:
Clean brake lining with a vacuum dust collector to minimize the hazard of airborne particles or other materials.
CAUTION:
Make sure parking brake lever is released completely.

Simpo PDF Merge and Split Unregistered Version - https://www.simpopdf.com

Removal (Cont'd)

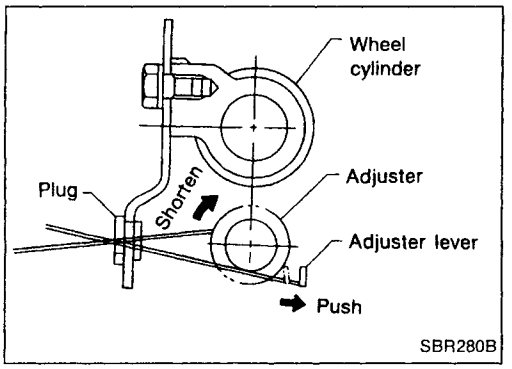

1. Release parking brake lever fully, then remove drum.

If drum is hard to remove, the following procedures should be carried out.

a. Remove plug. Then shorten adjuster to make clearance between brake shoe and drum as shown.

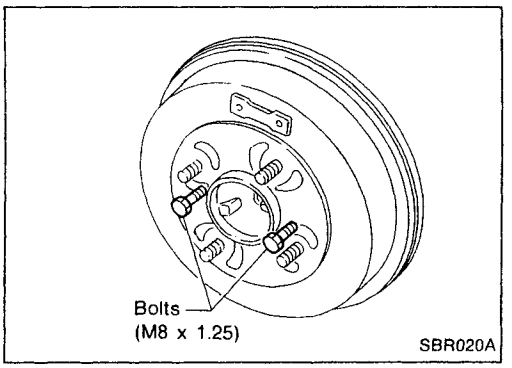

b. Tighten the two bolts gradually.

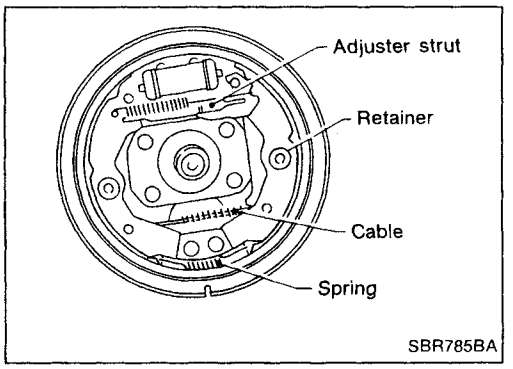

2. After removing retainer, remove spring by rotating shoes.
- **Be careful not to damage wheel cylinder piston boots.**
- **Be careful not to damage parking brake cable when separating it.**

3. Remove adjuster.
4. Disconnect parking brake cable from toggle lever.

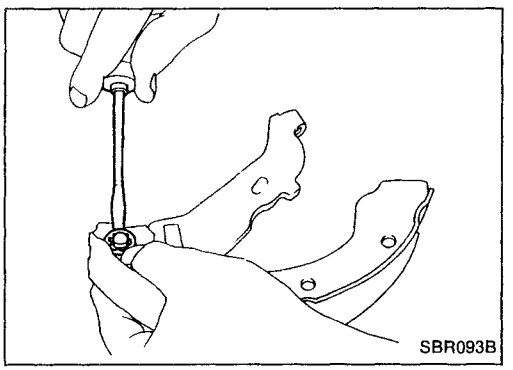

5. Remove retainer ring with a suitable tool. Then separate toggle lever and brake shoe.

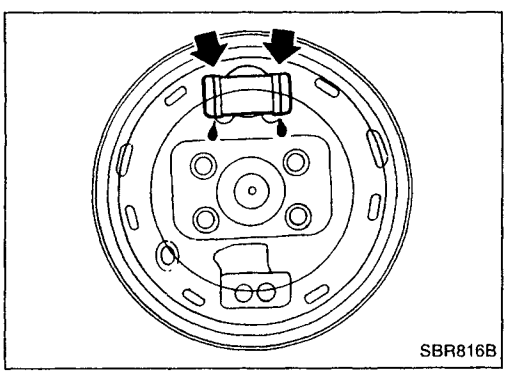

Inspection — Wheel Cylinder

- Check wheel cylinder for leakage.
- Check for wear, damage and loose conditions. Replace if any such condition exists.

Simpo PDF Merge and Split Unregistered Version - http://www.simpopdf.com

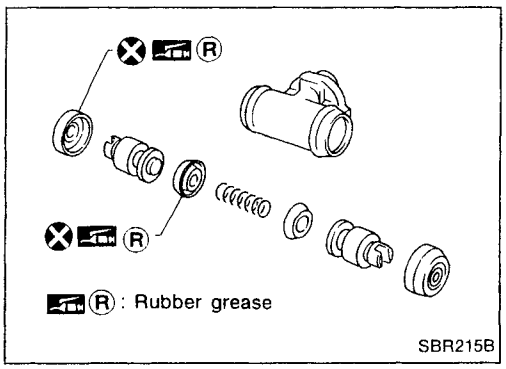

Wheel Cylinder Overhaul

- Check all internal parts for wear, rust and damage. Replace if necessary.
- Pay attention so as not to scratch cylinder when installing pistons.

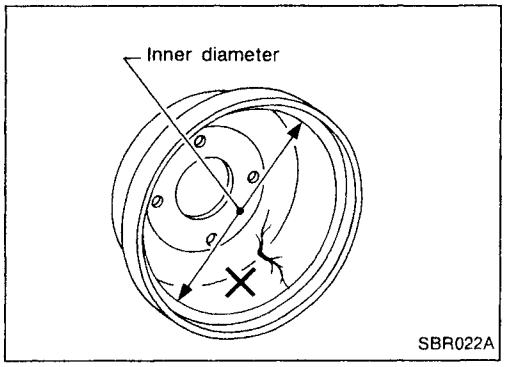

Inspection — Drum

Maximum inner diameter:
181 mm (7.13 in)
Out-of-roundness:
0.03 mm (0.0012 in) or less

- Contact surface should be fine finished with No. 120 to 150 emery paper.
- Using a drum lathe, lathe brake drum if it shows scoring, partial wear or stepped wear.
- After brake drum has been completely reconditioned or replaced, check drum and shoes for proper contact pattern.

BR

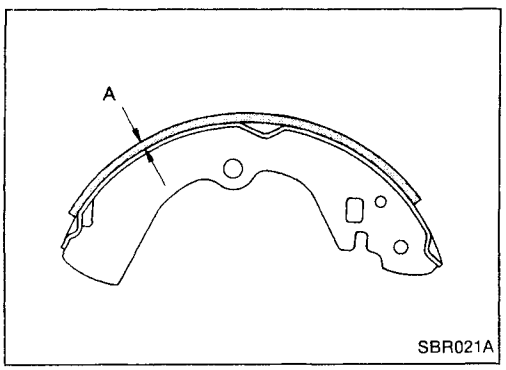

Inspection — Lining

Check lining thickness.

Standard lining thickness:
4.0 mm (0.157 in)
Lining wear limit (A):
1.5 mm (0.059 in)

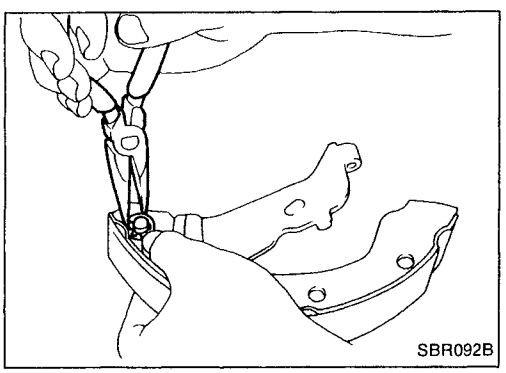

Installation

Always perform shoe clearance adjustment. Refer to "Adjustment" in "PARKING BRAKE CONTROL", BR-37.

1. Fit toggle lever to brake shoe with retainer ring.

Simpo PDF Merge and Split Unregistered Version - http://www.simpopdf.com

Installation (Cont'd)

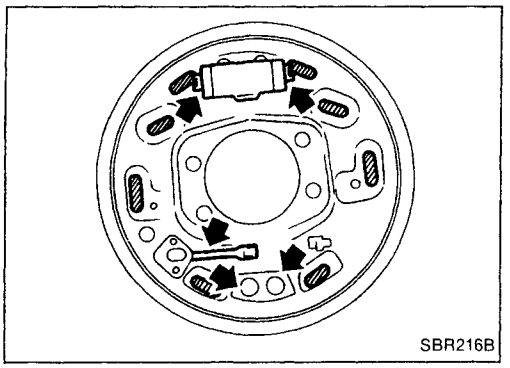
SBR216B

2. Apply brake grease to the contact areas shown at left.

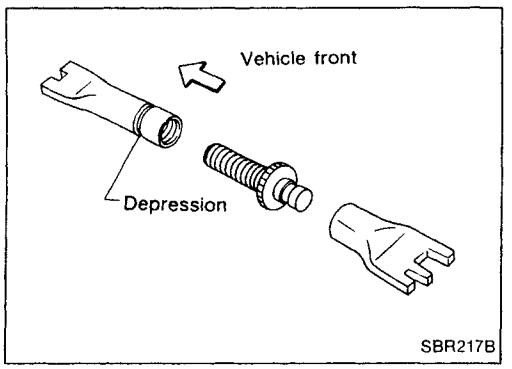

SBR217B

3. Shorten adjuster by rotating it.

- **Pay attention to direction of adjuster.**

Wheel	Screw	Depression
Left	Left-hand thread	Yes
Right	Right-hand thread	No

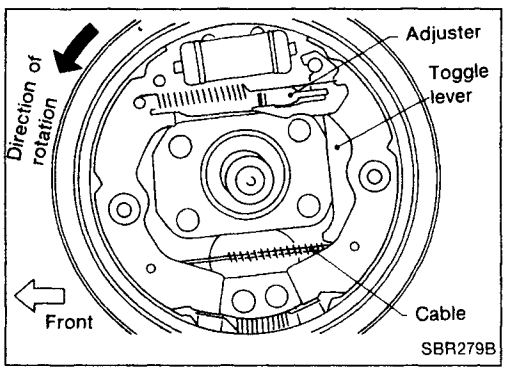

SBR279B

4. Connect parking brake cable to toggle lever.
5. Install all parts.

Be careful not to damage wheel cylinder piston boots.

6. Check all parts are installed properly.

Pay attention to direction of adjuster assembly.

7. Install brake drum.
8. When installing new wheel cylinder or overhauling wheel cylinder, bleed air. Refer to "Bleeding procedure", BR-6.
9. Adjust parking brake. Refer to BR-37.

Simpo PDF Merge and Split Unregistered Version - http://www.simpopdf.com

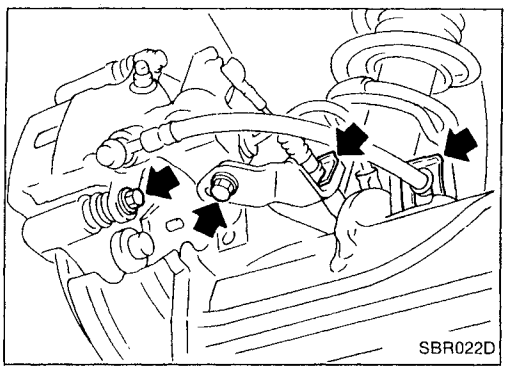
SBR022D

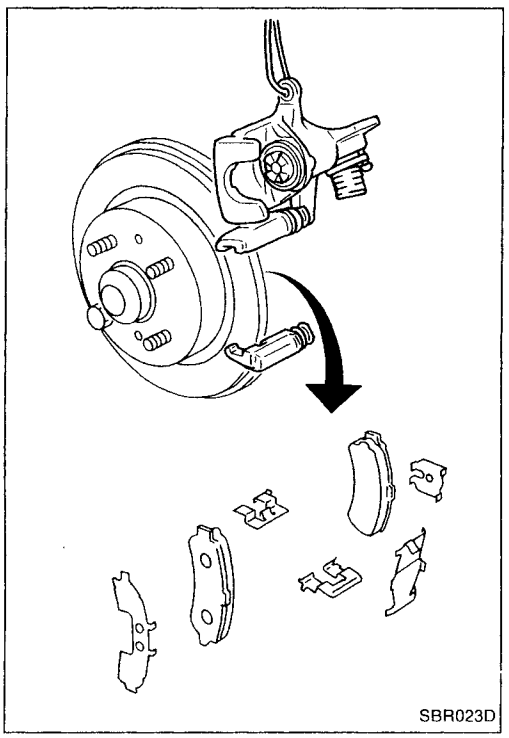
SBR023D

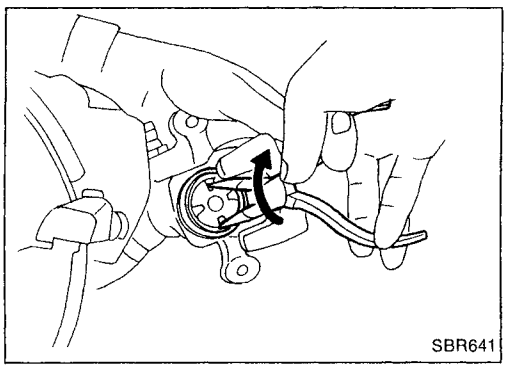
SBR641

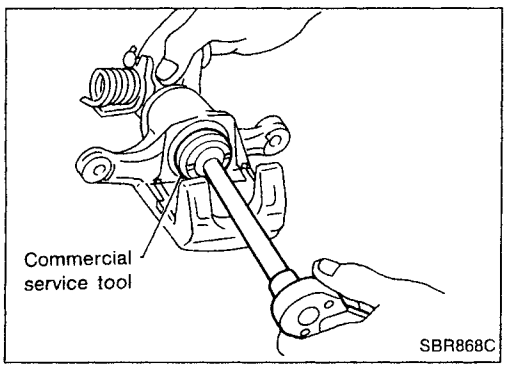

SBR868C

Pad Replacement

WARNING:

Clean brake pads with a vacuum dust collector to minimize the hazard of airborne particles or other materials.

CAUTION:

- **When cylinder body is open, do not depress brake pedal, otherwise piston will pop out.**
- **Be careful not to damage piston boot or get oil on rotor. Always replace shims when replacing pads.**
- **If shims are rusted or show peeling of rubber coat, replace them with new shims.**
- **It is not necessary to remove connecting bolt except for disassembly or replacement of caliper assembly. In this case, suspend cylinder body with wire so as not to stretch brake hose**
- **Carefully monitor brake fluid level because brake fluid will return to reservoir when pushing back piston.**

1. Remove master cylinder reservoir cap.
2. Remove brake cable lock spring.
3. Remove cable guide from caliper assembly.
4. Disconnect cable.
5. Remove lock spring from brake hose. Then remove brake hose from bracket.
6. Remove lower pin bolt.
7. Open cylinder body upward. Then remove pad retainers, and inner and outer shims.

   Standard pad thickness:
   10 mm (0.39 in)
   Pad wear limit:
   1.5 mm (0.059 in)

8. When installing new pads, push piston into cylinder body by turning piston clockwise.

Carefully monitor brake fluid level because brake fluid will return to reservoir when pushing back piston.

BR

Simpo PDF Merge and Split Unregistered Version - http://www.simpopdf.com

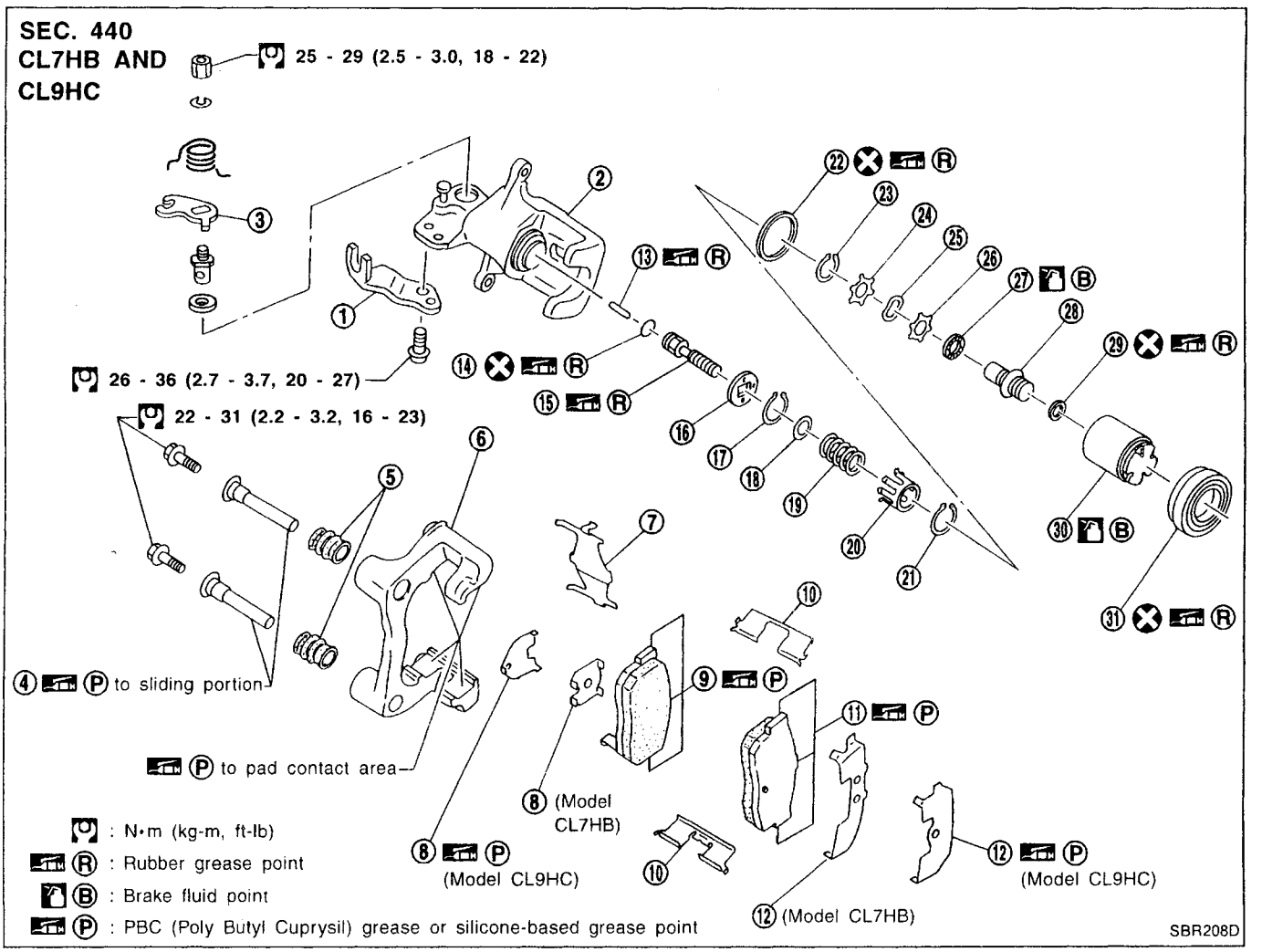

① Cable guide
② Cylinder
③ Toggle lever
④ Pin
⑤ Pin boot
⑥ Torque member
⑦ Retainer
⑧ Inner shim
⑨ Inner pad
⑩ Pad retainer
⑪ Outer pad
⑫ Outer shim
⑬ Strut
⑭ O-ring
⑮ Push rod
⑯ Key plate
⑰ Snap ring
⑱ Seat
⑲ Spring
⑳ Spring cover
㉑ Snap ring
㉒ Piston seal
㉓ Snap ring
㉔ Spacer
㉕ Wave washer
㉖ Spacer
㉗ Bearing
㉘ Adjuster
㉙ Cup
㉚ Piston
㉛ Piston boot

Simpo PDF Merge and Split Unregistered Version - http://www.simpopdf.com

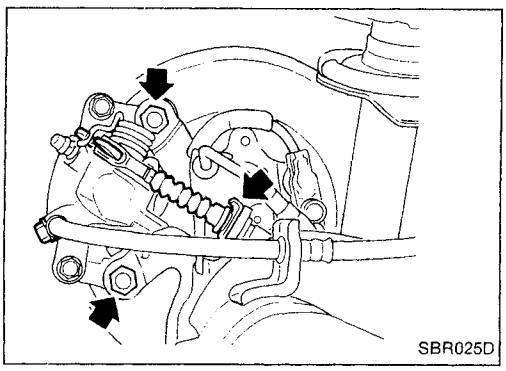
SBR025D

Removal

WARNING:

Clean brake pads with a vacuum dust collector to minimize the hazard of airborne particles or other materials.

1. Remove parking brake cable lock plate.
2. Remove torque member fixing bolts and connecting bolt.

It is not necessary to remove connecting bolt except for disassembly or replacement of caliper assembly. In this case, suspend caliper assembly with wire so as not to stretch brake hose.

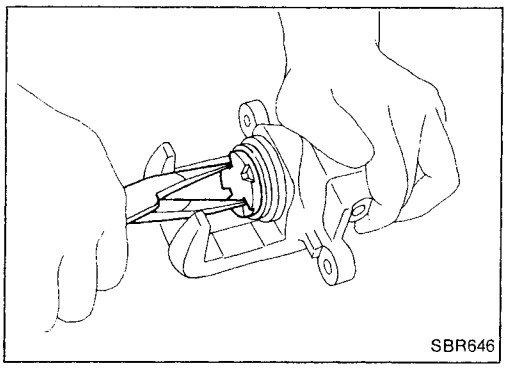
SBR646

Disassembly

1. Remove piston by turning it counterclockwise with suitable long nose pliers or commercial service tool.

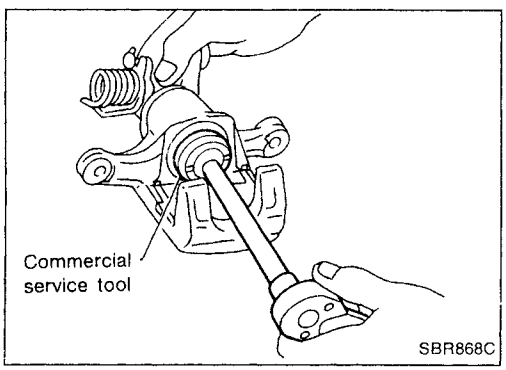

SBR868C

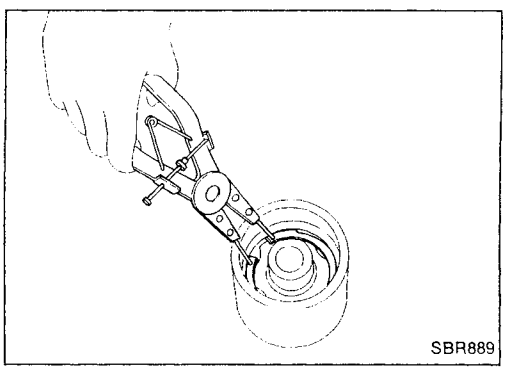
SBR889

2. Remove snap ring from piston with suitable pliers and remove adjusting nut.

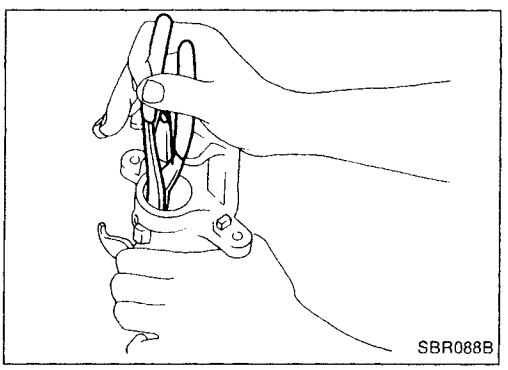
SBR088B

3. Disassemble cylinder body.

a. Pry off snap ring with suitable pliers, then remove spring cover, spring and seat.

b. Remove snap ring, then remove key plate, push rod, rod and strut.

Simpo PDF Merge and Split Unregistered Version - http://www.simpopdf.com

Disassembly (Cont'd)

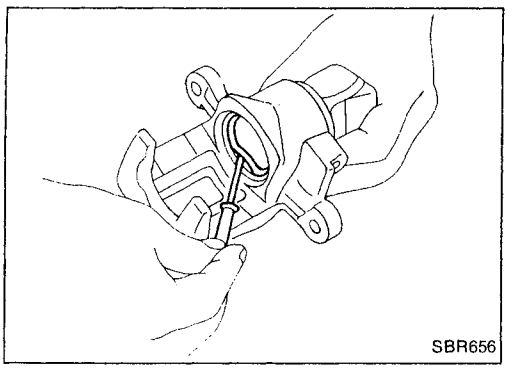
SBR656

c. Remove piston seal.
Be careful not to damage cylinder body.

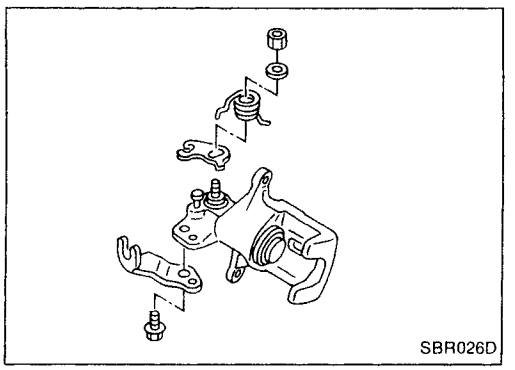
SBR026D

4. Remove return spring, toggle lever and cable guide.

Inspection — Caliper

CAUTION:
Use brake fluid to clean cylinder. Never use mineral oil.

CYLINDER BODY

- Check inside surface of cylinder for score, rust, wear, damage or presence of foreign objects. If any of the above conditions are observed, replace cylinder body.
- Minor damage from rust or foreign objects may be eliminated by polishing surface with a fine emery paper. Replace cylinder body if necessary.

TORQUE MEMBER

Check for wear, cracks or other damage. Replace if necessary.

PISTON

CAUTION:
Piston sliding surface is plated. Do not polish with emery paper even if rust or foreign objects is stuck to sliding surface.
Check piston for score, rust, wear, damage or presence of foreign objects. Replace if any of the above conditions are observed.

SLIDE PIN, PIN BOLT, AND PIN BOOT

Check for wear, cracks or other damage.
Replace if any of the above conditions are observed.

Simpo PDF Merge and Split Unregistered Version - http://www.simpopdf.com

Inspection — Rotor

RUBBING SURFACE

Check rotor for roughness, cracks or chips.

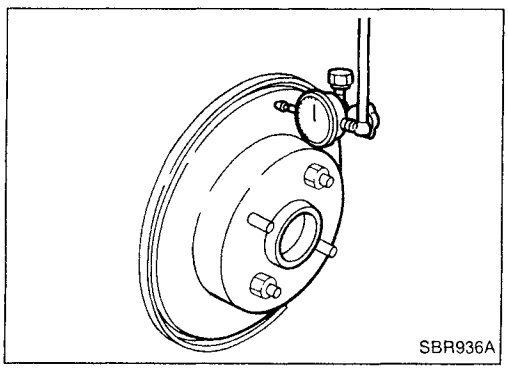
SBR936A

RUNOUT

1. Secure rotor to wheel hub with at least two nuts (M12 x 1.25).
2. Check runout using a dial indicator.

Make sure that wheel bearing axial end play is within the specifications before measuring. Refer to "Rear Wheel Bearing" of "ON-VEHICLE SERVICE" in RA section.

3. Change relative positions of rotor and wheel hub so that runout is minimized.

Maximum runout:
0.07 mm (0.0028 in)

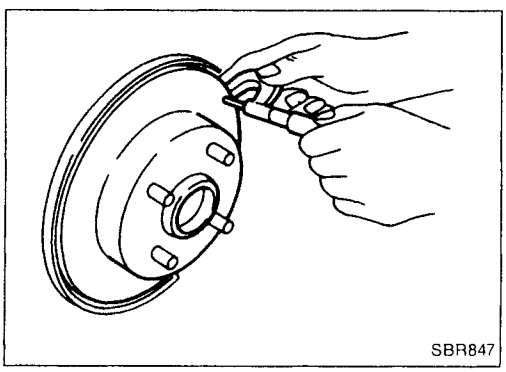
SBR847

THICKNESS

Rotor repair limit:
Minimum thickness
CL7HB 6.0 mm (0.236 in)
CL9HC 8.0 mm (0.315 in)
Thickness variation (At least 8 portions)
Maximum 0.02 mm (0.0008 in)

Replace rotor if any of the above do not meet the specifications.

BR

Assembly

1. Insert cam with depression facing towards open end of cylinder.

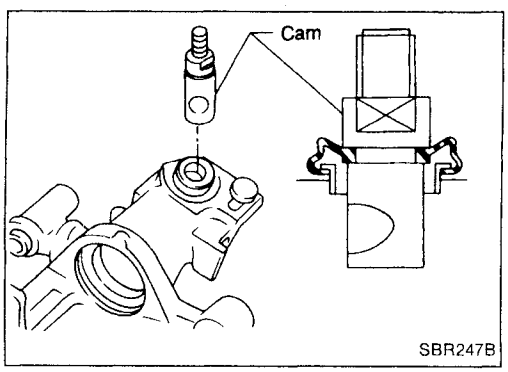

SBR247B

2. Generously apply rubber grease to strut and push rod to make insertion easy.

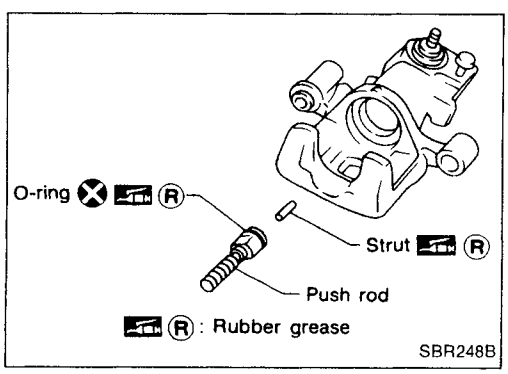

SBR248B

Simpo PDF Merge and Split Unregistered Version - http://www.simpopdf.com

Assembly (Cont'd)

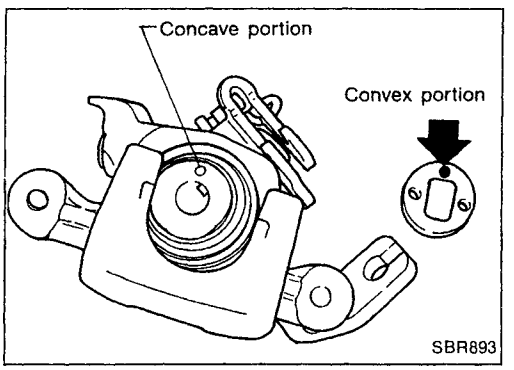

3. Match protrusion on key plate with depression in cylinder.

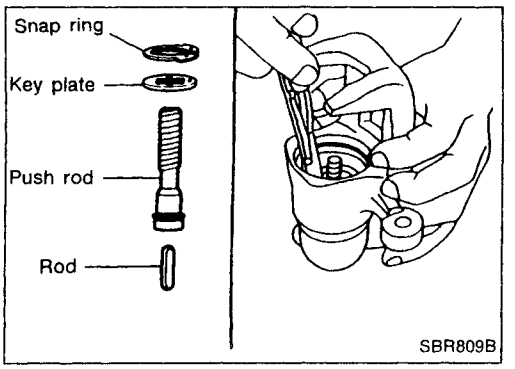

4. Install snap ring with a suitable tool.

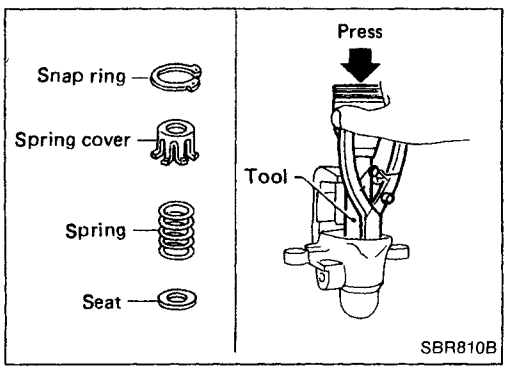

5. Install seat, spring, spring cover and snap ring while depressing with suitable tool.

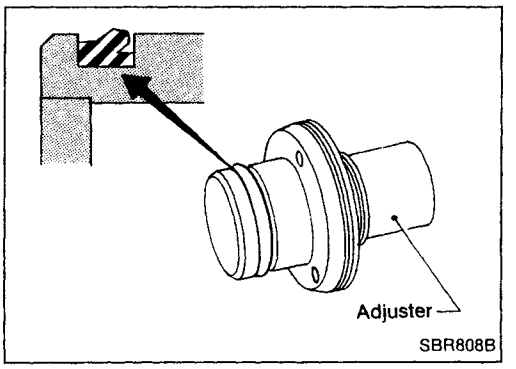

6. Install adjuster in the specified direction.

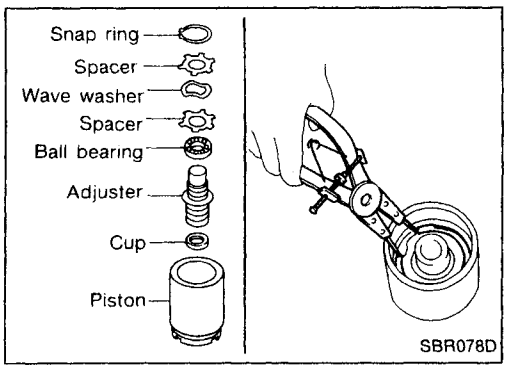

7. Install cup, adjuster, bearing, spacers, washers and snap ring with a suitable tool.

Simpo PDF Merge and Split Unregistered Version - http://www.simpopdf.com

Assembly (Cont'd)

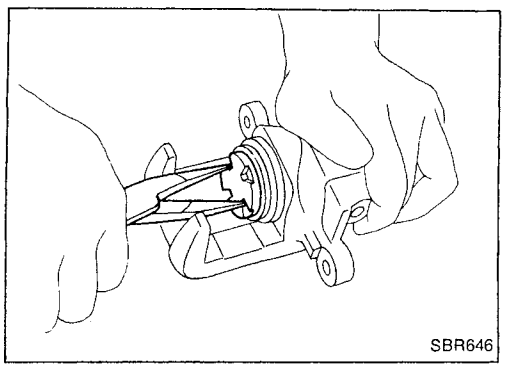
SBR646

8. Insert piston seal into groove on cylinder body.
9. With piston boot fitted to piston, insert piston boot into groove on cylinder body and fit piston by turning it clockwise with long nose pliers, or suitable tool.

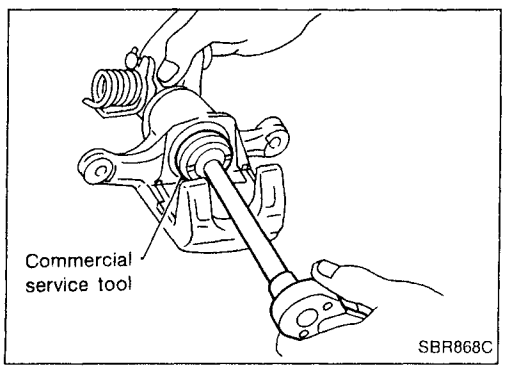

SBR868C

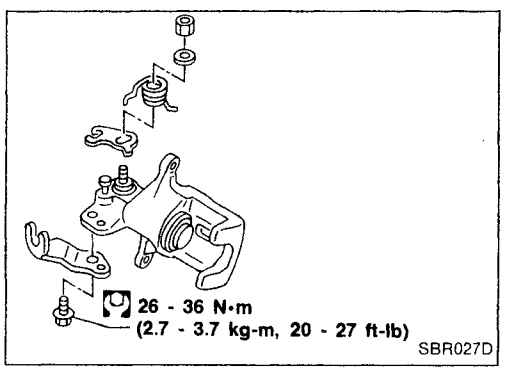

SBR027D

10. Fit toggle lever, return spring and cable guide.

Installation

CAUTION:

- **Refill with new brake fluid "DOT 3" or "DOT 4".**
- **Never reuse drained brake fluid.**
- **Do not mix different types of brake fluids (DOT 3, DOT 4).**

1. Install caliper assembly.
2. Install brake hose to caliper securely.
3. Install all parts and secure all bolts.
4. Bleed air. Refer to "Bleeding Procedure", BR-6.

Simpo PDF Merge and Split Unregistered Version - http://www.simpopdf.com

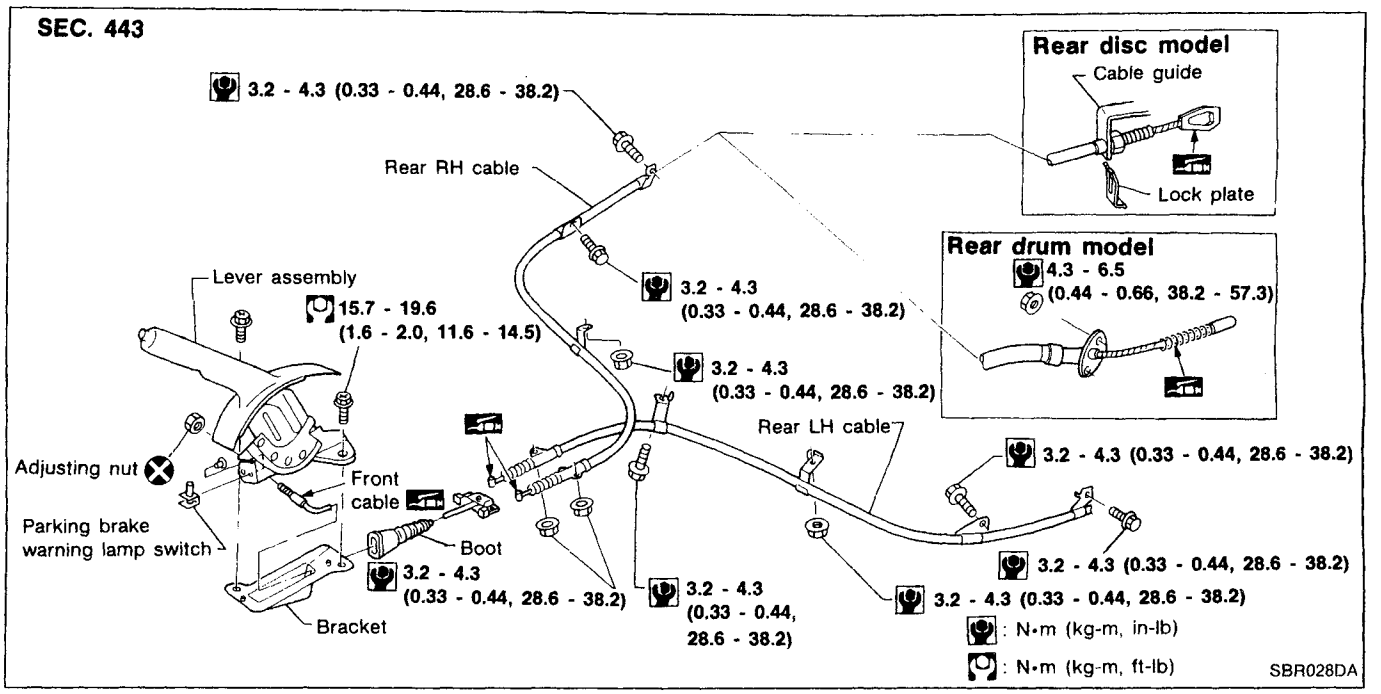

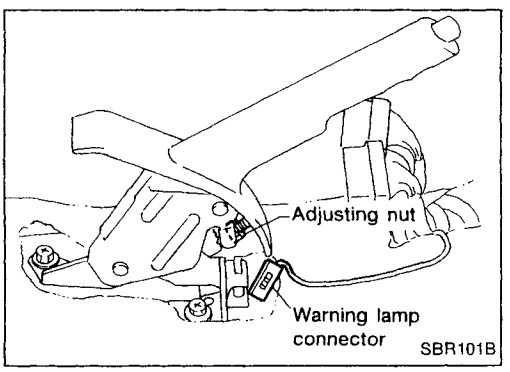

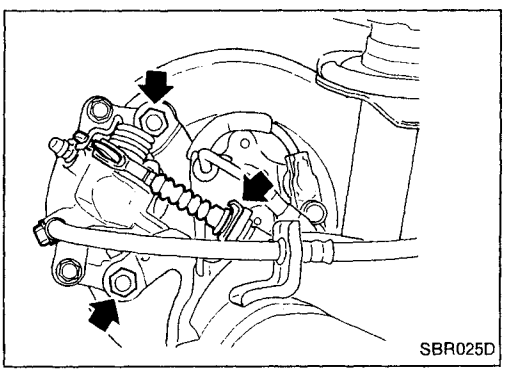

Removal and Installation

1. To remove parking brake cable, first remove center console.
2. Disconnect warning lamp connector.
3. Remove bolts, slacken off and remove adjusting nut.
4. Remove lock plate and disconnect cable (disc brake only). For drum brake models, refer to BR-25.

Inspection

1. Check control lever for wear or other damage. Replace if necessary.
2. Check wires for discontinuity or deterioration. Replace if necessary.
3. Check warning lamp and switch. Replace if necessary.
4. Check parts at each connecting portion and, if deformed or damaged, replace.

Simpo PDF Merge and Split Unregistered Version - http://www.simpopdf.com

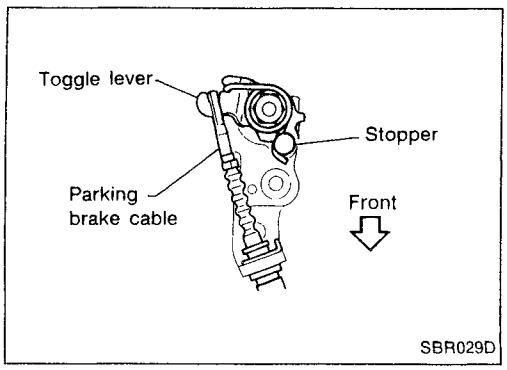

Adjustment

Before or after adjustment, pay attention to the following points.

a. For rear disc brake be sure that toggle lever returns to stopper when parking brake lever is released.
b. There is no drag when parking brake lever is released.

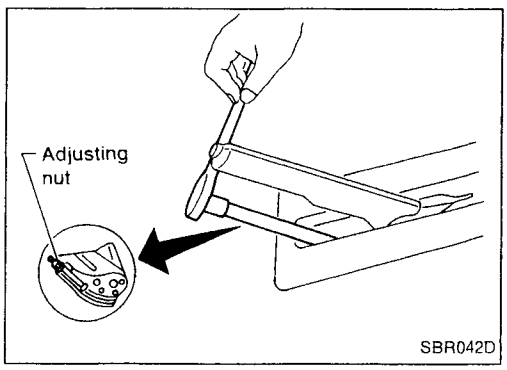

1. Adjust clearance between shoe and drum/pad and rotor as follows:
a. Release parking brake lever and loosen adjusting nut.
b. Depress brake pedal fully at least 10 times with engine running.
2. Pull control lever 4 - 5 notches. Then adjust control lever by turning adjusting nut.

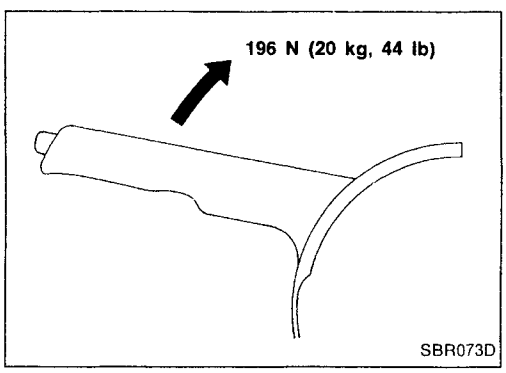

3. Pull control lever with specified amount of force. Check lever stroke and ensure smooth operation.
Number of notches:
Drum brake: 7 - 8
Disc brake: 8 - 9

4. Bend warning lamp switchplate to ensure following. Warning lamp comes on when lever is pulled "A" notches and goes out when fully released.
Number of "A" notches : 1 or less

BR

Simpo PDF Merge and Split Unregistered Version - http://www.simpopdf.com

Purpose

The Anti-Lock Brake System (ABS) consists of electronic and hydraulic components. It allows for control of braking force so that locking of the wheels can be avoided.
The ABS:
1) Improves proper tracking performance through steering wheel operation.
2) Eases obstacles to be avoided through steering wheel operation.
3) Improves vehicle stability by preventing flat spins.

Operation

- When the vehicle speed is less than 10 km/h (6 MPH) this system does not work.
- The Anti-Lock Brake System (ABS) has self-test capabilities. The system turns on the ABS warning light for 1 second after turning the ignition switch ON. The system performs another test the first time the vehicle reaches 6 km/h (4 MPH). A mechanical noise may be heard as the ABS performs a self-test. This is a normal part of the self-test feature. If a malfunction is found during this check, the ABS warning light will come on.
- During ABS operation, a mechanical noise may be heard. This is a normal condition.

ABS Hydraulic Circuit

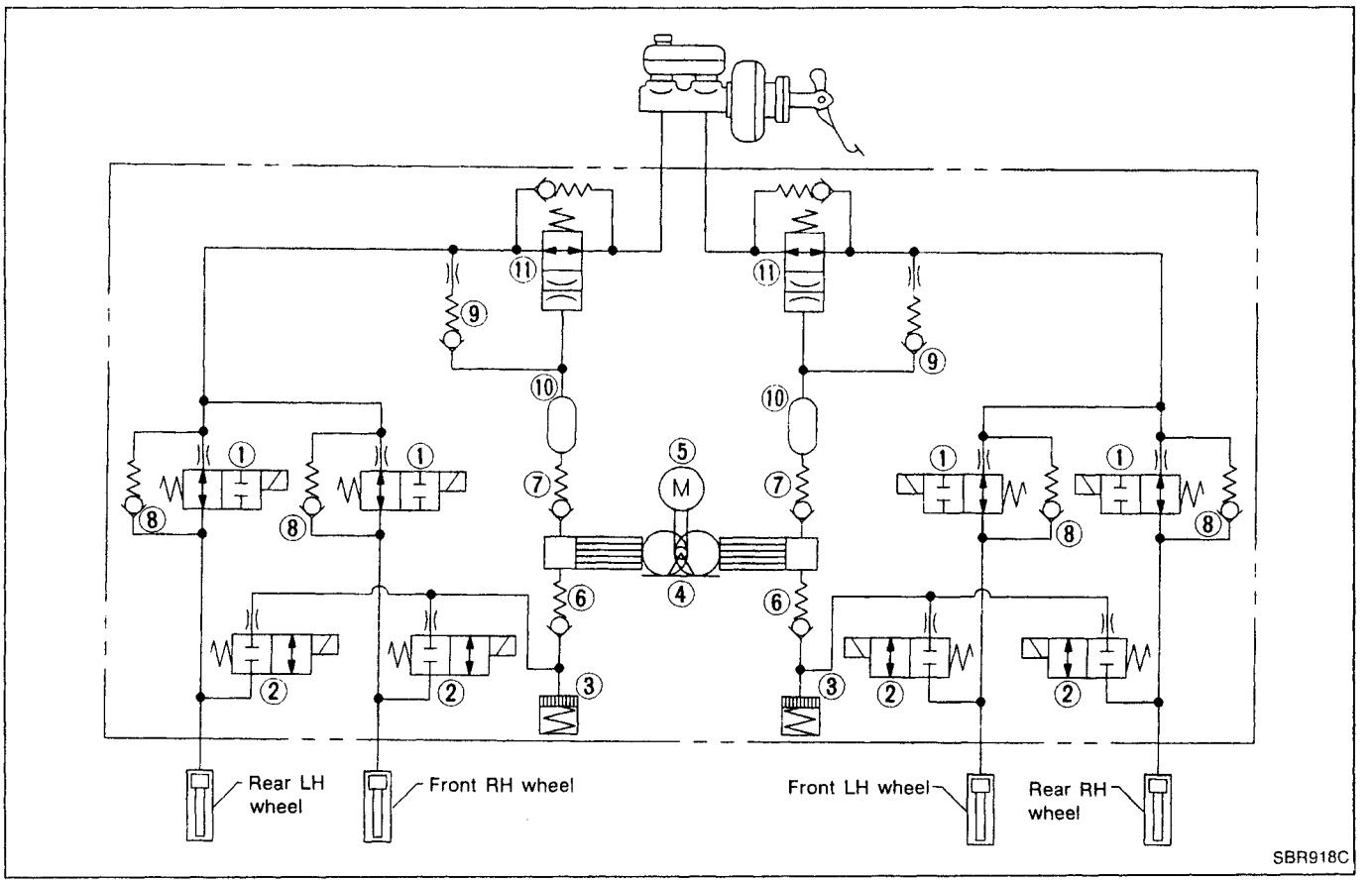

① Inlet solenoid valve
② Outlet solenoid valve
③ Reservoir
④ Pump
⑤ Motor
⑥ Inlet valve
⑦ Outlet valve
⑧ Bypass check valve
⑨ Check valve
⑩ Damper
⑪ Gradient switch

Simpo PDF Merge and Split Unregistered Version - http://www.simpopdf.com

System Components

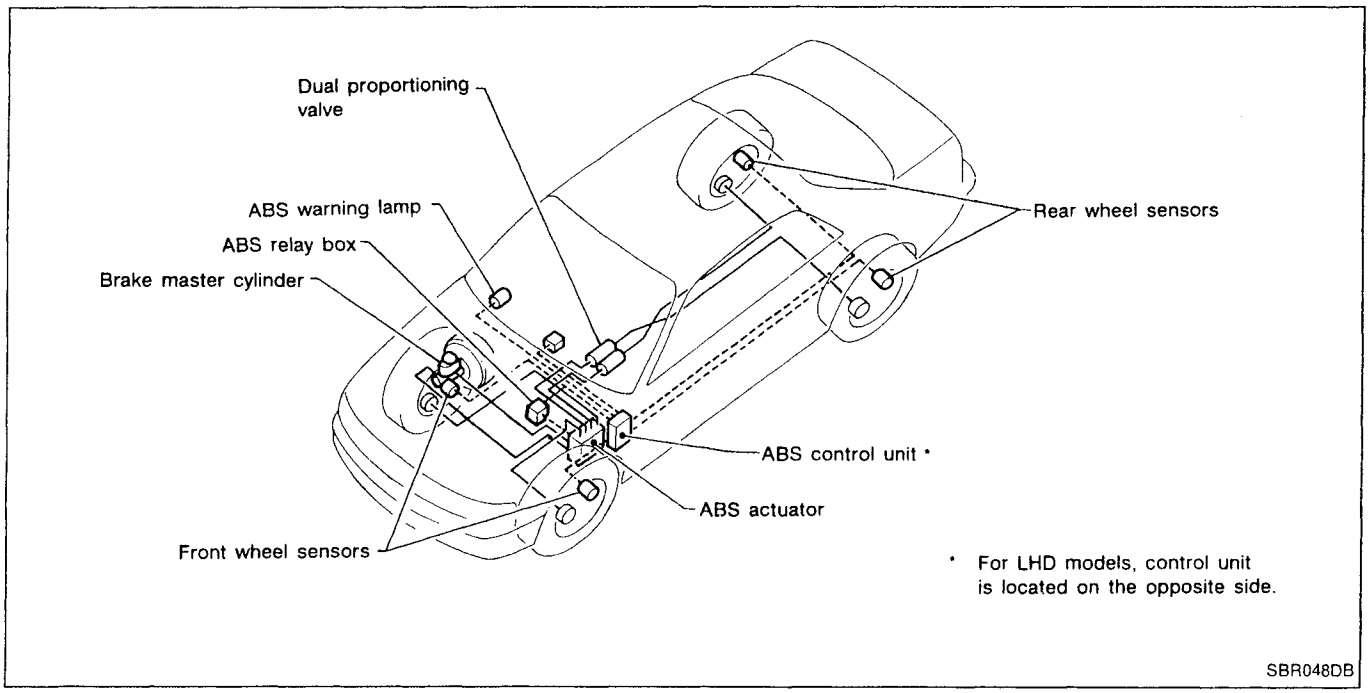

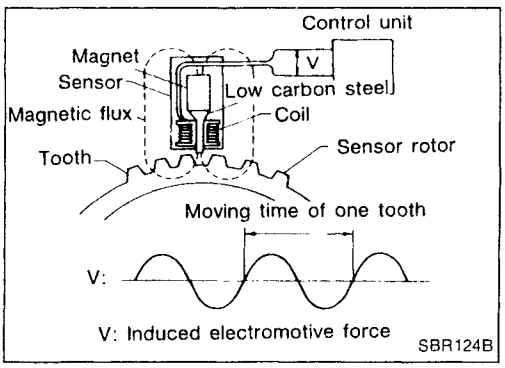

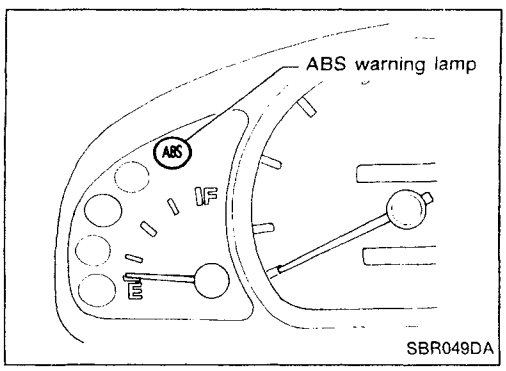

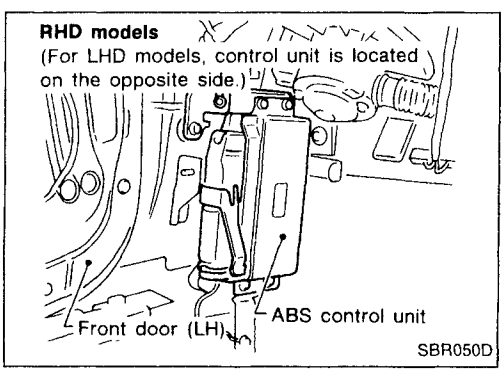

System Description

SENSOR

The sensor unit consists of a gear-shaped sensor rotor and a sensor element. The element contains a bar magnet around which a coil is wound. The sensor is installed on the back side of the brake rotor. Sine-wave current is generated by the sensor as the wheel rotates. The frequency and voltage increase(s) as the rotating speed increases.

CONTROL UNIT

The control unit computes the wheel rotating speed by the signal current sent from the sensor. Then it supplies a DC current to the actuator solenoid valve. It also controls ON-OFF operation of the valve relay and motor relay. If any electrical malfunction should be detected in the system, the control unit causes the warning lamp to light up. In this condition, the ABS will be deactivated by the control unit, and the vehicle's brake system reverts to normal operation.

Simpo PDF Merge and Split Unregistered Version - http://www.simpopdf.com

Removal and Installation

CAUTION:
Be careful not to damage sensor edge and sensor rotor teeth. When removing the front or rear wheel hub assembly, disconnect the ABS wheel sensor from the assembly and move it away.

FRONT WHEEL SENSOR

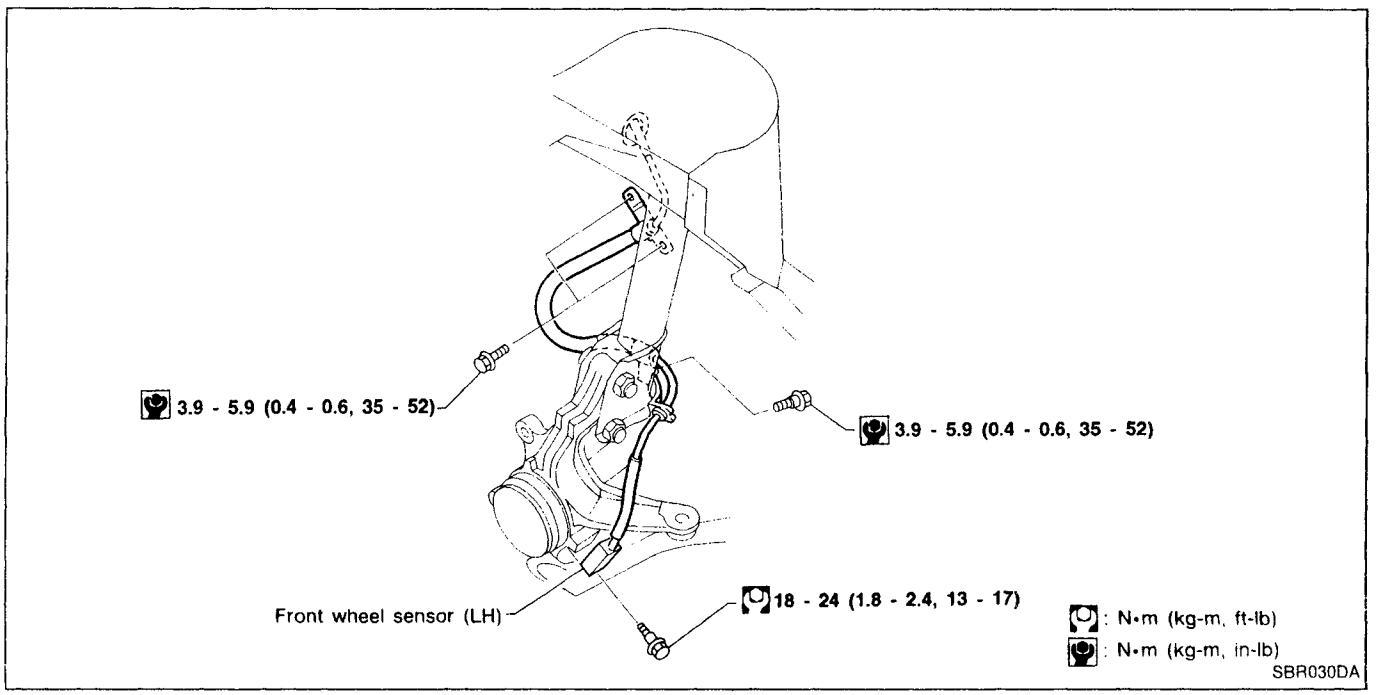

REAR WHEEL SENSOR

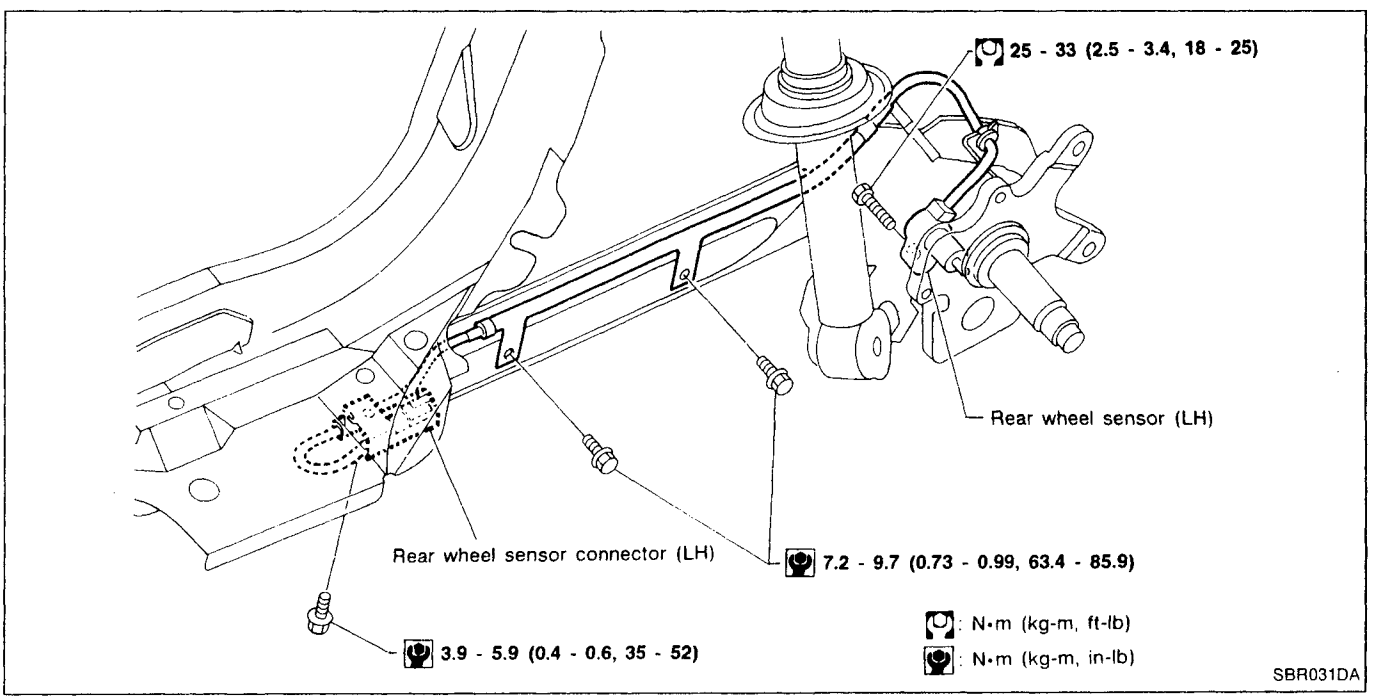

Simpo PDF Merge and Split Unregistered Version - http://www.simpopdf.com

Removal and Installation (Cont'd)

SENSOR ROTOR

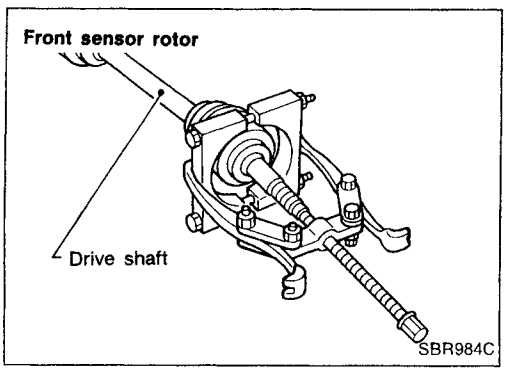

Removal

1. Remove the drive shaft and rear wheel hub. Refer to FA section ("Drive Shaft", FRONT AXLE") and RA section ("Wheel Hub", REAR AXLE").
2. Remove the sensor rotor using suitable puller, drift and bearing replacer.

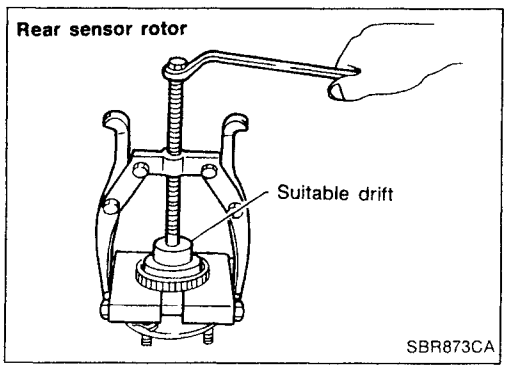

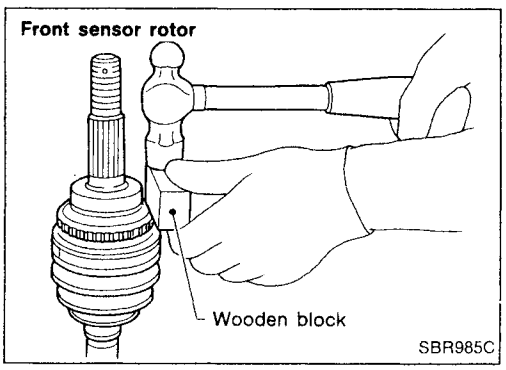

Installation

Install the sensor rotor. For front sensor rotor, use hammer and wooden block. For rear sensor rotor, use suitable drift and press.

- Always replace sensor rotor with new one.

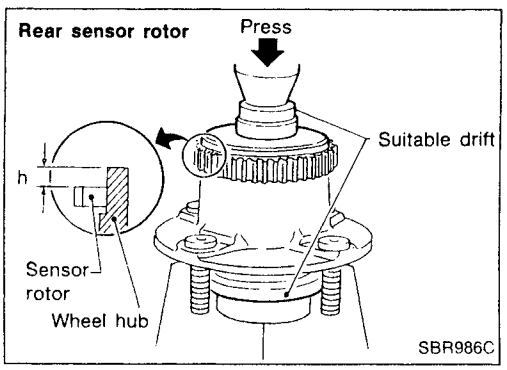

- Pay attention to the dimension of rear sensor rotor as shown in figure.
  h: 4.5 - 5.5 mm (0.177 - 0.217 in)

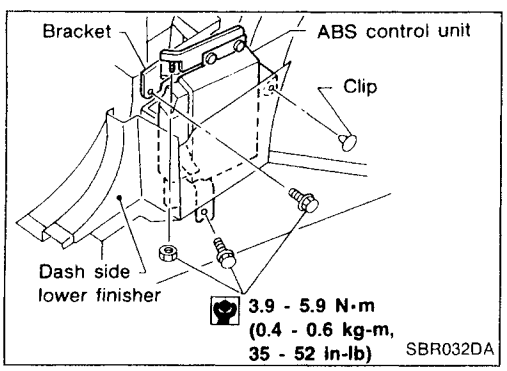

CONTROL UNIT

Location: Passenger side, behind dash side lower finisher.

- **Make sure that the sensor shield ground cable is secured with mounting bolt.**

Simpo PDF Merge and Split Unregistered Version - http://www.simpopdf.com

Removal and Installation (Cont'd)

ABS ACTUATOR

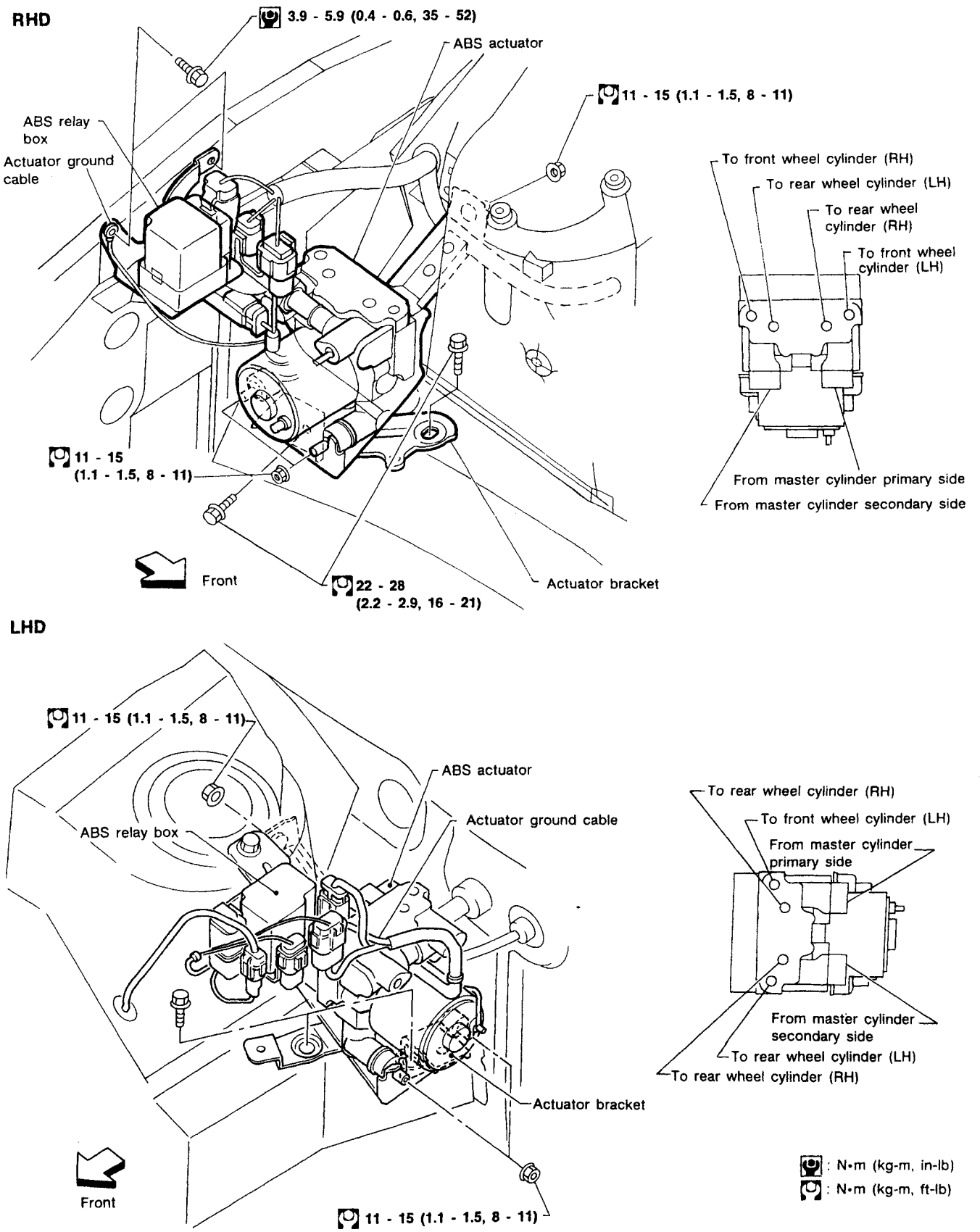

SBR033DA

Simpo PDF Merge and Split Unregistered Version - http://www.simpopdf.com

Removal and Installation (Cont'd)

1. Disconnect battery cable.
2. Drain brake fluid. Refer to BR-5.
3. Discharge air conditioner refrigerant. Refer to HA section ("R-134a Service Procedure", "SERVICE PROCEDURES").

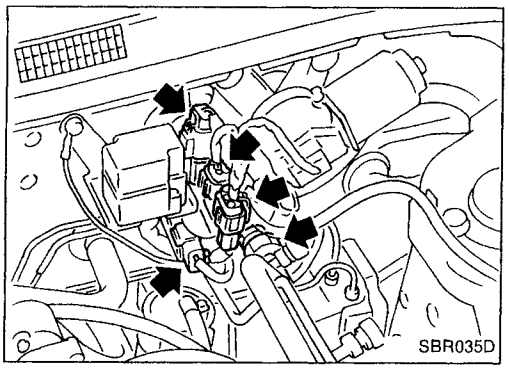

4. Disconnect all connectors from ABS relay bracket.

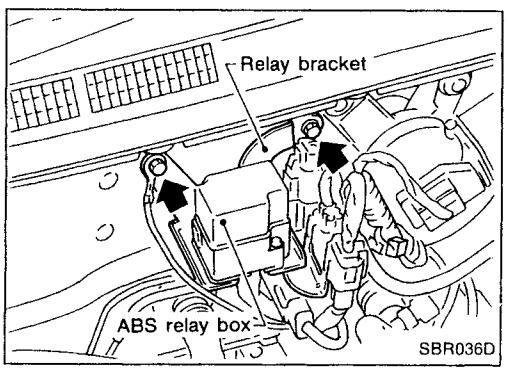

5. Remove mounting bolt for relay bracket.
6. Remove ABS relay box with bracket.
7. Remove air conditioner low-pressure tubes. Refer to HA section, ("Refrigerant Lines", "SERVICE PROCEDURES").

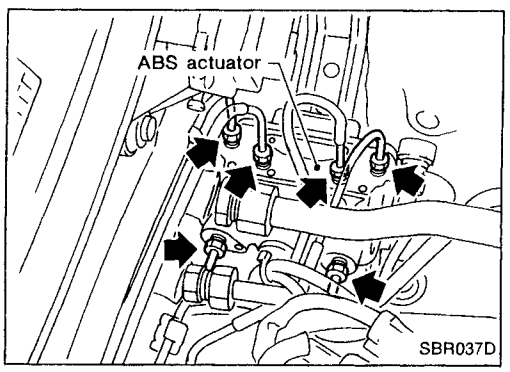

8. Disconnect brake pipes and move away from actuator.
It is not necessary to remove these pipes from vehicle.

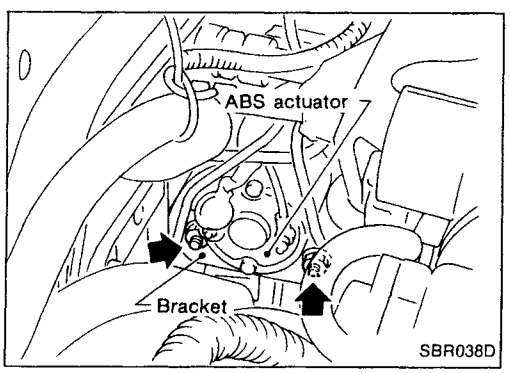

9. Remove/loosen mounting nuts between actuator and bracket.

Simpo PDF Merge and Split Unregistered Version - http://www.simpopdf.com

Removal and Installation (Cont'd)

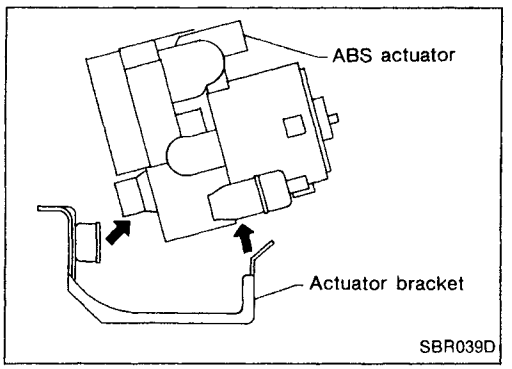

10. Draw out ABS actuator as shown.

CAUTION:
After installation, pay attention to the following points:

- **Refill brake fluid and bleed air. Refer to "CHECK AND ADJUSTMENT", BR-5 and "AIR BLEEDING", BR-6, respectively.**
- **Charge air conditioner refrigerant. Refer to HA section, ("R-134a Service Procedure", "SERVICE PROCEDURES").**

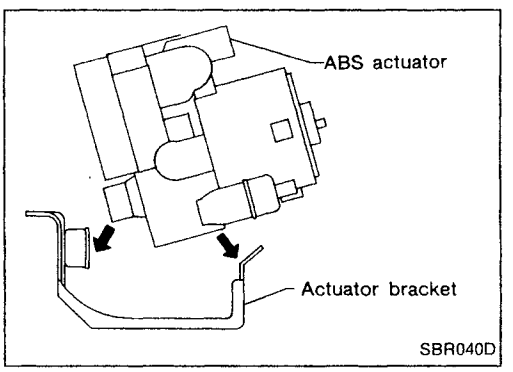

- The installation procedure is the reverse of removal.

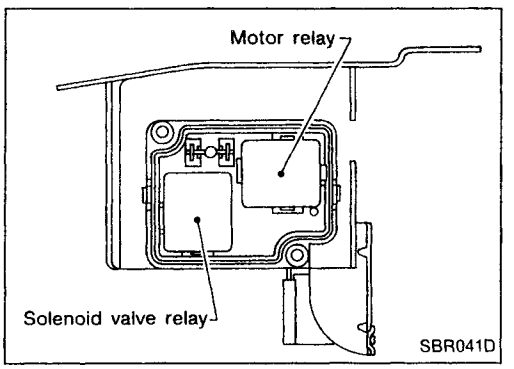

ABS RELAYS

1. Disconnect battery cable.
2. Remove ABS relay cover.

Simpo PDF Merge and Split Unregistered Version - http://www.simpopdf.com

Wiring Diagram — ABS —

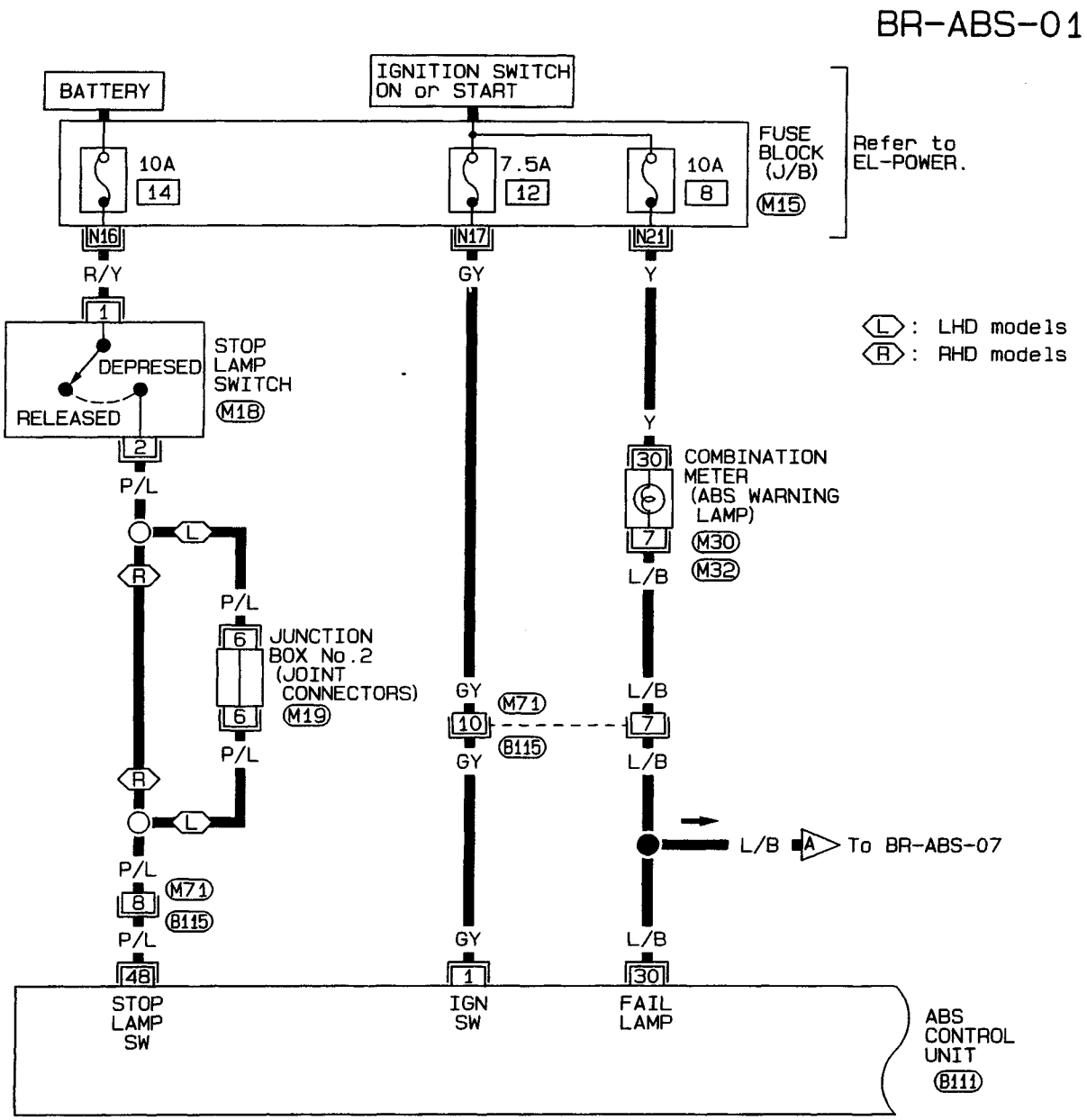

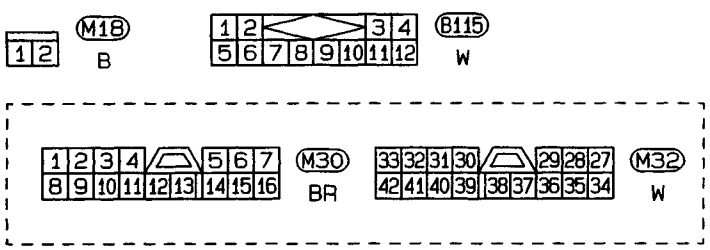

Refer to last page (Foldout page).

M15
M19
B111

BR

HBR002

Simpo PDF Merge and Split Unregistered Version - http://www.simpopdf.com

Wiring Diagram — ABS — (Cont'd)

BR-ABS-02

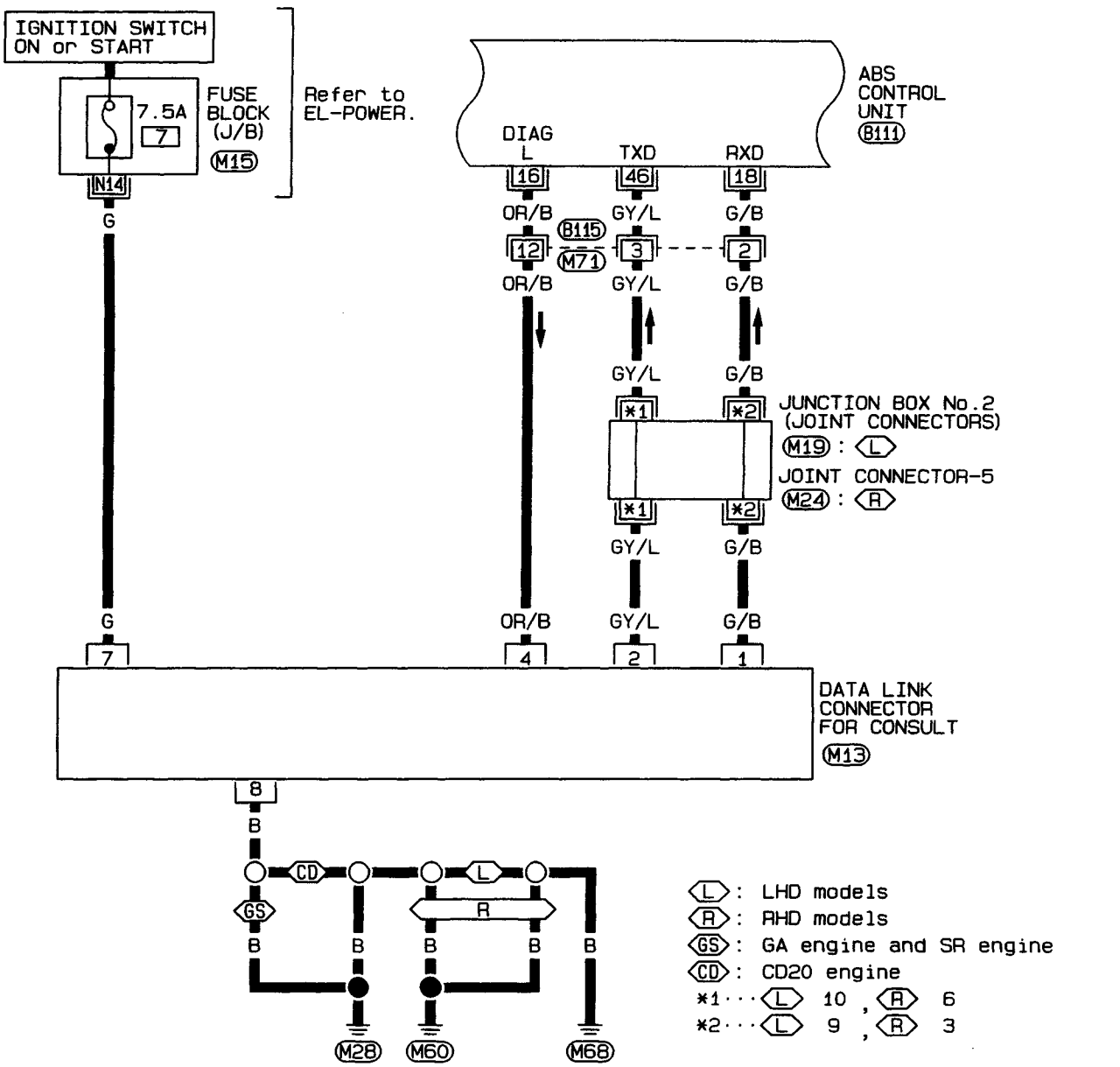

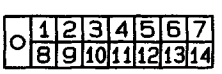



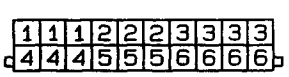

Refer to last page (Foldout page).

M15
M19
B111

HBR003

Simpo PDF Merge and Split Unregistered Version - http://www.simpopdf.com

Wiring Diagram — ABS — (Cont'd)

BR-ABS-03

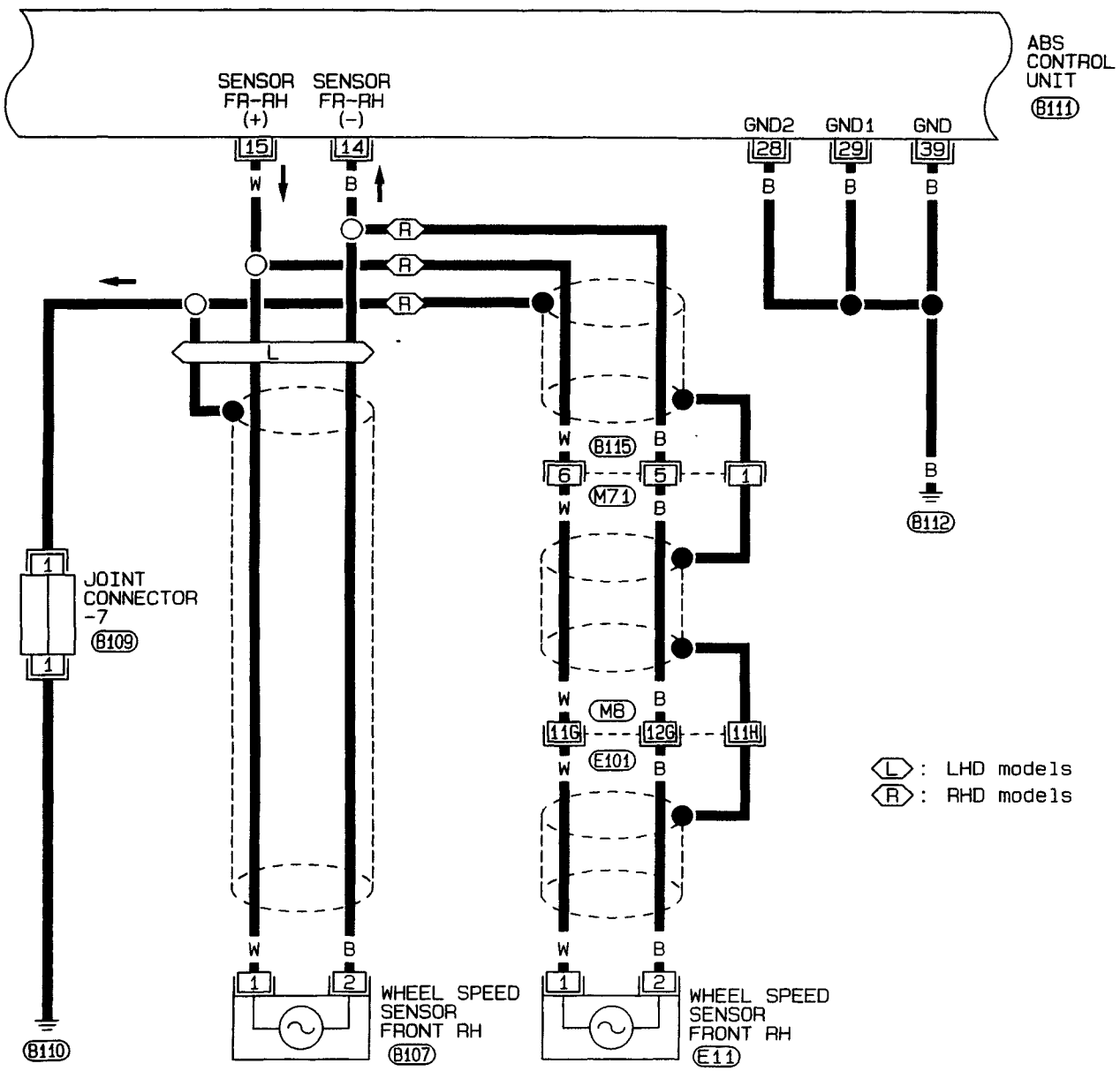

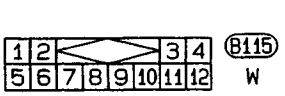

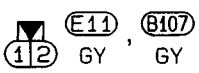



Refer to last page (Foldout page).

M8, E101
B111

BR

HBR004

Simpo PDF Merge and Split Unregistered Version - http://www.simpopdf.com

Wiring Diagram — ABS — (Cont'd)

BR-ABS-04

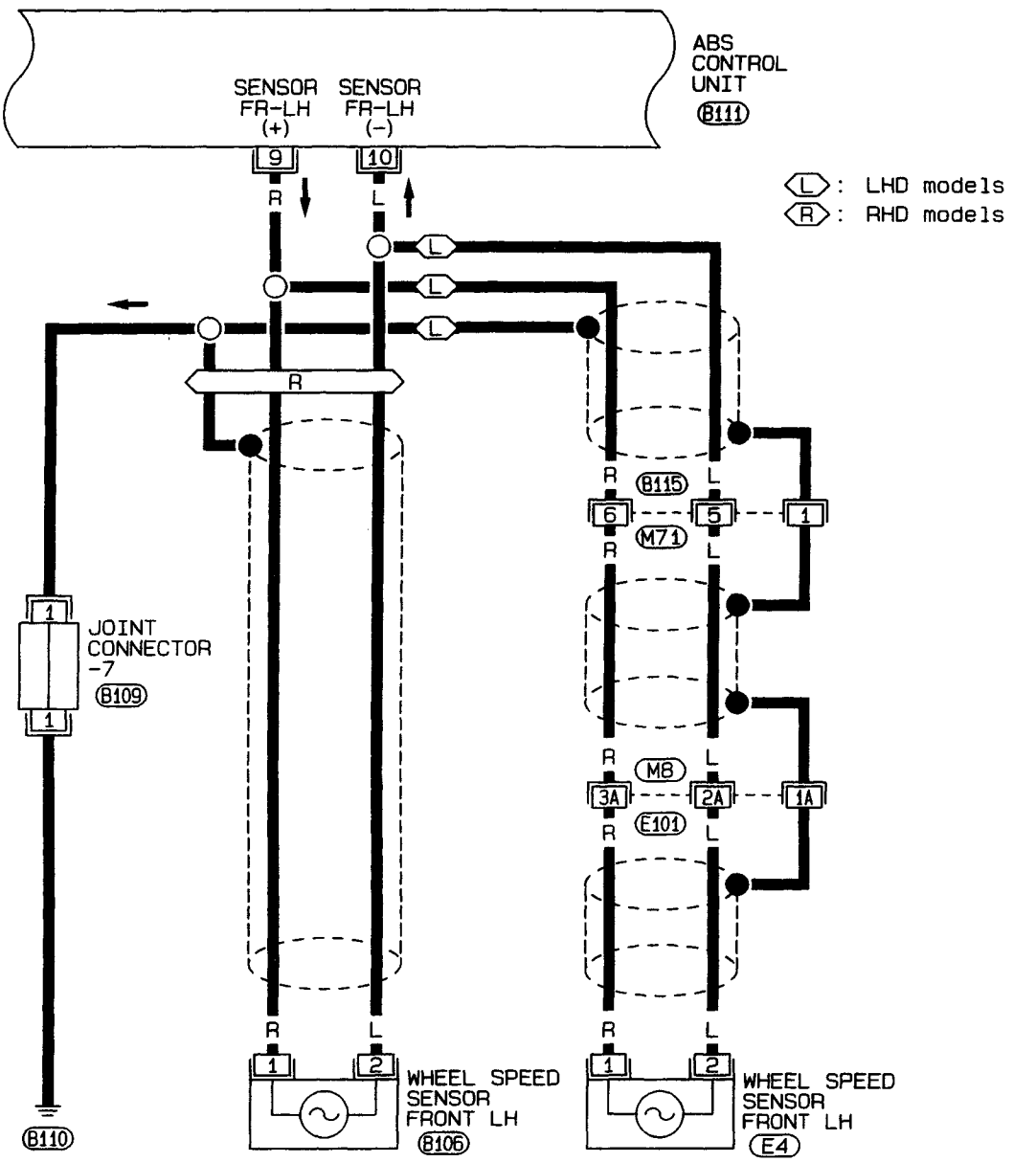

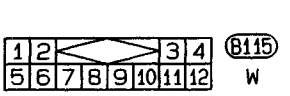

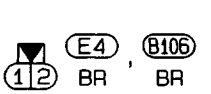

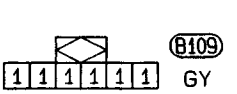

Refer to last page (Foldout page).

M8, E101

B111

HBR005

Simpo PDF Merge and Split Unregistered Version - http://www.simpopdf.com

Wiring Diagram — ABS — (Cont'd)

BR-ABS-05

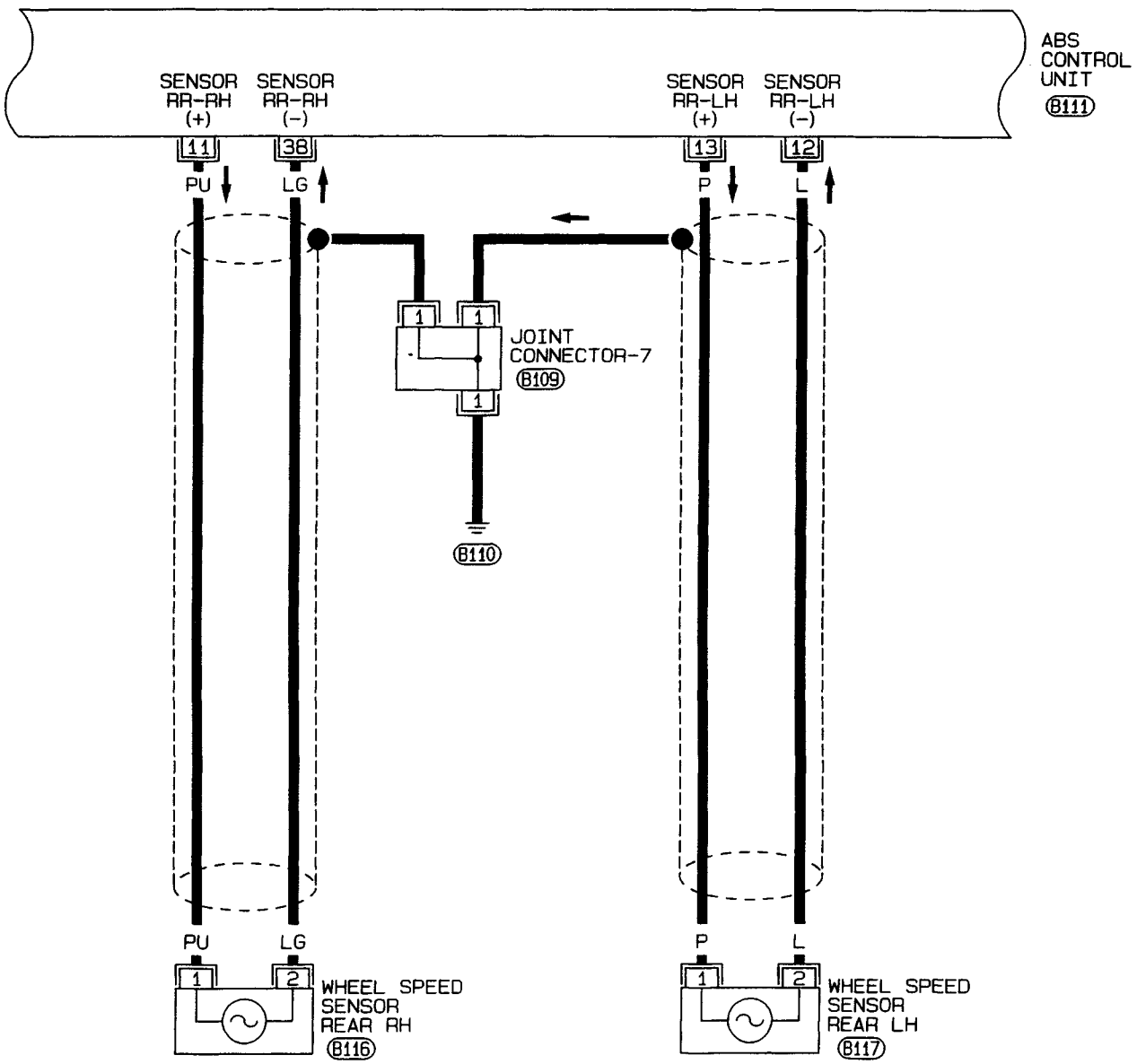

B116, B117
GY, BR

B109
GY

Refer to last page (Foldout page).

B111

BR

HBR006

Simpo PDF Merge and Split Unregistered Version - http://www.simpopdf.com

Wiring Diagram — ABS — (Cont'd)

BR-ABS-06

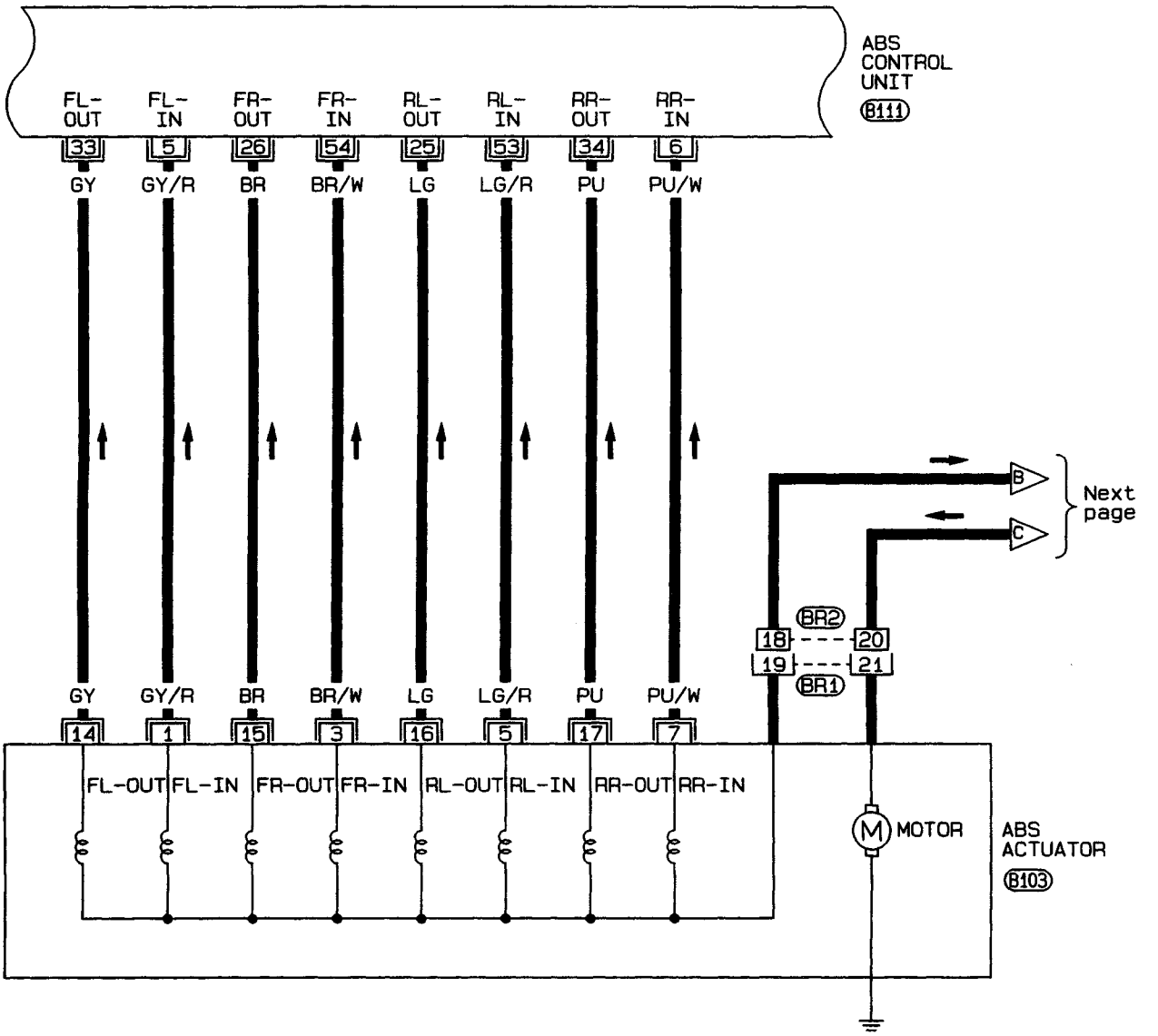

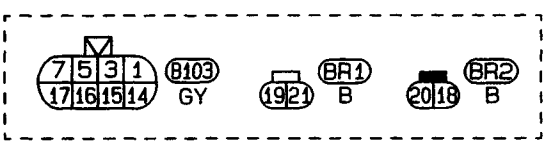

Refer to last page (Foldout page).

B111

HBR007

Simpo PDF Merge and Split Unregistered Version - http://www.simpopdf.com

Wiring Diagram — ABS — (Cont'd)

BR-ABS-07

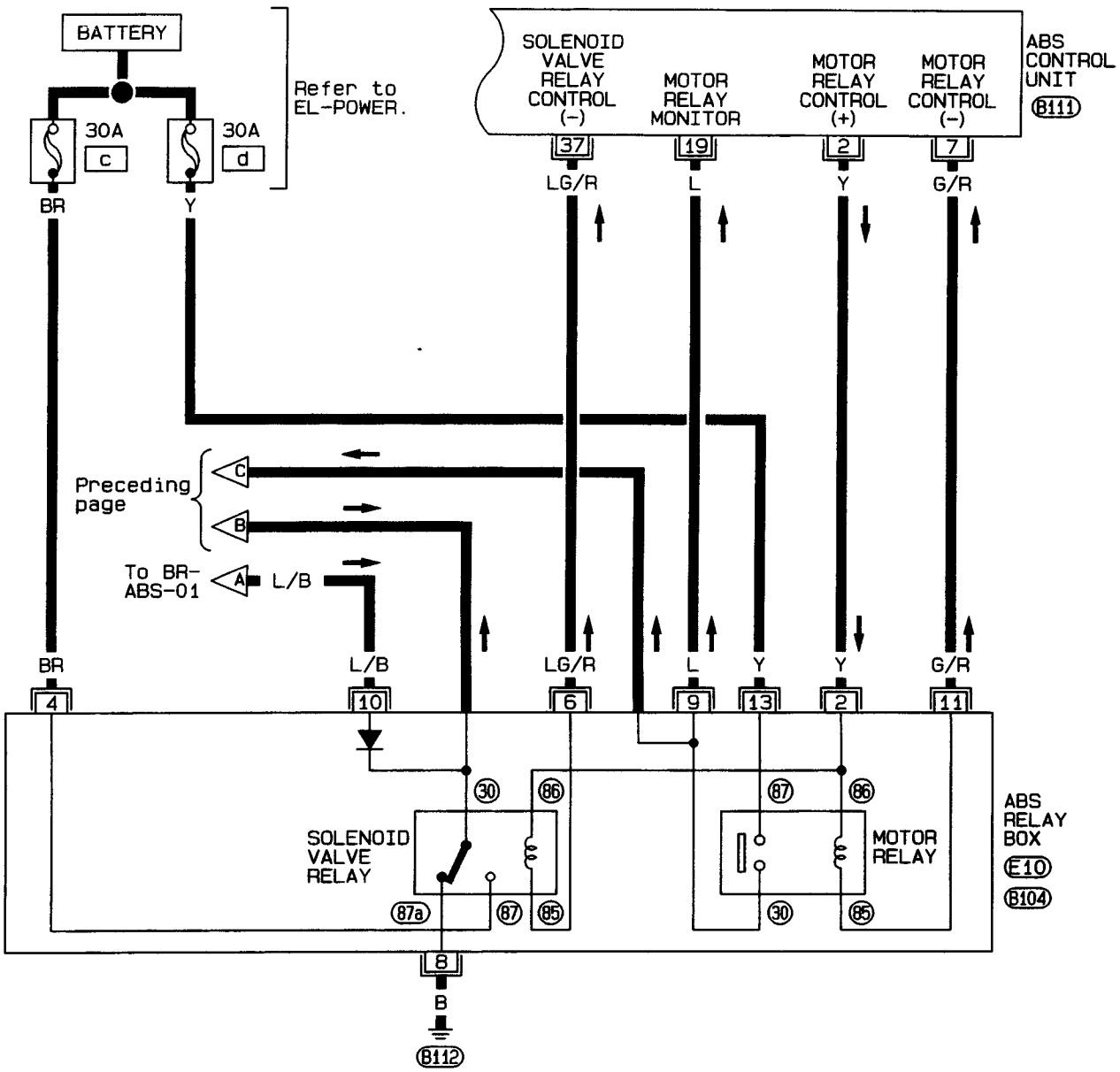

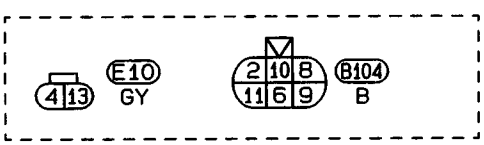

Refer to last page (Foldout page).

B111

BR

HBR008

Simpo PDF Merge and Split Unregistered Version - http://www.simpopdf.com

Contents

How to Perform Trouble Diagnoses for Quick and Accurate Repair BR-52
Self-diagnosis BR-53
CONSULT BR-58
CONSULT Inspection Procedure BR-59
Component Parts and Harness Connector Location BR-64
Preliminary Check BR-65
Ground Circuit Check BR-66
Circuit Diagram for Quick Pinpoint Check BR-67
Diagnostic Procedure 1 Warning lamp does not come on BR-68
Diagnostic Procedure 2 Warning lamp stays on BR-69
Diagnostic Procedure 3 ABS actuator solenoid valve BR-72
Diagnostic Procedure 4 Wheel sensor or rotor BR-74
Diagnostic Procedure 5 Motor relay or motor BR-76
Diagnostic Procedure 6 Solenoid valve relay BR-79
Diagnostic Procedure 7 Power supply BR-81
Diagnostic Procedure 8 Control unit BR-82
Diagnostic Procedure 9 Pedal vibration and noise BR-82
Diagnostic Procedure 10 Long stopping distance BR-83
Diagnostic Procedure 11 Unexpected pedal action BR-83
Diagnostic Procedure 12 ABS does not work BR-84
Diagnostic Procedure 13 ABS works frequently BR-84
Electrical Component Inspection BR-85

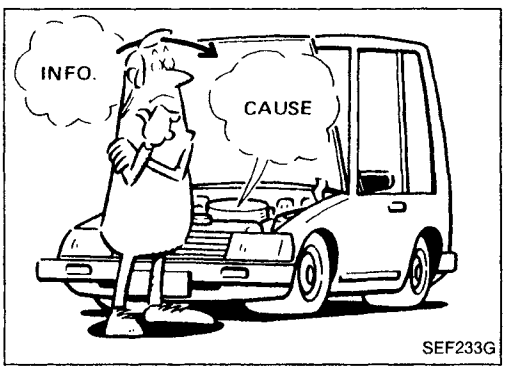

SEF233G

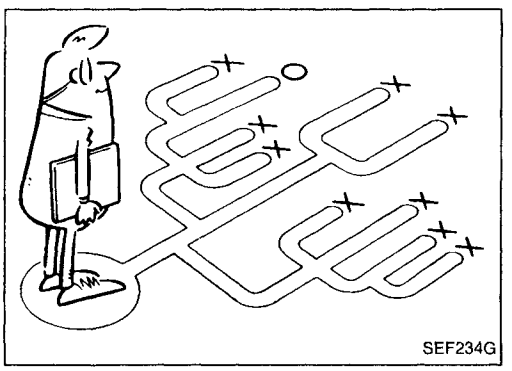
SEF234G

How to Perform Trouble Diagnoses for Quick and Accurate Repair

INTRODUCTION

The ABS system has an electronic control unit to control major functions. The control unit accepts input signals from sensors and instantly drives the actuators. It is essential that both kinds of signals are proper and stable. It is also important to check for conventional problems: such as air leaks in booster lines, lack of brake fluid, or other problems with the brake system.

It is much more difficult to diagnose a problem that occurs intermittently rather than continuously. Most intermittent problems are caused by poor electric connections or faulty wiring. In this case, careful checking of suspicious circuits may help prevent the replacement of good parts.

A visual check only may not find the cause of the problems, so a road test should be performed.

Before undertaking actual checks, take just a few minutes to talk with a customer who approaches with a ABS complaint. The customer is a very good source of information on such problems; especially intermittent ones. Through the talks with the customer, find out what symptoms are present and under what conditions they occur.

Start your diagnosis by looking for "conventional" problems first. This is one of the best ways to troubleshoot brake problems on an ABS controlled vehicle.

Simpo PDF Merge and Split Unregistered Version - http://www.simpopdf.com

Self-diagnosis (For Europe)

FUNCTION

- When a problem occurs in the ABS, the warning lamp on the instrument panel comes on.
- A maximum of three malfunctions are stored in the memory of the ABS control unit.

Erase the self-diagnosis results stored in the control unit after malfunctions are repaired (See next page).

- The self-diagnosis results are identified by CONSULT or warning lamp.

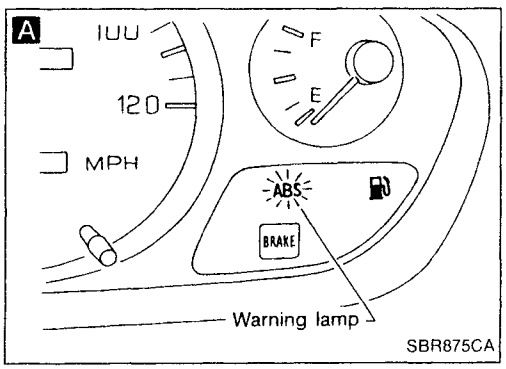

SELF-DIAGNOSIS PROCEDURE

Start engine.
Drive vehicle over 15 km/h (9 MPH) for at least one minute.

↓

A

Stop vehicle with engine running.
Make sure that the ABS warning lamp activates.

↓

Verify the location of the malfunction with the malfunction code chart.
Then make necessary repairs following the diagnostic procedures.

↓

After the malfunctions are repaired, erase the self-diagnostic results stored in the control unit.
Disconnect connectors for ABS control unit or the battery negative terminal for at least one minute.

↓

Check warning lamp for deactivation after driving vehicle over 15 km/h (9 MPH) for at least one minute.

↓

Test the ABS in a safe area to verify that it functions properly.

Simpo PDF Merge and Split Unregistered Version - http://www.simpopdf.com

Self-diagnosis (For Europe) (Cont'd)

HOW TO READ SELF-DIAGNOSTIC RESULTS (Malfunction codes)

- Determine the code No. by counting the number of times the warning lamp flashes on and off.
- The malfunction code chart is given on the next page.

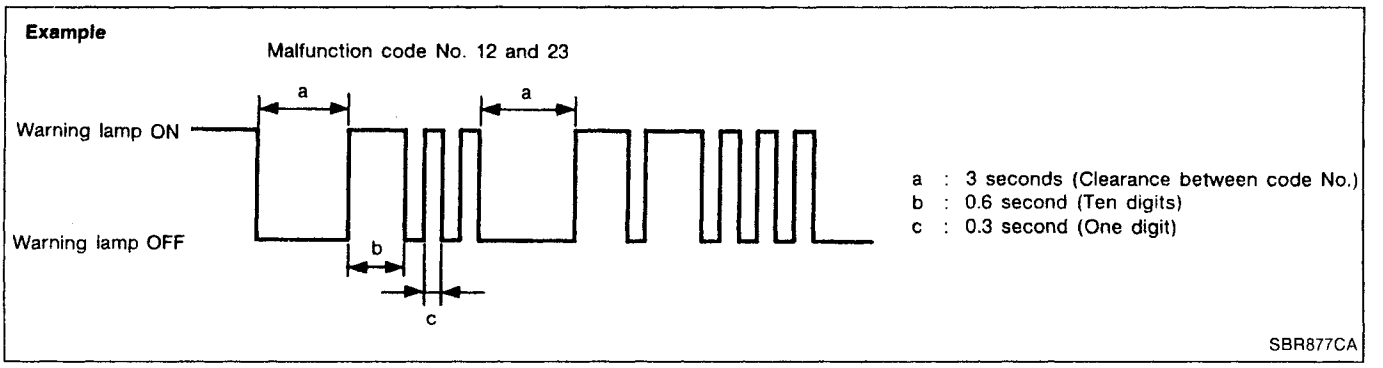

HOW TO ERASE SELF-DIAGNOSTIC RESULTS (Malfunction codes)

- Disconnect ABS control unit connectors or battery negative terminal for at least one minute.
- When using CONSULT, touch "ERASE" on the CONSULT screen with self-diagnostic results mode.

Simpo PDF Merge and Split Unregistered Version - http://www.simpopdf.com

Self-diagnosis (For Europe) (Cont'd)

MALFUNCTION CODE/SYMPTOM CHART

Code No. (No. of warning lamp flashes)	Malfunctioning part	Diagnostic procedure
45	Actuator front left outlet solenoid valve	3
46	Actuator front left inlet solenoid valve	3
41	Actuator front right outlet solenoid valve	3
42	Actuator front right inlet solenoid valve	3
51	Actuator rear right outlet solenoid valve	3
52	Actuator rear right inlet solenoid valve	3
55	Actuator rear left outlet solenoid valve	3
56	Actuator rear left inlet solenoid valve	3
25	Front left sensor (open-circuit)	4
26	Front left sensor (short-circuit)	4
21	Front right sensor (open-circuit)	4
22	Front right sensor (short-circuit)	4
35	Rear left sensor (open-circuit)	4
36	Rear left sensor (short-circuit)	4
31	Rear right sensor (open-circuit)	4
32	Rear right sensor (short-circuit)	4
18	Sensor rotor	4
61	Actuator motor or motor relay	5
63	Solenoid valve relay	6
57	Power supply (Low voltage)	7
71	Control unit	8
Warning lamp stays on when ignition switch is turned on	Control unit power supply circuit Warning lamp bulb circuit Control unit or control unit connector Solenoid valve relay stuck Power supply for solenoid valve relay coil	2
Warning lamp stays on, during self-diagnosis	Control unit	—
Warning lamp does not come on when ignition switch is turned on	Fuse, warning lamp bulb or warning lamp circuit Control unit	1
Warning lamp does not come on during self-diagnosis	Control unit	—
Pedal vibration and noise	—	9
Long stopping distance	—	10
Unexpected pedal action	—	11
ABS does not work	—	12
ABS works frequently	—	13

Simpo PDF Merge and Split Unregistered Version - http://www.simpopdf.com

Self-diagnosis (Except Europe)

FUNCTION

- When a problem occurs in the ABS, the warning lamp on the instrument panel comes on. To start the self-diagnostic results mode, ground the self-diagnostic (check) terminal located on "Data Link Connector for CONSULT". The location of the malfunction is indicated by the warning lamp flashing.

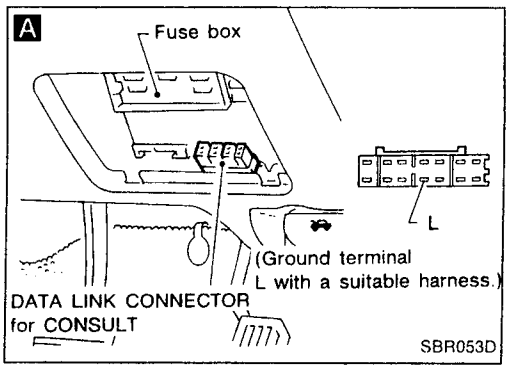

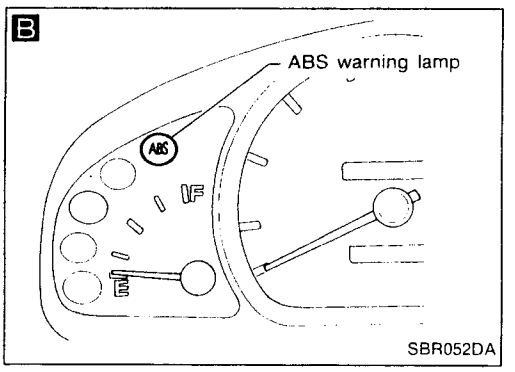

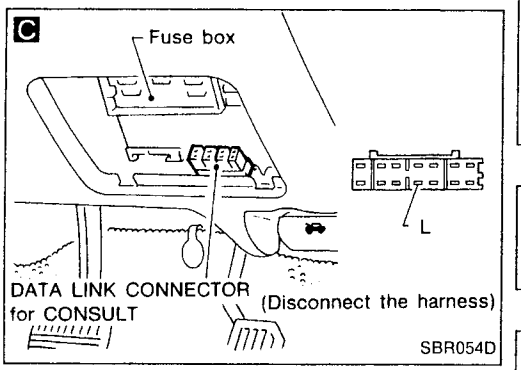

SELF-DIAGNOSIS PROCEDURE

Drive vehicle over 30 km/h (20 MPH) for at least one minute.

↓

Turn ignition switch "OFF".

↓

A

Ground terminal "L" of "DATA LINK CONNECTOR for CONSULT" with a suitable harness.

↓

Turn ignition switch "ON" while grounding terminal "L".
Do not depress brake pedal.

↓

B

After 3.6 seconds, the warning lamp starts flashing to indicate the malfunction code No. (See NOTE.)

↓

Verify the location of the malfunction with the malfunction code chart. Refer to BR-57. Then make the necessary repairs following the diagnostic procedures.

↓

After the malfunctions are repaired, erase the malfunction codes stored in the control unit. Refer to BR-57.

↓

Rerun the self-diagnostic results mode to verify that the malfunction codes have been erased.

↓

C

Disconnect the check terminal from the ground. The self-diagnostic results mode is now complete.

↓

Ⓐ

NOTE: The indication terminates after five minutes. However, when the ignition switch is turned from "OFF" to "ON", the indication starts flashing again.

Simpo PDF Merge and Split Unregistered Version - http://www.simpopdf.com

Self-diagnosis (Except Europe) (Cont'd)

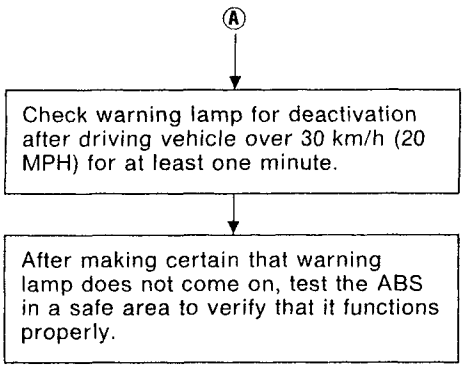

HOW TO READ SELF-DIAGNOSTIC RESULTS (Malfunction codes)

- Determine the code No. by counting the number of times the warning lamp flashes on and off.
- When several malfunctions occur at one time, up to three code numbers can be stored; the latest malfunction will be indicated first.
- The indication begins with the start code 12. After that a maximum of three code numbers appear in the order of the latest one first. The indication then returns to the start code 12 to repeat (the indication will stay on for five minutes at the most).
- The malfunction code chart is given on the next page.

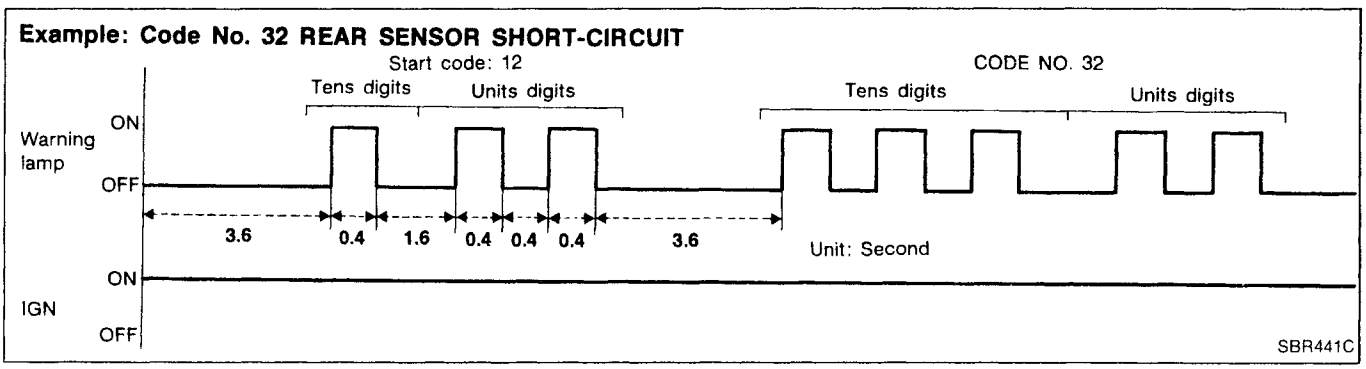

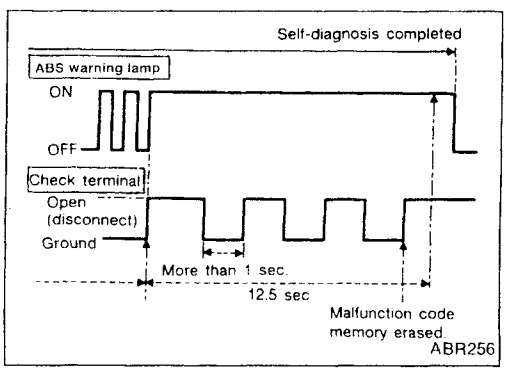

HOW TO ERASE SELF-DIAGNOSTIC RESULTS (Malfunction codes)

1. Disconnect the check terminal from ground (ABS warning lamp will stay lit).
2. Within 12.5 seconds, ground the check terminal 3 times. Each terminal ground must last more than 1 second. The ABS warning lamp goes out after the erase operation has been completed.
3. Perform self-diagnosis again. Refer to BR-56. Only the start code should appear, no malfunction codes.

MALFUNCTION CODE/SYMPTOM CHART

Refer to BR-55.

BR

Simpo PDF Merge and Split Unregistered Version - http://www.simpopdf.com

CONSULT

CONSULT APPLICATION TO ABS

ITEM	SELF-DIAGNOSTIC RESULTS	DATA MONITOR	ACTIVE TEST
Front right wheel sensor	X	X	—
Front left wheel sensor	X	X	—
Rear right wheel sensor	X	X	—
Rear left wheel sensor	X	X	—
Stop lamp switch	—	X	—
Front right inlet solenoid valve	X	X	X
Front right outlet solenoid valve	X	X	X
Front left inlet solenoid valve	X	X	X
Front left outlet solenoid valve	X	X	X
Rear right inlet solenoid valve	X	X	X
Rear left inlet solenoid valve	X	X	X
Rear right outlet solenoid valve	X	X	X
Rear left outlet solenoid valve	X	X	X
Actuator solenoid valve relay	X	X	—
Actuator motor relay (ABS MOTOR is shown on the Data Monitor screen.)	X	X	X
ABS warning lamp	—	X	—
Battery voltage	X	X	—

X: Applicable
—: Not applicable

ECU part number mode

Ignore the ECU part number displayed in the ECU PART NUMBER MODE. Refer to parts catalog to order the ECU.

Simpo PDF Merge and Split Unregistered Version - http://www.simpopdf.com

A

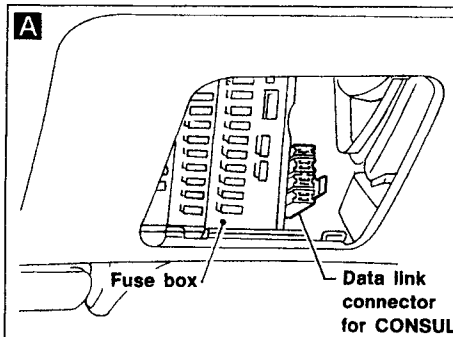

SBF326H

B

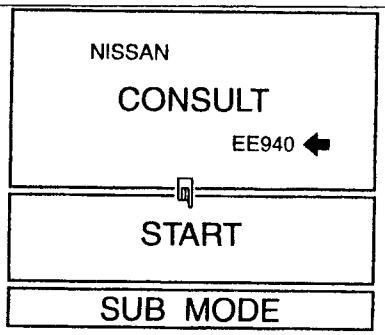

SEF253Q

C

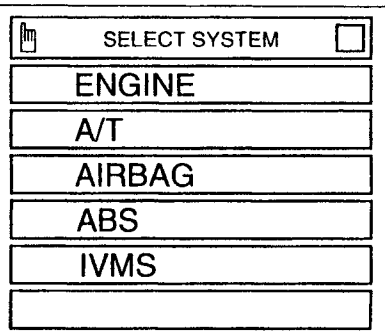

SBR104D

D

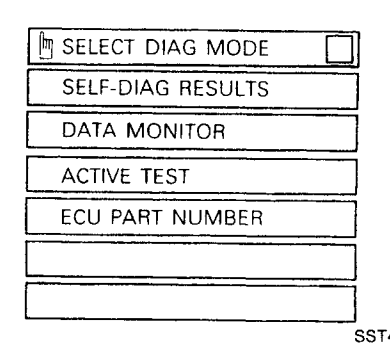

SST412B

E

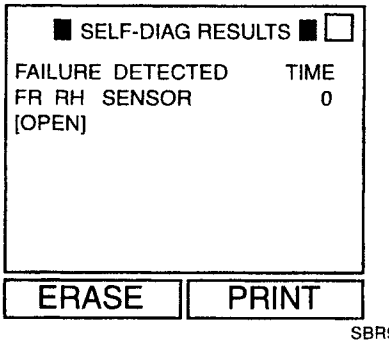

SBR950C

CONSULT Inspection Procedure

SELF-DIAGNOSIS PROCEDURE

A

1) Turn ignition switch OFF.
2) Connect CONSULT to Data Link Connector for CONSULT.

1) Start engine.
2) Drive vehicle over 30 km/h (20 MPH) for at least one minute.

B 1) Stop vehicle with engine running and touch "START" on CONSULT screen.

Program card
AE950: For Australia
EE940: Except Australia

C 2) Touch "ABS".

D 3) Touch "SELF-DIAG RESULTS".

- The screen shows the detected malfunction and the times of ignition switch ON and OFF after it occurred.

Make the necessary repairs following the diagnostic procedures.

E

After the malfunctions are repaired, erase the self-diagnostic results stored in the control unit by touching "ERASE".

Check warning lamp for deactivation after driving vehicle over 30 km/h (20 MPH) for at least one minute.

Test the ABS in a safe area to verify that it functions properly.

Note: "SELF-DIAG RESULTS" screen shows the detected malfunction and the times of ignition switch ON and OFF after it occurred.

BR

Simpo PDF Merge and Split Unregistered Version - http://www.simpopdf.com

CONSULT Inspection Procedure (Cont'd)

SELF-DIAGNOSTIC RESULTS MODE

Diagnostic item	Diagnostic item is detected when ...	Diagnostic procedure
FR RH SENSOR [OPEN]	● Circuit for front right wheel sensor is open. (An abnormally high input voltage is entered.)	4
FR LH SENSOR [OPEN]	● Circuit for front left wheel sensor is open. (An abnormally high input voltage is entered.)	4
RR RH SENSOR [OPEN]	● Circuit for rear right sensor is open. (An abnormally high input voltage is entered.)	4
RR LH SENSOR [OPEN]	● Circuit for rear left sensor is open. (An abnormally high input voltage is entered.)	4
FR RH SENSOR [SHORT]	● Circuit for front right wheel sensor is shorted. (An abnormally low input voltage is entered.)	4
FR LH SENSOR [SHORT]	● Circuit for front left wheel sensor is shorted. (An abnormally low input voltage is entered.)	4
RR RH SENSOR [SHORT]	● Circuit for rear right sensor is shorted. (An abnormally low input voltage is entered.)	4
RR LH SENSOR [SHORT]	● Circuit for rear left sensor is shorted. (An abnormally low input voltage is entered.)	4
ABS SENSOR [ABNORMAL SIGNAL]	● Teeth damage on sensor rotor or improper installation of wheel sensor. (Abnormal wheel sensor signal is entered.)	4
FR RH IN ABS SOL [OPEN]	● Circuit for front right inlet solenoid valve is open. (An abnormally low output voltage is entered.)	3
FR LH IN ABS SOL [OPEN]	● Circuit for front left inlet solenoid valve is open. (An abnormally low output voltage is entered.)	3
RR RH IN ABS SOL [OPEN]	● Circuit for rear right inlet solenoid valve is open. (An abnormally low output voltage is entered.)	3
RR LH IN ABS SOL [OPEN]	● Circuit for rear left inlet solenoid valve is open. (An abnormally low output voltage is entered.)	3
FR RH IN ABS SOL [SHORT]	● Circuit for front right inlet solenoid valve is shorted. (An abnormally high output voltage is entered.)	3
FR LH IN ABS SOL [SHORT]	● Circuit for front left inlet solenoid valve is shorted. (An abnormally high output voltage is entered.)	3
RR RH IN ABS SOL [SHORT]	● Circuit for rear right inlet solenoid valve is shorted. (An abnormally high output voltage is entered.)	3
RR LH IN ABS SOL [SHORT]	● Circuit for rear left inlet solenoid valve is shorted. (An abnormally high output voltage is entered.)	3
FR RH OUT ABS SOL [OPEN]	● Circuit for front right outlet solenoid valve is open. (An abnormally low output voltage is entered.)	3
FR LH OUT ABS SOL [OPEN]	● Circuit for front left outlet solenoid valve is open. (An abnormally low output voltage is entered.)	3
RR RH OUT ABS SOL [OPEN]	● Circuit for rear right outlet solenoid valve is open. (An abnormally low output voltage is entered.)	3
RR LH OUT ABS SOL [OPEN]	● Circuit for rear left outlet solenoid valve is open. (An abnormally low output voltage is entered.)	3
FR RH OUT ABS SOL [SHORT]	● Circuit for front right outlet solenoid valve is shorted. (An abnormally high output voltage is entered.)	3
FR LH OUT ABS SOL [SHORT]	● Circuit for front left outlet solenoid valve is shorted. (An abnormally high output voltage is entered.)	3
RR RH OUT ABS SOL [SHORT]	● Circuit for rear right outlet solenoid valve is shorted. (An abnormally high output voltage is entered.)	3
RR LH OUT ABS SOL [SHORT]	● Circuit for rear left outlet solenoid valve is shorted. (An abnormally high output voltage is entered.)	3
ABS ACTUATOR RELAY [FAILURE]	● Actuator solenoid valve relay is ON, even control unit sends off signal. ● Actuator solenoid valve relay is OFF, even control unit sends on signal.	6
ABS MOTOR [FAILURE]	● Circuit for actuator motor is open or shorted. ● Actuator motor relay is stuck.	5
BATTERY VOLT [VB-LOW]	● Power source voltage supplied to ABS control unit is abnormally low.	7
CONTROL UNIT	● Function of calculation in ABS control unit has failed.	8

Simpo PDF Merge and Split Unregistered Version - http://www.simpopdf.com

CONSULT Inspection Procedure (Cont'd)

DATA MONITOR PROCEDURE

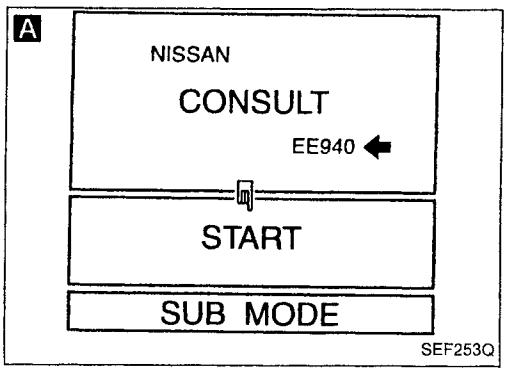

1) Turn ignition switch OFF.
2) Connect CONSULT to Data Link Connector for CONSULT.
3) Turn ignition switch ON.

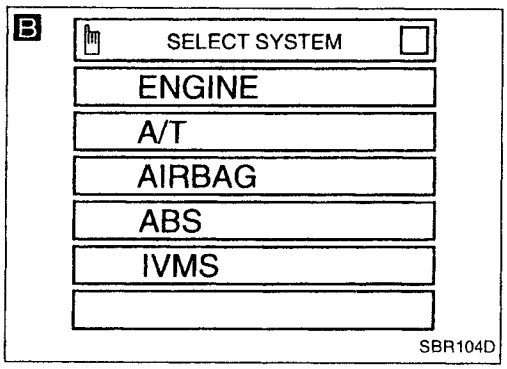

A 1) Touch "START" on CONSULT screen.
B 2) Touch "ABS".
C 3) Touch "DATA MONITOR".

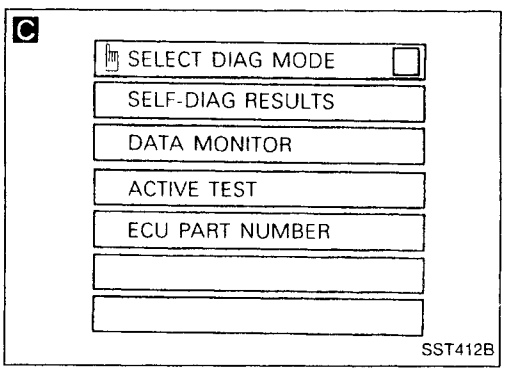

D 1) Touch "SETTING" on "SELECT MONITOR ITEM" screen.
E 2) Touch "LONG TIME" on "SET RECORDING COND" screen.
D 3) Touch "START" on "SELECT MONITOR ITEM".

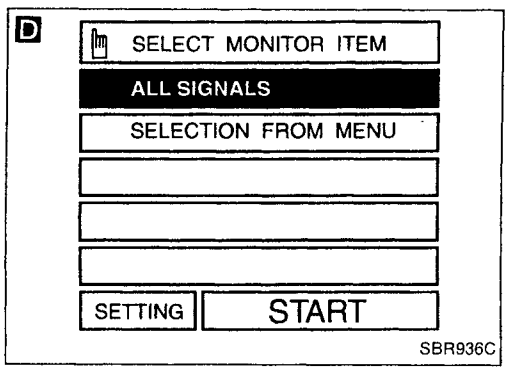

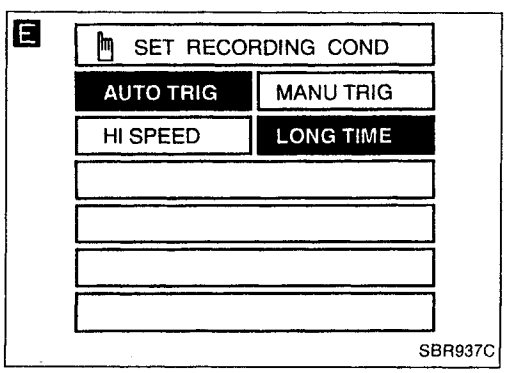

BR

Simpo PDF Merge and Split Unregistered Version - http://www.simpopdf.com

CONSULT Inspection Procedure (Cont'd)

ACTIVE TEST PROCEDURE

- When conducting Active test, vehicle must be stationary.
- When ABS warning lamp stays on, never conduct Active test.

1) Turn ignition switch OFF.
2) Connect CONSULT to Data Link Connector for CONSULT.
3) Start engine.

↓

A 1) Touch "START" on CONSULT screen.
B 2) Touch "ABS".
C 3) Touch "ACTIVE TEST".

↓

D 1) Select active test item by touching screen.
E 2) Touch "START".

↓

Carry out the active test by touching screen key.

A

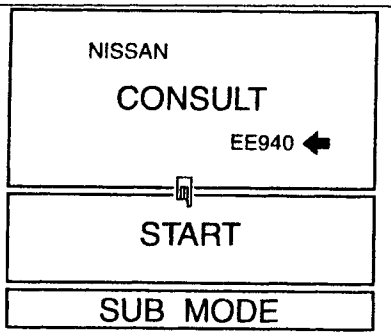

SEF253Q

B

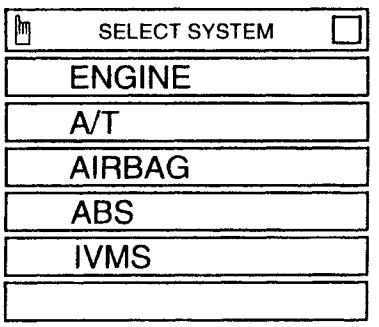

SBR104D

C

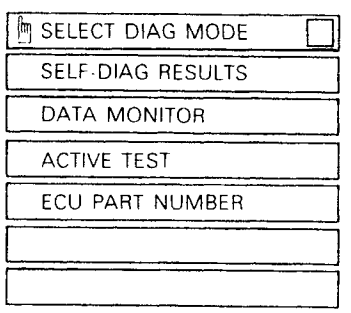

SST412B

D

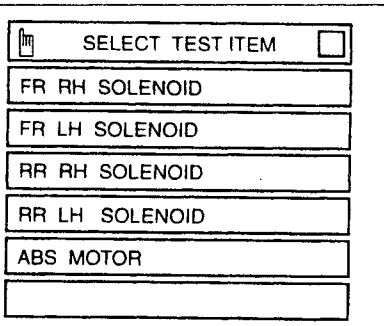

SBR976C

E

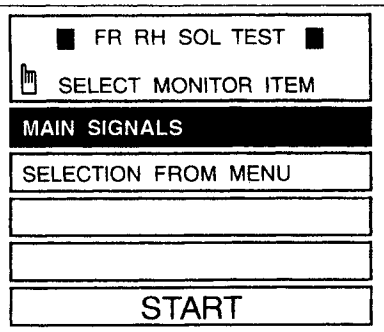

SBR934C

Simpo PDF Merge and Split Unregistered Version - http://www.simpopdf.com

CONSULT Inspection Procedure (Cont'd)

DATA MONITOR MODE

MONITOR ITEM	CONDITION	SPECIFICATION
FR RH SENSOR FR LH SENSOR REAR RH SENSOR REAR LH SENSOR	Drive vehicle. (Each wheel is rotating.)	Almost the same speed as speedometer.
STOP LAMP SW	Brake is depressed.	Depress the pedal: ON Release the pedal: OFF
FR RH IN SOL FR RH OUT SOL FR LH IN SOL FR LH OUT SOL RR RH IN SOL RR RH OUT SOL RR LH IN SOL RR LH OUT SOL	Engine is running.	Operating conditions for each solenoid valve are indicated. ABS is not operating: OFF
ACTUATOR RLY	Ignition switch is ON or engine is running.	Ignition switch ON (Engine stops): OFF Engine running: ON
MOTOR RELAY		ABS is not operating: OFF ABS is operating: ON
WARNING LAMP		Warning lamp is turned on: ON Warning lamp is turned off: OFF
BATTERY VOLT		Power supply voltage for control unit

ACTIVE TEST MODE

TEST ITEM	CONDITION	JUDGEMENT
FR RH SOLENOID FR LH SOLENOID RR RH SOLENOID RR LH SOLENOID	Engine is running.	Brake fluid pressure control operation IN SOL / OUT SOL UP (Increase): OFF / OFF KEEP (Hold): ON / OFF DOWN (Decrease): ON / ON
ABS MOTOR		ABS actuator motor ON: Motor runs OFF: Motor stops

Note: Active test will automatically stop ten seconds after the test starts. (LIMIT SIGNAL monitor shows ON.)

BR

Simpo PDF Merge and Split Unregistered Version - http://www.simpopdf.com

Component Parts and Harness Connector Location

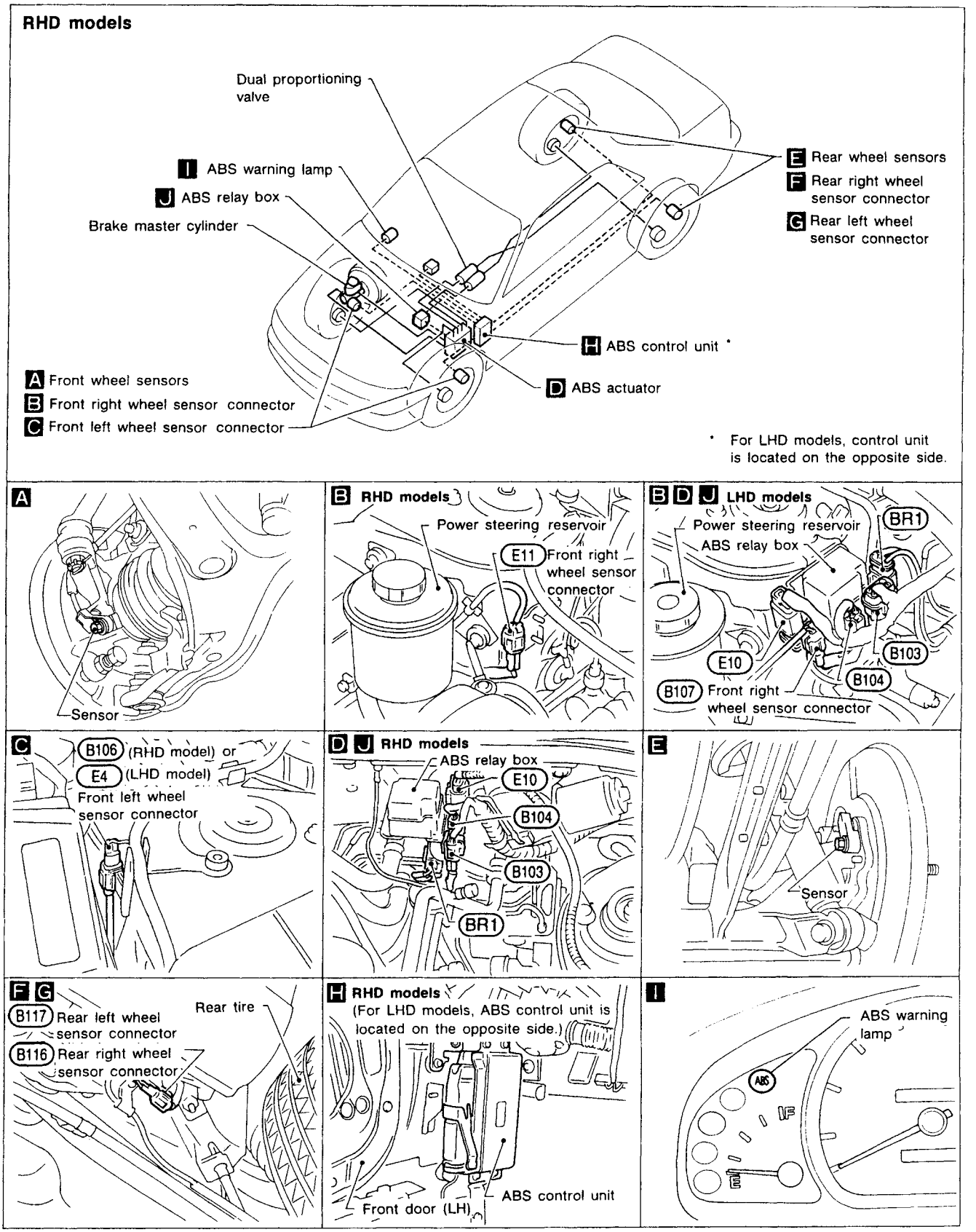

SBR047DA

Simpo PDF Merge and Split Unregistered Version - http://www.simpopdf.com

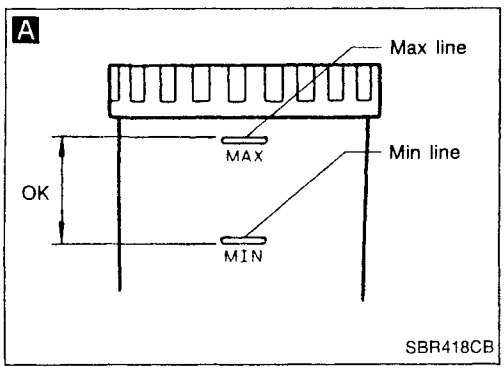

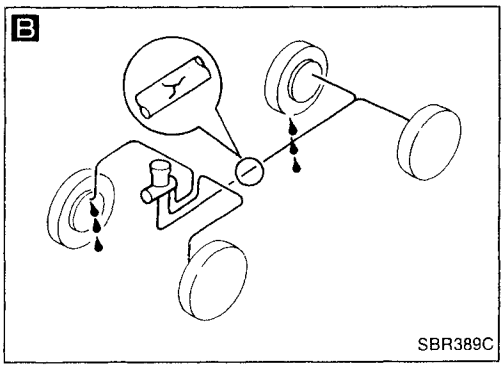

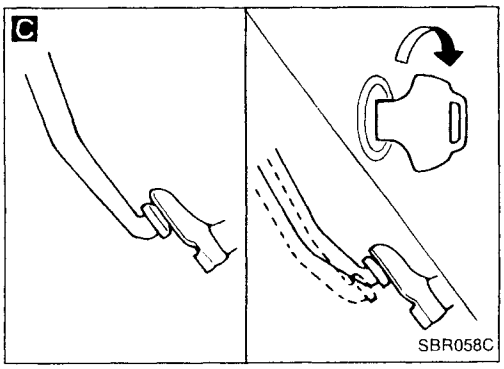

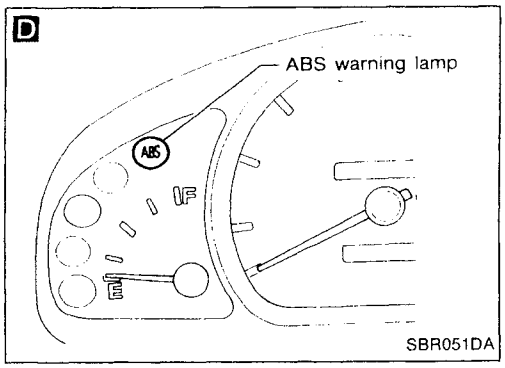

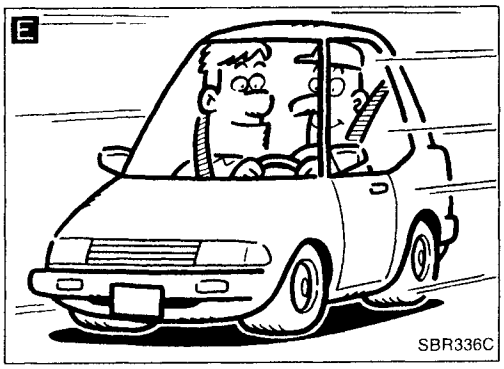

Preliminary Check

A

Check brake fluid level in reservoir tank.

Low fluid level may indicate brake pad wear or leakage from brake line.

B

Check brake line for leakage. — NG → Repair.

OK

C

Check brake booster for operation and air tightness. Refer to BR-15. — NG → Replace.

OK

Check brake pads and rotor. Refer to BR-19, 29. — NG → Replace.

OK

A

Check brake fluid level in reservoir tank. — NG → Fill up brake fluid.

OK

D

Check warning lamp activation. When ignition switch is turned on, warning lamp turns on. — NG → Check fuse, warning lamp bulb and warning lamp circuit.

OK

Check warning lamp for deactivation. When ignition switch is turned on, warning lamp turns on, then deactivates after 1 second. — NG → Go to Self-diagnosis, BR-56.

OK

E

Drive vehicle at 30 km/h (20 MPH) for at least one minute.

Ensure warning lamp remains off while driving. — NG → Go to Self-diagnosis, BR-56.

OK

END

BR

Simpo PDF Merge and Split Unregistered Version - http://www.simpopdf.com

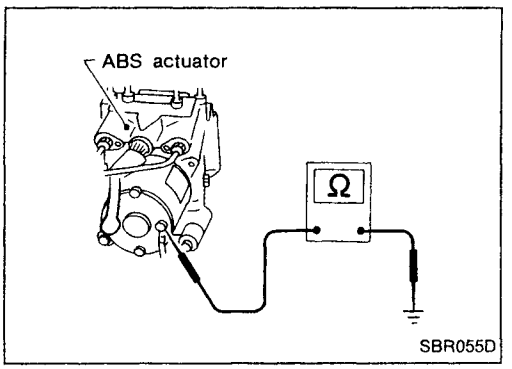

Ground Circuit Check

ACTUATOR MOTOR GROUND

- Check resistance between actuator motor ground terminal and body ground.
  Resistance: 0Ω

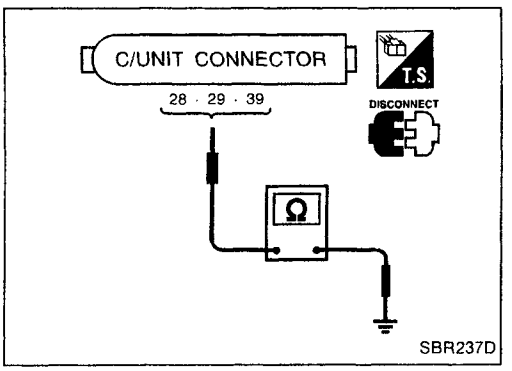

CONTROL UNIT GROUND

- Check resistance between the terminals and ground.
  Resistance: 0Ω

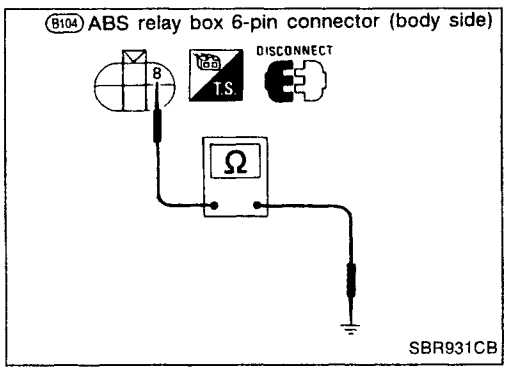

ABS RELAY BOX GROUND

- Check resistance between ABS relay box harness 6-pin connector (body side) terminal ⑧ and ground.
  Resistance: 0Ω

Simpo PDF Merge and Split Unregistered Version - http://www.simpopdf.com

Circuit Diagram for Quick Pinpoint Check

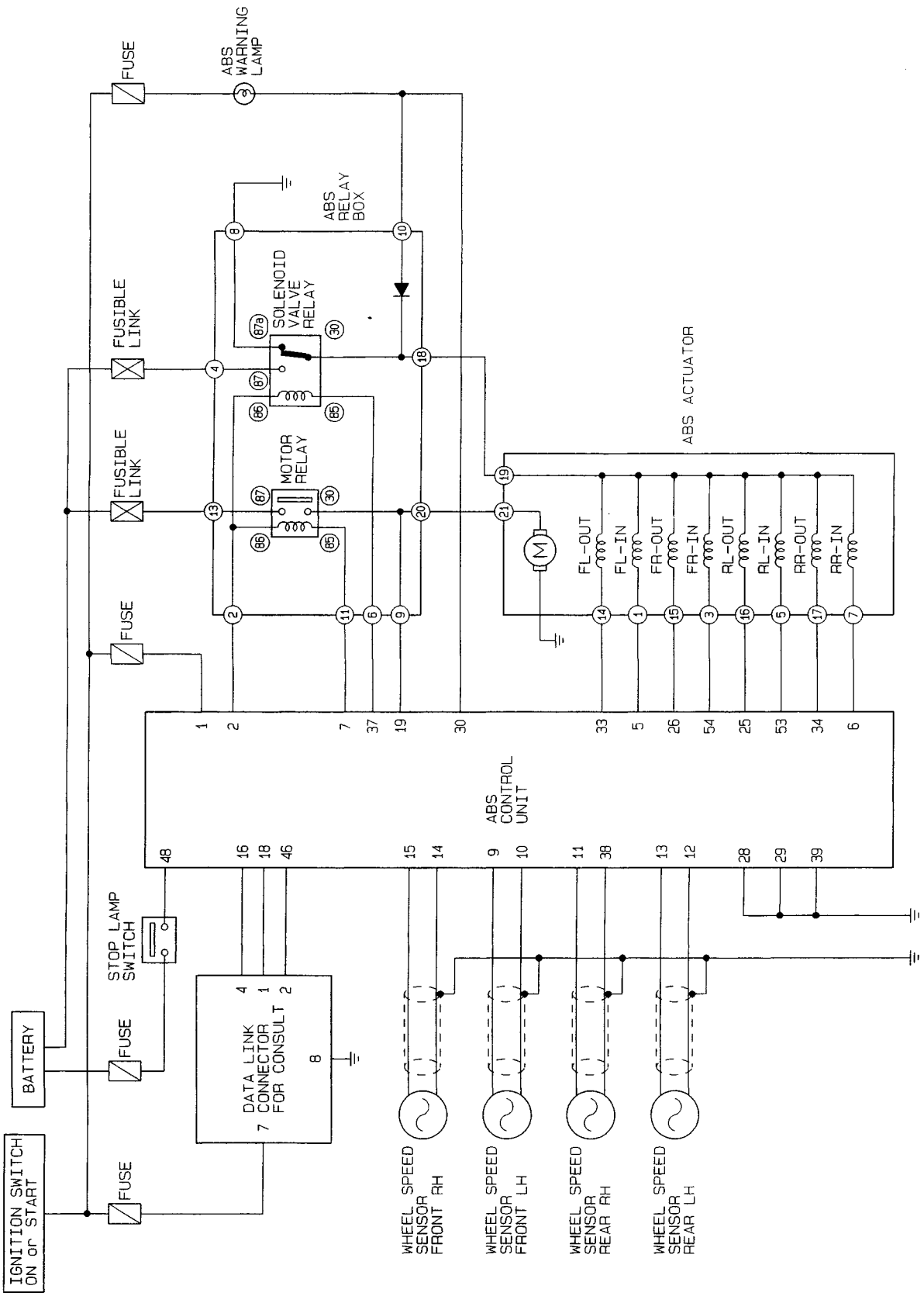

HBR001

BR

Simpo PDF Merge and Split Unregistered Version - http://www.simpopdf.com

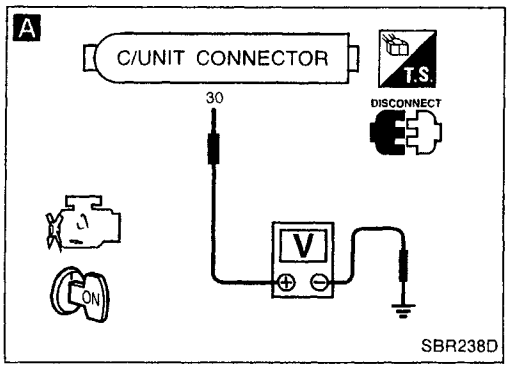

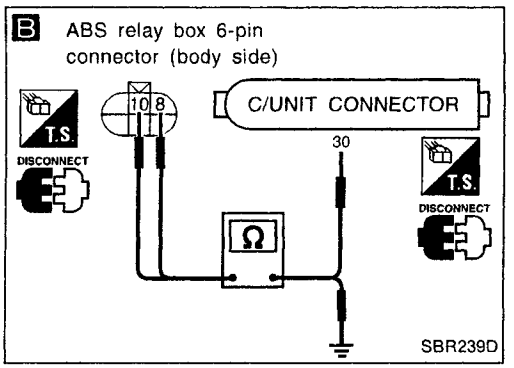

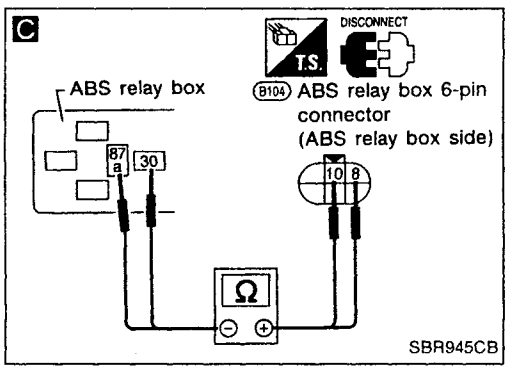

Diagnostic Procedure 1 (Not self-diagnostic item)

Warning lamp does not come on when ignition switch is turned on.

WARNING LIGHT CIRCUIT CHECK

Check 10A fuse [8] for warning lamp.
For fuse layout, refer to BR-45.

NG → Replace fuse.

OK ↓

Check warning lamp bulb.

NG → Replace bulb.

OK ↓

A

1. Install 10A fuse and bulb.
2. Disconnect connectors from control unit and ABS relay box.
3. Check voltage between control unit connector terminal ㉚ and ground after turning ignition switch "ON".
   Battery voltage should exist after turning ignition switch "ON".

NG → Repair harness and connectors.

OK ↓

B

- Check continuity between ABS relay box 6-pin connector (body side) and control unit terminals.

ABS relay box	Control unit
⑩	㉚
⑧	Ground

Continuity should exist.

NG → Repair harness and connectors.

OK ↓

C

1. Remove solenoid valve relay.
2. Check continuity between ABS relay box 6-pin connector (ABS relay box side) and ABS relay box terminals.

ABS relay box connector	ABS relay box terminals
⑩ ⊕	㉚ ⊖
⑧	87a

Continuity should exist.
Note: Pay attention to tester polarity*.

NG → Replace ABS relay box.

OK ↓

SOLENOID VALVE RELAY CHECK

Refer to SOLENOID VALVE RELAY in Electrical Components Inspection, BR-85.

NG → Replace solenoid valve relay.

OK ↓

Go to Diagnostic Procedure 7, BR-81.

***: Specifications may vary depending on the type of tester. Before performing this inspection, refer to the instruction manual of the tester.**

Simpo PDF Merge and Split Unregistered Version - http://www.simpopdf.com

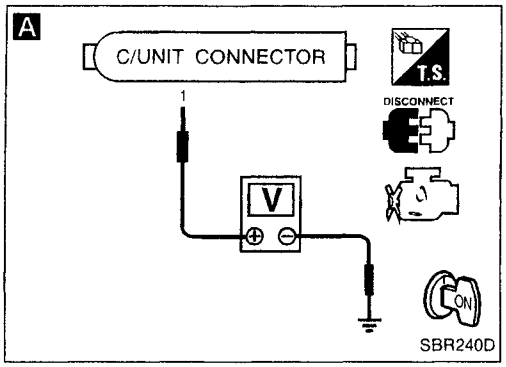

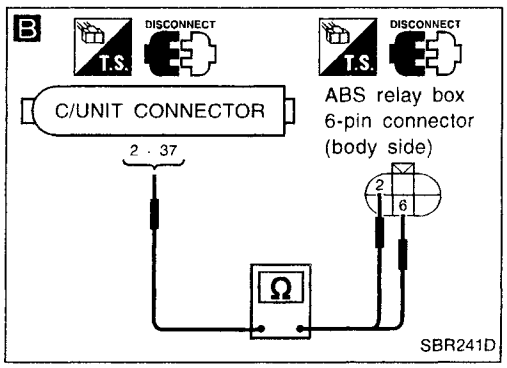

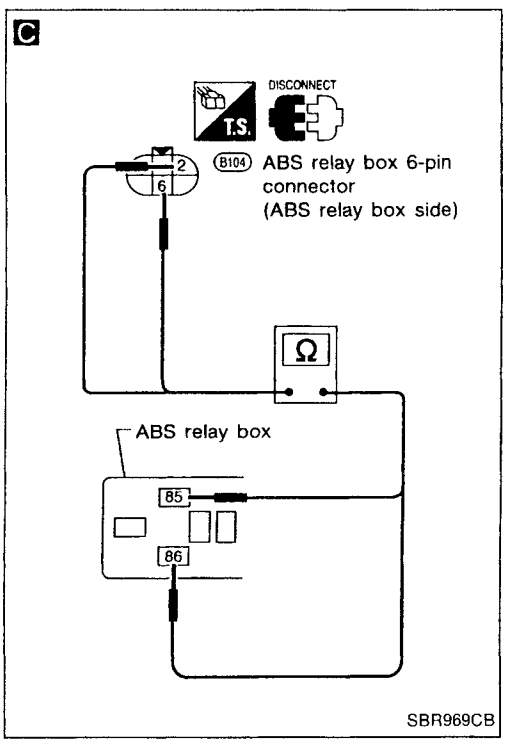

Diagnostic Procedure 2 (Not Self-diagnostic item)

Warning lamp stays on when ignition switch is turned on.

CONTROL UNIT POWER SUPPLY CIRCUIT

Check 7.5A fuse [12] for control unit.
For fuse layout, refer to BR-45.

NG → (Go to Ⓑ on BR-71.)

OK ↓

A

1. Disconnect connector from control unit.
2. Check voltage between control unit connector terminal ① and ground after turning ignition switch "ON".
   Battery voltage should exist.

NG → Repair harness and connector.

OK ↓

B

SOLENOID VALVE RELAY COIL POWER SUPPLY CIRCUIT

1. Turn ignition switch "OFF". Disconnect ABS relay box 6-pin connector.
2. Check continuity between control unit connector terminals and ABS relay box 6-pin connector (body side) terminals.

Control unit	ABS relay box
②	②
㊲	⑥

Continuity should exist.

NG → Repair harness and connector.

OK ↓

C

CIRCUIT CHECK

1. Disconnect solenoid valve relay.
2. Check continuity between ABS relay box 6-pin connector (ABS relay box side) terminals and solenoid valve relay box terminals.

ABS relay box connector	ABS relay box terminals
②	㊱
⑥	㊲

Continuity should exist.

NG → Replace ABS relay box.

OK ↓

SOLENOID VALVE RELAY CHECK

Refer to SOLENOID VALVE RELAY in Electrical Components Inspection, BR-85.

NG → Replace solenoid valve relay.

OK ↓

Ⓐ

(Go to next page.)

BR

Simpo PDF Merge and Split Unregistered Version - http://www.simpopdf.com

Diagnostic Procedure 2 (Not Self-diagnostic item) (Cont'd)

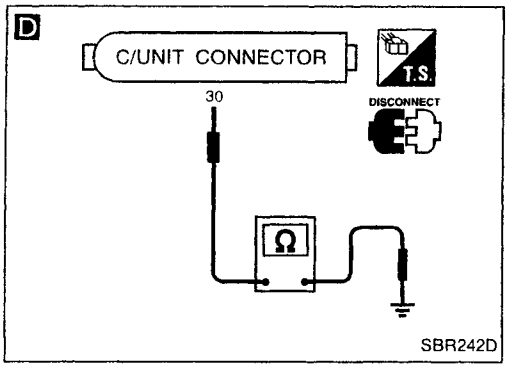

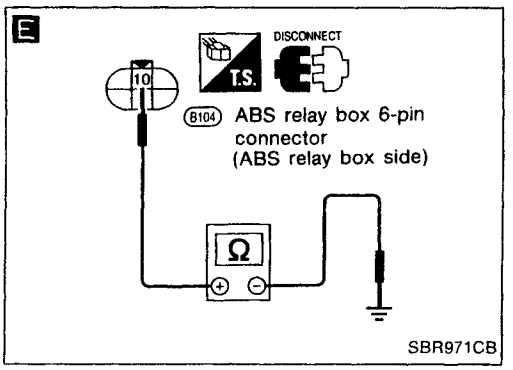

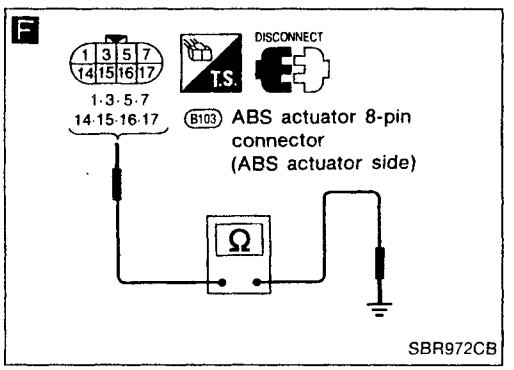

Ⓐ

D

GROUND-SHORT CHECK FOR WARNING LAMP CIRCUIT.

1. Turn ignition switch "OFF".
2. Disconnect connectors from control unit and ABS relay box 6-pin connector.
3. Check continuity between control unit connector terminal ㉚ and body ground.
   Continuity should not exist.

NG → Repair harness and connector.

OK ↓

E

1. Disconnect actuator ground terminal and 6-pin connector.
2. Check continuity between ABS relay box 6-pin connector (ABS relay box side) terminal ⑩ and body ground.
   Continuity should not exist.

Note: Pay attention to tester polarity*.

NG → Replace ABS relay box.

OK ↓

F

SOLENOID VALVE CIRCUIT

1. Disconnect ABS actuator 8-pin connector.
2. Check continuity between each ABS actuator 8-pin connector (ABS actuator side) terminals and body ground.
   Continuity should not exist.

NG → Replace ABS actuator.

OK ↓

Check control unit pin terminals for damage or the connection of control unit harness connector.
Reconnect control unit harness connector. Then retest.

***: Specifications may vary depending on the type of tester. Before performing this inspection, refer to the instruction manual of the tester.**

Simpo PDF Merge and Split Unregistered Version - http://www.simpopdf.com

Diagnostic Procedure 2 (Not Self-diagnostic item) (Cont'd)

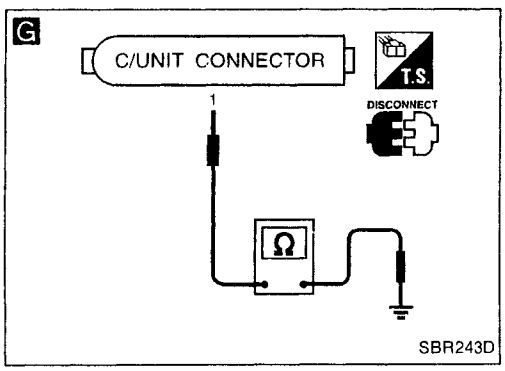

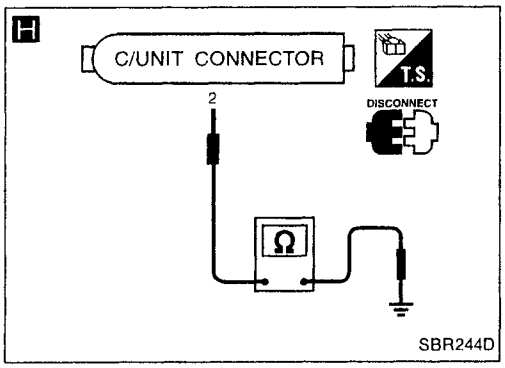

Ⓑ

Replace 7.5A fuse.
Does the fuse blow out when ignition switch is turned "ON"?

No → Inspection end

Yes

G

CONTROL UNIT POWER SUPPLY CIRCUIT

1. Disconnect control unit connector.
2. Check continuity between control unit connector terminal ① and body ground.
   Continuity should not exist.

NG → Repair harness and connector.

OK

H

Check continuity between control unit connector terminal ② and body ground.
Continuity should not exist.

NG → Repair harness and connector.

OK

Check control unit pin terminals for damage or the connection of control unit harness connector.
Reconnect control unit harness connector. Then retest.

BR

Simpo PDF Merge and Split Unregistered Version - http://www.simpopdf.com

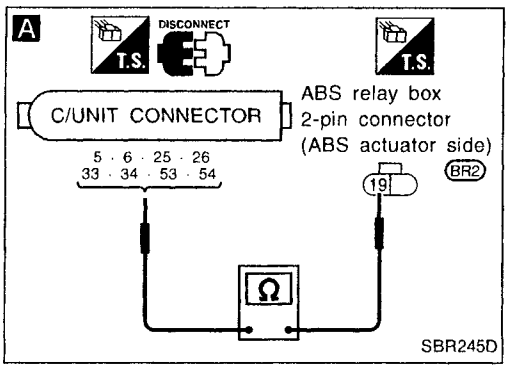

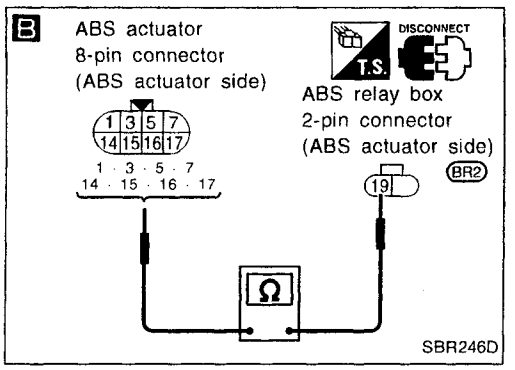

Diagnostic Procedure 3

ABS ACTUATOR SOLENOID VALVE (Malfunction code No. 41, 45, 51, 55, 42, 46, 52, 56)

1. Disconnect connectors from control unit, ABS actuator and ABS relay box. Check terminals for damage or loose connections. Then reconnect connectors.
2. Carry out self-diagnosis again.
   Does warning lamp activate again?

No → Inspection end

Yes ↓

A

ABS ACTUATOR SOLENOID VALVE CHECK

OK → Ⓐ (Go to next page.)

1. Disconnect connectors from control unit and ABS relay box.
2. Check resistance between control unit connector terminals and ABS relay box 2-pin connector (BR2) (ABS actuator side) terminal.

Code No.	Control unit	ABS relay box	Resistance
41	㉖	⑲	4.4 - 6.0Ω
45	㉝	⑲	
51	㉞	⑲	
55	㉕	⑲	
42	㊹	⑲	8.5 - 11.0Ω
46	⑤	⑲	
52	⑥	⑲	
56	㊸	⑲	

NG ↓

B

1. Disconnect ABS actuator 8-pin connector.
2. Check resistance between ABS actuator 8-pin connector (ABS actuator side) terminals and ABS relay box 2-pin connector (BR2) (ABS actuator side) terminal.

OK → Repair harness and connector between control unit connector terminal and ABS actuator 8-pin connector terminal.

Code No.	ABS actuator	ABS relay box	Resistance
41	⑮	⑲	4.4 - 6.0Ω
45	⑭	⑲	
51	⑰	⑲	
55	⑯	⑲	
42	③	⑲	8.5 - 11.0Ω
46	①	⑲	
52	⑦	⑲	
56	⑤	⑲	

NG ↓

Replace ABS actuator.

Simpo PDF Merge and Split Unregistered Version - http://www.simpopdf.com

Diagnostic Procedure 3 (Cont'd)

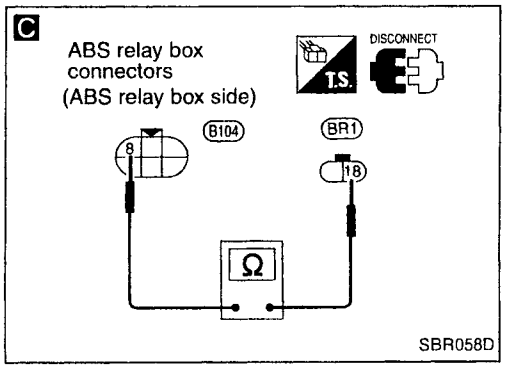

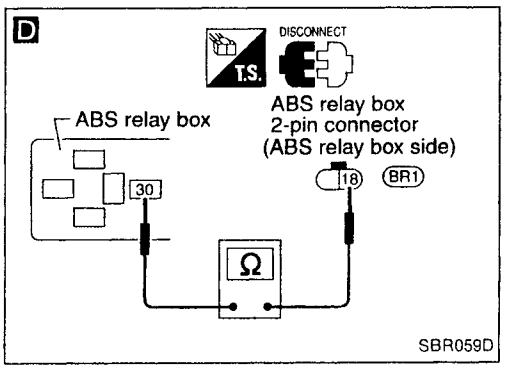

Ⓐ

C

1. Disconnect ABS relay box connectors.
2. Check continuity between ABS relay box 2-pin connector (BR1) (ABS relay box side) terminal ⑱ and 6-pin connector (B104) (ABS relay box side) terminal ⑧.

Continuity should exist.

OK → Go to Diagnostic Procedure 7, BR-81.

NG ↓

D

1. Remove solenoid valve relay.
2. Check continuity between ABS relay box 2-pin connector (BR1) (ABS relay side) terminal ⑱ and ABS relay box terminal ㉚.

Continuity should exist.

NG → Replace ABS relay box.

OK ↓

Go to Diagnostic Procedure 6, BR-79.

BR

Simpo PDF Merge and Split Unregistered Version - http://www.simpopdf.com

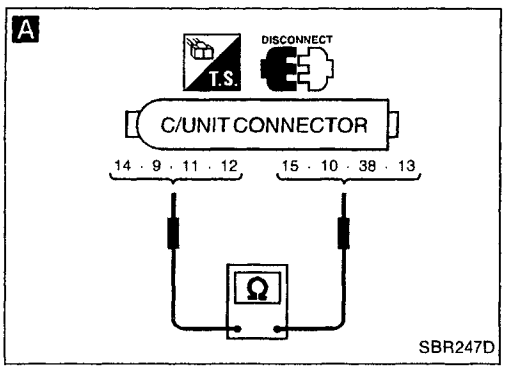

Diagnostic Procedure 4

WHEEL SENSOR OR ROTOR

(Malfunction code No. 21, 22, 25, 26, 31, 32, 35, 36 or 18)

1. Disconnect connectors from control unit and wheel sensor of malfunction code No. Check terminals for damage or loose connections. Then reconnect connectors.
2. Carry out self-diagnosis again.

Does warning lamp activate again?

No → Inspection end

Yes ↓

A

WHEEL SENSOR ELECTRICAL CHECK

OK → Ⓐ (See next page.)

1. Disconnect control unit connector.
2. Check resistance between control unit connector terminals.

Code No. 21 or 22 (Front RH wheel)
Terminals ⑭ and ⑮
Code No. 25 or 26 (Front LH wheel)
Terminals ⑨ and ⑩
Code No. 31 or 32 (Rear RH wheel)
Terminals ⑪ and ㊳
Code No. 35 or 36 (Rear LH wheel)
Terminals ⑫ and ⑬

Resistance: 0.8 - 1.2 kΩ

NG ↓

Note

CHECK WHEEL SENSOR.

Refer to WHEEL SENSOR in Electrical Components Inspection, BR-85.

NG → Note: Replace wheel sensor.

OK ↓

Note: Repair harness and connectors between control unit connector and wheel sensor connector.

Note: Wheel position should be distinguished by code No. except code No. 18 (sensor rotor).

Simpo PDF Merge and Split Unregistered Version - http://www.simpopdf.com

Diagnostic Procedure 4 (Cont'd)

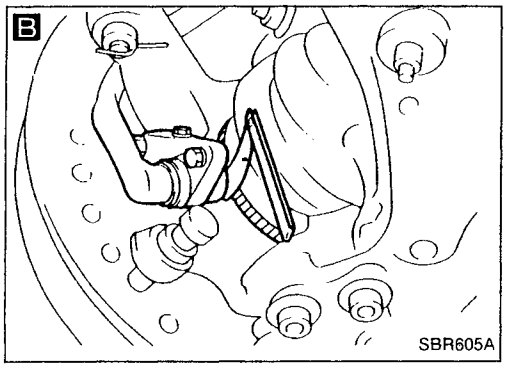

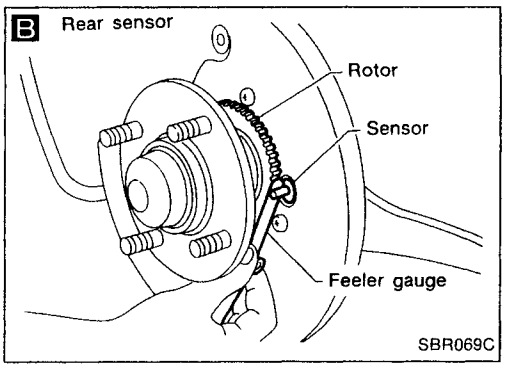

Ⓐ

Note

WHEEL SENSOR MECHANICAL CHECK

Check for inflation pressure, wear and size of each tire.

NG → Note: Adjust tire pressure or replace tire(s).

OK

Note

Check wheel bearing axial end play.

OK

B Note

Check clearance between sensor and rotor.

Clearance:

Front

0.1 - 1.1 mm

(0.004 - 0.043 in)

Rear

0.1 - 1.1 mm

(0.004 - 0.043 in)

NG → Note: Clean sensor fixing portion, or replace sensor.

OK

Note

Check sensor rotor for teeth damage.

NG → Note: Replace sensor rotor.

OK

Check control unit pin terminals for damage or the connection of control unit harness connector.
Reconnect control unit harness connector. Then retest.

Note: Wheel position should be distinguished by code No. except code No. 18 (sensor rotor).

BR

Simpo PDF Merge and Split Unregistered Version - http://www.simpopdf.com

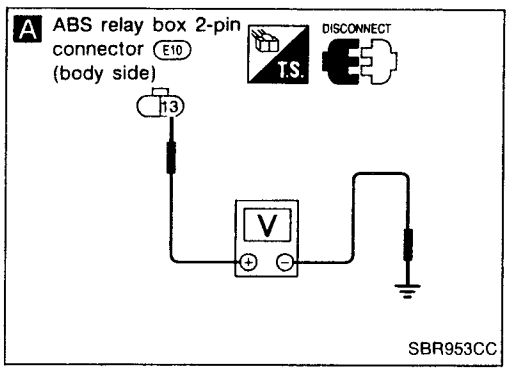

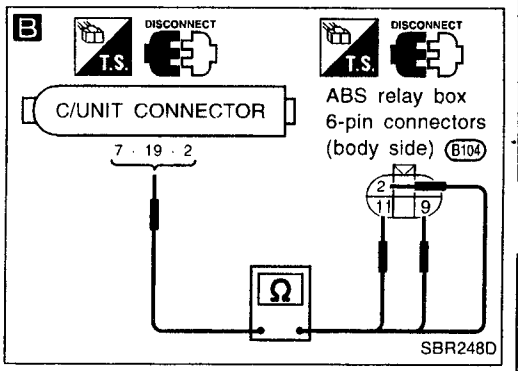

Diagnostic Procedure 5

MOTOR RELAY OR MOTOR

(Malfunction code No. 61)

MOTOR POWER SUPPLY CIRCUIT

Check fusible link d for ABS relay box. For fusible link layout, refer to POWER SUPPLY ROUTING in EL section.

NG → Ⓑ (Skip page.)

OK ↓

1. Disconnect connectors from control unit and ABS actuator. Check terminals for damage or loose connection. Then reconnect connectors.
2. Carry out self-diagnosis again.
Does warning lamp activate again?

No → Inspection end

Yes ↓

A

1. Disconnect ABS relay box 2-pin connector E10.
2. Check voltage between connector (body side) terminal 13 and ground.
Battery voltage should exist.

NG → Repair harness and connectors.

OK ↓

B

CIRCUIT CHECK

1. Disconnect ABS relay box 6-pin connector and control unit connector.
2. Check continuity between control unit connector terminals and ABS relay box 6-pin connector B104 (body side) terminals.

Control unit	ABS relay box
7	11
19	9
2	2

Continuity should exist.

NG → Repair harness and connectors.

OK ↓

MOTOR RELAY CHECK

Refer to MOTOR RELAY in Electrical Components Inspection, BR-85.

NG → Replace motor relay.

OK ↓

ACTUATOR MOTOR GROUND CHECK

Refer to ACTUATOR MOTOR GROUND in Ground Circuit Check, BR-66.

NG → Repair harness and terminals.

OK ↓

Ⓐ

(Go to next page.)

Simpo PDF Merge and Split Unregistered Version - http://www.simpopdf.com

Diagnostic Procedure 5 (Cont'd)

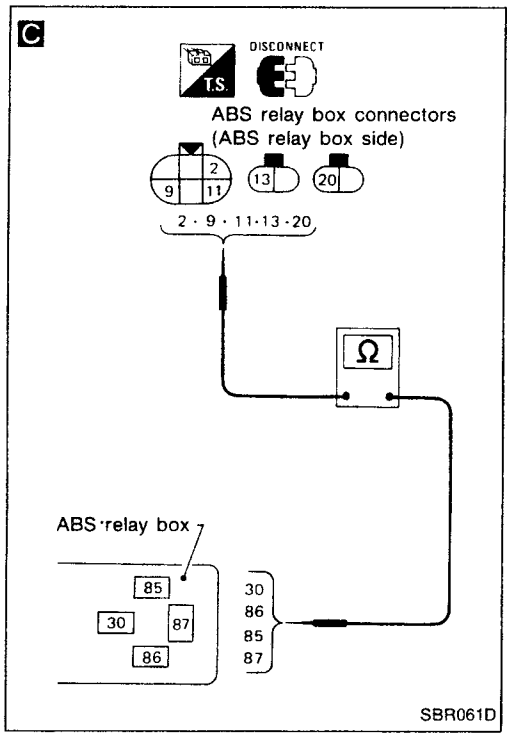

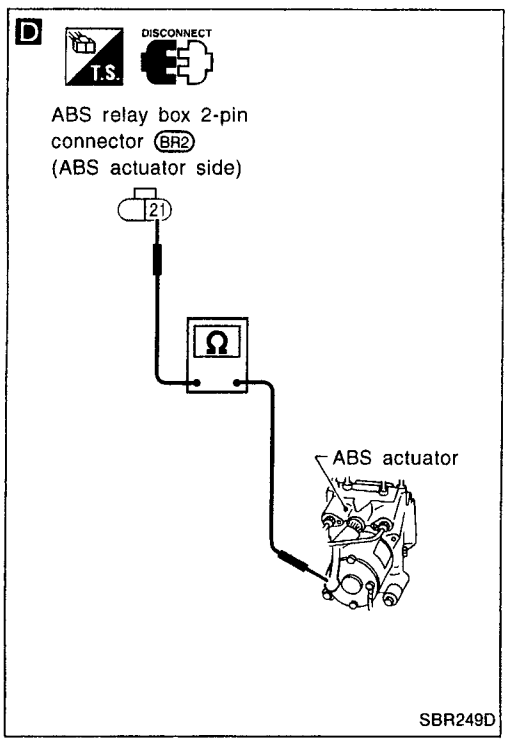

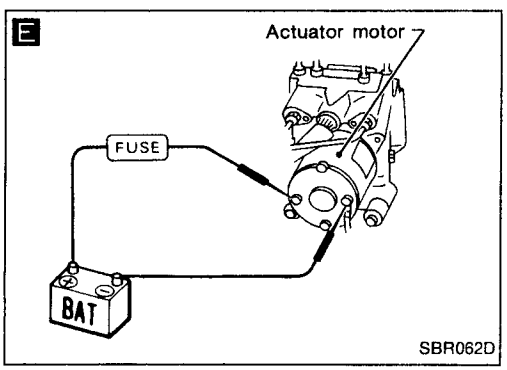

Ⓐ

C **MOTOR RELAY CIRCUIT** — NG → Replace ABS relay box.

1. Remove motor relay.
2. Check continuity between ABS relay box connectors (ABS relay box side) and ABS relay box terminals.

ABS relay box connector	ABS relay box terminal
②	⑧⑥
⑪	⑧⑤
⑨	③⑩
Connector E10 ⑬	⑧⑦
Connector BR1 ⑳	③⑩

Continuity should exist.

OK ↓

D Check continuity between ABS relay box 2-pin connector BR2 (ABS actuator side) terminal ㉑ and actuator motor positive terminal. — NG → Repair harness and connectors.

Continuity should exist.

OK ↓

E **MOTOR CHECK** — NG → Replace ABS actuator.

1. Disconnect actuator motor terminals.
2. Apply battery voltage to motor terminals.

Motor should operate.
Do not connect wire for more than 5 seconds.

OK ↓

Go to Diagnostic Procedure 7, BR-81.

BR

Simpo PDF Merge and Split Unregistered Version - http://www.simpopdf.com

Diagnostic Procedure 5 (Cont'd)

F ABS relay box 2-pin connector (E10) (body side)

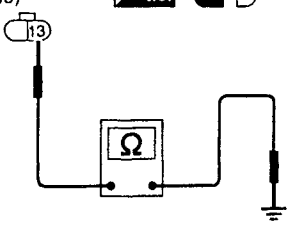

SBR957CC

G

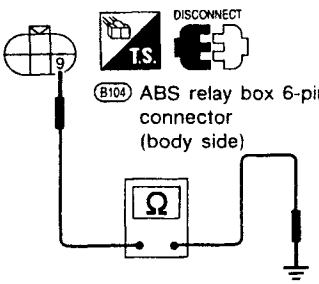

SBR958CB

H

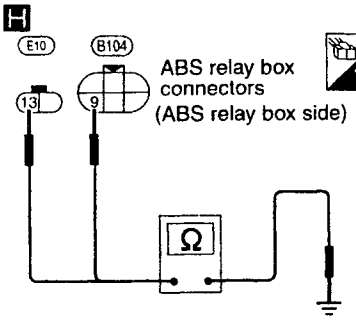

SBR065DB

I

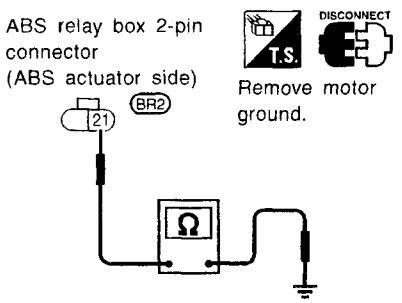

SBR250D

Ⓑ

Replace fusible link.
Does the fusible link blow out when ignition switch is turned "ON"?

No → Inspection end

Yes ↓

F

MOTOR POWER SUPPLY CIRCUIT

1. Disconnect battery cable and ABS relay box 2-pin connector (E10).
2. Check continuity between ABS relay box 2-pin connector (E10) (body side) terminal ⑬ and ground.
Continuity should not exist.

NG → Repair harness and connector.

OK ↓

G

1. Disconnect ABS relay box 6-pin connector and control unit connector.
2. Check continuity between ABS relay box 6-pin connector (B104) (body side) terminal ⑨ and ground.
Continuity should not exist.

NG → Repair harness and connector.

OK ↓

H

Check continuity between ABS relay box 6-pin connector (ABS relay box side) terminal ⑨ and ground, 2-pin connector (E10) (ABS relay box side) terminal ⑬ and ground.
Continuity should not exist.

NG → Replace ABS relay box.

OK ↓

I

1. Remove motor ground.
2. Check continuity between ABS relay box 2-pin connector (BR2) (ABS actuator side) terminal ⑳ and ground.
Continuity should not exist.

NG → Replace ABS actuator.

OK ↓

MOTOR CHECK

Go to E in Diagnostic Procedure 5 (preceding page).

OK ↓

Check control unit pin terminals for damage or the connection of control unit harness connector.
Reconnect control unit harness connector. Then retest.

Simpo PDF Merge and Split Unregistered Version - http://www.simpopdf.com

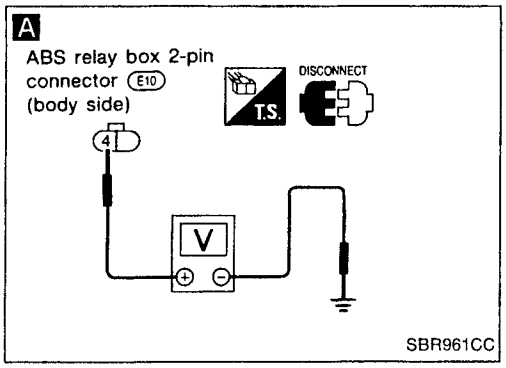

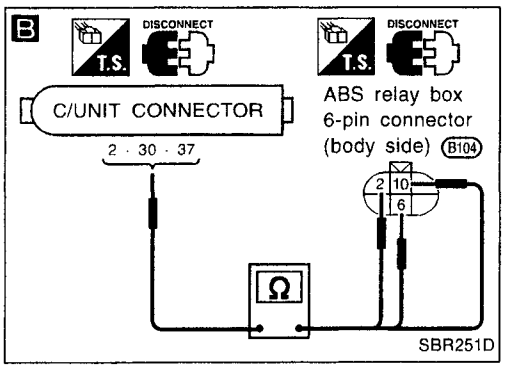

Diagnostic Procedure 6

SOLENOID VALVE RELAY

(Malfunction code No. 63)

SOLENOID VALVE POWER SUPPLY CHECK

Check fusible link C. For fusible link layout, refer to POWER SUPPLY ROUTING in EL section.

NG → Ⓐ (See next page.)

OK ↓

1. Disconnect connectors from control unit and ABS actuator. Check terminals for damage or loose connection. Then reconnect connectors.
2. Carry out self-diagnosis again.
   Does warning lamp activate again?

No → Inspection end

Yes ↓

GROUND CIRCUIT CHECK

Refer to CONTROL UNIT GROUND and ACTUATOR GROUND in Ground Circuit Check, BR-66.

NG → Repair harness and connectors.

OK ↓

A

SOLENOID VALVE POWER SUPPLY CHECK

1. Disconnect connectors from ABS relay box.
2. Check voltage between ABS relay box 2-pin connector E10 (body side) terminal ④ and ground.
   Battery voltage should exist.

NG → Repair harness and connector.

OK ↓

B

CIRCUIT CHECK

1. Disconnect control unit connector.
2. Check continuity between control unit connector terminals and ABS relay box connector B104 (body side) terminals.

Control unit	ABS relay box
㊲	⑥
②	②
㉚	⑩

Continuity should exist.

NG → Repair harness and connectors.

OK ↓

SOLENOID VALVE RELAY CHECK

Refer to SOLENOID VALVE RELAY in Electrical Components Inspection, BR-85.

NG → Replace solenoid valve relay.

OK ↓

Ⓑ

(Go to next page.)

BR

Simpo PDF Merge and Split Unregistered Version - http://www.simpopdf.com

Diagnostic Procedure 6 (Cont'd)

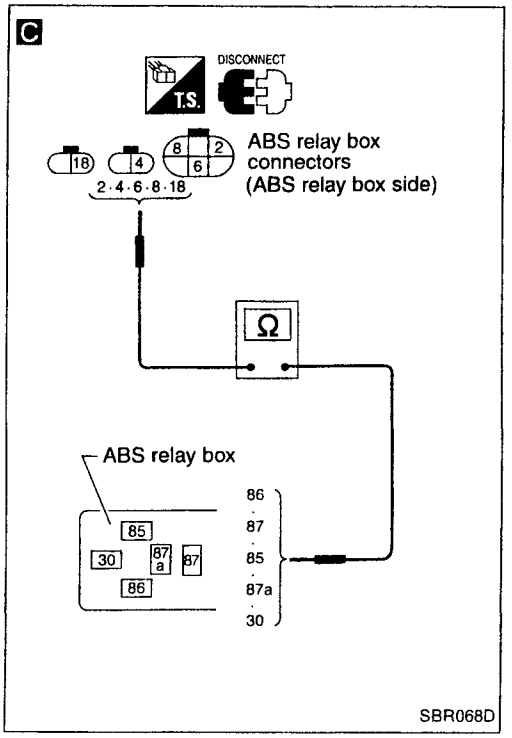

Ⓑ

C

SOLENOID VALVE RELAY CIRCUIT CHECK

NG → ● Replace ABS relay box.

Check continuity between ABS relay terminals and ABS relay box connector (ABS relay box side) terminals.

ABS relay box terminal	ABS relay box connector
㉚	Connector BR1 ⑱
㉗	Connector E10 ④
87a	⑧
㉕	⑥
㉖	②

Continuity should exist.

OK

Go to diagnostic procedure 3, BR-72.

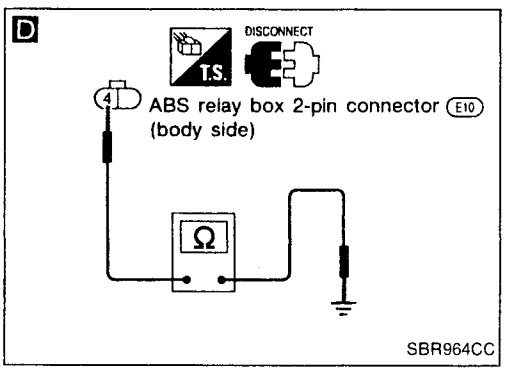

Ⓐ

Replace fusible link.
Does the fusible link blow out when ignition switch is turned "ON"?

No → Inspection end

Yes

D

RELAY UNIT POWER SUPPLY CIRCUIT

NG → Repair harness and connector.

1. Disconnect ABS relay box 2-pin connector E10.
2. Check continuity between ABS relay box 2-pin connector E10 (body side) terminal ④ and ground.
Continuity should not exist.

OK

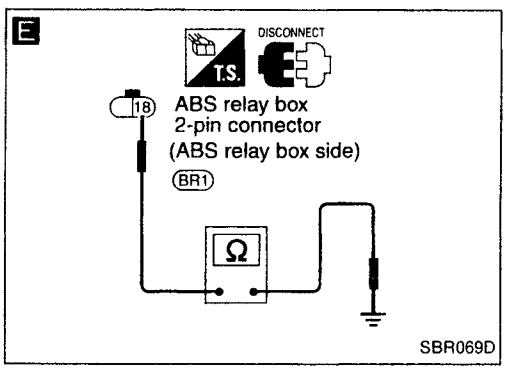

E

1. Disconnect ABS relay box connectors and control unit connector.
2. Check continuity between ABS relay box 2-pin connector BR1 (ABS relay box side) terminal ⑱ and ground.
Continuity should not exist.

NG → Replace ABS relay box.

OK

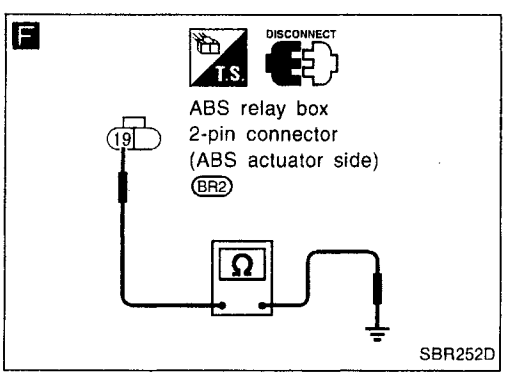

F

Check continuity between ABS relay box 2-pin connector BR2 (ABS actuator side) terminal ⑲ and ground.
Continuity should not exist.

NG → Replace ABS actuator.

OK

Go to Diagnostic Procedure 3, BR-72.

Simpo PDF Merge and Split Unregistered Version - http://www.simpopdf.com

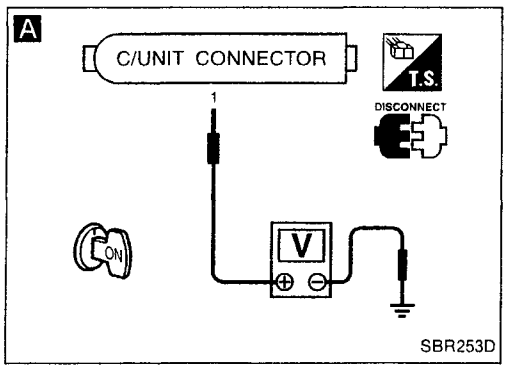

Diagnostic Procedure 7

POWER SUPPLY (Low voltage)

(Malfunction code No. 57)

1. Disconnect control unit connectors. Check terminals for damage or loose connections. Then reconnect connectors.
2. Carry out self-diagnosis again. **Does warning lamp activate again?**

No → Inspection end

Yes ↓

A

CONTROL UNIT POWER SUPPLY CHECK

1. Disconnect control unit connector.
2. Check voltage between control unit connector terminal ① and ground. **Battery voltage should exist when ignition switch is turned ON.**

NG → Ⓐ (See below.)

OK ↓

CONTROL UNIT GROUND CHECK

Refer to CONTROL UNIT GROUND in Ground Circuit Check, BR-66.

NG → Repair harness and connectors.

OK ↓

Check control unit pin terminals for damage or the connection of control unit harness connector.
Reconnect control unit harness connector. Then retest.

Ⓐ ↓

Check 7.5A fuse [12]. Refer to POWER SUPPLY ROUTING in EL section.

NG → Replace fuse.

OK ↓

Check continuity between battery and control unit connector terminal ①.

NG → Repair harness and connectors.

OK ↓

Check battery. Refer to BATTERY in EL section.

BR

Simpo PDF Merge and Split Unregistered Version - http://www.simpopdf.com

Diagnostic Procedure 8

CONTROL UNIT
(Malfunction code No. 71)

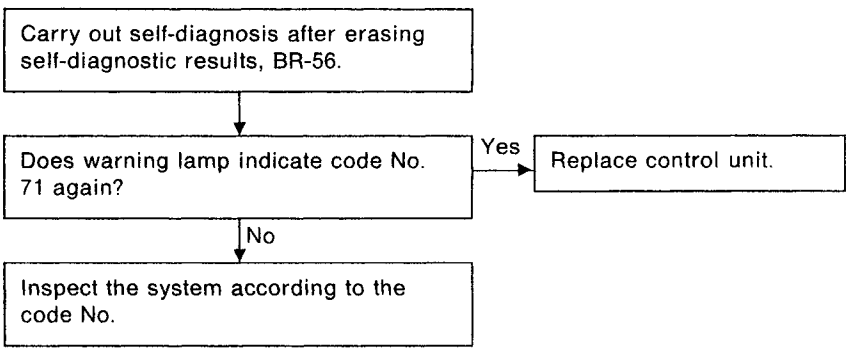

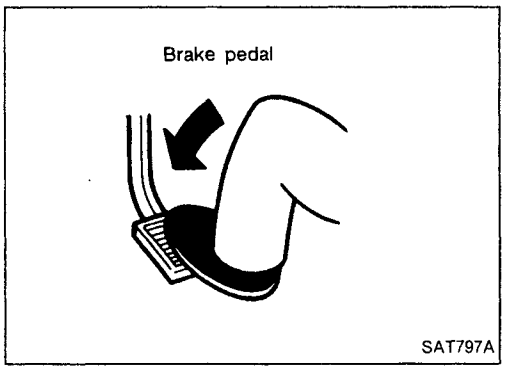

Diagnostic Procedure 9

SYMPTOM: Pedal vibration and noise

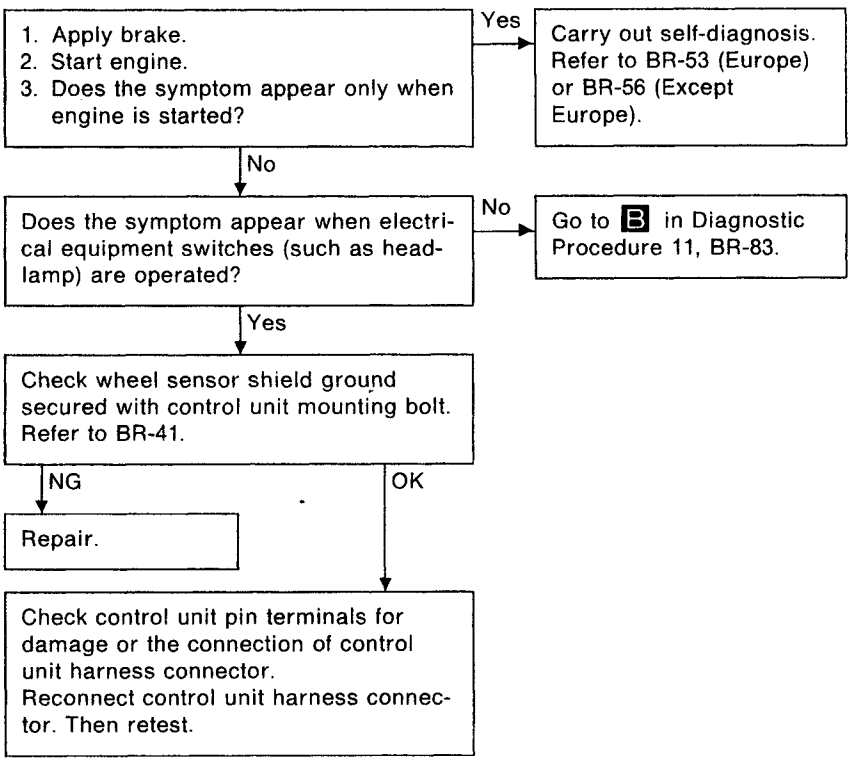

Note: ABS may operate and cause vibration under any of the following conditions.

- **Applying brake gradually when shifting or operating clutch.**
- **Low friction (slippery) road.**
- **High speed cornering.**
- **Driving over bumps and pot holes.**
- **Engine speed is over 5,000 rpm with vehicle stopped.**

Simpo PDF Merge and Split Unregistered Version - http://www.simpopdf.com

Diagnostic Procedure 10

SYMPTOM: Long stopping distance

Disconnect ABS relay box 6-pin connector and check whether stopping distance is still long.

No → Go to B in Diagnostic Procedure 11, BR-83.

Yes → Perform Preliminary Check and air bleeding.

Note: Stopping distance may be larger than vehicles without ABS when road condition is slippery.

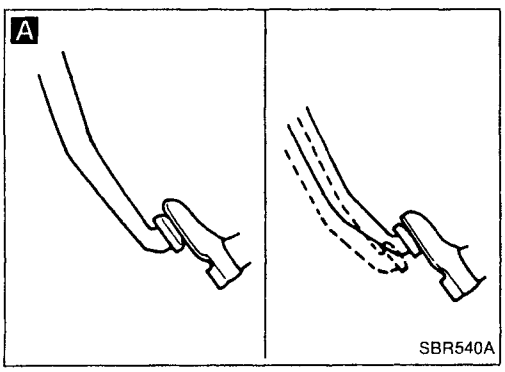

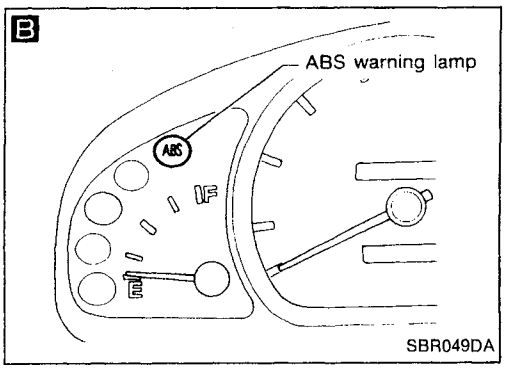

Diagnostic Procedure 11

SYMPTOM: Unexpected pedal action

A

Check brake pedal stroke. Is stroke excessively large?

Yes → Perform Preliminary Check, refer to BR-65.

No → Disconnect ABS relay box 6-pin connector and check whether brake is effective.

No → Perform Preliminary Check, refer to BR-65.

Yes → B

Ensure warning lamp remains off while driving.

NG → Carry out self-diagnosis. Refer to BR-53 (Europe) or BR-56 (Except Europe).

OK → **CHECK WHEEL SENSOR.**

1. Check wheel sensor connector for terminal damage or loose connection.
2. Perform wheel sensor mechanical check.
   Refer to B in Diagnostic Procedure 4, BR-75.

NG → Repair.

OK → Check control unit pin terminals for damage or the connection of control unit harness connector.
Reconnect control unit harness connector. Then retest.

BR

Simpo PDF Merge and Split Unregistered Version - http://www.simpopdf.com

Diagnostic Procedure 12

SYMPTOM: ABS does not work.

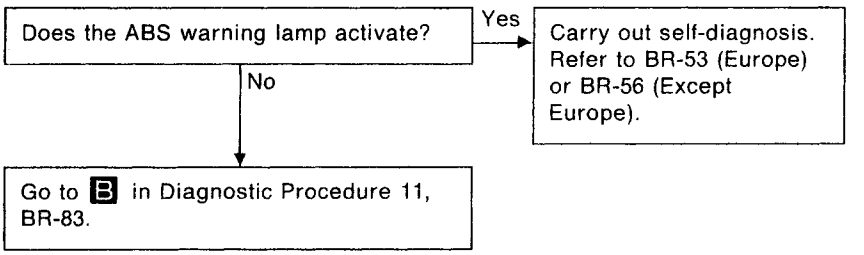

Note: ABS does not work when vehicle speed is under 10 km/h (6 MPH).

Diagnostic Procedure 13

SYMPTOM: ABS works frequently.

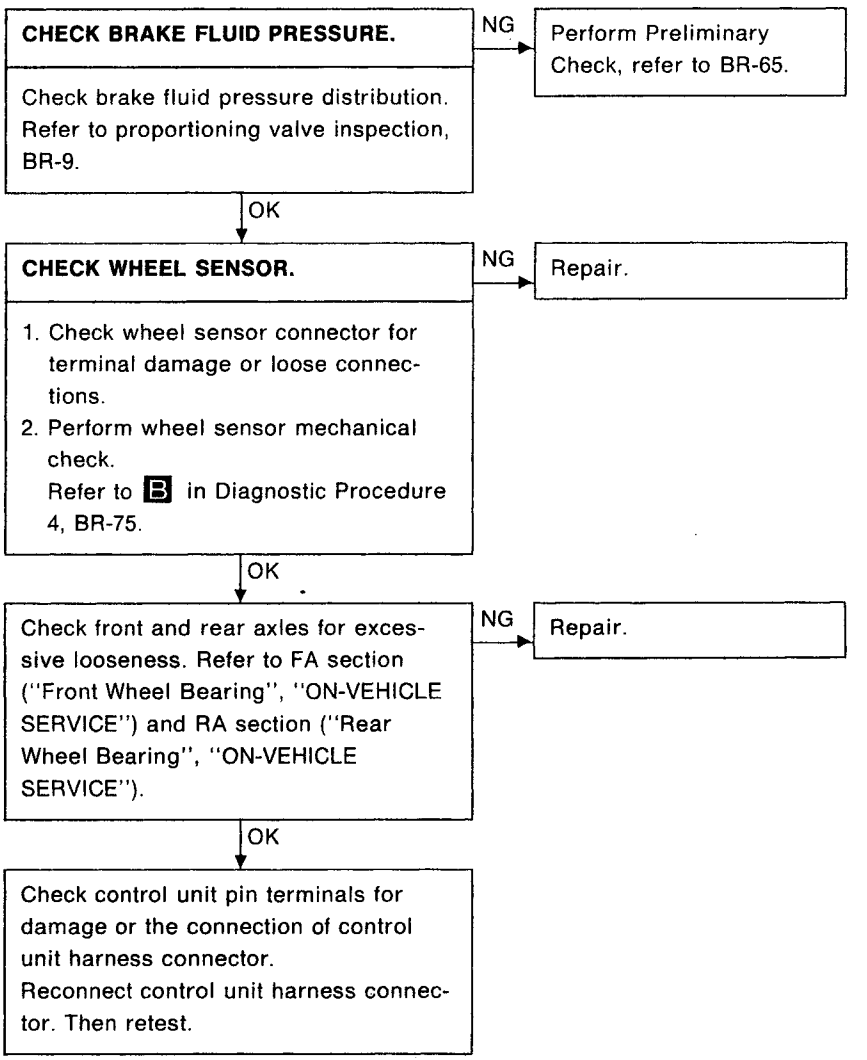

Simpo PDF Merge and Split Unregistered Version - http://www.simpopdf.com

Electrical Components Inspection

WHEEL SENSOR

Check resistance for each sensor.

Resistance: 0.8 - 1.2 kΩ

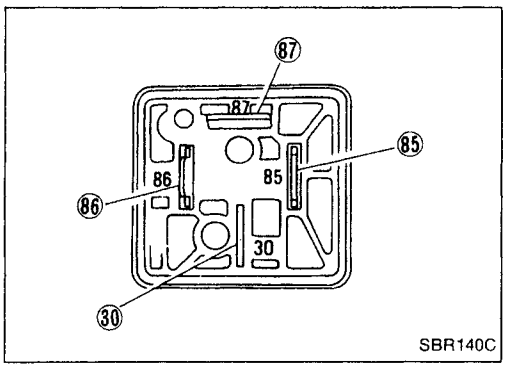

SBR140C

ACTUATOR MOTOR RELAY

Condition	Continuity existence between terminals 30 and 87
Battery voltage not applied between terminals 85 and 86.	No
Battery voltage applied between terminals 85 and 86.	Yes

While applying battery voltage to relay terminals, insert fuse into the circuit.

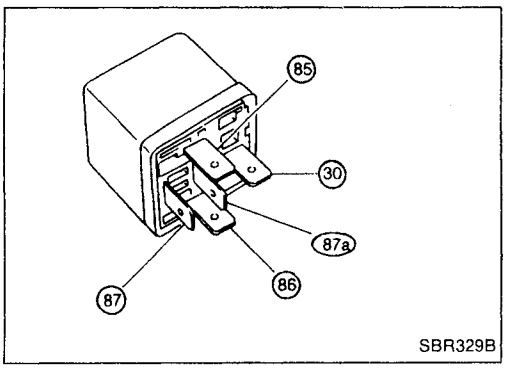

SBR329B

SOLENOID VALVE RELAY

Condition	Continuity existence between terminals 30 and 87a	Continuity existence between terminals 30 and 87
Battery voltage not applied between terminals 85 and 86.	Yes	No
Battery voltage applied between terminals 85 and 86.	No	Yes

While applying battery voltage to relay terminals, insert fuse into the circuit.

BR

Simpo PDF Merge and Split Unregistered Version - http://www.simpopdf.com

General Specifications

BRAKE UNIT (Europe)

Applied model	Without ABS			With ABS		
	GA14DE	GA16DE	CD20	GA14DE	GA16DE	CD20
	Standard			Option		
Front brake						
Brake model	CL22VD	CL22VE		CL22VD	CL22VE	
Cylinder bore diameter mm (in)	54.0 (2.126)					
Pad length x width x thickness mm (in)	106 x 39.5 x 11.0 (4.17 x 1.555 x 0.433)					
Rotor outer diameter x thickness mm (in)	232 x 18 (9.13 x 0.71)		247 x 18 (9.72 x 0.71)	232 x 18 (9.13 x 0.71)		247 x 18 (9.72 x 0.71)
Rear brake						
Brake model	LT18C			CL7HB		
Cylinder bore diameter mm (in)	15.87 (5/8)			30.23 (1-1/4)		
Lining or pad length x width x thickness mm (in)	172.8 x 30 x 4 (6.80 x 1.18 x 0.16)			94 x 29 x 10 (3.70 x 1.14 x 0.39)		
Drum inner diameter or rotor outer diameter x thickness mm (in)	180 (7.09)			234 x 7 (9.21 x 0.28)		
Master cylinder						
Cylinder bore diameter mm (in)	20.64 (13/16)			22.22 (7/8)		
Control valve						
Valve model	Dual proportioning valve built into master cylinder			Dual proportioning valve separated from master cylinder		
Split point [kPa (bar, kg/cm^2, psi)] x reducing ratio	3,923 (39.2, 40, 569) x 0.4			3,923 (39.2, 40, 569) x 0.4		
Brake booster						
Booster model	M195T					
Diaphragm diameter mm (in)	Primary: 205 (8.07) Secondary: 180 (7.09)					
Recommended brake fluid	DOT 3 or DOT 4					

Simpo PDF Merge and Split Unregistered Version - http://www.simpopdf.com

General Specifications (Cont'd)

BRAKE UNIT (Except for Europe)

Applied model	Except for Australia	Australia		Except for Australia	Australia	
	Without ABS			With ABS		
	GA15DE, GA16DE	GA16DE	SR20DE	GA15DE, GA16DE	GA16DE	SR20DE
	Standard	Standard		Option	Option	
Front brake Brake model	CL22VD	CL22VE	AD22VF	CL22VD	CL22VE	AD22VF
Cylinder bore diameter mm (in)	54.0 (2.126)					
Pad length x width x thickness mm (in)	106 x 39.5 x 11.0 (4.17 x 1.555 x 0.433)		106.8 x 43.8 x 10.0 (4.20 x 1.724 x 0.394)	106 x 39.5 x 11.0 (4.17 x 1.555 x 0.433)		106.8 x 43.8 x 10.0 (4.20 x 1.724 x 0.394)
Rotor outer diameter x thickness mm (in)	232 x 18 (9.13 x 0.71)	247 x 18 (9.72 x 0.71)	257 x 26 (10.12 x 1.02)	232 x 18 (9.13 x 0.71)	247 x 18 (9.72 x 0.71)	257 x 26 (10.12 x 1.02)
Rear brake Brake model	LT18C		CL9HC	CL7HB		CL9HC
Cylinder bore diameter mm (in)	15.87 (5/8)		33.96 (1-3/8)	30.23 (1-1/4)		33.96 (1-3/8)
Lining or pad length x width x thickness mm (in)	172.8 x 30 x 4 (6.80 x 1.18 x 0.16)		89.1 x 39.5 x 10.0 (3.508 x 1.555 x 0.394)	94 x 29 x 10 (3.70 x 1.14 x 0.39)		89.1 x 39.5 x 10.0 (3.508 x 1.555 x 0.394)
Drum inner diameter or rotor outer diameter x thickness mm (in)	180 (7.09)		258 x 9.0 (10.16 x 0.354)	234 x 7 (9.21 x 0.28)		258 x 9.0 (10.16 x 0.354)
Master cylinder Cylinder bore diameter mm (in)	20.64 (13/16)	22.22 (7/8)	23.81 (15/16)	22.22 (7/8)		23.81 (15/16)
Control valve Valve model	Dual proportioning valve built into master cylinder			Dual proportioning valve separated from master cylinder		
Split point [kPa (bar, kg/cm^2, psi)] x reducing ratio	3,923 (39.2, 40, 569) x 0.4	3,923 (39.2, 40, 569) x 0.4	1,961 (19.6, 20, 284) x 0.2	3,923 (39.2, 40, 569) x 0.4	2,942 (29.4, 30, 427) x 0.2	1,961 (19.6, 20, 284) x 0.2
Brake booster Booster model	S205 or C205	M195T				
Diaphragm diameter mm (in)	205 (8.07)	Primary: 205 (8.07) Secondary: 180 (7.09)				
Recommended brake fluid	DOT 3					

Simpo PDF Merge and Split Unregistered Version - http://www.simpopdf.com

Inspection and Adjustment

DISC BRAKE

Unit: mm (in)

Brake model	Front		Rear	
	CL22VD, CL22VE	AD22VF	CL7HB	CL9HC
Pad wear limit Minimum thickness	2.0 (0.079)		1.5 (0.059)	
Rotor repair limit Minimum thickness	16.0 (0.630)	24.0 (0.945)	6.0 (0.236)	8.0 (0.315)
Maximum runout	0.07 (0.0028)			
Maximum thickness variation	0.02 (0.0008)			

DRUM BRAKE

Unit: mm (in)

Brake model	Rear
	LT18C
Lining wear limit Minimum thickness	1.5 (0.059)
Drum repair limit Maximum inner diameter	181 (7.13)
Out-of-round	0.03 (0.0012) or less

BRAKE PEDAL

Unit: mm (in)

Applied model	RHD	LHD
Free height M/T	155.0 - 165.0 (6.10 - 6.50)	148.0 - 158.0 (5.83 - 6.22)
A/T	164.0 - 174.0 (6.46 - 6.85)	157.0 - 167.0 (6.18 - 6.57)
Depressed height [under force of 490 N (50 kg, 110 lb) with engine running]	See below.	
Clearance between switches and pedal stopper bracket	0.3 - 1.0 (0.012 - 0.039)	

Depressed Height [Under force of 490 N (50 kg, 110 lb) with engine running]

Unit: mm (in)

Applied model	RHD	LHD
M/T	75 (2.95) or more	
A/T	85 (3.35) or more	

PARKING BRAKE CONTROL

Brake type	Drum	Disc
Control type	Center lever	
Number of notches [under force of 196 N (20 kg, 44 lb)]	7 - 8	8 - 9
Number of notches when warning switch comes on	1 or less	

Simpo PDF Merge and Split Unregistered Version - http://www.simpopdf.com

SECTION BT

CONTENTS

PRECAUTIONS 2
- Service Notice 2
- Supplemental Restraint System (SRS) "AIR BAG" (Dual Air Bag System) 2
- Supplemental Restraint System (SRS) "AIR BAG" (Single Air Bag System) 2

GENERAL SERVICING 3
- Clip and Fastener 3

BODY END 5
- Body Front End 5
- Body Rear End and Opener 7

DOOR 11
- Front Door 11
- Rear Door 12

INSTRUMENT PANEL 13

INTERIOR TRIM 16
- Side and Floor Trim 16
- Door Trim 22
- Roof Trim 24
- Trunk Room Trim 26
- Back Door Trim 27

EXTERIOR 28

SEAT 35
- Front Seat 35
- Heated Seat 36
- Rear Seat 37

SUNROOF 39

WINDSHIELD AND WINDOWS 43
- Windshield and Rear Window 43
- Back Door Window 44
- Rear Side Window 45

MIRROR 46
- Door Mirror 46

BODY ALIGNMENT 47
- Engine Compartment 47
- Underbody 49

★ **For seat belt, refer to MA and RS section.**
★ **For wiring diagrams of body electrical systems, refer to EL section.**

Simpo PDF Merge and Split Unregistered Version - http://www.simpopdf.com

Service Notice

- When removing or installing various parts, place a cloth or padding onto the vehicle body to prevent scratches.
- Handle trim, molding, instruments, grille, etc. carefully during removing or installing. Be careful not to soil or damage them.
- Apply sealing compound where necessary when installing parts.
- When applying sealing compound, be careful that the sealing compound does not protrude from parts.
- When replacing any metal parts (for example body outer panel, members, etc.), be sure to take rust prevention measures.

Supplemental Restraint System (SRS) "AIR BAG" (Dual Air Bag System)

The Supplemental Restraint System "Air Bag", used along with a seat belt, helps to reduce the risk or severity of injury to the driver and front passenger in a frontal collision. The Supplemental Restraint System consists of air bag modules (located in the center of the steering wheel and on the instrument panel on the passenger side), a diagnosis sensor unit, warning lamp, wiring harness and spiral cable. Information necessary to service the system safely is included in the **RS section** of this Service Manual.

WARNING:

- **To avoid rendering the SRS inoperative, which could increase the risk of personal injury or death in the event of a collision which would result in air bag inflation, all maintenance must be performed by an authorized NISSAN dealer.**
- **Improper maintenance, including incorrect removal and installation of the SRS, can lead to personal injury caused by unintentional activation of the system.**
- **Do not use electrical test equipment on any circuit related to the SRS unless instructed to in this Service Manual. SRS wiring harnesses are covered with yellow insulation either just before the harness connectors or for the complete harness, for easy identification.**

Supplemental Restraint System (SRS) "AIR BAG" (Single Air Bag System)

The Supplemental Restraint System "Air Bag", used along with a seat belt, helps to reduce the risk or severity of injury to the driver in a frontal collision. The Supplemental Restraint System consists of an air bag module (located in the center of the steering wheel), a diagnosis sensor unit, warning lamp, wiring harness and spiral cable. Information necessary to service the system safely is included in the **RS section** of this Service Manual.

WARNING:

- **To avoid rendering the SRS inoperative, which could increase the risk of personal injury or death in the event of a collision which would result in air bag inflation, all maintenance must be performed by an authorized NISSAN dealer.**
- **Improper maintenance, including incorrect removal and installation of the SRS, can lead to personal injury caused by unintentional activation of the system.**
- **Do not use electrical test equipment on any circuit related to the SRS unless instructed to in this Service Manual.**

Simpo PDF Merge and Split Unregistered Version - http://www.simpopdf.com

Clip and Fastener

- Clips and fasteners in BT section correspond to the following numbers and symbols.
- Replace any clips and/or fasteners which are damaged during removal or installation.

Symbol No.	Shapes	Removal & Installation
C101	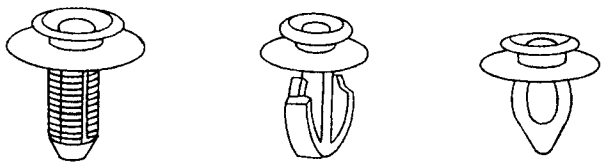 SBF302H	**Removal:** Remove by bending up with flat-bladed screwdrivers or clip remover. 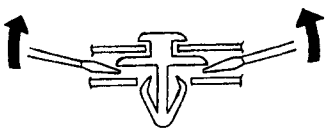 SBF367BA
C103	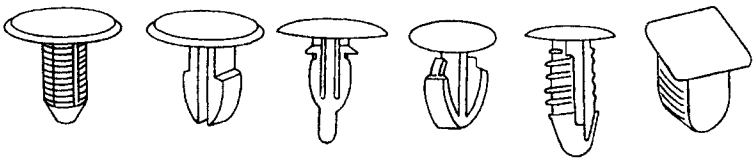 SBT095	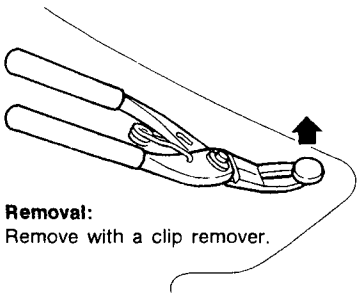 **Removal:** Remove with a clip remover. SBF423H
C205	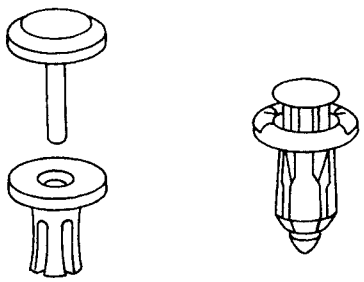 MBF518B	**Removal:** 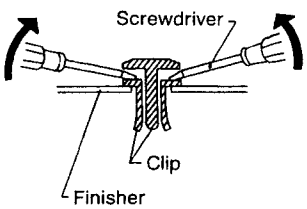 SBF638C
C206	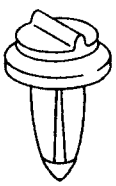 MBF519B	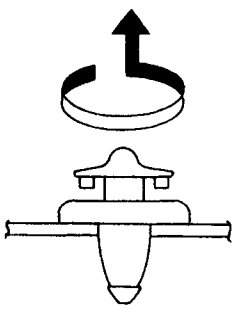 MBF520B

BT

Simpo PDF Merge and Split Unregistered Version - http://www.simpopdf.com

Clip and Fastener (Cont'd)

Symbol No.	Shapes	Removal & Installation
CE103 	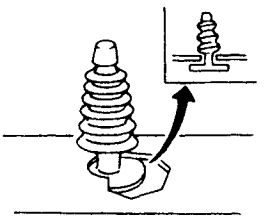 SBF104B	**Removal:** 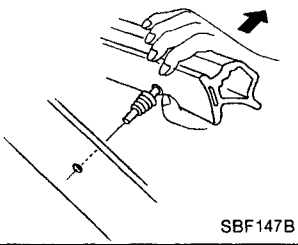 SBF147B
CF118	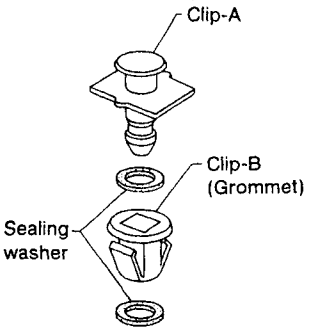 SBF151D	**Removal:** 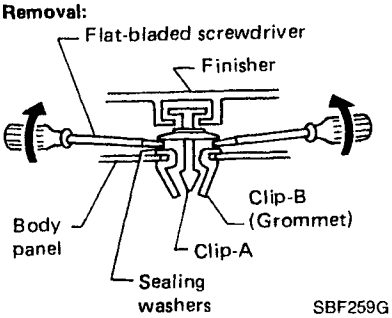 SBF259G
CG101 	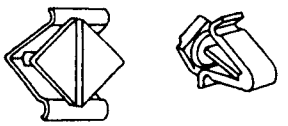 SBF145B	**Removal:**  Rotate 45° to remove.  **Removal:** **Installation:** 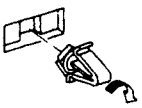 SBF085B
CR103	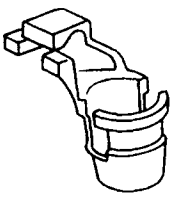 SBF768B	**Removal:** Holder portion of clip must be spread out to remove rod. 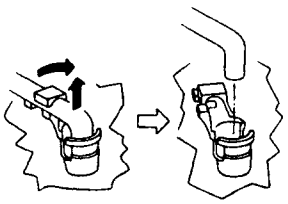 SBF770B
CS101 	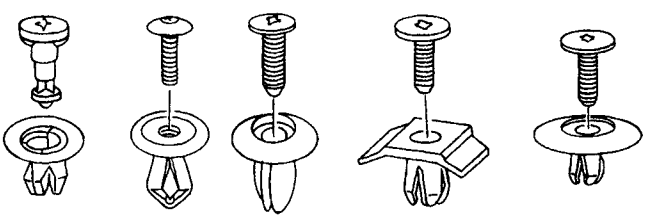 SBF078B	**Removal:** 1. Screw out with a Phillips screwdriver. 2. Remove female portion with flat-bladed screwdriver. 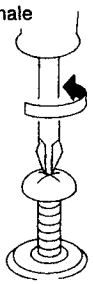 SBF992G

Simpo PDF Merge and Split Unregistered Version - http://www.simpopdf.com

Body Front End

- When removing or installing hood, place a cloth or other padding on hood. This prevents vehicle body from being scratched.
- Bumper fascia is made of plastic. Do not use excessive force and be sure to keep oil away from it.
- Hood adjustment: Adjust at hinge portion.
- Hood lock adjustment: After adjusting, check hood lock control operation. Apply a coat of grease to hood locks engaging mechanism.
- Hood opener: Do not attempt to bend cable forcibly. Doing so increases effort required to unlock hood.

REMOVAL — Front bumper assembly

① Remove front air spolier. Refer to "Front air spoiler" in "EXTERIOR" for details, BT-33.
② Remove bolts securing bumper fascia to engine undercover.
③ Remove clips (CG101) securing front grille.
④ Remove screws securing left and right turn signal lamps and remove the lamps.
⑤ Remove screws and clips (CS101) *1, (C205) *2 securing left and right sides of front fender protector.
⑥ Remove bolts securing left and right front fenders to bumper fascia.
⑦ Remove bolts and clips (CS101) securing retainer to bumper fascia.
⑧ Extract bumper fascia assembly.

*1: Standard bumper type
*2: Aero bumper type

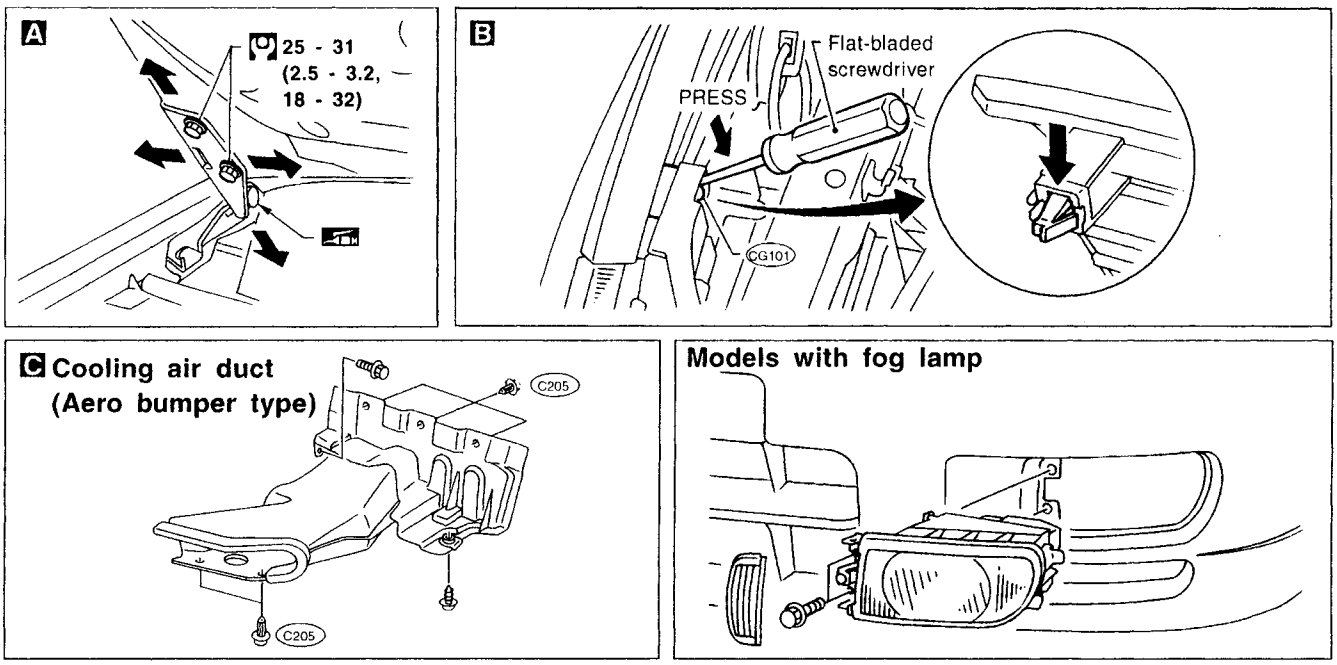

: N•m (kg-m, ft-lb)

SBT037

BT

Simpo PDF Merge and Split Unregistered Version - http://www.simpopdf.com

Body Front End (Cont'd)

SEC. 261•620•623•650•656

Hood lock adjustment
- Adjust hood so that hood primary lock meshes at a position 1 to 1.5 mm (0.039 to 0.059 in) lower than fender.
- After hood lock adjustment, adjust bumper rubber.
- When securing hood lock, ensure it does not tilt. Striker must be positioned at the center of hood primary lock.
- After adjustment, ensure that hood primary and secondary lock operate properly.

Hood lock secondary latch hooking length

More than 5.0 mm (0.197 in)

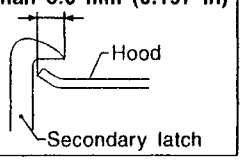

Bumper rubber adjustment
- Adjust so that hood is aligned with fender. At that time deflection is approx. 2 mm (0.08 in).

[Bumper rubber free height is approx. 13 mm (0.51 in).]

★ : Bumper assembly mounting bolts, screw & clips.

: N•m (kg-m, ft-lb)

SBT038

Simpo PDF Merge and Split Unregistered Version - http://www.simpopdf.com

Body Rear End and Opener

4-DOOR SEDAN

- When removing or installing trunk lid, place a cloth or other padding on rear fender. This prevents vehicle body from being scratched.
- Bumper fascia is made of plastic. Do not use excessive force and be sure to keep oil away from it.
- Trunk lid adjustment: Adjust at hinge-trunk lid portion for proper trunk lid fit.
- Trunk lid lock system adjustment: Adjust striker so that it is in the center of the lock. After adjustment, check trunk lid lock operation.
- Opener cable: Do not attempt to bend cable using excessive force.
- After installation, make sure that trunk lid and fuel filler lid open smoothly.

REMOVAL — Rear bumper assembly

① Remove bolts securing left and right rear fenders to bumper fascia.
② Remove bolts and clips (CS101) securing bumper lower side to bumper fascia.
③ Remove clips (CS101) securing rear panel upper to bumper fascia.
④ Extract bumper fascia assembly.

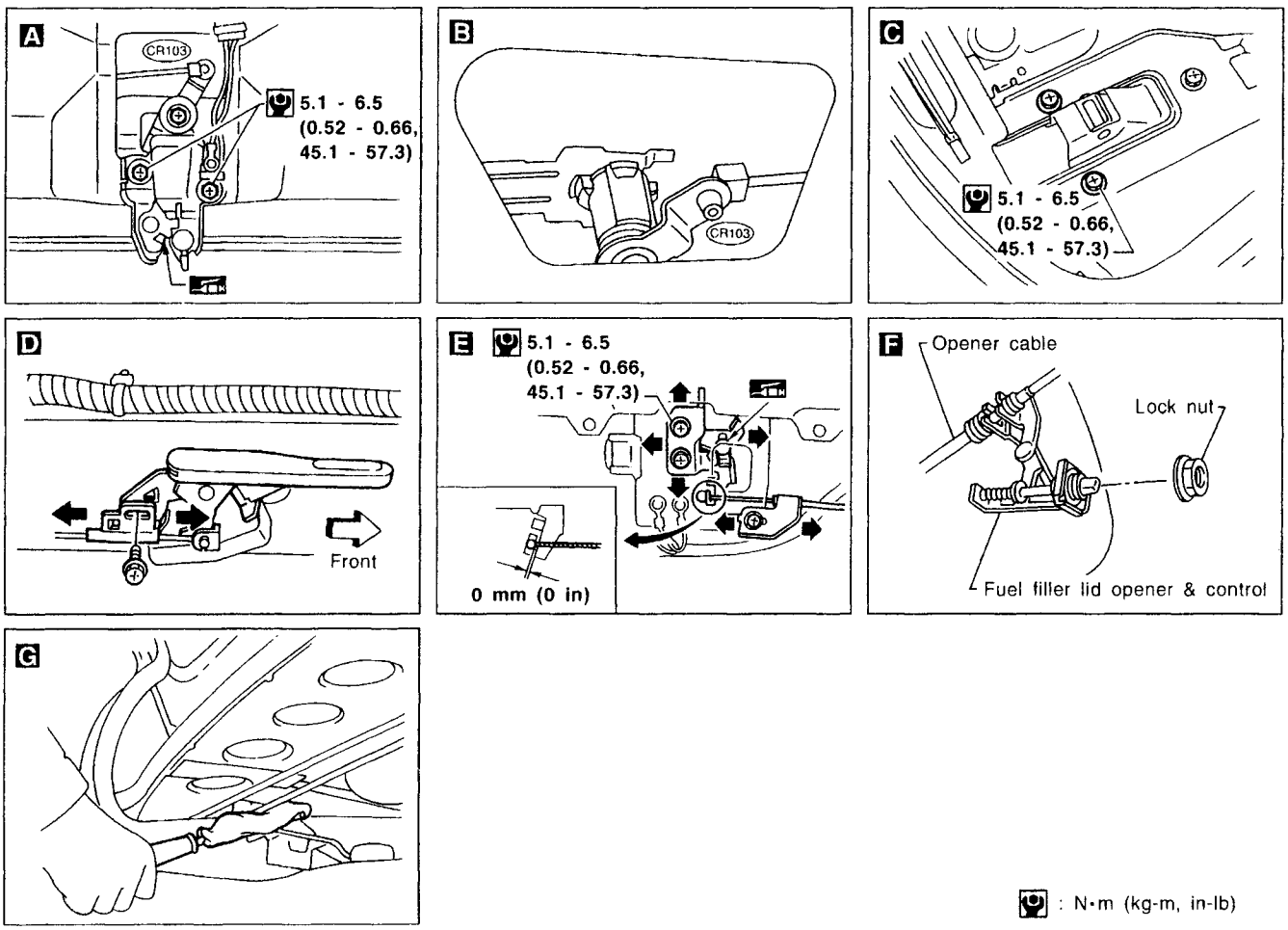

: N·m (kg-m, in-lb)

SBT039

BT

Simpo PDF Merge and Split Unregistered Version - http://www.simpopdf.com

Body Rear End and Opener (Cont'd)

SEC. 843•844•850•998

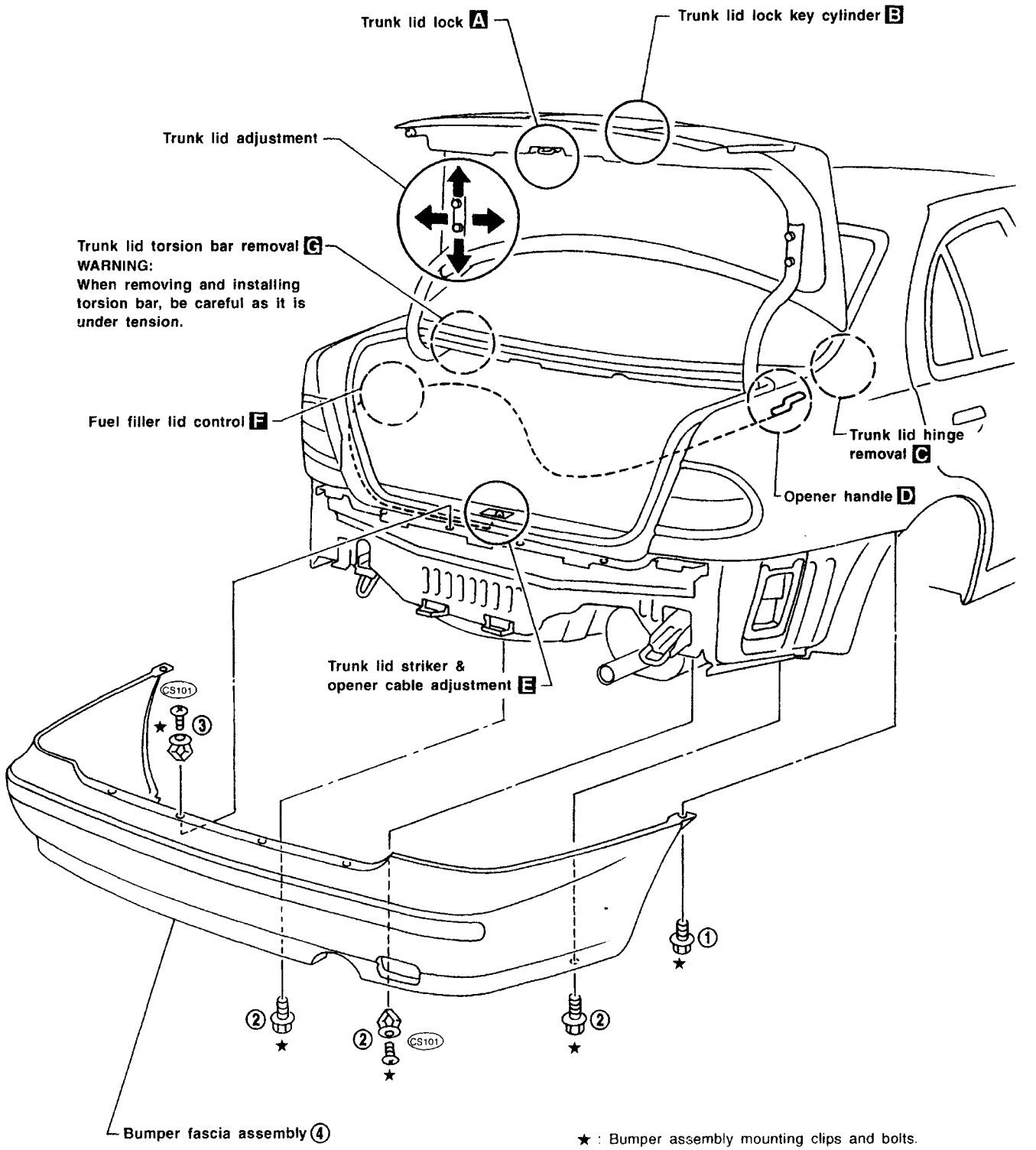

SBT040

Simpo PDF Merge and Split Unregistered Version - http://www.simpopdf.com

Body Rear End and Opener (Cont'd)

3-DOOR AND 5-DOOR HATCHBACK

- Back door adjustment: Adjust at hinge-body portion for proper back door fit.
- Back door lock system adjustment: Adjust lock & striker so that they are in the center. After adjustment, check back door lock operation.

WARNING:

- **Be careful not to scratch back door stay when installing back door. A scratched stay may cause gas leakage.**
- **The contents of the back door stay are under pressure. Do not take apart, puncture, apply heat or allow fire near it.**
- Opener cable: Do not attempt to bend cable using excessive force.
- After installation, make sure that back door and fuel filler lid open smoothly.

REMOVAL — Rear bumper assembly

① Remove bolts securing left and right rear fenders to bumper fascia.
② Remove bolts and clips (CS101) securing bumper lower side to bumper fascia.
③ Remove clips (C205) securing rear panel upper to bumper fascia.
④ Extract bumper fascia assembly.

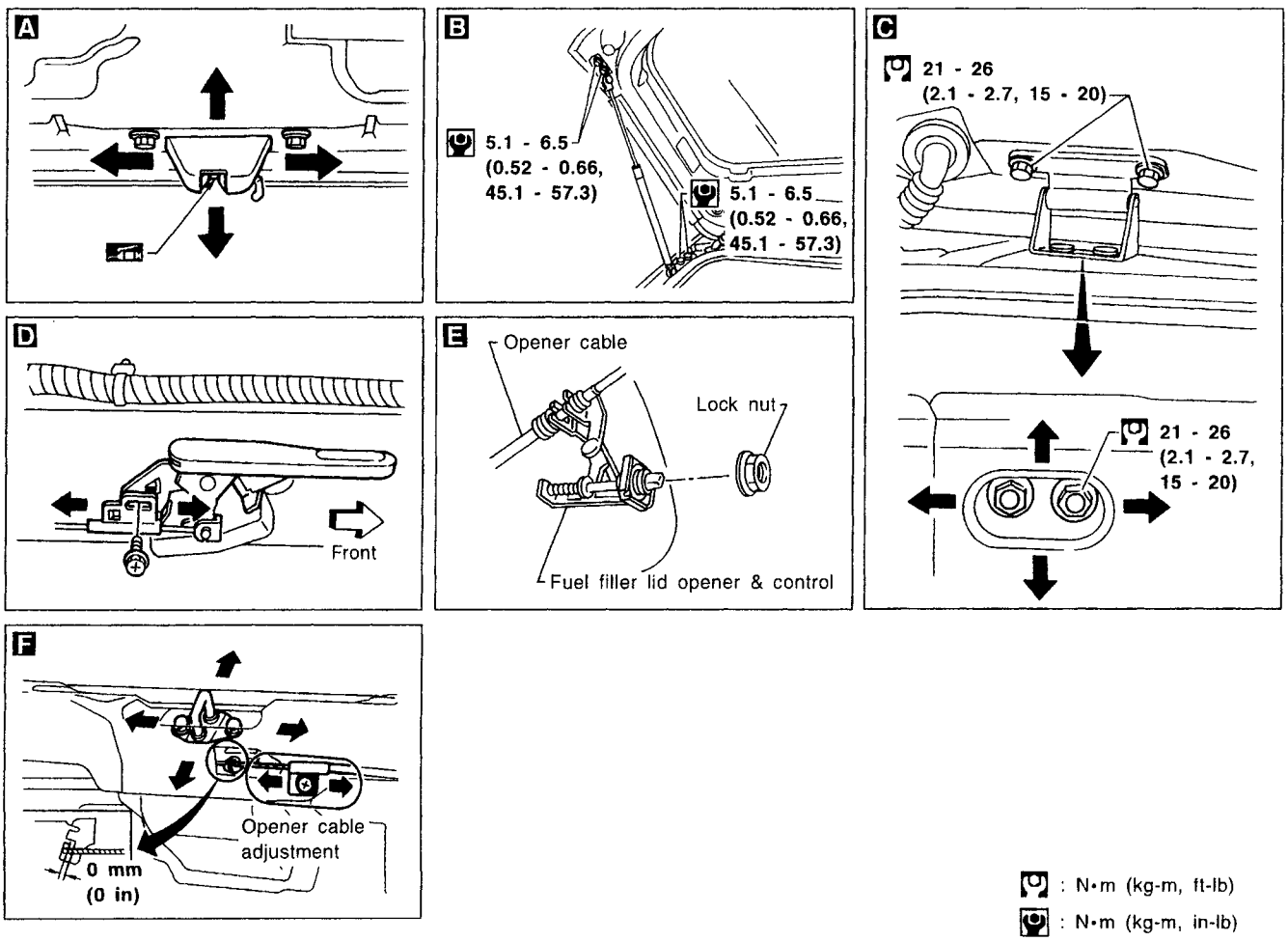

: N•m (kg-m, ft-lb)
: N•m (kg-m, in-lb)

SBT041

BT

Simpo PDF Merge and Split Unregistered Version - http://www.simpopdf.com

Body Rear End and Opener (Cont'd)

SEC. 850•900•905

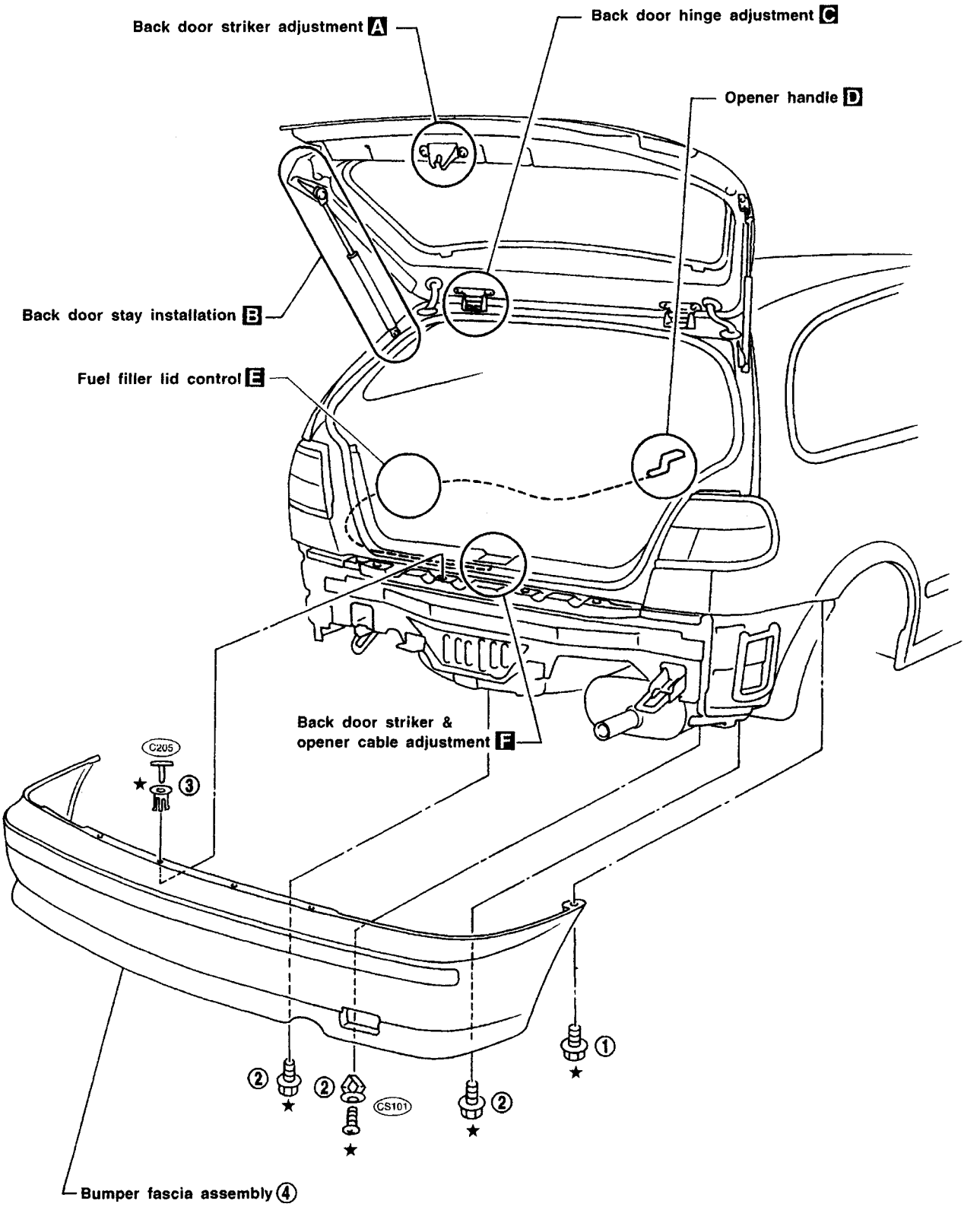

★ : Bumper assembly mounting clips and bolts.

SBT042

Simpo PDF Merge and Split Unregistered Version - http://www.simpopdf.com

Front Door

- For removal of door trim, refer to "Door Trim" in "INTERIOR TRIM" for details, BT-22.
- After adjusting door or door lock, check door lock operation.

SEC. 800•803•805

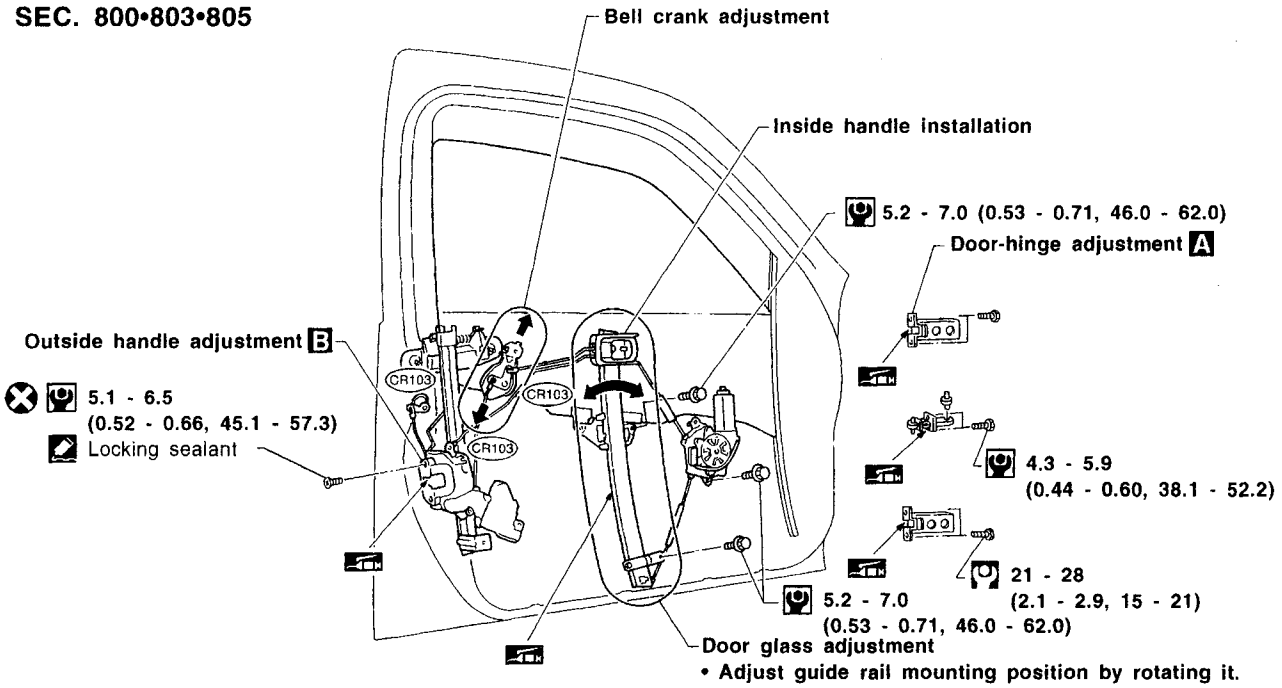

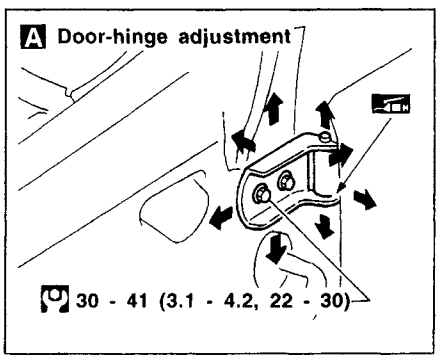

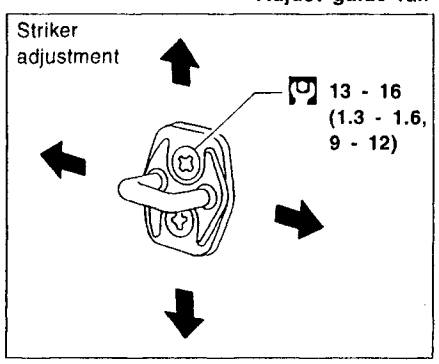

• Parts consisting the system for the 3-door hatchback are the same as for 4-door sedan and 5-door hatchback.

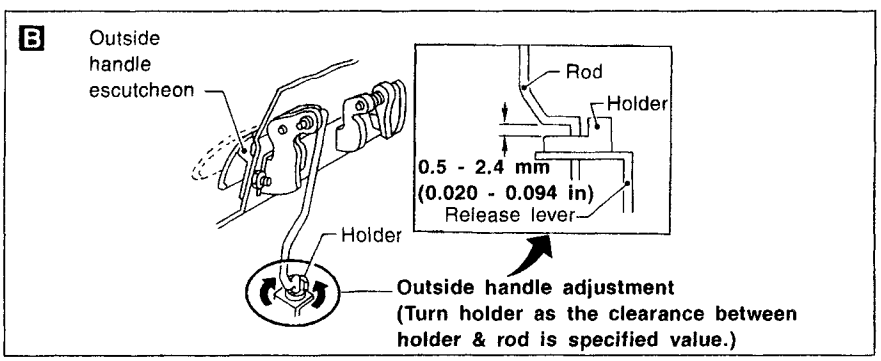

: N•m (kg-m, ft-lb)
: N•m (kg-m, in-lb)

BT

SBT044

Simpo PDF Merge and Split Unregistered Version - http://www.simpopdf.com

Rear Door

SEC. 820•823•825

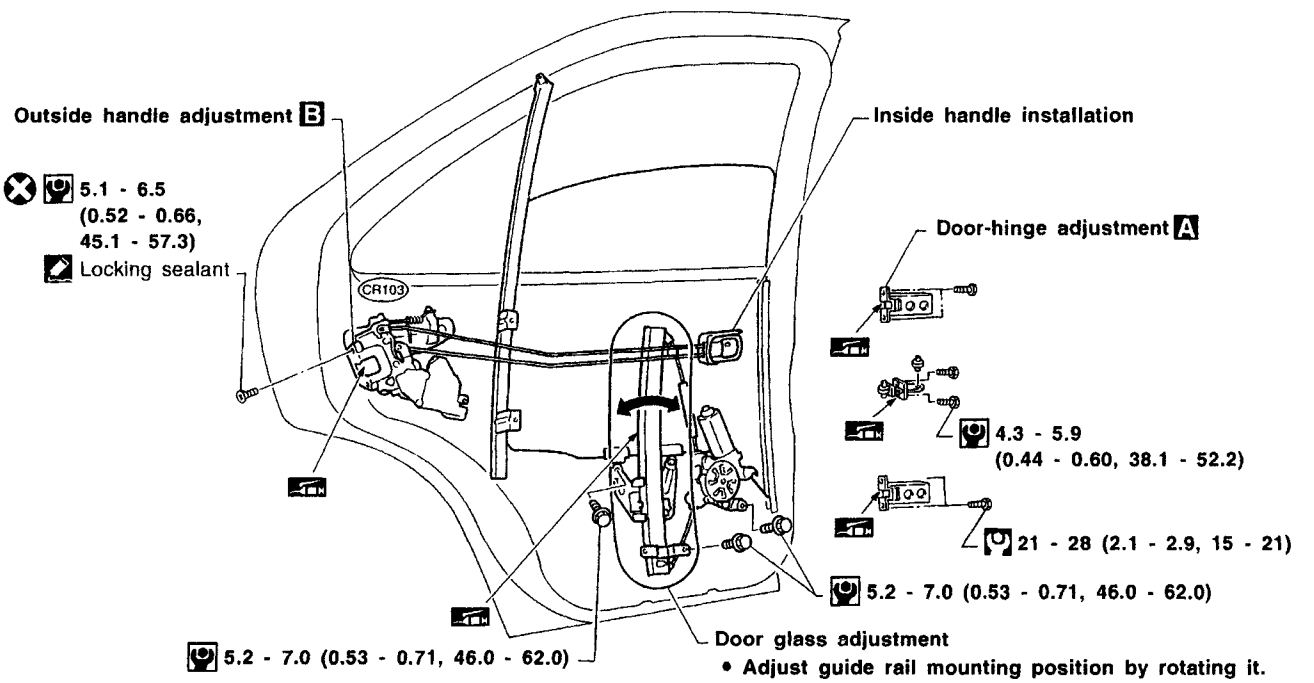

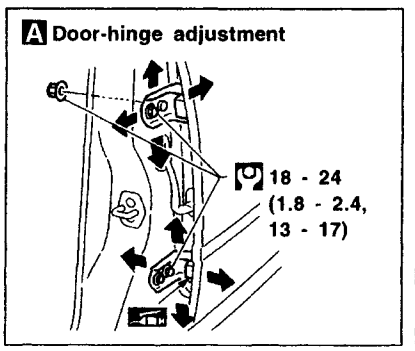

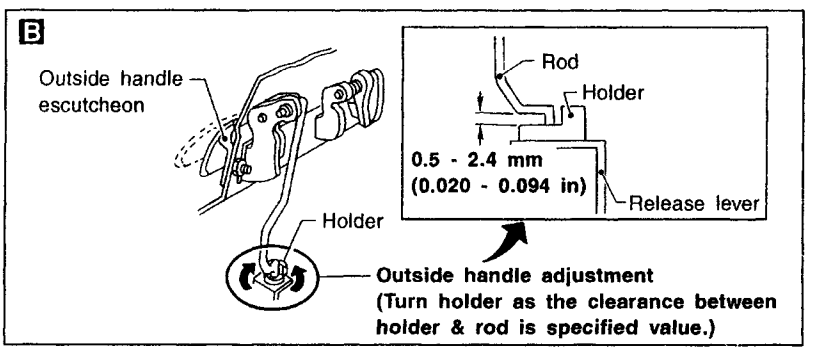

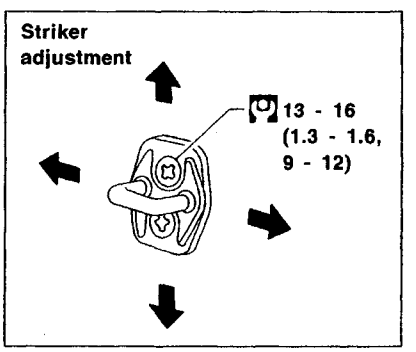

: N•m (kg-m, ft-lb)

: N•m (kg-m, in-lb)

SBT045

Simpo PDF Merge and Split Unregistered Version - http://www.simpopdf.com

CAUTION:

- **Disconnect both battery cables in advance.**
- **Disconnect air bag system line in advance.**
- **Never tamper with or force air bag lid open, as this may adversely affect air bag performance.**
- **Be careful not to scratch pad and other parts.**

REMOVAL — Instrument panel assembly

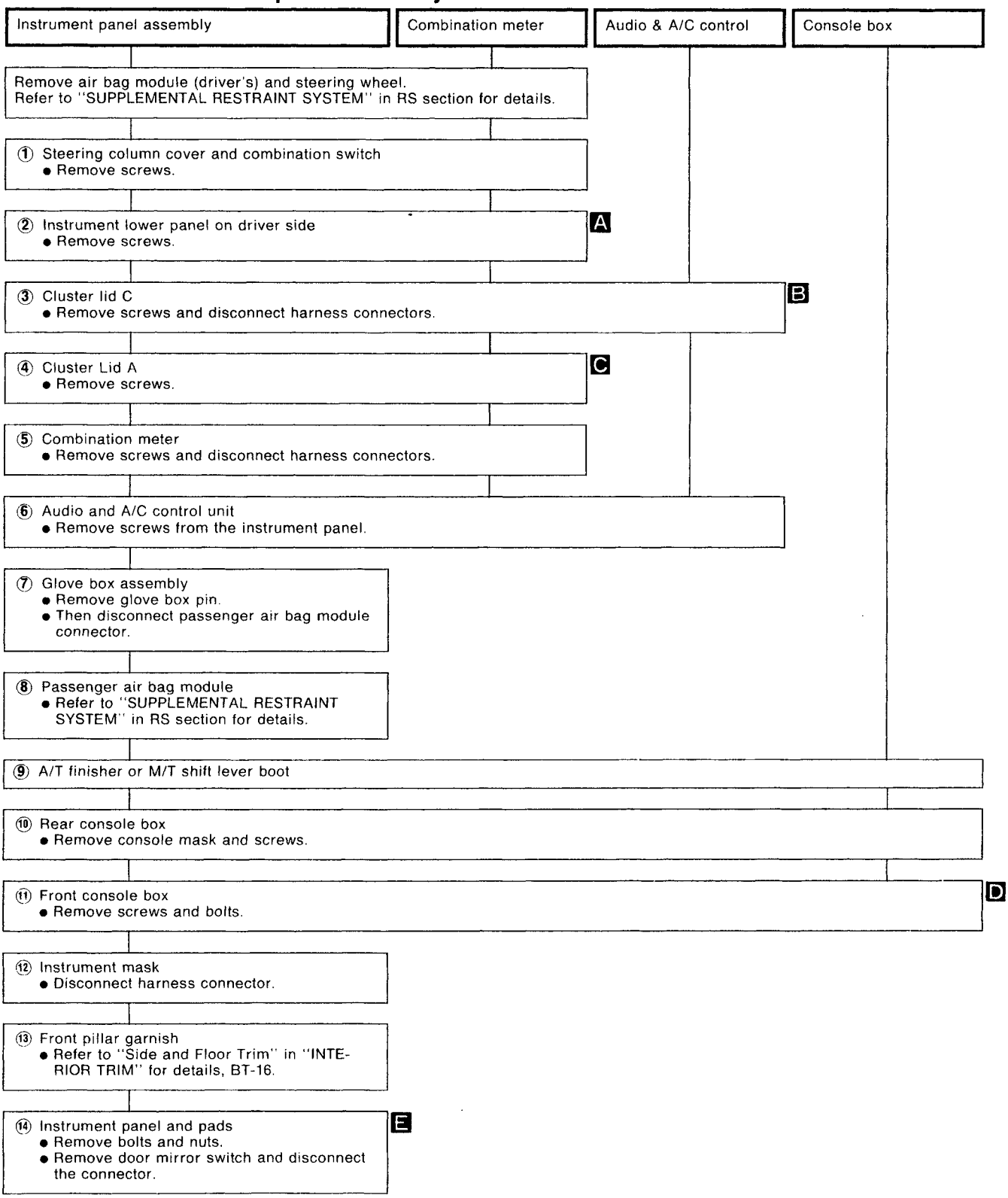

BT

Simpo PDF Merge and Split Unregistered Version - http://www.simpopdf.com

SEC. 248•251•272•487•680•685•969

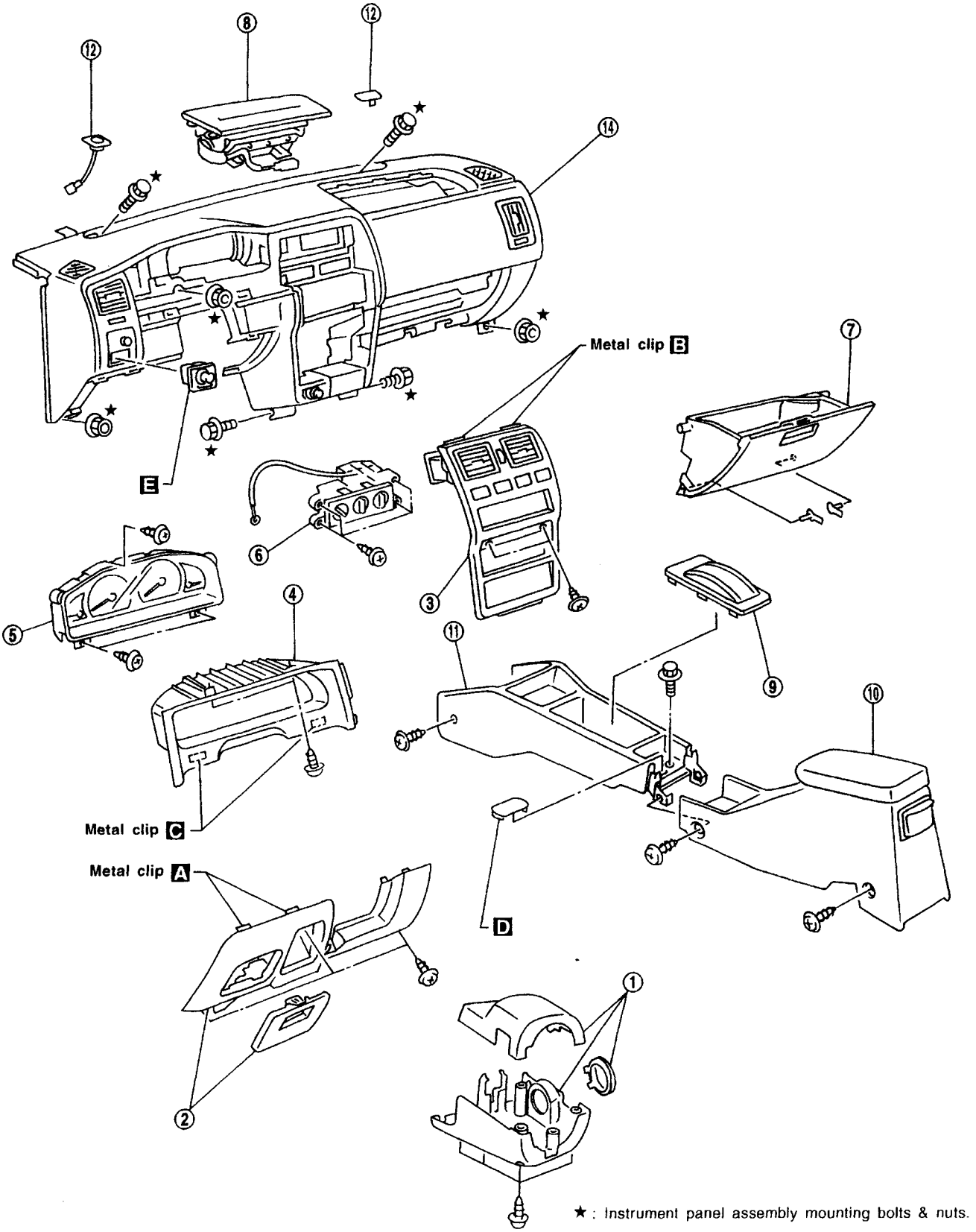

Simpo PDF Merge and Split Unregistered Version - http://www.simpopdf.com

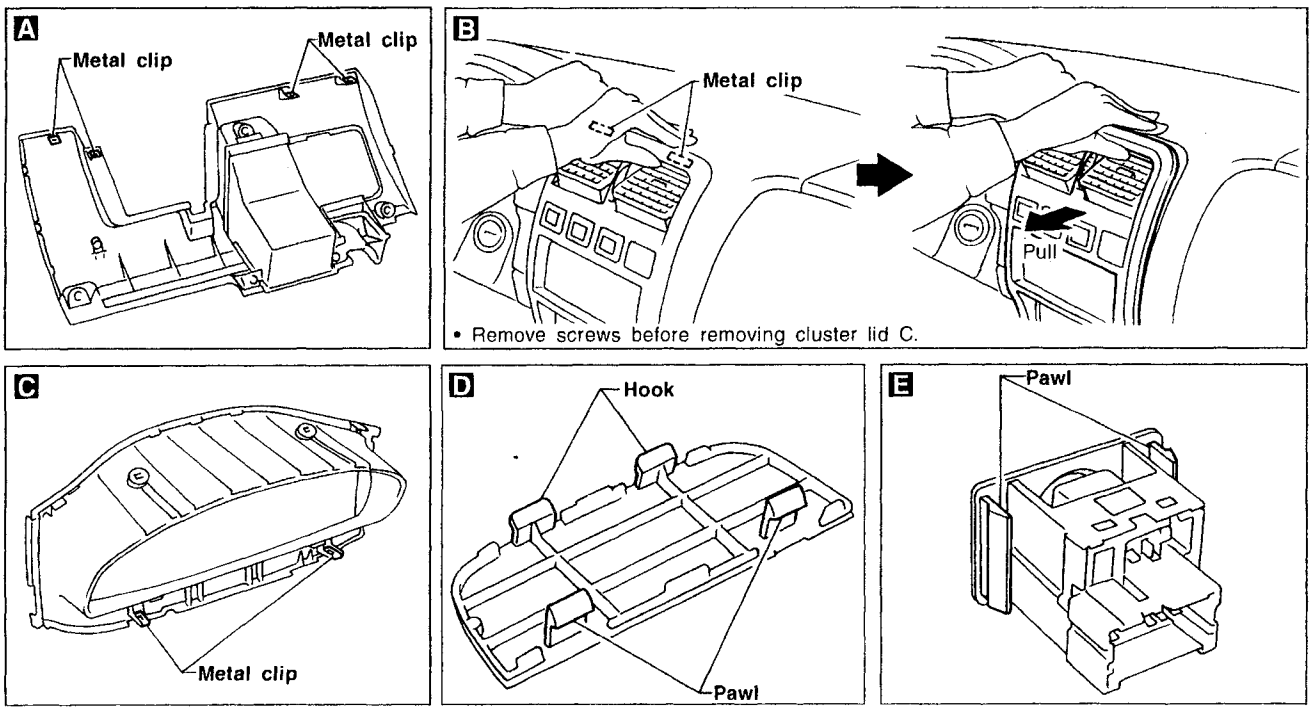

SBT047

Simpo PDF Merge and Split Unregistered Version - http://www.simpopdf.com

Side and Floor Trim

CAUTION:
Wrap the tip of flat-bladed screwdriver with a cloth when removing metal clips from garnishes.

REMOVAL — Body side trim

4-door sedan

① Remove front and rear seats. Refer to "SEAT" for details, BT-35.
② Remove front and rear seat belts. Refer to "SEAT BELTS" in RS section for details.
③ Remove front and rear kicking plates.
④ Remove dash side lower finishers.
⑤ Remove front and rear body side welts.
⑥ Remove front pillar garnishes.
⑦ Remove center pillar lower garnishes.
⑧ Remove center pillar upper garnishes.
⑨ Remove rear pillar garnishes.
⑩ Remove rear parcel shelf finisher.
⑪ Remove welt.
⑫ Remove seatback finisher.

SEC. 678•749•769•799

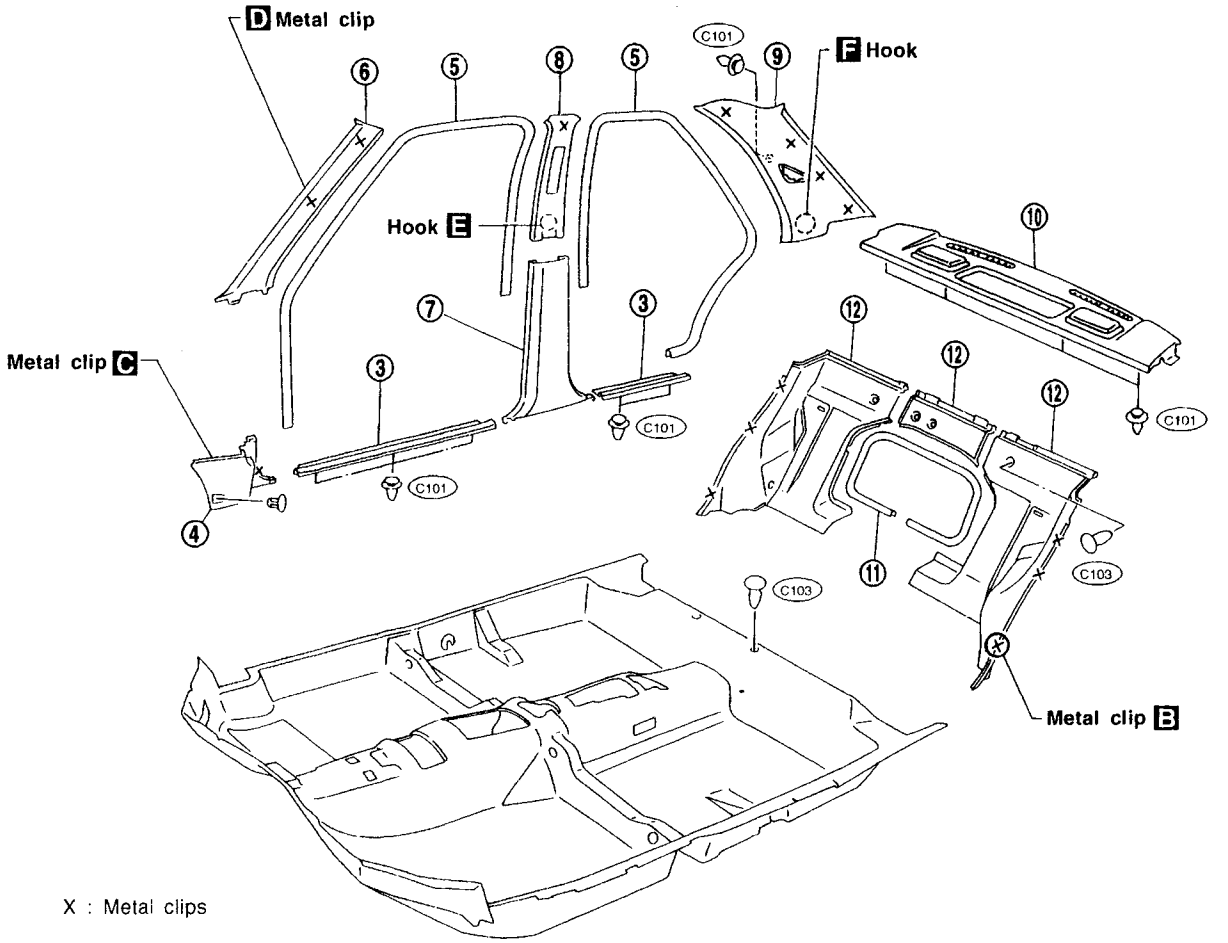

SBT048

Simpo PDF Merge and Split Unregistered Version - http://www.simpopdf.com

Side and Floor Trim (Cont'd)

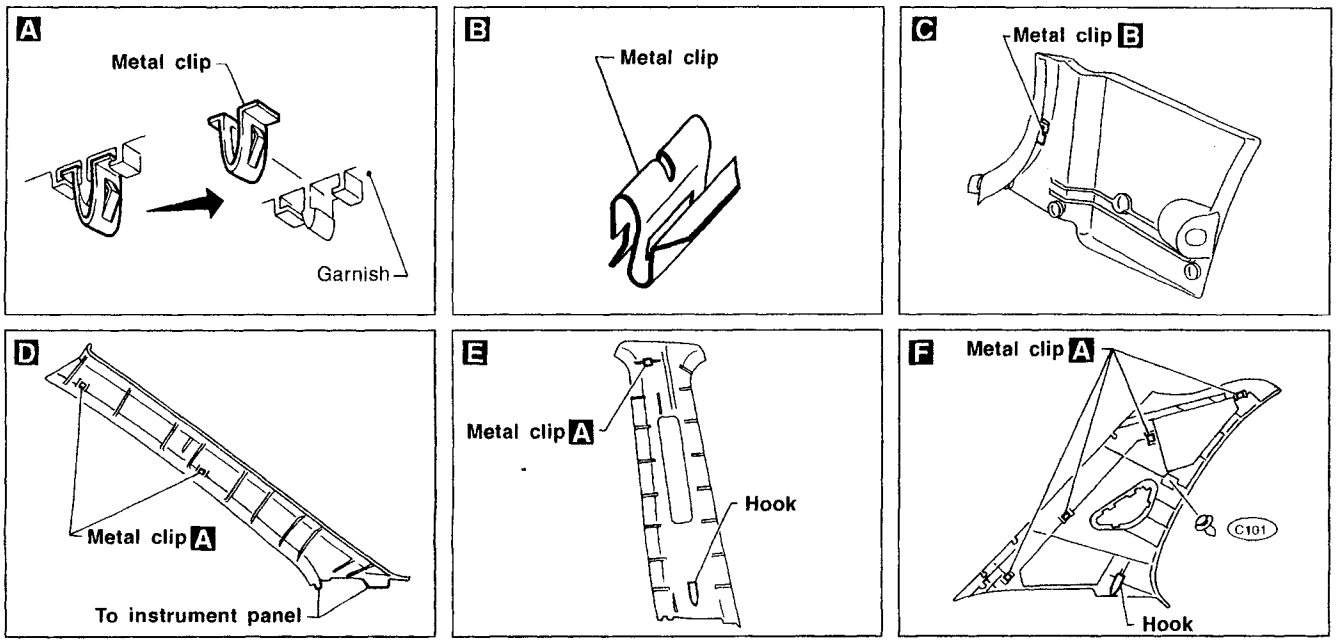

SBT049

Simpo PDF Merge and Split Unregistered Version - http://www.simpopdf.com

Side and Floor Trim (Cont'd)

REMOVAL — Body side trim

5-door hatchback

- Remove tonneau board before removing body side trim.

① Remove front and rear seats. Refer to "SEAT" for details, BT-35.
② Remove front and rear seat belts. Refer to "SEAT BELTS" in RS section for details.
③ Remove front and rear kicking plates.
④ Remove dash side lower finishers.
⑤ Remove front and rear body side welts.
⑥ Remove front pillar garnishes.
⑦ Remove center pillar lower garnishes.
⑧ Remove center pillar upper garnishes.
⑨ Remove rear parcel shelf side finishers.
⑩ Remove rear pillar finishers.
⑪ Remove rear wheelhouse finishers.
⑫ Remove luggage room rear plate.
⑬ Remove luggage room rear finisher.
⑭ Remove luggage room side lower finishers.

SEC. 678•749•769•799

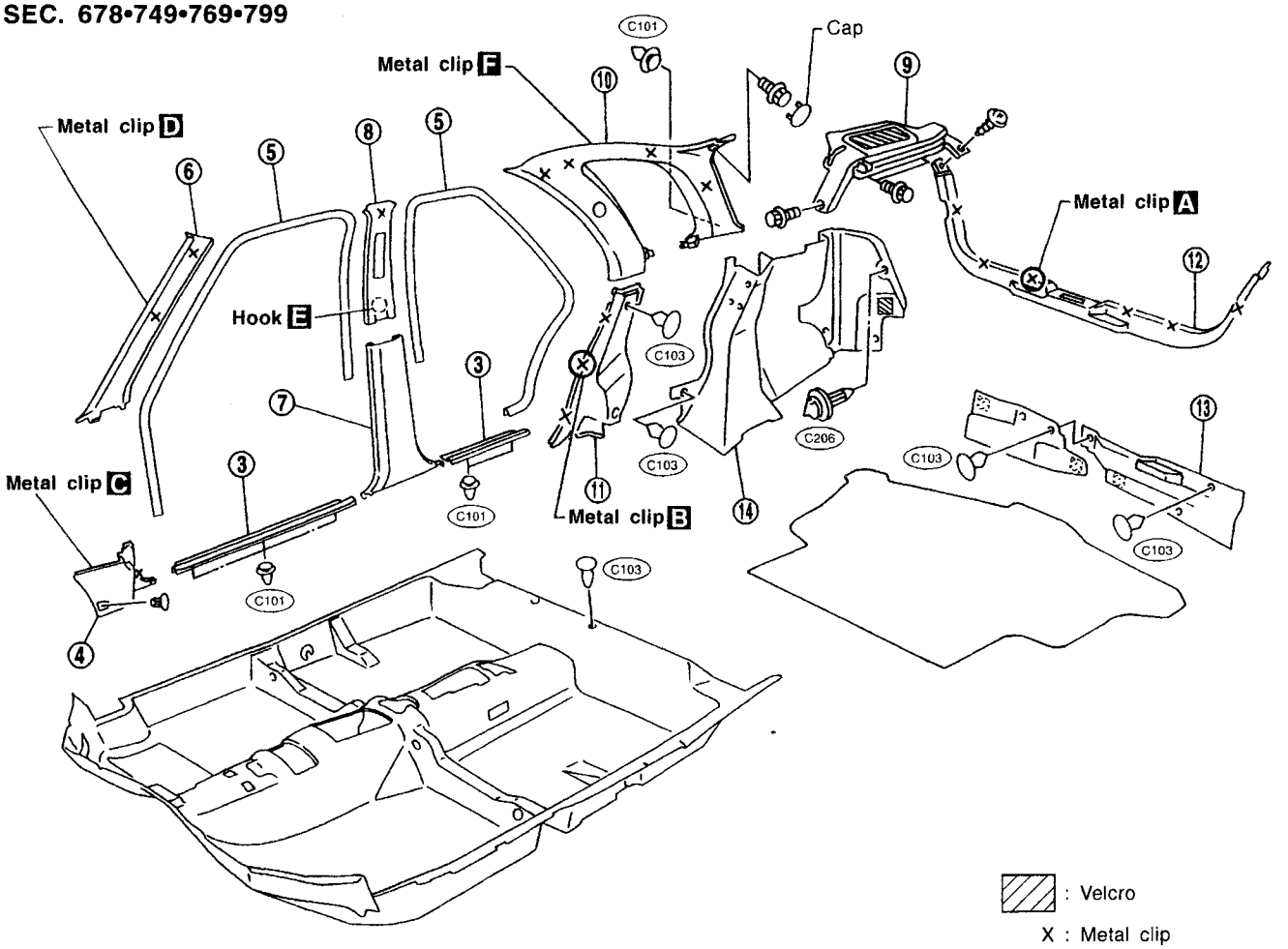

SBT050

Simpo PDF Merge and Split Unregistered Version - http://www.simpopdf.com

Side and Floor Trim (Cont'd)

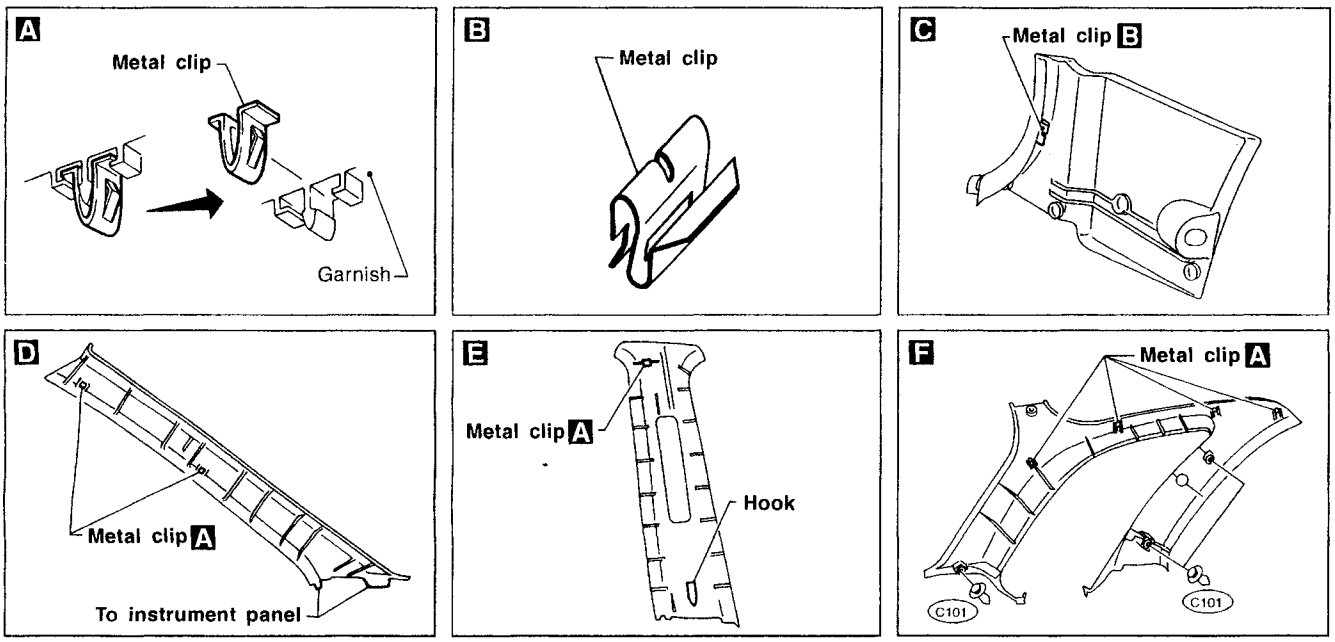

SBT051

BT

Simpo PDF Merge and Split Unregistered Version - http://www.simpopdf.com

Side and Floor Trim (Cont'd)

REMOVAL — Body side trim

3-door hatchback

- Remove tonneau board before removing body side trim.

① Remove front and rear seats. Refer to "SEAT" for details, BT-35.
② Remove front and rear seat belts. Refer to "SEAT BELTS" in RS section for details.
③ Remove kicking plate.
④ Remove dash side lower finishers.
⑤ Remove body side welts.
⑥ Remove front pillar garnishes.
⑦ Remove rear parcel shelf side finishers.
⑧ Remove rear side finishers.
⑨ Remove rear pillar garnishes.
⑩ Remove luggage room rear plate.
⑪ Remove luggage room rear finisher.
⑫ Remove luggage room rear side lower finishers.

SEC. 678•749•769•799

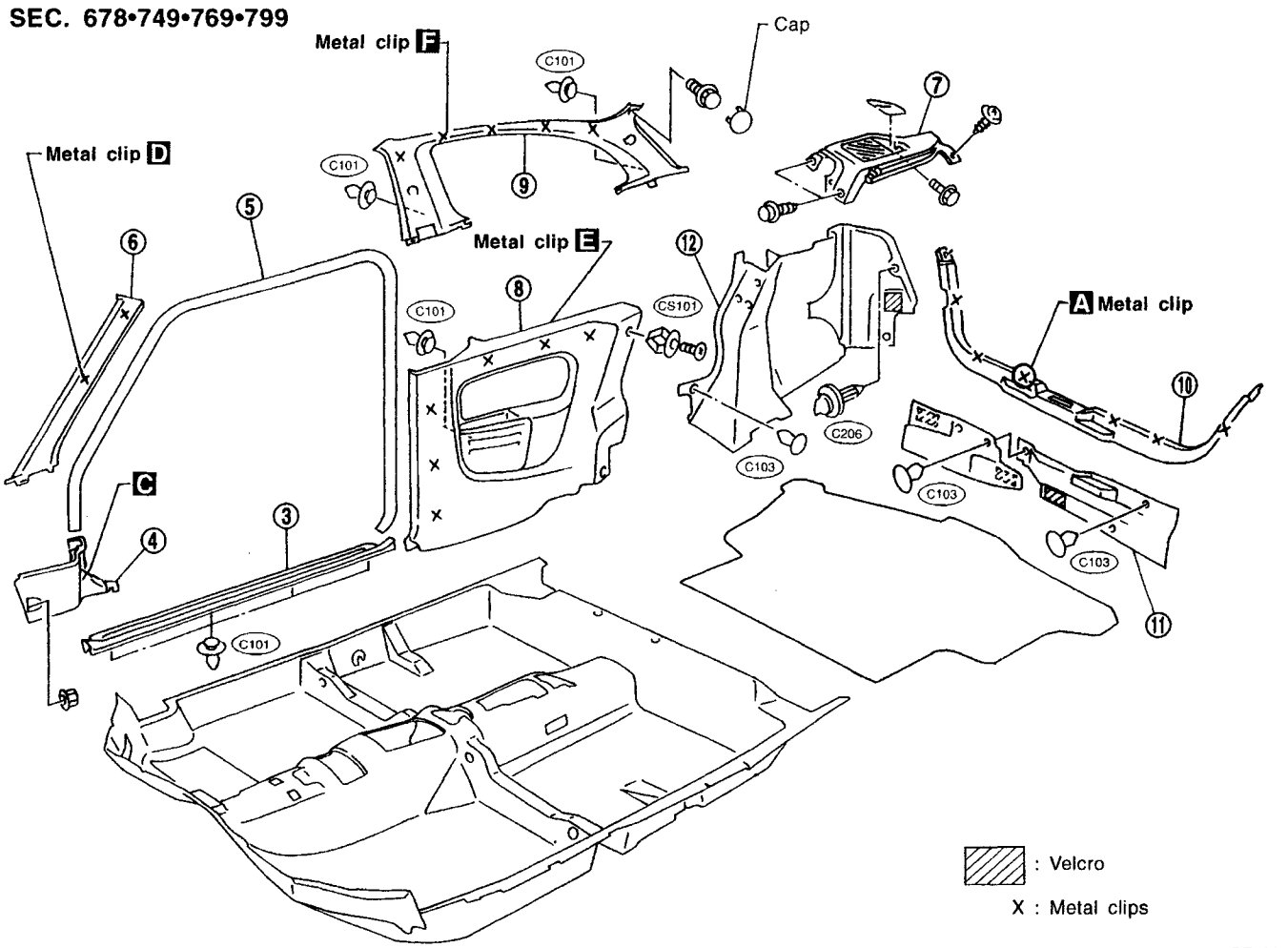

SBT052

Simpo PDF Merge and Split Unregistered Version - http://www.simpopdf.com

Side and Floor Trim (Cont'd)

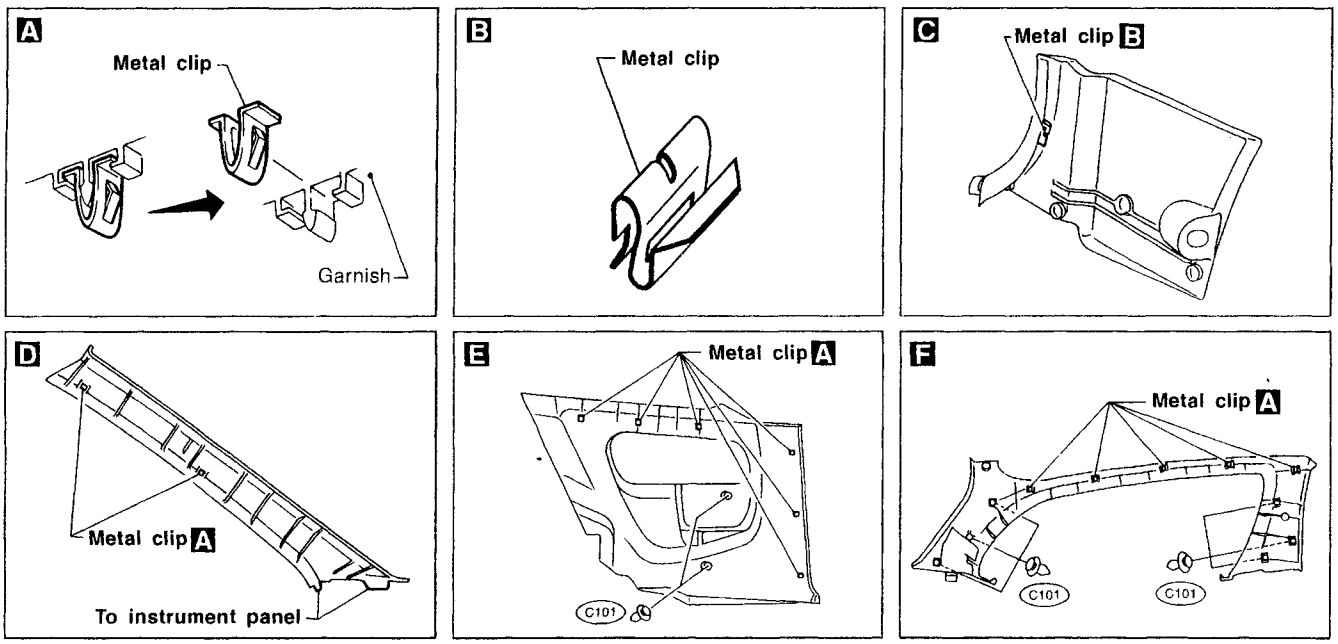

SBT053

BT

Simpo PDF Merge and Split Unregistered Version - http://www.simpopdf.com

Door Trim

REMOVAL — Door trim

3-door hatchback

① Remove inside handle escutcheon.
② Remove arm rest finisher from power window switch assembly and disconnect the connector.
③ Remove bolts, screws and clips (C103) securing door finisher.
④ Lift out door finisher.

SEC. 809

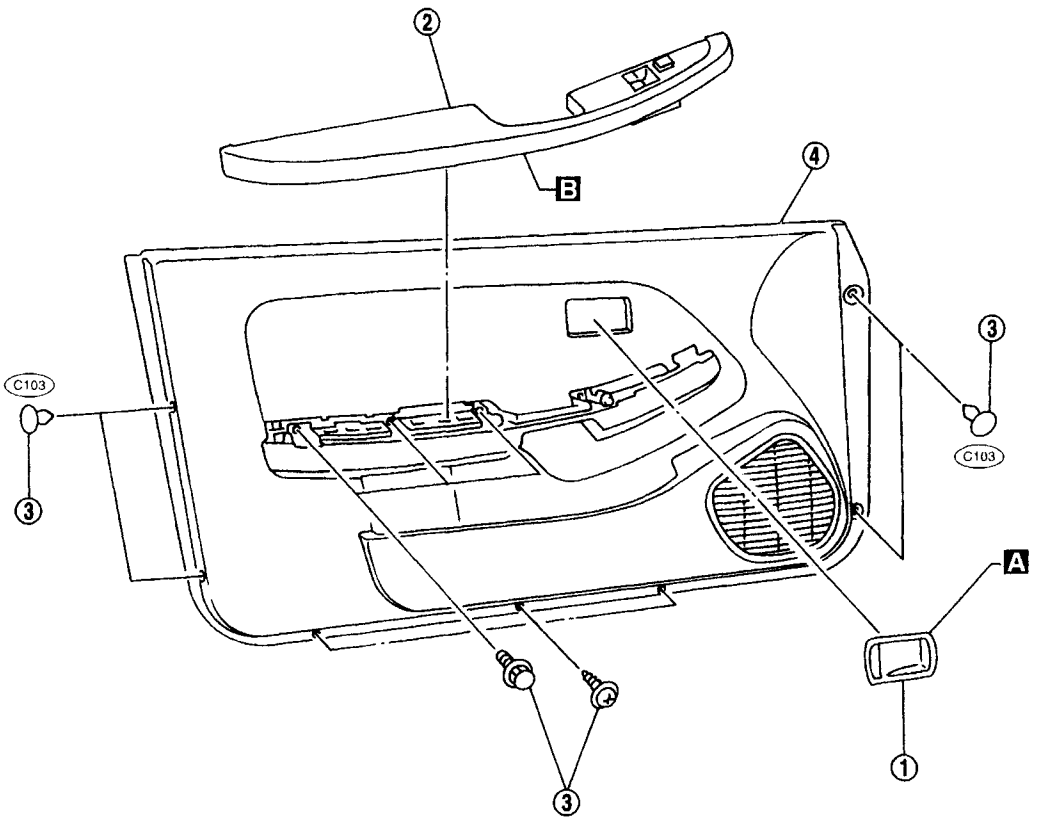

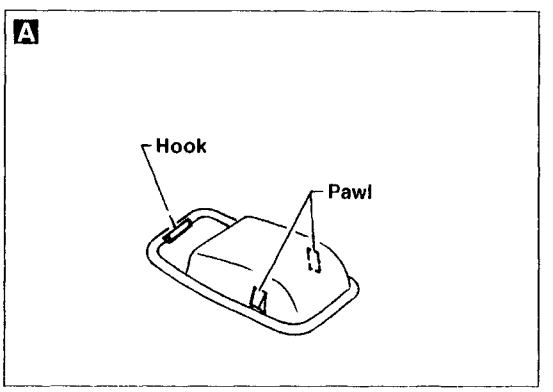

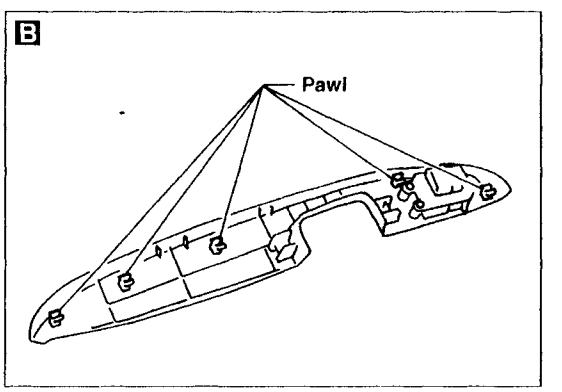

SBT054

Simpo PDF Merge and Split Unregistered Version - http://www.simpopdf.com

Door Trim (Cont'd)

REMOVAL — Door trim

4-door sedan and 5-door hatchback

① Remove inside handle escutcheon.
② Remove arm rest finisher from power window switch assembly and disconnect the connector.
③ Remove screw securing pull handle and remove pull handle.
④ Remove window regulator handle (Manual window models).
⑤ Remove bolts, screws and clips (C103) securing door finisher.
⑥ Lift out door finisher.

SEC. 251•267•809•828

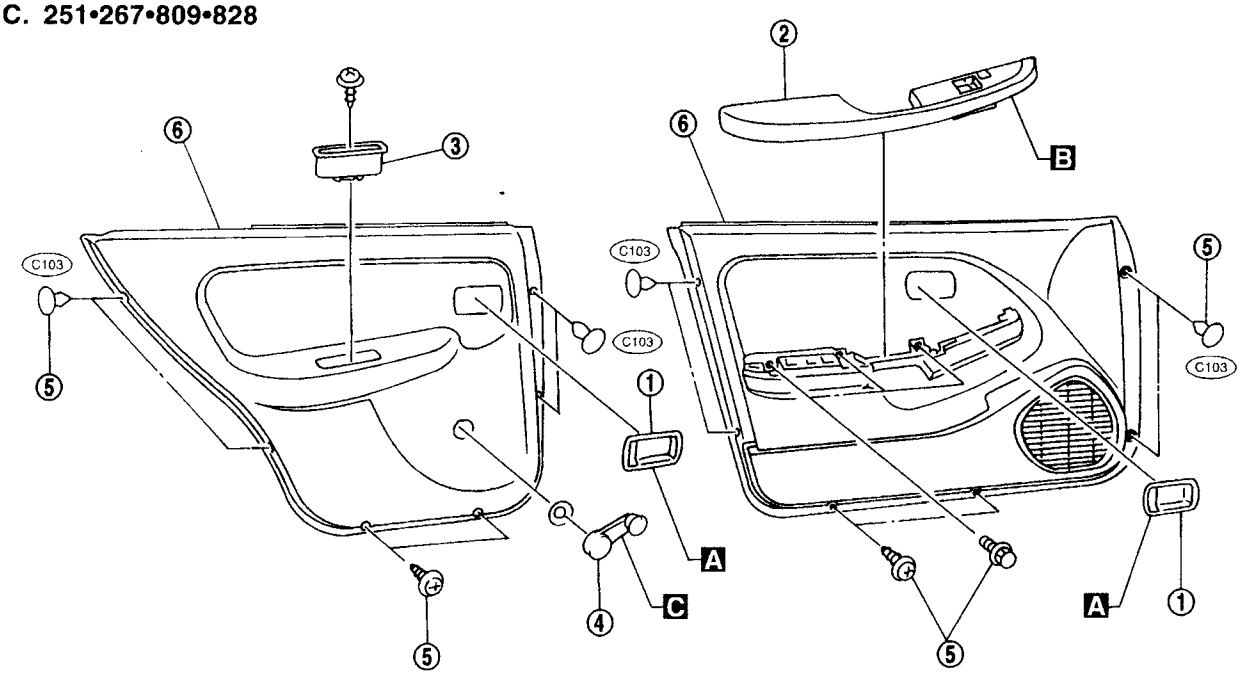

A

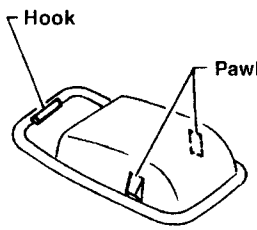

B

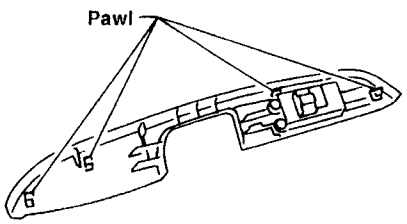

C Manual window regulator handle

Removal

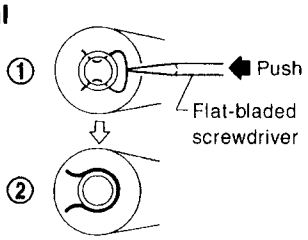

Squeeze the regulator handle clip in place with a screwdriver and remove the regulator handle from the regulator shaft.
Set the regulator handle clip as shown in figure ①.

Installation

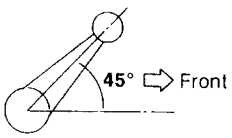

Push the regulator handle to install it onto the regulator shaft.
Install the regulator handle in place as shown in the figure with the window completely closed.

SBT055

BT

Simpo PDF Merge and Split Unregistered Version - http://www.simpopdf.com

Roof Trim

REMOVAL — Headlining

4-door sedan

① Remove front and rear seats. Refer to "SEAT" for details, BT-35.
② Remove front and rear seat belts. Refer to "SEAT BELTS" in RS section for details.
③ Remove body side trim. Refer to "Side and Floor Trim" for details, BT-16.
④ Remove sunroof switch. (Models equipped with sunroof)
⑤ Remove sunroof welt. (Models equipped with sunroof)
⑥ Remove inside mirror assembly.
⑦ Remove sun visors.
⑧ Remove interior lamp assembly.
⑨ Remove assist grips.
⑩ Remove clips (C103) securing headlining.
⑪ Remove headlining.

SEC. 264•738•963•964

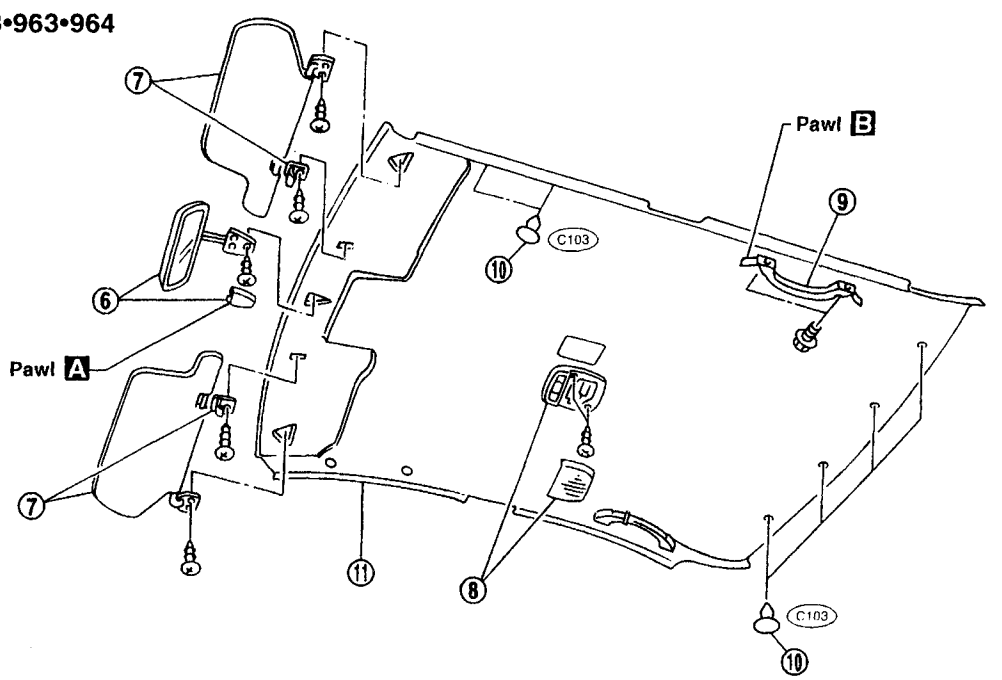

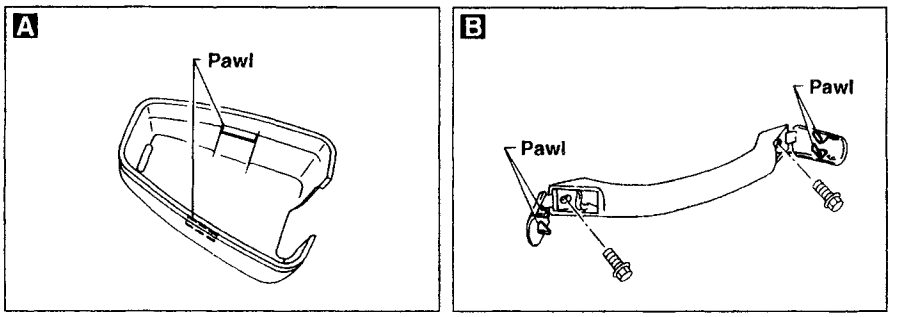

SBT056

Simpo PDF Merge and Split Unregistered Version - http://www.simpopdf.com

Roof Trim (Cont'd)

REMOVAL — Headlining

3-door and 5-door hatchback

① Remove front and rear seats. Refer to "SEAT" for details, BT-35.
② Remove front and rear seat belts. Refer to "SEAT BELTS" in RS section for details.
③ Remove body side trim. Refer to "Side and Floor Trim" for details, BT-16.
④ Remove sunroof switch. (Models equipped with sunroof)
⑤ Remove sunroof welt. (Models equipped with sunroof)
⑥ Remove inside mirror assembly.
⑦ Remove sun visors.
⑧ Remove interior lamp assembly.
⑨ Remove assist grips.
⑩ Remove clips (C103) securing headlining.
⑪ Remove roof rear garnish.
⑫ Remove headlining.

SEC. 264•738•963•964

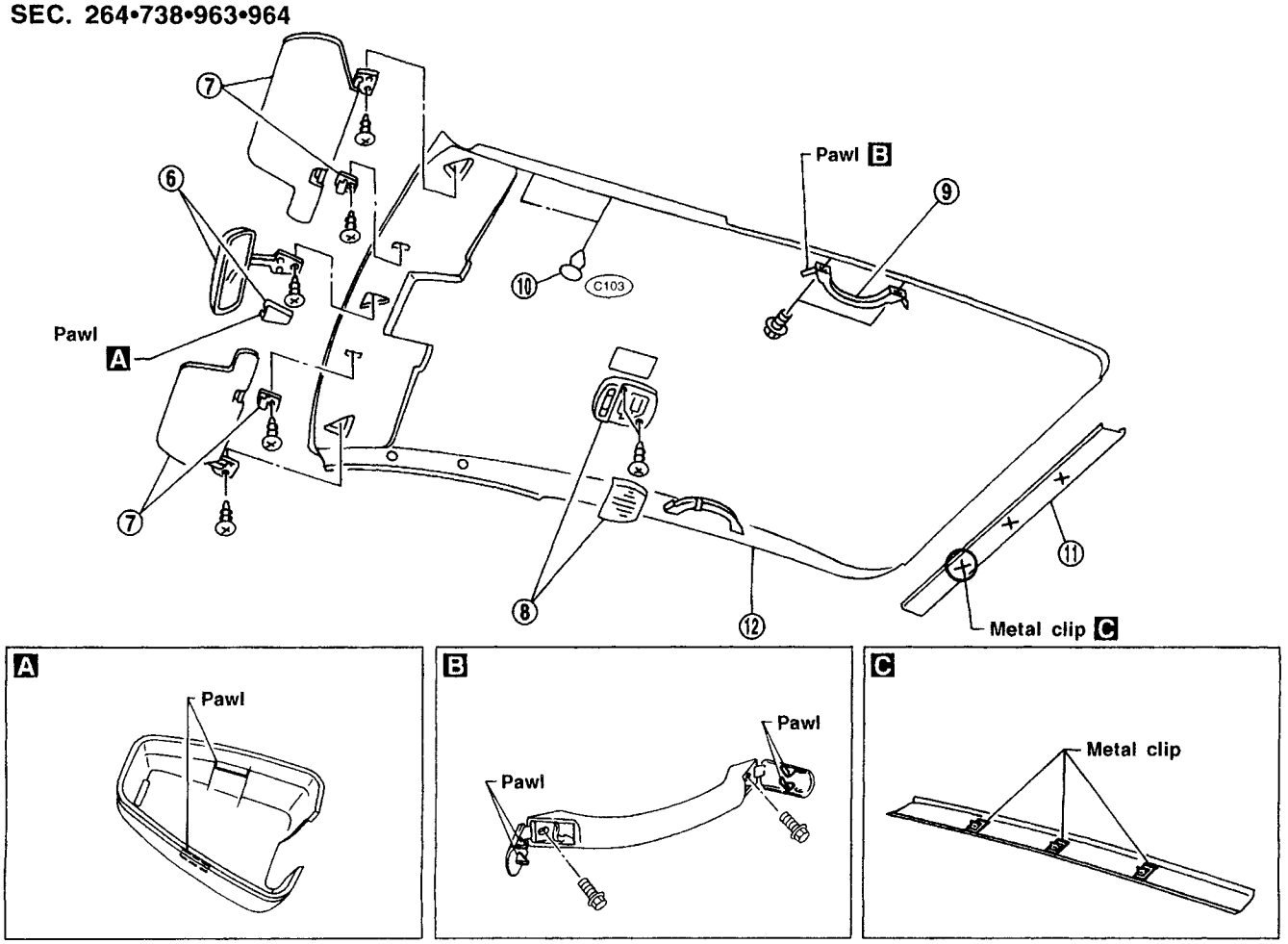

SBT057

BT

Simpo PDF Merge and Split Unregistered Version - http://www.simpopdf.com

Trunk Room Trim

SEC. 849

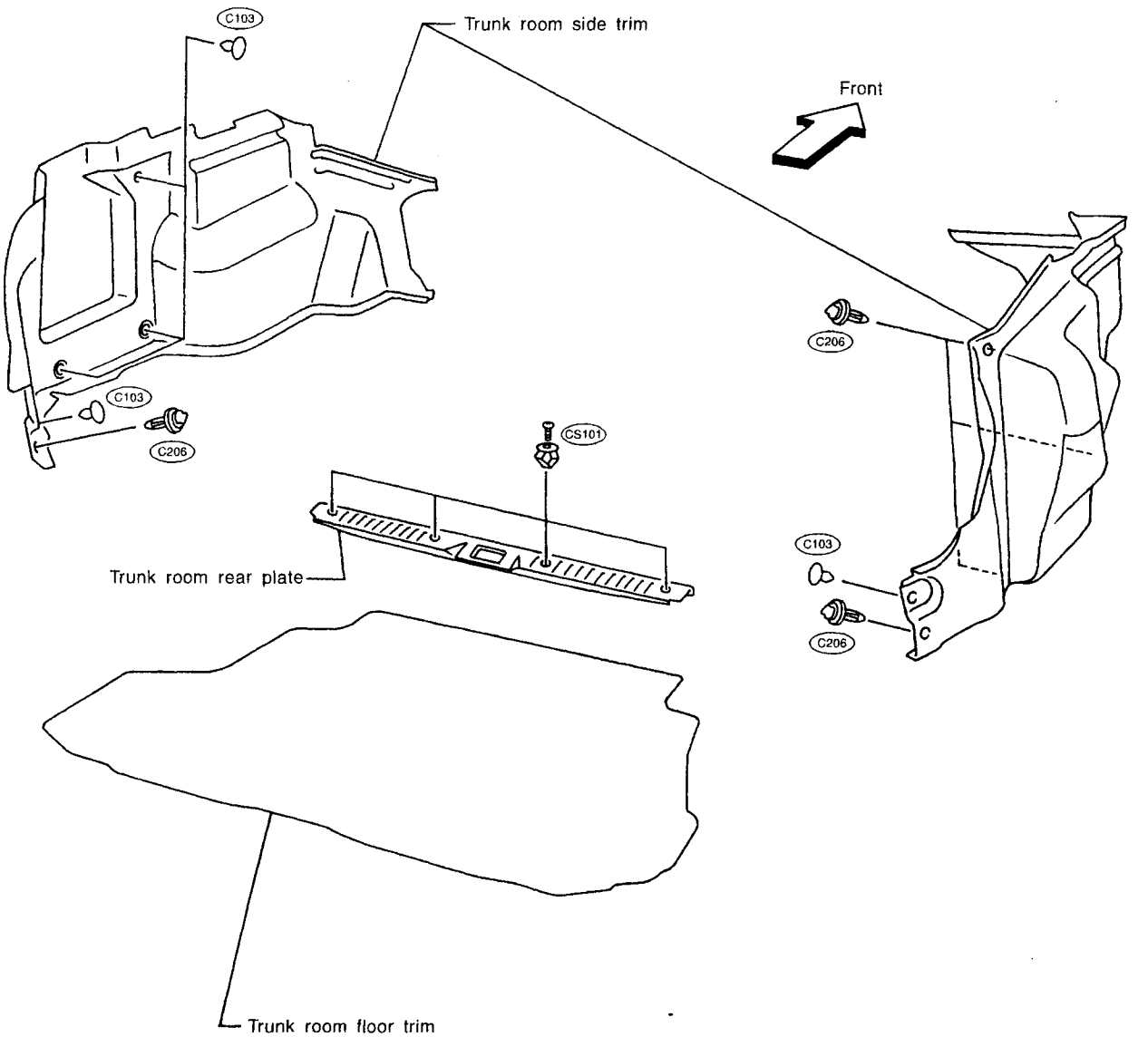

SBT058

Simpo PDF Merge and Split Unregistered Version - http://www.simpopdf.com

Back Door Trim

REMOVAL — Back door trim

① Remove back door side finisher.
② Remove handle escutcheon.
③ Remove back door finisher.
④ Remove high-mounted stop lamp.

SEC. 909

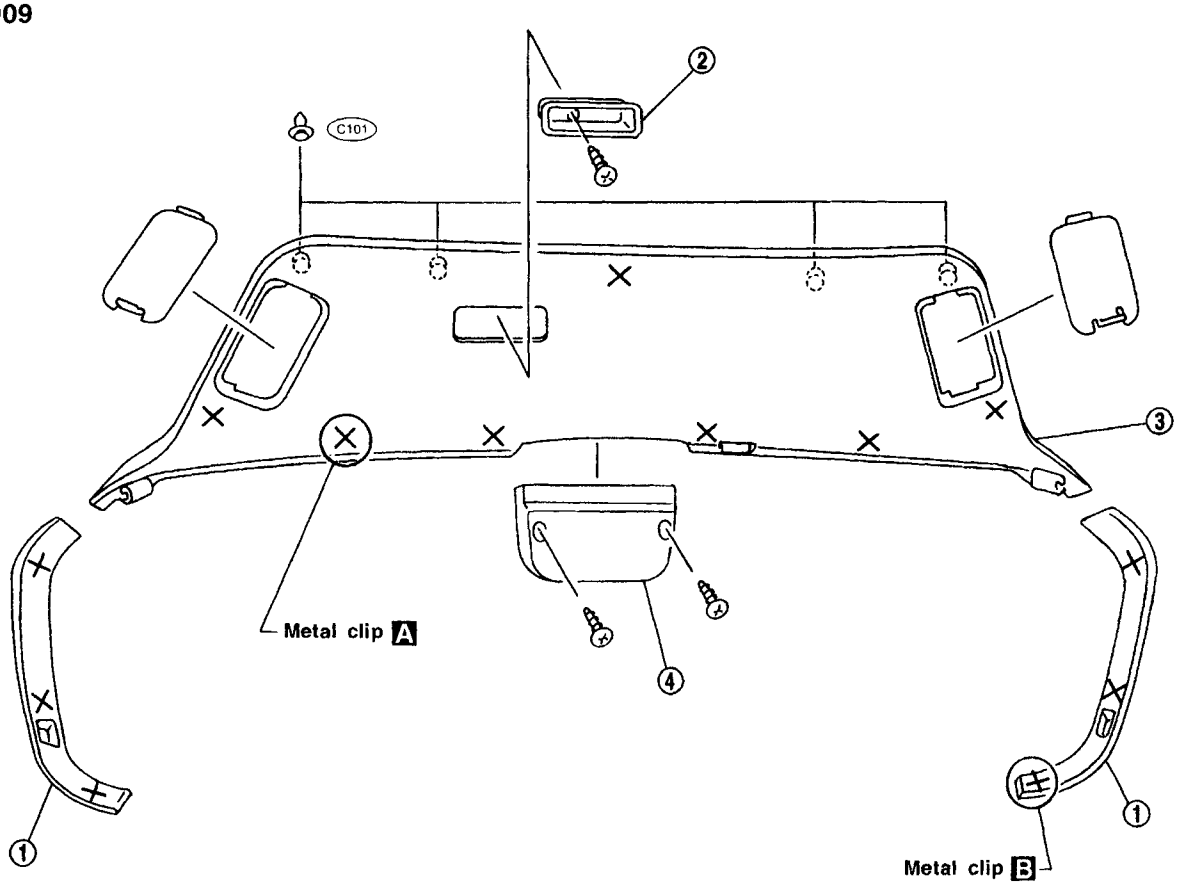

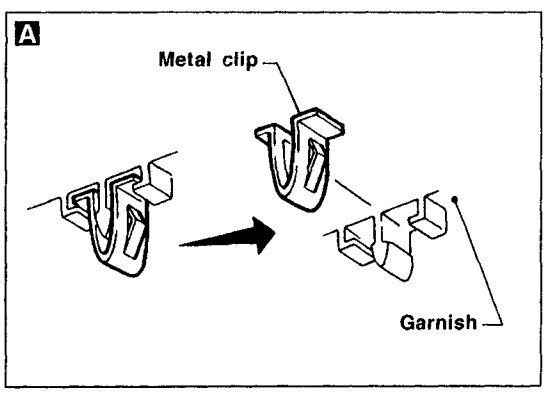

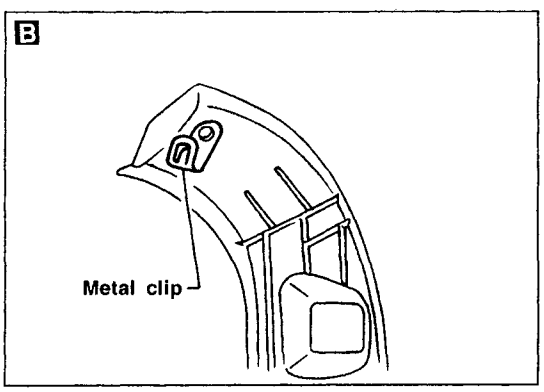

SBT059

BT

Simpo PDF Merge and Split Unregistered Version - http://www.simpopdf.com

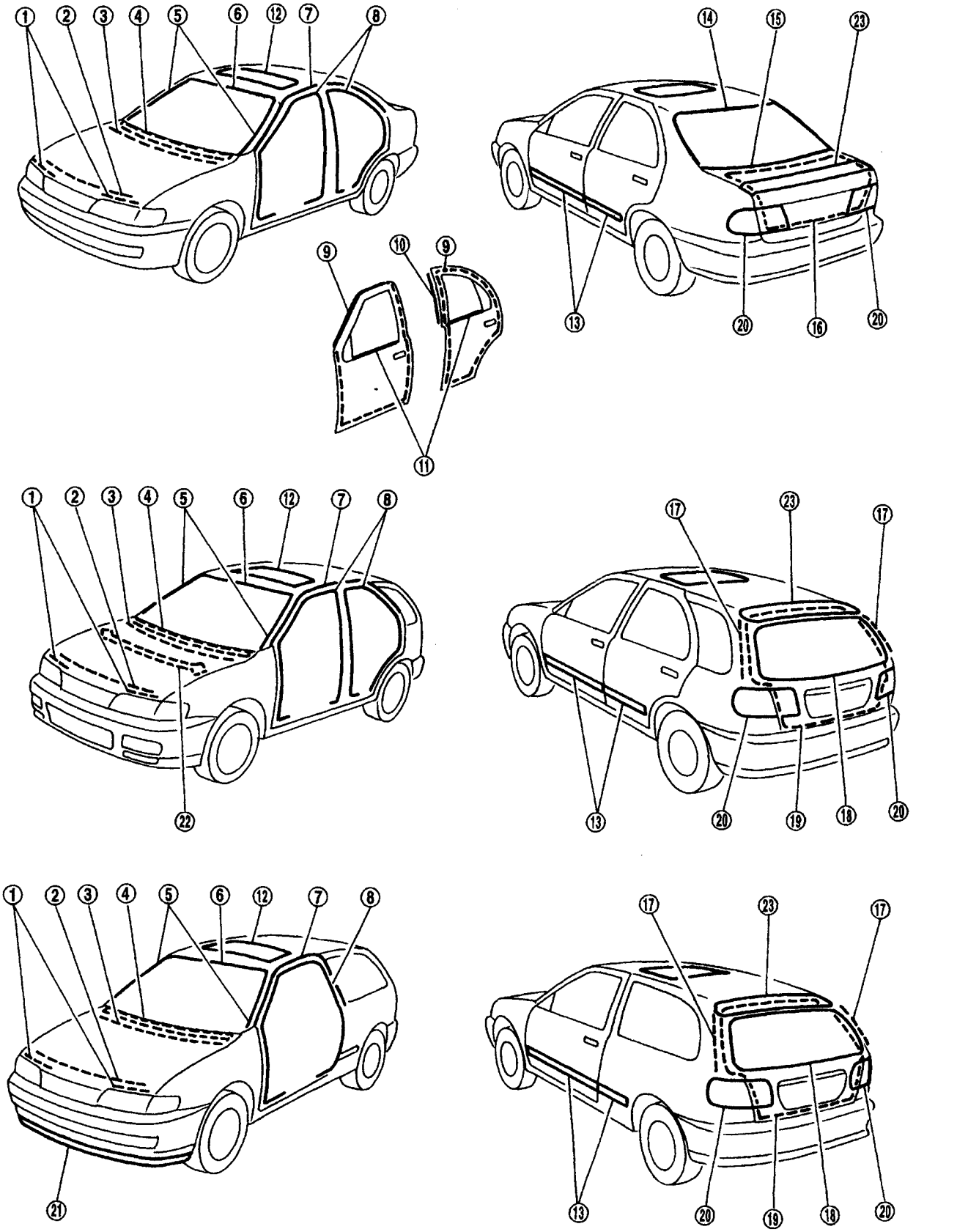

SBT060

Simpo PDF Merge and Split Unregistered Version - http://www.simpopdf.com

① ② Hood front sealing rubber

SEC. 650

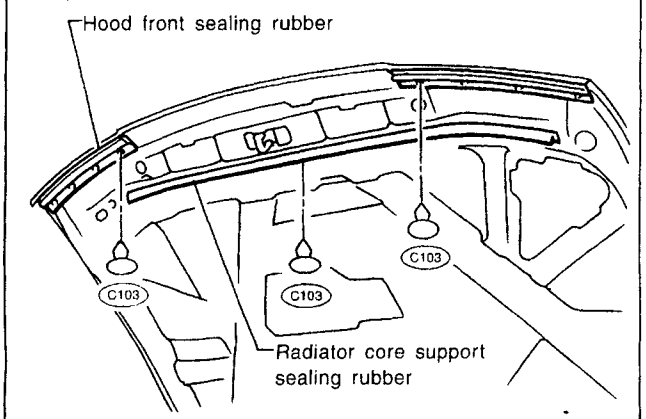

SBT061

③ ④ Cowl top seal and cowl top grille

SEC. 660

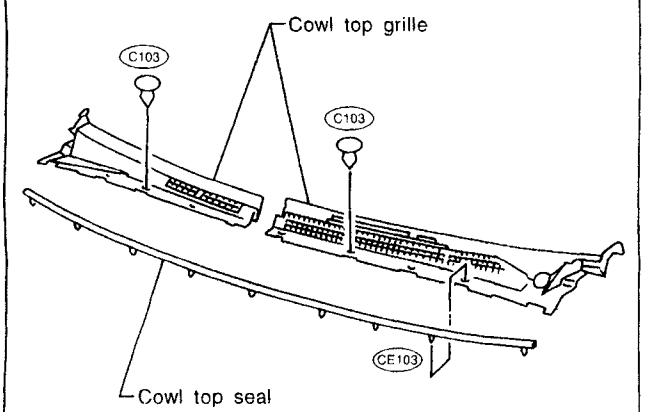

SBT062

⑤ Windshield side molding

Mounted with screws.

⑥ Windshield upper molding

SEC. 720

1. Cut off sealant at glass end.
2. Clean the side on which panel was mounted.
3. Set molding fastener and apply primer to body panel, and apply sealant to body.

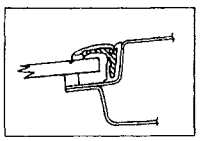

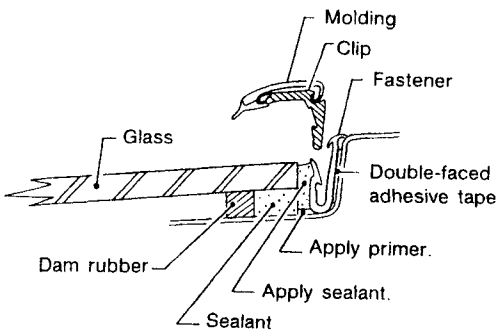

4. Install molding by aligning the molding mark located on center with vehicle center. Be sure to install tightly so that there is no gap around the corner.

SBF342H

⑦ Drip weatherstrip

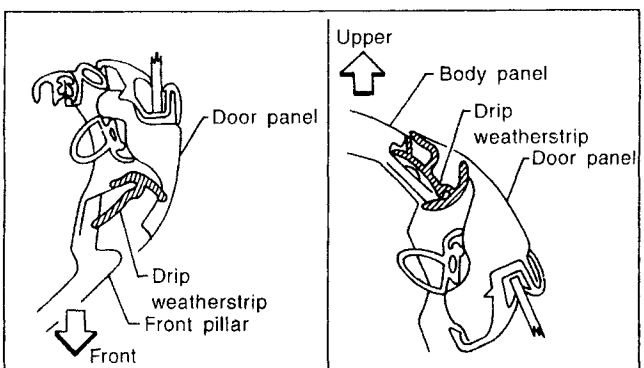

SEC. 720

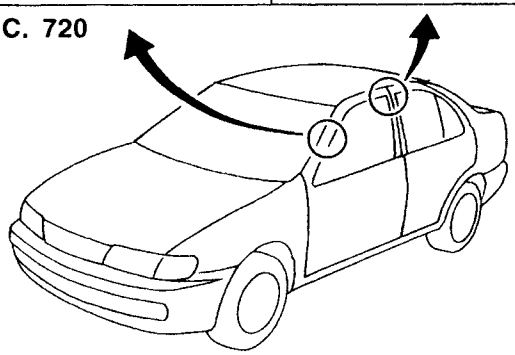

SBT063

BT

Simpo PDF Merge and Split Unregistered Version - http://www.simpopdf.com

⑧ Body side welt

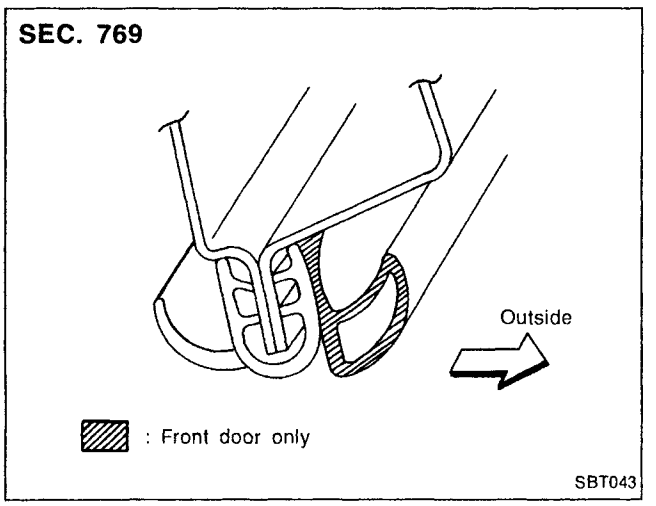

⑨ Door weatherstrip

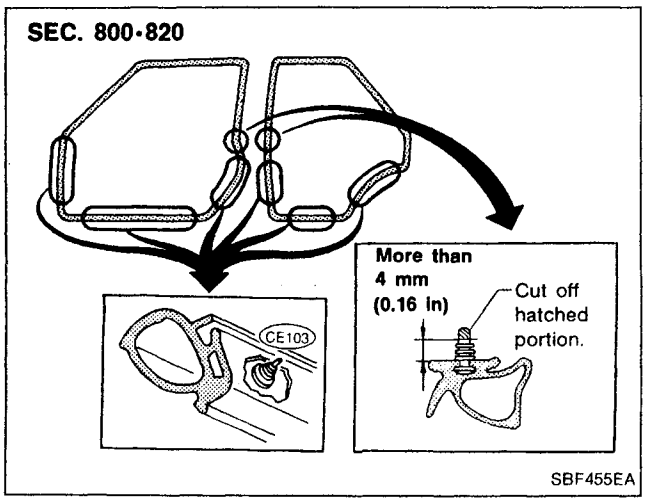

⑩ Front door parting seal

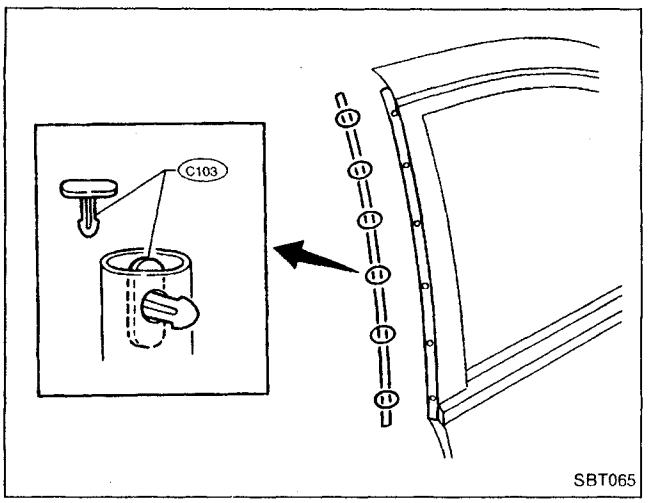

⑪ Door outside molding

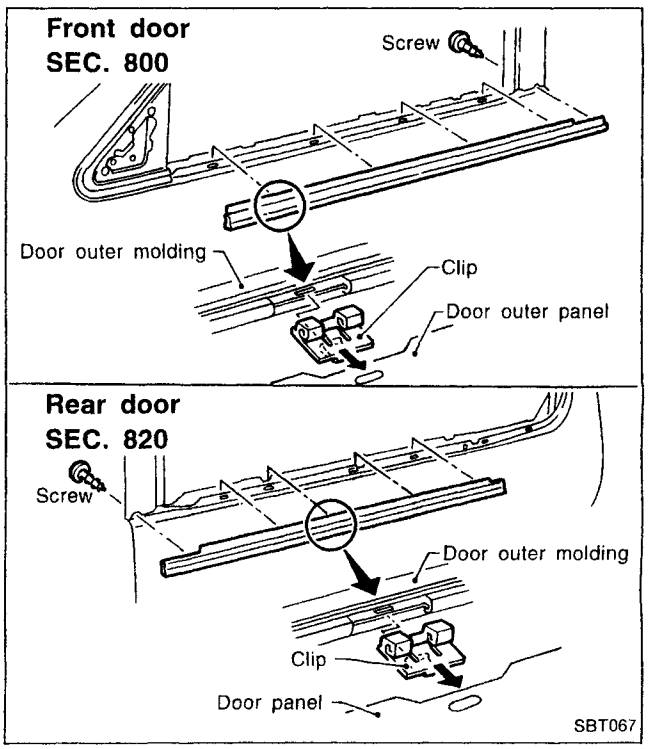

⑫ Sunroof lid weatherstrip

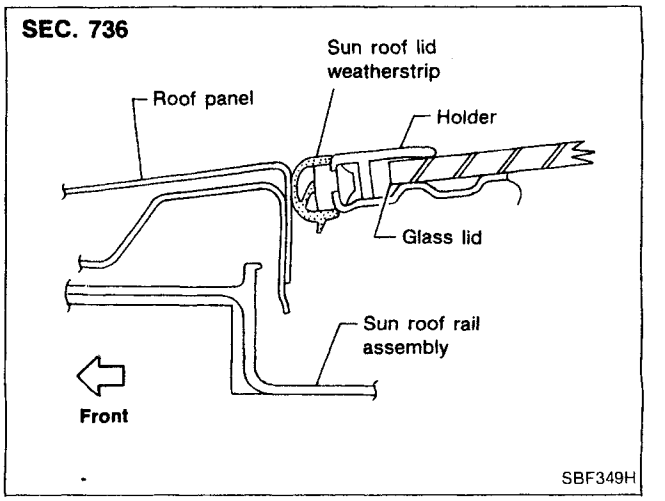

Simpo PDF Merge and Split Unregistered Version - http://www.simpopdf.com

⑬ Side guard molding

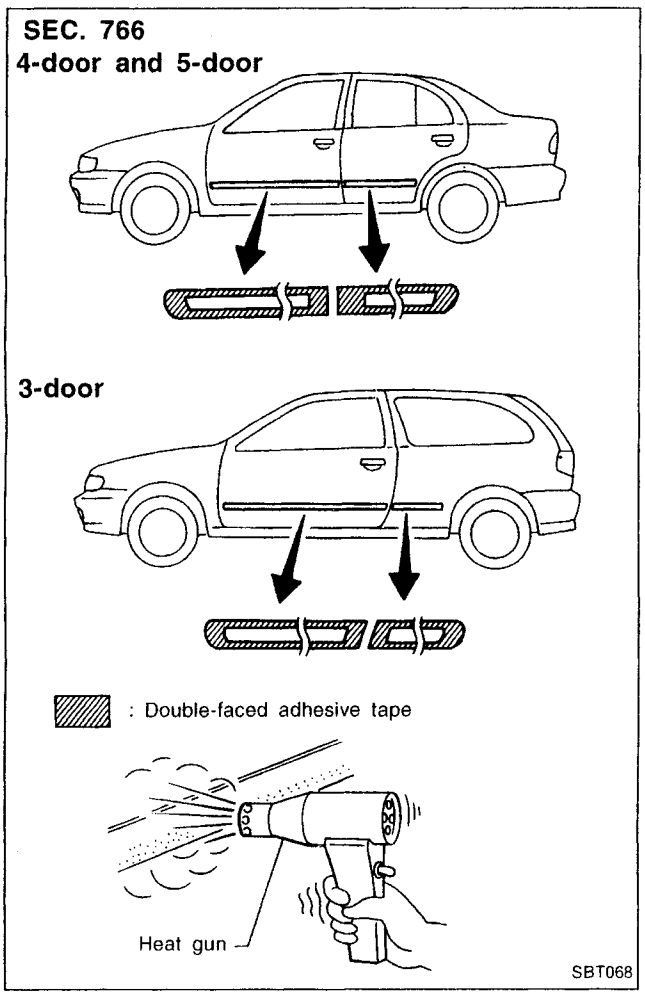

- **With a vehicle coated with Hard Clear Coat, use double-faced 3M adhesive tape Product No. 4210 or equivalent, after priming with 3M primer Product No. N-200 or C-100 or equivalent.**

⑭ Rear window upper molding and side molding

Basically the same as windshield upper molding.
Refer to ⑥ Windshield upper molding.

⑮ Rear window lower molding

Mounted with screws.

⑯ Trunk lid weatherstrip

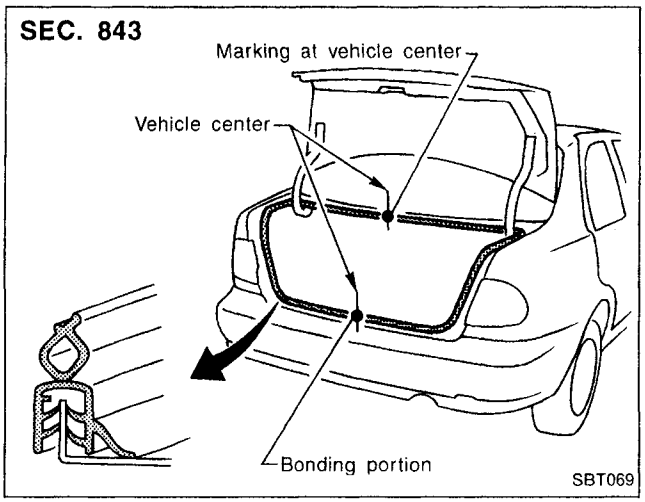

⑰ Back door side sealing rubber

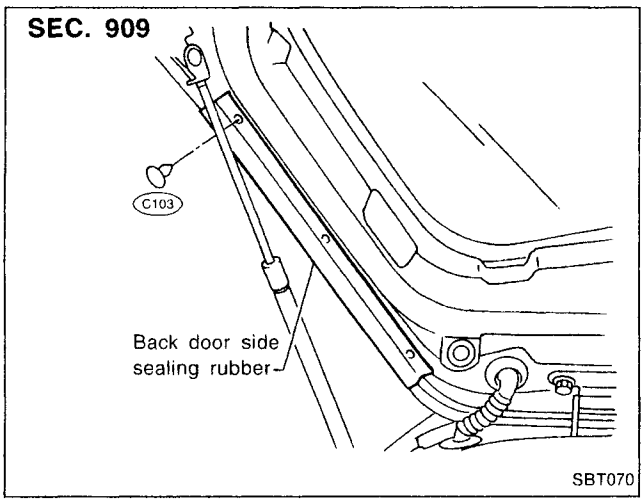

⑱ Back door window molding

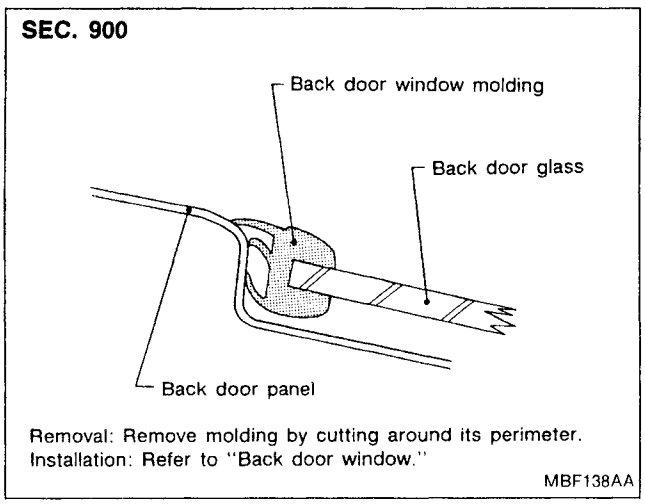

BT

Simpo PDF Merge and Split Unregistered Version - http://www.simpopdf.com

⑲ Back door weatherstrip

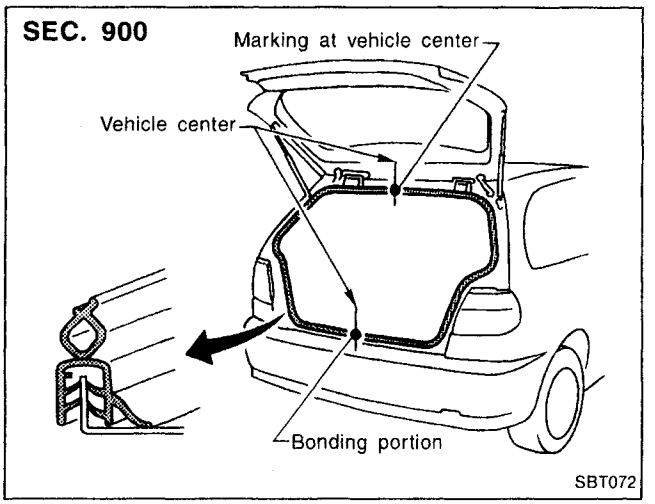

⑳ Rear combination lamp

- Rear combination lamps are installed with nuts and butyl sealant.

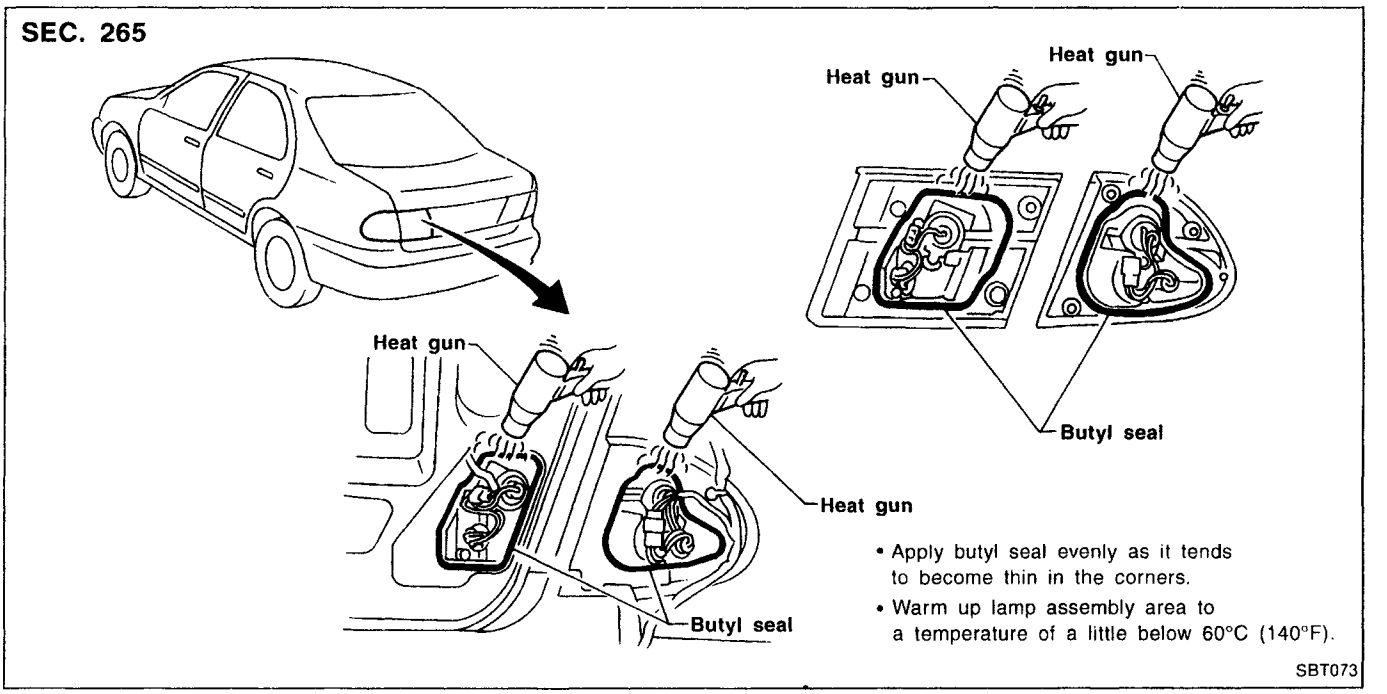

Simpo PDF Merge and Split Unregistered Version - http://www.simpopdf.com

㉑ Front air spoiler

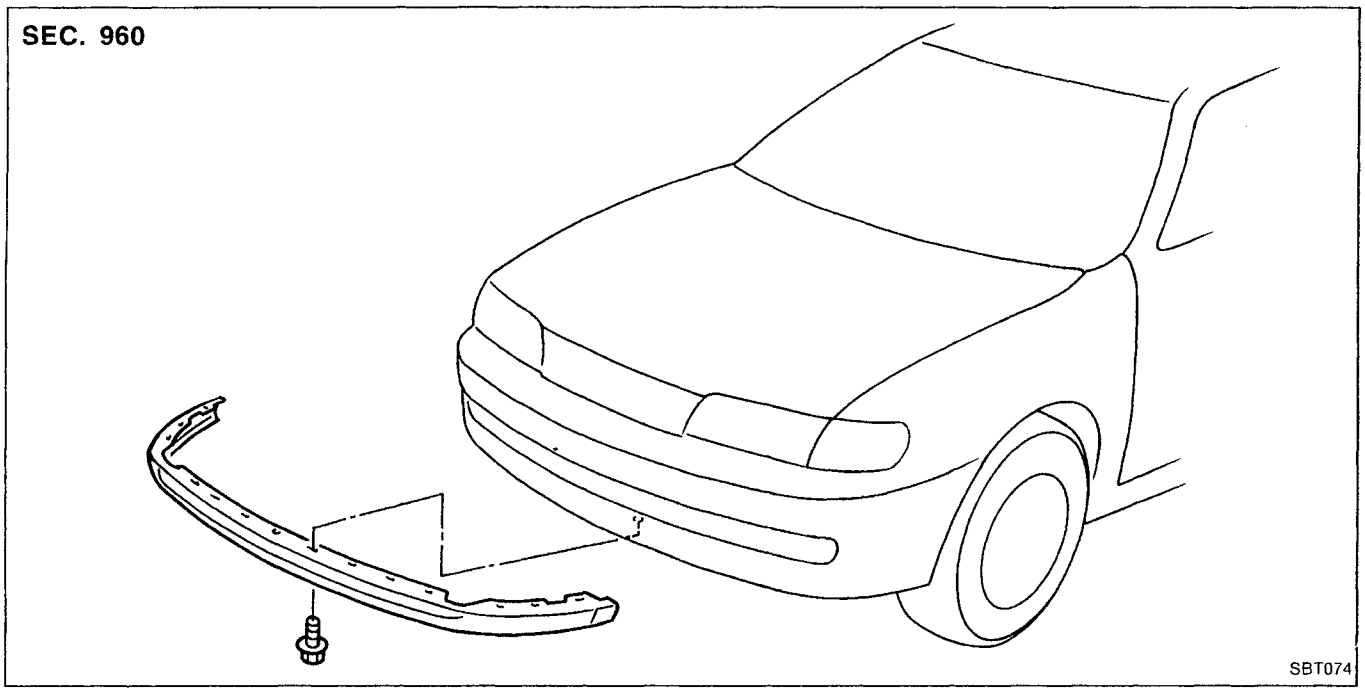

㉒ Front strut tower bar assembly

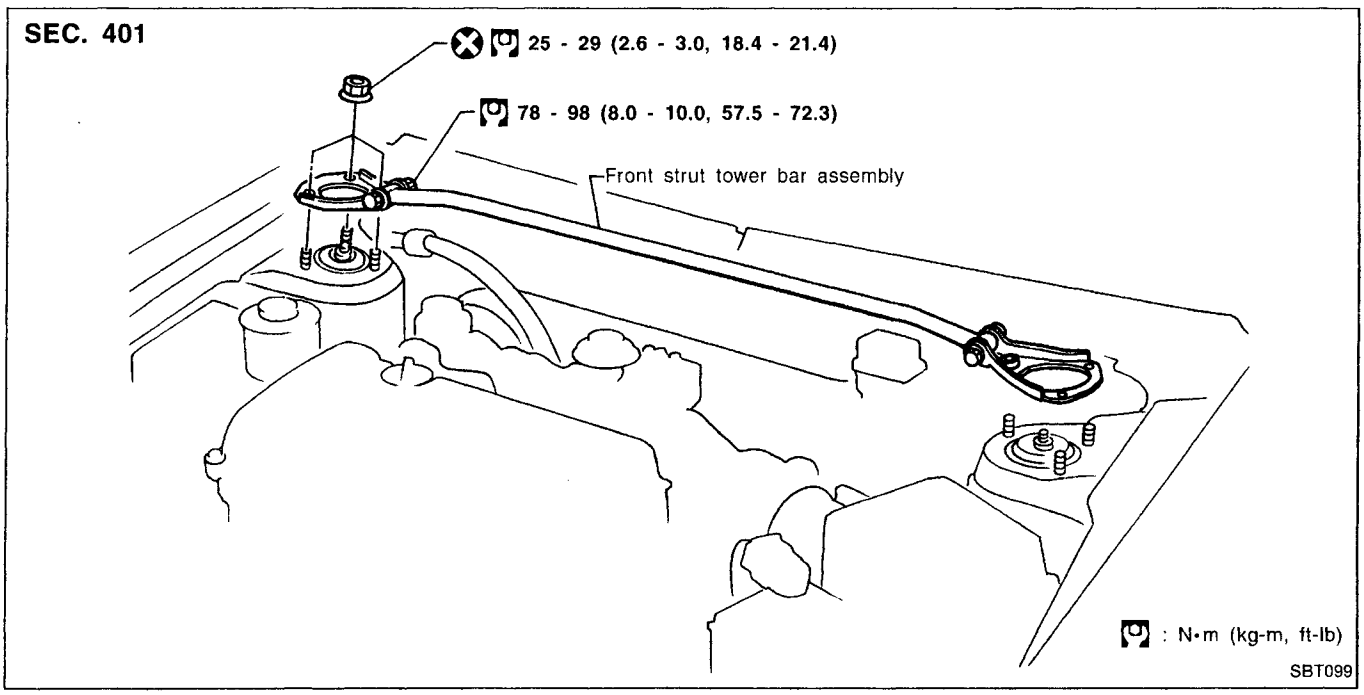

CAUTION:
Do not remove front strut tower bar assembly while vehicle is jacked up with wheels on.

BT

Simpo PDF Merge and Split Unregistered Version - http://www.simpopdf.com

㉓ Rear air spoiler

- When installing, make sure that there are not gaps or waves at ends of air spoiler.
- Before installing spoiler, clean and remove oil from surface where spoiler will be mounted.

4-door sedan

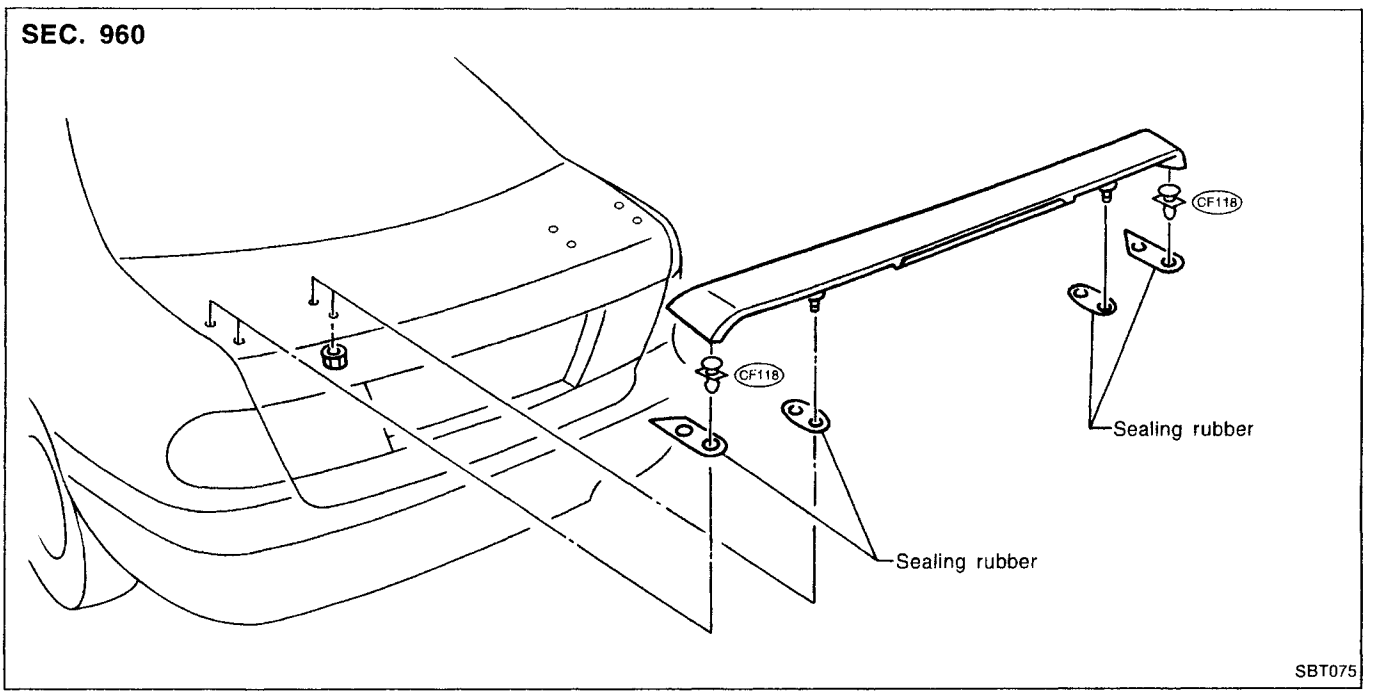

3-door and 5-door hatchback

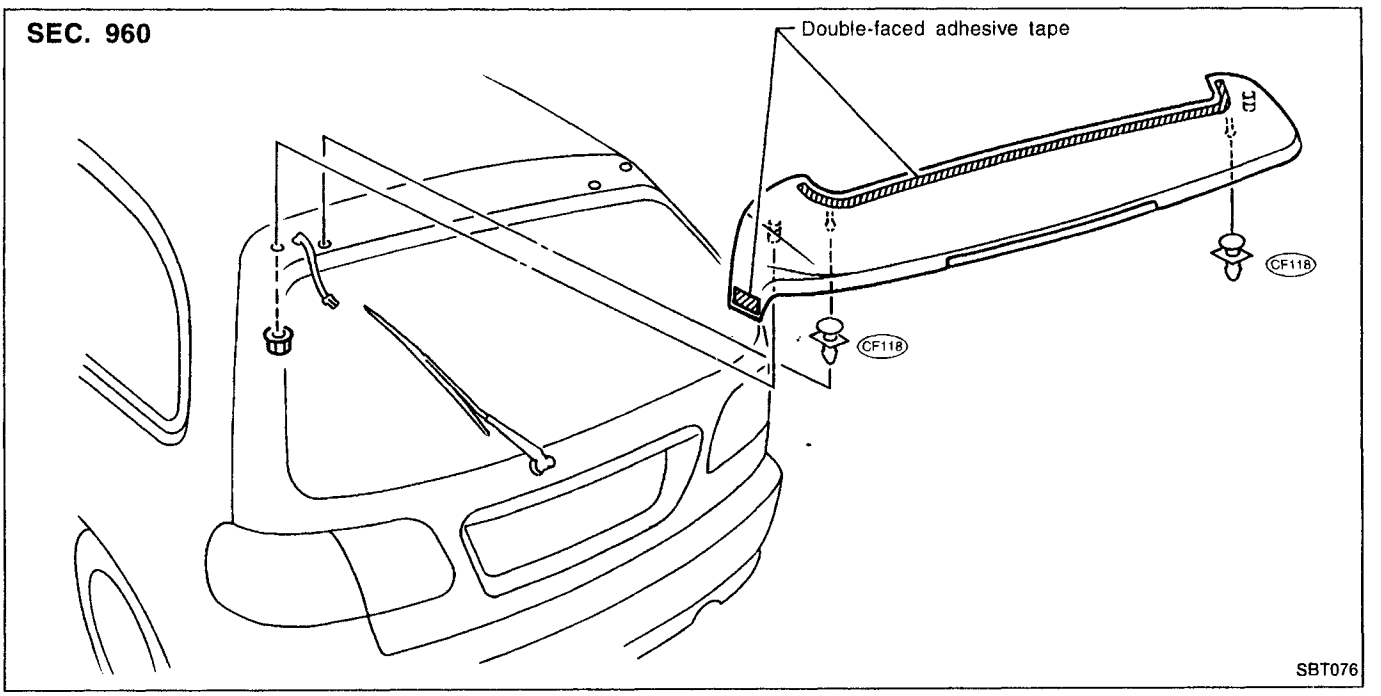

Simpo PDF Merge and Split Unregistered Version - http://www.simpopdf.com

- When removing or installing the seat trim, carefully handle it to keep dirt out and avoid damage.

★ **For Wiring Diagram, refer to "POWER SEAT" in EL section.**

Front Seat

SEC. 870

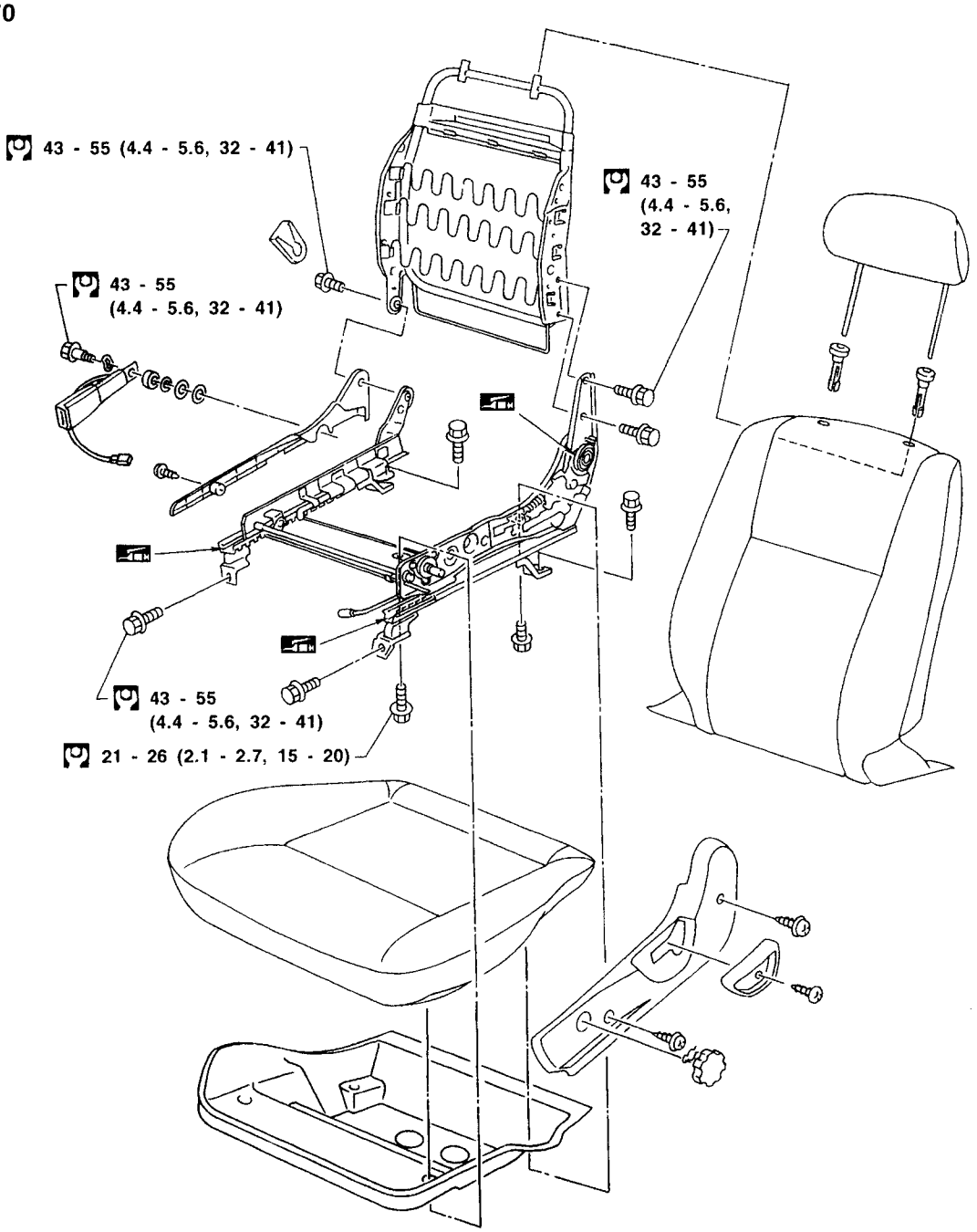

: N•m (kg-m, ft-lb)

SBT077

BT

Simpo PDF Merge and Split Unregistered Version - http://www.simpopdf.com

Heated Seat

- When handling seat, be extremely careful not to scratch heating unit.
- To replace heating unit, seat trim and pad should be separated.
- Do not use any organic solvent, such as thinner, benzene, alcohol, gasoline, etc. to clean trims.

Seatback heating unit removal & installation

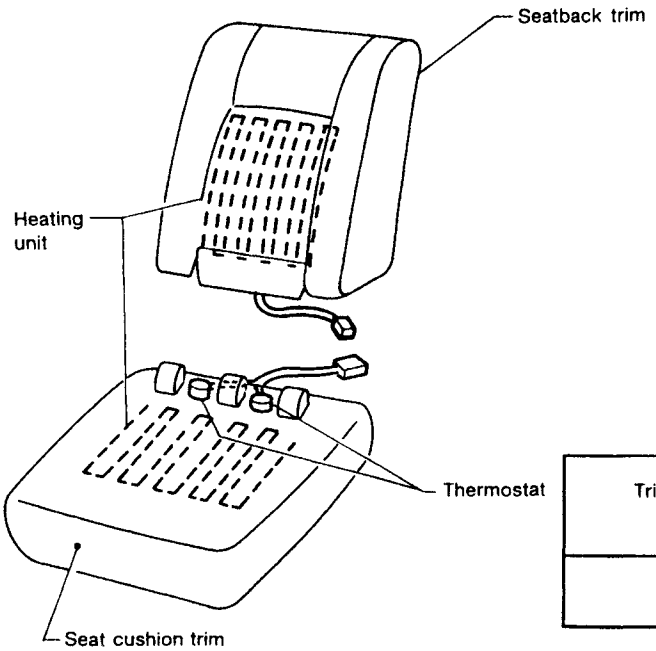

Trim temperature °C (°F)	Increasing to 35 - 45 (95 - 113)	Decreasing to 15 - 25 (59 - 77)
Thermostat operation	OFF	ON

SBF424H

★ **For Wiring Diagram, refer to "HEATED SEAT" in EL section.**

Simpo PDF Merge and Split Unregistered Version - http://www.simpopdf.com

Rear Seat

4-door sedan

SEC. 880

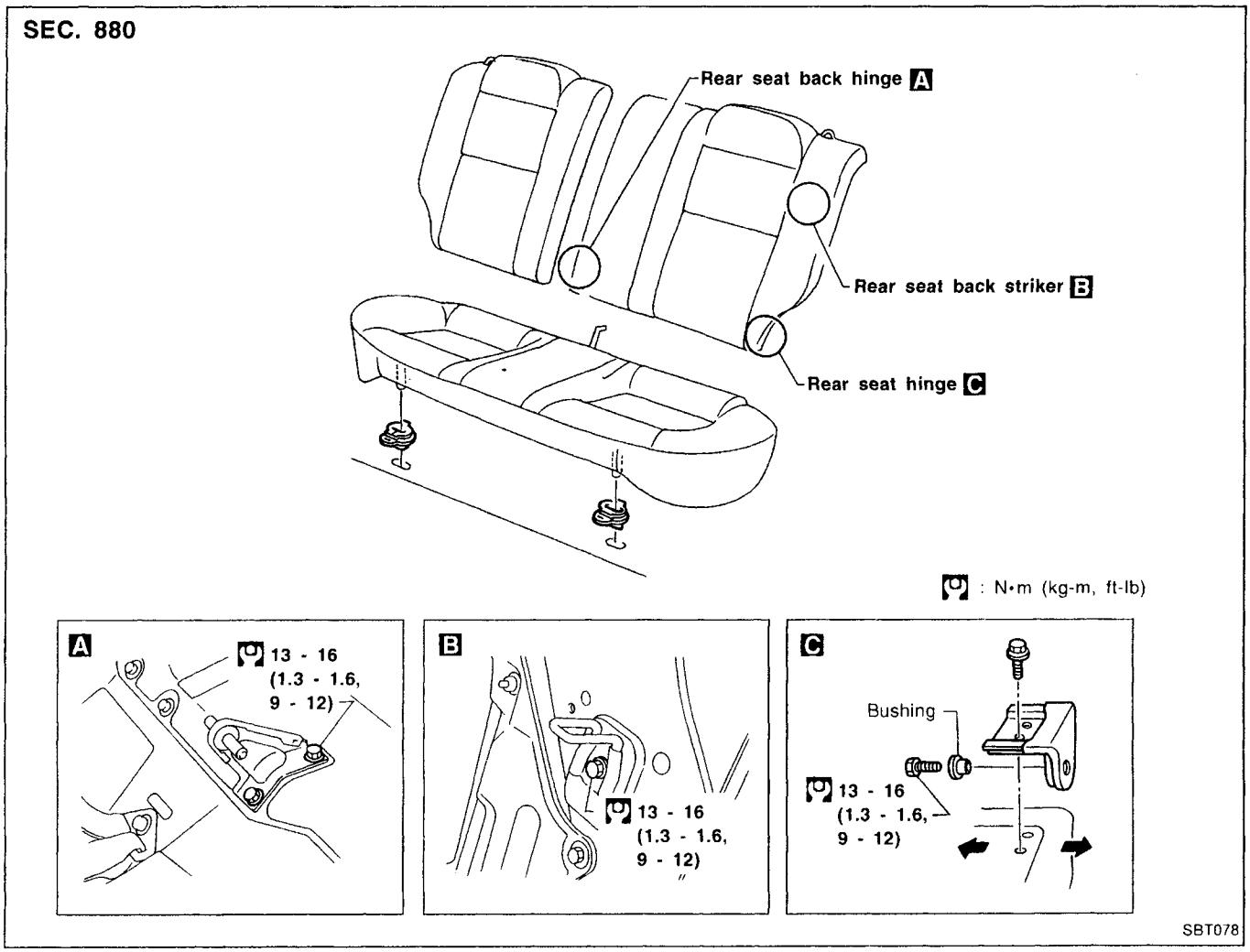

BT

Simpo PDF Merge and Split Unregistered Version - http://www.simpopdf.com

Rear Seat (Cont'd)

Hatchback

Type-1
SEC. 880

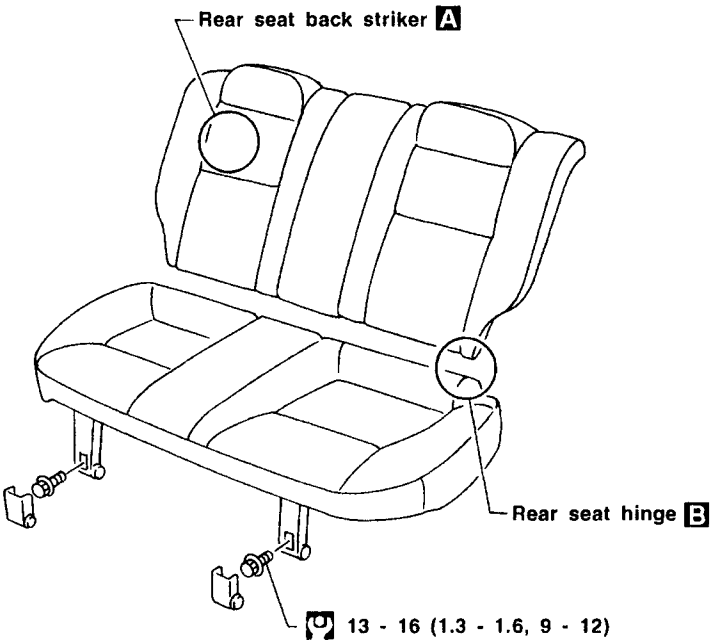

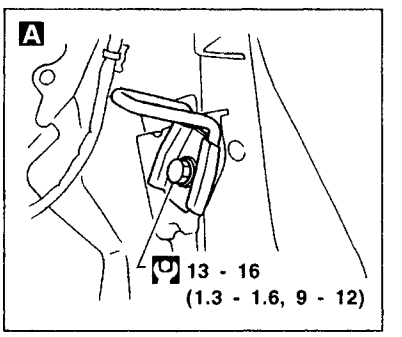

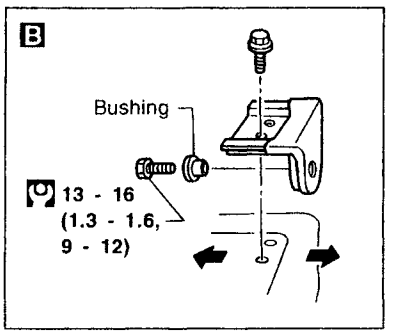

: N•m (kg-m, ft-lb)

SBT079

Type-2
SEC. 880

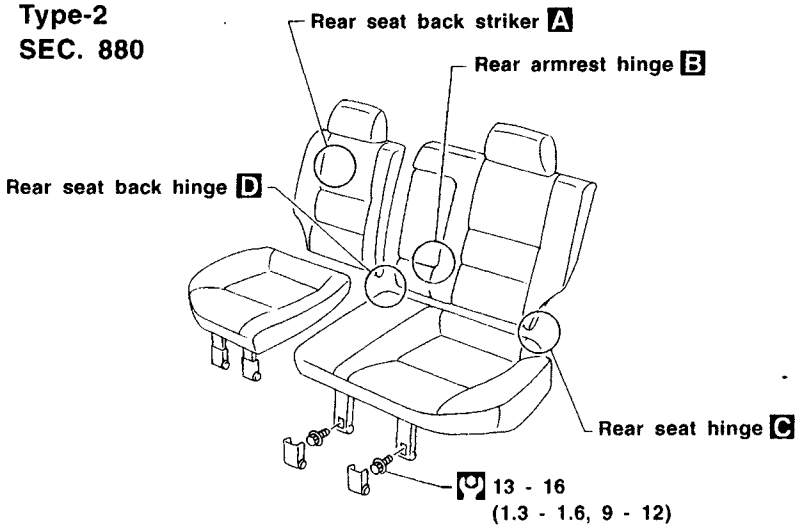

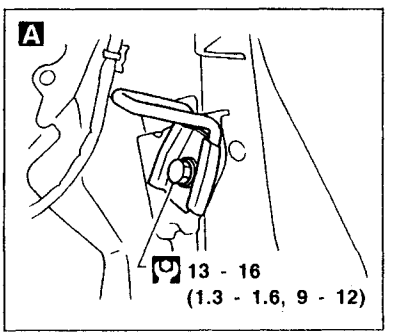

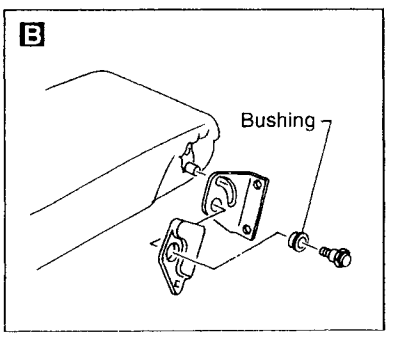

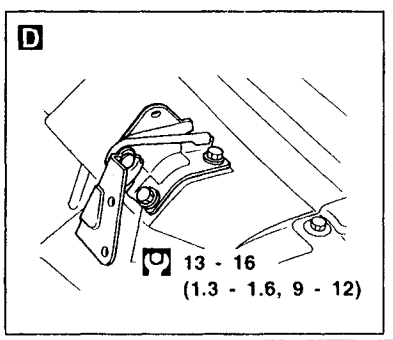

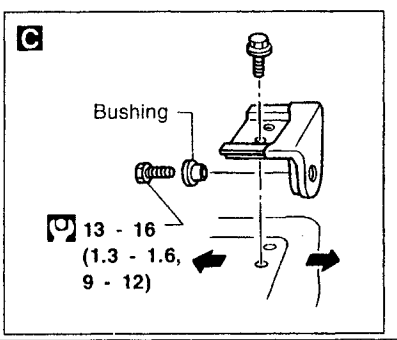

: N•m (kg-m, ft-lb)

SBT080

Simpo PDF Merge and Split Unregistered Version - http://www.simpopdf.com

ADJUSTMENT

Install motor & limit SW assembly and sunroof rail assembly in the following sequence:

1. Arrange equal lengths of link and wire assemblies on both sides of sunroof opening.
2. Connect sunroof connector to sunroof switch and positive (+) power supply.
3. Set lid assembly to fully closed position **A** by operating OPEN switch and TILT switch.
4. Fit outer side of lid assembly to the surface of roof on body outer panel.
5. Remove motor, and keep OPEN switch pressed until motor pinion gear reaches the end of its rotating range.
6. Install motor.
7. Check that motor drive gear fits properly in wires.
8. Press TILT-UP switch to check lid assembly for normal tilting.
9. Check sunroof lid assembly for normal operations (tilt-up, tilt-down, open, and close).

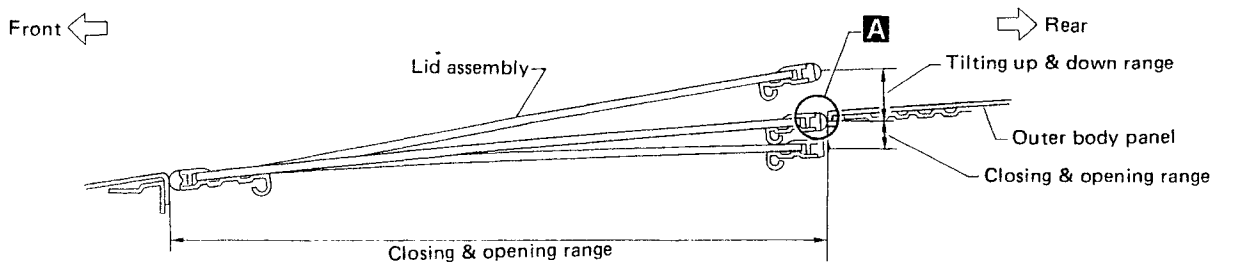

SBF920F

BT

Simpo PDF Merge and Split Unregistered Version - http://www.simpopdf.com

REMOVAL

- After any adjustment, check sunroof operation and lid alignment.
- Handle finisher plate and glass lid with care so not to cause damage.
- It is desirable for easy installation to mark each point before removal.

CAUTION:
Always work with a helper.

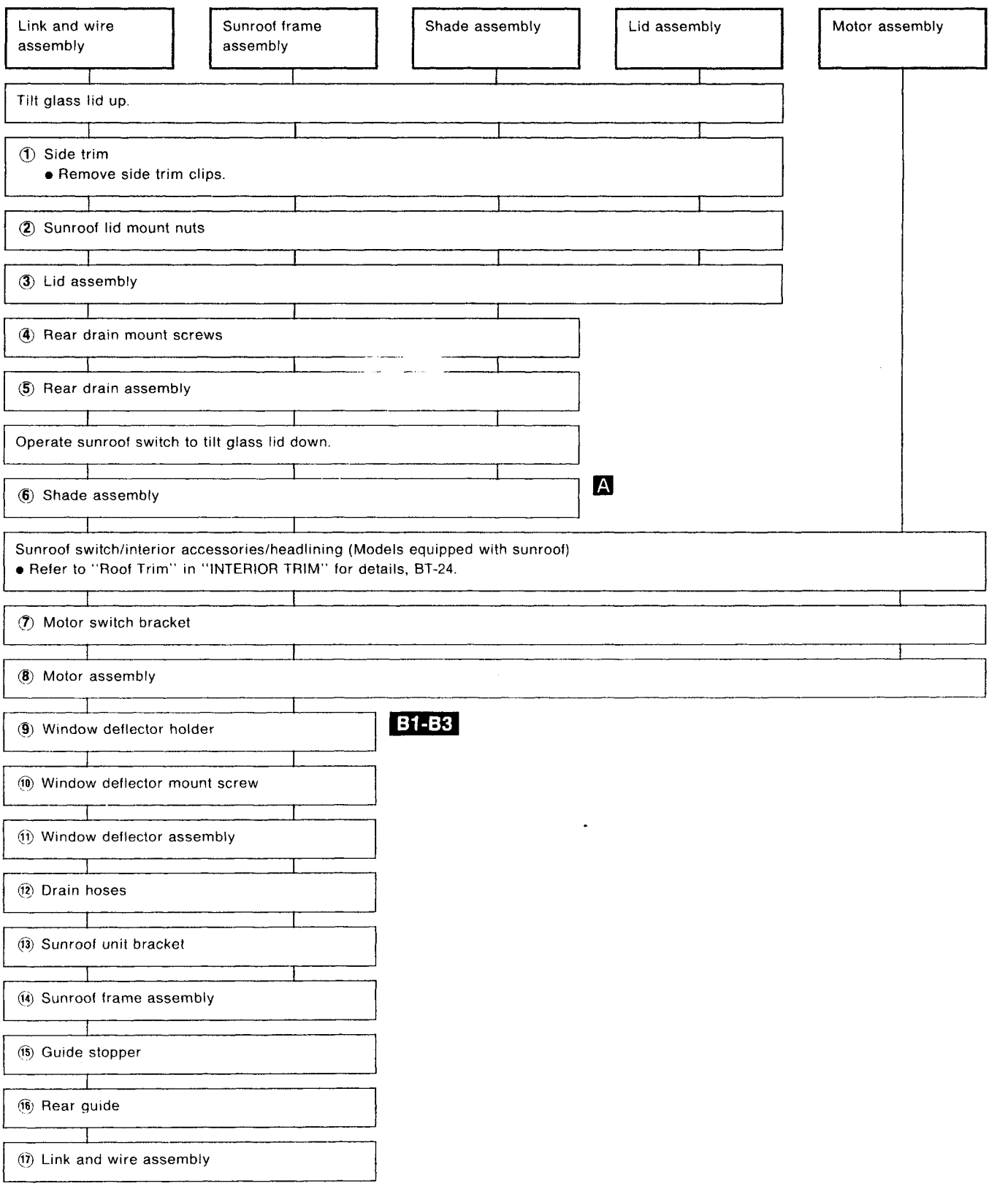

Simpo PDF Merge and Split Unregistered Version - http://www.simpopdf.com

★ **For Wiring Diagram, refer to "ELECTRIC SUNROOF" in EL section.**

SEC. 736

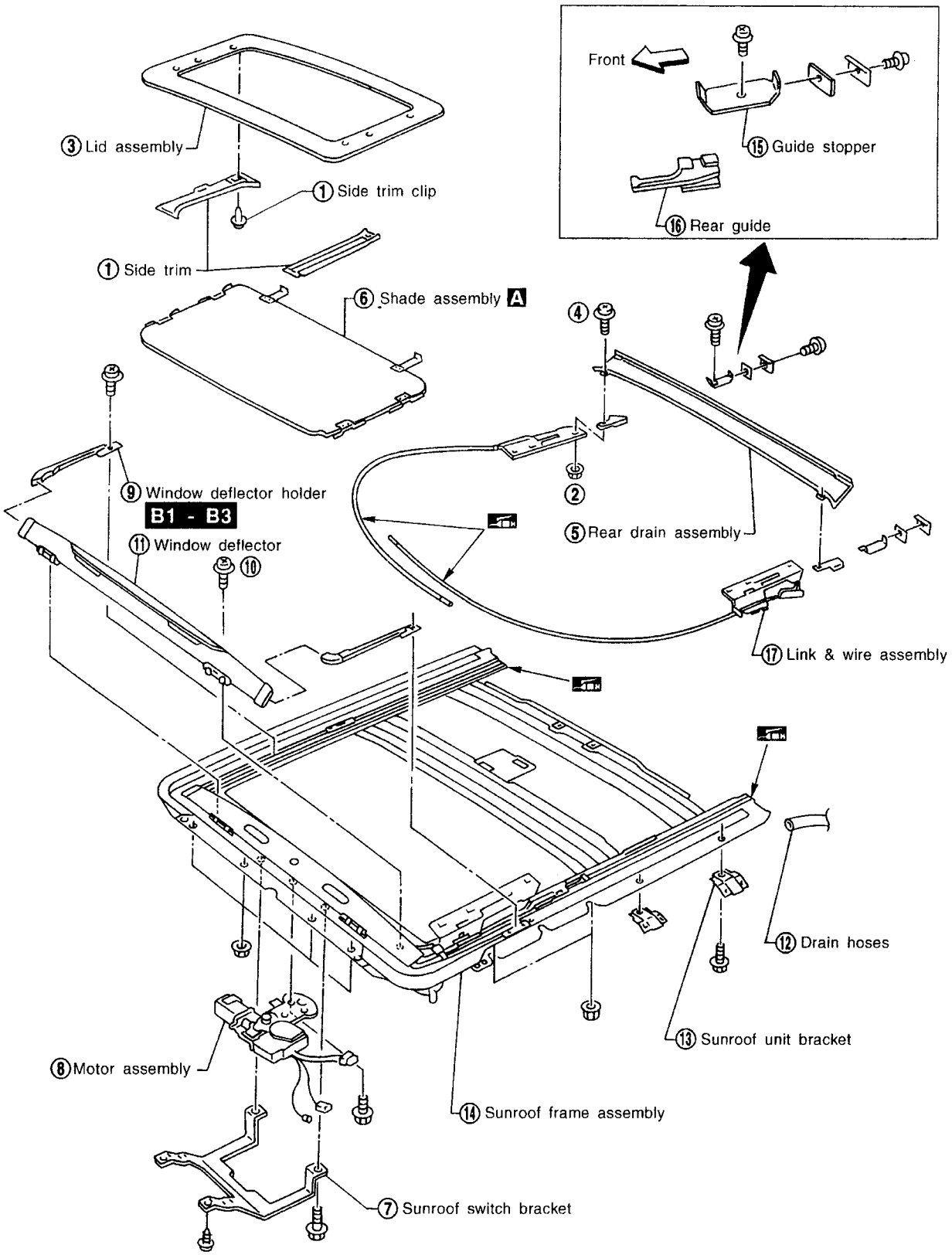

SBT081

BT

Simpo PDF Merge and Split Unregistered Version - http://www.simpopdf.com

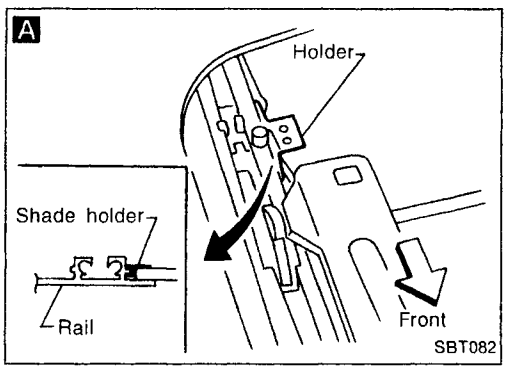

A Using flat-bladed screwdriver, pry shade assembly holder off rail. Then pull shade assembly forward to remove it from rail.

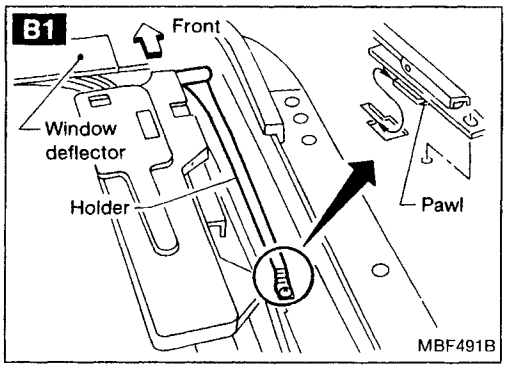

B1 Disengage pawls from rail, then remove window deflector holder.

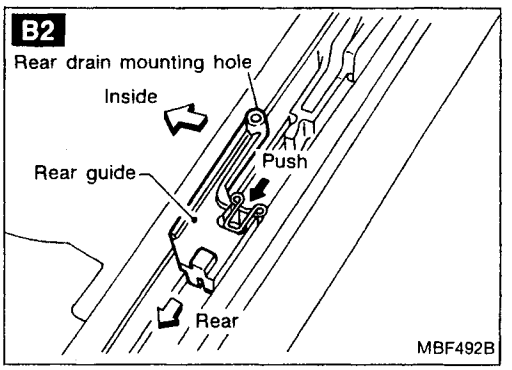

B2 Using flat-bladed screwdriver, pry stopper spring off rail groove. Then slide rear guide backward to remove it from rail.

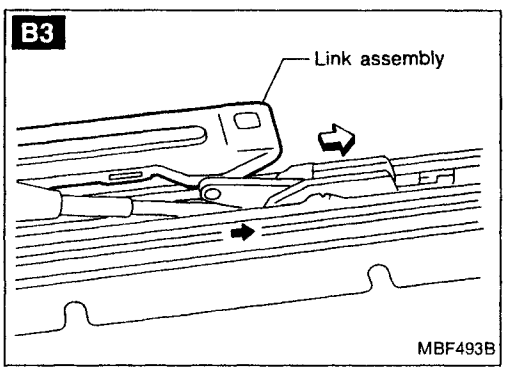

B3 Remove wire and link assembly from rail while pushing link back with flat-bladed screwdriver.

Simpo PDF Merge and Split Unregistered Version - http://www.simpopdf.com

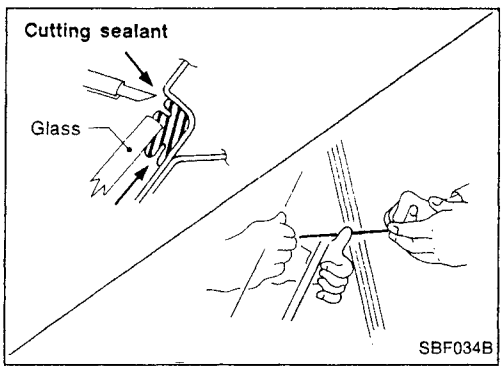

REMOVAL

After removing moldings, remove glass.

CAUTION:

Be careful not to scratch glass when removing.

INSTALLATION

- **Use genuine Nissan Sealant kit or equivalent. Follow instructions furnished with it.**
- **After installing the glass, the vehicle should remain stationary until the sealant hardens.**

WARNING:

Keep heat and open flames away as primers are flammable.

CAUTION:

Advise user not to drive the vehicle on rough roads until sealant has properly vulcanized.

- **Do not use sealant which is past its usable term.**
- **Do not leave cartridge unattended with its cap open.**
- **Keep primers and sealant in a cool, dry place. Ideally, they should be stored in a refrigerator.**
- **Molding must be installed securely so that it is in position and leaves no gap.**

Windshield and Rear Window

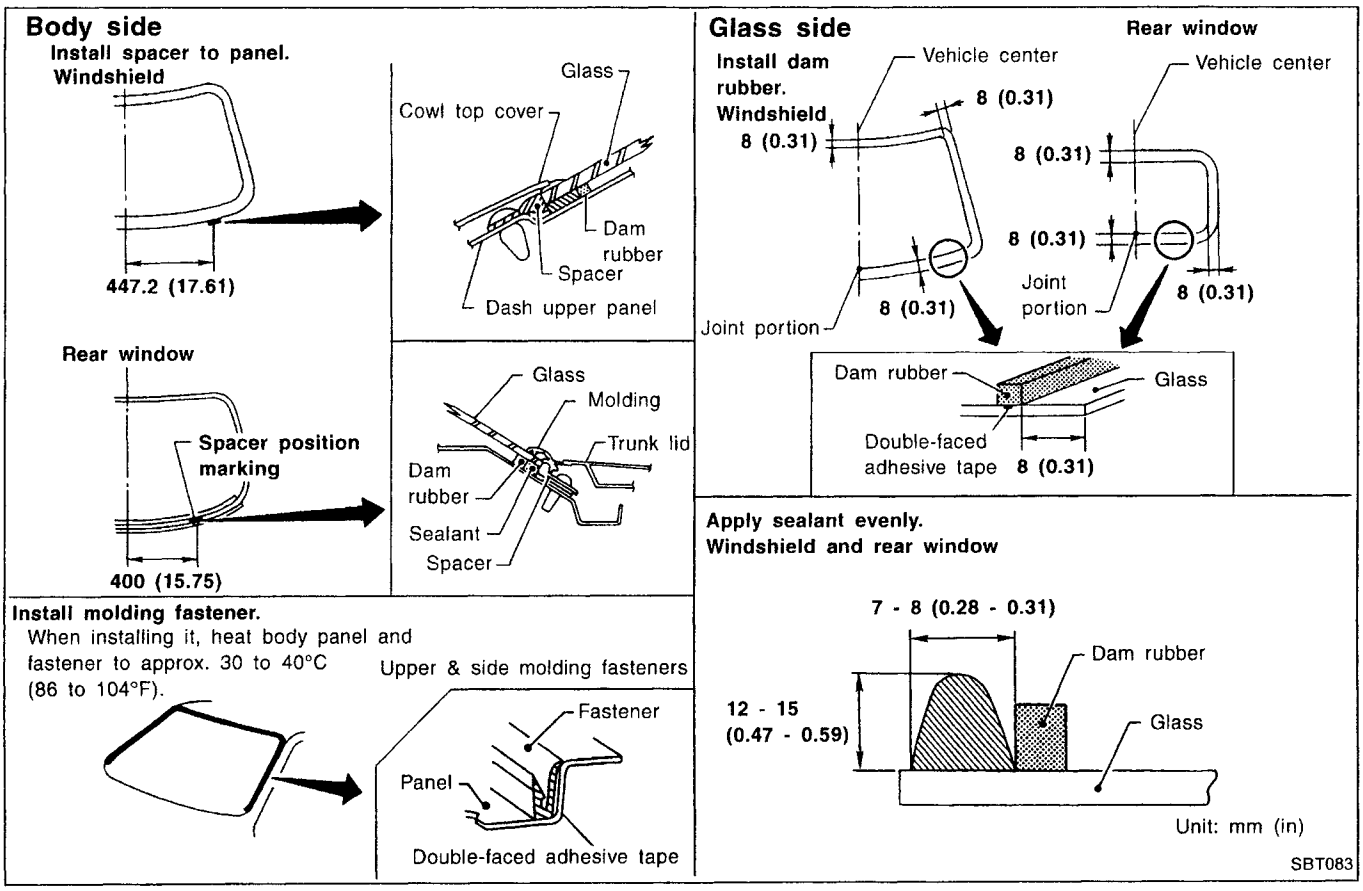

REPAIRING WATER LEAKS FOR WINDSHIELD

Leaks can be repaired without removing and reinstalling glass.

If water is leaking between caulking material and body or glass, determine the extent of leakage. This can be determined by applying water while pushing glass outward.

To stop the leak, apply primer and then sealant to the leak point.

Simpo PDF Merge and Split Unregistered Version - http://www.simpopdf.com

Back Door Window

SEC. 900

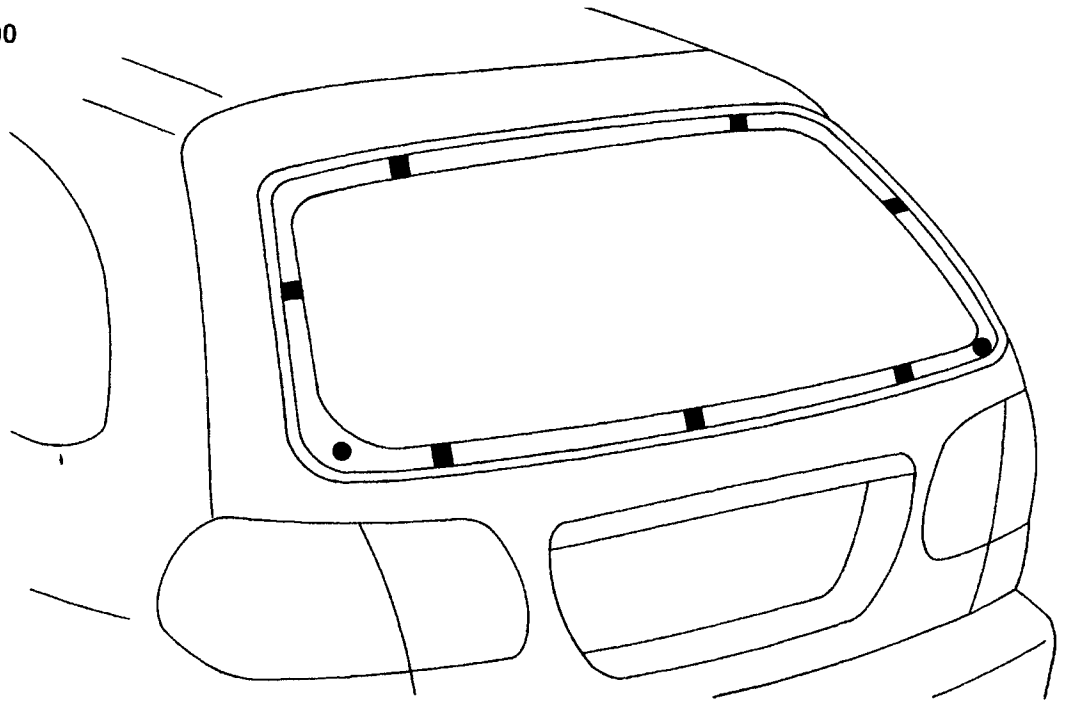

● : Locating pin

■ : Spacer

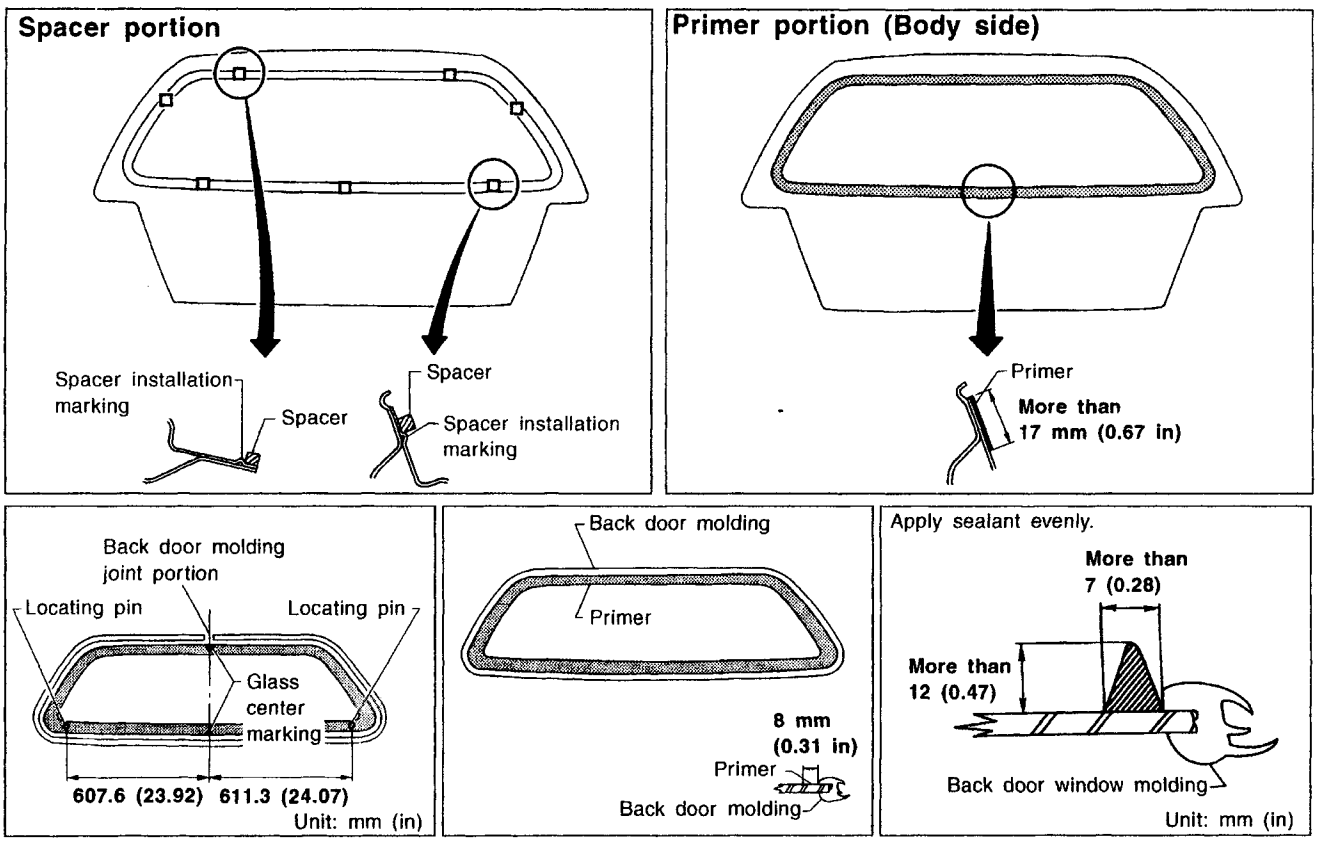

SBT098

Simpo PDF Merge and Split Unregistered Version - http://www.simpopdf.com

Rear Side Window

5-door hatchback
SEC. 830

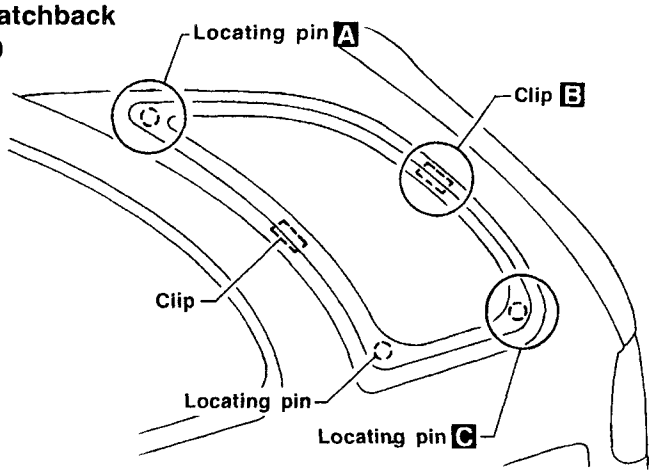

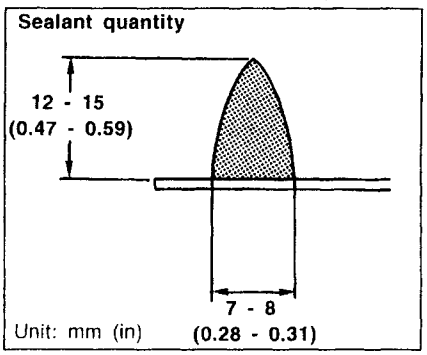

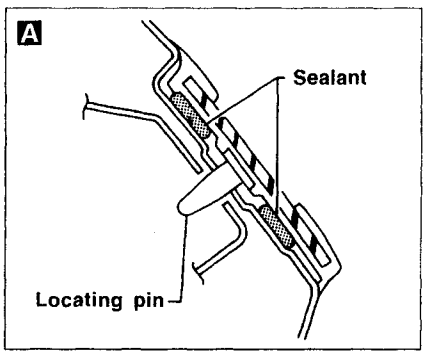

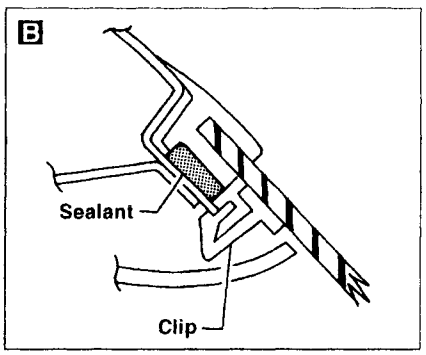

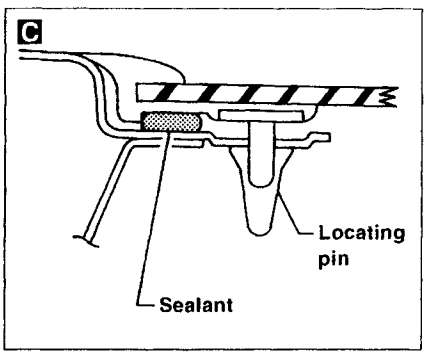

SBT084

3-door hatchback
SEC. 830

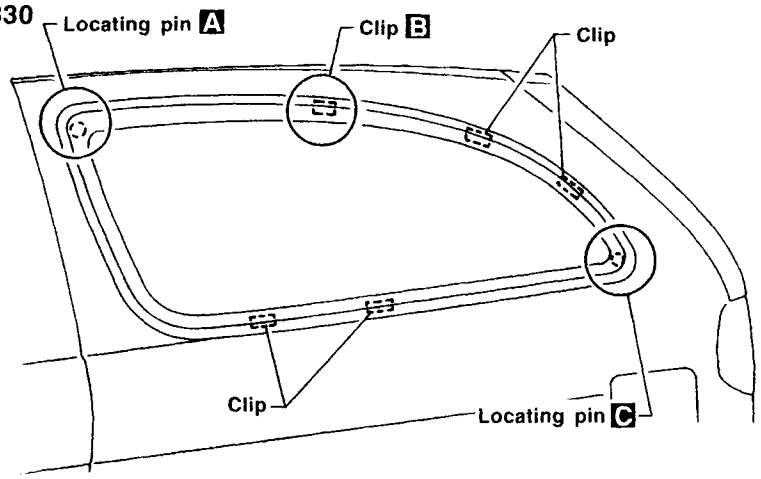

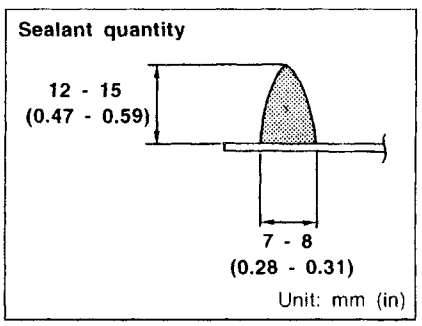

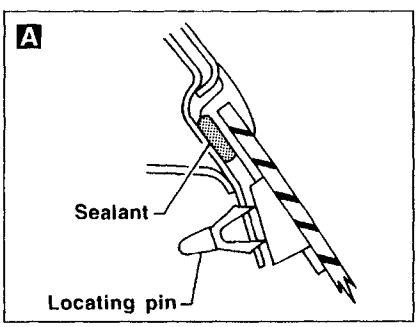

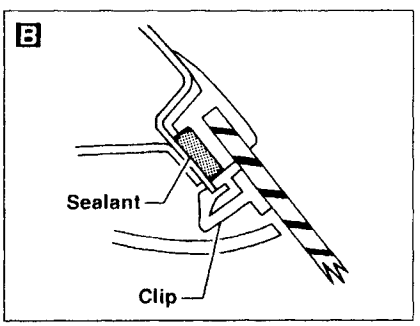

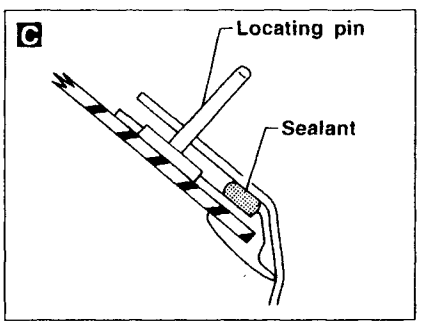

SBT085

BT

Simpo PDF Merge and Split Unregistered Version - http://www.simpopdf.com

Door Mirror

CAUTION:
Be careful not to scratch door rearview mirror body.

★ **For Wiring Diagram, refer to "POWER DOOR MIRROR" in EL section.**

REMOVAL — Door mirror

① Remove door trim. Refer to "Door Trim" for details, BT-22.
② Remove inner cover from front corner of door.
③ Disconnect door mirror harness connector.
④ Remove bolts securing door mirror, then remove door mirror assembly.

SEC. 963

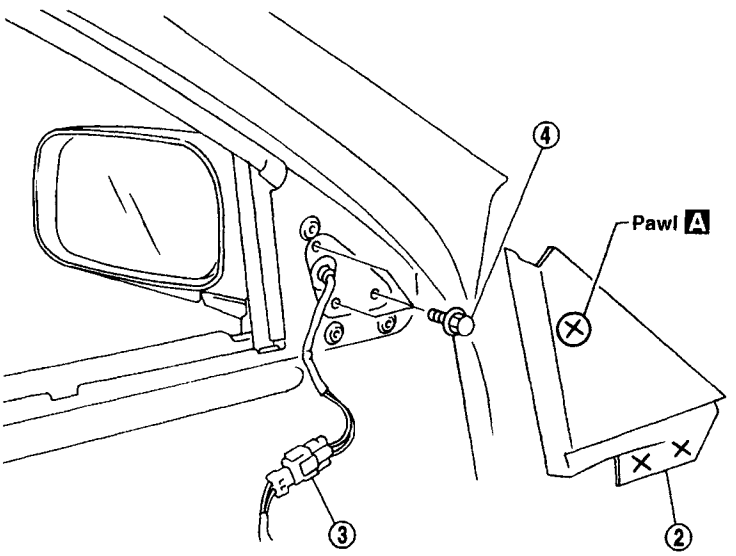

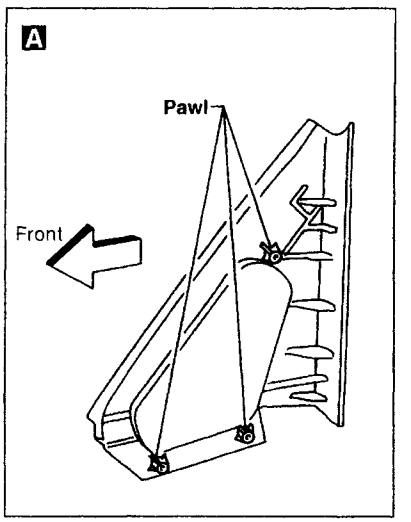

Removal:

- Wrap flat-bladed of screwdriver with a cloth to prevent scratching rear of door mirror. Do not insert screwdriver too far.

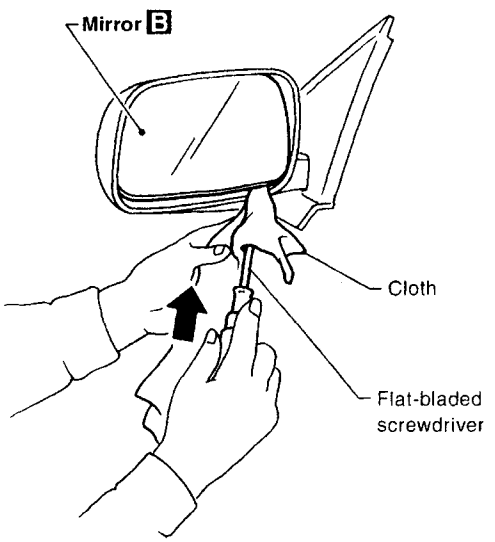

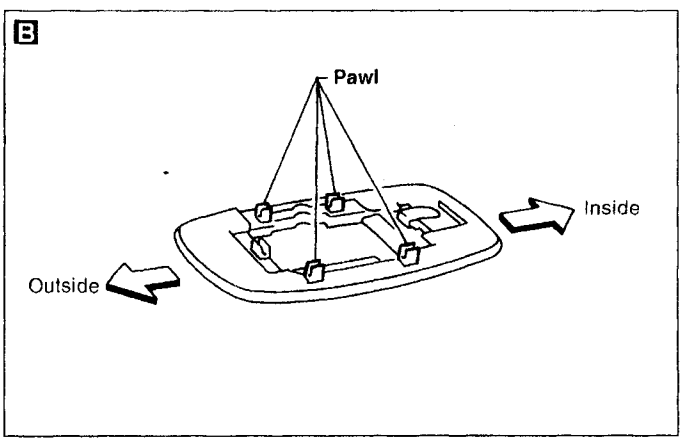

SBT086

Simpo PDF Merge and Split Unregistered Version - http://www.simpopdf.com

- All dimensions indicated in figures are actual ones.
- When using a tracking gauge, adjust both pointers to equal length. Then check the pointers and gauge itself to make sure there is no free play.
- When a measuring tape is used, check to be sure there is no elongation, twisting or bending.
- Measurements should be taken at the center of the mounting holes.
- An asterisk (*) following the value at the measuring point indicates that the measuring point on the other side is symmetrically the same value.
- The coordinates of the measurement points are the distances measured from the standard line of "X", "Y" and "Z".

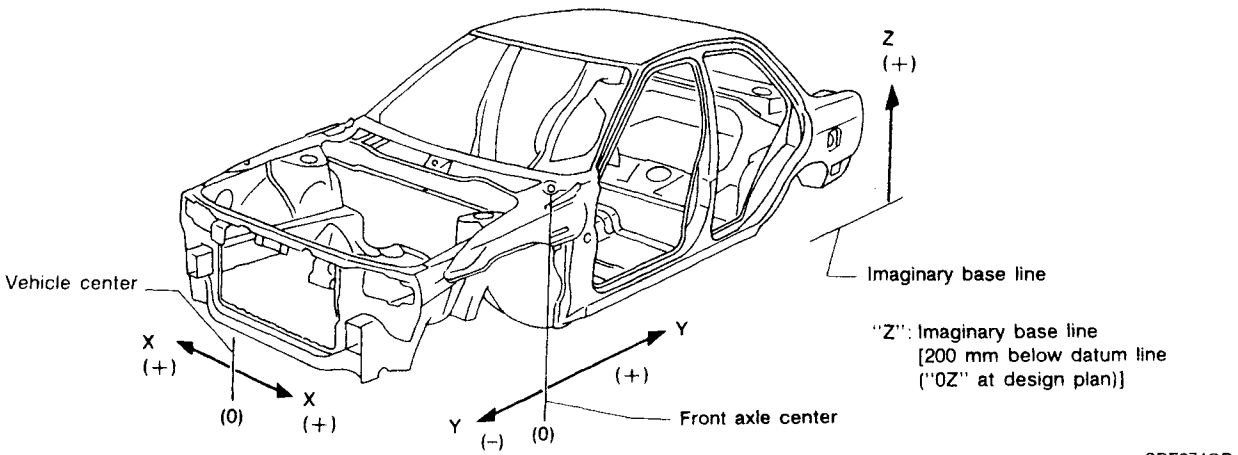

SBF874GB

Engine Compartment

MEASUREMENT

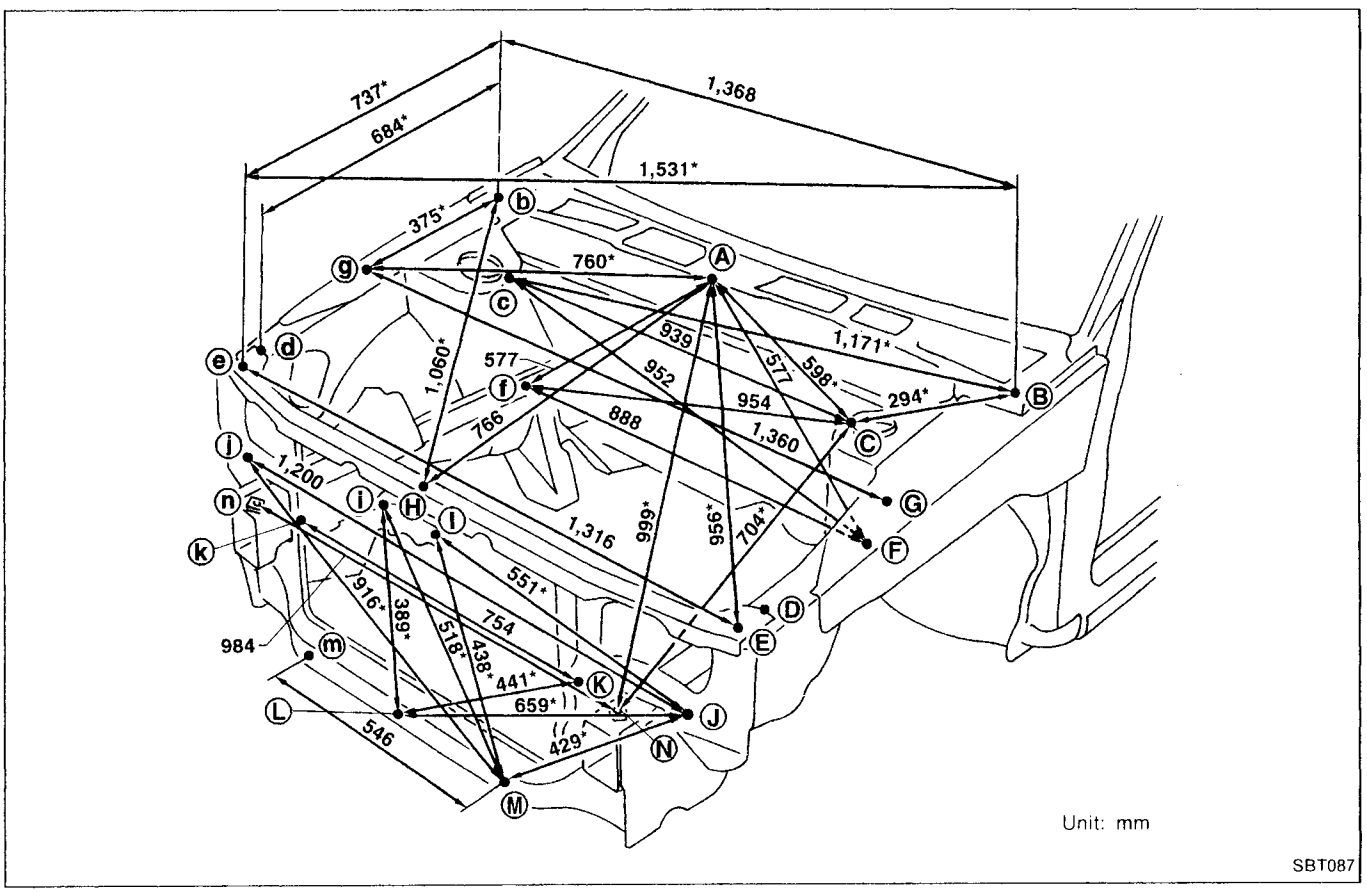

SBT087

BT

Simpo PDF Merge and Split Unregistered Version - http://www.simpopdf.com

Engine Compartment (Cont'd)

MEASUREMENT POINTS

Unit: mm

Cowl top center

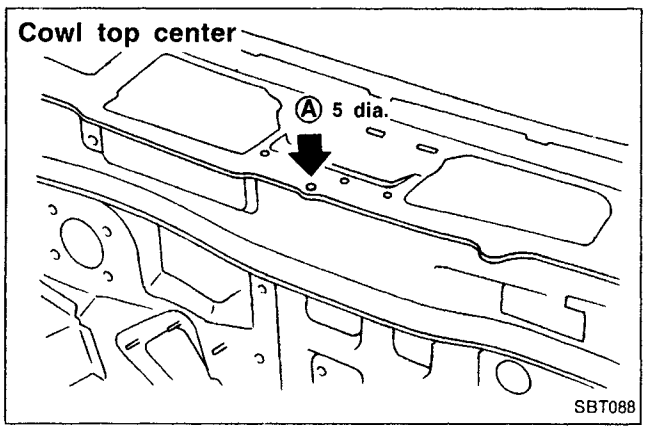

Radiator core support upper and Radiator core support side

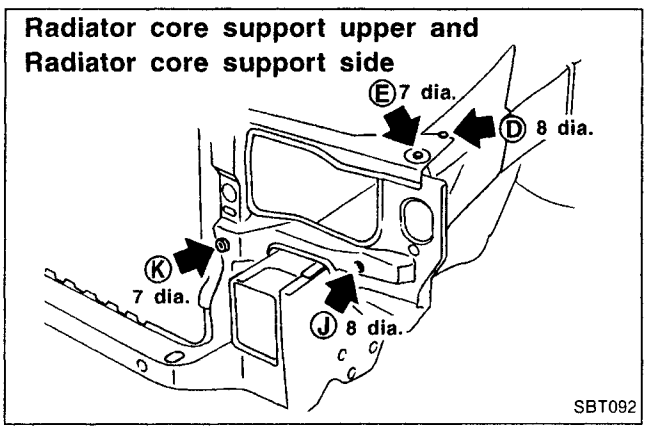

Strut tower and cowl top side

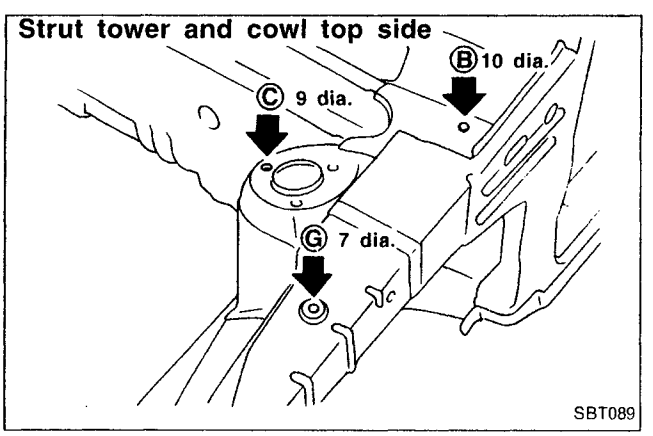

Front side

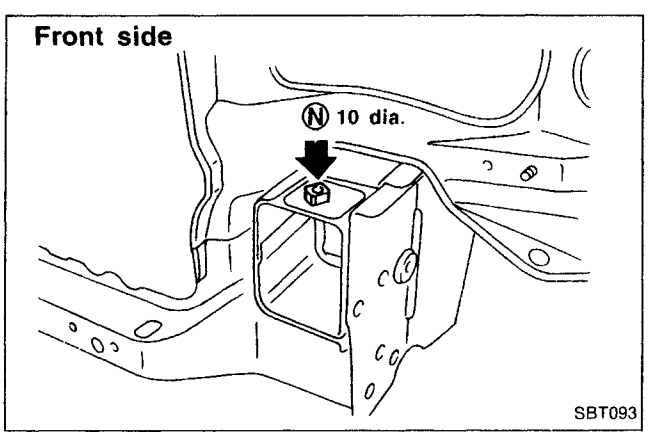

Front side member RH side

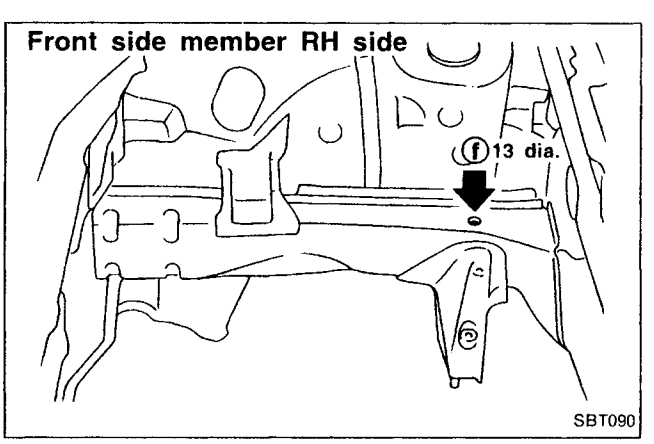

Radiator core support lower

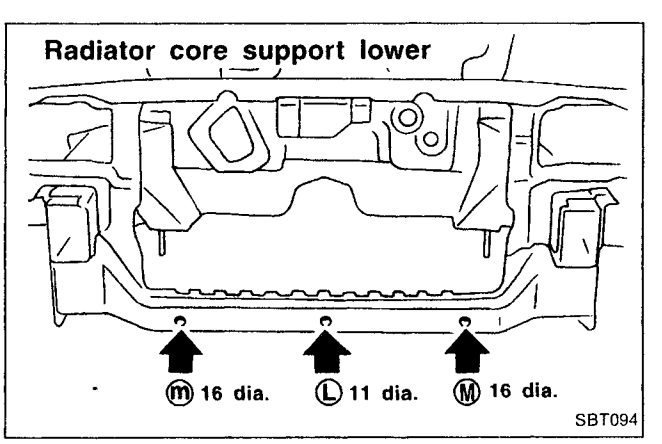

Radiator core support upper center

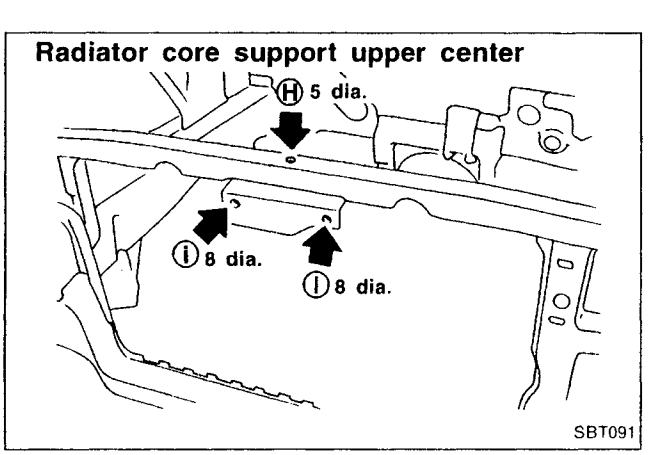

Simpo PDF Merge and Split Unregistered Version - http://www.simpopdf.com

Underbody

MEASUREMENT

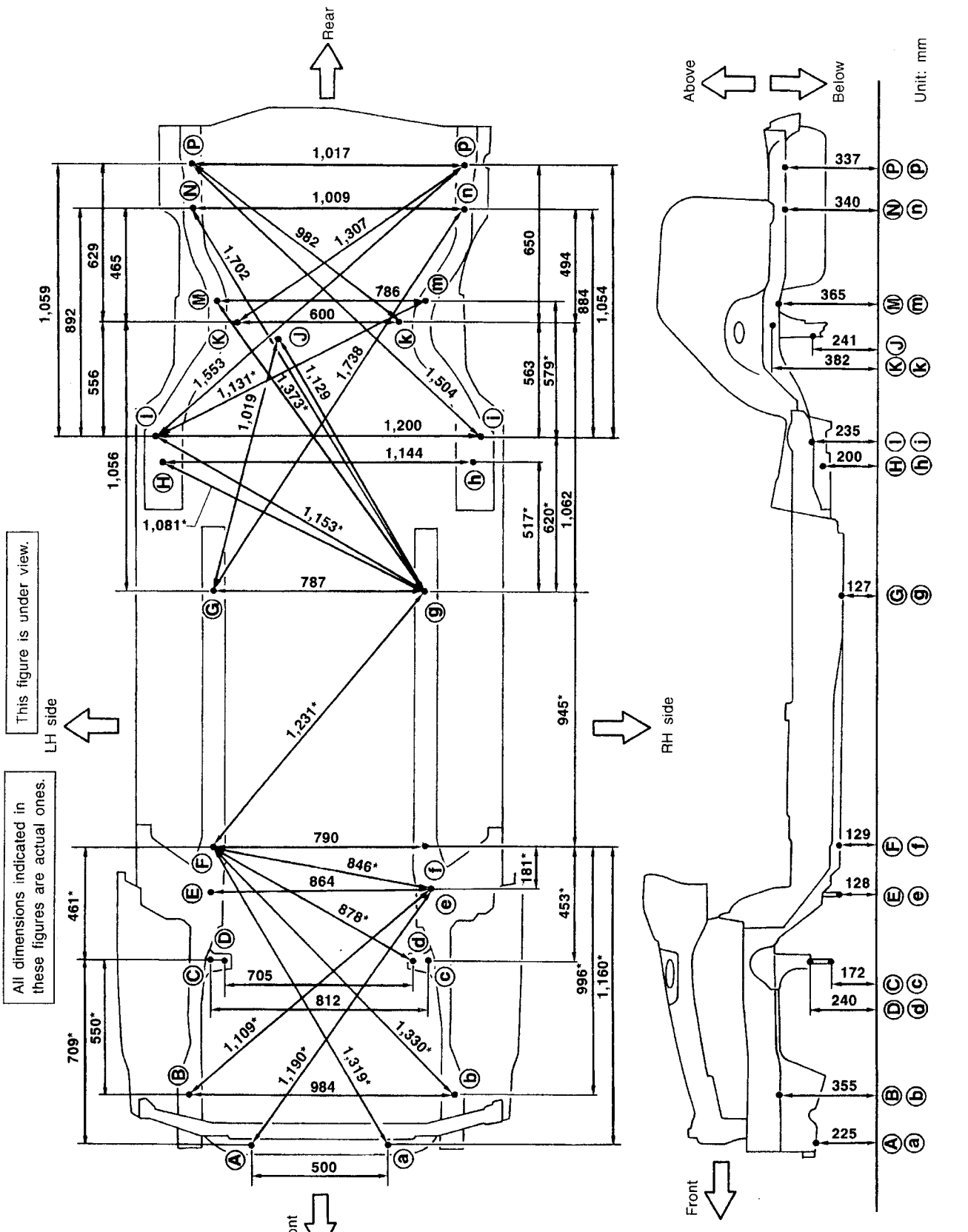

SBT096

Simpo PDF Merge and Split Unregistered Version - http://www.simpopdf.com

Underbody (Cont'd)

MEASUREMENT POINTS

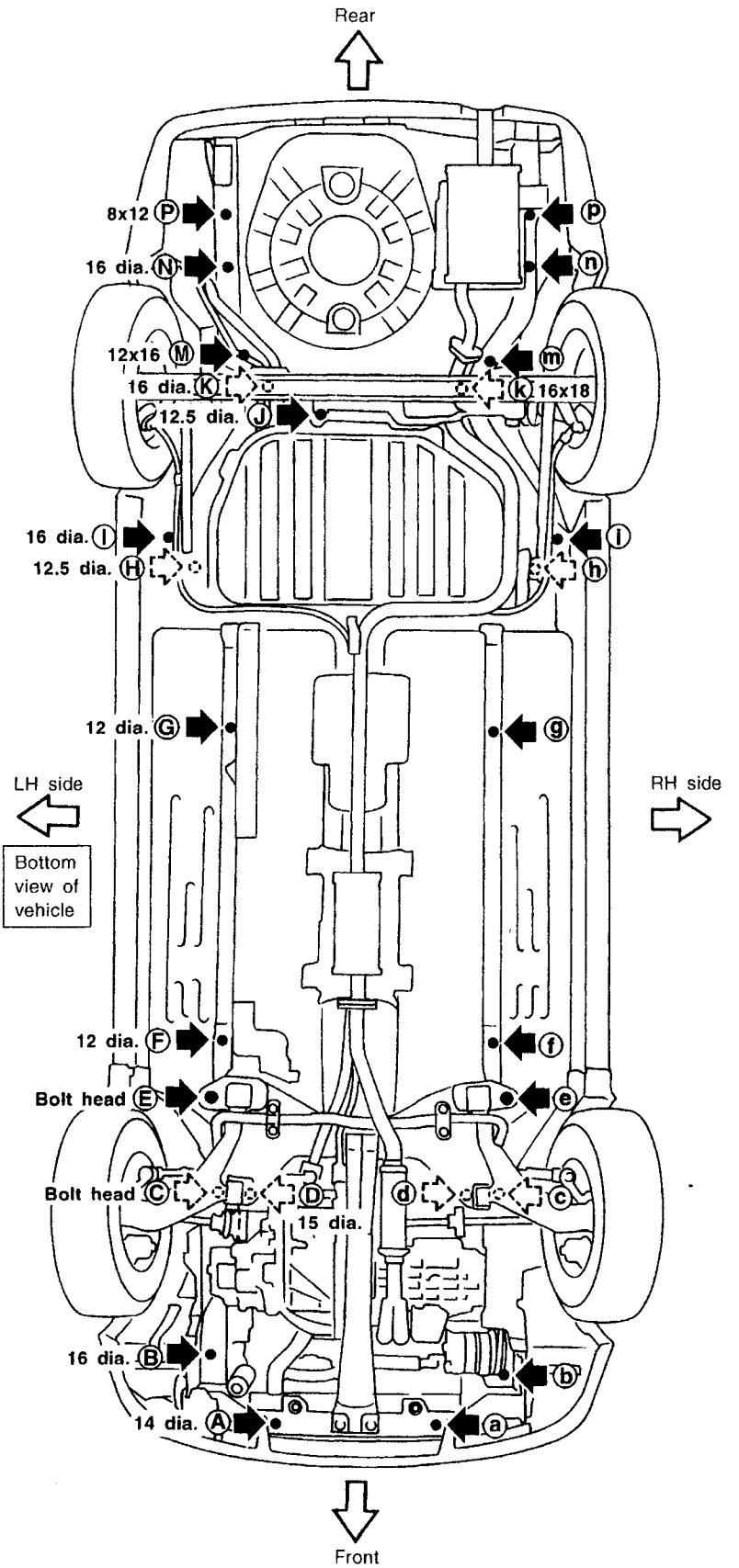

Front coordinates:	Rear coordinates:	
Ⓐ, ⓐ	Ⓖ, ⓖ	Ⓟ
X : 250	X : 393.5	X : 475
Y : –632	Y : 1,460	Y : 3,082
Z : 224.8	Z : 126.9	Z : 336.8
Ⓑ, ⓑ	Ⓗ, ⓗ	ⓟ
X : 492	X : 572	X : –542
Y : –450	Y : 1,940	Y : 3,082
Z : 355	Z : 200	Z : 336.8
Ⓒ, ⓒ	Ⓘ, ⓘ	
X : 406	X : 600	
Y : 64	Y : 2,035	
Z : 172	Z : 235.2	
Ⓓ, ⓓ	Ⓙ	
X : 352.7	X : 150	
Y : 69	Y : 2,442.9	
Z : 240	Z : 241	
Ⓔ, ⓔ	Ⓚ	
X : 432	X : 300	
Y : 338	Y : 2,480	
Z : 128	Z : 381.8	
Ⓕ, ⓕ	ⓚ	
X : 395	X : –300	
Y : 515	Y : 2,480	
Z : 129.2	Z : 405.8	
	Ⓜ, ⓜ	
	X : 393	
	Y : 2,560	
	Z : 365	
	Ⓝ	
	X : 470	
	Y : 2,911	
	Z : 339.6	
	ⓝ	
	X : –539	
	Y : 2,911	
	Z : 339.6	

Unit: mm

Front and rear strut tower centers

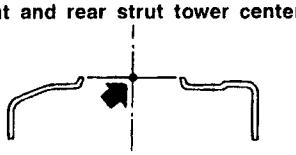

Coordinates:

Ⓡ, ⓡ
X : 522.2
Y : 18.1
Z : 571.7

Ⓢ, ⓢ
X : 465
Y : 2,456.4
Z : 522

Front Ⓡ, ⓡ 76 dia.
Rear Ⓢ, ⓢ 62 dia.

SBT097

Simpo PDF Merge and Split Unregistered Version - http://www.simpopdf.com

SECTION CL

CONTENTS

PRECAUTIONS AND PREPARATION 2
- Precautions 2
- Preparation 2

CLUTCH SYSTEM — Hydraulic Type 3

CLUTCH SYSTEM — Mechanical Type 4

INSPECTION AND ADJUSTMENT 5
- Adjusting Clutch Pedal 5
- Bleeding Procedure — Hydraulic type 5

HYDRAULIC CLUTCH CONTROL 6
- Clutch Master Cylinder 6
- Operating Cylinder 7
- Clutch Damper 8

CLUTCH RELEASE MECHANISM 9

CLUTCH DISC AND CLUTCH COVER 11
- Clutch Disc 11
- Clutch Cover and Flywheel 12

SERVICE DATA AND SPECIFICATIONS (SDS) 13
- General Specifications 13
- Inspection and Adjustment 14

Simpo PDF Merge and Split Unregistered Version - http://www.simpopdf.com

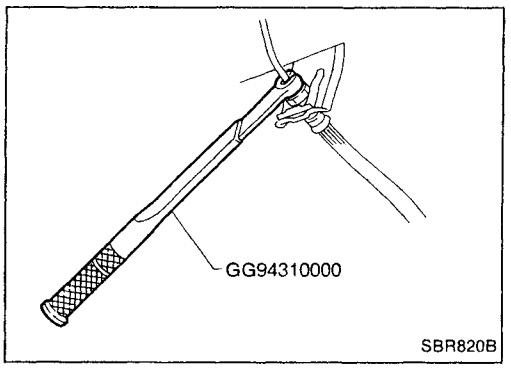

Precautions

- **Recommended fluid is brake fluid "DOT 3".**
- **Do not reuse drained brake fluid.**
- **Be careful not to splash brake fluid on painted areas.**
- **When removing and installing clutch piping, use Tool.**
- **Use new brake fluid to clean or wash all parts of master cylinder, operating cylinder and clutch damper.**
- **Never use mineral oils such as gasoline or kerosene. It will ruin the rubber parts of the hydraulic system.**

WARNING:
After cleaning clutch disc, wipe it with a dust collector. Do not use compressed air.

Preparation

SPECIAL SERVICE TOOLS

Tool number Tool name	Description	
GG94310000 Flare nut torque wrench	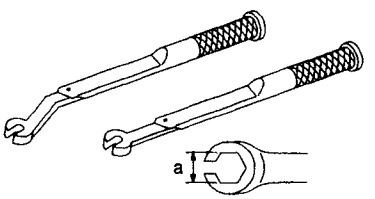 NT406	Removing and installing clutch piping **a: 10 mm (0.39 in)**
KV30101600 (New) KV30101000 (Former) Clutch aligning bar	New 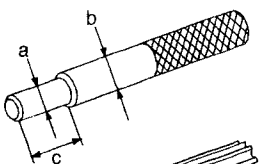 Former 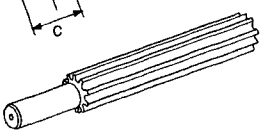 NT645	Installing clutch cover and clutch disc **a: 15.9 mm (0.626 in) dia.** **b: 17.9 mm (0.705 in) dia.** **c: 40 mm (1.57 in)**
ST20050240 Diaphragm spring adjusting wrench	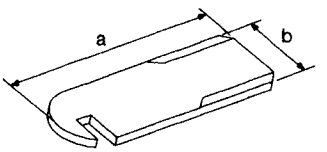 NT404	Adjusting unevenness of diaphragm spring of clutch cover **a: 150 mm (5.91 in)** **b: 25 mm (0.98 in)**

COMMERCIAL SERVICE TOOLS

Tool name	Description	
Equivalent to GG94310000 ① Flare nut crows foot ② Torque wrench	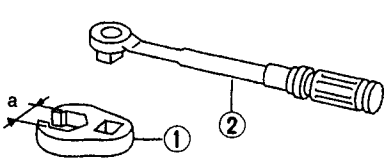 NT360	Removing and installing clutch piping **a: 10 mm (0.39 in)**

Simpo PDF Merge and Split Unregistered Version - http://www.simpopdf.com

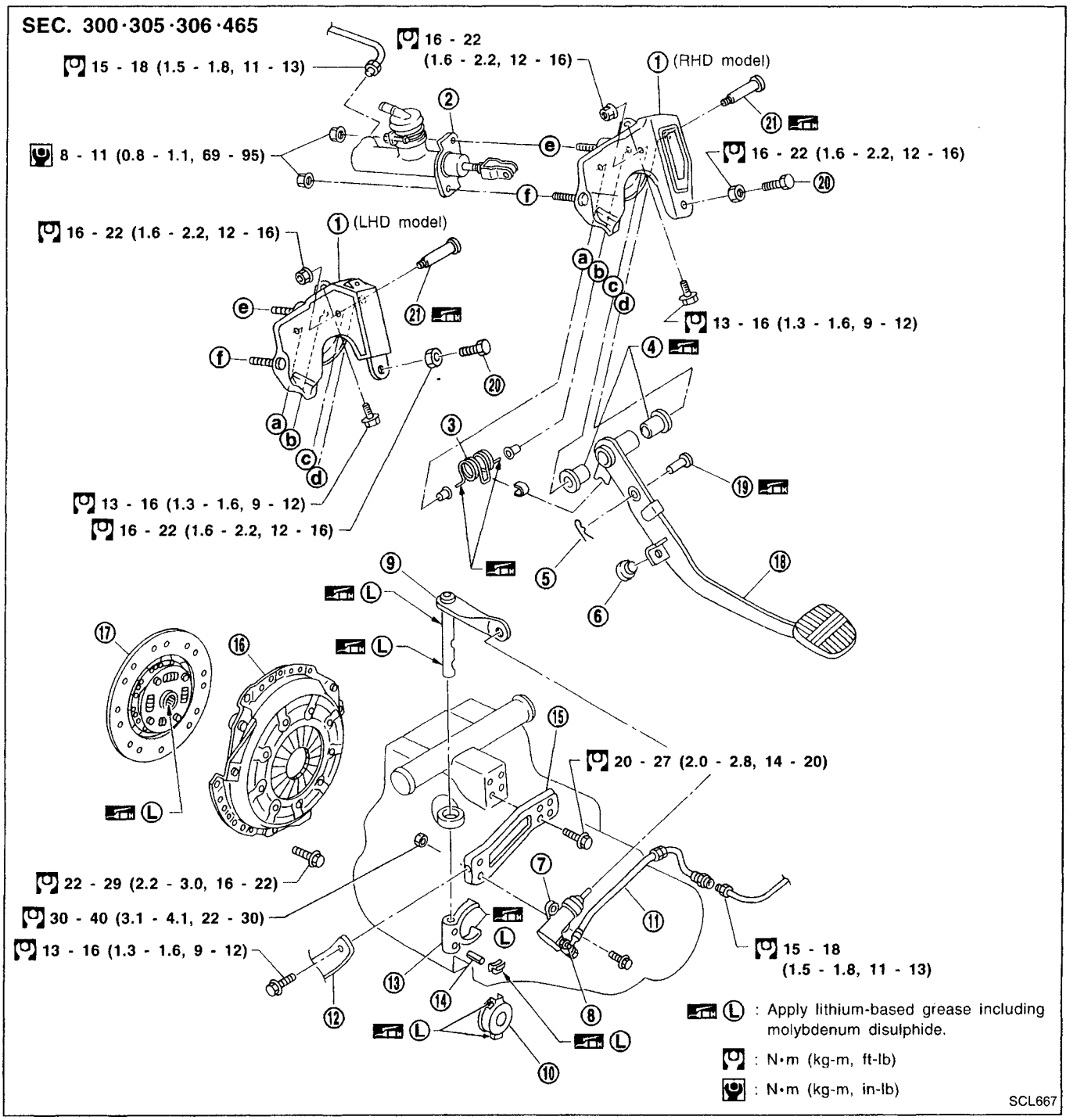

① Clutch pedal bracket
② Clutch master cylinder
③ Assist spring
④ Bushing
⑤ Pin
⑥ Stopper rubber
⑦ Operating cylinder
⑧ Air bleeder screw
⑨ Withdrawal lever
⑩ Release bearing
⑪ Clutch hose
⑫ Operating cylinder support bracket
⑬ Clutch lever
⑭ Spring pin
⑮ Operating cylinder bracket
⑯ Clutch cover
⑰ Clutch disc
⑱ Clutch pedal
⑲ Clevis pin
⑳ Pedal stopper
㉑ Fulcrum pin

CL

Simpo PDF Merge and Split Unregistered Version - http://www.simpopdf.com

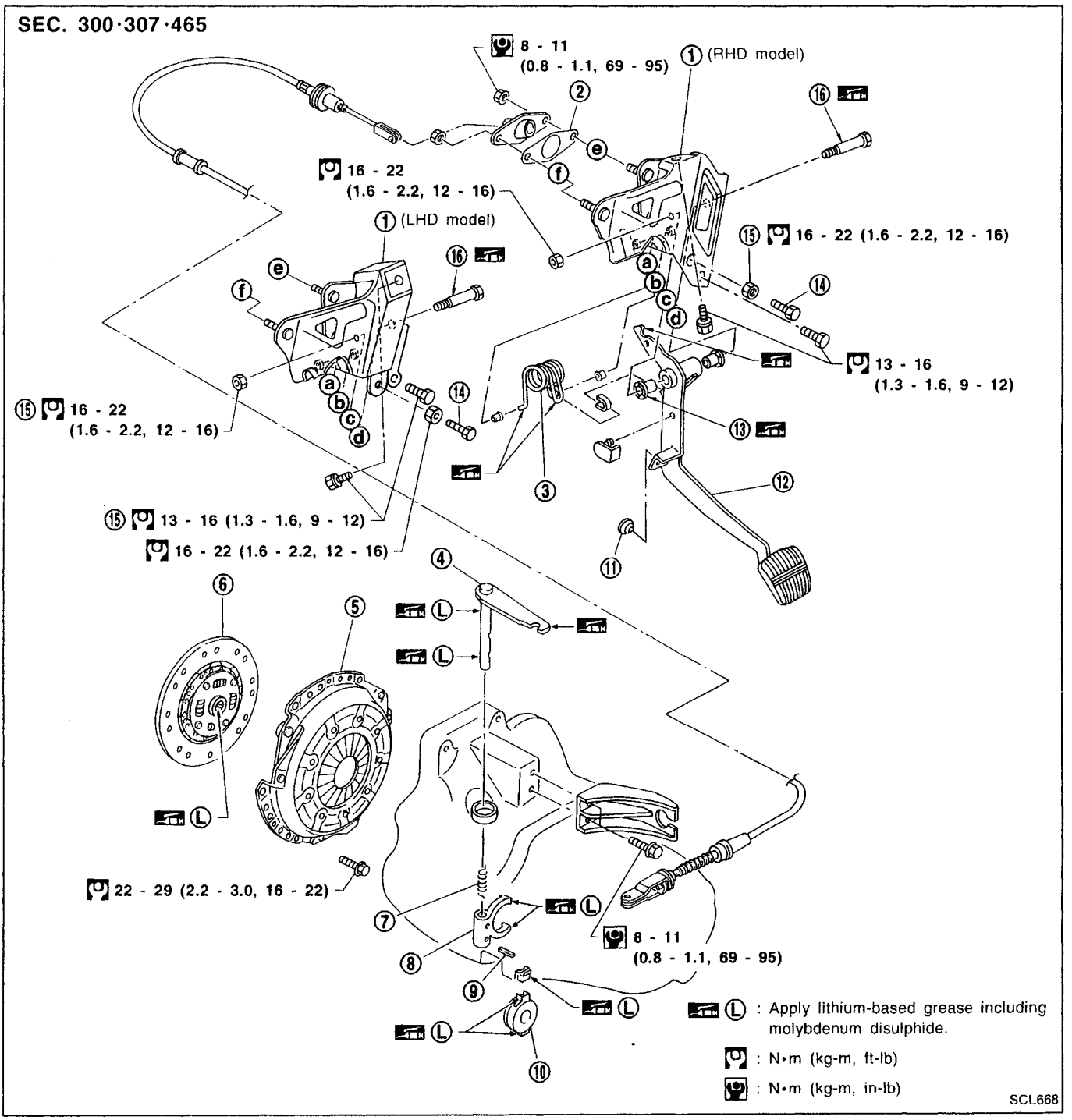

① Clutch pedal bracket
② Insulator
③ Assist spring
④ Withdrawal lever
⑤ Clutch cover
⑥ Clutch disc
⑦ Return spring
⑧ Clutch lever
⑨ Spring pin
⑩ Release bearing
⑪ Stopper rubber
⑫ Clutch pedal
⑬ Bushing
⑭ Pedal stopper
⑮ Lock nut
⑯ Fulcrum pin

Simpo PDF Merge and Split Unregistered Version - http://www.simpopdf.com

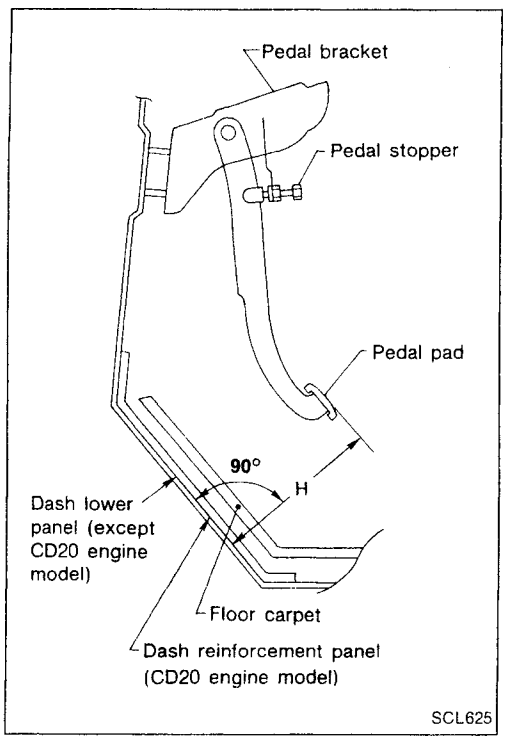

Adjusting Clutch Pedal

1. Adjust pedal height with pedal stopper.
   Pedal height "H":
   Refer to SDS, CL-14.

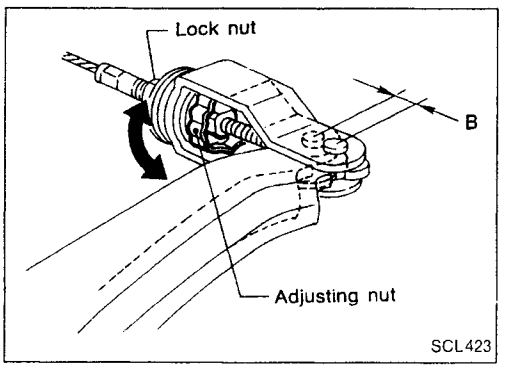

— For mechanical type —

2. Adjust withdrawal lever play "B" according to the following procedure.

a. Push withdrawal lever by hand until resistance is felt, and then tighten adjusting nut.

b. Turn back adjusting nut 2.5 to 3.5 turns, and then tighten lock nut.
   Withdrawal lever play "B":
   2.5 - 3.5 mm (0.098 - 0.138 in)
   Lock nut:
   : 3 - 4 N·m (0.3 - 0.4 kg-m, 26 - 35 in-lb)

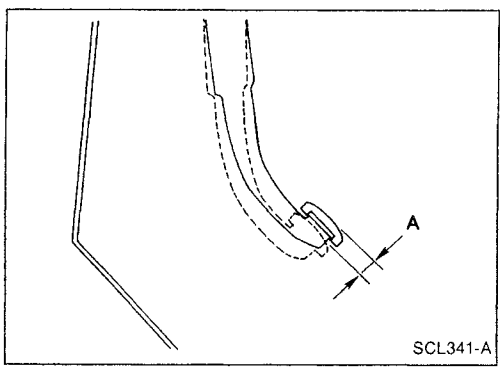

— For hydraulic type and mechanical type —

3. As a final check, measure pedal free travel "A" at center of pedal pad.
   Pedal free travel "A":
   Refer to SDS, CL-14.

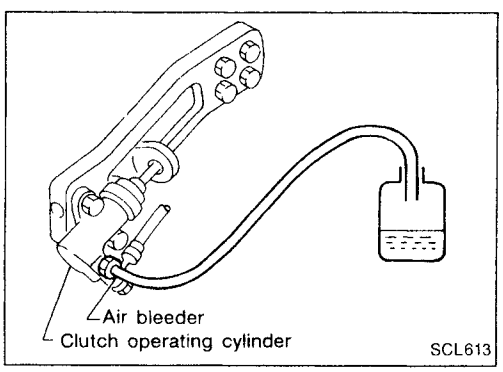

Bleeding Procedure — Hydraulic type

Bleed air according to the following procedure.

- **Carefully monitor fluid level at master cylinder during bleeding operation.**

1. Top up reservoir with recommended brake fluid.
2. Connect a transparent vinyl tube to air bleeder valve.
3. Fully depress clutch pedal several times.
4. With clutch pedal depressed, open bleeder valve to release air, then close bleeder valve.
5. Repeat steps 3 through 5 above until clear brake fluid comes out of air bleeder valve.

Simpo PDF Merge and Split Unregistered Version - http://www.simpopdf.com

Clutch Master Cylinder

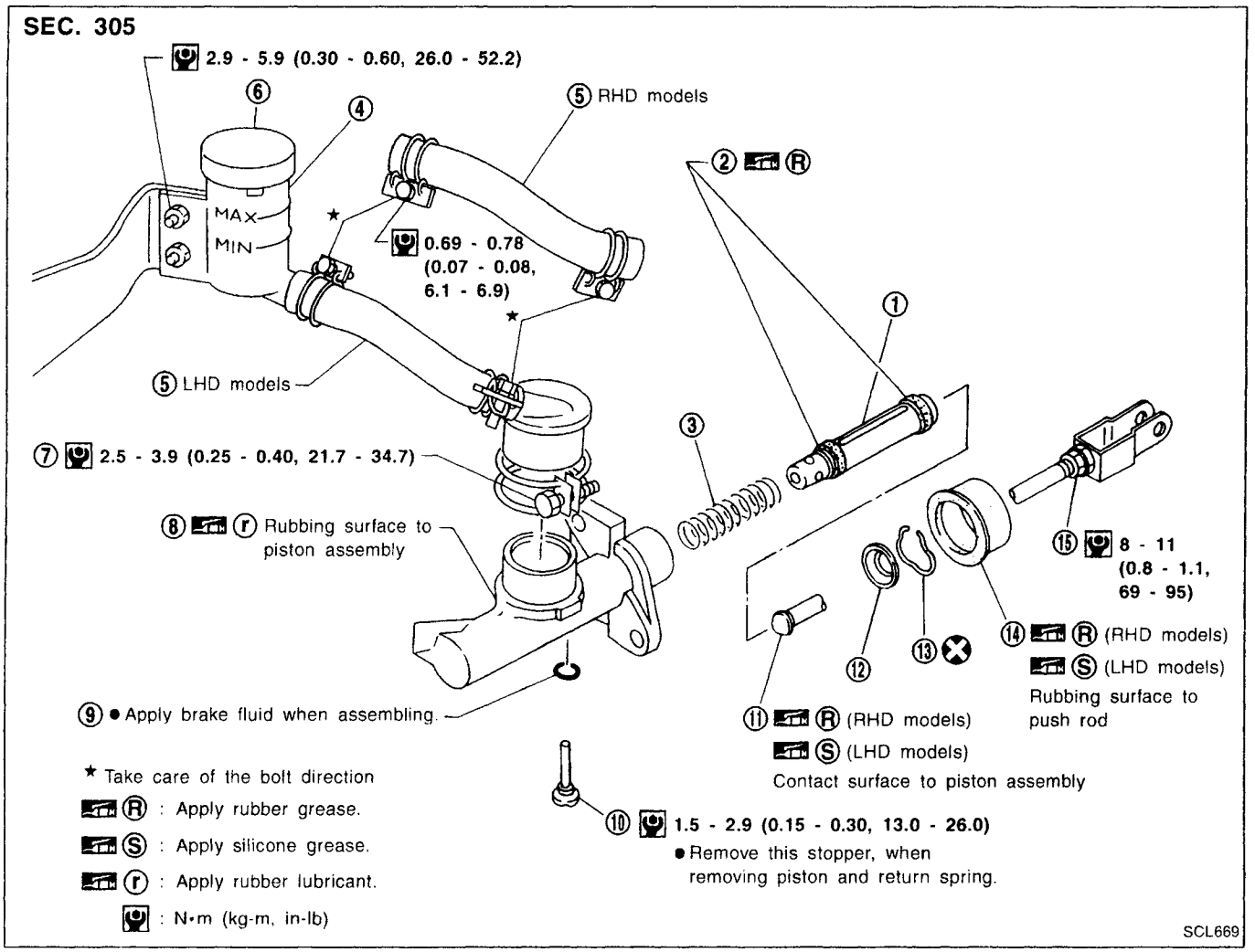

①	Piston assembly	⑥	Reservoir cap	⑪	Push rod
②	Piston cup	⑦	Reservoir band	⑫	Stopper
③	Return spring	⑧	Cylinder body	⑬	Stopper ring
④	Reservoir tank	⑨	Packing	⑭	Dust cover
⑤	Reservoir hose	⑩	Valve stopper	⑮	Lock nut

DISASSEMBLY AND ASSEMBLY

- Push piston into cylinder body with screwdriver when removing and installing valve stopper.

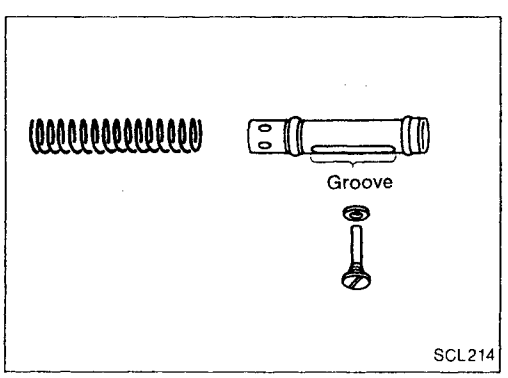

- Align groove of piston assembly and valve stopper when installing valve stopper.
- Check direction of piston cups.

Simpo PDF Merge and Split Unregistered Version - http://www.simpopdf.com

Clutch Master Cylinder (Cont'd)

INSPECTION

Check the following items, and replace if necessary.

- Rubbing surface of cylinder and piston, for uneven wear, rust or damage
- Piston with piston cup, for wear or damage
- Return spring, for wear or damage
- Dust cover, for cracks, deformation or damage
- Reservoir, for deformation or damage

Operating Cylinder

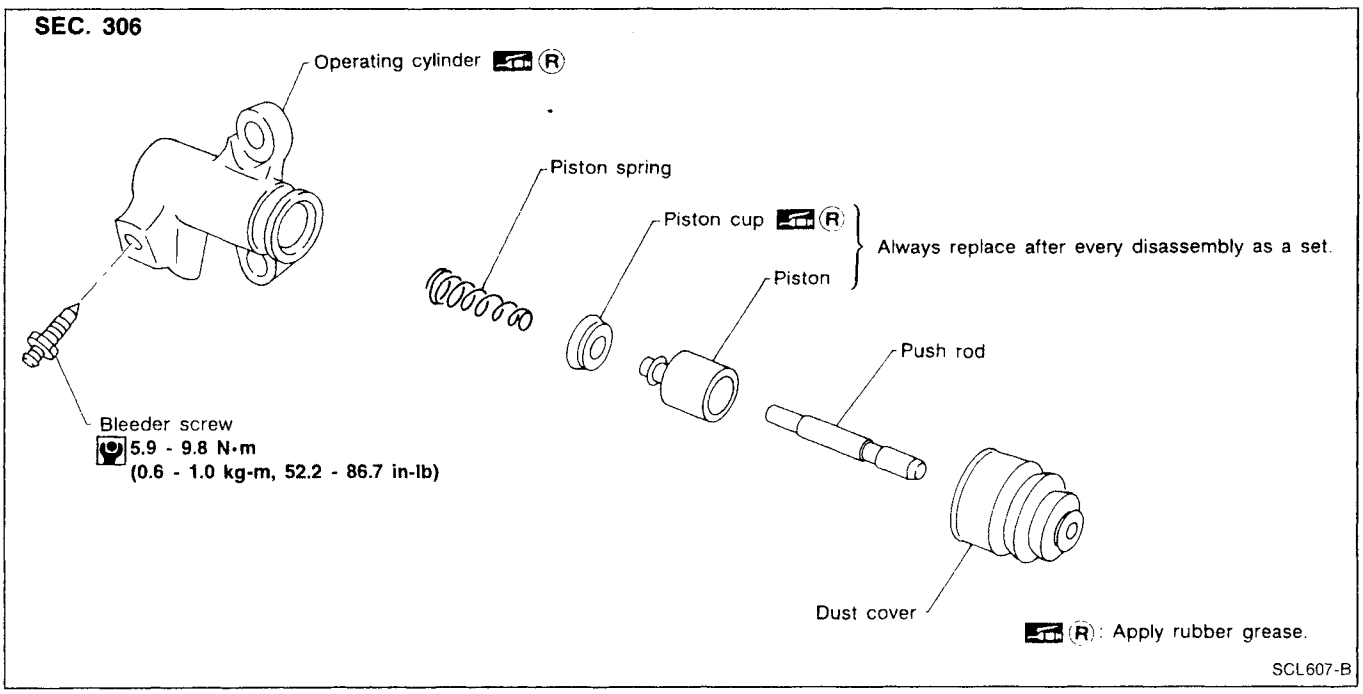

INSPECTION

Check the following items, and replace if necessary.

- Rubbing surface of cylinder and piston, for uneven wear, rust or damage
- Piston with piston cup, for wear or damage
- Piston spring, for wear or damage
- Dust cover, for cracks, deformation or damage

Simpo PDF Merge and Split Unregistered Version - http://www.simpopdf.com

Clutch Damper

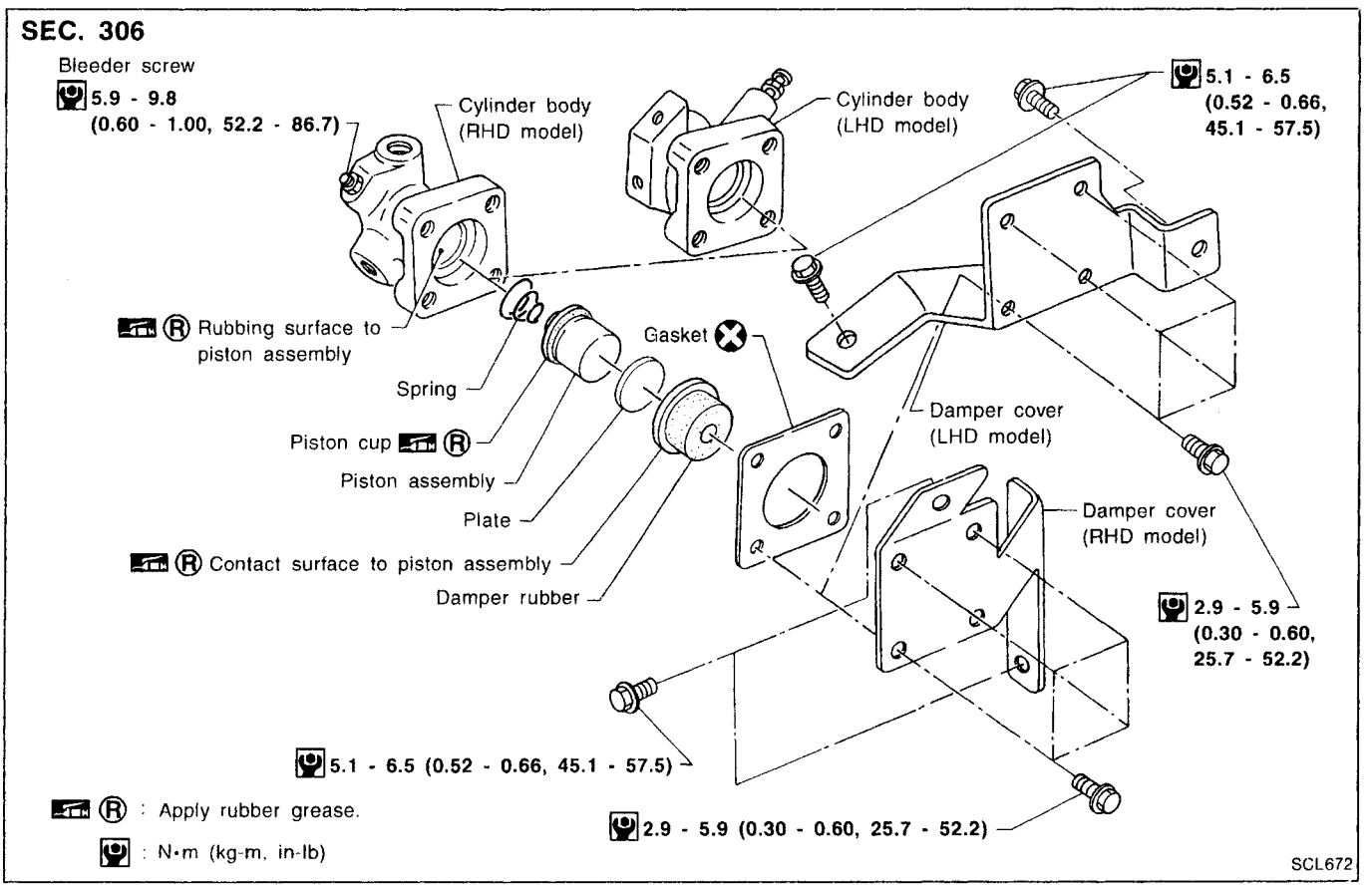

INSPECTION

- Check cylinder and piston rubbing surface for uneven wear, rust or damage. Replace if necessary.
- Check damper rubber and piston cup for cracks, deformation or damage. Replace if necessary.

Simpo PDF Merge and Split Unregistered Version - http://www.simpopdf.com

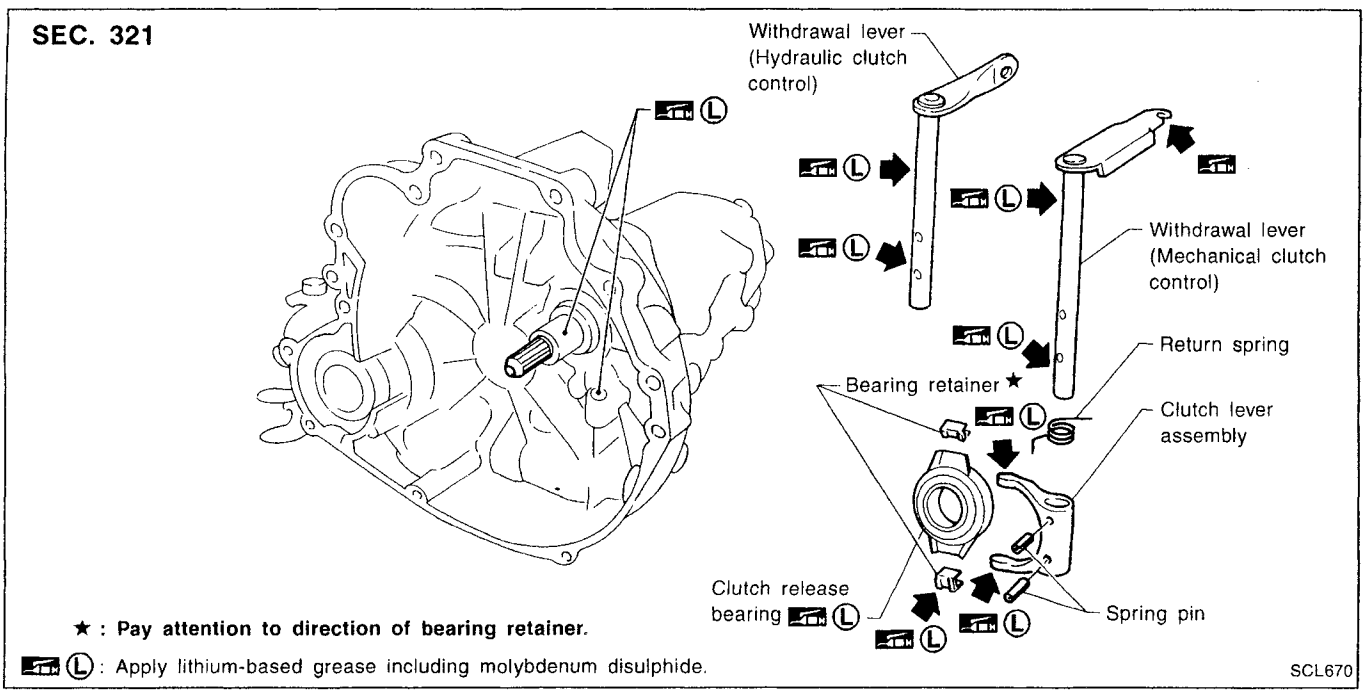

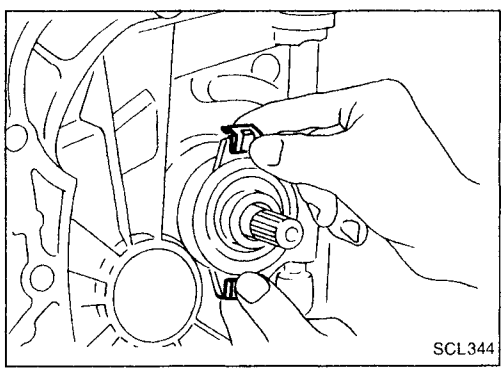

REMOVAL AND INSTALLATION

- Remove release bearing by pulling bearing retainers outward.

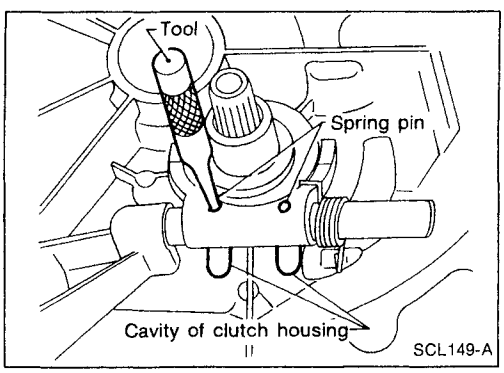

- Align spring pin with cavity of clutch housing and tap out spring pin.

INSPECTION

Check the following items, and replace if necessary.

- Release bearing, to see that it rolls freely and is free from noise, cracks, pitting or wear
- Release sleeve and withdrawal lever rubbing surface, for wear, rust or damage

Simpo PDF Merge and Split Unregistered Version - http://www.simpopdf.com

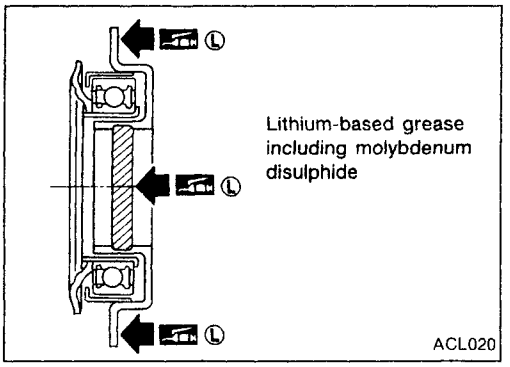

LUBRICATION

- Apply recommended grease to contact surface and rubbing surface.
- **Too much lubricant might damage clutch disc facing.**

Simpo PDF Merge and Split Unregistered Version - http://www.simpopdf.com

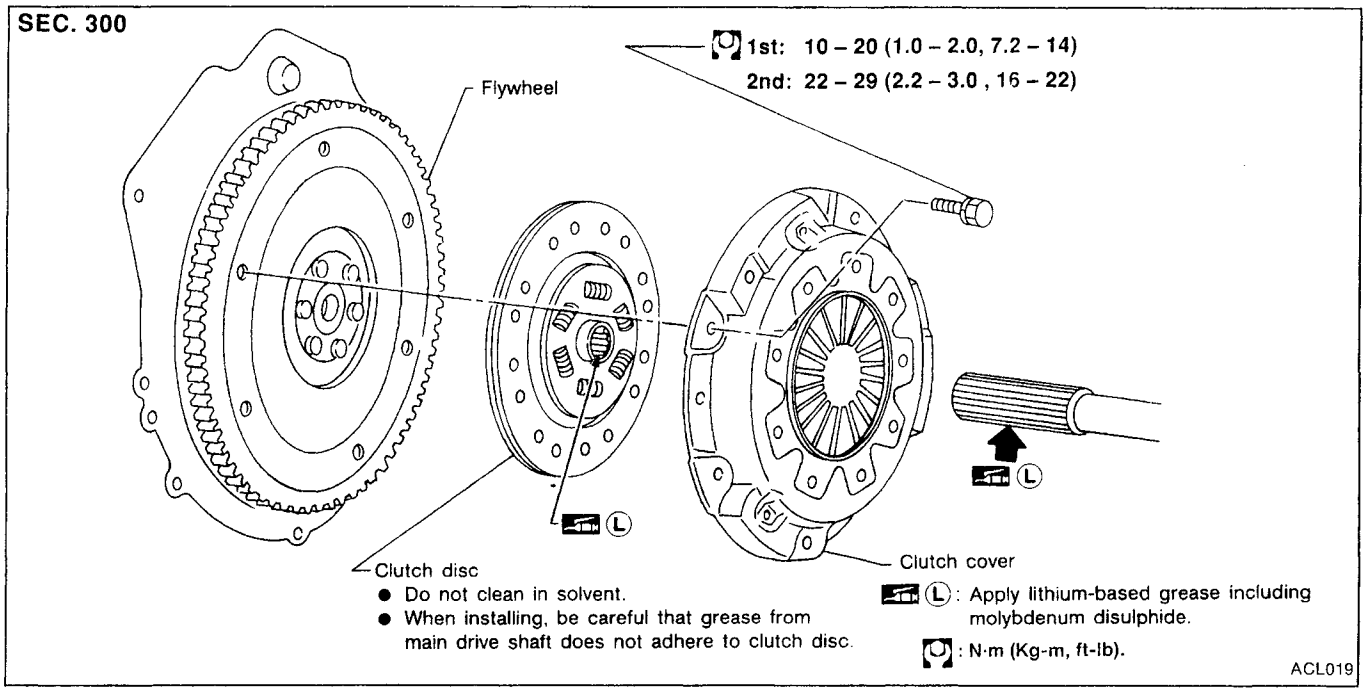

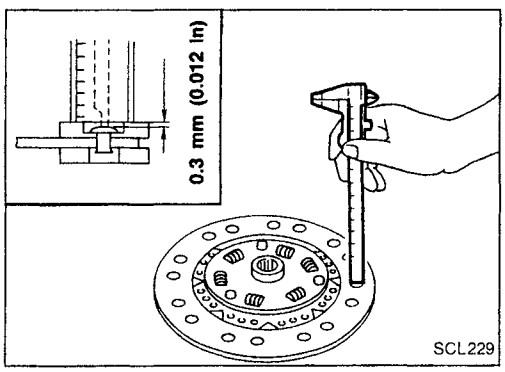

Clutch Disc

INSPECTION

Check the following items, and replace if necessary.

- Clutch disc, for burns, discoloration, oil or grease leakage
- Clutch disc, for wear of facing

  Wear limit of facing surface to rivet head:
  0.3 mm (0.012 in)

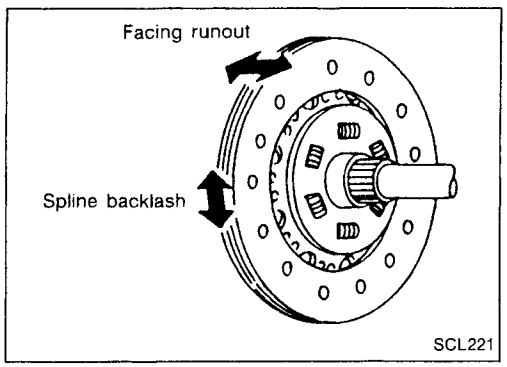

- Clutch disc, for backlash of spline and runout of facing.

  Maximum backlash of spline (at outer edge of disc):

Model 180	**0.7 mm (0.028 in)**
Model 190 and 200	**0.8 mm (0.031 in)**
Model 215	**0.9mm (0.035 in)**

  Runout limit:
  1.0 mm (0.039 in)

  Distance of runout check point (from hub center):

Model 180	**85 mm (3.35 in)**
Model 190	**90 mm (3.54 in)**
Model 200	**95 mm (3.74 in)**
Model 215	**102.5mm (4.04 in)**

Simpo PDF Merge and Split Unregistered Version - http://www.simpopdf.com

Clutch Disc (Cont'd)

INSTALLATION

- Apply recommended grease to contact surface of splines.
- **Too much lubricant may damage clutch disc facing.**

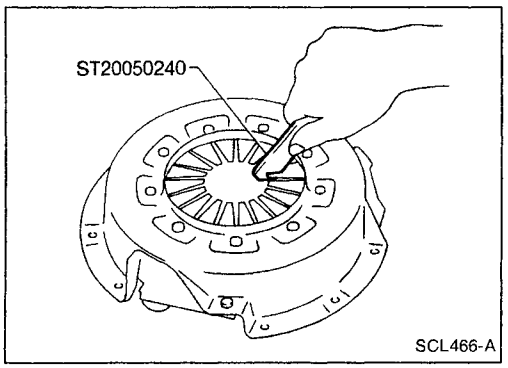

Clutch Cover and Flywheel

INSPECTION AND ADJUSTMENT

- Check clutch cover, installed on vehicle, for uneven diaphragm spring toe height.
  Uneven limit:

Model 180	**1.0 mm (0.039 in)**
Model 190, 200 and 215	**0.7 mm (0.028 in)**

- If out of limit, adjust the height with Tool.

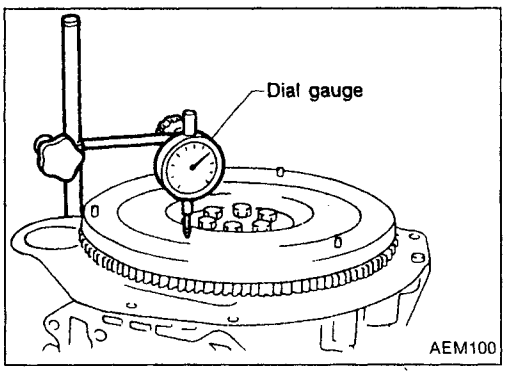

FLYWHEEL INSPECTION

CAUTION:
Do not allow any magnetic materials to contact the ring gear teeth.

- Inspect contact surface of flywheel for slight burns or discoloration. Clean flywheel with emery paper.
- Check flywheel runout.
  Maximum allowable runout:
  Refer to EM section ("Inspection", "CYLINDER BLOCK").

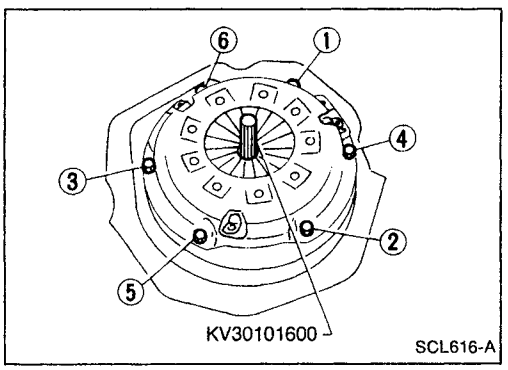

INSTALLATION

- Insert Tool into clutch disc hub when installing clutch cover and disc.
- Be careful not to allow grease to contaminate clutch facing.
- Tighten bolts in numerical order, in two steps.
  First step:
  : 10 - 20 N·m (1.0 - 2.0 kg-m, 7 - 14 ft-lb)
  Final step:
  : 22 - 29 N·m (2.2 - 3.0 kg-m, 16 - 22 ft-lb)

Simpo PDF Merge and Split Unregistered Version - http://www.simpopdf.com

General Specifications

CLUTCH CONTROL SYSTEM

Engine	Except for CD20	CD20
Type of clutch control	Mechanical	Hydraulic

CLUTCH DAMPER

Inner diameter	mm (in)	19.05 (3/4)

CLUTCH MASTER CYLINDER

Inner diameter	mm (in)	15.87 (5/8)

CLUTCH OPERATING CYLINDER

Inner diameter	mm (in)	17.46 (11/16)

CLUTCH DISC

Unit: mm (in)

Engine	GA14DE	GA15DE, GA16DE	CD20	SR20DE
Model	180	190	200	215
Facing size (Outer dia. x inner dia. x thickness)	180 x 125 x 3.5 (7.09 x 4.92 x 0.138)	190 x 132 x 3.5 (7.48 x 5.20 x 0.138)	200 x 130 x 3.5 (7.87 x 5.12 x 0.138)	215 x 140 x 3.5 (8.46 x 5.51 x 0.138)
Thickness of disc assembly with load	8.0 - 8.4 (0.315 - 0.331) with 3,923 N (400 kg, A2 lb)			7.6 - 8.0 (0.299 - 0.315) with 3,923 N (400 kg, 882 lb)

CLUTCH COVER

Engine	GA14DE	GA15DE	GA16DE	CD20	SR20DE
Model	180	190		200	215
Full-load N (kg, lb)	3,236 (330, 728)	3,432 (350, 772)	3,825 (390, 860)	3,481 (355, 783)	4,413 (450, 992)

Simpo PDF Merge and Split Unregistered Version - http://www.simpopdf.com

Inspection and Adjustment

CLUTCH PEDAL

Unit: mm (in)

Applied model	Except for CD20 engine models		CD20 engine models	
	RHD	LHD	RHD	LHD
Pedal height "H"	159 - 169 (6.26 - 6.65)*1	153 - 163 (6.02 - 6.42)*2	156 - 166 (6.14 - 6.54)*1	149 - 159 (5.87 - 6.26)*2
Pedal free travel "A" (at pedal pad)	11 - 15 (0.43 - 0.59)		9 - 16 (0.35 - 0.63)	
Withdrawal lever play "B"	2.5 - 3.5 (0.098 - 0.138)		—	

*1: Measured from surface of dash reinforcement panel to surface of pedal pad.
*2: Measured from surface of dash lower panel to surface of pedal pad.

CLUTCH DISC

Unit: mm (in)

Disc model	180	190	200	215
Wear limit of facing surface to rivet head	0.3 (0.012)			
Runout limit of facing	1.0 (0.039)			
Distance of runout check point (from hub center)	85 (3.35)	90 (3.54)	95 (3.74)	102.5 (4.04)
Maximum backlash of spline (at outer edge of disc)	0.7 (0.028)	0.8 (0.031)		0.9 (0.035)

CLUTCH COVER

Unit: mm (in)

Cover model	180	190	200	215
Uneven limit of diaphragm spring toe height	1.0 (0.039)	0.7 (0.028)		

Simpo PDF Merge and Split Unregistered Version - http://www.simpopdf.com

CONTENTS

GENERAL INFORMATION ····1
Identification Number ····2
BODY COMPONENT PARTS ····3
Underbody Component Parts ····3
Body Component Parts ····4
CORROSION PROTECTION ····7
Description ····7
Anti-Corrosive Wax ····8
Undercoating ····9
Stone Guard Coat ····10
BODY CONSTRUCTION ····11
Body Construction ····11
BODY ALIGNMENT ····13
Body Center Marks ····13
Panel Parts Matching Marks ····14
Description ····15
Engine Compartment ····16
Underbody ····17
Passenger Compartment (Sedan·5-door Hatchback) ····19
Rear Body (Sedan) ····21
Passenger Compartment (3-door Hatchback) ····22
Rear Body (3-door Hatchback·5-door Hatchback) ····24
HANDLING PRECAUTIONS FOR PLASTICS ····25
Handling Precautions for Plastics ····25
Location of Plastic Parts ····26
PRECAUTIONS ····28
Precautions For Handling High Strength Steel (HSS) ····28
REPLACEMENT OPERATIONS ····32
Description ····32
Radiator Core Support (Partial Replacement) ····33
Hoodledge (Partial Replacement) ····34
Front Side Member (Partial Replacement) ····35
Front Pillar ····36
Center Pillar (Sedan ·5-door Hatchback) ····37
Outer Sill (Sedan ·5-door Hatchback) ····38
Outer Sill (3-door Hatchback) ····39
Rear Fender (Sedan) ····40
Rear Fender (5-door Hatchback) ····41
Rear Fender (3-door Hatchback) ····42
Rear Floor Rear ····43
Rear Side Member Extension (Sedan) ····44
Rear Side Member Extension (3-door and 5-door Hatchback) ····45

Simpo PDF Merge and Split Unregistered Version - http://www.simpopdf.com

Identification Number

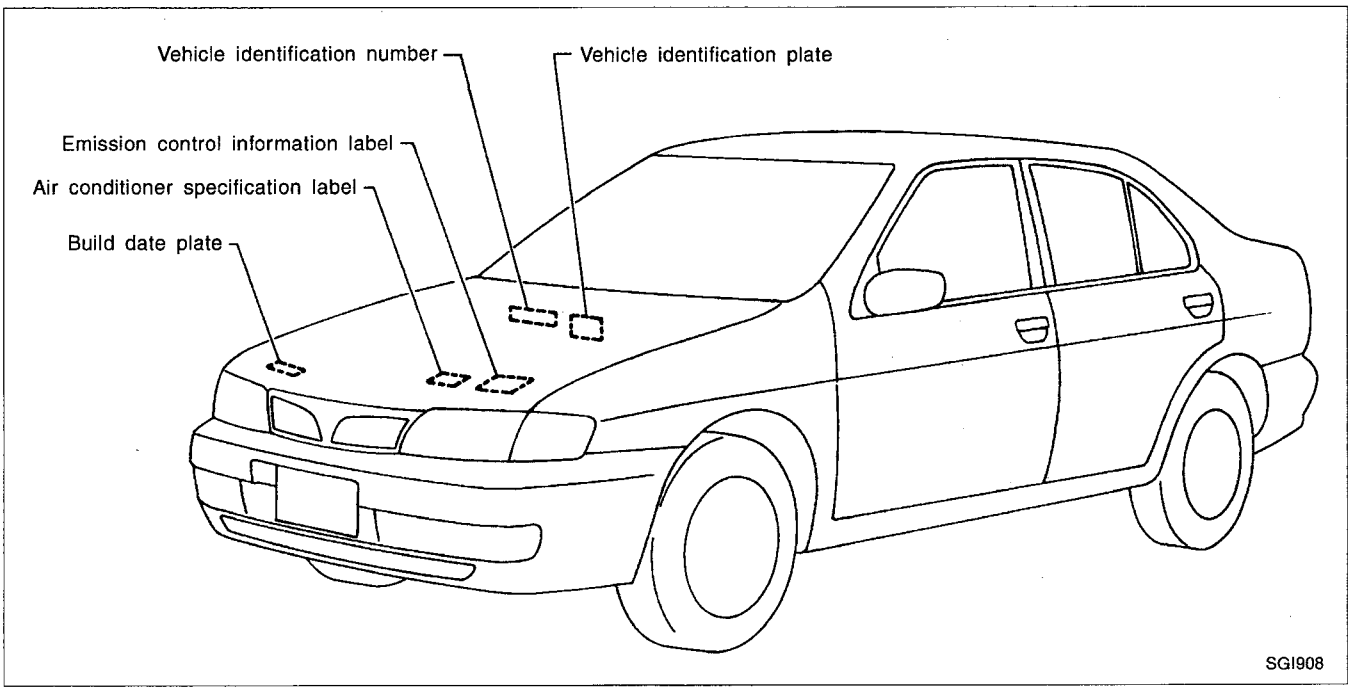

VEHICLE IDENTIFICATION NUMBER ARRANGEMENT

For Europe

JN1 B A A N15 U O XXXXXX

- JN1: Manufacturer — JN1: Nissan, Passenger vehicle
- B: Body type — B: 4-door Sedan; F: 5-door Hatchback; E: 3-door Hatchback
- A: Engine type — A: GA14DE engine; C: GA16DE engine; E: SR20DE engine; F: CD20 engine
- A: Model — A: 2-wheel drive
- N15: Model
- U: Destination — U: Europe
- O: Stopgap (no meaning)
- XXXXXX: Vehicle serial number

Identification Number (Cont'd)

Except for Europe

JN1 B C A N15 A O XXXXXX

- XXXXXX: Vehicle serial number
- O: Stopgap (no meaning)
- A: Destination
  - A: Australia and New Zealand
  - Z: Except for Europe, Australia, and New Zealand
- N15: Model
- A: 2-wheel drive
- C: Engine type
  - B: GA15DE engine
  - C: GA16DE engine
  - E: SR20DE engine-For Australia and New Zealand only
- B: Body type
  - B: 4-door Sedan
  - F: 5-door Hatchback
- JN1: Manufacturer
  - JN1: Nissan, Passenger vehicle

VEHICLE IDENTIFICATION PLATE

Europe

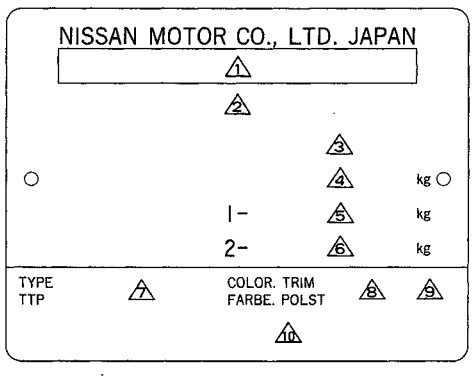

Expect Europe

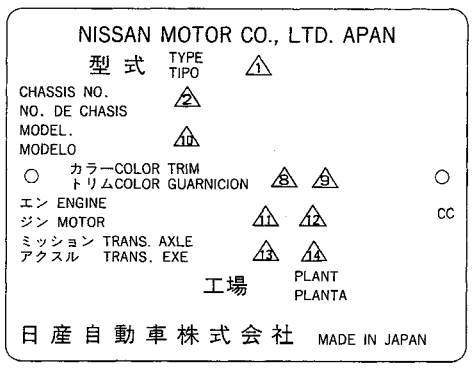

1 Type approval number
2 Vehicle identification number(Chassis number)
3 Gross vehicle weight
4 Gross combination weight
Gross vehicle weight + Gross trailing capacity (Weight)
5 Gross axle weight(Front)
6 Gross axle weight(Rear)
7 Type approval number
8 Body color code
9 Trim color code
10 Model Specification No.
11 Engine model
12 Engine displacement
13 Transaxle model
14 Axle model

Simpo PDF Merge and Split Unregistered Version - http://www.simpopdf.com

: Indicates two-side anti-corrosive precoated steel portions.
: Indicates high strength steel (HSS) portions.
: Indicates two-side anti-corrosive steel and HSS portions.

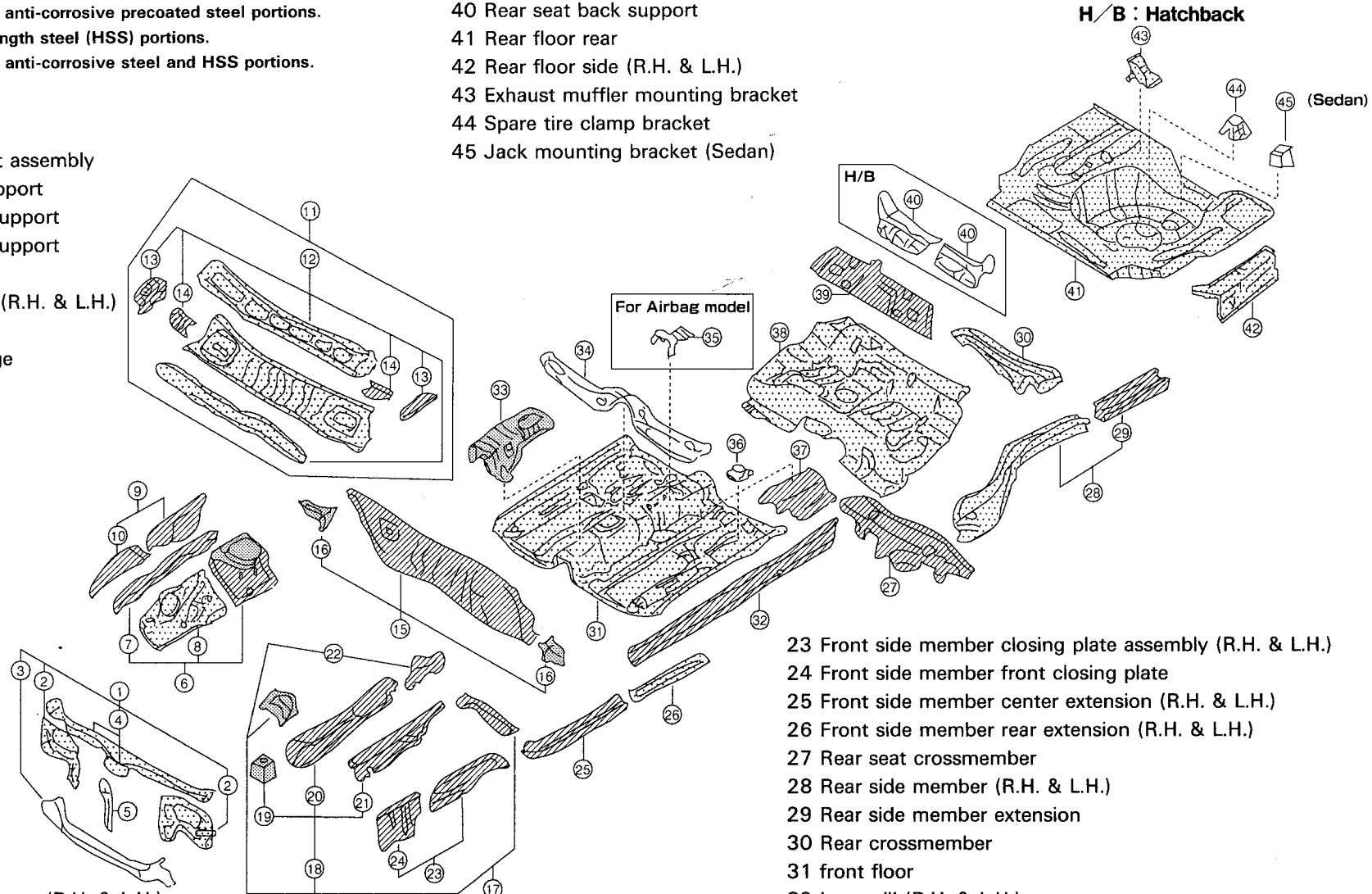

1 Radiator core support assembly
2 Side radiator core support
3 Lower radiator core support
4 Upper radiator core support
5 Hood lock stay
6 Hoodledge assembly (R.H. & L.H.)
7 Upper hoodledge
8 Lower front hoodledge
9 Hoodledge reinforcement (R.H. & L.H.)
10 Front hoodledge reinforcement
11 Air box assembly
12 Cawl top assembly
13 Side cowl top
14 Side cowl top brace
15 Lower dash assembly
16 Lower dash patch
17 Front side member assembly 1 (R.H. & L.H.)
18 Front side member assembly 2
19 Bumper stay reinforcement
20 Front side member
21 Front side member reinforecement
22 Front suspension mounting bracket
23 Front side member closing plate assembly (R.H. & L.H.)
24 Front side member front closing plate
25 Front side member center extension (R.H. & L.H.)
26 Front side member rear extension (R.H. & L.H.)
27 Rear seat crossmember
28 Rear side member (R.H. & L.H.)
29 Rear side member extension
30 Rear crossmember
31 front floor
32 Inner sill (R.H. & L.H.)
33 Transmission control reinforcement
34 2nd crossmember
35 Airbag sensor bracket
36 Front seat mounting bracket
37 Hand brake & seat belt reinforcement
38 Rear floor front
39 Rear seat belt anchor reinforcement
40 Rear seat back support
41 Rear floor rear
42 Rear floor side (R.H. & L.H.)
43 Exhaust muffler mounting bracket
44 Spare tire clamp bracket
45 Jack mounting bracket (Sedan)

Body Component Parts

Sedan
5-door Hatchback

5D H/B: 5-door Hatchback

: Indicates two-side anti-corrosive precoated steel portions.
: Indicates high strength steel (HSS) portions
: Indicates two-side anti-corrosive steel and HSS portions.

Simpo PDF Merge and Split Unregistered Version - http://www.simpopdf.com

Body Component Parts

Sedan
5-door Hatchback

1 Hood
2 Front fender (R.H. & L.H.)
3 Front fender bracket
4 Front pillar assembly (R.H. & L.H.)
5 Lower front pillar reinforcement
6 Inner side roof rail (R.H. & L.H.)
7 Front roof rail brace
8 Outer side roof rail (R.H. & L.H.)
9 Inner center pillar assembly (R.H. & L.H.)
10 Upper inner center pillar
11 Lower inner center pillar
12 Outer center pillar (R.H. & L.H.)
13 Outer sill (R.H. & L.H.)
14 Roof assembly
15 Front roof rail
16 No.3 roof bow
17 No.4 roof bow
18 No.5 roof bow
19 Rear roof bow
20 No.2 roof bow
21 Front roof bow
22 Rear seat back support
23 Inner rear pillar (R.H. & L.H.)
24 Side parcel shelf
25 Rear pillar patch
26 Rear pillar reinforcement
27 Inner rear wheelhouse (R.H. & L.H.)
28 Outer rear wheelhouse (R.H. & L.H.)
29 Front door assembly (R.H. & L.H.)
30 Outer front door panel
31 Rear door assembly (R.H. & L.H.)
32 Outer rear door panel
33 Rear fender assembly (R.H. & L.H.)
34 Rear fender extension
35 Retainer striker
36 Fuel filler lid
37 Parcel shelf with rear waist
38 Rear panel
39 Trunk lid
40 Back door

: Indicates two-side anti-corrosive precoated steel portions.
: Indicates high strength steel (HSS) portions
: Indicates two-side anti-corrosive steel and HSS portions.

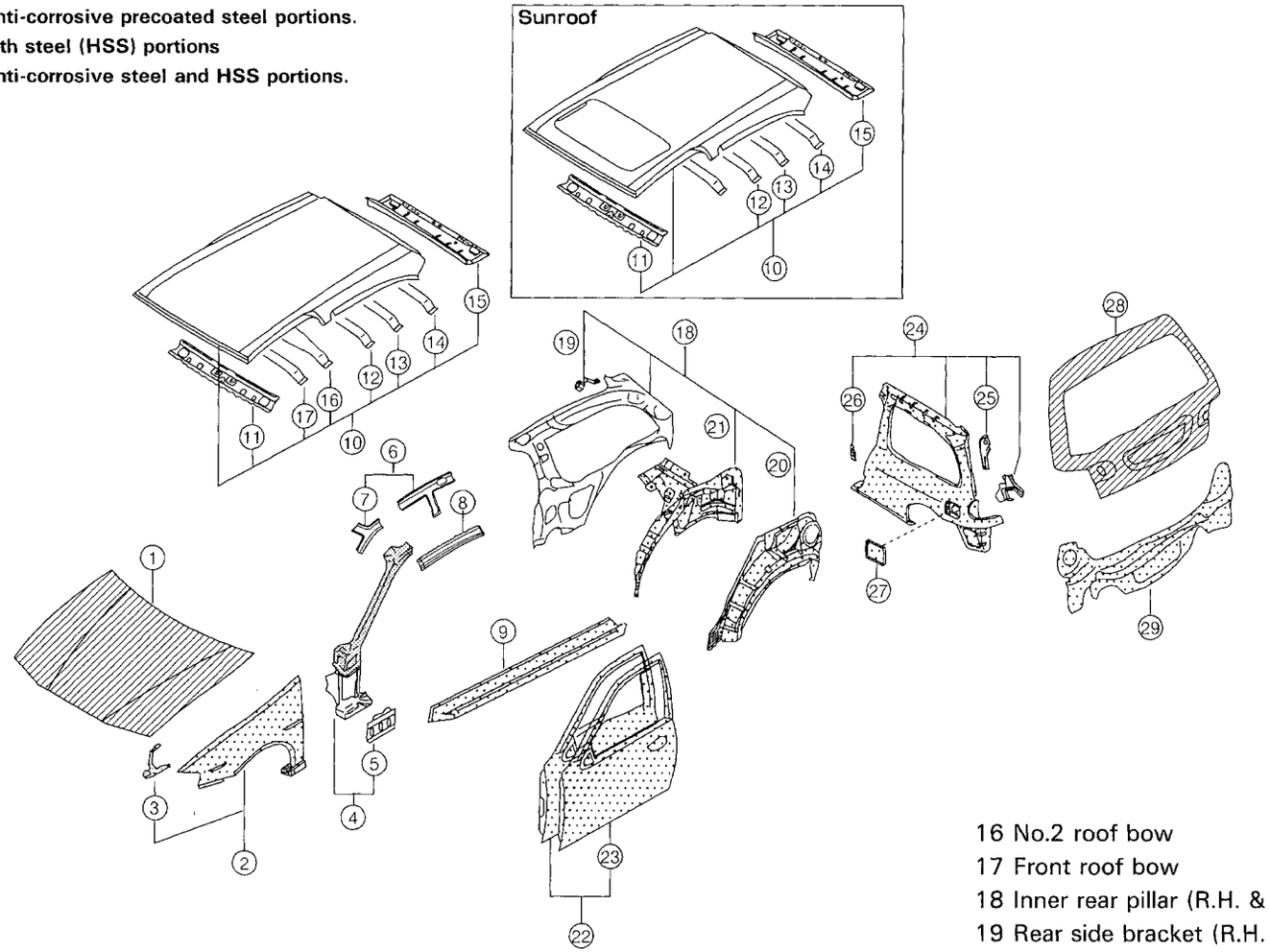

1 Hood
2 Front fender (R.H. & L.H.)
3 Front fender bracket
4 Front pillar assembly (R.H. & L.H.)
5 Lower front pillar reinforcement
6 Inner side roof rail (R.H. & L.H.)
7 Front roof rail brace
8 Outer side roof rail (R.H. & L.H.)
9 Outer sill (R.H. & L.H.)
10 Roof assembly
11 Front roof rail
12 No.3 roof bow
13 No.4 roof bow
14 No.5 roof bow
15 Rear roof bow
16 No.2 roof bow
17 Front roof bow
18 Inner rear pillar (R.H. & L.H.)
19 Rear side bracket (R.H. & L.H.)
20 Outer rear wheelhouse (R.H. & L.H.)
21 Inner rear wheelhouse (R.H. & L.H.)
22 Front door assembly (R.H. & L.H.)
23 Outer front door panel (R.H. & L.H.)
24 Rear fender assembly (R.H. & L.H.)
25 Rear fender extension (R.H. & L.H.)
26 Retainer striker (R.H. & L.H.)
27 Fuel filler lid
28 Back door
29 Rear panel

Simpo PDF Merge and Split Unregistered Version - http://www.simpopdf.com

Description

To provide improved corrosion prevention, the following anti-corrosive measures have been implemented in our production plants. When repairing or replacing body panels, it is necessary to use these same anti-corrosive measures.

ANTI-CORROSIVE PRECOATED STEEL (DURASTEEL)

To improve repairability and corrosion resistance, a new type of anti-corrosive precoated steel sheets have been adopted taking the place of conventional zinc-coated steel sheets.
This durasteel is electroplated, zinc-nickel alloy under organic film, which provides excellent corrosion resistance.

Durasteel is classified as either one-side precoated steel or two-side precoated steel. The two side precoated steel provides excellent corrosion resistance.

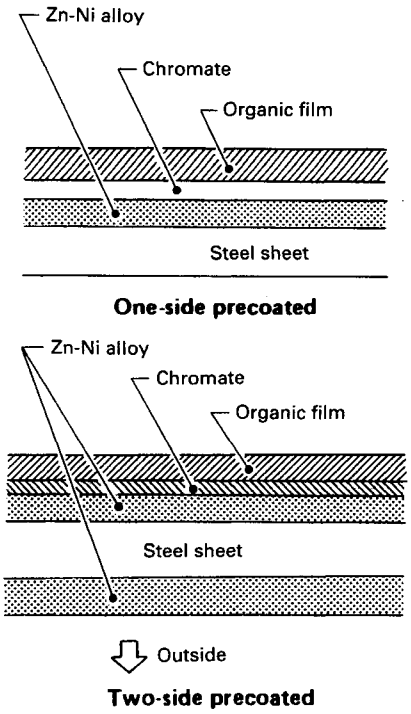

Nissan Genuine Service Parts are fabricated from durasteel sheets. Therefore, it is recommended that GENUINE NISSAN PARTS be used for panel replacement to maintain the anti-corrosive performance built into the vehicle at the factory.

PHOSPHATE COATING TREATMENT AND CATIONIC ELECTRODEPOSITION PRIMER

A phosphate coating treatment and a cationic electrodeposition primer, which provide an excellent anti-corrosion effect, are employed on all body components.
Caution:
Confine paint removal in the welding operation to the absolute minimum.

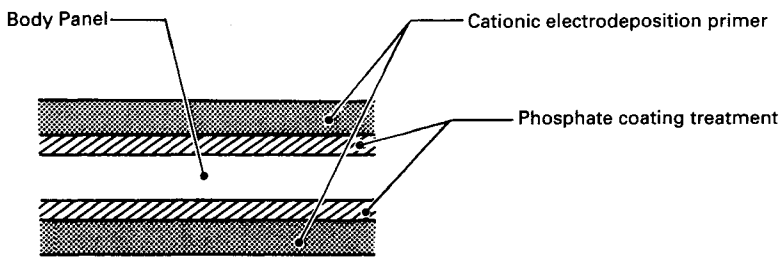

Nissan Genuine Service Parts also are treated in the same manner. Therefore, it is recommended that GENUINE NISSAN PARTS be used for panel replacement to maintain anti-corrosive performance built into the vehicle at the factory.

Anti-corrosive Wax

To improve corrosion resistance, anti-corrosive wax is applied inside the body sill and inside other closed sections. Accordingly, when replacing these parts, be sure to apply anti-corrosive wax to the appropriate areas of the new parts. Select an excellent anti-corrosive wax which will penetrate after application and has a long shelf life.

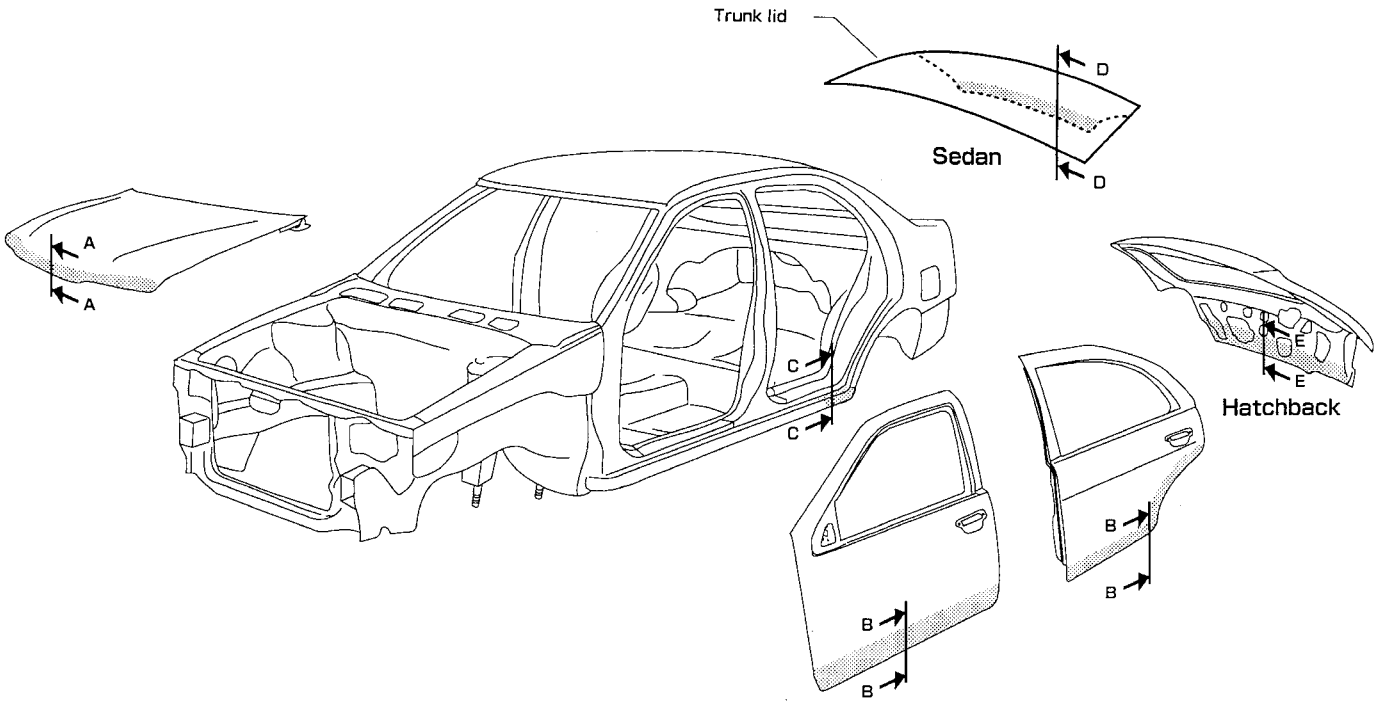

: Indicates anti-corrosive wax coated portions.

Section A-A:	Section B-B:	Section C-C:
	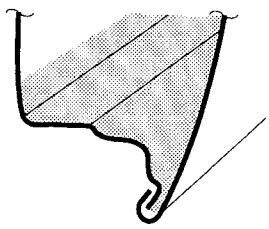	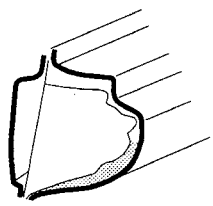
Section D-D: SEDAN	**Section E-E: Hatchback**	
For Australia model 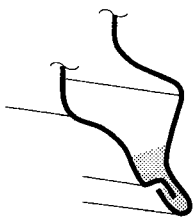	For Australia model 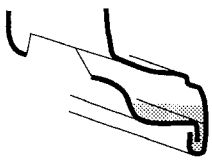	

Simpo PDF Merge and Split Unregistered Version - http://www.simpopdf.com

Undercoating

The undersides of the floor and wheelhouse are undercoated to prevent rust, vibration, noise and stone chipping.
Therefore, when such a panel is replaced or repaired, apply undercoating to that part. Use an undercoating with the following properties: rust preventive, soundproof, vibration-proof, shock-resistant, adhesive, and durable.

Precautions in undercoating

1. Do not apply undercoating to any place unless specified (such as the areas above the muffler and catalytic converter which are subjected to heat).
2. Do not undercoat the exhaust pipe, other parts which become hot, and rotary parts.
3. Apply bitumen wax after applying undercoating.

: **Indicates undercoated portions**

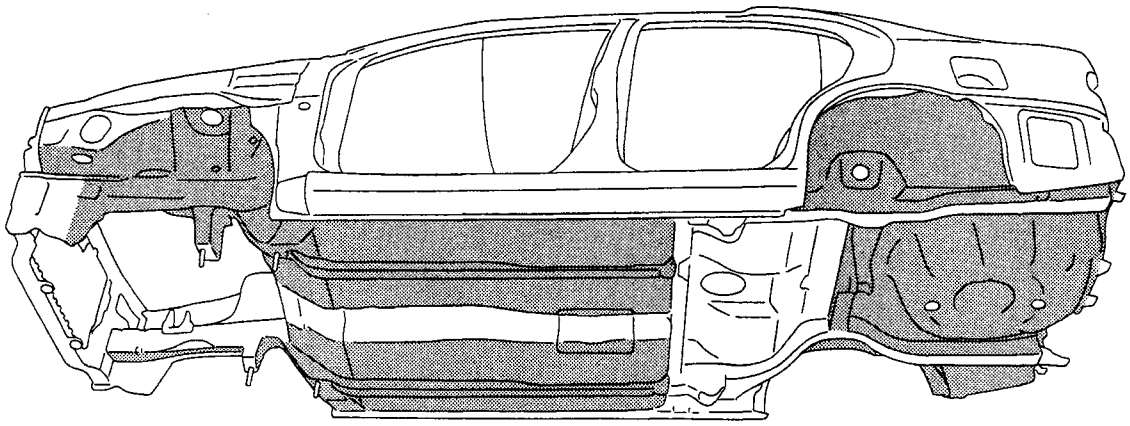

Stone Guard Coat

To prevent damage caused by stones, the lower outer body panels (fender, door, etc.) have an additional layer of Stone Guard Coat over the ED primer coating. Thus, when replacing or repairing these panels, apply undercoat to the same portions as before. Use a coat which is rust preventive, durable, shockresistant and has a long shelf life.

: **Indicates stone guard coated portions**

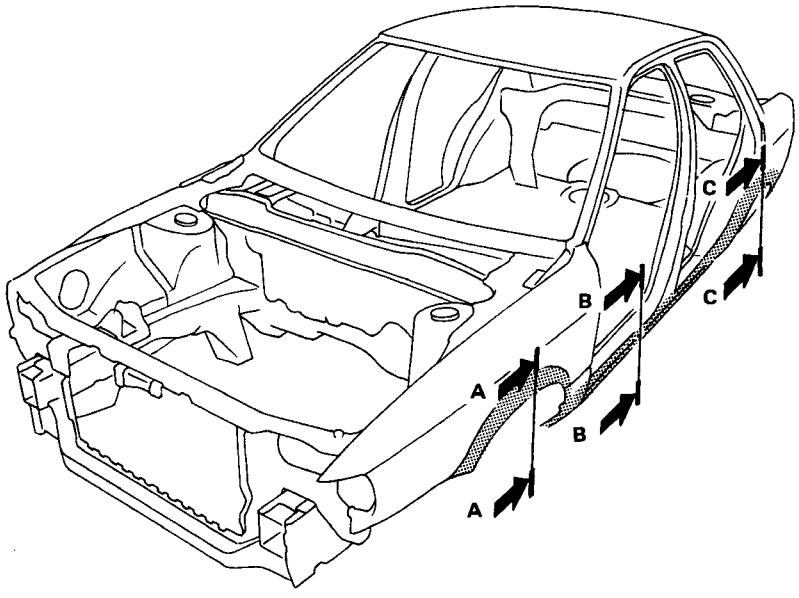

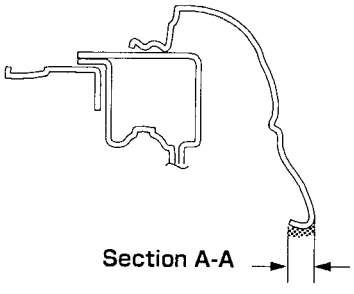

Section A-A

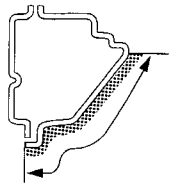

Section B-B

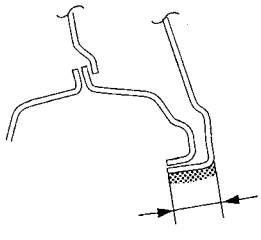

Section C-C

Simpo PDF Merge and Split Unregistered Version - http://www.simpopdf.com

Body Construction

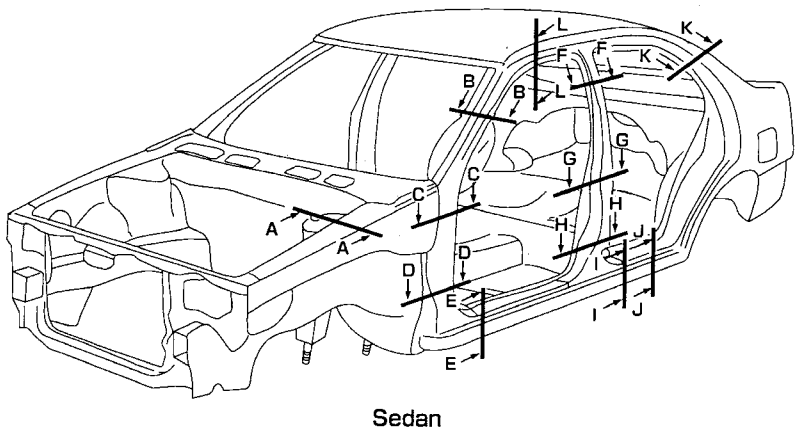

Sedan

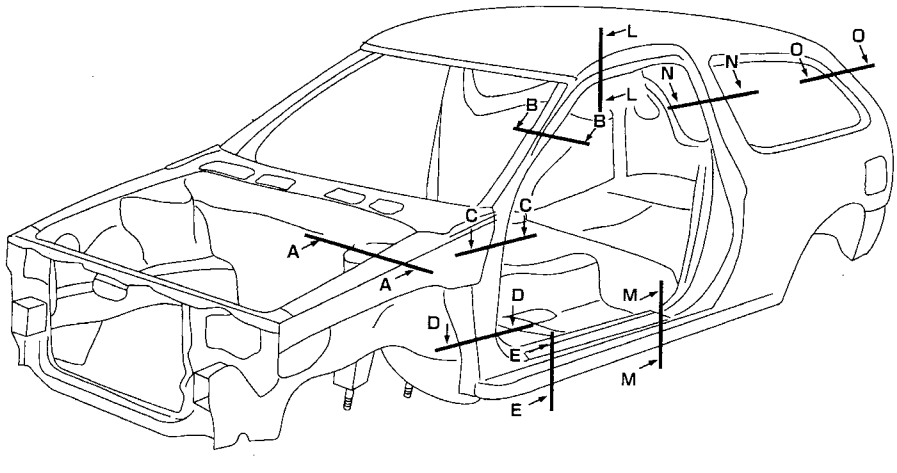

3-door Hatchback

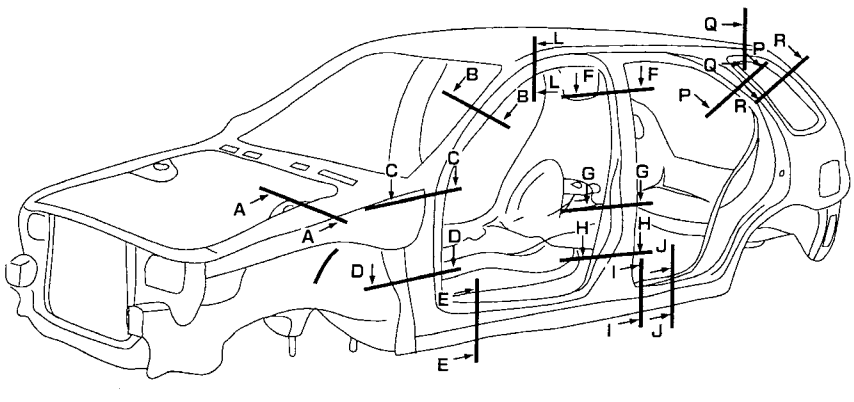

5-door Hatchback

Body Construction

Section A-A:	Section B-B:	Section C-C:	Section D-D:
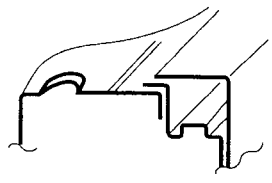	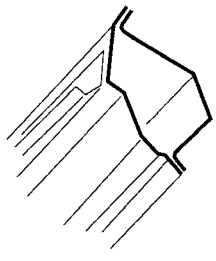	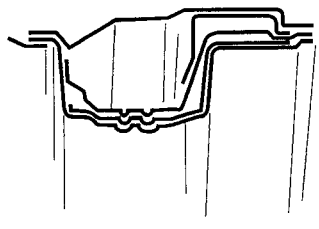	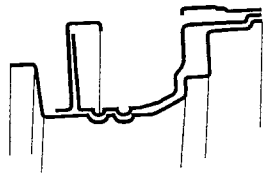
Section E-E:	**Section F-F:**	**Section G-G:**	**Section H-H:**
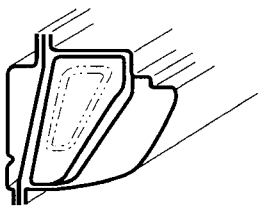	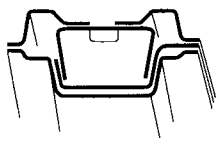	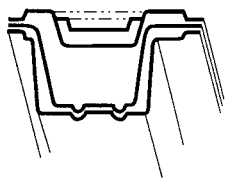	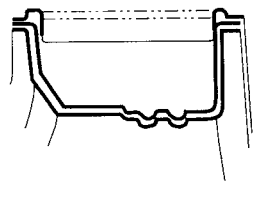
Section I-I:	**Section J-J:**	**Section K-K:**	**Section L-L:**
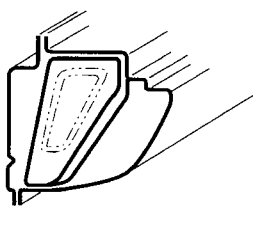	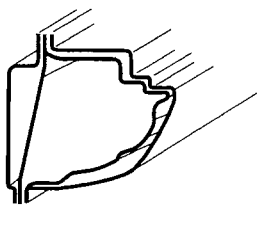	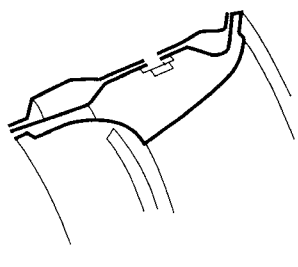	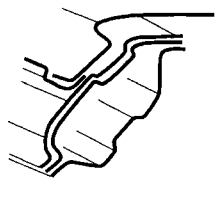
Section M-M:	**Section N-N:**	**Section O-O:**	**Section P-P:**
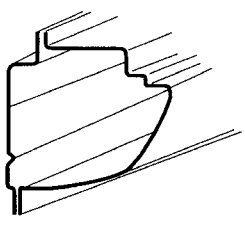	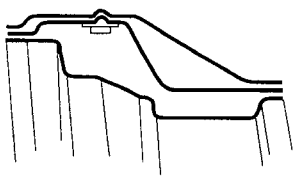	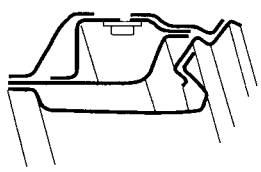	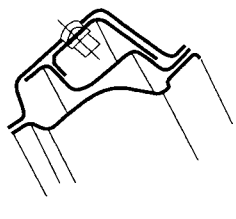
Section Q-Q:	**Section R-R:**		
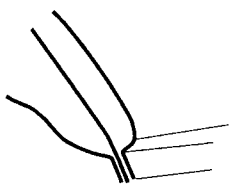	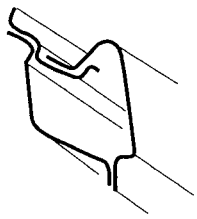		

Simpo PDF Merge and Split Unregistered Version - http://www.simpopdf.com

Body Center Marks

A mark has been placed on each part of the body to indicate the vehicle center. When repairing parts damaged by an accident which might affect the vehicle frame (members, pillars, etc.) more accurate, effective repair will be possible by using these marks together with body alignment data.

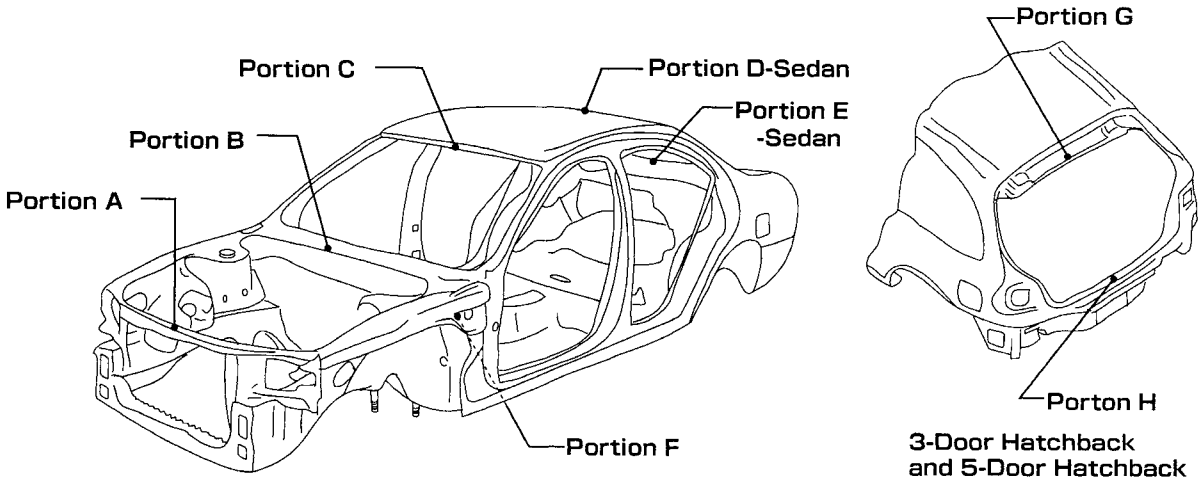

Unit: mm

Portion A	Portion B	Portion C
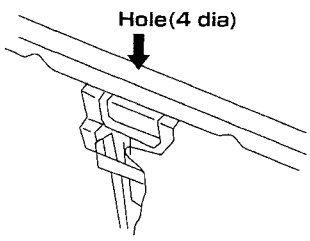 ● Upper radiator core support	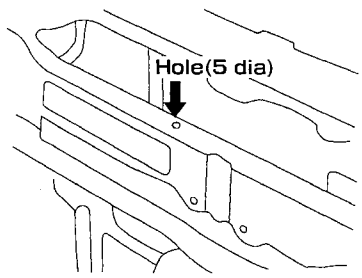 ● Cowl top	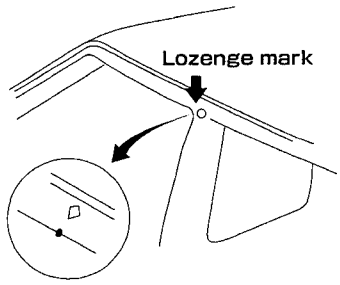 ● Front roof
Portion D	**Portion E**	**Portion F**
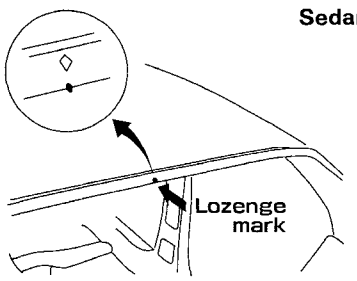 ● Rear roof	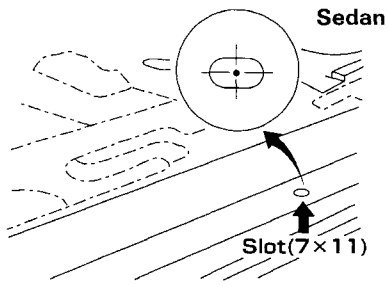 ● Rear waist panel slot	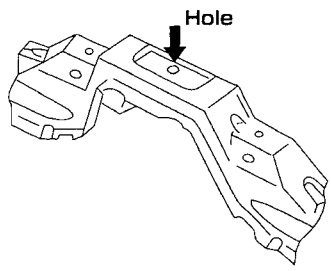 ● Second cross member
Portion G	**Portion H**	
3-door and 5-door Hatchback 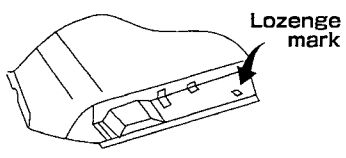 ● Rear roof	3-door and 5-door Hatchback 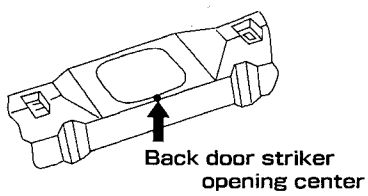 ● Rear panel	

Panel Parts Matching Marks

A mark has been placed on each part of the body to indicate the panel parts matching positions. When repairing parts damaged by an accident which might affect the vehicle frame (members, pillars, etc.) more accurate, effective repair will be possible by using these marks together with body alignment data.

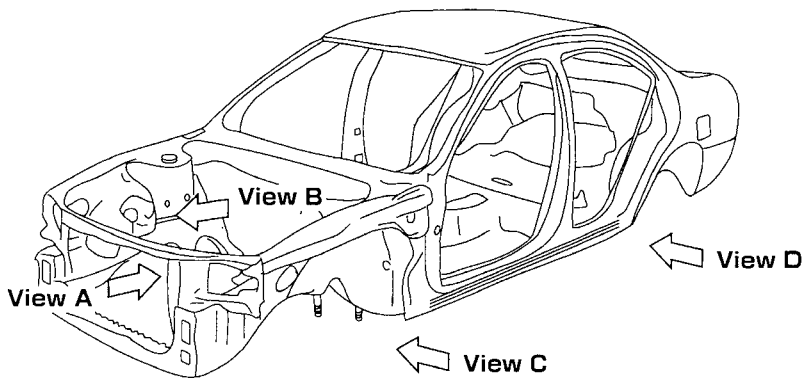

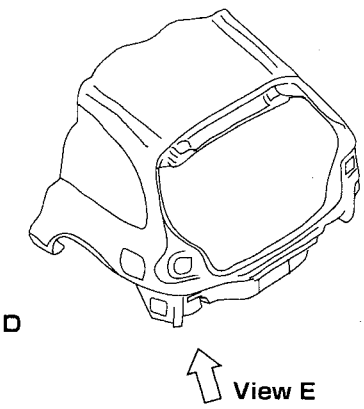

3-Door Hatchback
and 5-Door Hatchback

Type W: ◎····· 

Type V: 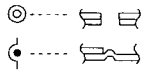

View A	View B	View C
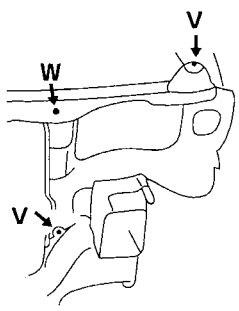	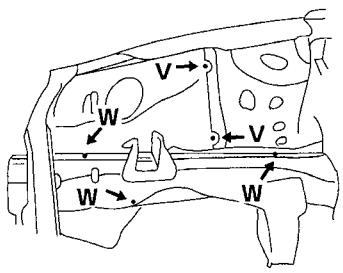	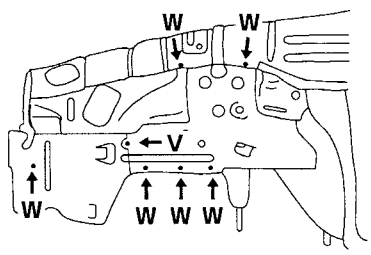
View D-1	View D-2	View E
Sedan and 5-door Hatchback 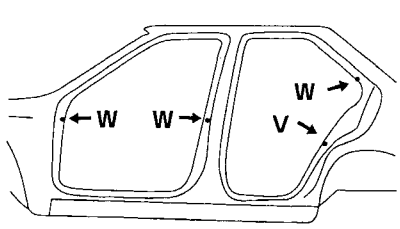	3-door Hatchback 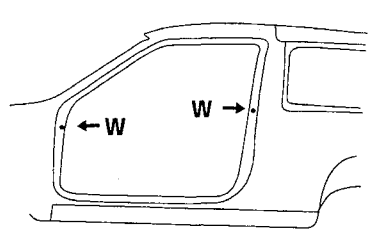	3-door Hatchback and 5-door Hatchback 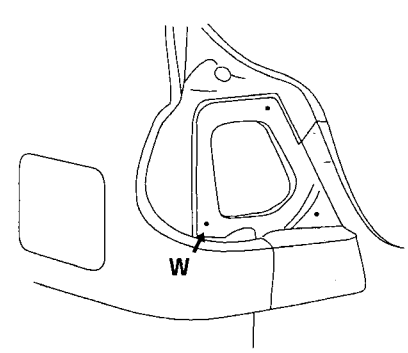

Simpo PDF Merge and Split Unregistered Version - http://www.simpopdf.com

Description

- All dimensions indicated in figures are actual ones.
- When using a tracking gauge, adjust both pointers to equal length. Then check the pointers and gauge itself to make sure there is no free play.
- When a measuring tape is used, check to be sure there is no elongation, twisting or bending.
- Measurements should be taken at the center of the mounting holes.
- An asterisk (*) following the value at the measuring point indicates that the measuring point on the other side is symmetrically the same value.
- The coordinates of the measurement points are the distances measured from the standard line of "X", "Y" and "Z".

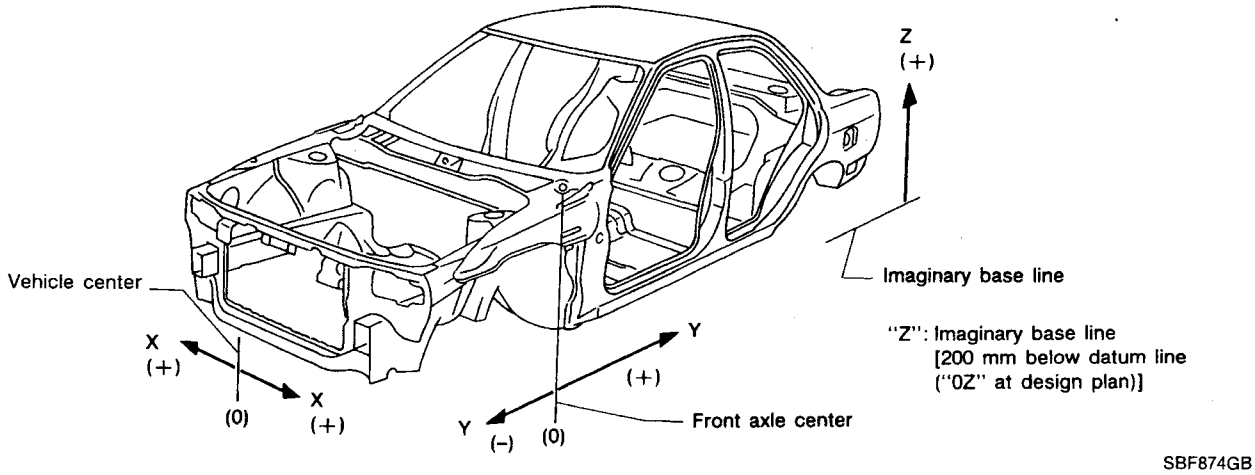

Engine Compartment

MEASURMENT

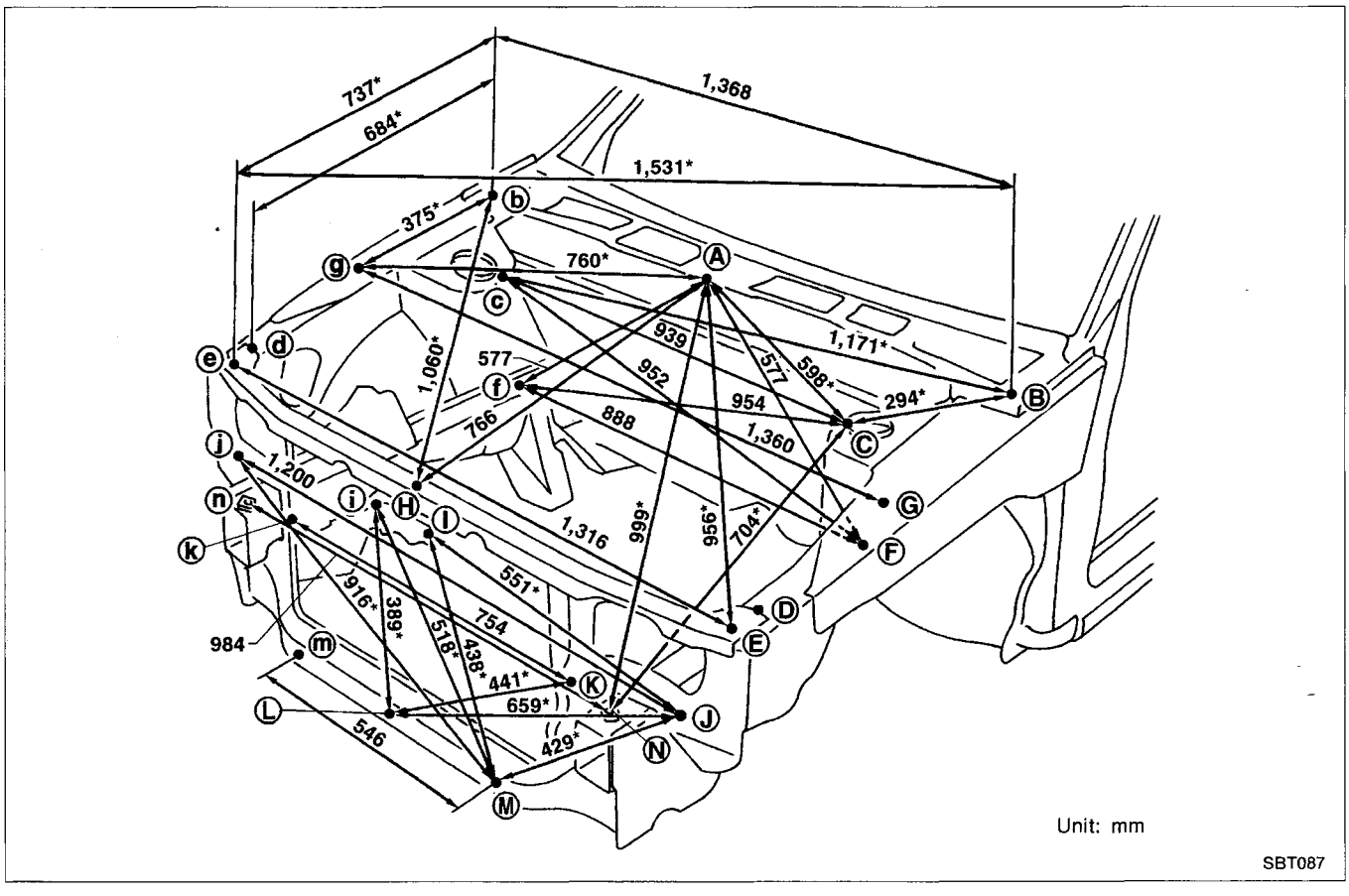

Engine Compartment

MEASURMENT POINTS

Unit: mm

Cowl top center

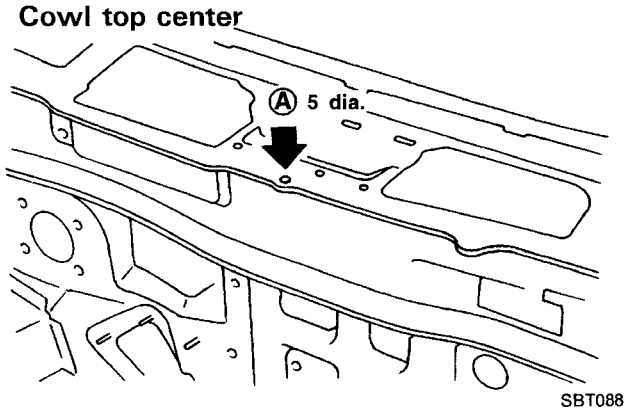

SBT088

Radiator core support upper and Radiator core support side

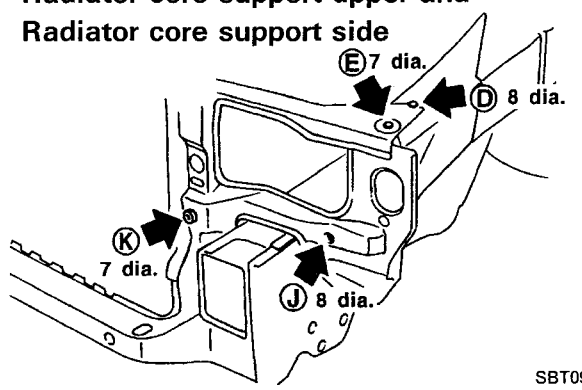

SBT092

Strut tower and cowl top side

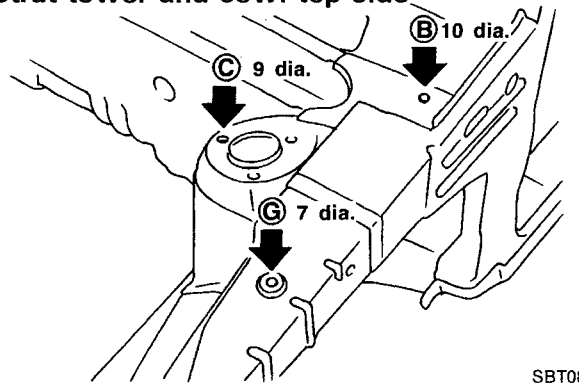

SBT089

Front side

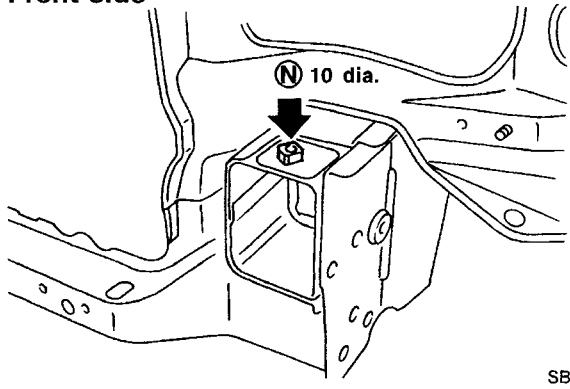

SBT093

Front side member RH side

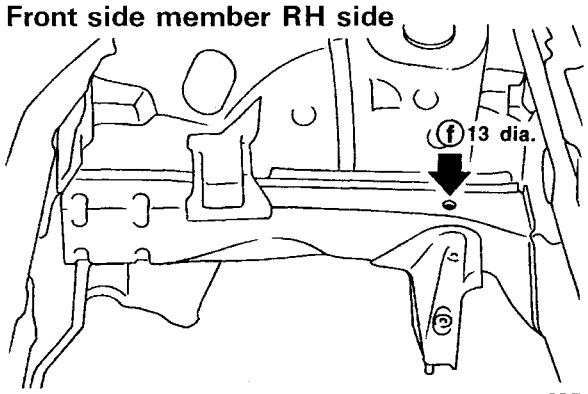

SBT090

Radiator core support lower

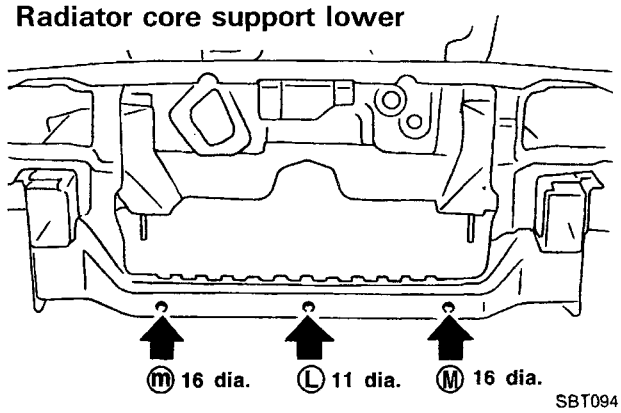

SBT094

Radiator core support upper center

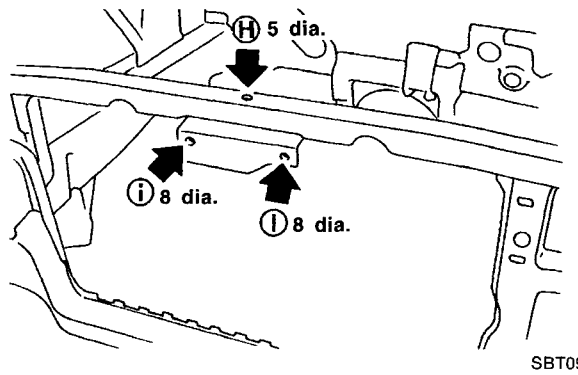

SBT091

Simpo PDF Merge and Split Unregistered Version - http://www.simpopdf.com

Underbody

MEASURMENT

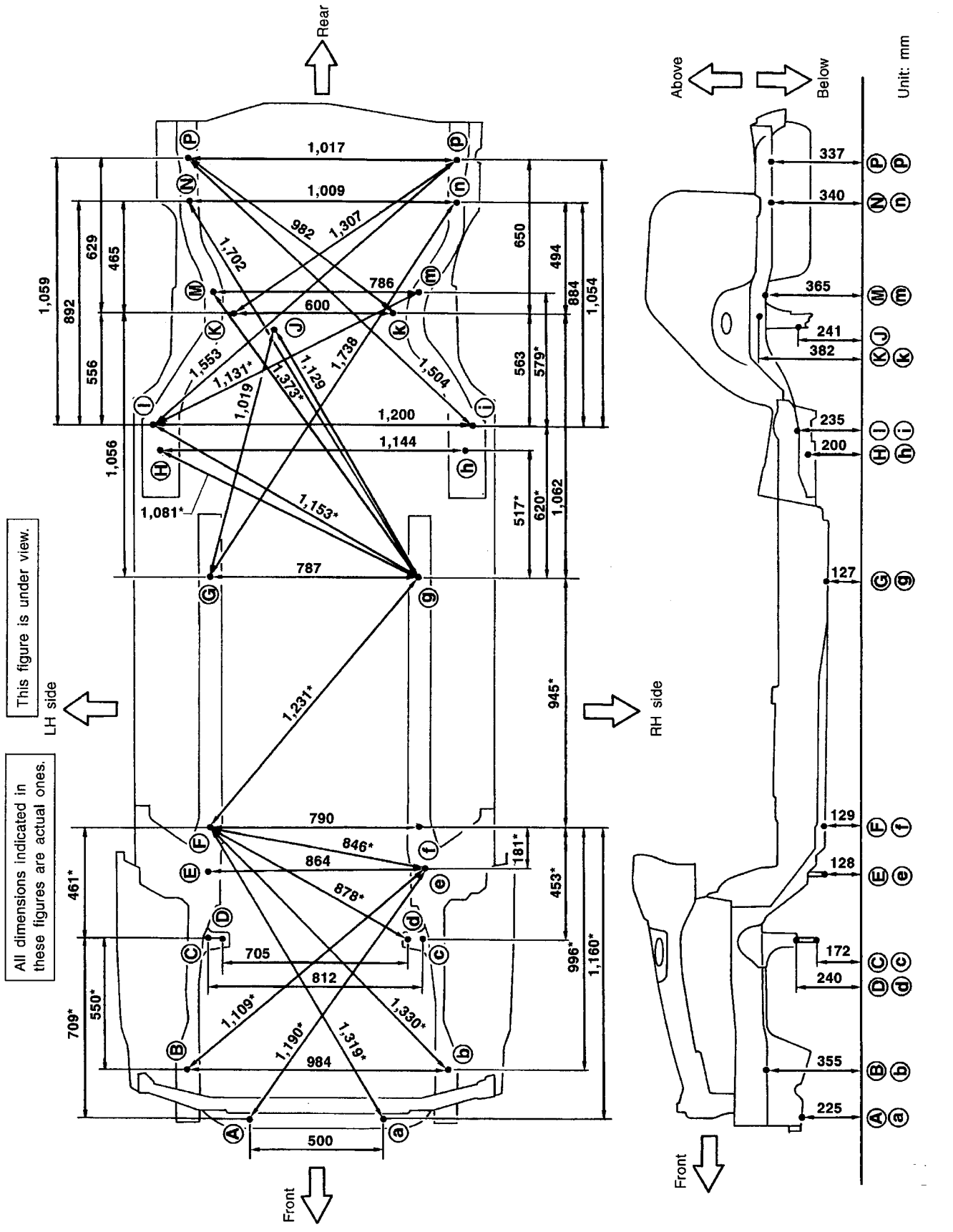

SBT096

Underbody

MEASURMENT POINTS

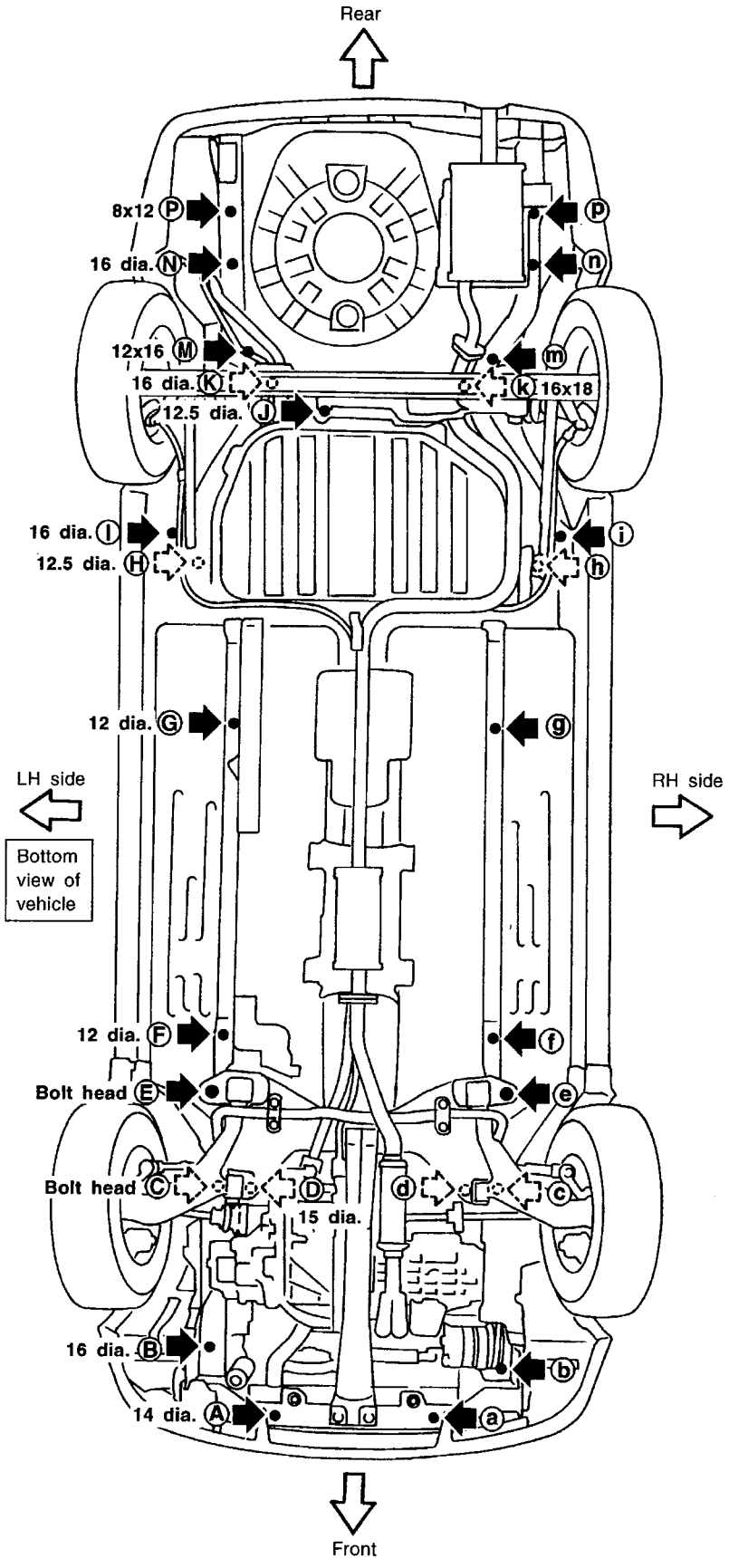

Front coordinates:

Ⓐ, ⓐ
X : 250
Y : –632
Z : 224.8

Ⓑ, ⓑ
X : 492
Y : –450
Z : 355

Ⓒ, ⓒ
X : 406
Y : 64
Z : 172

Ⓓ, ⓓ
X : 352.7
Y : 69
Z : 240

Ⓔ, ⓔ
X : 432
Y : 338
Z : 128

Ⓕ, ⓕ
X : 395
Y : 515
Z : 129.2

Rear coordinates:

Ⓖ, ⓖ
X : 393.5
Y : 1,460
Z : 126.9

Ⓗ, ⓗ
X : 572
Y : 1,940
Z : 200

Ⓘ, ⓘ
X : 600
Y : 2,035
Z : 235.2

Ⓙ
X : 150
Y : 2,442.9
Z : 241

Ⓚ
X : 300
Y : 2,480
Z : 381.8

ⓚ
X : –300
Y : 2,480
Z : 405.8

Ⓜ, ⓜ
X : 393
Y : 2,560
Z : 365

Ⓝ
X : 470
Y : 2,911
Z : 339.6

ⓝ
X : –539
Y : 2,911
Z : 339.6

Ⓟ
X : 475
Y : 3,082
Z : 336.8

ⓟ
X : –542
Y : 3,082
Z : 336.8

Unit: mm

Front and rear strut tower centers

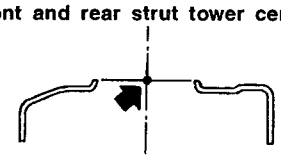

Coordinates:

Ⓡ, ⓡ
X : 522.2
Y : 18.1
Z : 571.7

Ⓢ, ⓢ
X : 465
Y : 2,456.4
Z : 522

Front Ⓡ, ⓡ 76 dia.
Rear Ⓢ, ⓢ 62 dia.

SBT097

Simpo PDF Merge and Split Unregistered Version - http://www.simpopdf.com

Passenger Compartment

Sedan
5-door Hatchback

MEASURMENT

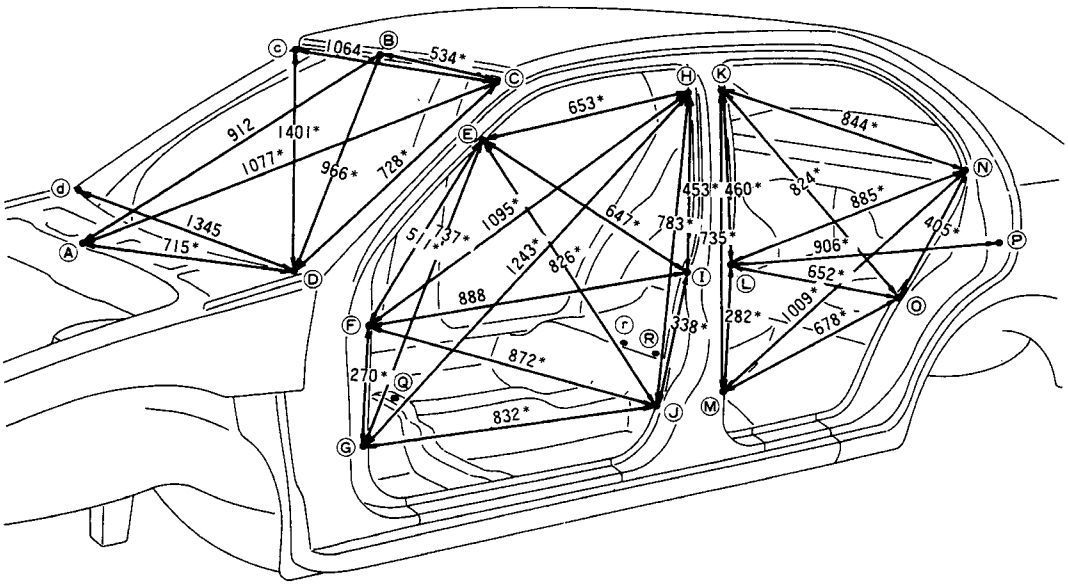

Point	Dimension
Ⓔ~ⓔ	1228
Ⓕ~ⓕ	1374
Ⓖ~ⓖ	1366
Ⓗ~ⓗ	1159
Ⓘ~ⓘ	1387
Ⓙ~ⓙ	1367
Ⓚ~ⓚ	1156
Ⓛ~ⓛ	1385
Ⓜ~ⓜ	1370
Ⓝ~ⓝ	1364
Ⓞ~ⓞ	1364
Ⓟ~ⓟ	1598
Ⓠ~Ⓔ	989*
Ⓠ~Ⓕ	918*
Ⓠ~Ⓗ	1156*
Ⓠ~Ⓘ	917*
Ⓡ~Ⓚ	975*
Ⓡ~Ⓛ	757*
Ⓡ~Ⓝ	1004*
Ⓡ~Ⓞ	723*

Figures marked with a * show symmetrically identical dimensions on both right and left hand sides of the vehicle.

Unit: mm

Ⓐ : Cowl top hole center (5 dia.)

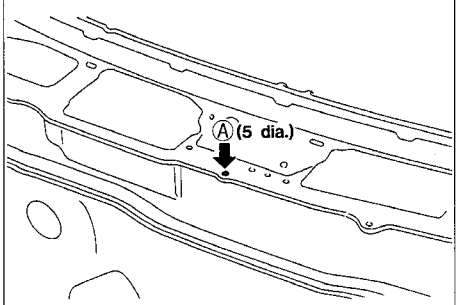

Ⓑ : Front roof flange end at center Positioning mark

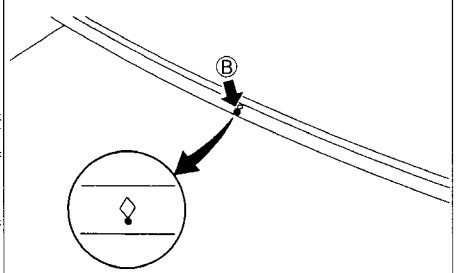

Ⓒⓒ :
Ⓔⓔ : } Outer front pillar joggle

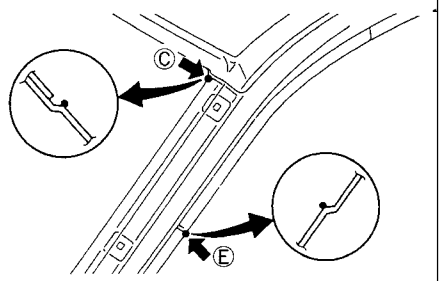

ⒹⒹ : Dash upper flange end corner

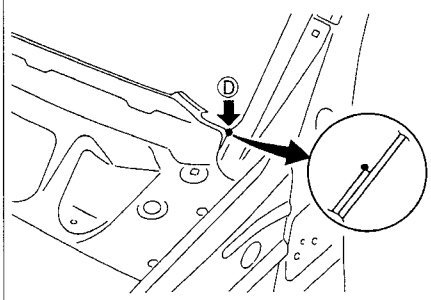

Ⓕⓕ :
Ⓖⓖ : } Outer front pillar indention

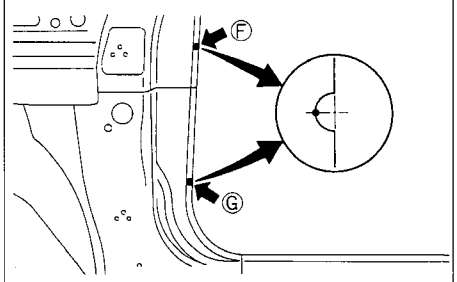

Ⓗ,ⓗ,Ⓙ,ⓙ,Ⓚ,ⓚ,Ⓛ,ⓛ,Ⓜ,ⓜ :
Outer center pillar indention
ⒾⒾ : Outer center pillar standard hole center

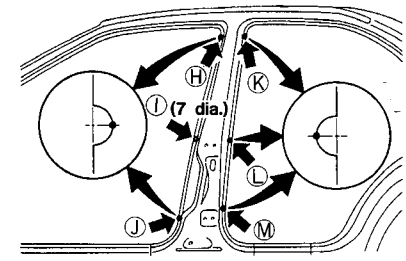

Sedan
5-door Hatchback

Passenger Compartment

MEASURMENT

Unit: mm

Ⓝⓝ : Rear fender standard hole center (7dia)
ⓄⓄ : Rear fender indention
ⓅⓅ : Door switch installing hole center (20 dia.)

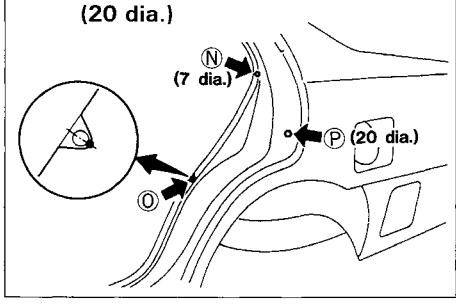

Ⓠ : 2nd crossmember standard hole center at center positioning mark (8 dia.)
ⓇⓇ : Rear floor harness installing hole center (8 dia.)

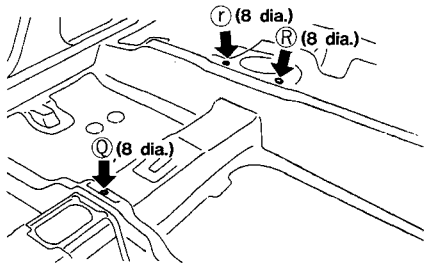

Simpo PDF Merge and Split Unregistered Version - http://www.simpopdf.com

Rear Body

Sedan

MEASUREMENT

Point	Dimension
Ⓔ~Ⓕ	189*
Ⓔ~ⓕ	1213*
Ⓔ~Ⓗ	608*
Ⓕ~ⓖ	1110*

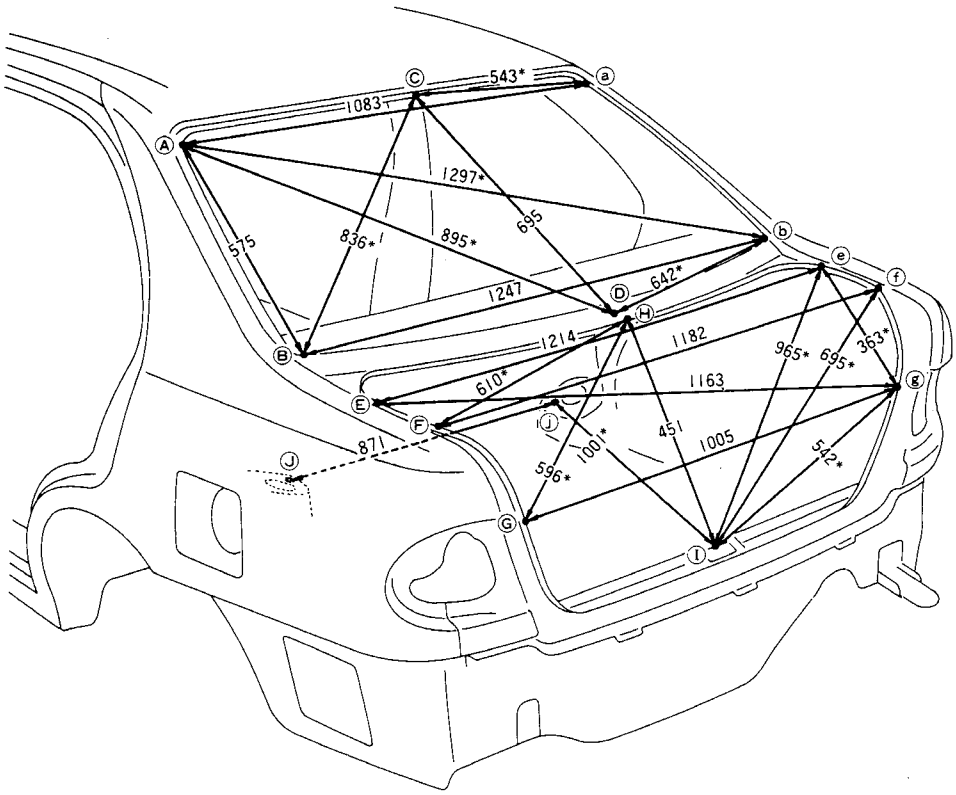

Figures marked with a * show symmetrically identical dimensions both right and left and left hand sides of the vehicle.

Unit: mm

Ⓐⓐ : Rear fender joggle
Ⓒ : Roof flonge positioning mark at center positioning mark

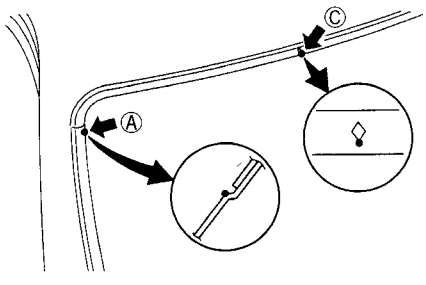

ⒷⒷ : Rear fender joggle

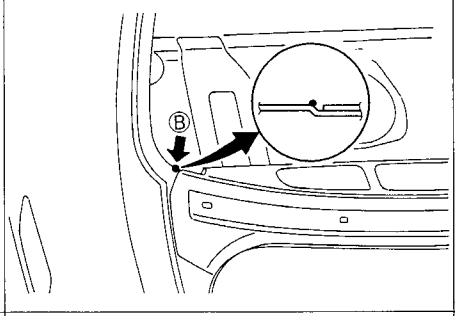

Ⓓ : Rear waist molding installing hole center at center positioning mark (7 dia×11)
Ⓗ : Rear waist panel flange end at center positioning mark

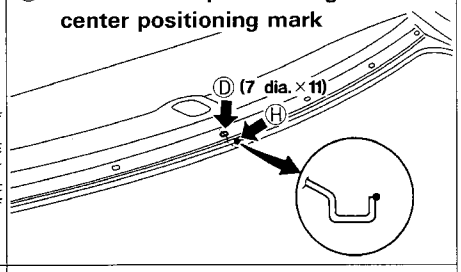

Ⓔⓔ : Rear fender joggle
ⒻⒻⒼⓖ : Rear fender corner joggle

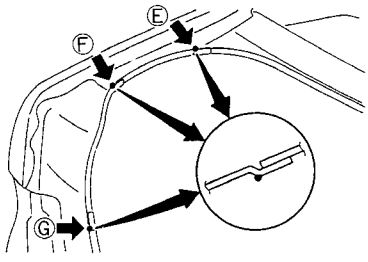

Ⓘ : Rear panel trunk lid lock installing hole flange end at center positioning mark

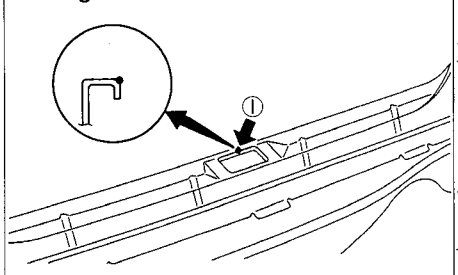

Ⓙ : Rear suspension installing hole center (9 dia.)

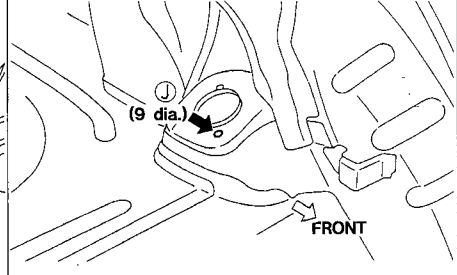

Passenger Compartment

3-door Hatchback

MEASUREMENT

Point	Dimension
Ⓔ~ⓔ	1228
Ⓕ~ⓕ	1374
Ⓗ~ⓗ	1094
Ⓘ~ⓘ	1388
Ⓙ~ⓙ	1558
Ⓗ~ⓜ	871
Ⓚ~Ⓔ	989*
Ⓚ~Ⓕ	918*
Ⓚ~Ⓗ	1193*
Ⓚ~Ⓘ	1043*
Ⓛ~Ⓗ	1017*
Ⓛ~Ⓜ	655*

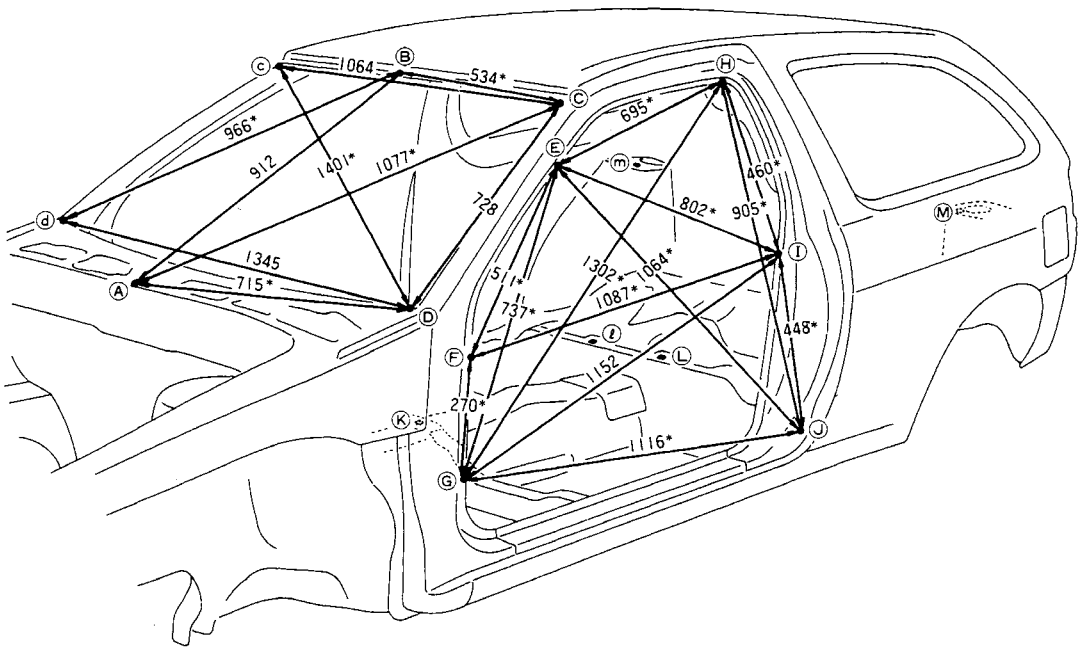

Figures marked with a * show symmetrically identical dimensions on both right and left hand sides of the vehicle.

Unit: mm

Ⓐ : Cowl top hole center (5 dia.)

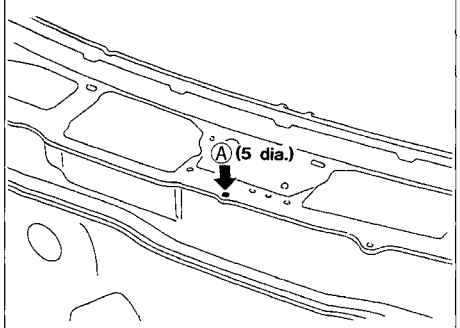

Ⓑ : Front roof flange end at center Positioning mark

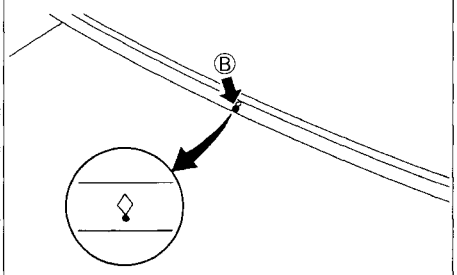

Ⓒc : } Outer front pillar joggle
Ⓔe : }

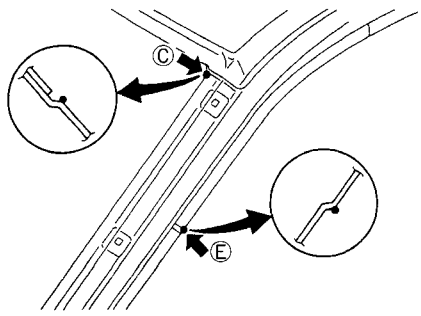

Ⓓd : Dash upper flange end corner

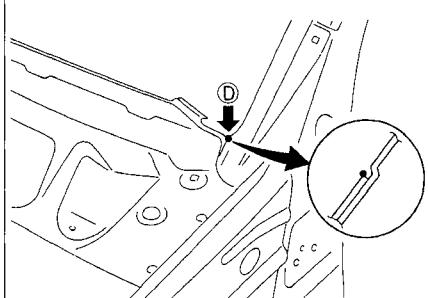

Ⓕf : } Outer front pillar indention
Ⓖg : }

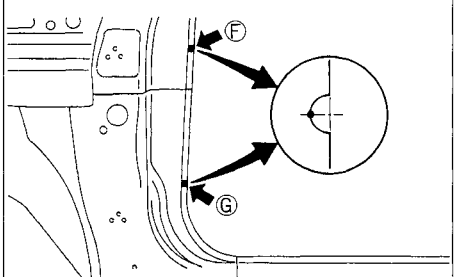

Ⓗh : Rear fender joggle
Ⓘi : Rear fender indention
Ⓙj : Door switch installing hole center (7 dia.) of nut

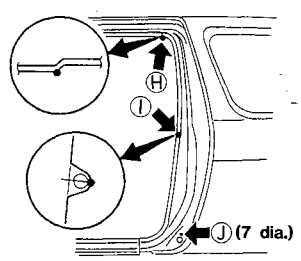

Simpo PDF Merge and Split Unregistered Version - http://www.simpopdf.com

Passenger Compartment

3-door Hatchback

Unit: mm

Ⓚ : 2nd crossmember standard hole center at center positioning mark (8 dia.)
ⓁⒾ : Rear floor harness installing hole center (8 dia.)

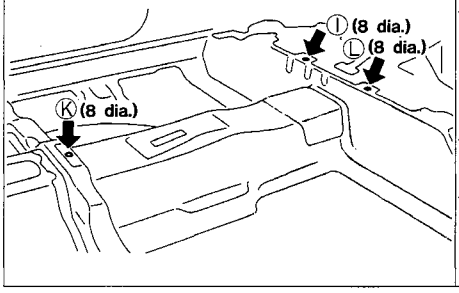

Ⓜ : Rear suspension installing hole center (9 dia.)

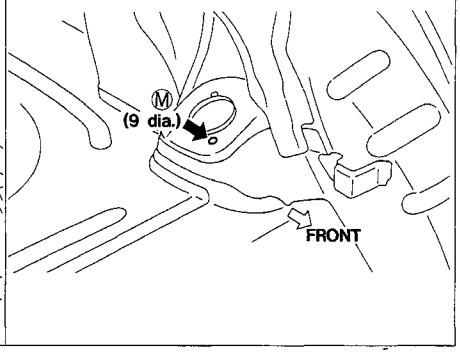

3-door Hatchback
5-door Hatchback

Rear Body

MEASUREMENT

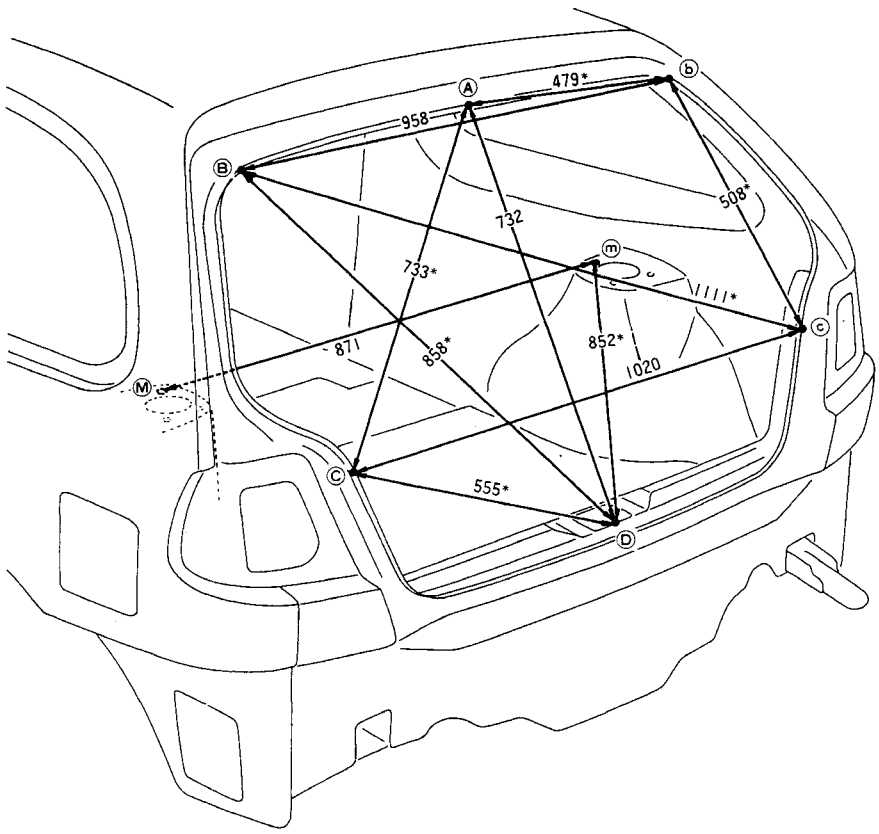

Figures marked with a * show symmetrically identical dimensions on both right and left hand sides of the vehicle.

Unit: mm

Ⓐ : Rear roof flange end at center positioning mark
Ⓑⓑ : Rear fender extension joggle

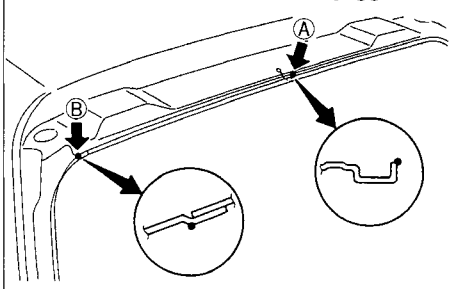

Ⓒⓒ : Rear fender corner joggle

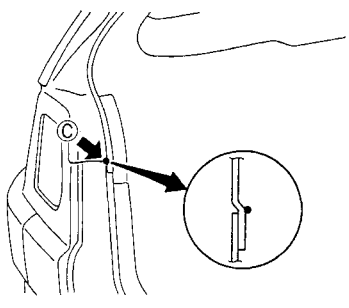

Ⓓ : Rear panel reinforcement back door lock hole center at center positioning mark

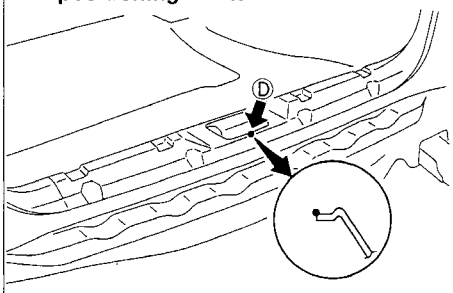

ⓂⓂ : Rear suspention installing hole center (9 dia.)

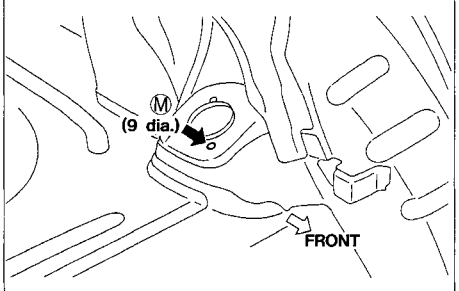

Simpo PDF Merge and Split Unregistered Version - http://www.simpopdf.com

Handling Precautions For Plastics

Abbreviation	Material name	Heat resisting temperature °C (°F)	Resistance to gasoline and solvents	Other cautions
PE	Polyethylene	80 (176)	Gasoline and most solvents are harmless.	Flammable
PET	Polyethylene terephthalate	180 (356)	Gasoline and most solvents are harmless.	
PVC	Polyvinyl chloride	80 (176)	Gasoline and most solvents are harmless if applied for a very short time (wide up quickly).	Poison gas is emitted when burned.
PP	Polypropylene	90 (194)	Same as above. Also avoid battery acid.	Flammable
ABS	Acrylonitrile butadiene styrene resin	80 (176)	Avoid gasoline and solvents.	
AES	Acrylonitrile ethylene styrene	80 (176)	Avoid gasoline and solvents.	
PMMA	Polymethyl methacrylate	85 (185)	Avoid gasoline and solvents.	
PUR	Polyurethane	90 (194)	Gasoline and most solvents are harmless.	Avoid battery acid.
AAS	Acrylonitrile acrylic rubber styrene	85 (185)	Avoid gasoline and solvents.	
AS	Styrene-acrylonitrile	85 (185)	Avoid gasoline and solvents.	
PPO	Polyphenylene oxide	110 (230)	Avoid gasoline and solvents.	
POM	Polyacetal	120 (248)	Gasoline and solvents are harmless.	Avoid battery acid.
PC	Polycarbonate	120 (248)	Avoid gasoline and solvents.	
PA	Polyamide (Nylon)	140 (284)	Gasoline and most solvents are harmless.	Avoid immersing in water.
FRP	Fiber reinforced plastics	170 (338)	Gasoline and most solvents are harmless.	Avoid battery acid.
PPC	Polypropylene composite	115 (239)	Gasoline and most solvents are harmless.	Flammable
PBT	Polybutylene terephthalate	140 (284)	Gasoline and most solvents are harmless.	
TPR	Thermoplastic rubber	80 (176)	Avoid gasoline and solvents.	
TPE	Thermoplastic elastomer	80 (176)	Avoid gasoline and solvents.	
TPUR	Thermoplastic polyurethane	80 (176)	Avoid gasoline and solvents.	

1. **When repairing and painting a portion of the body adjacent to plastic parts, consider their characteristics (influence of heat and solvent) and remove them if necessary or take suitable measures to protect them.**
2. **Plastic parts should be repaired and painted using methods suiting the materials.**

Location Of Plastic Parts

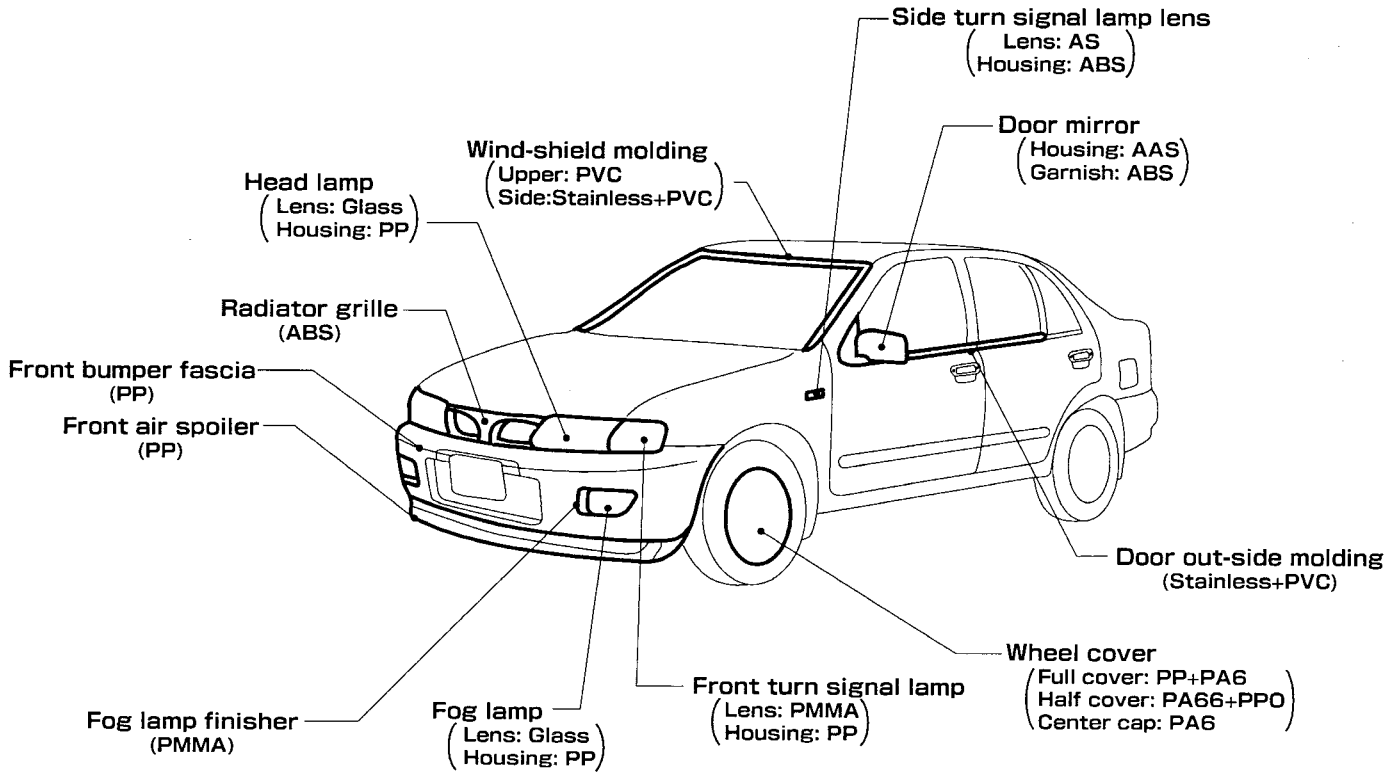

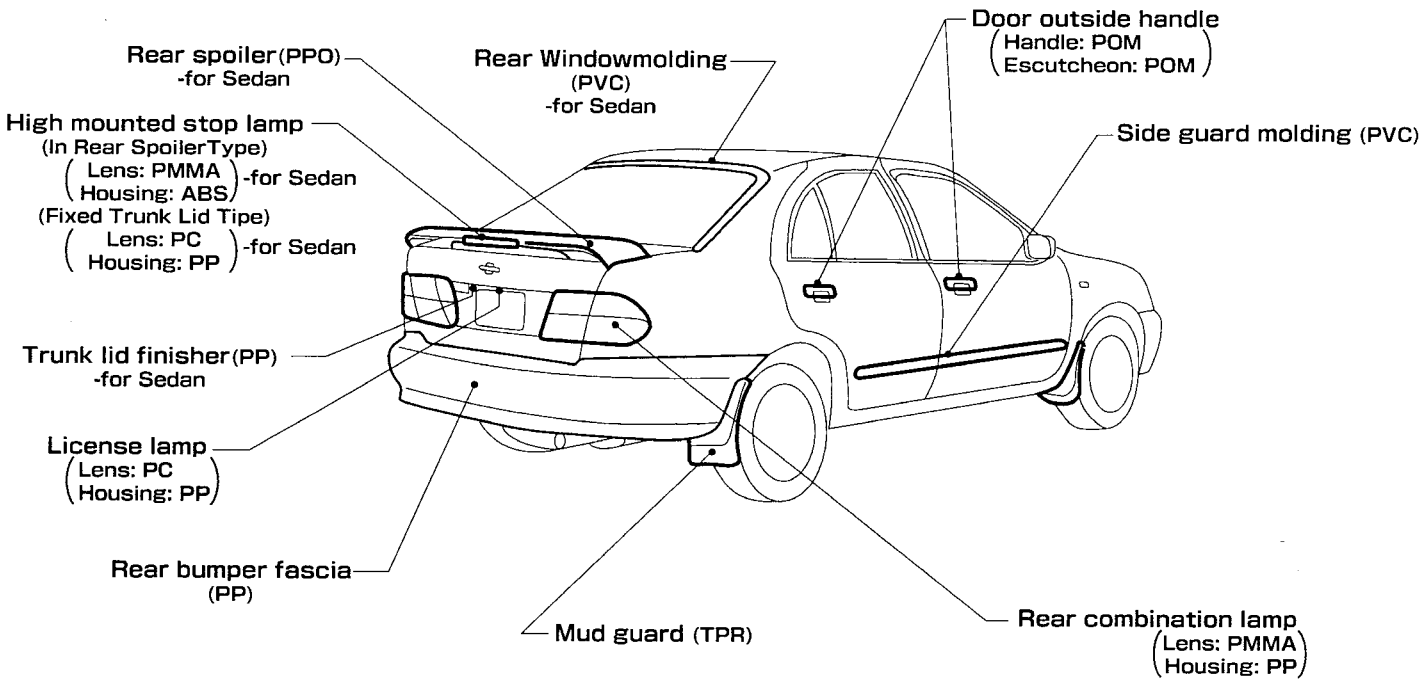

Simpo PDF Merge and Split Unregistered Version - http://www.simpopdf.com

Location Of Plastic Parts

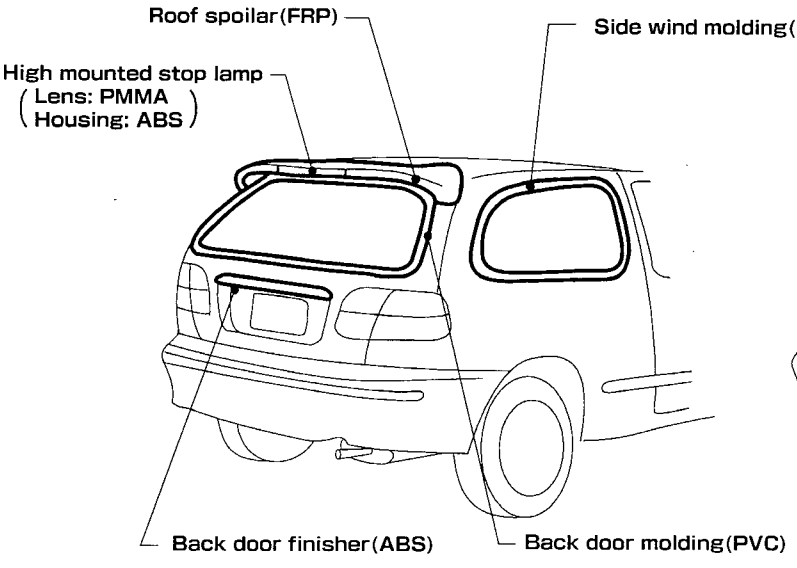

3-door Hatchback

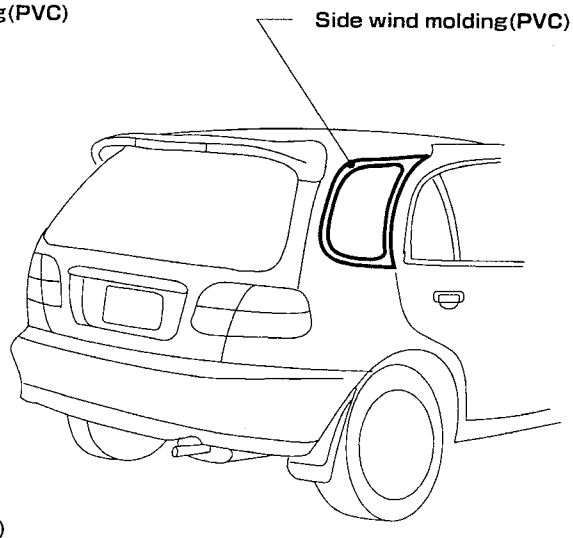

5-door Hatchback

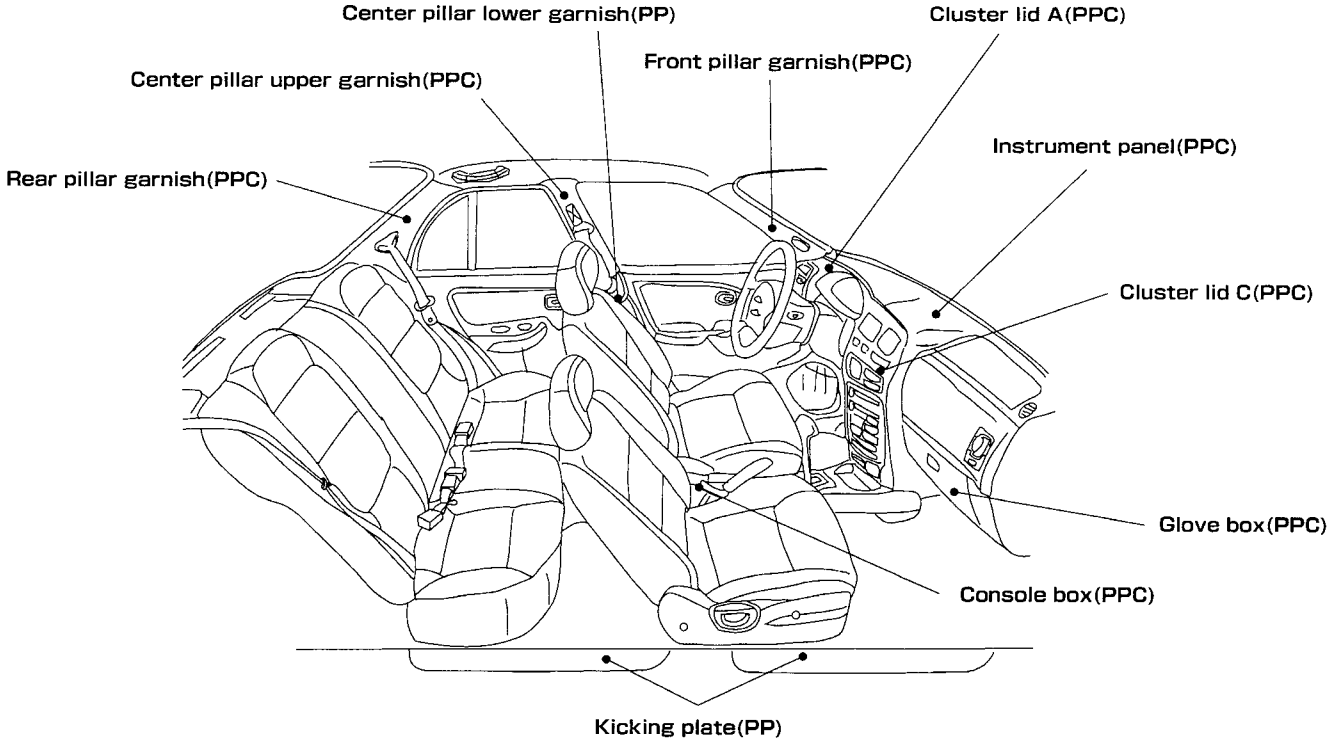

Precautions For Handling High Strength Steel

High strength steel has been used for body panels in order to reduce vehicle weight.
Accordingly, precautions in repairing automotive bodies made of high strength steel are described below:

HIGH STRENGTH STEEL (HSS) USED IN NISSAN VEHICLES

Tensile strength	Nissan designation	Major applicable parts
373N/mm² (38 kg/mm², 54 klb/sq in)	NP130	● Side member ● Hoodledge ● Pillar ● Hood ● Trunk lid outer
785-981 N/mm² (80-100 kg/mm² 114-142 klb/sq in)	NP150	● Bumper reinforcement ● Door guard beam

- In Nissan vehicles, HSS plates of 373 N/mm² (38kg/mm², 54 klb/sq in) (NP130) are most commonly utilized, and those with a tensile strength of 785 to 981 N/mm² (80 to 100 kg/mm², 114 to 142 klb/sq in) (NP150) are used only on parts requiring much more strength.

Simpo PDF Merge and Split Unregistered Version - http://www.simpopdf.com

Precautions For Handling High Stregth Steel

Special consideration for HSS must be given to the following points:

1. Additional points to consider

- The repair of reinforcements (such as side members) by heating is not recommended since it involves the risk of lowering strength. When heating is unavoidable, do not heat such parts at temperatures above 550°C (1, 022°F)
  Heating temperature should be verified with a thermometer. (A crayon-type and other thermometer are available.)

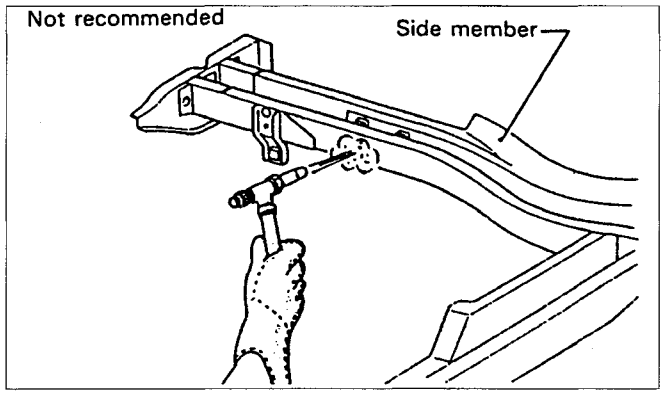

- When straightening body panels, use caution in pulling any HSS panel. Because it is very strong, this may cause deformation in adjacent portions of the body. In this case, increase the number of measuring points, and carefully pull the HSS panel.

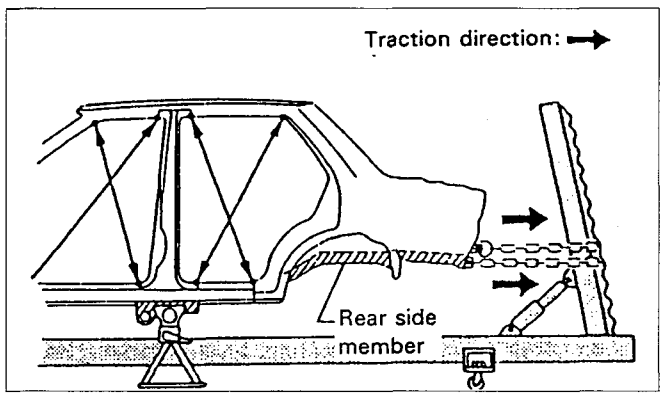

- In cutting HSS panel, avoid gas cutting if possible. Instead, use an air saw or a hand cutter to avoid decreasing the strength of surrounding portions due to the influence of heat. In case gas cutting is inevitable, a minimum allowance of 50 mm (1.97 in) must be given.

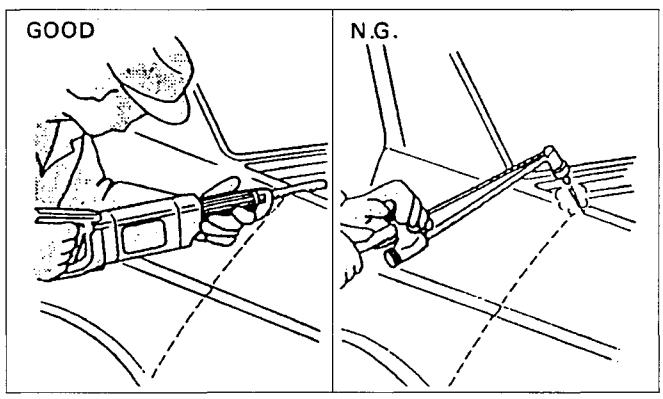

- In welding HSS panel, use spot welding whenever possible in order to minimize any decrease in strength of surrounding portions due to the influence of heat.
  If spot welding is impossible, use M.I.G. welding. Donot use acetylene gas welding because it is inferior in welding strength.

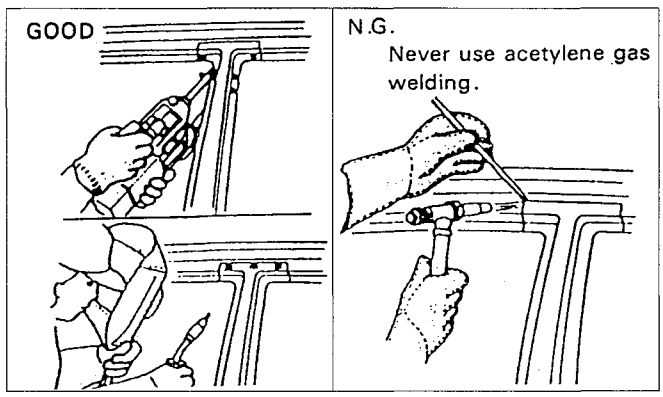

Precautions For Handling High Strength Steel

- The spot ungget on HSS panel is harder than that of an ordinary steel panel.
  Therefore, for spot cutting HSS panel, a high torque drill of a low speed (1,000 to 1,200 rpm) may be used to maintain its durabillty and facilitate the operation.

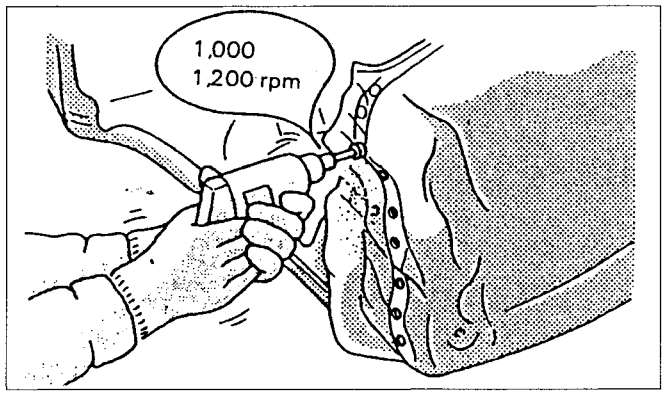

- HSS panels with a tensile strength of 785 to 981 N/mm² (80 to 100 kg/mm², 114 to 142 klb/sq in), used as reinforcement in the door guard bar and in the bumper, is too high in tensile strength to use for general repairs. When these panels are damaged, the outer panels also sustain consequential damage; therefore, these panels are never remedied without replacing the door assembly or bumper assembly.

2. Precautions in spot welding
   This work should be performed under standard work conditions. However, work control must be exercised as followows:

- The electrode tip diameter must be reformed properly according to the panels thickness.

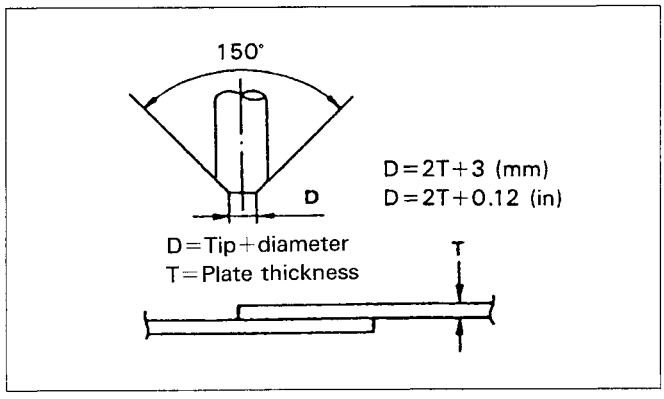

- The panel surfaces must be fitted to each other, leaving no gaps.

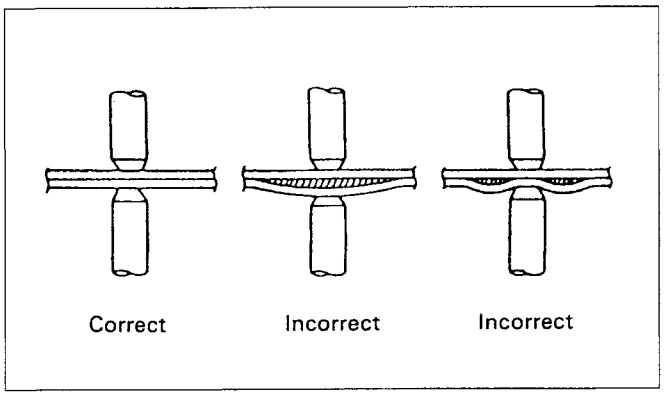

Simpo PDF Merge and Split Unregistered Version - http://www.simpopdf.com

Precautions For Handling High Strength Steel

- Follow established specifications for the appropriate pressure level, current level and weld time.

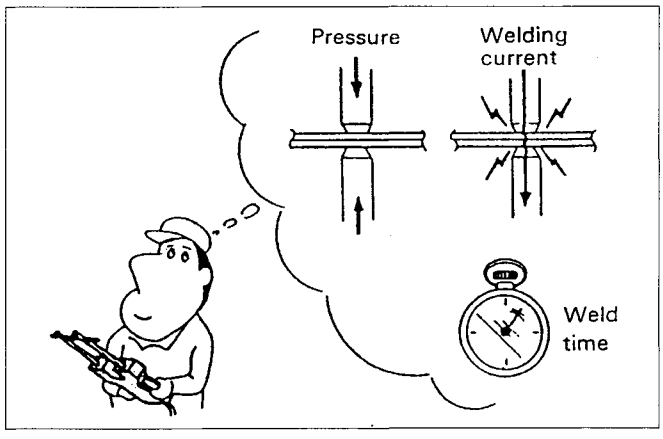

- Follow the specifications for the proper welding pitch.

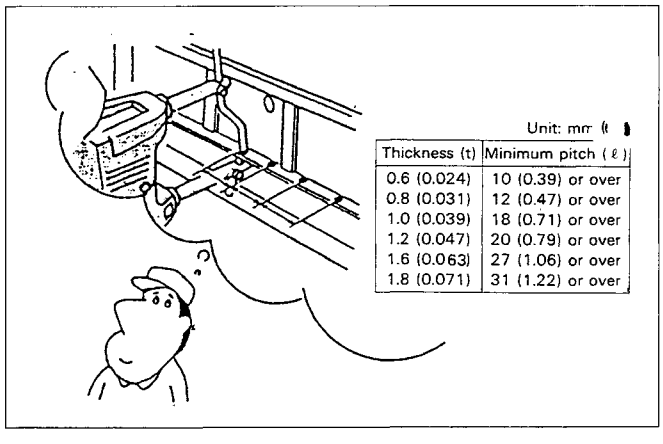

Unit: mm ( )

Thickness (t)	Minimum pitch (ℓ)
0.6 (0.024)	10 (0.39) or over
0.8 (0.031)	12 (0.47) or over
1.0 (0.039)	18 (0.71) or over
1.2 (0.047)	20 (0.79) or over
1.6 (0.063)	27 (1.06) or over
1.8 (0.071)	31 (1.22) or over

- After welding, welding strength must be tested.

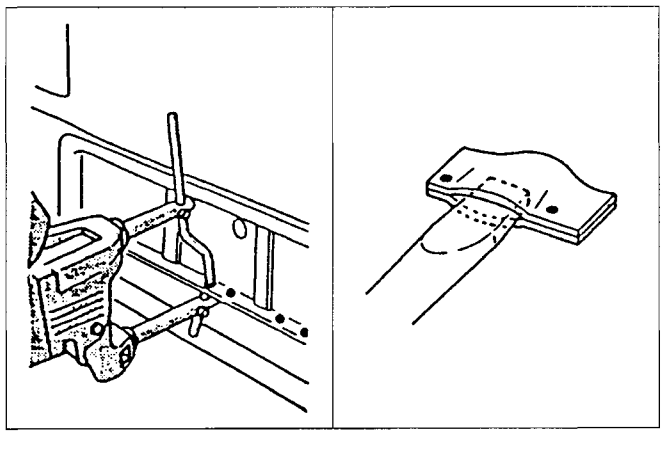

Description

SYMBOLS FOR CUTTING AND WELDING/BRAZING OPERATIONS

The indentification of the cutting and the welding/brazing symbols used throughout this guide is given in the following pages

Saw cut or air chisel cut	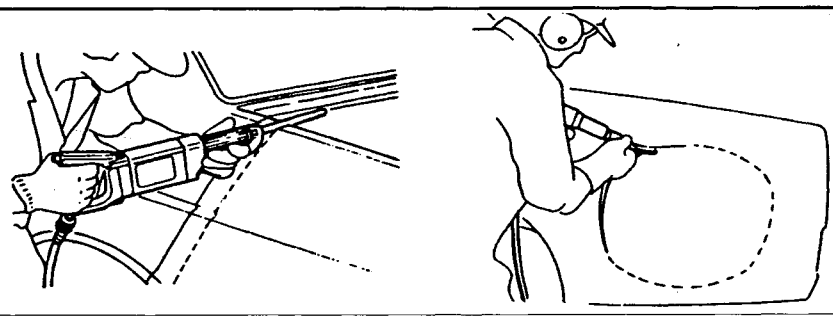
Spot weld — 2-spot welds	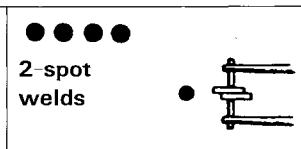
Spot weld — 3-spot welds	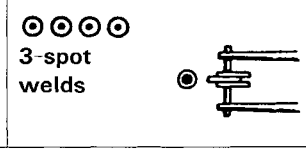
	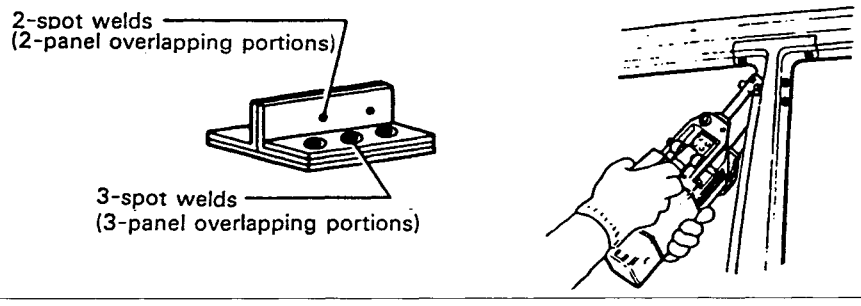
M.I.G. plug weld	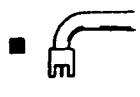
M.I.G. seam weld/ Point weld	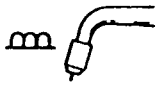
	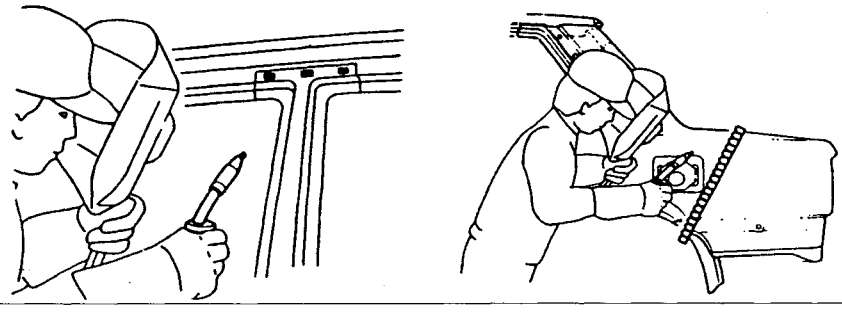
Brazing	
	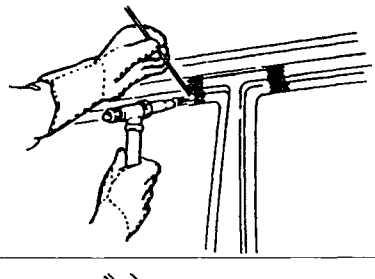
Soldering	
	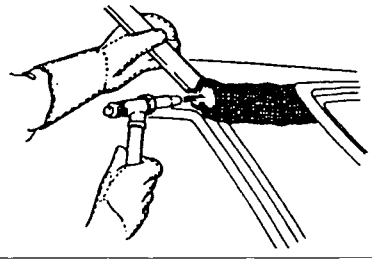
Sealing	
	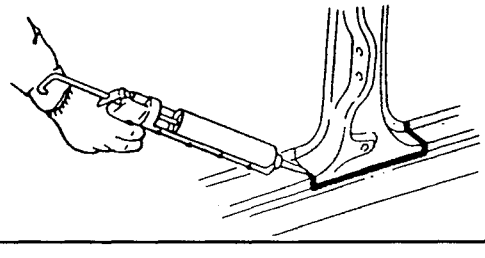

Simpo PDF Merge and Split Unregistered Version - http://www.simpopdf.com

Radiator Core Support (Partial Replacement)

Service Joint

★ indicates that there is an equivalent welding portion with the same dimensions on the opposite side.

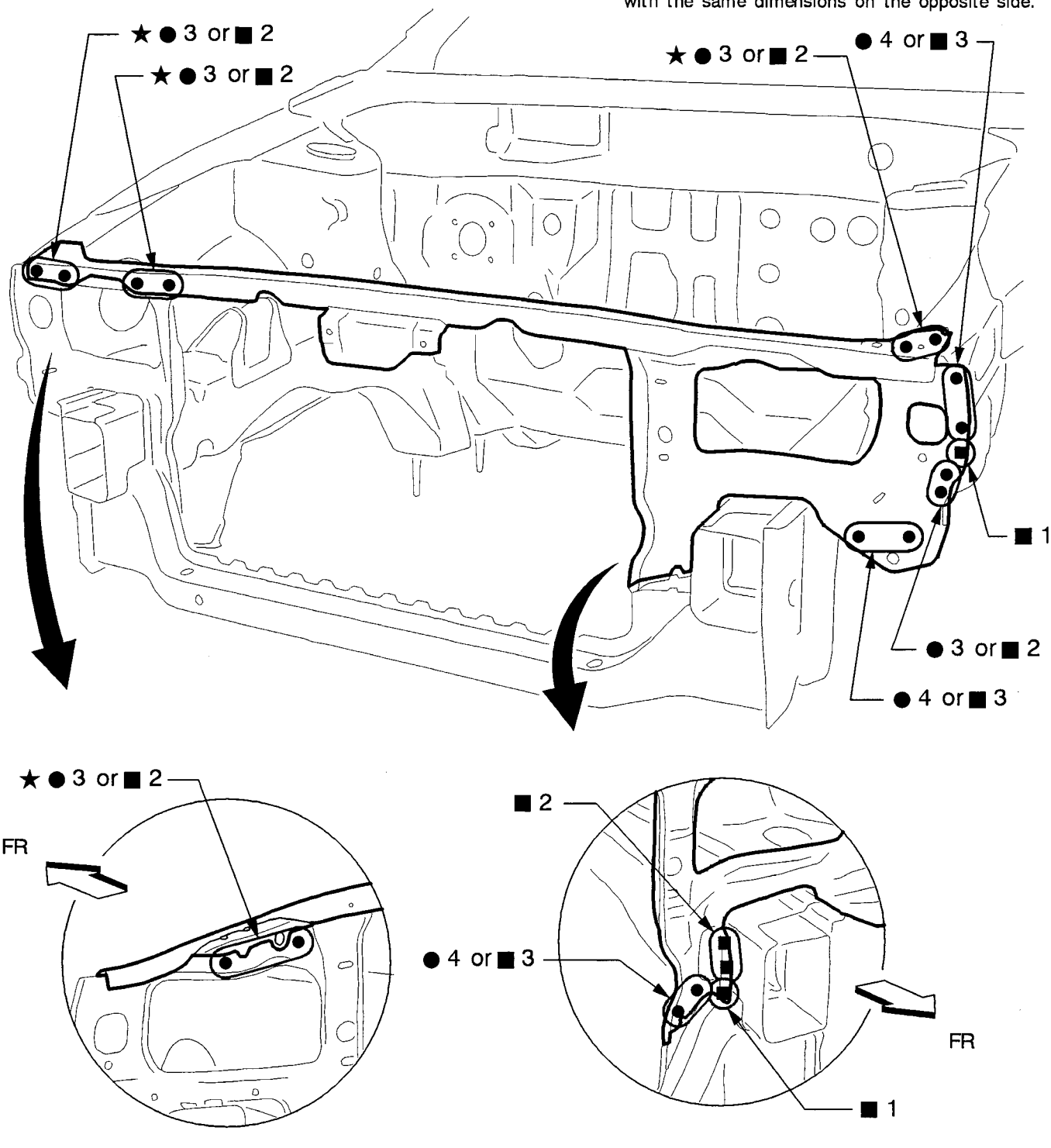

2-spot welds 3-spot welds M. I. G plug weld For 3 panels plug weld method M. I. G seam weld/ Point weld

■ A ■ B

Hoodledge (Partial Replacement)

(Work after radiator core support has been removed.)

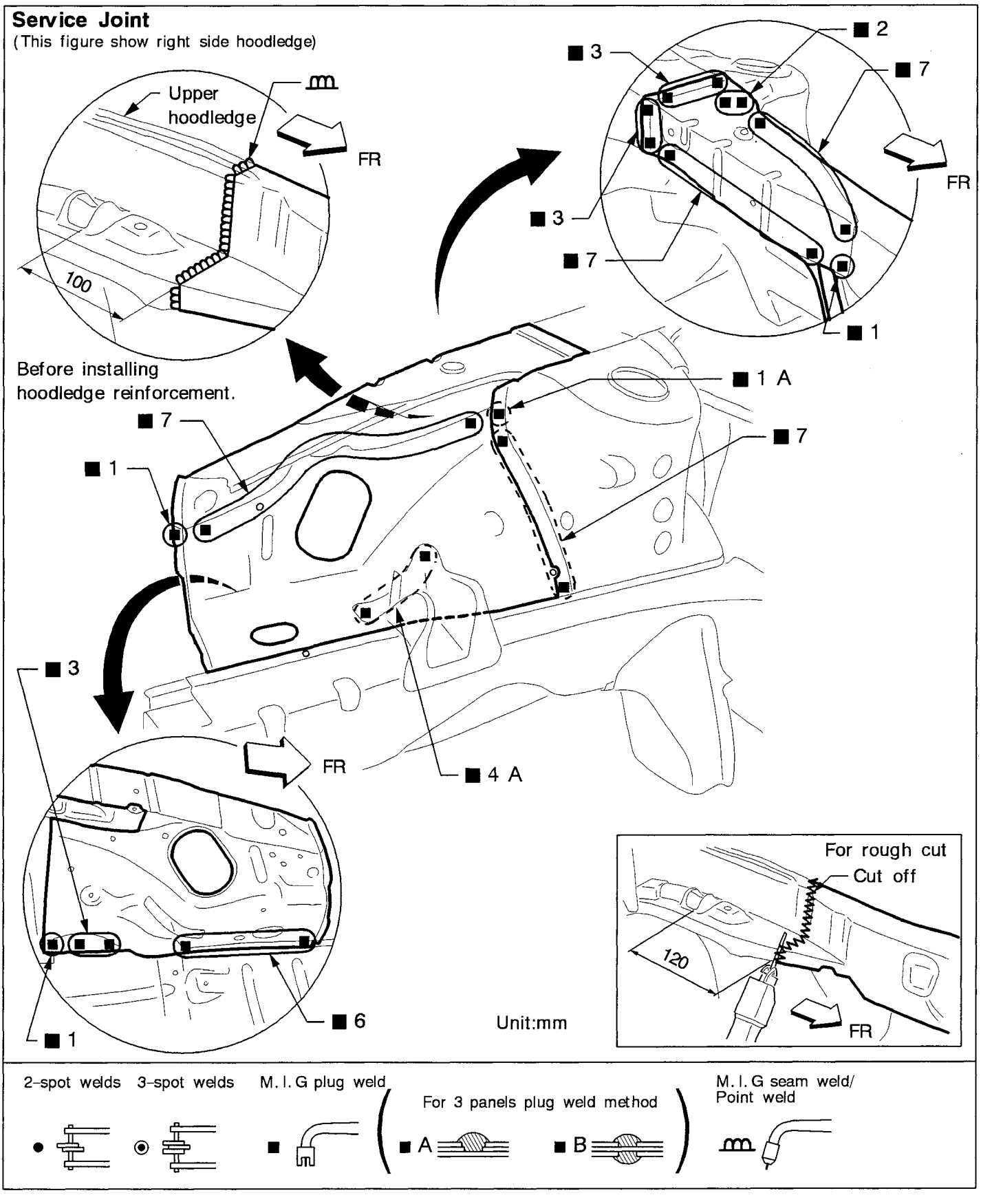

Simpo PDF Merge and Split Unregistered Version - http://www.simpopdf.com

Front Side Member (Partial Replacement)

(Work after radiator core support has been removed.)

Service Joint

(This figure show right front side member)

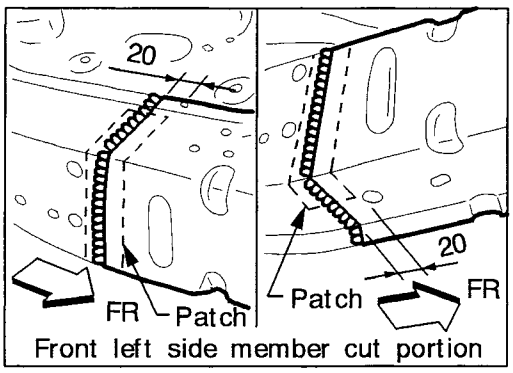

Front left side member cut portion

(Patch should be attached same as right side)

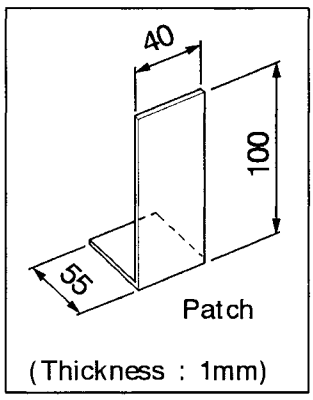

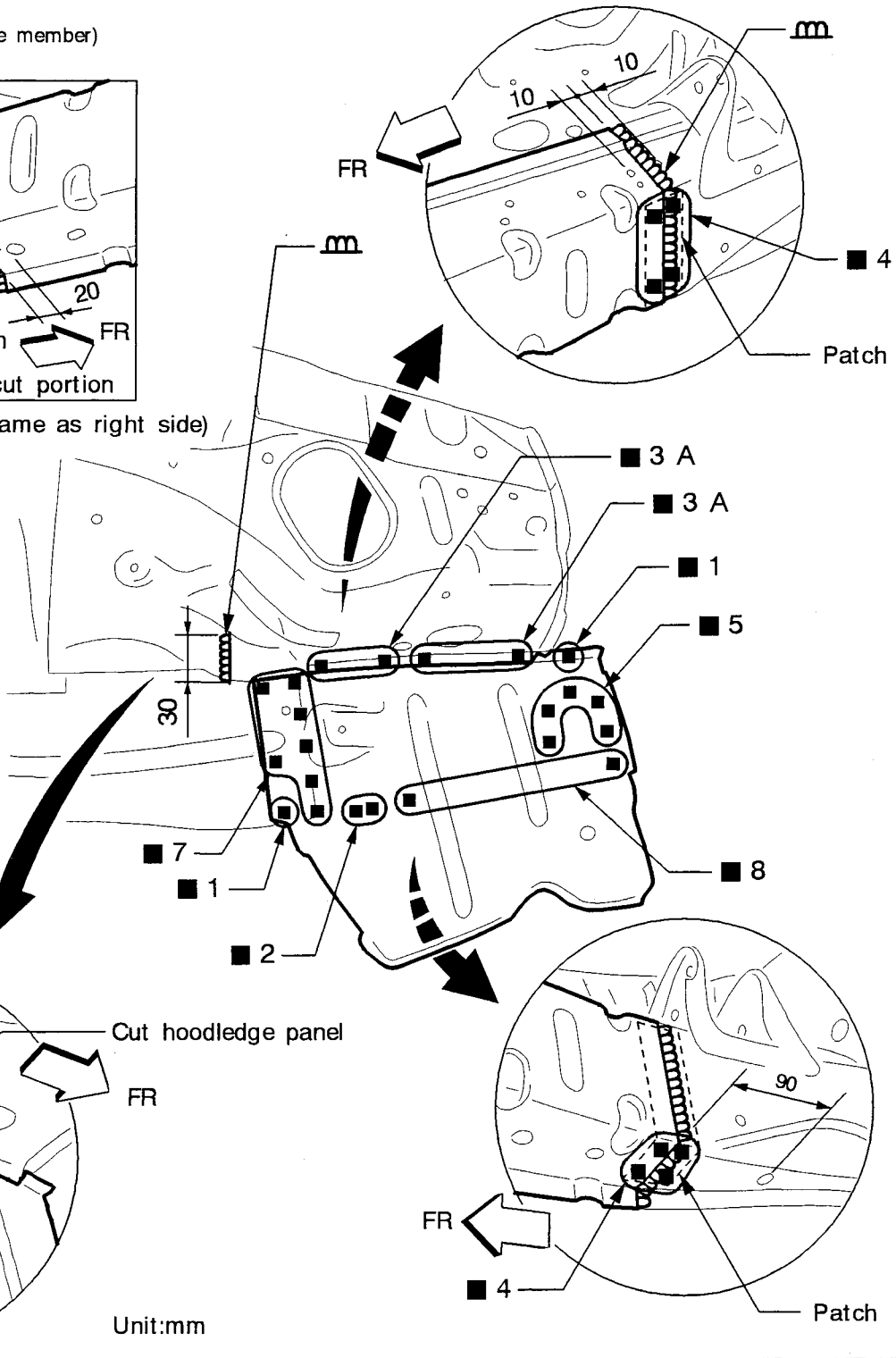

Unit:mm

2-spot welds 3-spot welds M.I.G plug weld For 3 panels plug weld method M.I.G seam weld/ Point weld

Front Pillar

(Work after hoodledge reinforcement has been removed.)

Service Joint

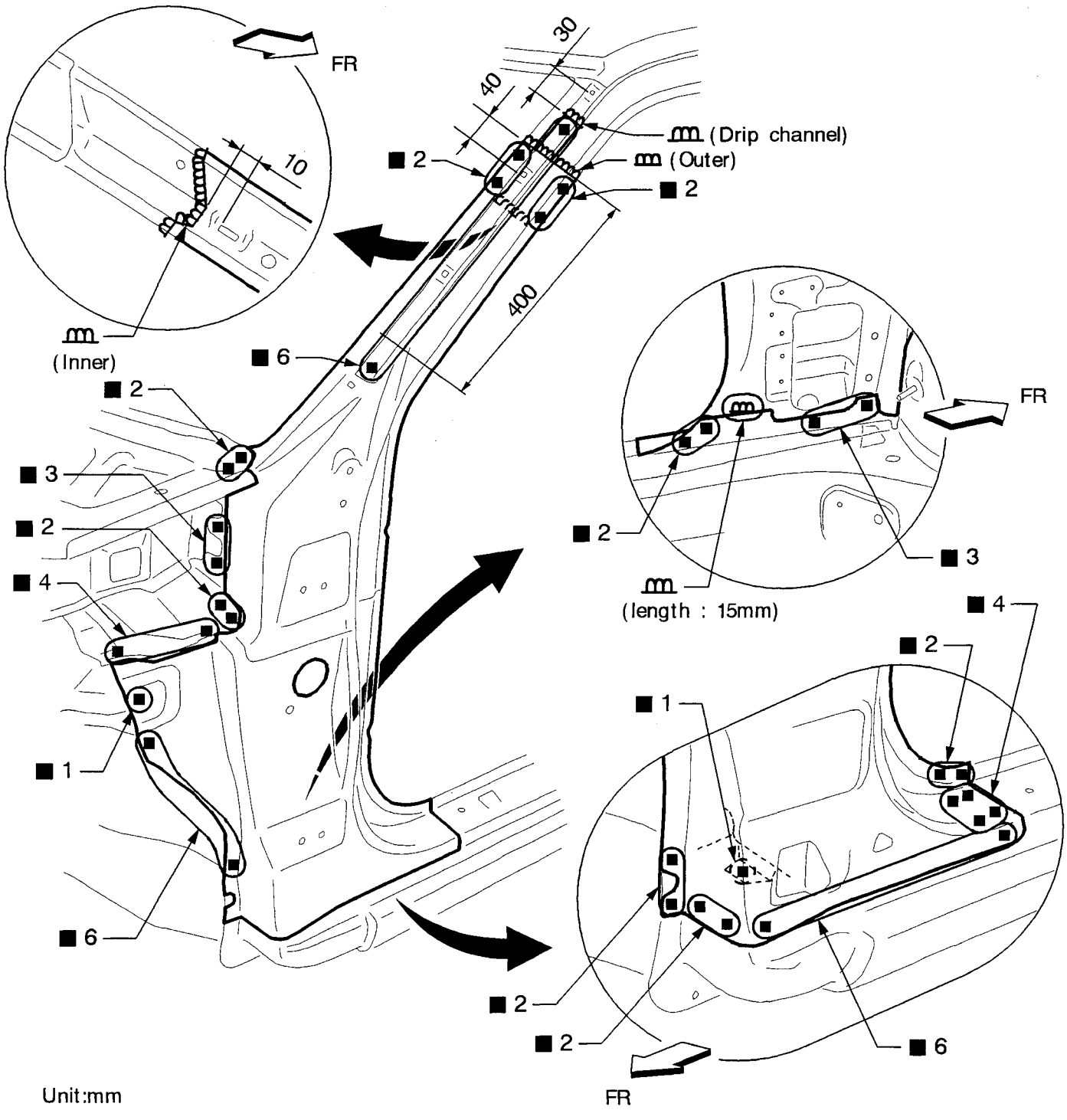

2-spot welds 3-spot welds M.I.G plug weld For 3 panels plug weld method ■ A ■ B M.I.G seam weld/ Point weld

Simpo PDF Merge and Split Unregistered Version - http://www.simpopdf.com

Center Pillar

Sedan
5-door hatchback

Service Joint

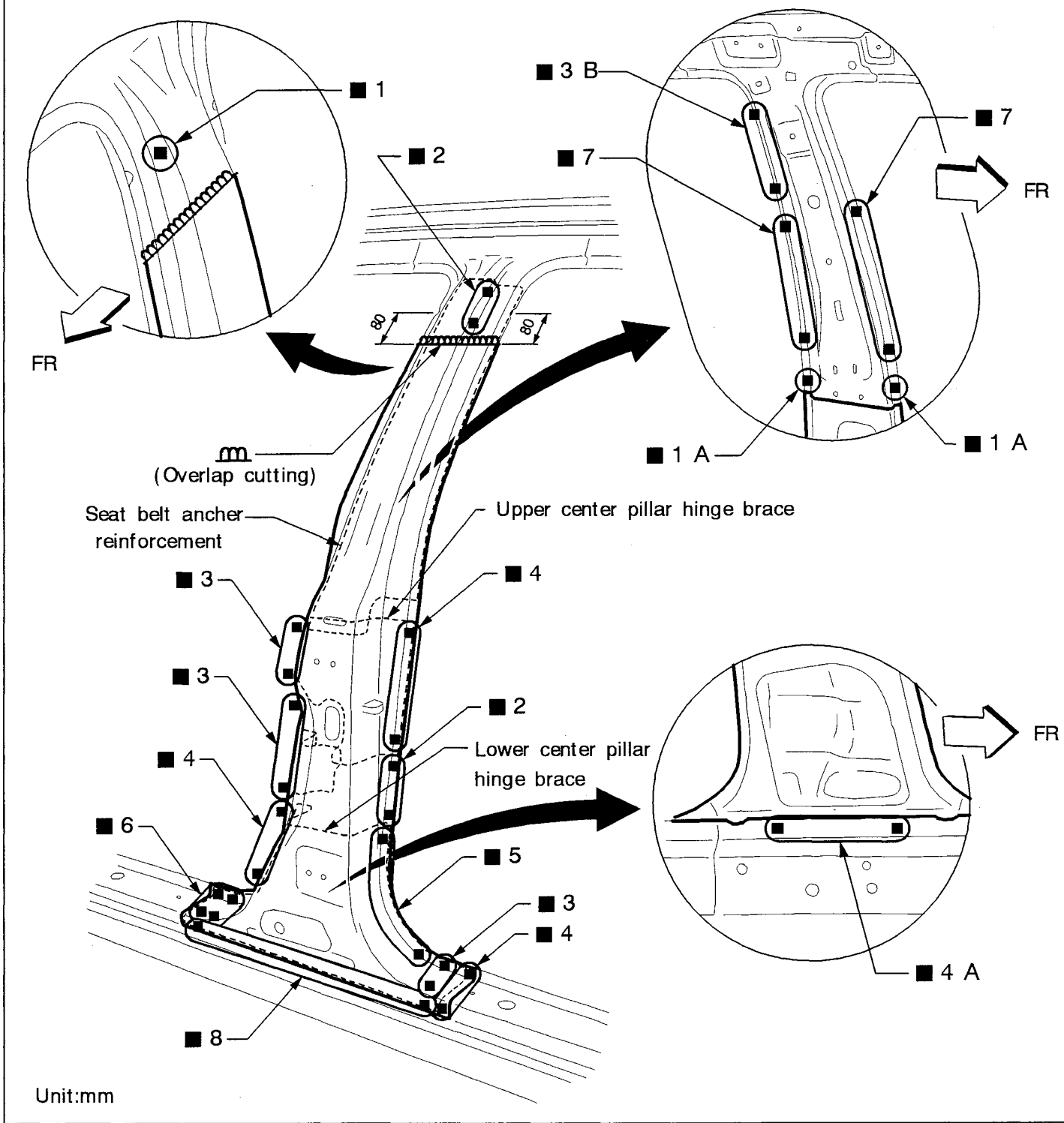

2-spot welds 3-spot welds M.I.G plug weld For 3 panels plug weld method ■ A ■ B M.I.G seam weld/ Point weld

Outer Sill

Sedan
5-door hatchback

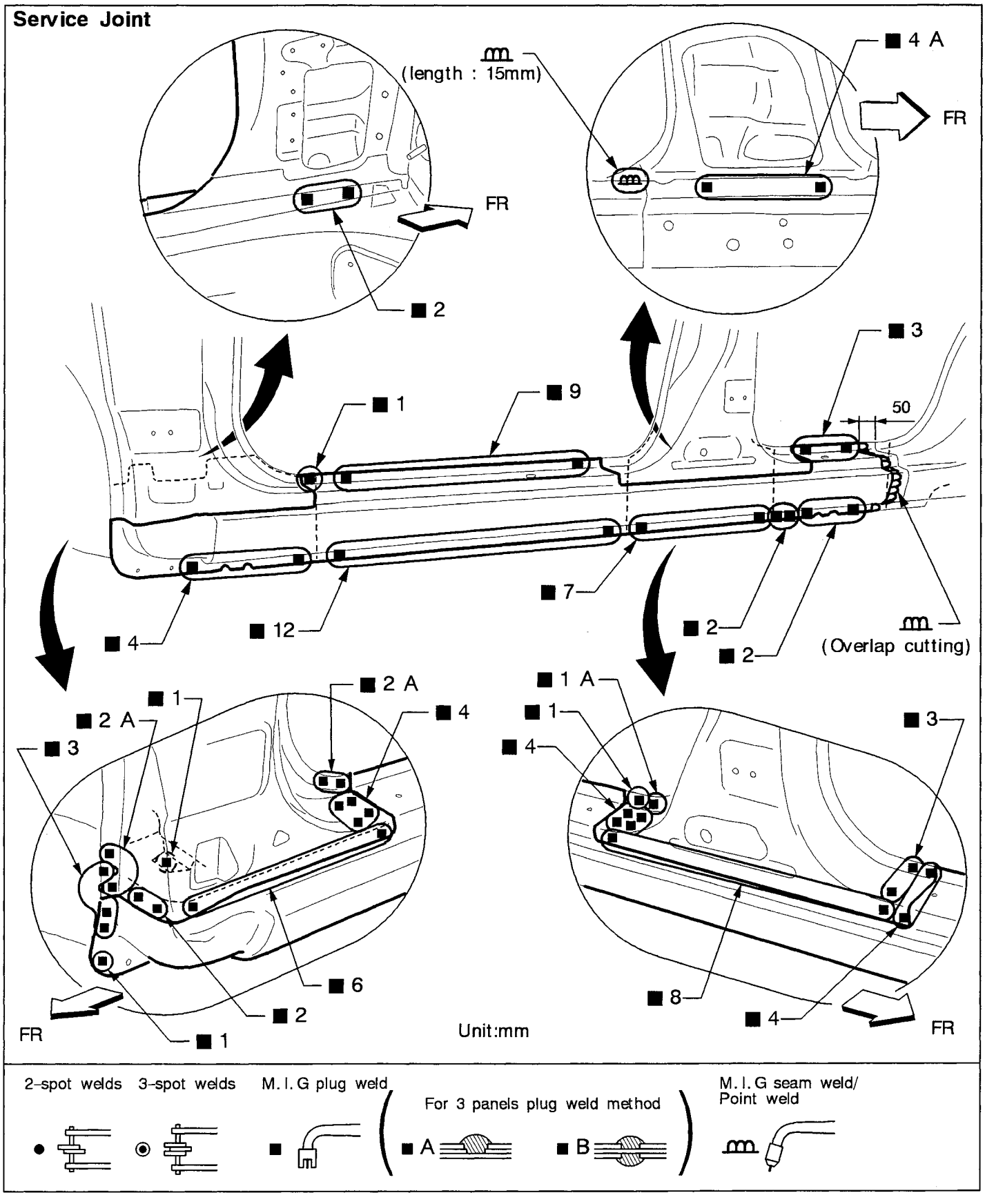

Simpo PDF Merge and Split Unregistered Version - http://www.simpopdf.com

Outer Sill

3-door hatchback

Service Joint

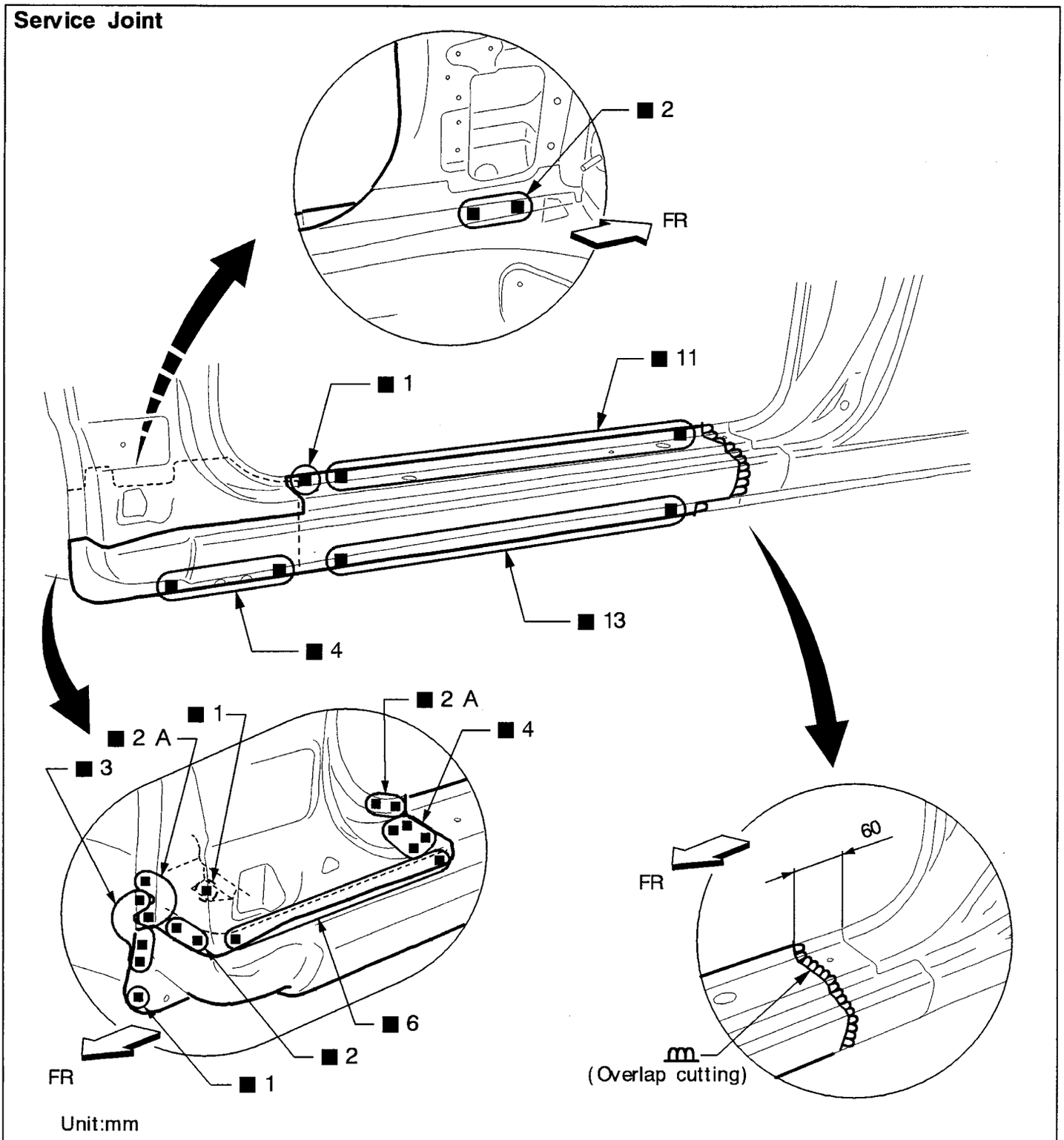

Unit:mm

2-spot welds 3-spot welds M.I.G plug weld For 3 panels plug weld method ■ A ■ B M.I.G seam weld/ Point weld

Rear Fender

Sedan

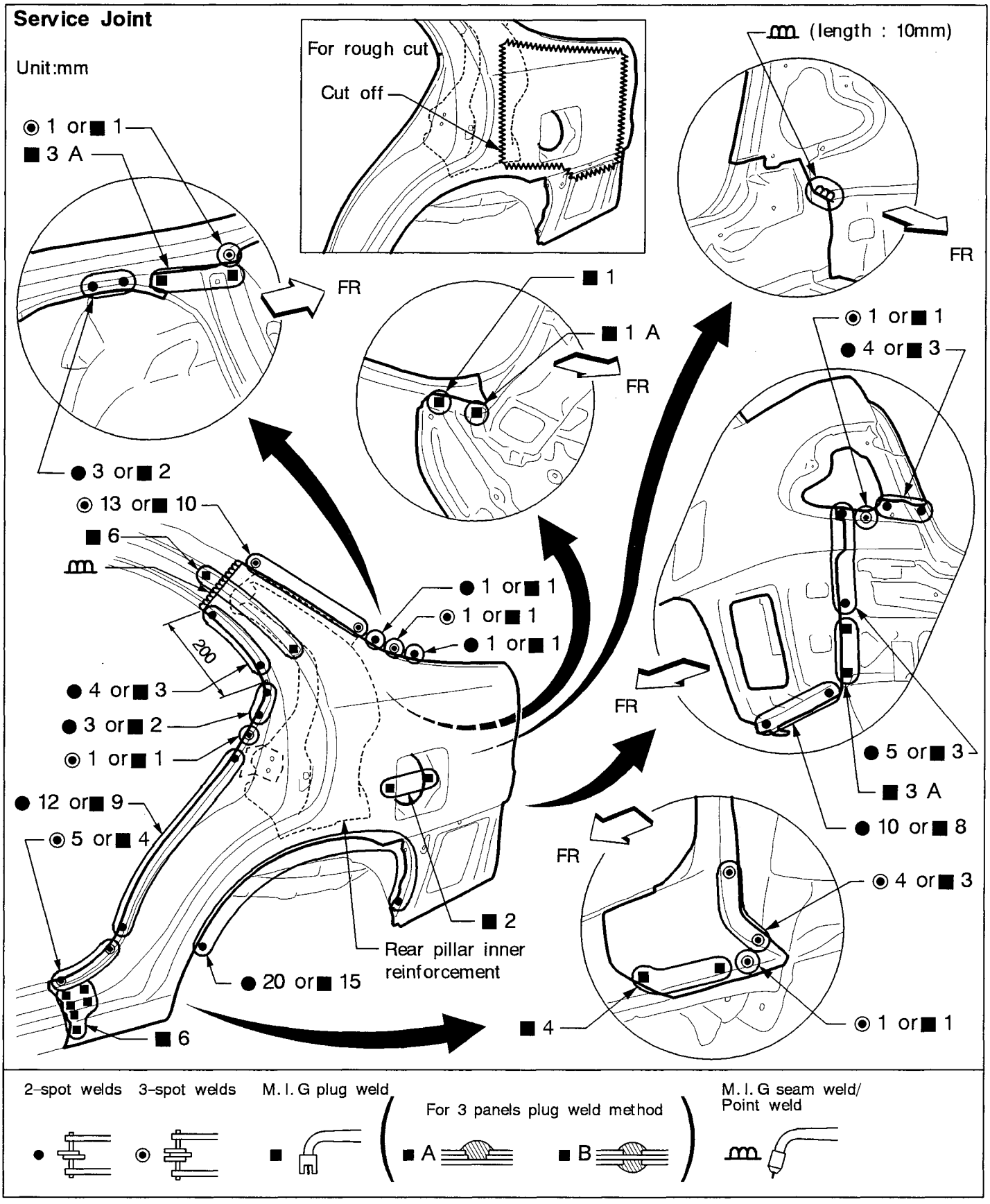

Simpo PDF Merge and Split Unregistered Version - http://www.simpopdf.com

Rear Fender

5-door hatchback

Service Joint

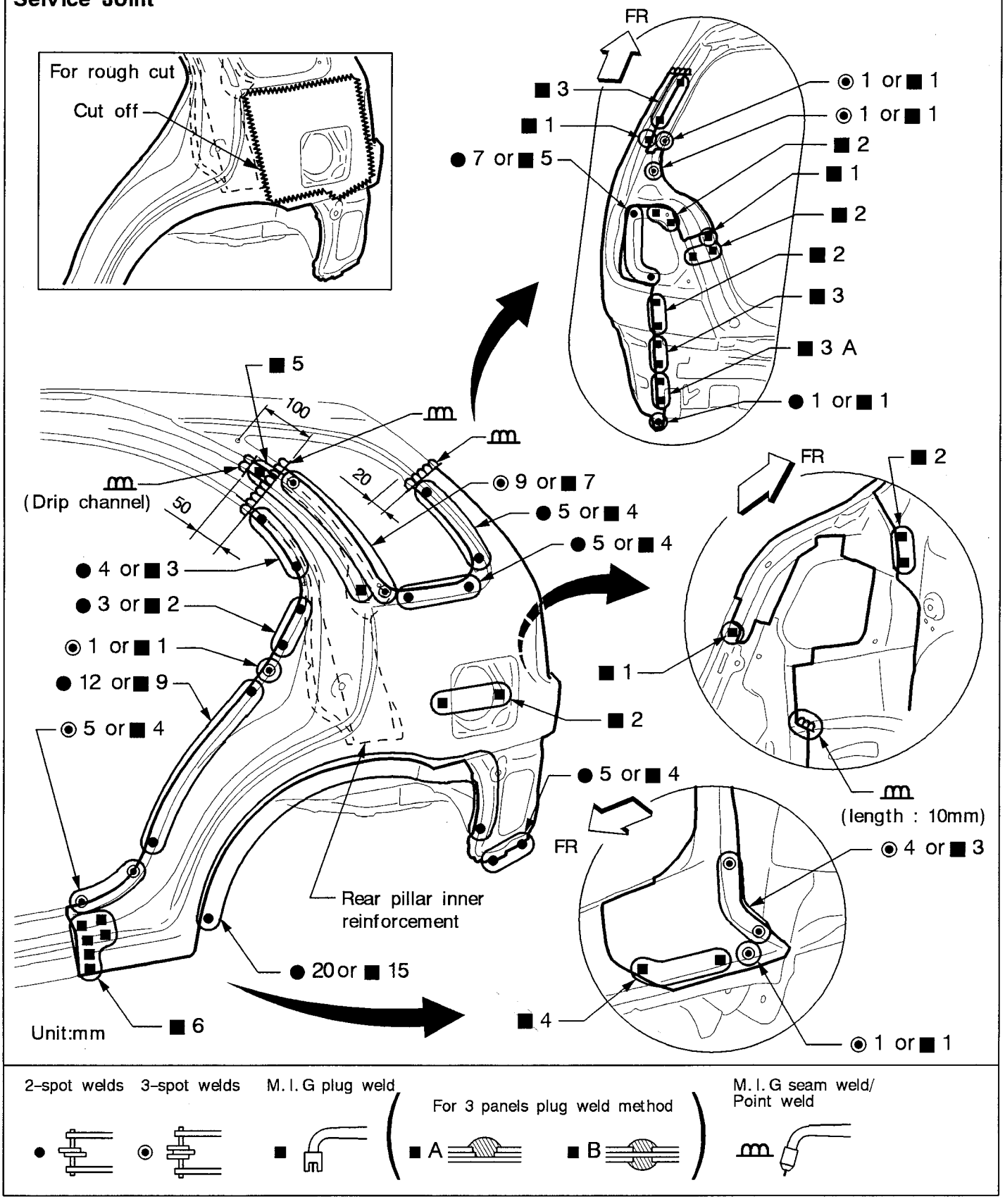

Rear Fender

3-door hatchback

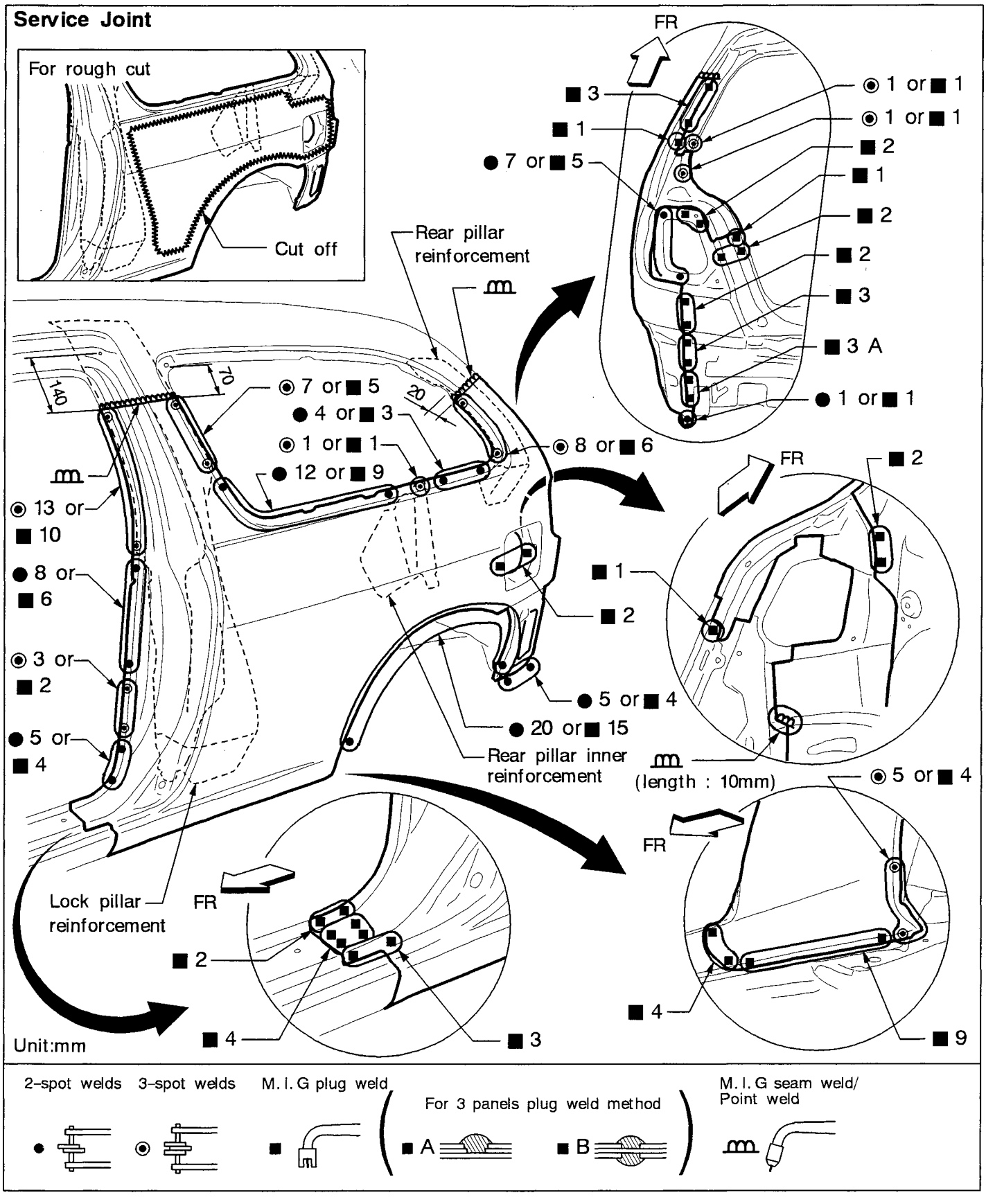

Simpo PDF Merge and Split Unregistered Version - http://www.simpopdf.com

Rear Floor Rear

(Work after rear panel have been removed.)

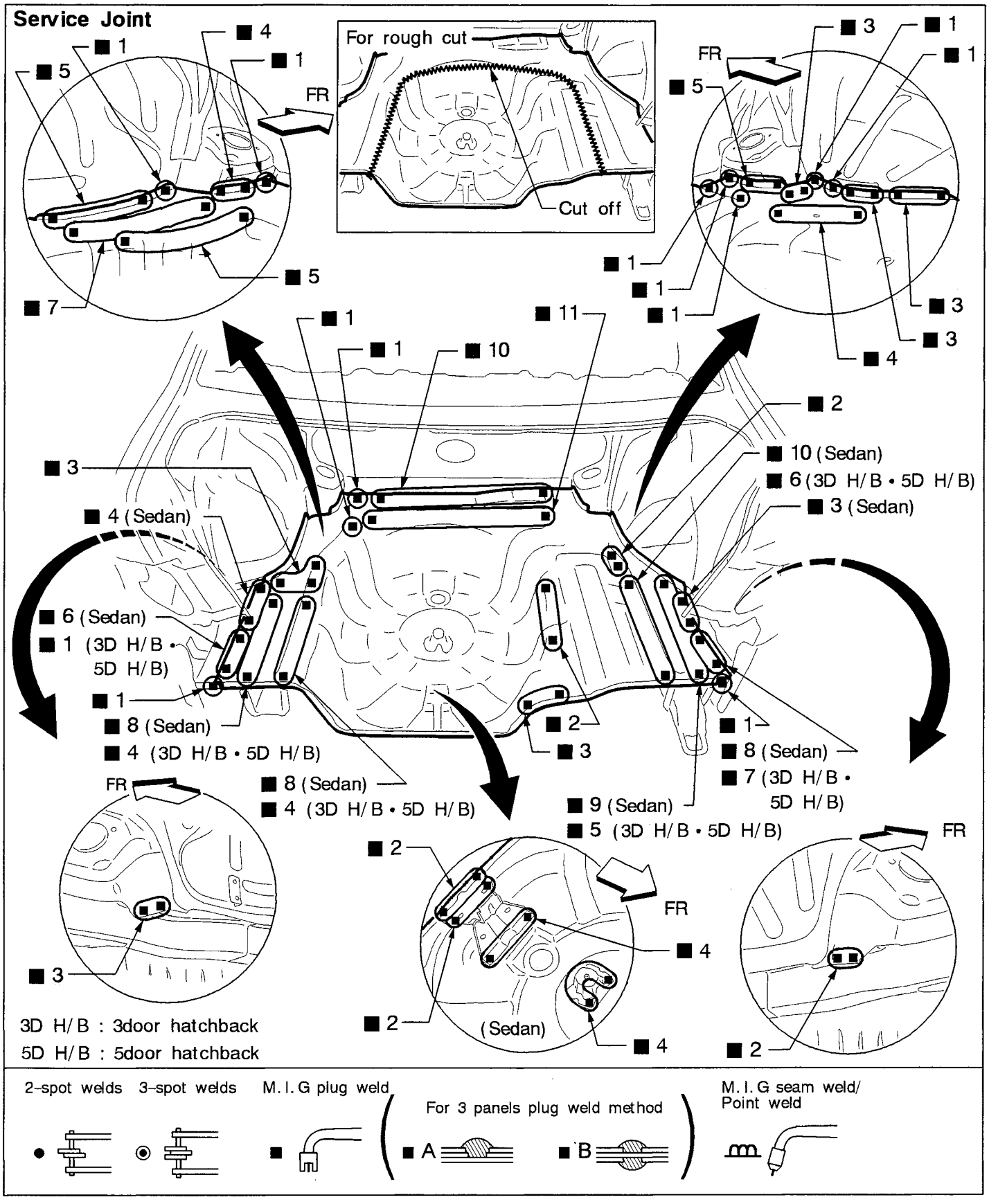

Rear Side Member Extension

Sedan

Service Joint

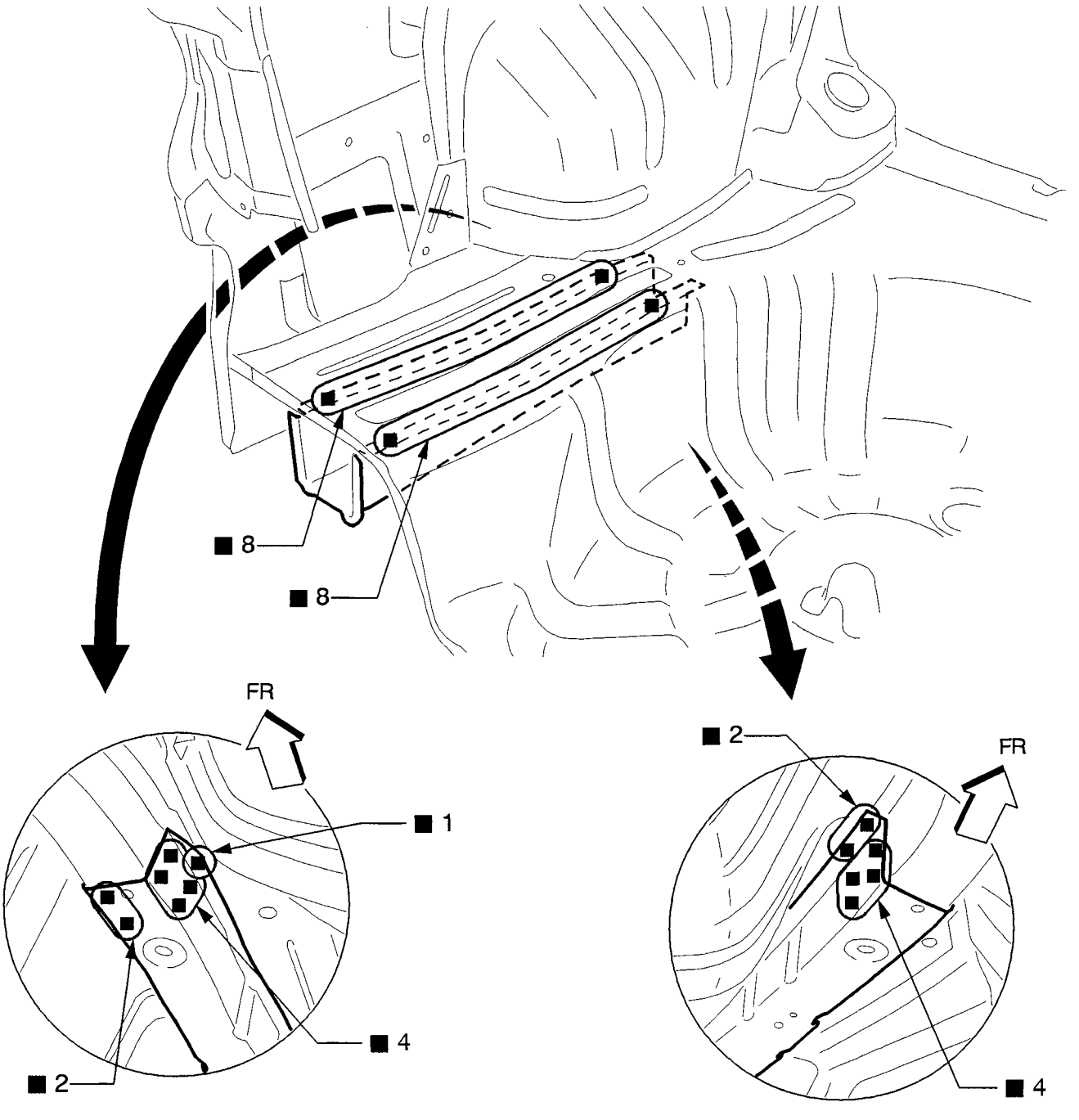

2-spot welds 3-spot welds M. I. G plug weld For 3 panels plug weld method ■ A ■ B M. I. G seam weld/ Point weld

Simpo PDF Merge and Split Unregistered Version - http://www.simpopdf.com

Rear Side Member Extension

3-door hatchback
5-door hatchback

Service Joint
(This figure show left side member extension)

LH : Left side
RH : Right side

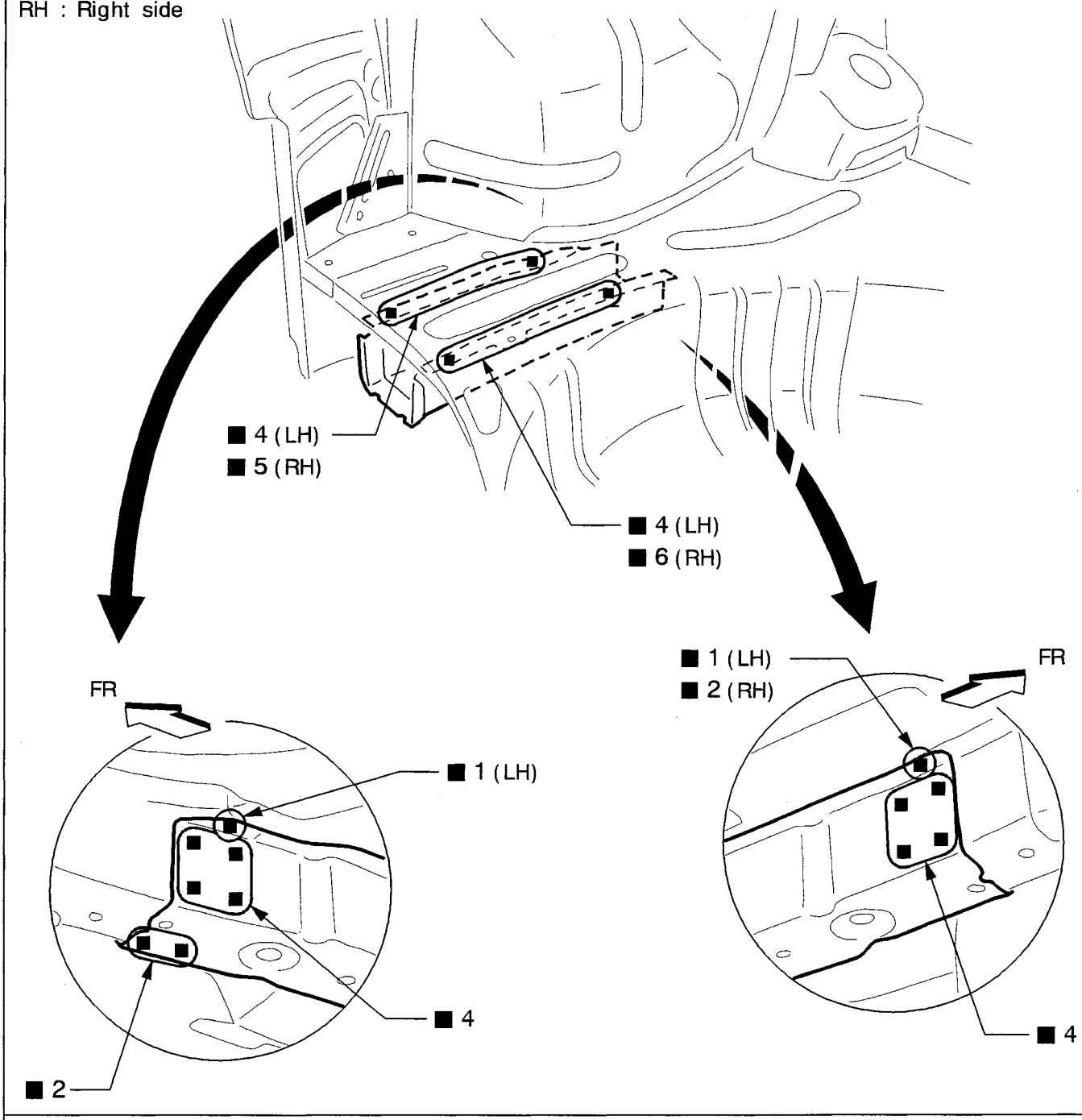

2-spot welds 3-spot welds M. I. G plug weld For 3 panels plug weld method M. I. G seam weld/ Point weld

■ A ■ B

Simpo PDF Merge and Split Unregistered Version - http://www.simpopdf.com

ENGINE CONTROL SYSTEM

SECTION EC

CONTENTS

PRECAUTIONS AND PREPARATION 4
- Special Service Tools 4
- Supplemental Restraint System (SRS) "AIR BAG" (Dual Air Bag System) 7
- Supplemental Restraint System (SRS) "AIR BAG" (Single Air Bag System) 7

GA, SR

PRECAUTIONS AND PREPARATION 8
- Engine Fuel & Emission Control System 8
- Precautions for ECCS Trouble Diagnosis of Engine 9
- Precautions 9

GA

ENGINE AND EMISSION CONTROL OVERALL SYSTEM 11
- Circuit Diagram — Except for Australia 11
- Circuit Diagram — For Australia 12
- System Diagram — GA14DE, GA16DE for Europe and Israel 13
- System Diagram — GA15DE 14
- System Diagram — GA16DE except for Europe, Israel and Australia 15
- System Diagram — GA16DE for Australia 16
- ECCS Component Parts Location — GA14DE, GA16DE for Europe and Israel 17
- ECCS Component Parts Location — GA15DE 18
- ECCS Component Parts Location — GA16DE except for Europe, Israel and Australia 19
- ECCS Component Parts Location — GA16DE for Australia 20
- ECCS Component Parts Location 21
- Vacuum Hose Drawing 22

ENGINE AND EMISSION BASIC CONTROL SYSTEM DESCRIPTION 23
- System Chart 23
- Multiport Fuel Injection (MFI) System 24
- Distributor Ignition (DI) System 27
- Air Conditioning Cut Control 28
- Fuel Cut Control (at no load & high engine speed) 28

EVAPORATIVE EMISSION SYSTEM 29
- Inspection 29

POSITIVE CRANKCASE VENTILATION 31
- Description 31
- Inspection 32

BASIC SERVICE PROCEDURE 33
- Fuel Pressure Release 33
- Fuel Pressure Check 33
- Fuel Pressure Regulator Check 33
- Injector Removal and Installation 34
- Idle Speed/Ignition Timing/Idle Mixture Ratio Adjustment 35

ON-BOARD DIAGNOSTIC SYSTEM DESCRIPTION 44
- Malfunction Indicator Lamp (MIL) 44
- CONSULT 48

TROUBLE DIAGNOSIS — General Description 58
- Introduction 58
- Work Flow 59
- Description for Work Flow 60
- Diagnostic Worksheet 61
- Diagnostic Trouble Code (DTC) Chart 62
- Fail-Safe Chart 64
- Basic Inspection 65
- Fast Idle Cam (FIC) Inspection and Adjustment — For Europe and Israel 68
- Fast Idle Cam (FIC) Inspection and Adjustment — Except for Europe and Israel 68
- Symptom Matrix Chart 71

Simpo PDF Merge and Split Unregistered Version - http://www.simpopdf.com

CONTENTS (Cont'd.)

CONSULT Reference Value in Data Monitor Mode 74
Major Sensor Reference Graph in Data Monitor Mode 76
ECM Terminals and Reference Value 78
TROUBLE DIAGNOSIS FOR POWER SUPPLY 88
Main Power Supply and Ground Circuit 88
TROUBLE DIAGNOSIS FOR DTC 11 94
Camshaft Position Sensor (CMPS) 94
TROUBLE DIAGNOSIS FOR DTC 12 101
Mass Air Flow Sensor (MAFS) 101
TROUBLE DIAGNOSIS FOR DTC 13 108
Engine Coolant Temperature Sensor (ECTS) 108
TROUBLE DIAGNOSIS FOR DTC 21 113
Ignition Signal 113
TROUBLE DIAGNOSIS FOR DTC 34 119
Knock Sensor (KS) 119
TROUBLE DIAGNOSIS FOR DTC 41 124
Intake Air Temperature Sensor (IATS) 124
TROUBLE DIAGNOSIS FOR NON-DETECTABLE ITEMS 128
Throttle Position Sensor 128
Vehicle Speed Sensor (VSS) 133
Start Signal 138
Injector 141
Fuel Pump 145
Idle Air Control Valve (IACV) — Auxiliary Air Control (AAC) Valve 150
Cooling Fan Control 156
Power Steering Oil Pressure Switch 169
Park/Neutral Position Switch 173
EVAP Canister Purge Control Solenoid Valve 179
EGR Valve and EVAP Canister Purge Control Solenoid Valve 183
Heated Oxygen Sensor (HO2S) 189
Oxygen Sensor (O2S) 194
Valve Timing Control (VTC) 198
IACV-FICD Solenoid Valve 204
Electrical Load Signal 211
Torque Converter Clutch Solenoid Valve 219
MIL & Data Link Connectors 223

SR

ENGINE AND EMISSION CONTROL OVERALL SYSTEM 226
Circuit Diagram 226
System Diagram 227
ECCS Component Parts Location 228
Vacuum Hose Drawing 231
System Chart 232
ENGINE AND EMISSION BASIC CONTROL SYSTEM DESCRIPTION 233
Multiport Fuel Injection (MFI) System 233
Distributor Ignition (DI) System 235
Air Conditioning Cut Control 236
Fuel Cut Control (at no load & high engine speed) 237
EVAPORATIVE EMISSION SYSTEM 238
Description 238
Inspection 238
POSITIVE CRANKCASE VENTILATION 240
Description 240
Inspection 240
BASIC SERVICE PROCEDURE 241
Fuel Pressure Release 241
Fuel Pressure Check 241
Fuel Pressure Regulator Check 242
Injector Removal and Installation 242
Idle Speed/Ignition Timing/Idle Mixture Ratio Adjustment 243
ON-BOARD DIAGNOSTIC SYSTEM DESCRIPTION 250
Malfunction Indicator Lamp (MIL) 250
CONSULT 254
TROUBLE DIAGNOSIS — General Description 264
Introduction 264
Work Flow 265
Description for Work Flow 266
Diagnostic Worksheet 267
Diagnostic Trouble Code (DTC) Chart 268
Fail-Safe Chart 270
Basic Inspection 271
Symptom Matrix Chart 274
CONSULT Reference Value in Data Monitor Mode 277
Major Sensor Reference Graph in Data Monitor Mode 279
ECM Terminals and Reference Value 281
TROUBLE DIAGNOSIS FOR POWER SUPPLY 286
Main Power Supply and Ground Circuit 286
TROUBLE DIAGNOSIS FOR DTC 11 289
Camshaft Position Sensor (CMPS) 289
TROUBLE DIAGNOSIS FOR DTC 12 293
Mass Air Flow Sensor (MAFS) 293
TROUBLE DIAGNOSIS FOR DTC 13 297
Engine Coolant Temperature Sensor (ECTS) 297
TROUBLE DIAGNOSIS FOR DTC 21 301
Ignition Signal 301
TROUBLE DIAGNOSIS FOR DTC 34 306
Knock Sensor (KS) 306

Simpo PDF Merge and Split Unregistered Version - http://www.simpopdf.com

CONTENTS (Cont'd.)

TROUBLE DIAGNOSIS FOR DTC 43 309
Throttle Position Sensor 309
TROUBLE DIAGNOSIS FOR NON-DETECTABLE ITEMS 314
Vehicle Speed Sensor (VSS) 314
Start Signal 317
Exhaust Gas Recirculation (EGR) Valve and EVAP Canister Purge Control 319
Injector 324
Fuel Pump 327
Idle Air Control Valve (IACV)-Air Regulator 332
Idle Air Control Valve (IACV) — Auxiliary Air Control (AAC) Valve 335
Idle Air Control Valve (IACV)-FICD Solenoid Valve 339
Cooling Fan Control 343
Power Steering Oil Pressure Switch 354
Park/Neutral Position Switch 357
Heated Oxygen Sensor (HO2S) 362
Torque Converter Clutch Solenoid Valve 367
Malfunction Indicator Lamp (MIL) & Data Link Connector (DLC) for CONSULT 370

CD

INJECTION SYSTEM 371
VE-TYPE INJECTION PUMP 372
Removal 372
Installation 373
Adjustment 374
INJECTION NOZZLE 376
Removal and Installation 376
Disassembly 376
Inspection 377
Cleaning 377
Assembly 378
Test and Adjustment 379

FUEL SYSTEM CHECK 381
Priming Pump Check 381
Fuel Cut Solenoid Valve 381
CRANKCASE VENTILATION SYSTEM 382
Ventilation Hose 382
ENGINE AND EMISSION CONTROL OVERALL SYSTEM 383
Component Parts Location 383
System Diagram 384
Circuit Diagram 385
System Chart 386
TROUBLE DIAGNOSES 387
ECM Terminals and Reference Values 387
Quick-glow System 390
Partial Load Advance (PLA) Control 399
Cooling Fan Control 404
Air Conditioner Cut Control 413
Fuel Cut Control 416

GA

SERVICE DATA AND SPECIFICATIONS (SDS) 417
General Specifications 417
Inspection and Adjustment 417

SR

SERVICE DATA AND SPECIFICATIONS (SDS) 418
General Specifications 418
Inspection and Adjustment 418

CD

SERVICE DATA AND SPECIFICATIONS (SDS) 419
VE-type Injection Pump 419
Injection Nozzle 419

EC

When you read wiring diagrams:
- **Read GI section, "HOW TO READ WIRING DIAGRAMS".**
- **See EL section, "POWER SUPPLY ROUTING" for power distribution circuit.**

When you perform trouble diagnoses, read GI section, "HOW TO FOLLOW FLOW CHART IN TROUBLE DIAGNOSES" and "HOW TO PERFORM EFFICIENT DIAGNOSIS FOR AN ELECTRICAL INCIDENT".

Simpo PDF Merge and Split Unregistered Version - http://www.simpopdf.com

Special Service Tools

Tool number Tool name	Description	Engine application	
		SR	GA
EG11140000 Ignition coil adapter harness	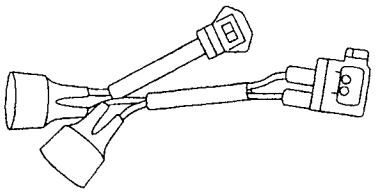 NT338 Measuring engine speed	X	X
KV10117100 Heated oxygen sensor wrench	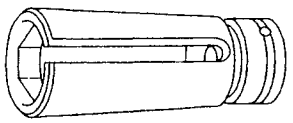 NT630 Loosening or tightening heated oxygen sensor	—	X
KV10114400 Oxygen sensor wrench	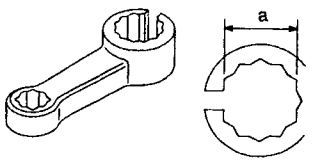 NT636 Loosening or tightening heated oxygen sensor **a: 22 mm (0.87 in)**	X	—

FOR CD ENGINE VE-TYPE INJECTION PUMP

Adjusting device on vehicle

Tool number Tool name	Description
KV11229352 Measuring device ① KV11229350 Holder ② KV11229360 Nut ③ KV11229370 Pin ④ KV11254410 Dial gauge	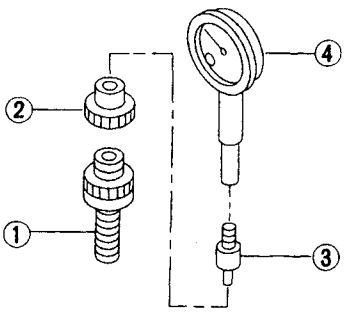 NT570 Measuring set length of plunger spring
KV11102900 Pulley puller	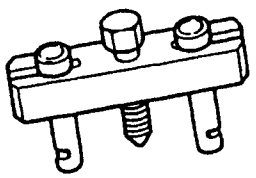 NT647 Removing injection pump sprocket

Simpo PDF Merge and Split Unregistered Version - http://www.simpopdf.com

Special Service Tools (Cont'd)

FOR CD ENGINE INJECTION NOZZLE

Tool number Tool name	Description
KV11289004 Nozzle cleaning kit ① KV11290012 Box ② KV11290110 Brush ③ KV11290122 Nozzle oil sump scraper ④ KV11290140 Nozzle needle tip cleaner ⑤ KV11290150 Nozzle seat scraper ⑥ KV11290210 Nozzle holder ⑦ KV11290220 Nozzle hole cleaning needle	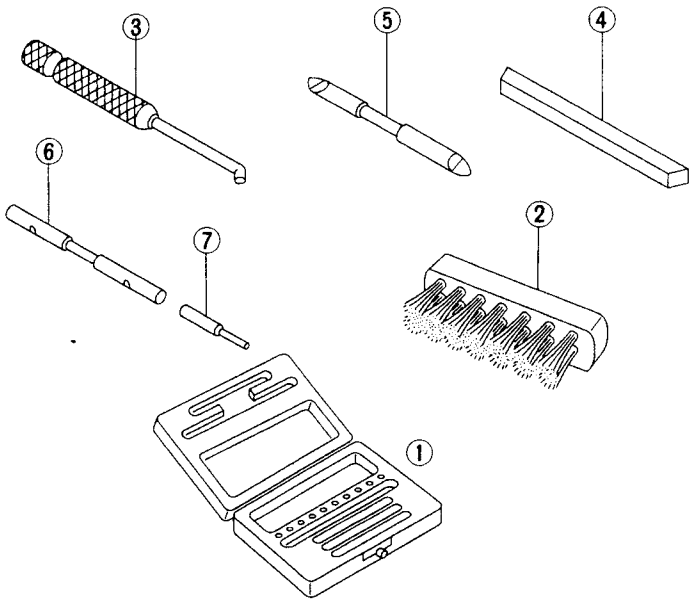 NT296
KV11292010 Nozzle centering device	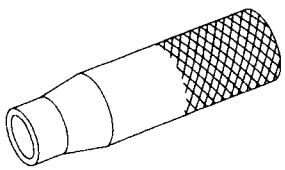 NT293
KV11100300 Nozzle holder socket	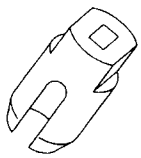 NT563

EC

Simpo PDF Merge and Split Unregistered Version - http://www.simpopdf.com

NOTE

Simpo PDF Merge and Split Unregistered Version - http://www.simpopdf.com

Supplemental Restraint System (SRS) "AIR BAG" (Dual Air Bag System)

The Supplemental Restraint System "Air Bag", used along with a seat belt, helps to reduce the risk or severity of injury to the driver and front passenger in a frontal collision. The Supplemental Restraint System consists of air bag modules (located in the center of the steering wheel and on the instrument panel on the passenger side), a diagnosis sensor unit, warning lamp, wiring harness and spiral cable. Information necessary to service the system safely is included in the **RS section** of this Service Manual.

WARNING:

- **To avoid rendering the SRS inoperative, which could increase the risk of personal injury or death in the event of a collision which would result in air bag inflation, all maintenance must be performed by an authorized NISSAN dealer.**
- **Improper maintenance, including incorrect removal and installation of the SRS, can lead to personal injury caused by unintentional activation of the system.**
- **Do not use electrical test equipment on any circuit related to the SRS unless instructed to in this Service Manual. SRS wiring harnesses are covered with yellow insulation either just before the harness connectors or for the complete harness, for easy identification.**

Supplemental Restraint System (SRS) "AIR BAG" (Single Air Bag System)

The Supplemental Restraint System "Air Bag", used along with a seat belt, helps to reduce the risk or severity of injury to the driver in a frontal collision. The Supplemental Restraint System consists of an air bag module (located in the center of the steering wheel), a diagnosis sensor unit, warning lamp, wiring harness and spiral cable. Information necessary to service the system safely is included in the **RS section** of this Service Manual.

WARNING:

- **To avoid rendering the SRS inoperative, which could increase the risk of personal injury or death in the event of a collision which would result in air bag inflation, all maintenance must be performed by an authorized NISSAN dealer.**
- **Improper maintenance, including incorrect removal and installation of the SRS, can lead to personal injury caused by unintentional activation of the system.**
- **Do not use electrical test equipment on any circuit related to the SRS unless instructed to in this Service Manual.**

Simpo PDF Merge and Split Unregistered Version - http://www.simpopdf.com

Engine Fuel & Emission Control System

BATTERY
- Always use a 12 volt battery as power source.
- Do not attempt to disconnect battery cables while engine is running.

INJECTOR
- Do not disconnect injector harness connectors with engine running.
- Do not apply battery power directly to injectors.

ECM
- Do not disassembly ECM (ECCS control module).
- Do not turn diagnosis mode selector forcibly.
- If a battery terminal is disconnected, the memory will return to the ECM value.
  The ECM will now start to self-control at its initial value. Engine operation can vary slightly when the terminal is disconnected. However, this is not an indication of a problem. Do not replace parts because of a slight variation.

WIRELESS EQUIPMENT
- When installing C.B. ham radio or a mobile phone, be sure to observe the following as it may adversely affect electronic control systems depending on its installation location.

1) Keep the antenna as far as possible away from the ECM.
2) Keep the antenna feeder line more than 20 cm (7.9 in) away from the harness of electronic controls.
   Do not let them run parallel for a long distance.
3) Adjust the antenna and feeder line so that the standing-wave ratio can be kept smaller.
4) Be sure to ground the radio to vehicle body.

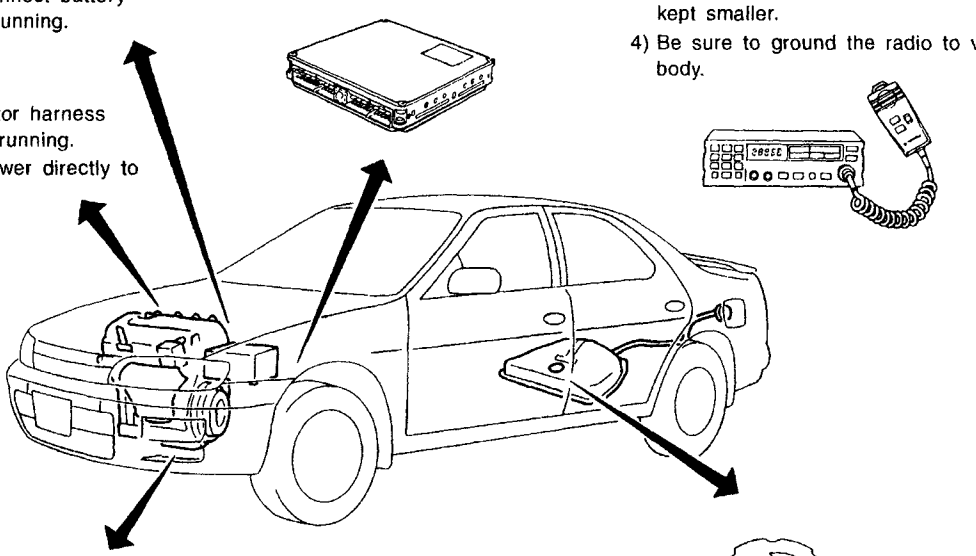

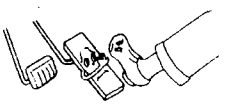

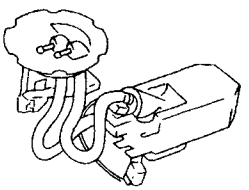

ECCS PARTS HANDLING
- Handle mass air flow sensor carefully to avoid damage.
- Do not disassemble mass air flow sensor.
- Do not clean mass air flow sensor with any type of detergent.
- Do not disassemble IACV-AAC valve.
- Even a slight leak in the air intake system can cause serious problems.
- Do not shock or jar the camshaft position sensor.

WHEN STARTING
- Do not depress accelerator pedal when starting.
- Immediately after starting, do not rev up engine unnecessarily.
- Do not rev up engine just prior to shutdown.

FUEL PUMP
- Do not operate fuel pump when there is no fuel in lines.
- Tighten fuel hose clamps to the specified torque.

ECCS HARNESS HANDLING
- Securely connect ECCS harness connectors.
  A poor connection can cause an extremely high (surge) voltage to develop in coil and condenser, thus resulting in damage to ICs.
- Keep ECCS harness at least 10 cm (3.9 in) away from adjacent harnesses, to prevent an ECCS system malfunction due to receiving external noise, degraded operation of ICs, etc.
- Keep ECCS parts and harnesses dry.
- Before removing parts, turn off ignition switch and then disconnect battery ground cable.

SEF320R

Simpo PDF Merge and Split Unregistered Version - http://www.simpopdf.com

Precautions for ECCS Trouble Diagnosis of Engine

CAUTION:

- **Be sure to turn the ignition switch "OFF" and disconnect the negative battery terminal before any repair or inspection work. The open/short circuit of related switches, sensors, solenoid valves, etc. will cause malfunction.**
- **Be sure to connect and lock the connectors securely after work. A loose (unlocked) connector will cause malfunction due to the open circuit. (Be sure the connector is free from water, grease, dirt, bent terminals, etc.)**
- **Be sure to route and clamp the harnesses properly after work. The interference of the harness with a bracket, etc. may cause malfunction due to the short circuit.**
- **Be sure to connect rubber tubes properly after work. A misconnected or disconnected rubber tube may cause malfunction.**
- **Be sure to erase the unnecessary malfunction information (repairs completed) in the ECM before returning the vehicle to the customer.**

EC

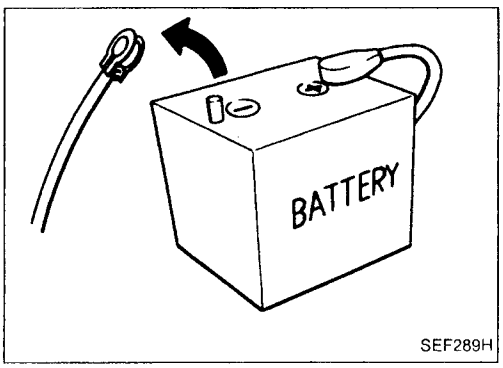

SEF289H

Precautions

- **Before connecting or disconnecting the ECM harness connector, turn ignition switch OFF and disconnect negative battery terminal. Failure to do so may damage the ECM because battery voltage is applied to ECM even if ignition switch is turned off.**

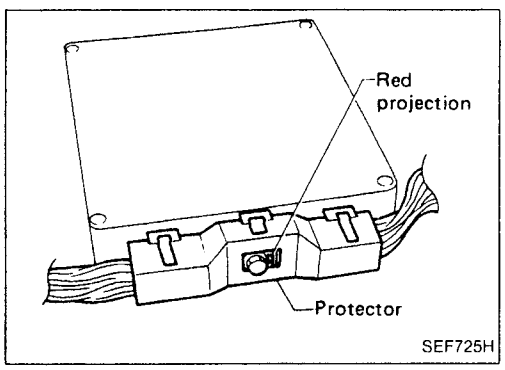

SEF725H

- **When connecting ECM harness connector, tighten securing bolt until red projection is in line with connector face.**

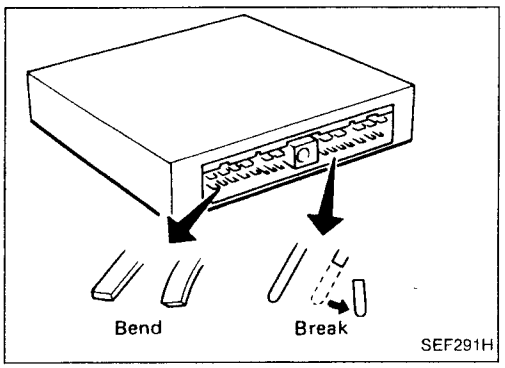

SEF291H

- **When connecting or disconnecting pin connectors into or from ECM, take care not to damage pin terminals (bend or break).**
  Make sure that there are not any bends or breaks on ECM pin terminal, when connecting pin connectors.

Simpo PDF Merge and Split Unregistered Version - http://www.simpopdf.com

Precautions (Cont'd)

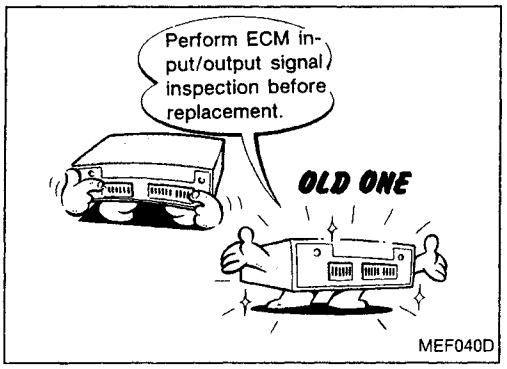

MEF040D

- **Before replacing ECM, perform Terminals and Reference Value inspection and make sure ECM functions properly. Refer to EC-281 for SR engine model and EC-78 for GA engine model.**

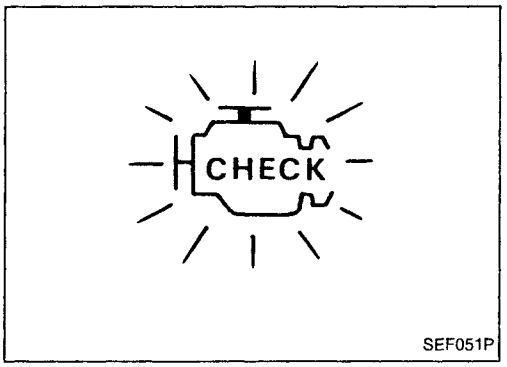

SEF051P

- **After performing each TROUBLE DIAGNOSIS, perform "OVERALL FUNCTION CHECK" or "DTC (Diagnostic Trouble Code) CONFIRMATION PROCEDURE".**
  The DTC should not be displayed in the "DTC CONFIRMATION PROCEDURE" if the repair is completed. The "OVERALL FUNCTION CHECK" should be a good result if the repair is completed.

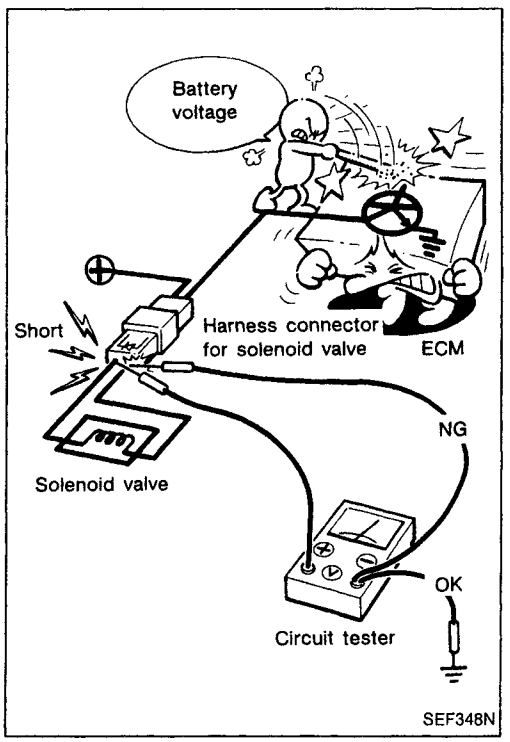

SEF348N

- **When measuring ECM signals with a circuit tester, never allow the two tester probes to contact.**
  Accidental contact of probes will cause a short circuit and damage the ECM power transistor.

Simpo PDF Merge and Split Unregistered Version - http://www.simpopdf.com

Circuit Diagram — Except for Australia

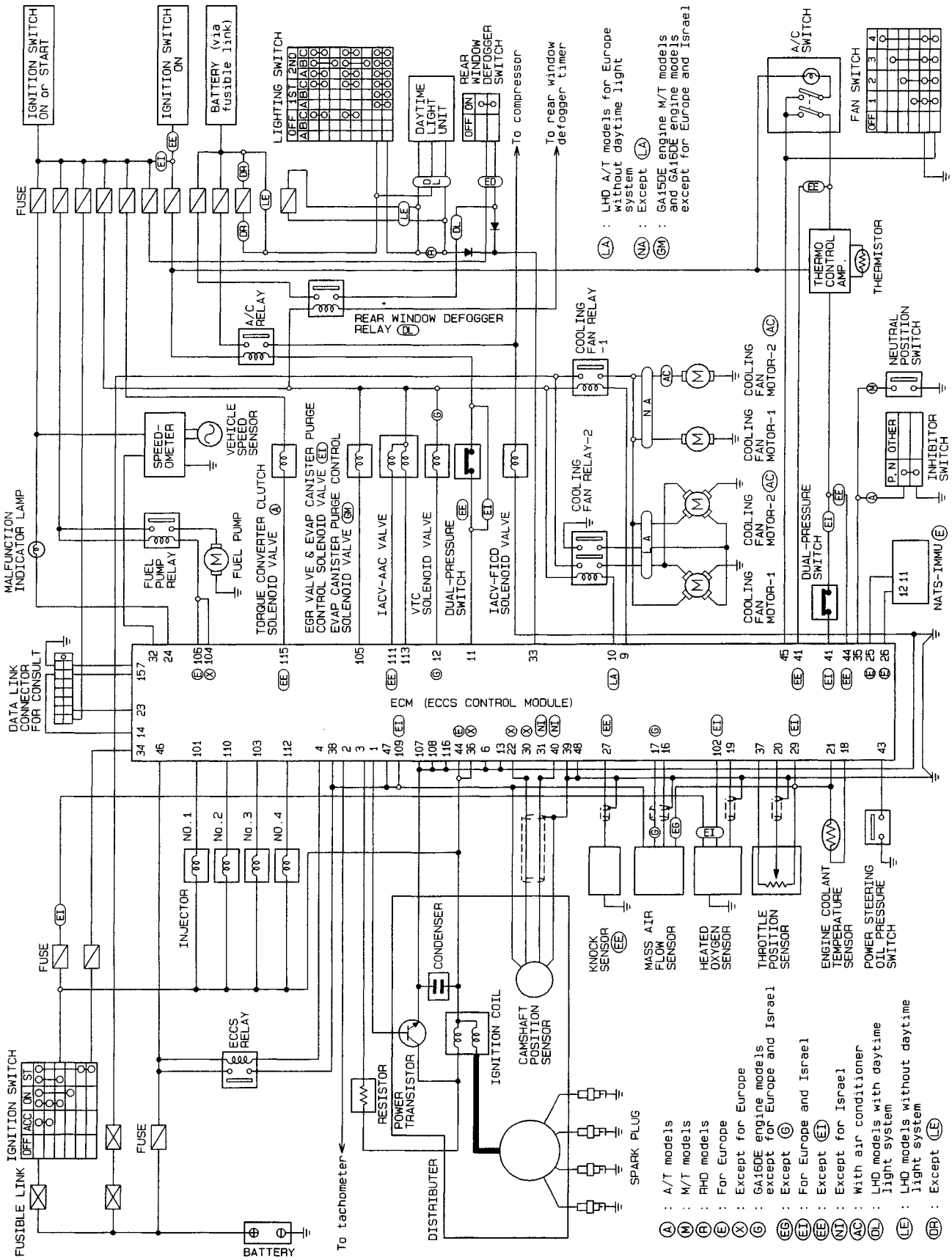

HEC060

Simpo PDF Merge and Split Unregistered Version - http://www.simopdf.com

Circuit Diagram — For Australia

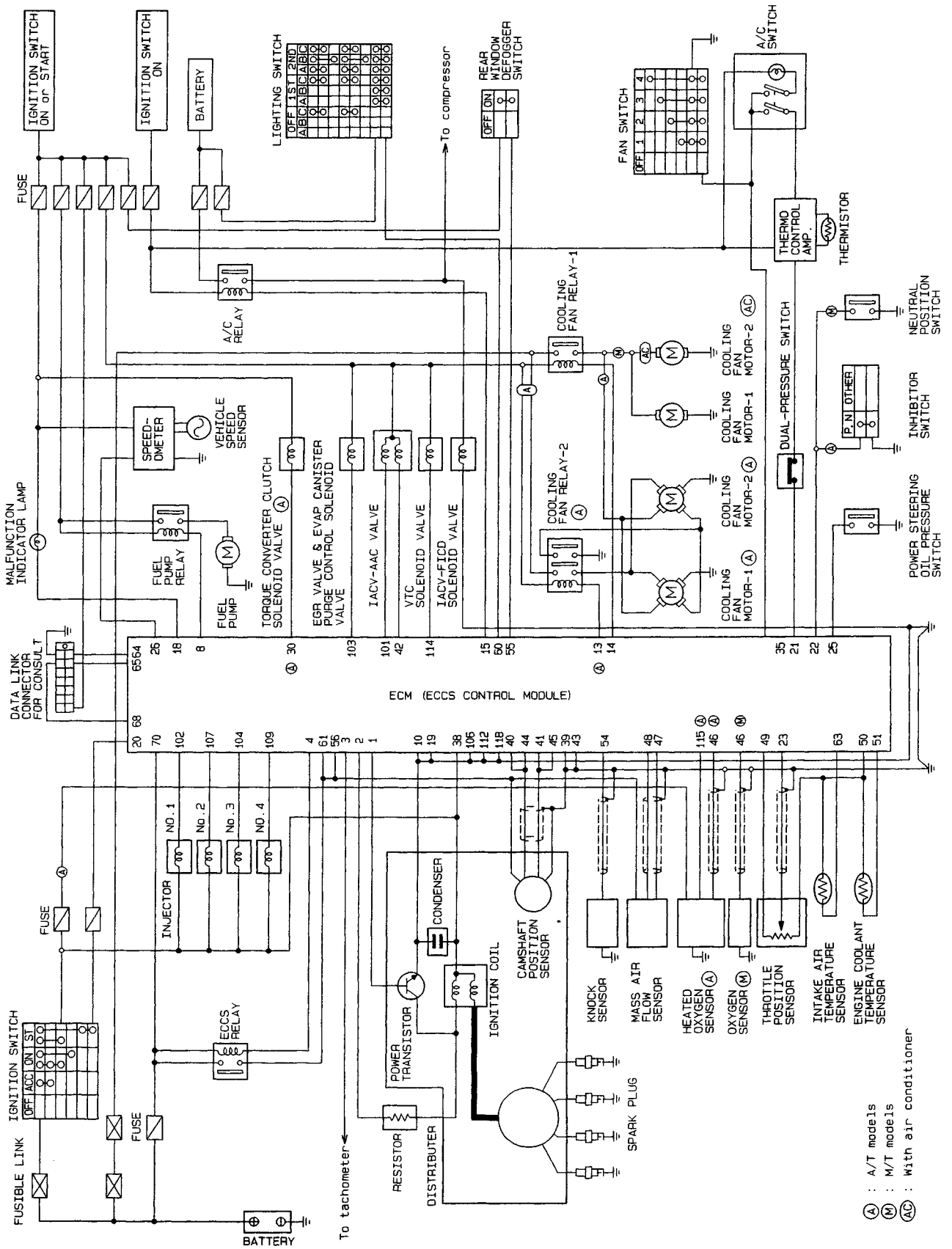

HEC061

Simpo PDF Merge and Split Unregistered Version - http://www.simpopdf.com

System Diagram — GA14DE, GA16DE for Europe and Israel

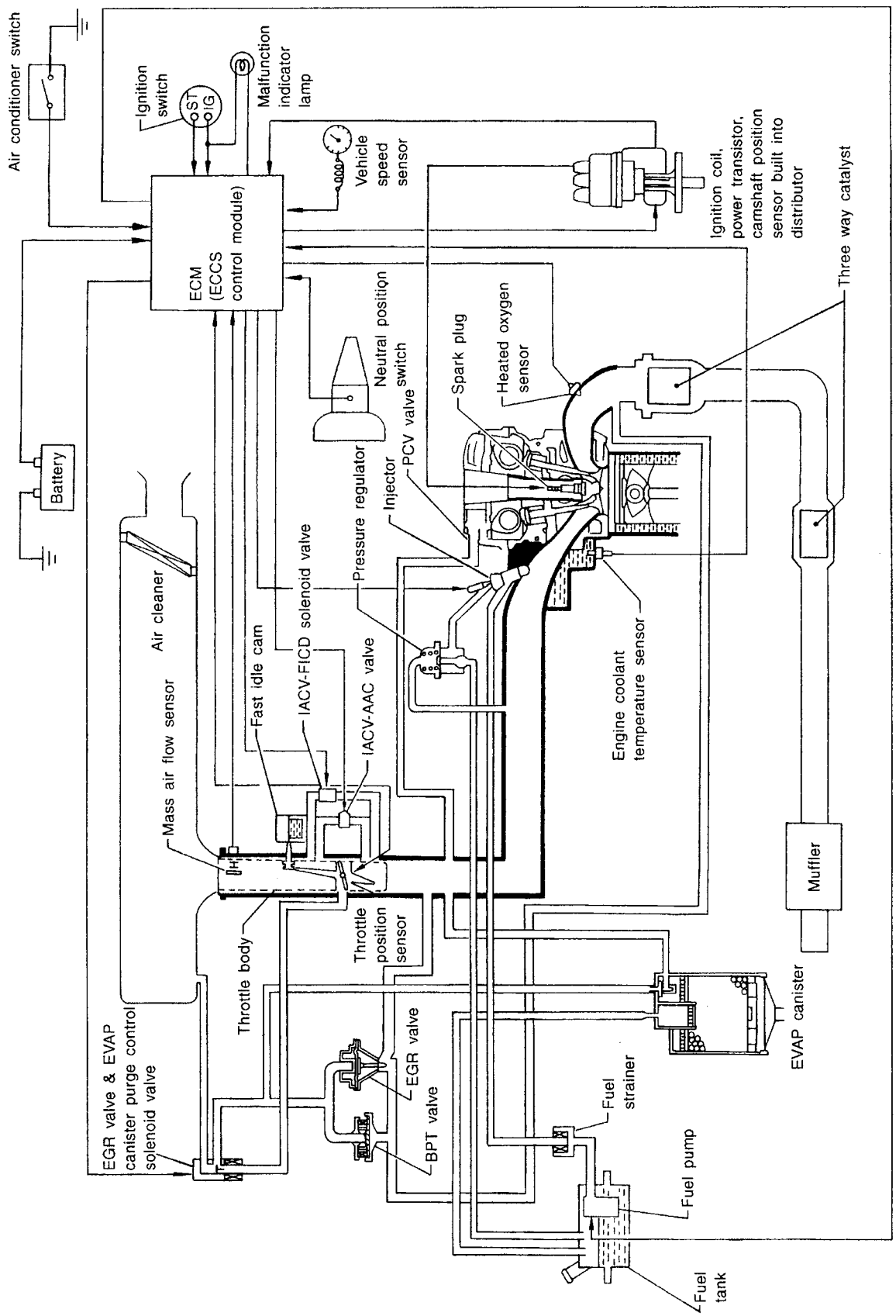

SEF119R

EC

Simpo PDF Merge and Split Unregistered Version - http://www.simpopdf.com

System Diagram — GA15DE

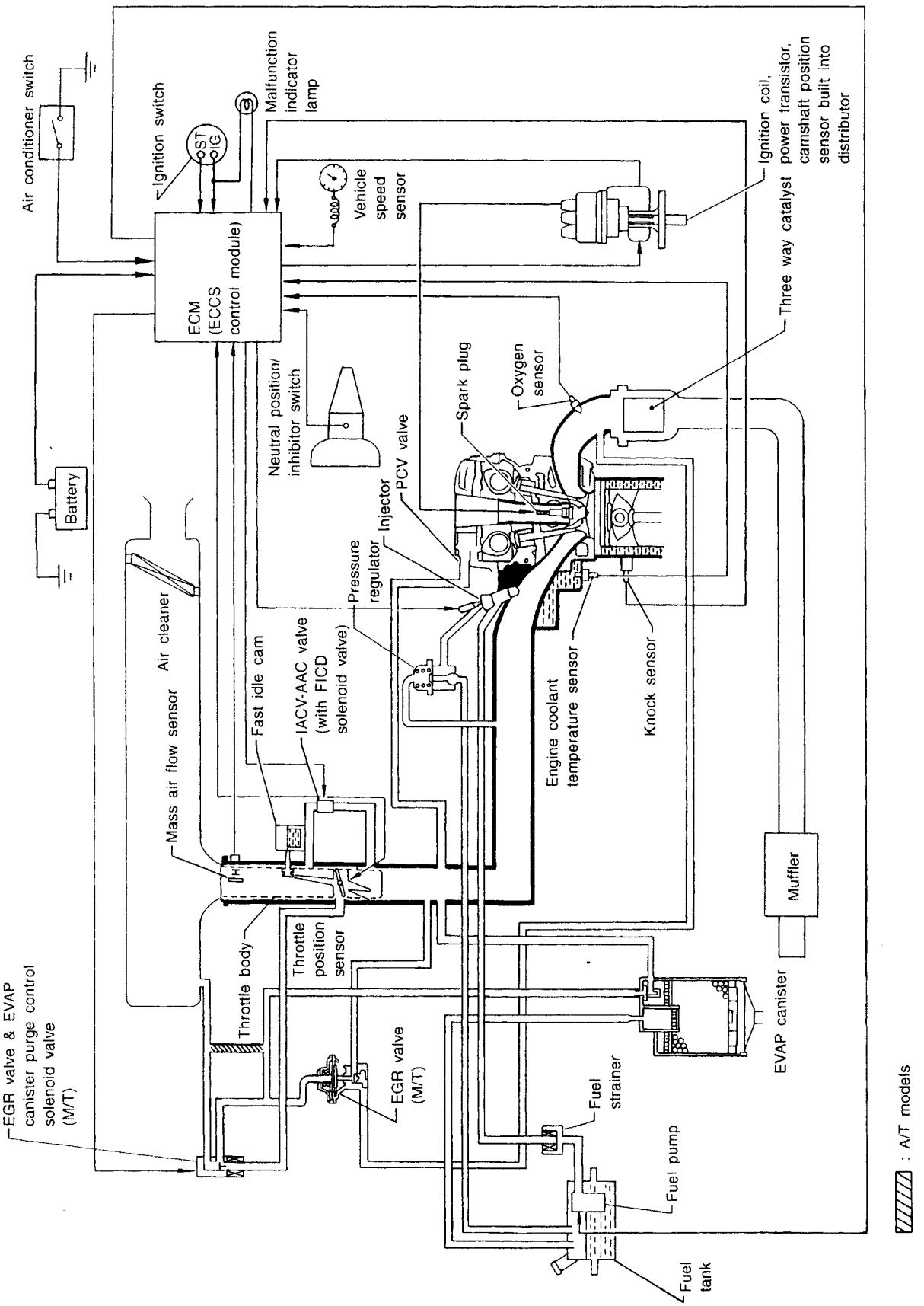

SEF120R

Simpo PDF Merge and Split Unregistered Version - http://www.simpopdf.com

System Diagram — GA16DE except for Europe, Israel and Australia

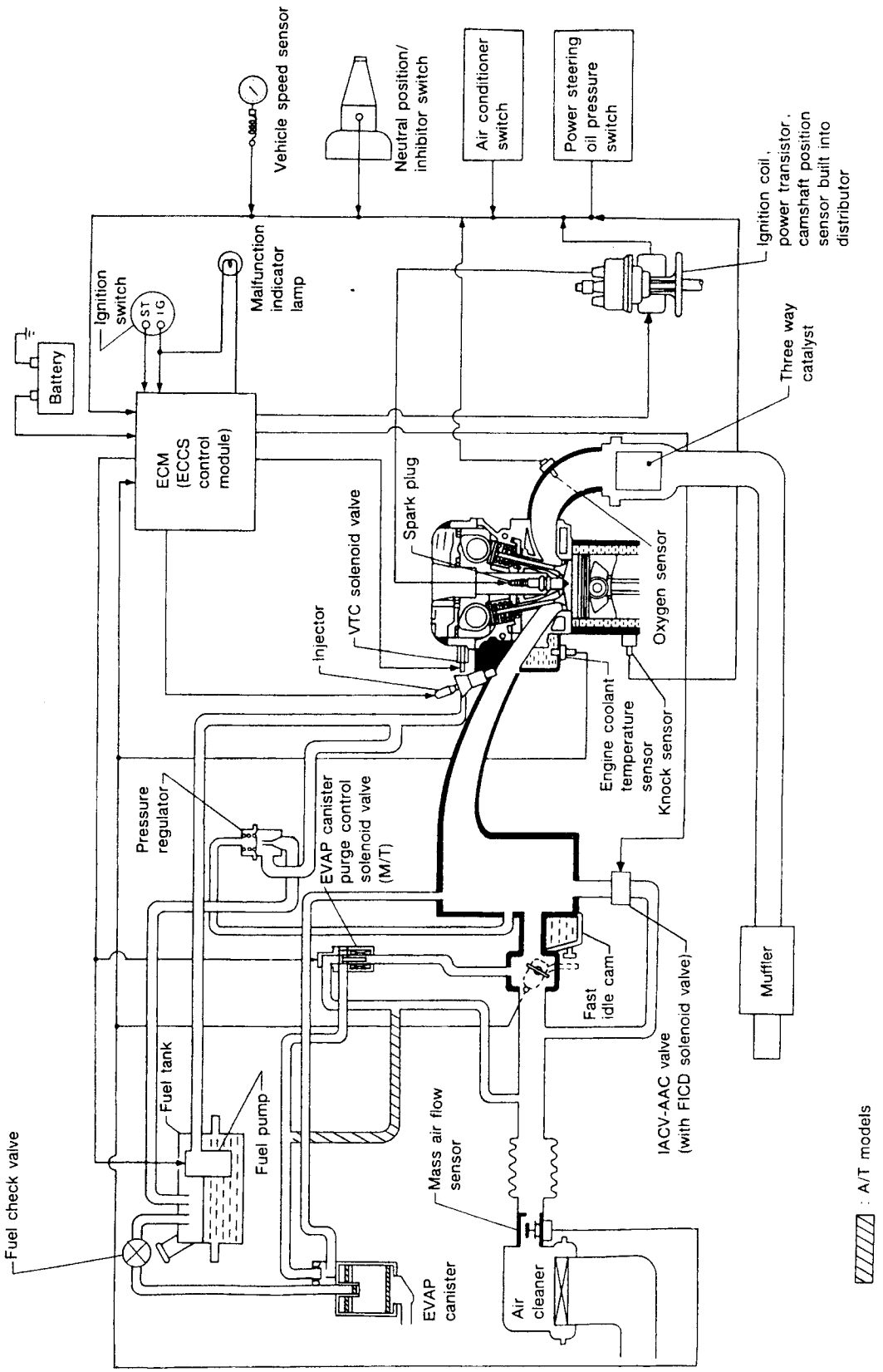

SEF450QA

Simpo PDF Merge and Split Unregistered Version - http://www.simopdf.com

System Diagram — GA16DE for Australia

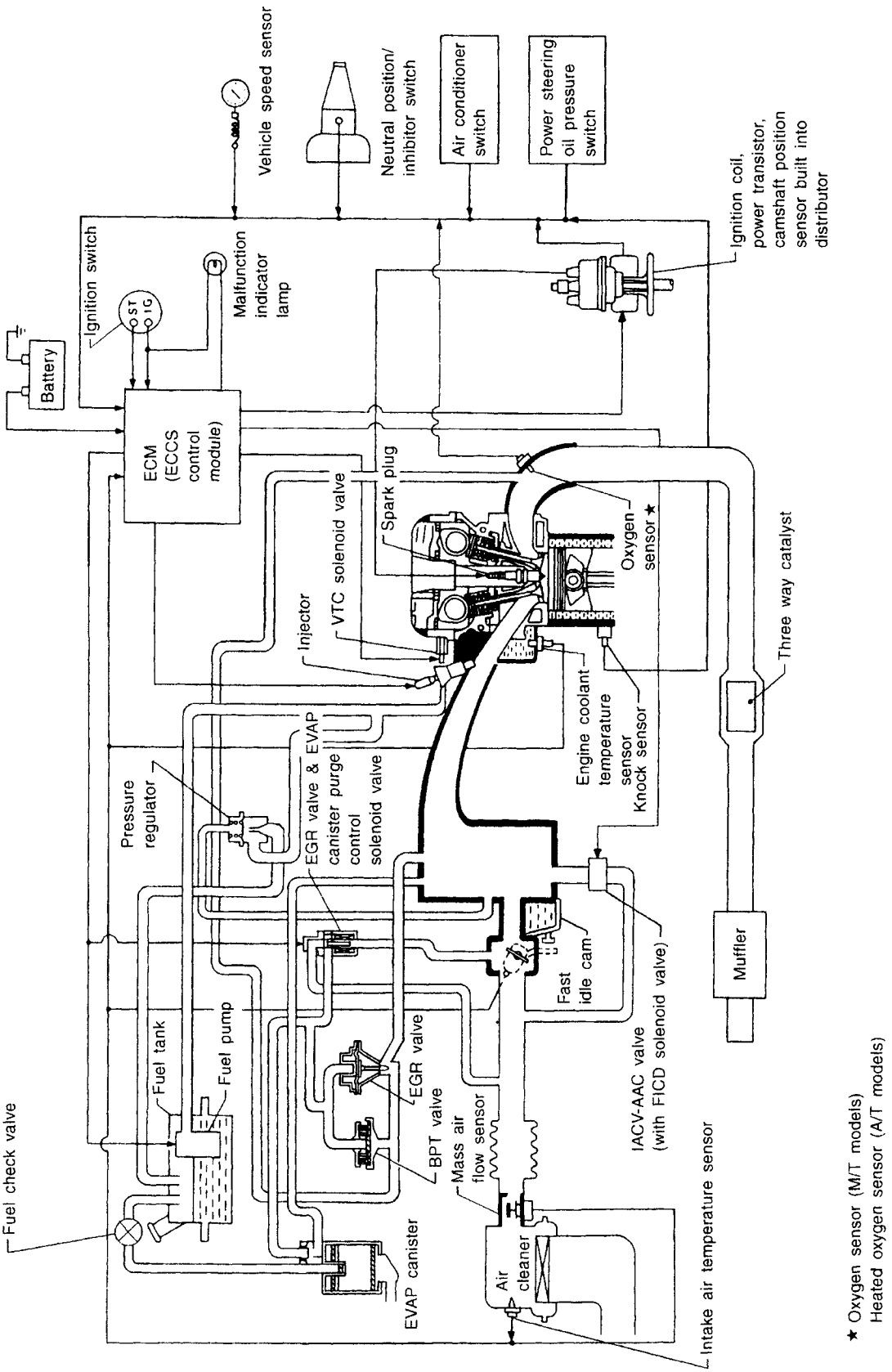

SEF121R

Simpo PDF Merge and Split Unregistered Version - http://www.simpopdf.com

ECCS Component Parts Location — GA14DE, GA16DE for Europe and Israel

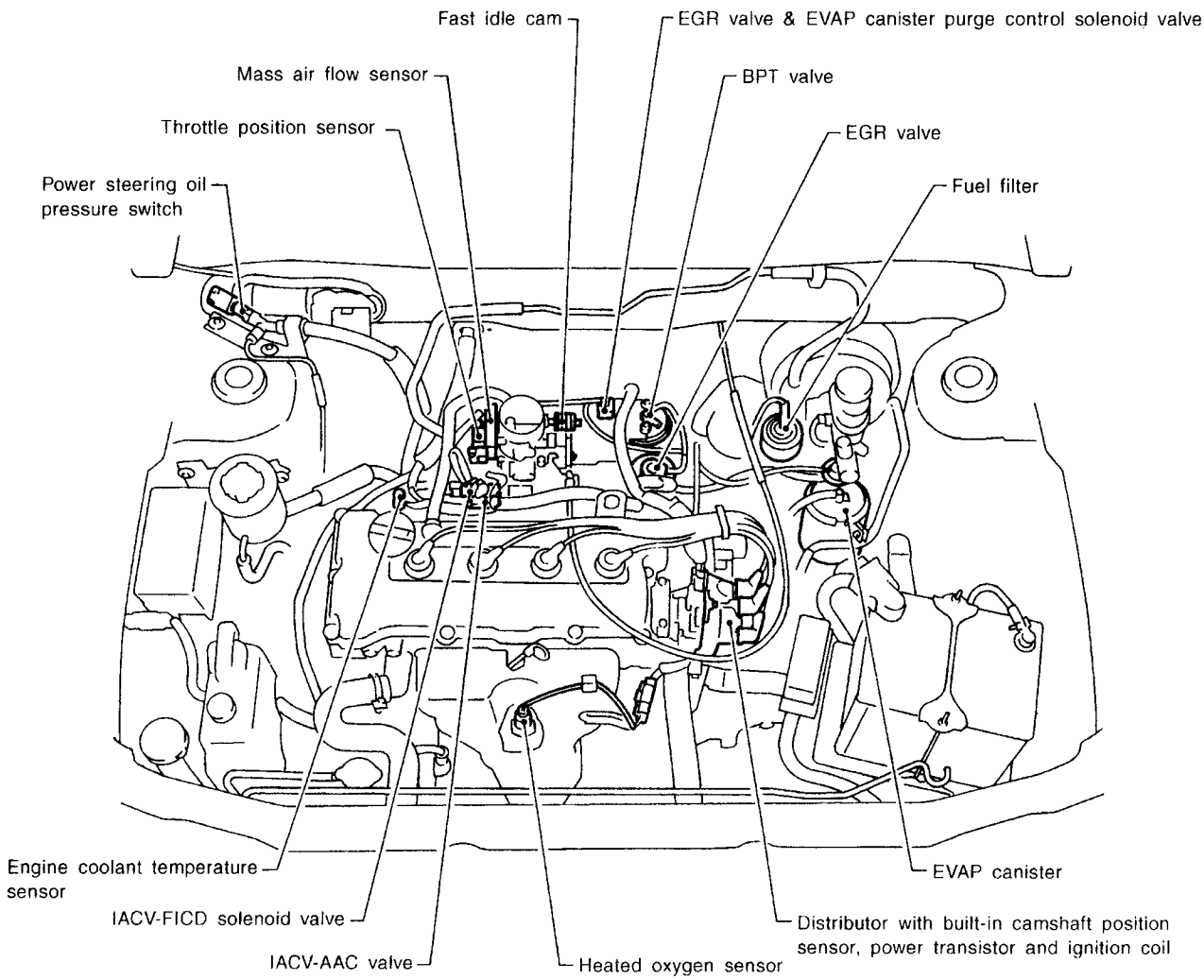

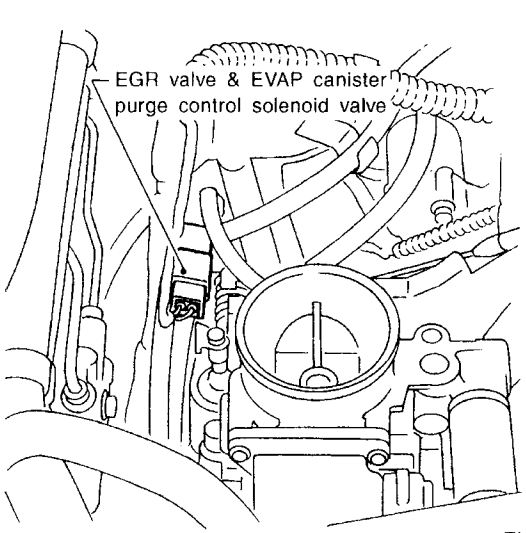

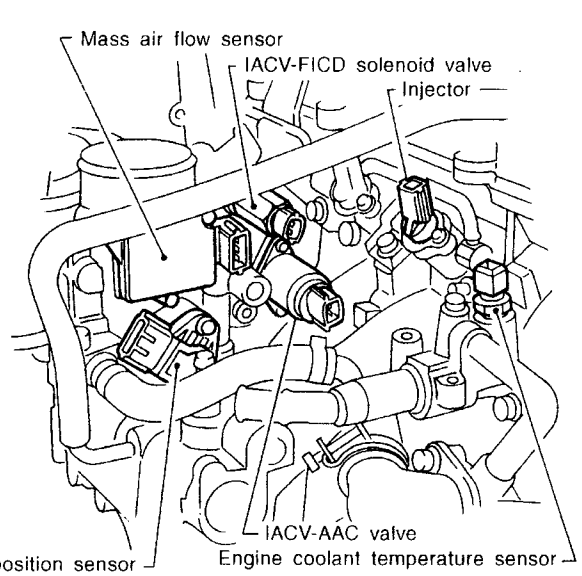

SEF122R

Simpo PDF Merge and Split Unregistered Version - http://www.simpopdf.com

ECCS Component Parts Location — GA15DE

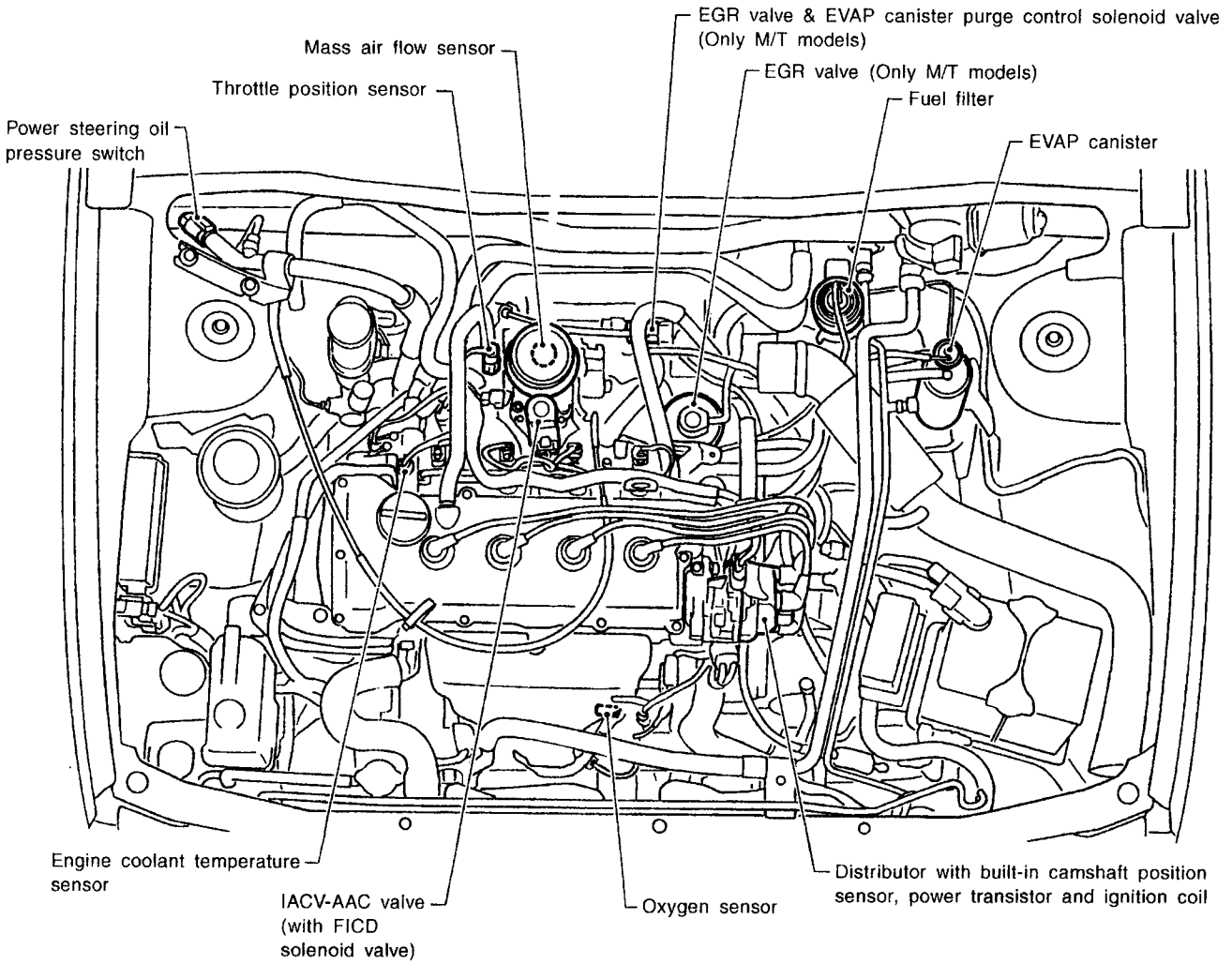

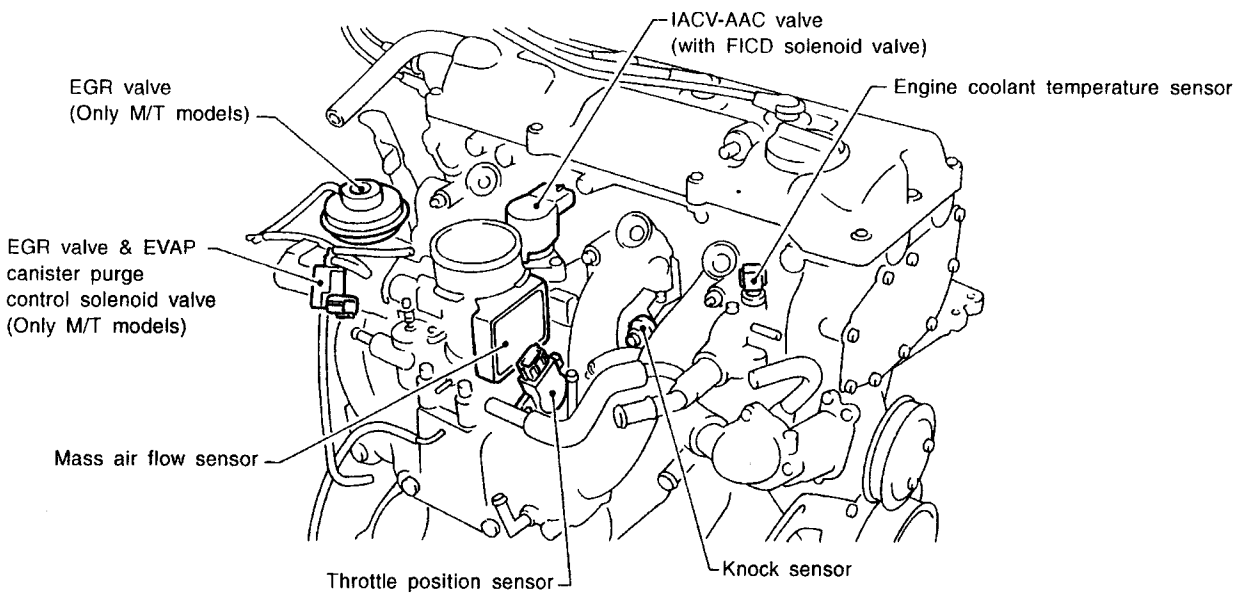

SEF123R

Simpo PDF Merge and Split Unregistered Version - http://www.simpopdf.com

ECCS Component Parts Location — GA16DE except for Europe, Israel and Australia

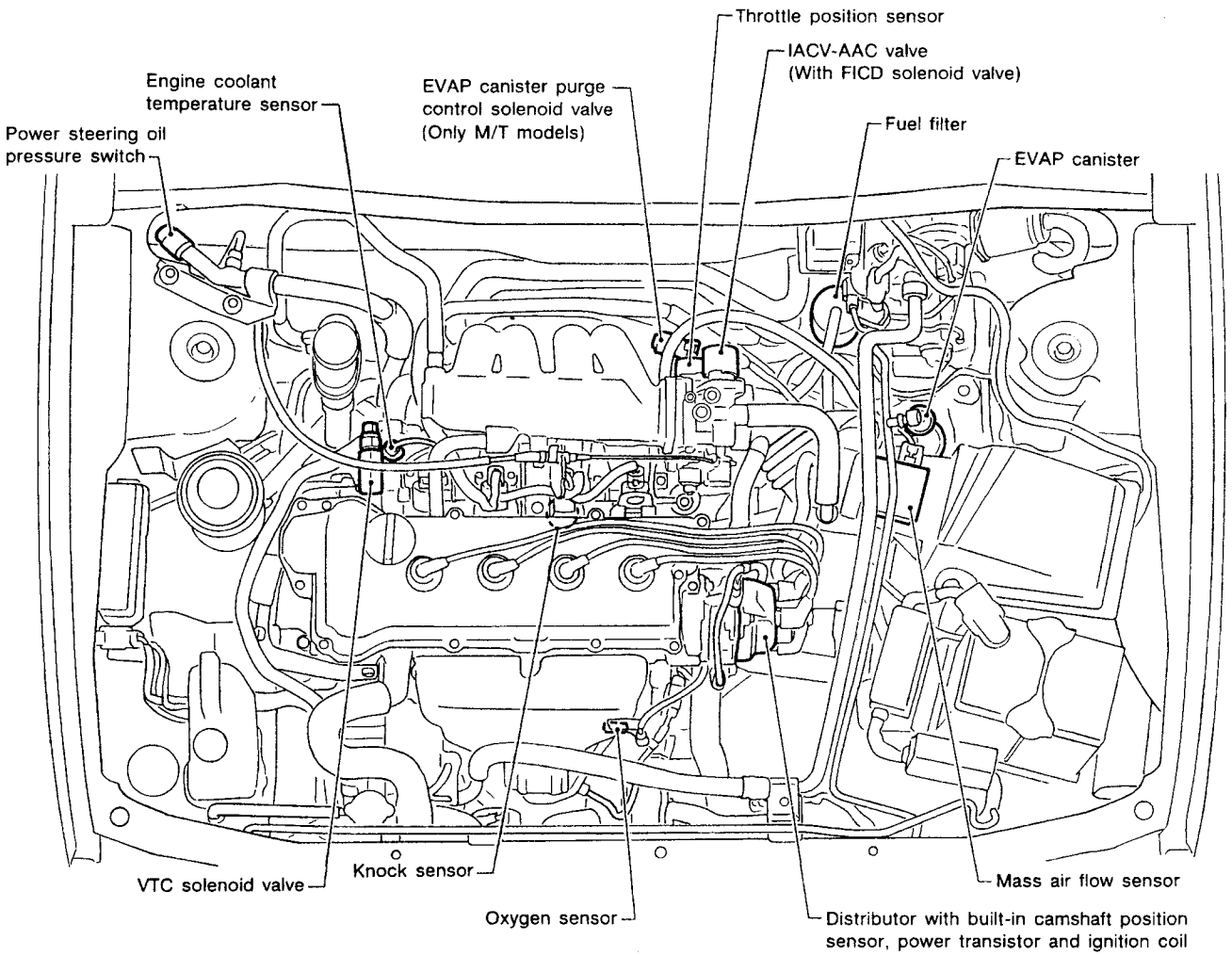

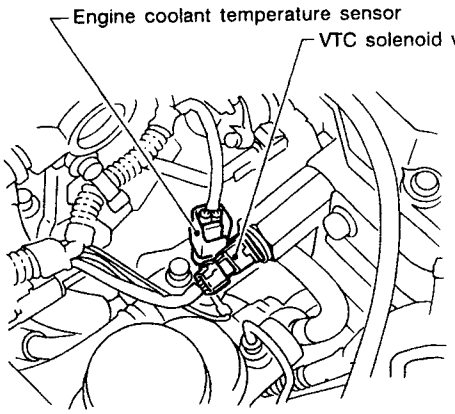

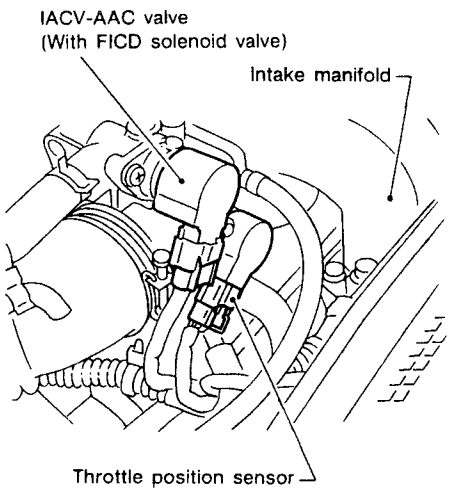

SEF451QA

Simpo PDF Merge and Split Unregistered Version - http://www.simpopdf.com

ECCS Component Parts Location — GA16DE for Australia

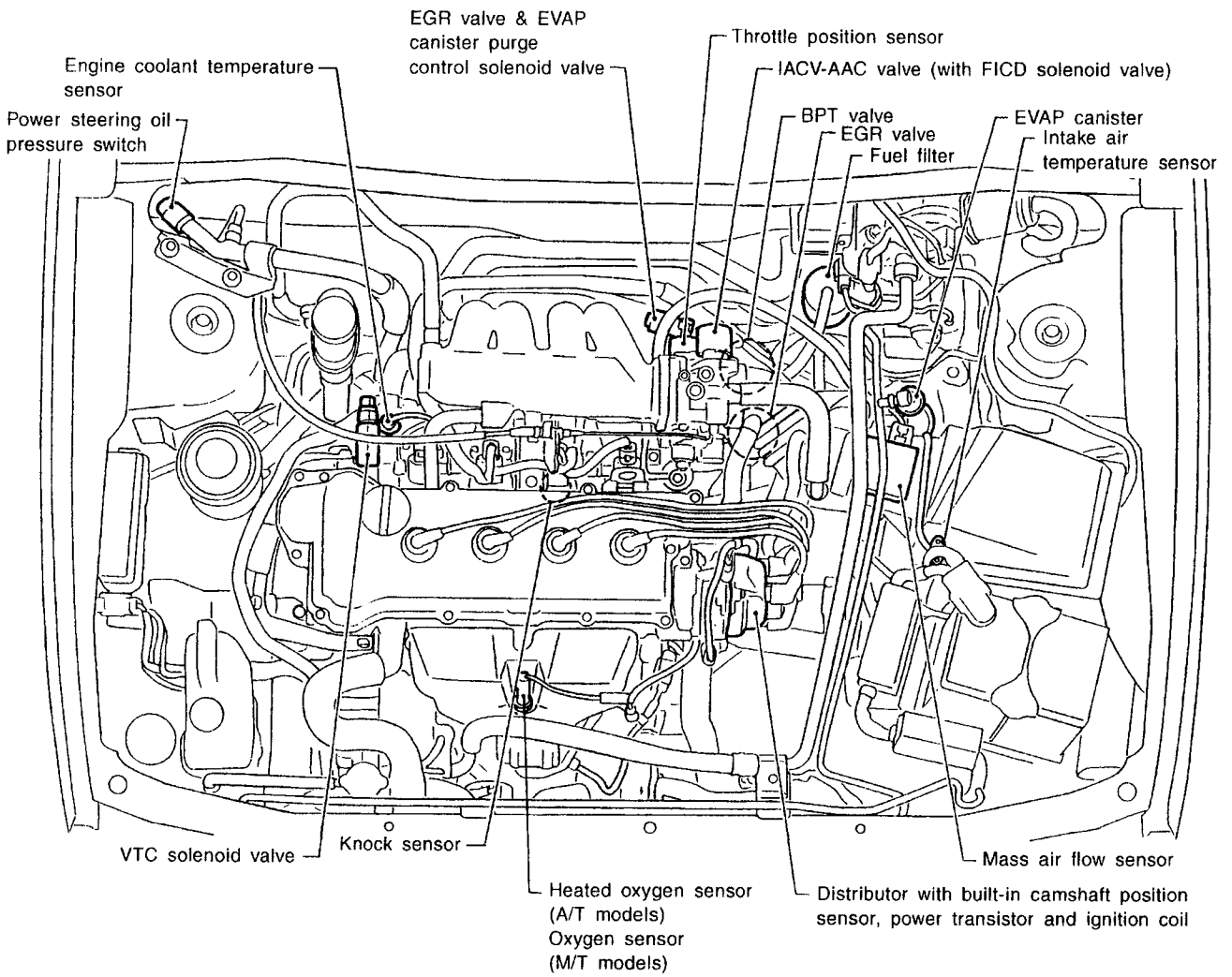

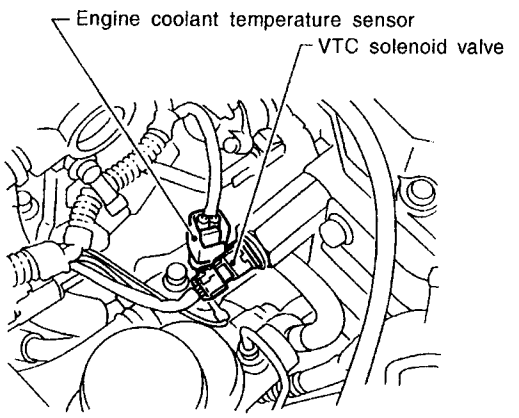

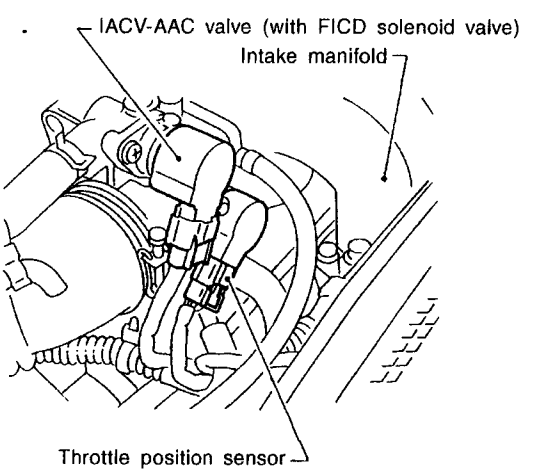

SEF124R

Simpo PDF Merge and Split Unregistered Version - http://www.simpopdf.com

ECCS Component Parts Location

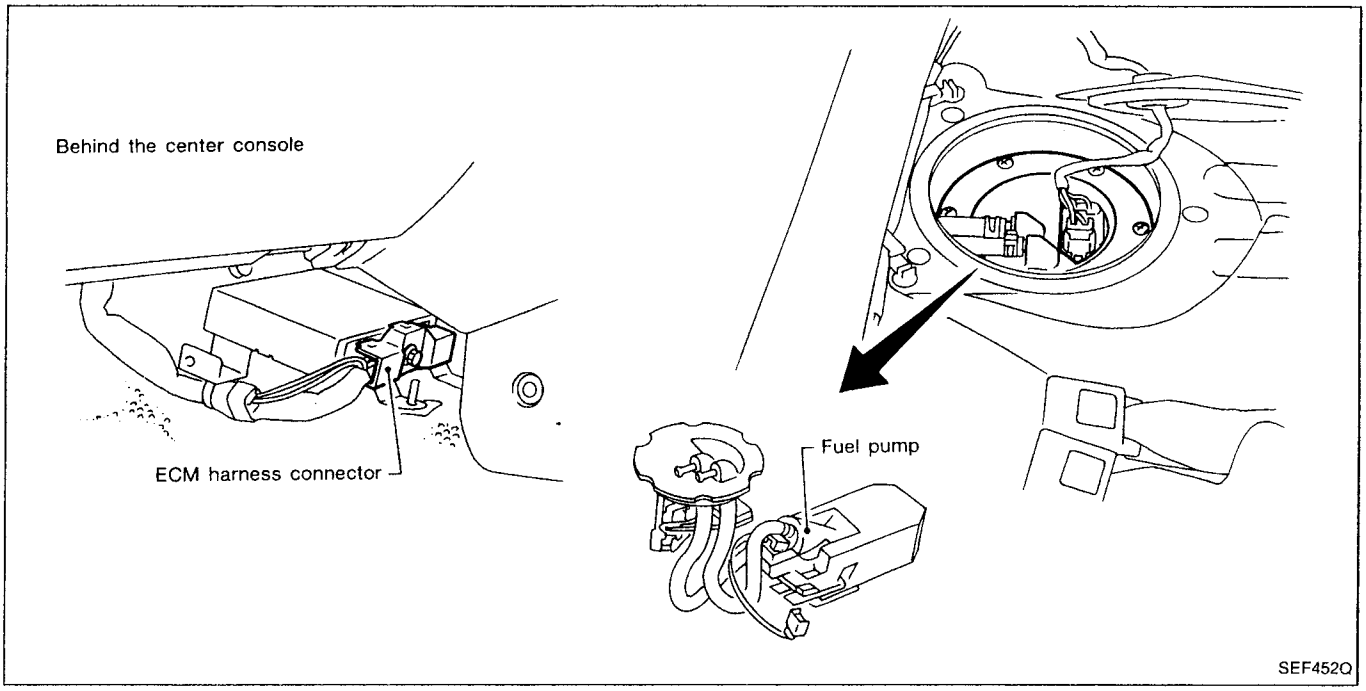

Simpo PDF Merge and Split Unregistered Version - http://www.simpopdf.com

Vacuum Hose Drawing

GA14DE, GA16DE for Europe

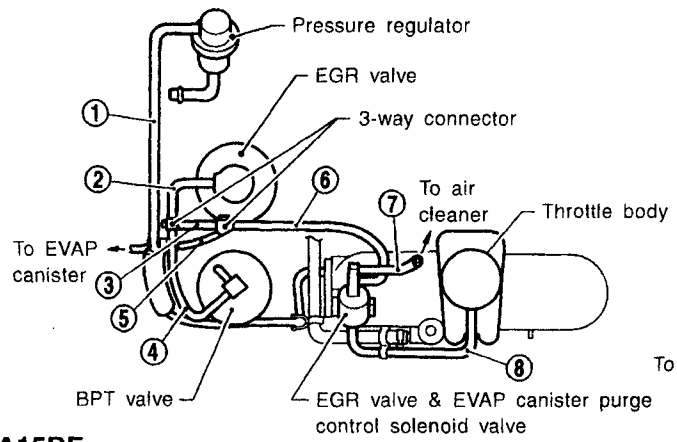

GA16DE for Australia

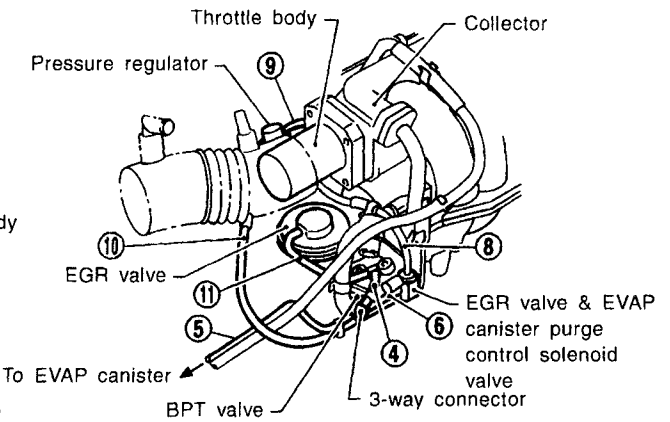

GA15DE

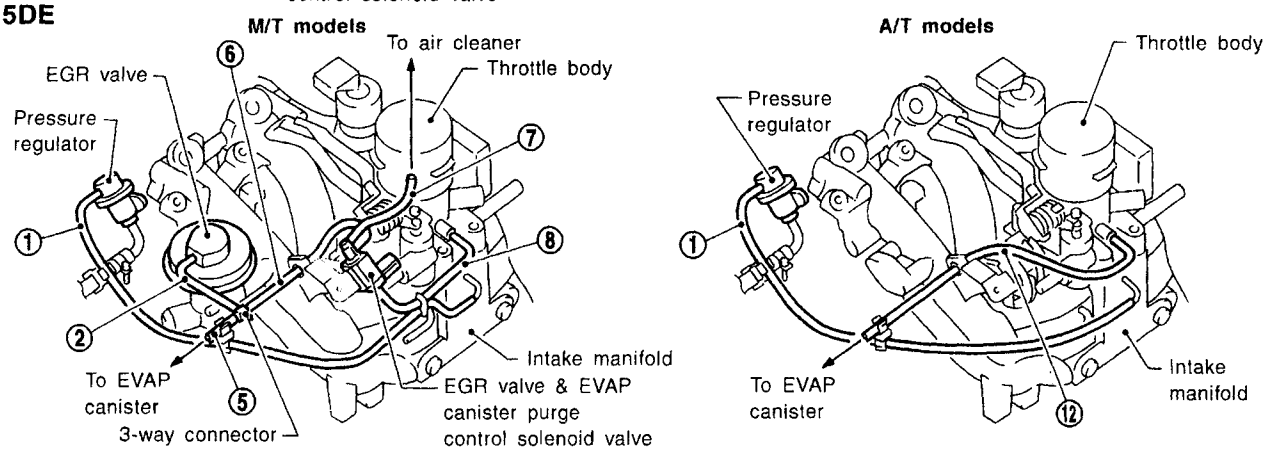

GA16DE for except Europe and Australia

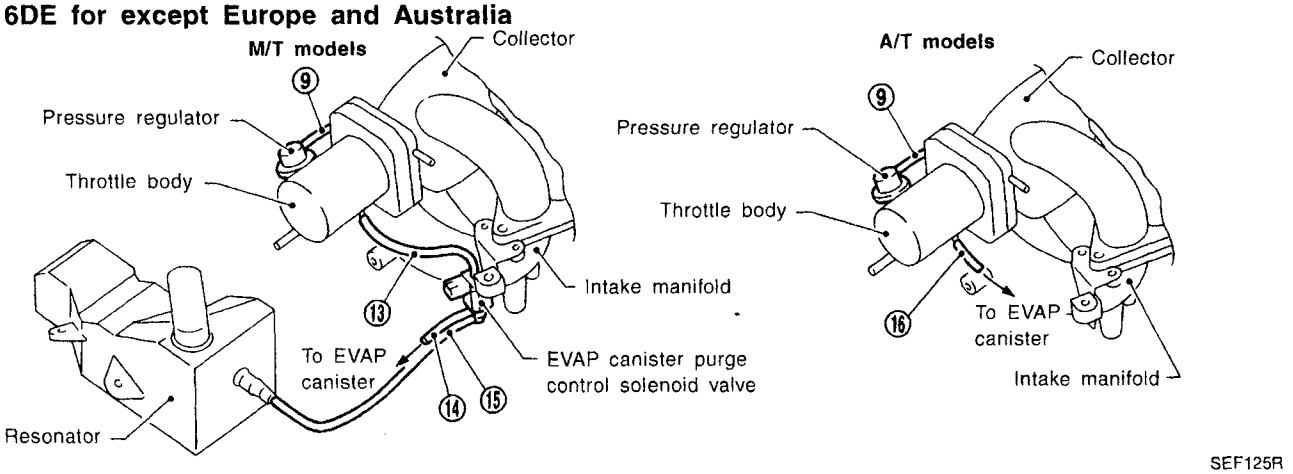

SEF125R

① Pressure regulator to intake manifold
② EGR valve to 3-way connector
③ 3-way connector to 3-way connector
④ BPT valve to 3-way connector
⑤ 3-way connector to EVAP canister
⑥ EGR valve & EVAP canister purge control solenoid valve to 3-way connector
⑦ EGR valve & EVAP canister purge control solenoid valve to air cleaner
⑧ EGR valve & EVAP canister purge control solenoid valve to throttle body
⑨ Pressure regulator to throttle body
⑩ EGR valve & EVAP canister purge control solenoid valve to air duct
⑫ Throttle body to EVAP canister
⑬ EVAP canister purge control valve to throttle body
⑭ EVAP canister purge control valve to EVAP canister
⑮ EVAP canister purge control valve to resonator
⑯ Throttle body to EVAP canister

Simpo PDF Merge and Split Unregistered Version - http://www.simpopdf.com

System Chart

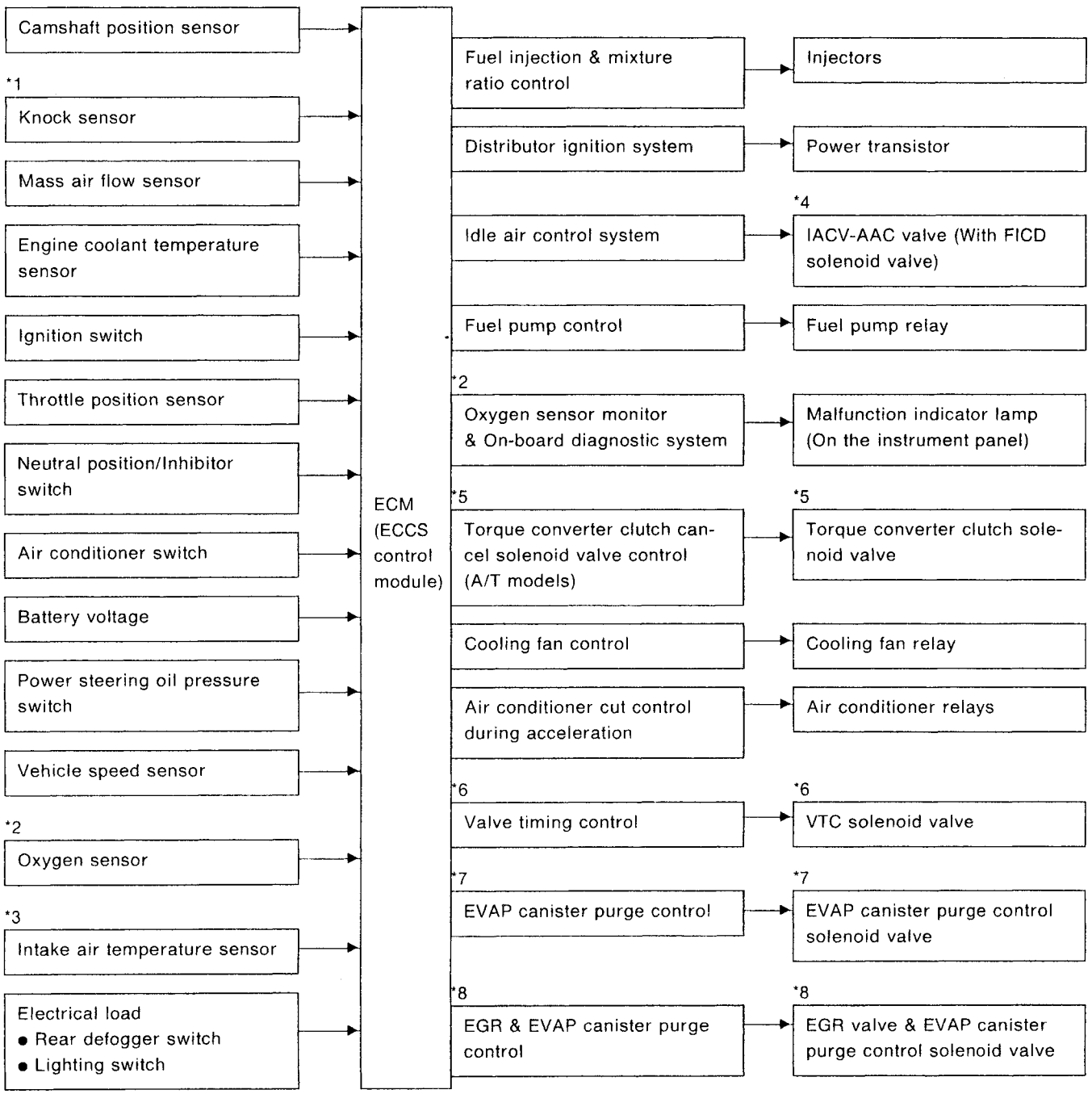

*1: Except for Europe and Israel
*2: Heated oxygen sensor (For Europe and Israel, and Australia A/T models)
Oxygen sensor (Except for Europe and Israel, and Australia A/T models)
*3: For Australia
*4: IACV-AAC valve and IACV-FICD solenoid valve (For Europe and Israel)
IACV-AAC valve (with FICD solenoid valve) (Except for Europe and Israel)
*5: Except for Europe
*6: GA16DE except for Europe and Israel
*7: GA16DE M/T models except for Europe, Israel and Australia
*8: For Europe and Israel and Australia, and GA15DE M/T models

EC

Simpo PDF Merge and Split Unregistered Version - http://www.simpopdf.com

Multiport Fuel Injection (MFI) System

INPUT/OUTPUT SIGNAL LINE

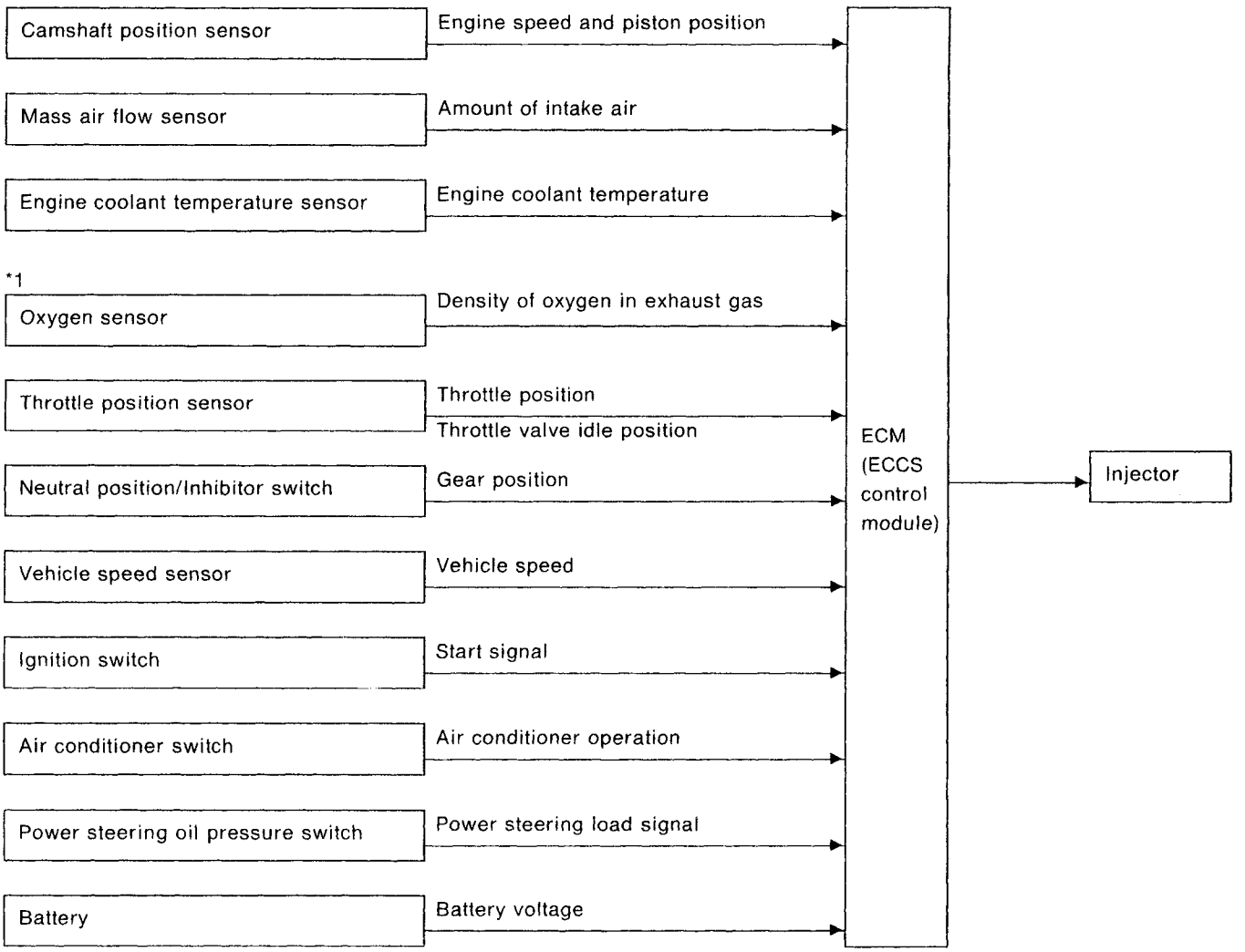

*1: Heated oxygen sensor (For Europe and Israel, and Australia A/T models)
Oxygen sensor (Except for Europe and Israel, and Australia A/T models)

BASIC MULTIPORT FUEL INJECTION SYSTEM

The amount of fuel injected from the fuel injector is determined by the ECM. The ECM controls the length of time the valve remains open (injection pulse duration). The amount of fuel injected is a program value in the ECM memory. The program value is preset by engine operating conditions. These conditions are determined by input signals (for engine speed and intake air) from both the camshaft position sensor and the mass air flow sensor.

VARIOUS FUEL INJECTION INCREASE/DECREASE COMPENSATION

In addition, the amount of fuel injected is compensated to improve engine performance under various operating conditions as listed below.

<Fuel increase>

- During warm-up
- When starting the engine
- During acceleration
- Hot-engine operation
- When selector lever is changed from "N" to "D" (A/T models only)
- High-load, high-speed operation

<Fuel decrease>

- During deceleration

Simpo PDF Merge and Split Unregistered Version - http://www.simpopdf.com

Multiport Fuel Injection (MFI) System (Cont'd)

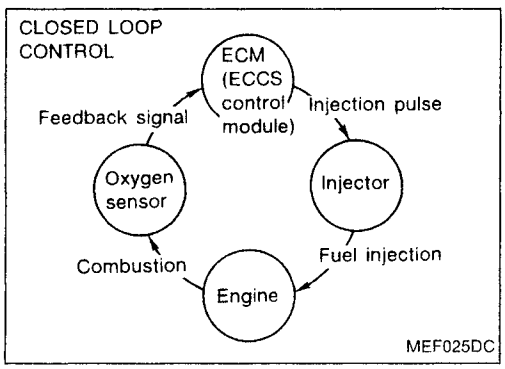

MIXTURE RATIO FEEDBACK CONTROL (CLOSED LOOP CONTROL)

The mixture ratio feedback system provides the best air-fuel mixture ratio for driveability and emission control. The three way catalyst can then better reduce CO, HC and NOx emissions. This system uses an oxygen sensor*1 in the exhaust manifold to monitor if the engine operation is rich or lean. The ECM adjusts the injection pulse width according to the sensor voltage signal. This maintains the mixture ratio within the range of stoichiometric (ideal air-fuel mixture).
This stage is referred to as the closed loop control condition.

EC

OPEN LOOP CONTROL

The open loop system condition refers to when the ECM detects any of the following conditions. Feedback control stops in order to maintain stabilized fuel combustion.

- Deceleration and acceleration
- High-load, high-speed operation
- Engine idling
- Malfunction of oxygen sensor*1 or its circuit
- Insufficient activation of oxygen sensor*1 at low engine coolant temperature
- High-engine coolant temperature
- After shifting from "N" to "D"
- During warm-up
- When starting the engine

MIXTURE RATIO SELF-LEARNING CONTROL

The mixture ratio feedback control system monitors the mixture ratio signal transmitted from the oxygen sensor*1. This feedback signal is then sent to the ECM. The ECM controls the basic mixture ratio as close to the theoretical mixture ratio as possible. However, the basic mixture ratio is not necessarily controlled as originally designed. Both manufacturing differences (i.e., mass air flow sensor hot film) and characteristic changes during operation (i.e., injector clogging) directly affect mixture ratio.
Accordingly, the difference between the basic and theoretical mixture ratios is monitored in this system. This is then computed in terms of "injection pulse duration" to automatically compensate for the difference between the two ratios.

*1: Heated oxygen sensor (For Europe and Israel, and Australia A/T models)
Oxygen sensor (Except for Europe and Israel, and Australia A/T models)

Simpo PDF Merge and Split Unregistered Version - http://www.simpopdf.com

Multiport Fuel Injection (MFI) System (Cont'd)

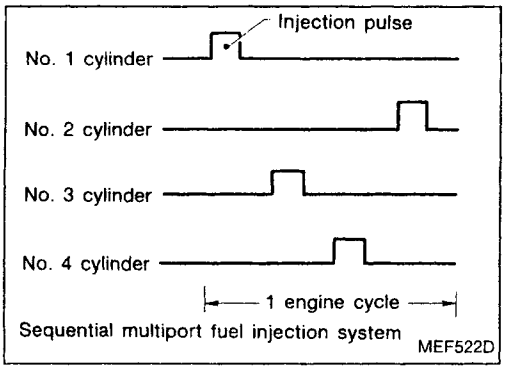

Sequential multiport fuel injection system
MEF522D

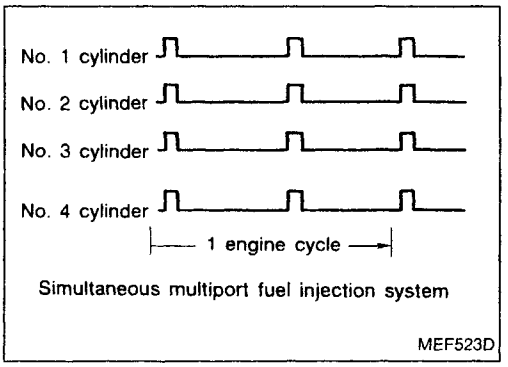

Simultaneous multiport fuel injection system
MEF523D

FUEL INJECTION TIMING

Two types of systems are used.

Sequential multiport fuel injection system

Fuel is injected into each cylinder during each engine cycle according to the firing order. This system is used when the engine is running.

Simultaneous multiport fuel injection system

Fuel is injected simultaneously into all four cylinders twice each engine cycle. In other words, pulse signals of the same width are simultaneously transmitted from the ECM.
The four injectors will then receive the signals two times for each engine cycle.
This system is used when the engine is being started and/or if the fail-safe system (CPU) is operating.

FUEL SHUT-OFF

Fuel to each cylinder is cut off during deceleration or operation of the engine and the vehicle at excessively high speeds.

Simpo PDF Merge and Split Unregistered Version - http://www.simpopdf.com

Distributor Ignition (DI) System

INPUT/OUTPUT SIGNAL LINE

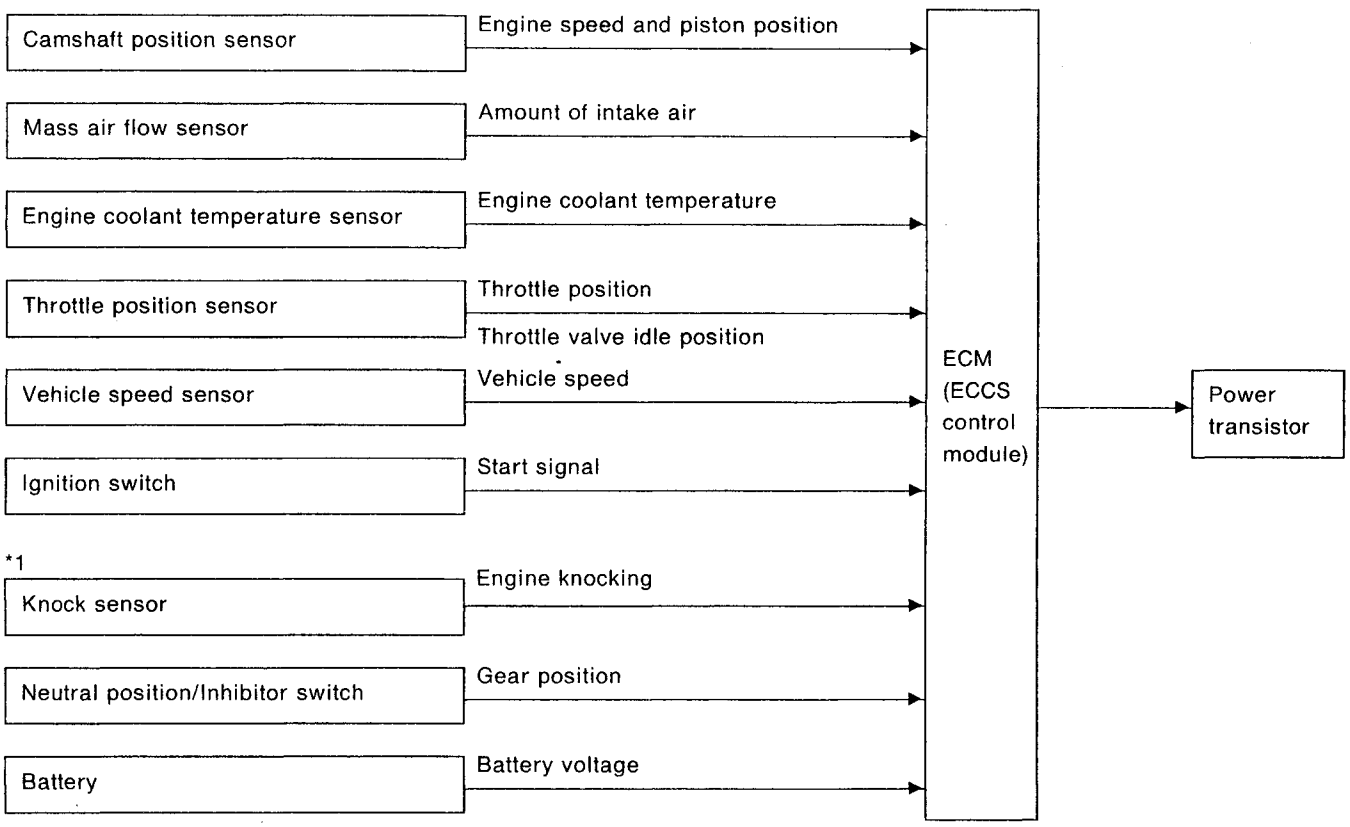

*1: Except for Europe and Israel

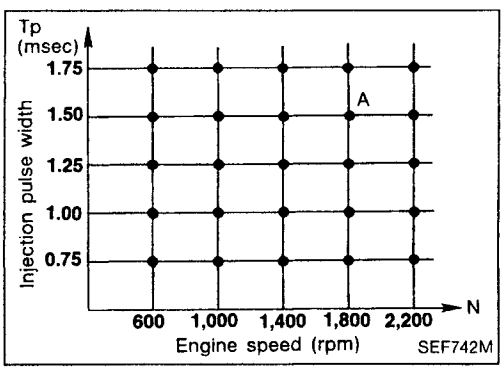

SYSTEM DESCRIPTION

The ignition timing is controlled by the ECM to maintain the best air-fuel ratio for every running condition of the engine.
The ignition timing data is stored in the ECM. This data forms the map shown.
The ECM receives information such as the injection pulse width and camshaft position sensor signal. Computing this information, ignition signals are transmitted to the power transistor.

e.g., N: 1,800 rpm, Tp: 1.50 msec
A °BTDC

During the following conditions, the ignition timing is revised by the ECM according to the other data stored in the ECM.

- At starting
- During warm-up
- At idle
- Hot engine operation
- During acceleration
- During high-load operation (VTC on) — GA16DE except for Europe and Israel

Except for Europe and Israel
The knock sensor retard system is designed only for emergencies. The basic ignition timing is programmed within the anti-knocking zone, if recommended fuel is used under dry conditions. The retard system does not operate under normal driving conditions.
If engine knocking occurs, the knock sensor monitors the condition. The signal is transmitted to the ECM (ECCS control module). The ECM retards the ignition timing to eliminate the knocking condition.

Simpo PDF Merge and Split Unregistered Version - http://www.simpopdf.com

Air Conditioning Cut Control

INPUT/OUTPUT SIGNAL LINE

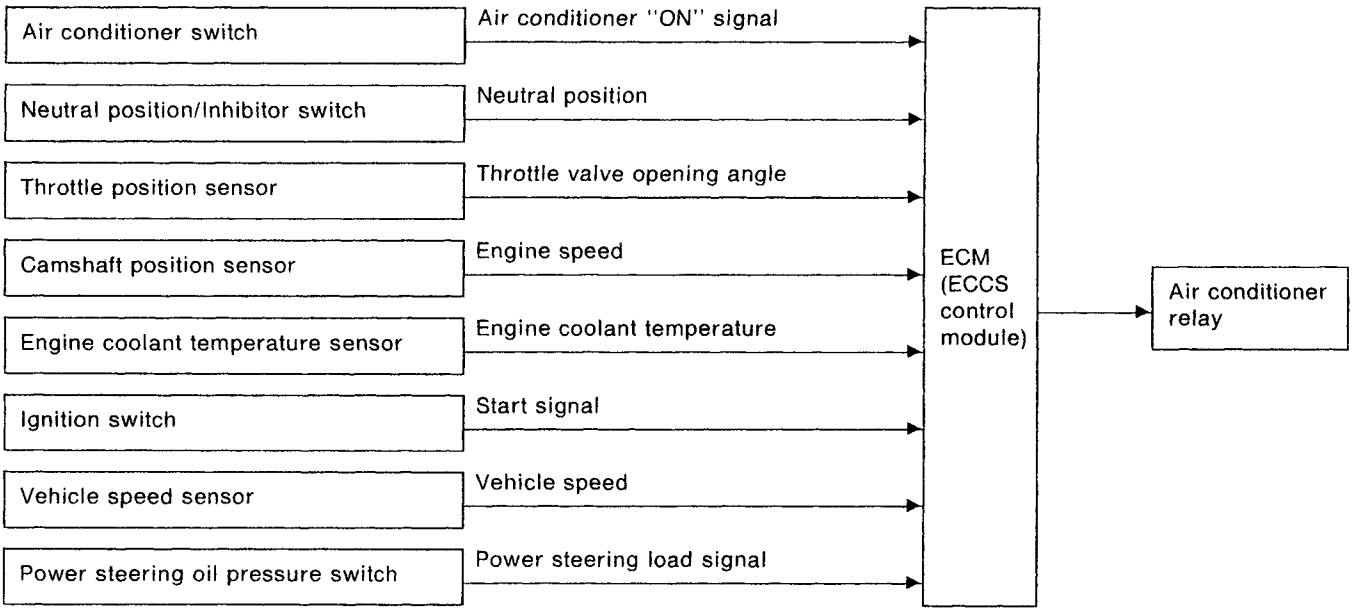

SYSTEM DESCRIPTION

This system improves acceleration when the air conditioner is used.
When the accelerator pedal is fully depressed, the air conditioner is turned off for a few seconds.

Fuel Cut Control (at no load & high engine speed)

INPUT/OUTPUT SIGNAL LINE

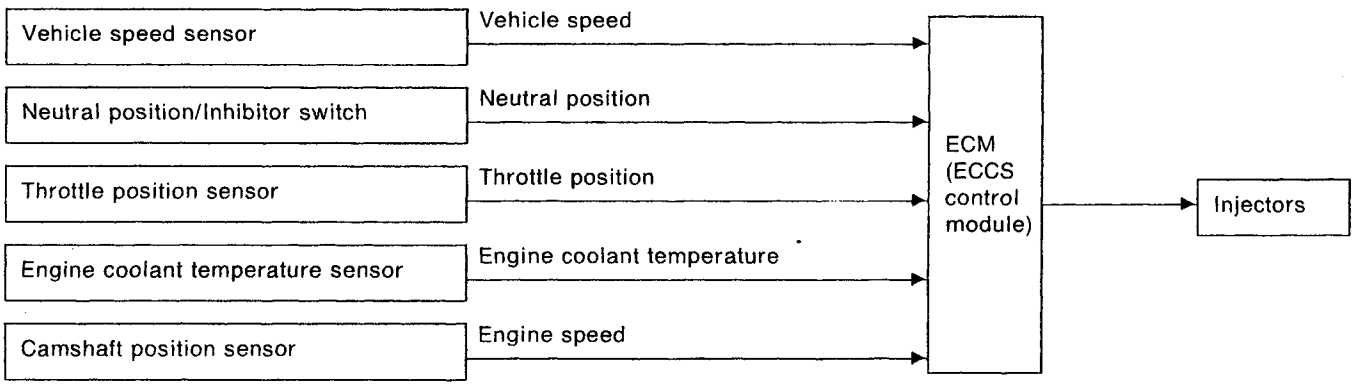

If the engine speed is above 2,500 rpm with no load (for example, in neutral and engine speed over 2,500 rpm) fuel will be cut off after some time. The exact time when the fuel is cut off varies based on engine speed.
Fuel cut will operate until the engine speed reaches 2,000 rpm, then fuel cut is cancelled.

NOTE:
This function is different than deceleration control listed under "Multiport Fuel Injection (MFI) System" on EC-24.

Simpo PDF Merge and Split Unregistered Version - http://www.simpopdf.com

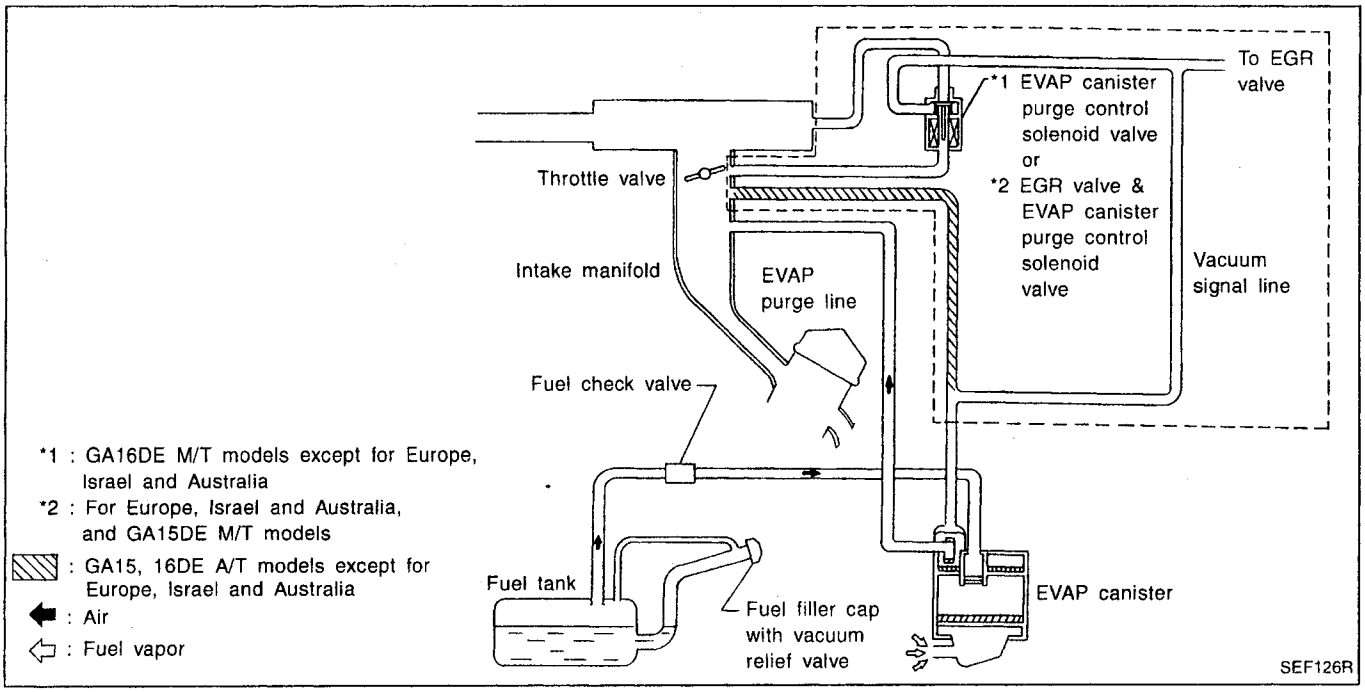

The evaporative emission system is used to reduce hydrocarbons emitted into the atmosphere from the fuel system. This reduction of hydrocarbons is accomplished by activated charcoals in the EVAP canister.

The fuel vapor from sealed fuel tank is led into the EVAP canister when the engine is off. The fuel vapor is then stored in the EVAP canister. The EVAP canister retains the fuel vapor until the EVAP canister is purged by air.

When the engine is running, the air is drawn through the bottom of the EVAP canister. The fuel vapor will then be led to the intake manifold.

When the engine runs at idle, the EVAP canister purge control valve is closed. Only a small amount of vapor flows into the intake manifold through the constant purge orifice.

As the engine speed increases and the throttle vacuum rises, the purge control valve opens. The vapor is sucked through both main purge and constant purge orifices.

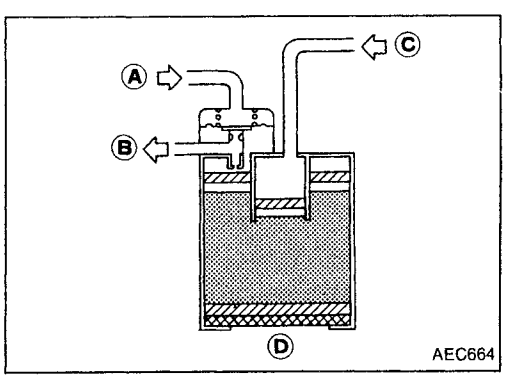

Inspection

EVAP CANISTER

Check EVAP canister as follows:

1. Blow air in port Ⓐ and ensure that there is no leakage.
2. Apply vacuum to port Ⓐ. [Approximately –13.3 to –20.0 kPa (–133 to –200 mbar, –100 to –150 mmHg, –3.94 to –5.91 inHg)]
3. Cover port Ⓓ with hand.
4. Blow air in port Ⓒ and ensure free flow out of port Ⓑ.

Simpo PDF Merge and Split Unregistered Version - http://www.simpopdf.com

Inspection (Cont'd)

FUEL CHECK VALVE

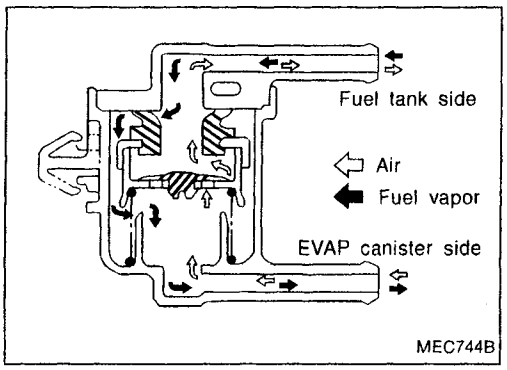

Check valve operation

1. Blow air through connector on fuel tank side.
   A considerable resistance should be felt and a portion of air flow should be directed toward the EVAP canister side.
2. Blow air through connector on EVAP canister side.
   Air flow should be smoothly directed toward fuel tank side.
3. If fuel check valve is suspected of not properly functioning in steps 1 and 2 above, replace it.

FUEL TANK VACUUM RELIEF VALVE

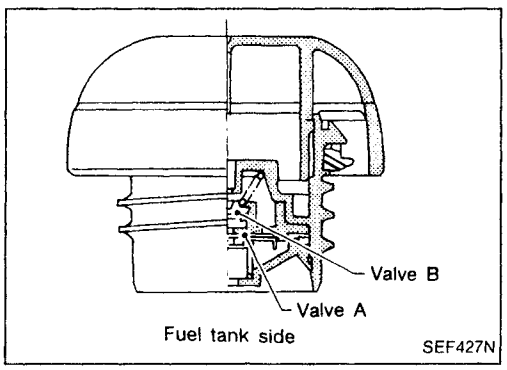

1. Wipe clean valve housing.
2. Suck air through the cap. A slight resistance accompanied by valve clicks indicates that valve A is in good mechanical condition. Note also that, by further sucking air, the resistance should disappear with valve clicks.
3. Blow air on fuel tank side and ensure that continuity of air passage exists through valve B.
4. If valve is clogged or if no resistance is felt, replace cap as an assembly.

Simpo PDF Merge and Split Unregistered Version - http://www.simpopdf.com

Description

This system returns blow-by gas to the intake manifold collector.
The positive crankcase ventilation (PCV) valve is provided to conduct crankcase blow-by gas to the intake manifold.
During partial throttle operation of the engine, the intake manifold sucks the blow-by gas through the PCV valve.
Normally, the capacity of the valve is sufficient to handle any blow-by and a small amount of ventilating air.
The ventilating air is then drawn from the air duct into the crankcase. In this process the air passes through the hose connecting air inlet tubes to rocker cover.
Under full-throttle condition, the manifold vacuum is insufficient to draw the blow-by flow through the valve. The flow goes through the hose connection in the reverse direction.
On vehicles with an excessively high blow-by, the valve does not meet the requirement. This is because some of the flow will go through the hose connection to the intake manifold collector under all conditions.

For Europe and Israel, and GA15DE

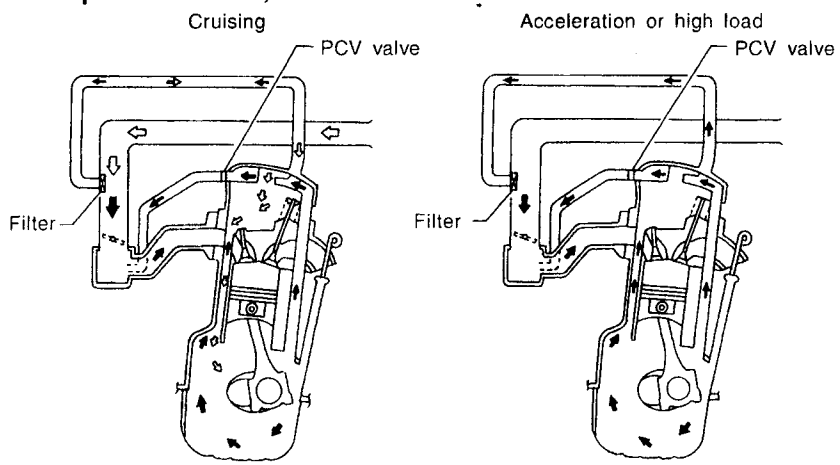

GA16DE except for Europe and Israel

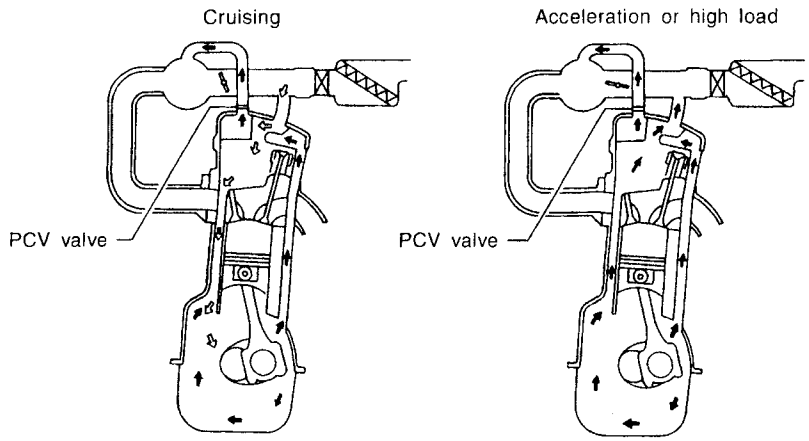

PCV valve operation

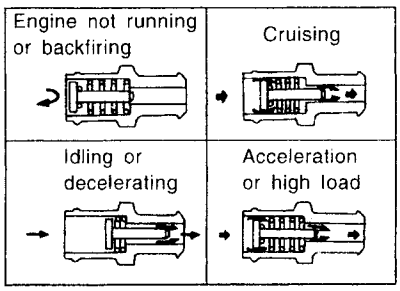

⇨ : Fresh air
➡ : Blow-by gas

SEF127R

Simpo PDF Merge and Split Unregistered Version - http://www.simpopdf.com

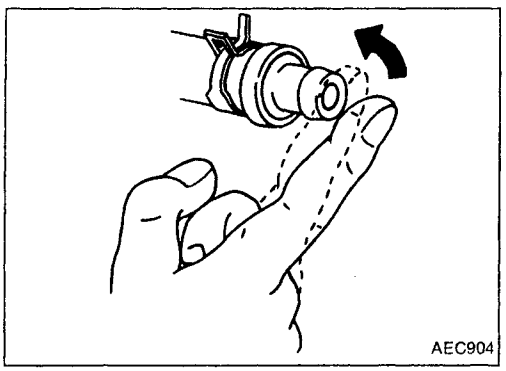
AEC904

Inspection

PCV (Positive Crankcase Ventilation) VALVE

With engine running at idle, remove PCV valve from rocker cover. A properly working valve makes a hissing noise as air passes through it. A strong vacuum should be felt immediately when a finger is placed over the valve inlet.

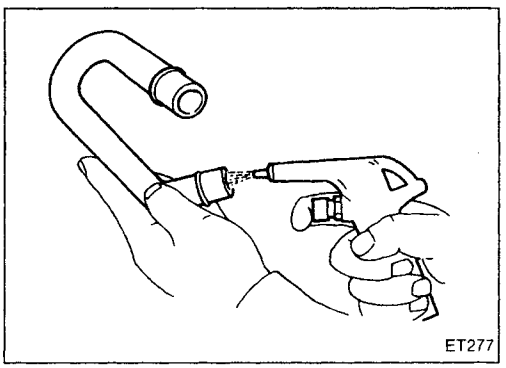
ET277

PCV HOSE

1. Check hoses and hose connections for leaks.
2. Disconnect all hoses and clean with compressed air. If any hose cannot be freed of obstructions, replace.

Simpo PDF Merge and Split Unregistered Version - http://www.simpopdf.com

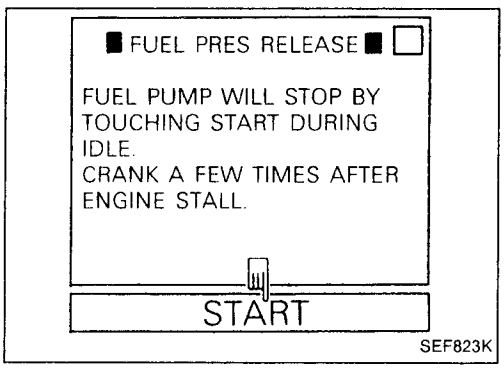

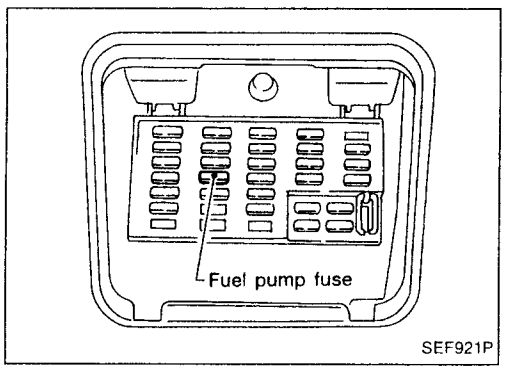

Fuel Pressure Release

Before disconnecting fuel line, release fuel pressure from fuel line to eliminate danger.

1. Turn ignition switch "ON".
2. Perform "FUEL PRESSURE RELEASE" in "WORK SUPPORT" mode with CONSULT.
3. Start engine.
4. After engine stalls, crank it two or three times to release all fuel pressure.
5. Turn ignition switch "OFF".

1. Remove fuse for fuel pump.
2. Start engine.
3. After engine stalls, crank it two or three times to release all fuel pressure.
4. Turn ignition switch off and reconnect fuel pump fuse.

EC

Fuel Pressure Check

- **When reconnecting fuel line, always use new clamps.**
- **Make sure that clamp screw does not contact adjacent parts.**
- **Use a torque driver to tighten clamps.**
- **Use Pressure Gauge to check fuel pressure.**
- **Do not perform fuel pressure check with system operating. Fuel pressure gauge may indicate false readings.**

1. Release fuel pressure to zero.
2. Disconnect fuel hose between fuel filter and fuel tube (engine side).
3. Install pressure gauge between fuel filter and fuel tube.
4. Start engine and check for fuel leakage.
5. Read the indication of fuel pressure gauge.

At idling:

With vacuum hose connected

Approximately 245 kPa (2.45 bar, 2.5 kg/cm^2, 36 psi)

With vacuum hose disconnected

Approximately 294 kPa (2.94 bar, 3.0 kg/cm^2, 43 psi)

If results are unsatisfactory, perform Fuel Pressure Regulator Check.

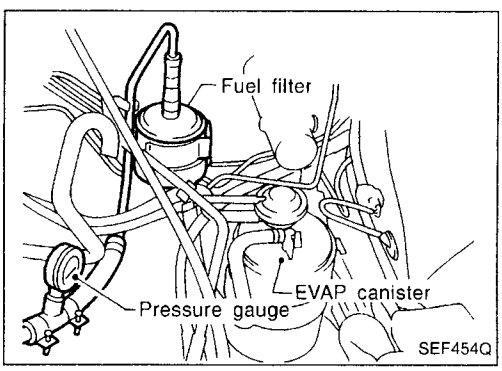

Fuel Pressure Regulator Check

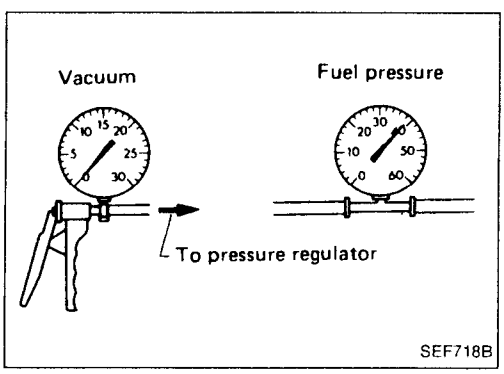

1. Stop engine and disconnect fuel pressure regulator vacuum hose from intake manifold.
2. Plug intake manifold with a rubber cap.
3. Connect variable vacuum source to fuel pressure regulator.
4. Start engine and read indication of fuel pressure gauge as vacuum is changed.

Fuel pressure should decrease as vacuum increases. If results are unsatisfactory, replace fuel pressure regulator.

Simpo PDF Merge and Split Unregistered Version - http://www.simpopdf.com

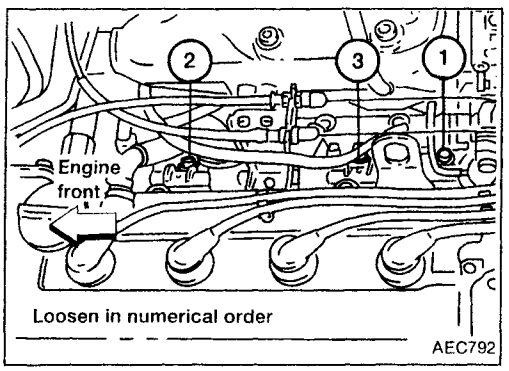

Injector Removal and Installation

1. Release fuel pressure to zero.
2. Remove injector tube assembly with injectors from intake manifold.
3. Remove injectors from injector tube assembly.
- Push injector tail piece.
- Do not pull on the connector.

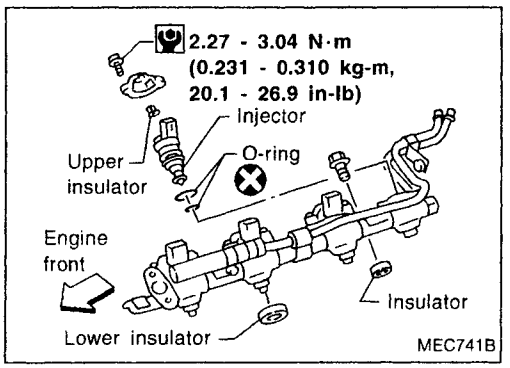

4. Install injectors.
- Clean exterior of injector tail piece.
- Use new O-rings.
- Face metal plate of upper insulator to injector.

CAUTION:
After properly connecting injectors to fuel tube assembly, check connections for fuel leakage.

5. Assemble injectors to injector tube assembly.
6. Install injector tube assembly to intake manifold.

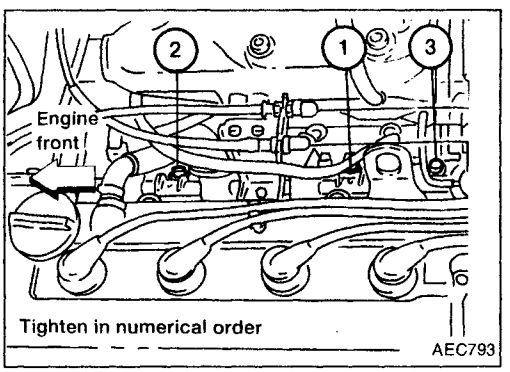

7. Tighten fuel tube bolts to 7.86 - 10.8 N·m (0.801 - 1.10 kg-m, 5.8 - 8.0 ft-lb) as shown in the figure. Then tighten the bolts to 15.7 - 20.6 N·m (1.60 - 2.10 kg-m, 11.6 - 15.2 ft-lb).

Simpo PDF Merge and Split Unregistered Version - http://www.simpopdf.com

Idle Speed/Ignition Timing/Idle Mixture Ratio Adjustment

PREPARATION

- Make sure that the following parts are in good order.

(1) Battery
(2) Ignition system
(3) Engine oil and coolant levels
(4) Fuses
(5) ECM harness connector
(6) Vacuum hoses
(7) Air intake system
(Oil filler cap, oil level gauge, etc.)
(8) Fuel pressure
(9) Engine compression
(10) Throttle valve
(11) EGR valve operation — For Europe and Israel and Australia, and GA15DE M/T models
(12) Evaporative emission system

- On models equipped with air conditioner, checks should be carried out while the air conditioner is "OFF".
- On models equipped with automatic transaxle, when checking idle speed, ignition timing and mixture ratio, checks should be carried out while shift lever is in "N" position.
- When measuring "CO" percentage, insert probe more than 40 cm (15.7 in) into tail pipe.
- Turn off headlamps, heater blower, rear defogger.
- Keep front wheels pointed straight ahead.
- Make the check after the cooling fan has stopped.

EC

Overall inspection sequence

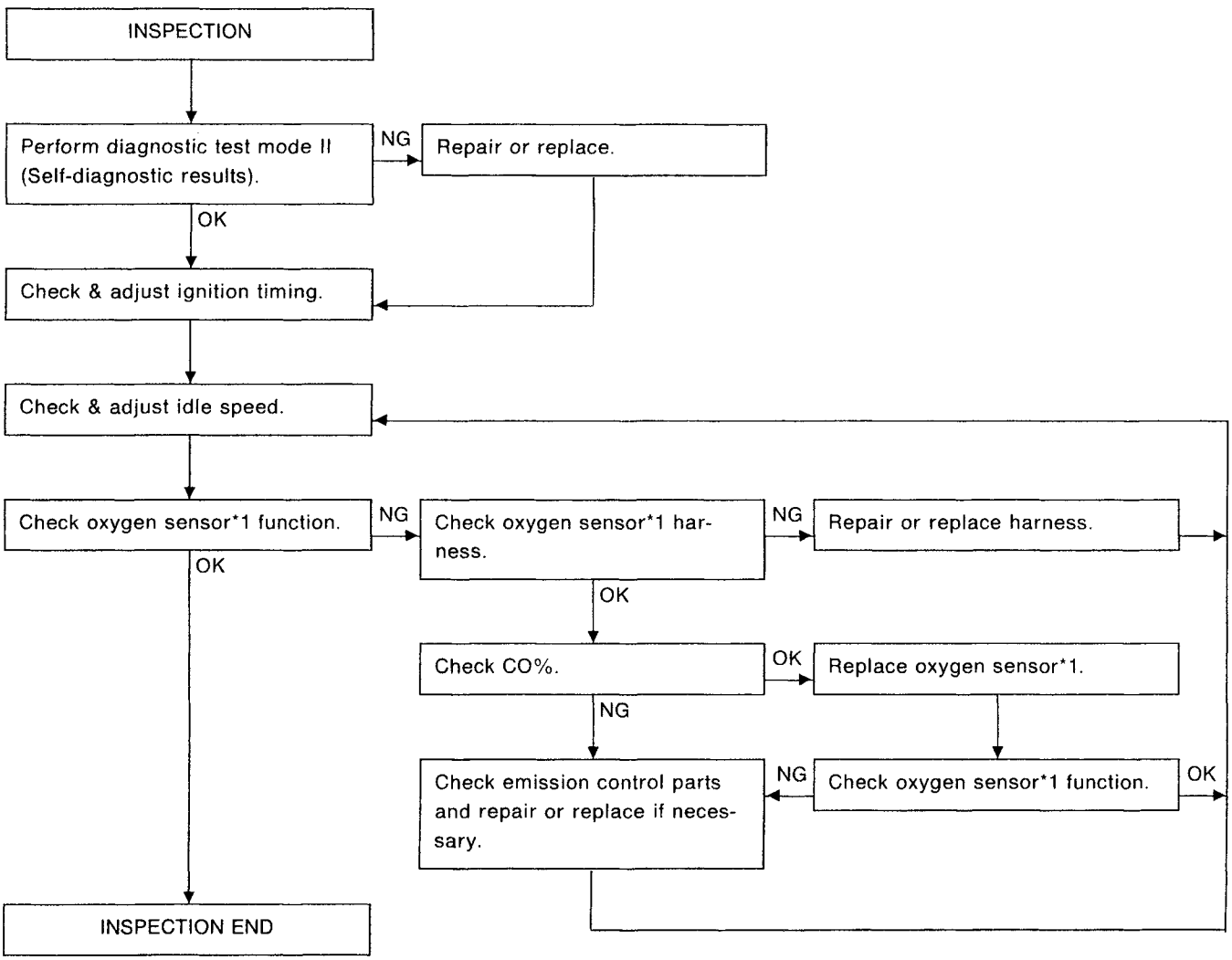

*1: Heated oxygen sensor (For Europe and Israel, and Australia A/T models)
Oxygen sensor (Except for Europe and Israel, and Australia A/T models)

Simpo PDF Merge and Split Unregistered Version - http://www.simpopdf.com

Idle Speed/Ignition Timing/Idle Mixture Ratio Adjustment (Cont'd)

ADJUSTING VALUE

Engine models	GA14DE, GA16DE (For Europe and Israel)			GA15DE		GA16DE (For Australia)		GA16DE (Except for Europe and Israel, and Australia)	
Transaxle	M/T (With daytime light system)	M/T (Without daytime light system)	A/T (in "N" position)	M/T	A/T (in "N" position)	M/T	A/T (in "N" position)	M/T	A/T (in "N" position)
Base idle speed (rpm)	625 ± 50	625 ± 50	725 ± 50	580 ± 50	700 ± 50	625 ± 50	725 ± 50	600 ± 50	750 ± 50
Idle speed (rpm)	800 ± 50	700 ± 50	800 ± 50	630 ± 50	750 ± 50	675 ± 50	800 ± 50	650 ± 50	800 ± 50
Ignition timing (°BTDC)	10 ± 2	10 ± 2	10 ± 2	6 ± 2	6 ± 2	8 ± 2	8 ± 2	10 ± 2	10 ± 2

Simpo PDF Merge and Split Unregistered Version - http://www.simpopdf.com

Idle Speed/Ignition Timing/Idle Mixture Ratio Adjustment (Cont'd)

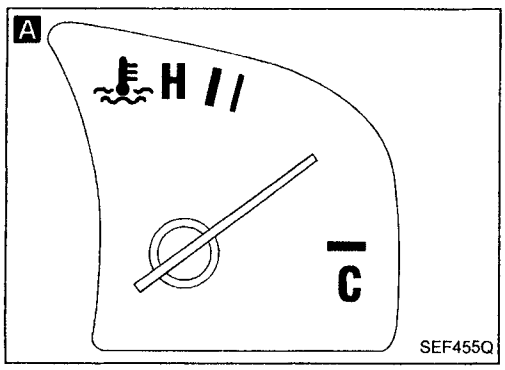

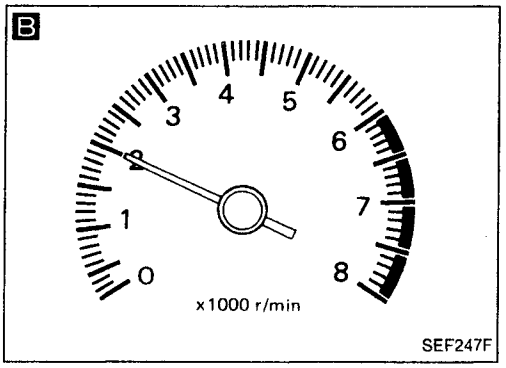

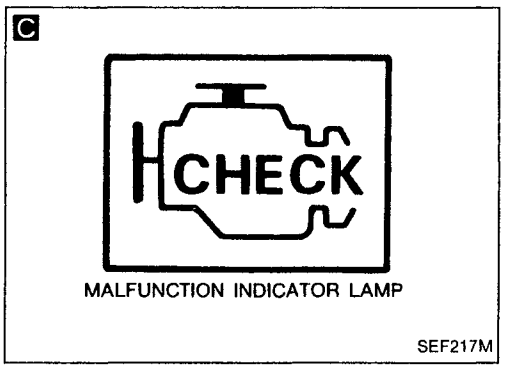

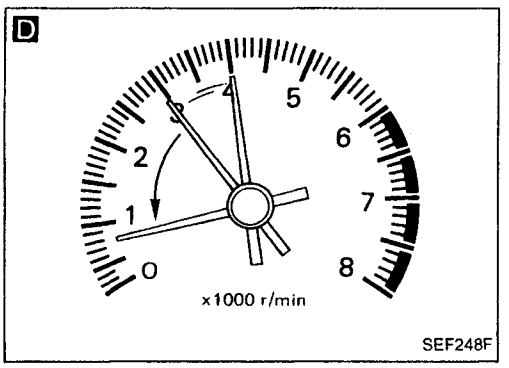

START

Visually check the following:
- Air cleaner clogging
- Hoses and ducts for leaks
- Electrical connectors
- Gasket
- Throttle valve and throttle position sensor operation

A

Start engine and warm it up until water temperature indicator points to the middle of gauge.
Ensure engine stays below 1,000 rpm.

B

Open engine hood and run engine at about 2,000 rpm for about 2 minutes under no-load.

C

Perform ECM on-board diagnostic system (Diagnostic test mode II).

OK

NG

Repair or replace components as necessary.

D

Run engine at about 2,000 rpm for about 2 minutes under no-load.
Race engine two or three times under no-load, then run engine for about 1 minute at idle speed.

Ⓐ

EC

Simpo PDF Merge and Split Unregistered Version - http://www.simpopdf.com

Idle Speed/Ignition Timing/Idle Mixture Ratio Adjustment (Cont'd)

E GA15DE

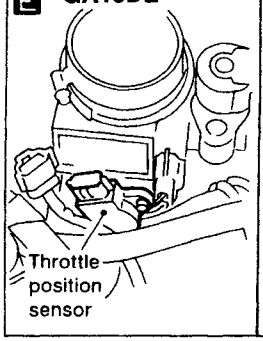

GA16DE except for Europe and Israel

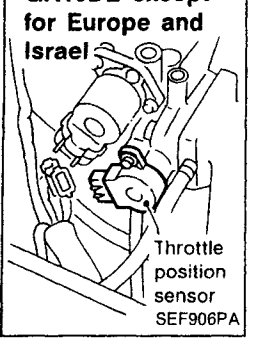

E GA14DE, GA16DE for Europe and Israel

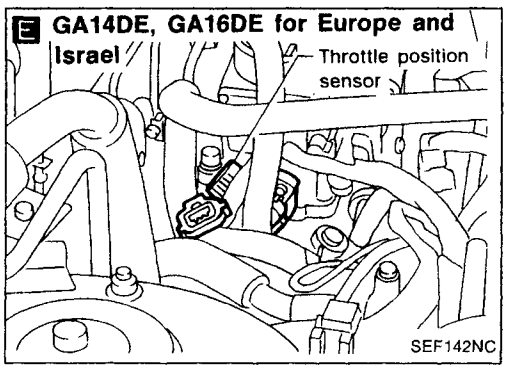

F

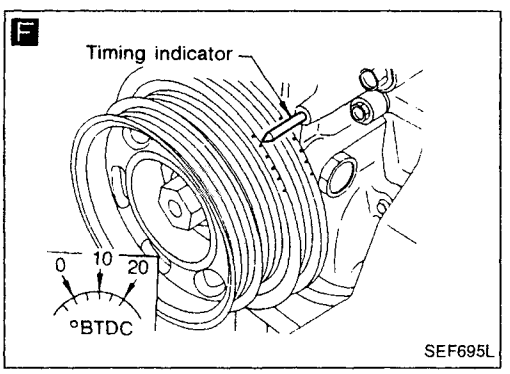

G GA15DE

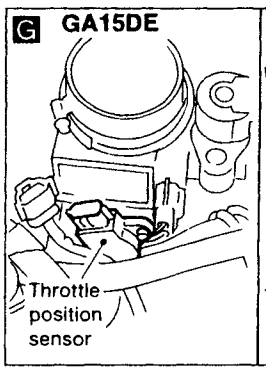

GA16DE except for Europe and Israel

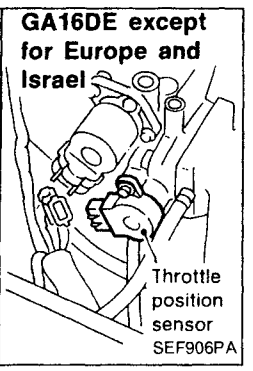

G GA14DE, GA16DE for Europe and Israel

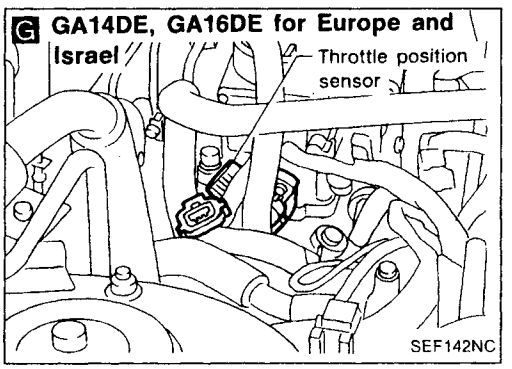

Ⓐ

E 1) Turn off engine and disconnect throttle position sensor harness connector.
2) Start engine.

Race engine (2,000 - 3,000 rpm) 2 or 3 times under no-load and then run engine at idle speed.

F

Check ignition timing with a timing light.

Ignition timing: Refer to EC-36.

OK

NG

Adjust ignition timing to the specified value by turning distributor after loosening bolts which secure distributor.

Ignition timing: Refer to EC-36.

Ⓑ

Ⓔ

G 1) Turn off engine and disconnect throttle position sensor harness connector.
2) Start engine.

Ⓒ

Ⓑ

Simpo PDF Merge and Split Unregistered Version - http://www.simpopdf.com

Idle Speed/Ignition Timing/Idle Mixture Ratio Adjustment (Cont'd)

H GA15DE

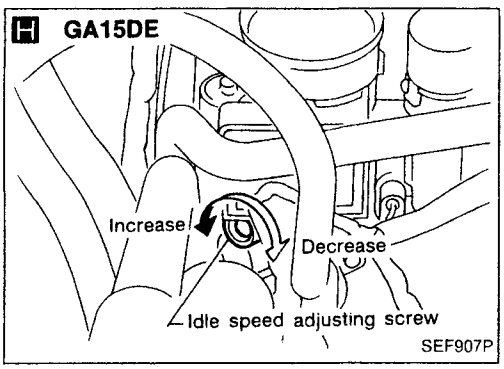

H GA16DE except for Europe and Israel

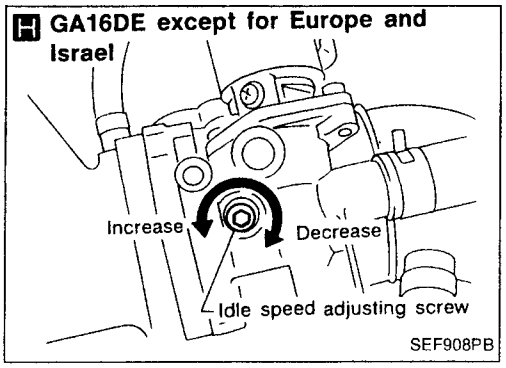

H GA14DE, GA16DE for Europe and Israel

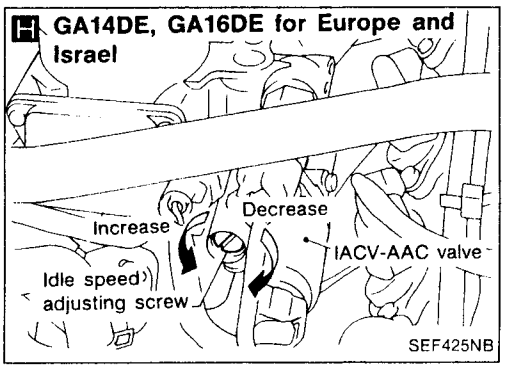

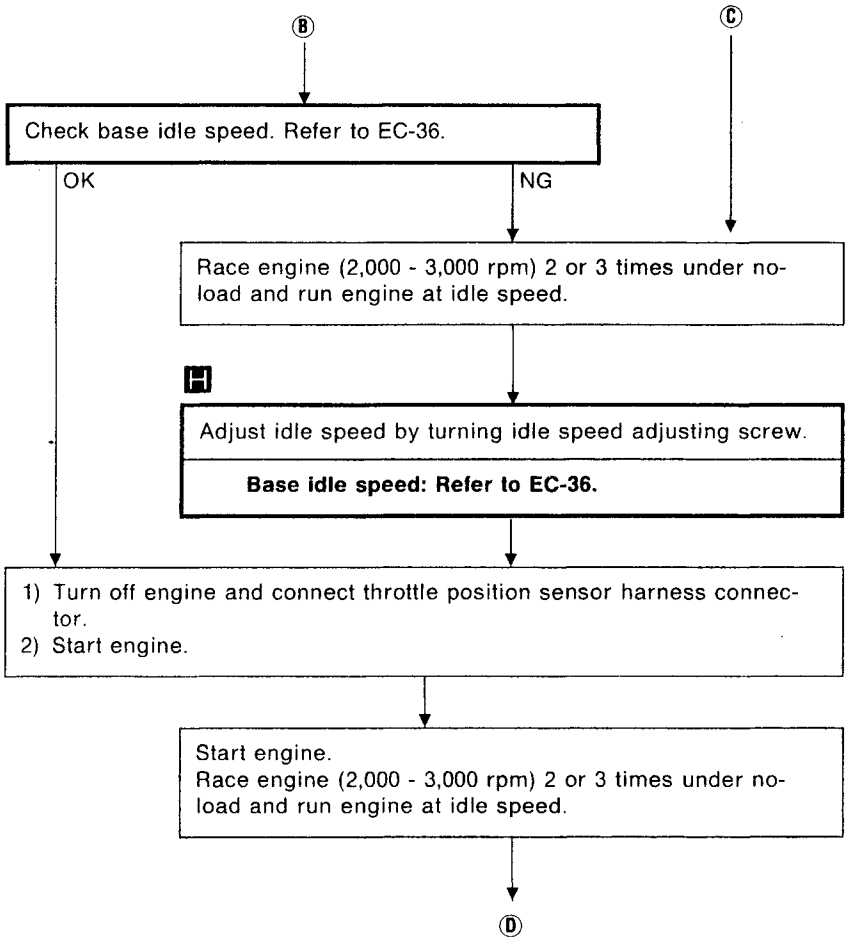

EC

Simpo PDF Merge and Split Unregistered Version - http://www.simpopdf.com

Idle Speed/Ignition Timing/Idle Mixture Ratio Adjustment (Cont'd)

I

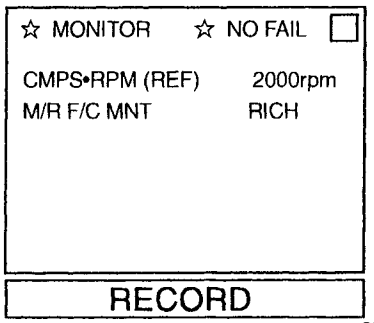

SEF515Q

J

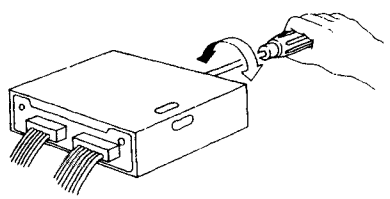

SEF987K

J

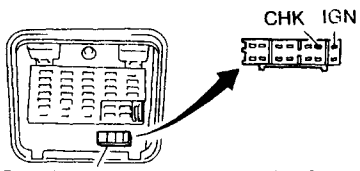

Data link connector for CONSULT (Connect CHK and IGN terminals with a suitable harness.)

SEF909P

K

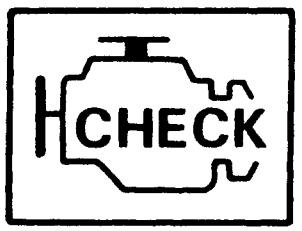

MALFUNCTION INDICATOR LAMP

SEF217M

Ⓓ

Check idle speed. Refer to EC-36.

OK

NG

Check IACV-AAC valve and replace if necessary.

Check IACV-AAC valve harness and repair if necessary.

Check ECM function* by substituting another known good ECM.

* ECM may be the cause of a problem, but this is rarely the case.

I

1. See "M/R F/C MNT" in "Data monitor" mode.
2. Run engine at about 2,000 rpm for about 2 minutes under no-load.
3. Maintaining engine at 2,000 rpm under no-load (engine is warmed up sufficiently.), check that the monitor fluctuates between "LEAN" and "RICH" more than 5 times during 10 seconds.
   1 time : RICH → LEAN → RICH
   2 times : RICH → LEAN → RICH →LEAN → RICH

NG → Ⓕ

OR

J K

1. Set "Oxygen sensor monitor" in diagnostic test mode II. (See page EC-47.)
2. Run engine at about 2,000 rpm for about 2 minutes under no-load.
3. Maintaining engine at 2,000 rpm under no-load, check that the malfunction indicator lamp on the instrument panel goes ON and OFF more than 5 times during 10 seconds.

OK

END

Simpo PDF Merge and Split Unregistered Version - http://www.simpopdf.com

Idle Speed/Ignition Timing/Idle Mixture Ratio Adjustment (Cont'd)

L For Australia

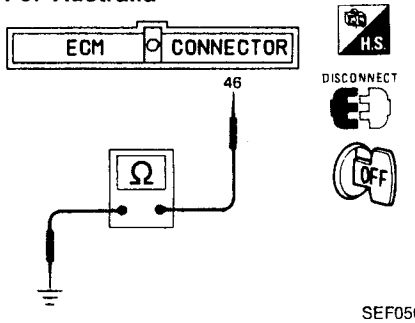

SEF056PA

L Except for Australia

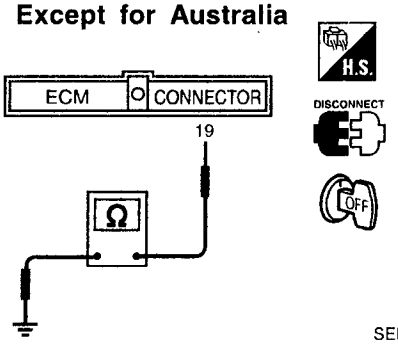

SEF194R

M

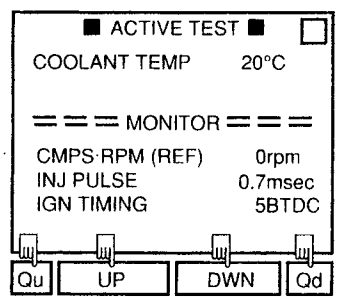

AEC681

N

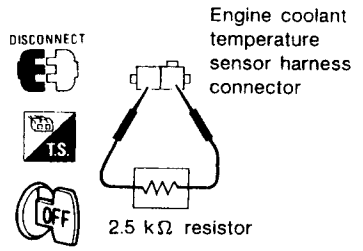

SEC242BA

O

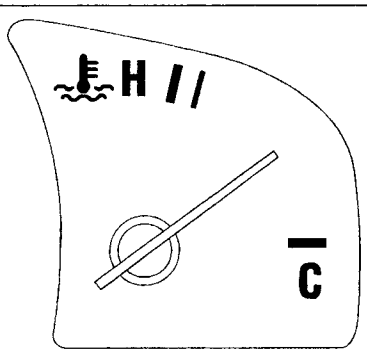

SEF455Q

Ⓕ

L

Check oxygen sensor*1 harness:
1) Turn off engine and disconnect battery ground cable.
2) Disconnect ECM harness connector from ECM.
3) Disconnect oxygen sensor*1 harness connector. Then connect harness side terminal for oxygen sensor*1 to ground with a jumper wire.
4) Check for continuity between terminal No. 46 or No. 19 of ECM harness connector and body ground.

Continuity exists .....OK
Continuity does not exist .....NG

OK / NG

NG → Repair or replace harness. → Ⓔ

OK → Connect ECM harness connector to control unit.

M N

1) Connect battery ground cable.
2) Select "ENG COOLANT TEMP" in "ACTIVE TEST" mode.
3) Set "COOLANT TEMP" to 20°C (68°F) by touching "Qu" and "Qd" and "UP", "DWN".

OR

1) Disconnect engine coolant temperature sensor harness connector.
2) Connect a resistor (2.5 kΩ) between terminals of engine coolant temperature sensor harness connector.

O

Start engine and warm it up until water temperature indicator points to middle of gauge.

Ⓖ

*1: Heated oxygen sensor (For Europe and Israel, and Australia A/T models)
Oxygen sensor (Except for Europe and Israel, and Australia A/T models)

EC

Simpo PDF Merge and Split Unregistered Version - http://www.simpopdf.com

Idle Speed/Ignition Timing/Idle Mixture Ratio Adjustment (Cont'd)

P

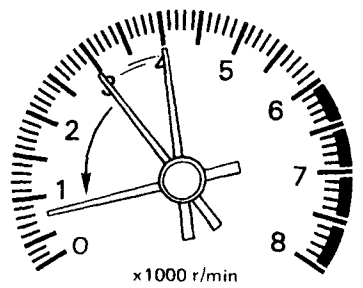

SEF248F

Q

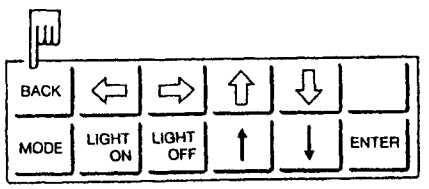

SEF913J

R

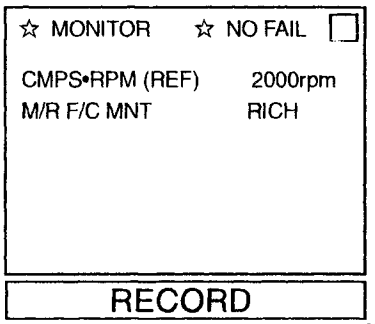

SEF515Q

S

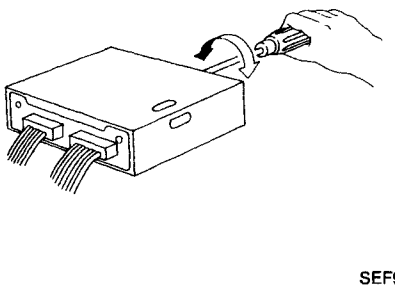

SEF987K

S

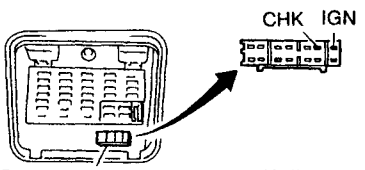

Data link connector for CONSULT (Connect CHK and IGN terminals with a suitable harness.)

SEF909P

Ⓖ

P

Race engine two or three times under no-load, then run engine at idle speed.

Check "CO"%.

Idle CO: Less than 10%

Q

After checking CO%,

1) Touch "BACK".

1) Disconnect the resistor from terminals of engine coolant temperature sensor harness connector.
2) Connect engine coolant temperature sensor harness connector to engine coolant temperature sensor.

NG

OK

Replace oxygen sensor*1.

R

1. See "M/R F/C MNT" in "Data monitor" mode.
2. Maintaining engine at 2,000 rpm under no-load (engine is warmed up sufficiently.), check that the monitor fluctuates between "LEAN" and "RICH" more than 5 times during 10 seconds.
   1 time : RICH → LEAN → RICH
   2 times : RICH → LEAN → RICH → LEAN → RICH

OR

S

1. Set "Oxygen sensor monitor" in diagnostic test mode II.
   (See page EC-47.)
2. Maintaining engine at 2,000 rpm under no-load, check that the malfunction indicator lamp on the instrument panel goes ON and OFF more than 5 times during 10 seconds.

NG

OK

Ⓗ

Ⓔ

*1: Heated oxygen sensor (For Europe and Israel, and Australia A/T models)
Oxygen sensor (Except for Europe and Israel, and Australia A/T models)

Simpo PDF Merge and Split Unregistered Version - http://www.simpopdf.com

Idle Speed/Ignition Timing/Idle Mixture Ratio Adjustment (Cont'd)

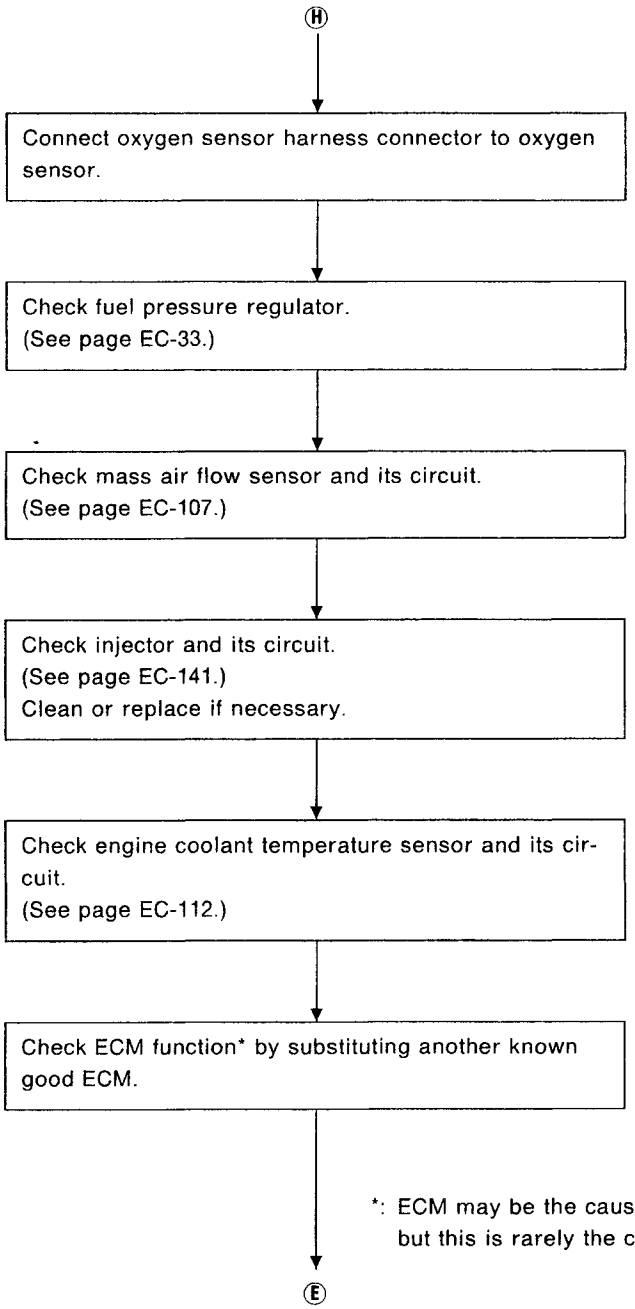

Simpo PDF Merge and Split Unregistered Version - http://www.simpopdf.com

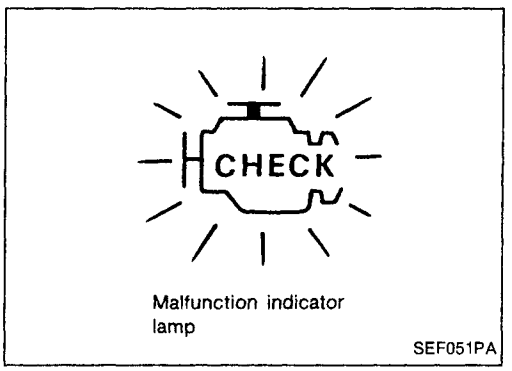

Malfunction indicator lamp
SEF051PA

Malfunction Indicator Lamp (MIL)

1. The malfunction indicator lamp will light up when the ignition switch is turned ON without the engine running. This is a bulb check.
- If the malfunction indicator lamp does not light up, refer to EL section ("WARNING LAMPS AND CHIME") or see EC-223.
2. When the engine is started, the malfunction indicator lamp should go off.

Condition		Diagnostic Test Mode I	Diagnostic Test Mode II
Ignition switch in "ON" position	Engine stopped	BULB CHECK	SELF-DIAGNOSTIC RESULTS
	Engine running	MALFUNCTION WARNING	*1 OXYGEN SENSOR MONITOR

*1: Heated oxygen sensor (For Europe and Israel, and Australia A/T models)
Oxygen sensor (Except for Europe and Israel, and Australia A/T models)

Simpo PDF Merge and Split Unregistered Version - http://www.simpopdf.com

Malfunction Indicator Lamp (MIL) (Cont'd)

HOW TO SWITCH DIAGNOSTIC TEST MODES

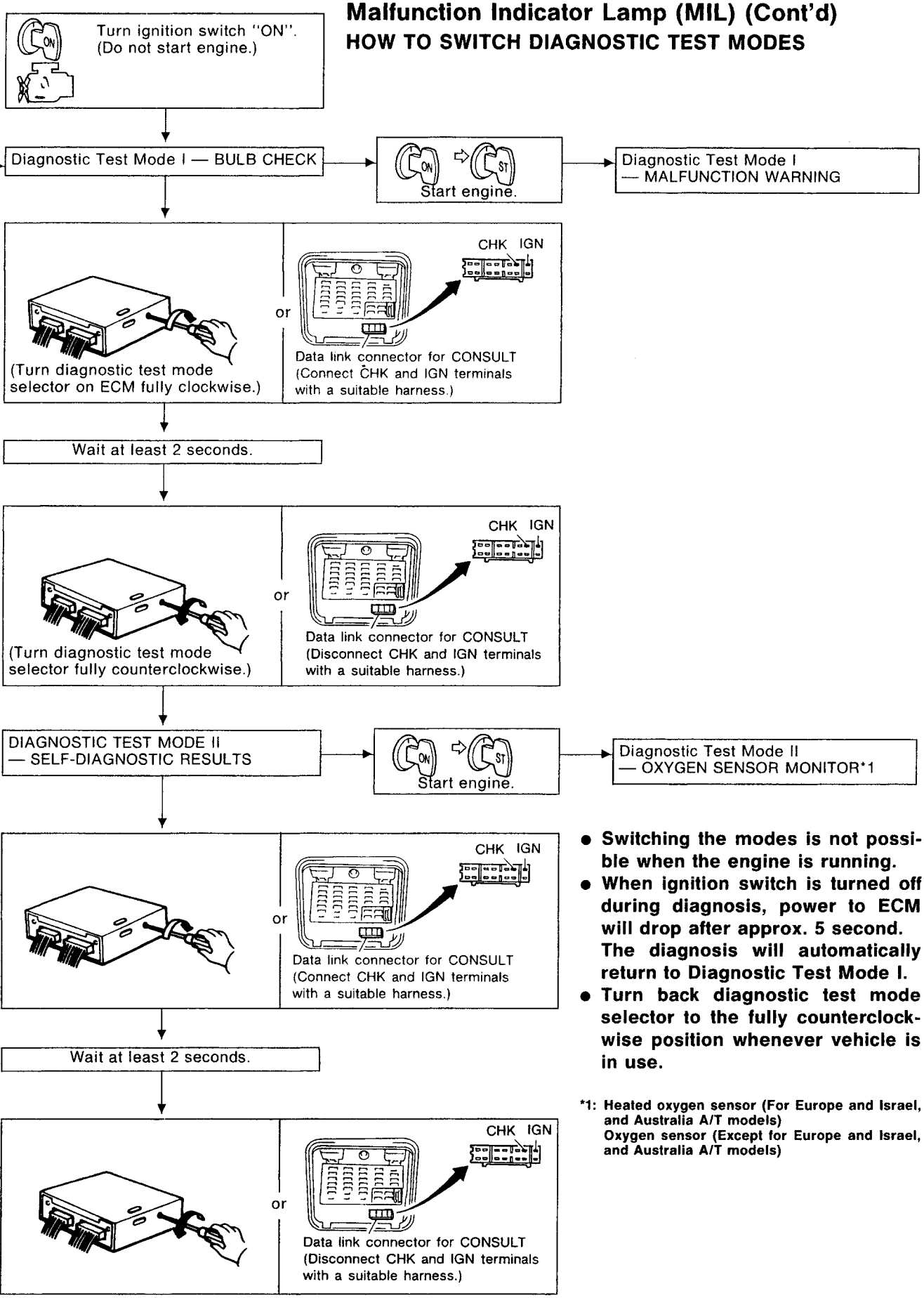

- **Switching the modes is not possible when the engine is running.**
- **When ignition switch is turned off during diagnosis, power to ECM will drop after approx. 5 second. The diagnosis will automatically return to Diagnostic Test Mode I.**
- **Turn back diagnostic test mode selector to the fully counterclockwise position whenever vehicle is in use.**

***1: Heated oxygen sensor (For Europe and Israel, and Australia A/T models)**
Oxygen sensor (Except for Europe and Israel, and Australia A/T models)

EC

Simpo PDF Merge and Split Unregistered Version - http://www.simpopdf.com

Malfunction Indicator Lamp (MIL) (Cont'd)

DIAGNOSTIC TEST MODE I—BULB CHECK

In this mode, the MALFUNCTION INDICATOR LAMP on the instrument panel should stay ON. If it remains OFF, check the bulb. Refer to EL section ("WARNING LAMPS AND CHIME") or see EC-223.

DIAGNOSTIC TEST MODE I—MALFUNCTION WARNING

MALFUNCTION INDICATOR LAMP	Condition
ON	Engine coolant temperature sensor circuit malfunction or overheating is detected, or the ECM's CPU is malfunctioning.
OFF	No malfunction.

- These Diagnostic Trouble Code Numbers are clarified in Diagnostic Test Mode II (SELF-DIAGNOSTIC RESULTS).

DIAGNOSTIC TEST MODE II—SELF-DIAGNOSTIC RESULTS

In this mode, a diagnostic trouble code is indicated by the number of blinks of the MALFUNCTION INDICATOR LAMP as shown below.

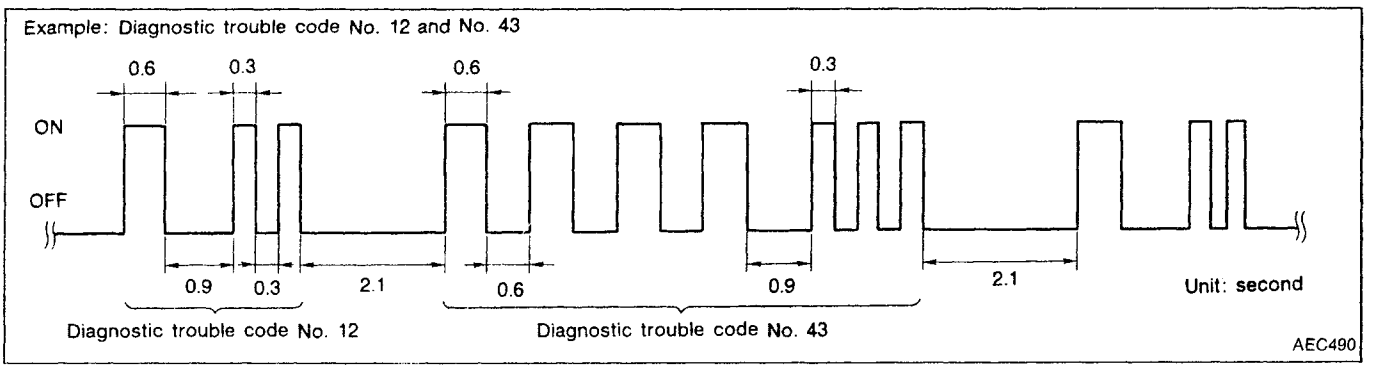

Long (0.6 second) blinking indicates the number of ten digits, and short (0.3 second) blinking indicates the number of single digits. For example, the malfunction indicator lamp blinks 4 times for about 2.5 seconds (0.6 sec x 4 times) and then it blinks three times for about 1 second (0.3 sec x 3 times). This indicates the DTC "43" and refers to the malfunction of the throttle position sensor.
In this way, all the detected malfunctions are classified by their diagnostic trouble code numbers. The DTC "55" refers to no malfunction. (See DIAGNOSTIC TROUBLE CODE CHART, refer to EC-62.)

HOW TO ERASE DIAGNOSTIC TEST MODE II (Self-diagnostic results)

The diagnostic trouble code can be erased from the backup memory in the ECM when the diagnostic test mode is changed from Diagnostic Test Mode II to Diagnostic Test Mode I. (Refer to "HOW TO SWITCH DIAGNOSTIC TEST MODES" on previous page.)

- **If the battery terminal is disconnected, the diagnostic trouble code will be lost from the backup memory within 24 hours.**
- **Be careful not to erase the stored memory before starting trouble diagnoses.**

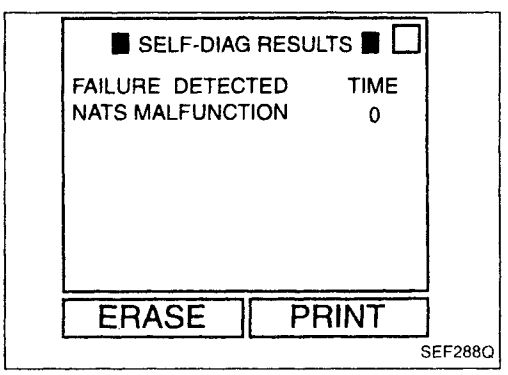

- **If the MIL blinks or "NATS MALFUNCTION" is displayed on "SELF-DIAG RESULTS" screen, perform self-diagnostic results mode with CONSULT using NATS program card (NATS-E940). Refer to EL section.**
- **Confirm no self-diagnostic results of NATS is displayed before touching "ERASE" in "SELF-DIAG RESULTS" mode with CONSULT.**
- **When replacing ECM, initialisation of NATS V2.0 system and registration of all NATS V2.0 ignition key IDs must be carried out with CONSULT using NATS program card (NATS-E940).**
  Therefore, be sure to receive all keys from vehicle owner.
  Regarding the procedures of NATS initialisation and NATS ignition key ID registration, refer to CONSULT operation manual, NATS V2.0.

Simpo PDF Merge and Split Unregistered Version - http://www.simpopdf.com

Malfunction Indicator Lamp (MIL) (Cont'd)

DIAGNOSTIC TEST MODE II—OXYGEN SENSOR*1 MONITOR

In this mode, the MALFUNCTION INDICATOR LAMP displays the condition of the fuel mixture (lean or rich) which is monitored by the oxygen sensor*1.

MALFUNCTION INDICATOR LAMP	Fuel mixture condition in the exhaust gas	Air fuel ratio feedback control condition
ON	Lean	Closed loop system
OFF	Rich	
*2 Remains ON or OFF	Any condition	Open loop system

*2: Maintains conditions just before switching to open loop.

To check the oxygen sensor*1 function, start engine in Diagnostic Test Mode II. Then warm it up until engine coolant temperature indicator points to middle of gauge.
Next run engine at about 2,000 rpm for about 2 minutes under no-load conditions. Make sure that the MALFUNCTION INDICATOR LAMP comes ON more than 5 times within 10 seconds with engine running at 2,000 rpm under no-load.

*1: Heated oxygen sensor (For Europe and Israel, and Australia A/T models)
Oxygen sensor (Except for Europe and Israel, and Australia A/T models)

EC

Simpo PDF Merge and Split Unregistered Version - http://www.simpopdf.com

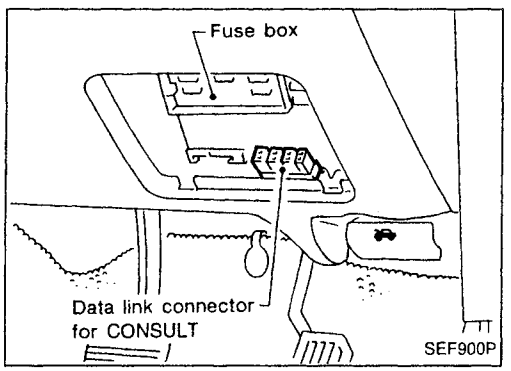

CONSULT

CONSULT INSPECTION PROCEDURE

1. Turn off ignition switch.
2. Connect "CONSULT" to data link connector for CONSULT. (Data link connector for CONSULT is located behind the fuse box cover.)

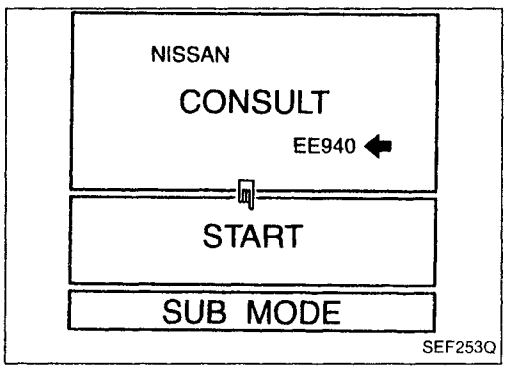

3. Turn on ignition switch.
4. Touch "START".

⬅: Program card
AE930: For Australia
EE940: Except for Australia

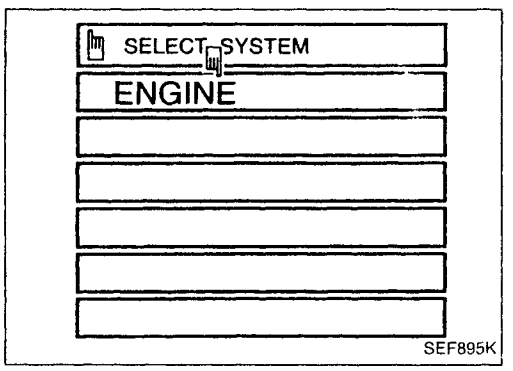

5. Touch "ENGINE".

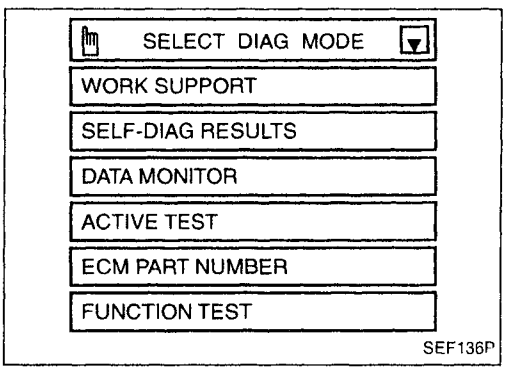

6. Perform each diagnostic test mode according to each service procedure.

For further information, see the CONSULT Operation Manual.

Simpo PDF Merge and Split Unregistered Version - http://www.simpopdf.com

CONSULT (Cont'd)

ECCS COMPONENT PARTS/CONTROL SYSTEMS APPLICATION

Item			DIAGNOSTIC TEST MODE				
			WORK SUPPORT	SELF-DIAGNOSTIC RESULTS	DATA MONITOR	ACTIVE TEST	FUNCTION TEST
ECCS COMPONENT PARTS	INPUT	Camshaft position sensor		X	X		
		Mass air flow sensor		X	X		
		Engine coolant temperature sensor		X	X	X	
		Oxygen sensor*1		X	X		X
		Vehicle speed sensor			X		X
		Throttle position sensor	X	X	X		X
		Intake air temperature sensor*2		X	X		
		Knock sensor*3		X			
		Ignition switch (start signal)			X		X
		Closed throttle position			X		X
		Air conditioner switch			X		
		Park/Neutral position switch			X		X
		Power steering oil pressure switch			X		X
		Electrical load signal			X		
		Battery voltage			X		
	OUTPUT	Injectors			X	X	X
		Power transistor (Ignition timing)	X	X (Ignition signal)	X	X	X
		IACV-AAC valve	X		X	X	X
		Valve timing control solenoid valve			X	X	X
		Air conditioner relay			X		
		Fuel pump relay	X		X	X	X
		Cooling fan			X	X	X
		EVAP canister purge control solenoid valve*4			X	X	X
		EGR valve & EVAP canister purge control solenoid valve*5			X	X	X

X: Applicable
*1: Heated oxygen sensor (For Europe and Israel, and Australia A/T models)
Oxygen sensor (Except for Europe and Israel, and Australia A/T models)
*2: For Australia
*3: Except for Australia
*4: GA16DE M/T models except for Europe and Israel, and Australia
*5: For Europe and Israel and Australia, and GA15DE M/T models

EC

Simpo PDF Merge and Split Unregistered Version - http://www.simpopdf.com

CONSULT (Cont'd)

FUNCTION

Diagnostic test mode	Function
Work support	A technician can adjust some devices faster and more accurately by following indications on CONSULT.
Self-diagnostic results	Self-diagnostic results can be read and erased quickly.
Data monitor	Input/Output data in the ECM can be read.
Active test	CONSULT drives some actuators apart from the ECM's and also shifts some parameters in a specified range.
ECM part numbers	ECM part numbers can be read.
Function test	Conducted by CONSULT instead of a technician to determine whether each system is "OK" or "NG".

WORK SUPPORT MODE

WORK ITEM	CONDITION	USAGE
THRTL POS SEN ADJ	CHECK THE THROTTLE POSITION SENSOR SIGNAL. ADJUST IT TO THE SPECIFIED VALUE BY ROTATING THE SENSOR BODY UNDER THE FOLLOWING CONDITIONS. ● IGN SW "ON" ● ENG NOT RUNNING ● ACC PEDAL NOT PRESSED	When adjusting throttle position sensor initial position
IGNITION TIMING ADJ	● IGNITION TIMING FEEDBACK CONTROL WILL BE HELD BY TOUCHING "START". AFTER DOING SO, ADJUST IGNITION TIMING WITH A TIMING LIGHT BY TURNING THE CAMSHAFT POSITION SENSOR.	When adjusting initial ignition timing
IACV-AAC VALVE ADJ	SET ENGINE SPEED AT THE SPECIFIED VALUE UNDER THE FOLLOWING CONDITIONS. ● ENGINE WARMED UP ● NO-LOAD	—
FUEL PRESSURE RELEASE	● FUEL PUMP WILL STOP BY TOUCHING "START" DURING IDLING. CRANK A FEW TIMES AFTER ENGINE STALLS.	When releasing fuel pressure from fuel line

Simpo PDF Merge and Split Unregistered Version - http://www.simpopdf.com

CONSULT (Cont'd)

SELF-DIAGNOSTIC MODE

Regarding items detected in "SELF-DIAG RESULTS" mode, refer to "Diagnostic Trouble Code (DTC) Chart" (Refer to EC-62.)

DATA MONITOR MODE

Monitored item [Unit]	ECM input signals	Main signals	Description	Remarks
CMPS·RPM (REF) [rpm]	○	○	• Indicates the engine speed computed from the REF signal (180° signal) of the camshaft position sensor.	• Accuracy becomes poor if engine speed drops below the idle rpm. • If the signal is interrupted while the engine is running, an abnormal value may be indicated.
MAS AIR/FL SE [V]	○	○	• The signal voltage of the mass air flow sensor is displayed.	• When the engine is stopped, a certain value is indicated.
COOLAN TEMP/S [°C] or [°F]	○	○	• The engine coolant temperature (determined by the signal voltage of the engine coolant temperature sensor) is displayed.	• When the engine coolant temperature sensor is open or short-circuited, ECM enters fail-safe mode. The engine coolant temperature determined by the ECM is displayed.
O2 SENSOR [V]	○	○	• The signal voltage of the oxygen sensor*1 is displayed.	
M/R F/C MNT [RICH/LEAN]	○	○	• Display of oxygen sensor signal during air-fuel ratio feedback control: RICH ... means the mixture became "rich", and control is being affected toward a leaner mixture. LEAN ... means the mixture became "lean", and control is being affected toward a rich mixture.	• After turning ON the ignition switch, "RICH" is displayed until air-fuel mixture ratio feedback control begins. • When the air-fuel ratio feedback is clamped, the value just before the clamping is displayed continuously.
VHCL SPEED SE [km/h] or [mph]	○	○	• The vehicle speed computed from the vehicle speed sensor signal is displayed.	
BATTERY VOLT [V]	○	○	• The power supply voltage of ECM is displayed.	
THRTL POS SEN [V]	○	○	• The throttle position sensor signal voltage is displayed.	
INT/A TEMP SE [°C] or [°F]*2	○		• The intake air temperature determined by the signal voltage of the intake air temperature sensor is indicated.	
START SIGNAL [ON/OFF]	○	○	• Indicates [ON/OFF] condition from the starter signal.	• After starting the engine, [OFF] is displayed regardless of the starter signal.
CLSD THL/POSI [ON/OFF]	○	○	• Indicates the closed throttle position [ON/OFF] determined by the throttle position sensor signal. ON: Closed throttle position OFF: Other than closed throttle position	
AIR COND SIG [ON/OFF]	○	○	• Indicates [ON/OFF] condition of the air conditioner switch as determined by the air conditioning signal.	
P/N POSI SW [ON/OFF]	○	○	• Indicates [ON/OFF] condition from the park/neutral position switch signal.	
PW/ST SIGNAL [ON/OFF]	○	○	• Indicates [ON/OFF] condition of the power steering oil pressure switch determined by the power steering oil pressure signal.	

NOTE:
Any monitored item that does not match the vehicle being diagnosed is deleted from the display automatically.

*1: Heated oxygen sensor (For Europe and Israel, and Australia A/T models)
Oxygen sensor (Except for Europe and Israel, and Australia A/T models)
*2: For Australia

Simpo PDF Merge and Split Unregistered Version - http://www.simpopdf.com

CONSULT (Cont'd)

Monitored item [Unit]	ECM input signals	Main signals	Description	Remarks
LOAD SIGNAL [ON/OFF]	○	○	• Indicates [ON/OFF] condition from the rear defogger signal and/or lighting switch. ON: Rear defogger is operating and/or lighting switch is on. OFF: Rear defogger is not operating and lighting switch is not on.	
INJ PULSE [msec]		○	• Indicates the actual fuel injection pulse width compensated by ECM according to the input signals.	• When the engine is stopped, a certain computed value is indicated.
IGN TIMING [BTDC]		○	• Indicates the ignition timing computed by ECM according to the input signals.	
IACV-AAC/V [%]		○	• Indicates the idle air control valve (AAC valve) control value computed by ECM according to the input signals.	
A/F ALPHA [%]		○	• Indicates the mean value of the air-fuel ratio feedback correction factor per cycle.	• When the engine is stopped, a certain value is indicated. • This data also includes the data for the air-fuel ratio learning control.
AIR COND RLY [ON/OFF]		○	• Indicates the air conditioner relay control condition (determined by ECM according to the input signal).	
COOLING FAN*2 [ON/OFF] or [LOW/HI/OFF]		○	• Indicates the control condition of the cooling fans (determined by ECM according to the input signal). ON ... Operating LOW ... Operates at low speed HI ... Operates at high speed OFF ... Stopped	
FUEL PUMP RLY [ON/OFF]		○	• Indicates the fuel pump relay control condition determined by ECM according to the input signals.	
VALVE TIM SOL*1 [ON/OFF]			• The control condition of the valve timing solenoid valve (determined by ECM according to the input signal) is indicated. ON ... VTC operating OFF ... VTC not operating	
EGRC SOL/V (EVAP canister purge control solenoid valve or EGR & EVAP canister purge control solenoid valve) [ON/OFF]		○	• Indicates the control condition of the EVAP canister purge control solenoid valve or EGR valve & EVAP canister purge control solenoid valve (determined by ECM according to the input signal). ON ... EVAP canister purge operation cut-off OFF ... EVAP canister purge operation not cut-off	
VOLTAGE [V]			• Voltage measured by the voltage probe.	
PULSE [msec] or [Hz] or [%]			• Pulse width, frequency or duty cycle measured by the pulse probe.	• Only "#" is displayed if item is unable to be measured. • Figures with "#"s are temporary ones. They are the same figures as an actual piece of data which was just previously measured.

*1: GA16DE except for Europe and Israel
*2: GA16DE engine A/T models for Europe without heavy duty kit have a 2- step control [ON/OFF] system. "LOW" and "HI" are shown on CONSULT screen to represent "ON" condition.

Simpo PDF Merge and Split Unregistered Version - http://www.simpopdf.com

CONSULT (Cont'd)

ACTIVE TEST MODE

TEST ITEM	CONDITION	JUDGEMENT	CHECK ITEM (REMEDY)
FUEL INJECTION	• Engine: Return to the original trouble condition • Change the amount of fuel injection using CONSULT.	If trouble symptom disappears, see CHECK ITEM.	• Harness and connector • Fuel injectors • Oxygen sensor*1
IACV-AAC/V OPENING	• Engine: After warming up, idle the engine. • Change the IACV-AAC valve opening percent using CONSULT.	Engine speed changes according to the opening percent.	• Harness and connector • IACV-AAC valve
ENG COOLANT TEMP	• Engine: Return to the original trouble condition • Change the engine coolant temperature indication using CONSULT.	If trouble symptom disappears, see CHECK ITEM.	• Harness and connector • Engine coolant temperature sensor • Fuel injectors
IGNITION TIMING	• Engine: Return to the original trouble condition • Timing light: Set • Retard the ignition timing using CONSULT.	If trouble symptom disappears, see CHECK ITEM.	• Adjust initial ignition timing
POWER BALANCE	• Engine: After warming up, idle the engine. • A/C switch "OFF" • Shift lever "N" • Cut off each injector signal one at a time using CONSULT.	Engine runs rough or dies.	• Harness and connector • Compression • Injectors • Power transistor • Spark plugs • Ignition coils
COOLING FAN*3	• Ignition switch: ON • Turn the cooling fan "ON" and "OFF", or "LOW" and "HI" and "OFF" using CONSULT.	Cooling fan moves and stops.	• Harness and connector • Cooling fan motor
FUEL PUMP RELAY	• Ignition switch: ON (Engine stopped) • Turn the fuel pump relay "ON" and "OFF" using CONSULT and listen to operating sound.	Fuel pump relay makes the operating sound.	• Harness and connector • Fuel pump relay
EGRC SOLENOID VALVE (EVAP canister purge control solenoid valve or EGR valve & EVAP canister purge control solenoid valve)	• Ignition switch: ON • Turn solenoid valve "ON" and "OFF" with the CONSULT and listen to operating sound.	Solenoid valve makes an operating sound.	• Harness and connector • Solenoid valve
VALVE TIMING SOL*2	• Ignition switch: ON • Turn solenoid valve "ON" and "OFF" using CONSULT and listen to operating sound.	Solenoid valve makes an operating sound.	• Harness and connector • Solenoid valve
SELF-LEARNING CONT	• In this test, the coefficient of self-learning control mixture ratio returns to the original coefficient by touching "CLEAR" on the screen.		

*1: Heated oxygen sensor (For Europe and Israel, and Australia A/T models)
Oxygen sensor (Except for Europe and Israel, and Australia A/T models)
*2: GA16DE except for Europe and Israel
*3: GA16DE engine A/T models for Europe without heavy duty kit have a 2- step control [ON/OFF] system. "LOW" and "HI" are shown on CONSULT screen to represent "ON" condition.

EC

Simpo PDF Merge and Split Unregistered Version - http://www.simpopdf.com

CONSULT (Cont'd)

FUNCTION TEST MODE

FUNCTION TEST ITEM	CONDITION	JUDGEMENT		CHECK ITEM (REMEDY)
SELF-DIAG RESULTS	• Ignition switch: ON (Engine stopped) • Displays the results of on-board diagnostic system.	—		Objective system
CLOSED THROTTLE POSI	• Ignition switch: ON (Engine stopped) • Closed throttle position is tested when throttle is opened and closed fully. (Closed throttle position is selected by throttle position sensor.)	Throttle valve: opened	OFF	• Harness and connector • Throttle position sensor • Throttle position sensor adjustment • Throttle linkage • Verify operation in DATA MONITOR mode.
		Throttle valve: closed	ON	
THROTTLE POSI SEN CKT	• Ignition switch: ON (Engine stopped) • Throttle position sensor circuit is tested when throttle is opened and closed fully.	Range (Throttle valve fully opened — Throttle valve fully closed)	More than 3.0V	• Harness and connector • Throttle position sensor • Throttle position sensor adjustment • Throttle linkage • Verify operation in DATA MONITOR mode.
PARK/NEUT POSI SW CKT	• Ignition switch: ON (Engine stopped) • Inhibitor/Neutral position switch circuit is tested when shift lever is manipulated.	Out of N/P positions	OFF	• Harness and connector • Neutral position switch or inhibitor switch • Linkage or inhibitor switch adjustment
		In N/P positions	ON	
FUEL PUMP CIRCUIT	• Ignition switch: ON (Engine stopped) • Fuel pump circuit is tested by checking the pulsation in fuel pressure when fuel tube is pinched.	There is pressure pulsation on the fuel feed hose.		• Harness and connector • Fuel pump • Fuel pump relay • Fuel filter clogging • Fuel level
EGRC SOL/V CIRCUIT (EVAP canister purge control solenoid valve or EGR valve & EVAP canister purge control solenoid valve)	• Ignition switch: ON (Engine stopped) • EVAP canister purge control solenoid valve or EGR valve & EVAP canister purge control solenoid valve circuit is tested by checking solenoid valve operating noise.	The solenoid valve makes an operating sound every 3 seconds.		• Harness and connector • EVAP canister purge control solenoid valve or EGR valve & EVAP canister purge control solenoid valve
VALVE TIMING S/V CKT*1	• Ignition switch: ON (Engine stopped) • Valve timing S/V circuit is tested by checking solenoid valve operating sound	The solenoid valve makes an operating sound periodically.		• Harness and connector • Valve timing solenoid valve

*1: GA16DE except for Europe and Israel

Simpo PDF Merge and Split Unregistered Version - http://www.simpopdf.com

CONSULT (Cont'd)

FUNCTION TEST ITEM	CONDITION	JUDGEMENT		CHECK ITEM (REMEDY)
COOLING FAN CIRCUIT	● Ignition switch: ON (Engine stopped) ● Cooling fan circuit is tested when cooling fan is rotated.	The cooling fan rotates and stops every 3 seconds.		● Harness and connector ● Cooling fan motor ● Cooling fan relay
START SIGNAL CIRCUIT	● Ignition switch: ON → START ● Start signal circuit is tested when engine is started by operating the starter. Before cranking, battery voltage and engine coolant temperature are displayed. During cranking, average battery voltage, mass air flow sensor output voltage and cranking speed are displayed.	Start signal: OFF → ON		● Harness and connector ● Ignition switch
PW/ST SIGNAL CIRCUIT	● Ignition switch: ON (Engine running) ● Power steering circuit is tested when steering wheel is rotated fully and then set to a straight line running position.	Locked position	ON	● Harness and connector ● Power steering oil pressure switch ● Power steering pump
		Neutral position	OFF	
VEHICLE SPEED SEN CKT	● Vehicle speed sensor circuit is tested when vehicle is running at a speed of 10 km/h (6 MPH) or higher.	Vehicle speed sensor input signal is greater than 4 km/h (2 MPH)		● Harness and connector ● Vehicle speed sensor ● Electric speedometer
IGN TIMING ADJ	● After warming up, idle the engine. ● Ignition timing adjustment is checked by reading ignition timing with a timing light and checking whether it agrees with specifications.	The timing light indicates the same value on the screen.		● Adjust ignition timing (by moving camshaft position sensor or distributor) ● Camshaft position sensor drive mechanism
MIXTURE RATIO TEST	● Air-fuel ratio feedback circuit (injection system, ignition system, vacuum system, etc.) is tested by examining the oxygen sensor*1 output at 2,000 rpm under non-loaded state.	Oxygen sensor*1 COUNT: More than 5 times during 10 seconds		● INJECTION SYS (Injector, fuel pressure regulator, harness or connector) ● IGNITION SYS (Spark plug, power transistor, ignition coil, harness or connector) ● VACUUM SYS (Intake air leaks) ● Oxygen sensor*1 circuit ● Oxygen sensor*1 operation ● Fuel pressure high or low ● Mass air flow sensor

*1: Heated oxygen sensor (For Europe and Israel, and Australia A/T models)
Oxygen sensor (Except for Europe and Israel, and Australia A/T models)

EC

Simpo PDF Merge and Split Unregistered Version - http://www.simpopdf.com

CONSULT (Cont'd)

FUNCTION TEST ITEM	CONDITION	JUDGEMENT	CHECK ITEM (REMEDY)
POWER BALANCE	• After warming up, idle the engine. • Injector operation of each cylinder is stopped one after another, and resultant change in engine rotation is examined to evaluate combustion of each cylinder. (This is only displayed for models where a sequential multiport fuel injection system is used.)	Difference in engine speed is greater than 25 rpm before and after cutting off the injector of each cylinder.	• Injector circuit (Injector, harness or connector) • Ignition circuit (Spark plug, power transistor, ignition coil, harness or connector) • Compression • Valve timing
IACV-AAC/V SYSTEM	• After warming up, idle the engine. • IACV-AAC valve system is tested by detecting change in engine speed when IACV-AAC valve opening is changed to 0%, 20% and 80%.	Difference in engine speed is greater than 150 rpm between when valve opening is at 80% and at 20%.	• Harness and connector • IACV-AAC valve • Air passage restriction between air inlet and IACV-AAC valve • IAS (Idle adjusting screw) adjustment

Simpo PDF Merge and Split Unregistered Version - http://www.simpopdf.com

CONSULT (Cont'd)

REAL TIME DIAGNOSIS IN DATA MONITOR MODE

CONSULT has two kinds of triggers and they can be selected by touching "SETTING" in "DATA MONITOR" mode.

1. "AUTO TRIG" (Automatic trigger):
   - The malfunction will be identified on the CONSULT screen in real time.
     In other words, DTC and malfunction item will be displayed at the moment the malfunction is detected by ECM.
     DATA MONITOR can be performed continuously until a malfunction is detected. However, DATA MONITOR cannot continue any longer after the malfunction detection.
2. "MANU TRIG" (Manual trigger):
   - DTC and malfunction item will not be displayed automatically on CONSULT screen even though a malfunction is detected by ECM.
     DATA MONITOR can be performed continuously even though a malfunction is detected.

Use these triggers as follows:

1. "AUTO TRIG"
   - While trying to detect the DTC by performing the "DTC CONFIRMATION PROCEDURE", be sure to select to "DATA MONITOR (AUTO TRIG)" mode. You can confirm the malfunction at the moment it is detected.
   - While narrowing down the possible causes, CONSULT should be set in "DATA MONITOR (AUTO TRIG)" mode, especially in case the incident is intermittent.
     Inspect the circuit by gently shaking (or twisting) suspicious connectors, components and harness in the "DTC CONFIRMATION PROCEDURE". The moment a malfunction is found the DTC will be displayed. (Refer to GI section, "Incident Simulation Tests" in "HOW TO PERFORM EFFICIENT DIAGNOSIS FOR AN ELECTRICAL INCIDENT".)
2. "MANU TRIG"
   - If the malfunction is displayed as soon as "DATA MONITOR" is selected, reset CONSULT to "MANU TRIG". By selecting "MANU TRIG" you can monitor and store the data. The data can be utilized for further diagnosis, such as a comparison with the value for the normal operating condition.

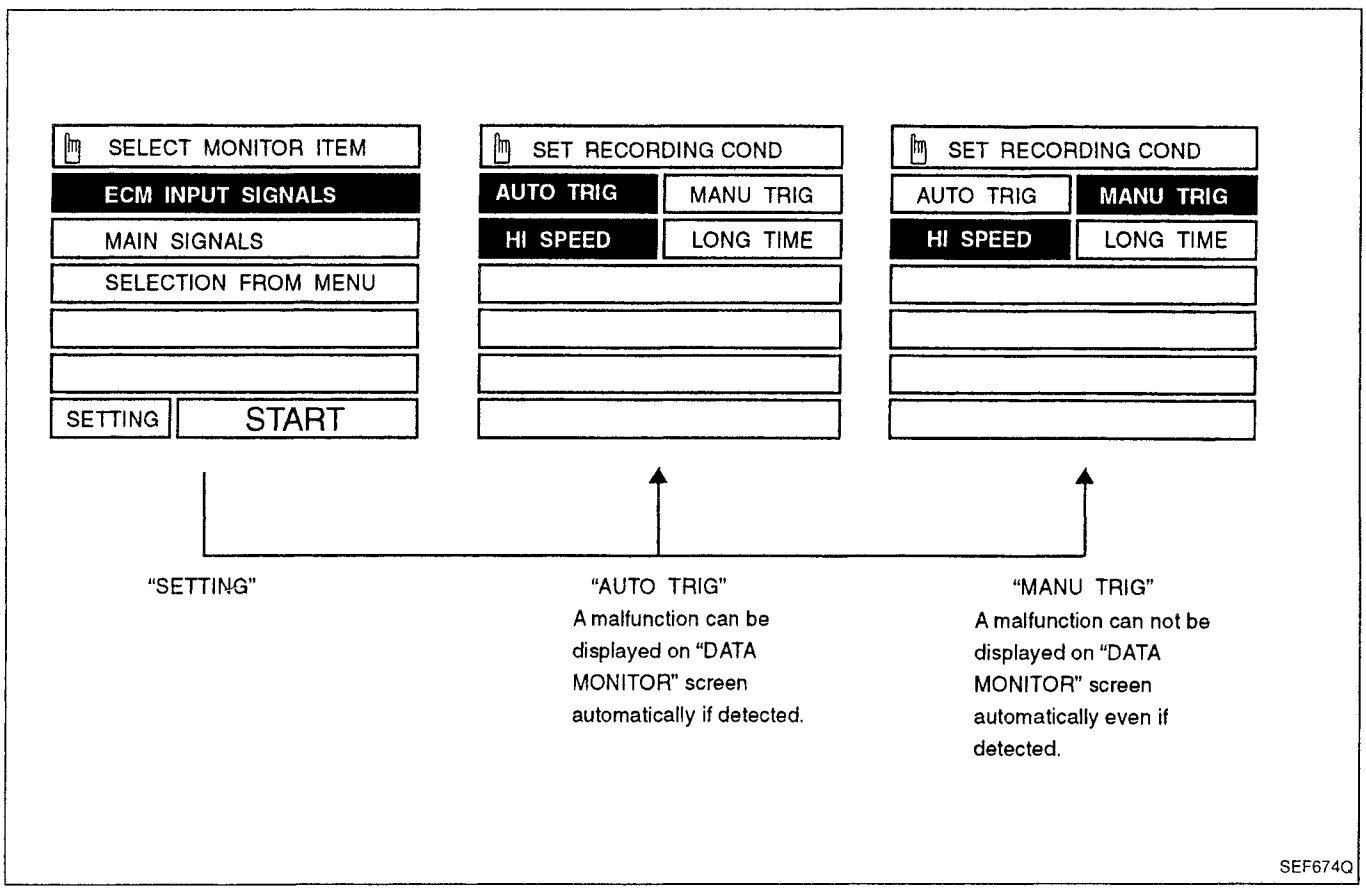

Simpo PDF Merge and Split Unregistered Version - http://www.simpopdf.com

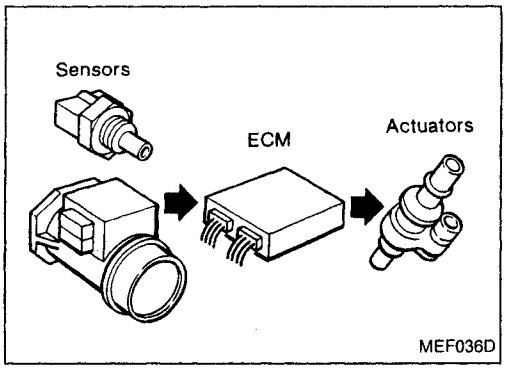

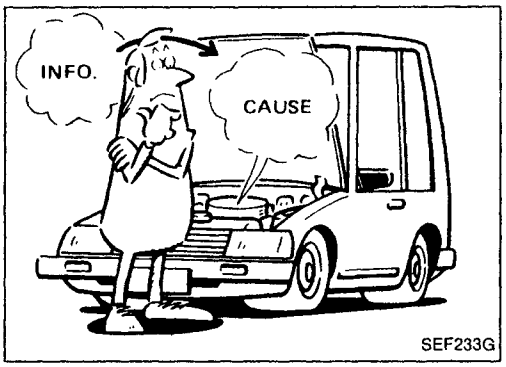

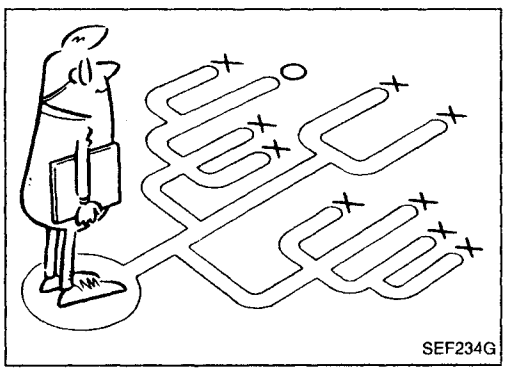

Introduction

The engine has an ECM to control major systems such as fuel control, ignition control, idle air control system, etc. The ECM accepts input signals from sensors and instantly drives actuators. It is essential that both input and output signals are proper and stable. At the same time, it is important that there are no problems such as vacuum leaks, fouled spark plugs, or other problems with the engine.

It is much more difficult to diagnose a problem that occurs intermittently rather than continuously. Most intermittent problems are caused by poor electric connections or improper wiring. In this case, careful checking of suspected circuits may help prevent the replacement of good parts.

A visual check only may not find the cause of the problems. A road test with CONSULT or a circuit tester connected should be performed. Follow the "Work Flow" on the next page.

Before undertaking actual checks, take just a few minutes to talk with a customer who approaches with a driveability complaint. The customer can supply good information about such problems, especially intermittent ones. Find out what symptoms are present and under what conditions they occur. A "Diagnostic Worksheet" like the example on EC-61 should be used.

Start your diagnosis by looking for "conventional" problems first. This will help troubleshoot driveability problems on an electronically controlled engine vehicle.

Simpo PDF Merge and Split Unregistered Version - http://www.simpopdf.com

Work Flow

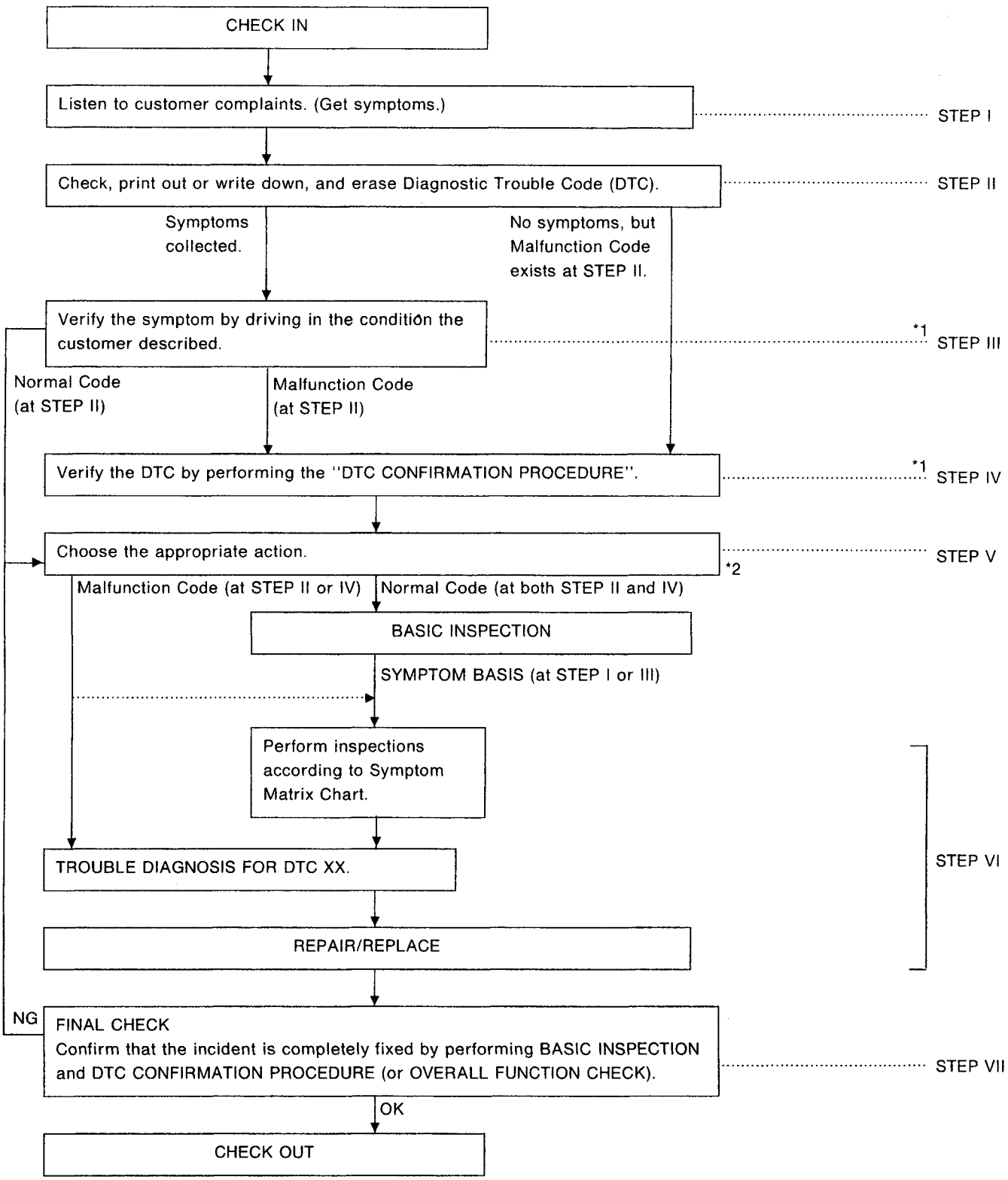

***1: If the incident cannot be duplicated, refer to GI section ("Incident Simulation Tests", "HOW TO PERFORM EFFICIENT DIAGNOSIS FOR AN ELECTRICAL INCIDENT").**

***2: If the on-board diagnostic system cannot be performed, check main power supply and ground circuit. Refer to "TROUBLE DIAGNOSIS FOR POWER SUPPLY", EC-88.**

Simpo PDF Merge and Split Unregistered Version - http://www.simpopdf.com

Description for Work Flow

STEP	DESCRIPTION
STEP I	Get detailed information about the conditions and the environment when the incident/symptom occurred using the "DIAGNOSTIC WORKSHEET" as shown on the next page.
STEP II	Before confirming the concern, check and write down (print out using CONSULT) the Diagnostic Trouble Code (DTC), then erase the code. The DTC can be used when duplicating the incident at STEP III & IV. Study the relationship between the cause, specified by DTC, and the symptom described by the customer. (The "Symptom Matrix Chart" will be useful. Refer to EC-72.)
STEP III	Try to confirm the symptom and under what conditions the incident occurs. The "DIAGNOSTIC WORK SHEET" is useful to verify the incident. Connect CONSULT to the vehicle in DATA MONITOR (AUTO TRIG) mode and check real time diagnosis results. If the incident cannot be verified, perform INCIDENT SIMULATION TESTS. Refer to GI section. If the malfunction code is detected, skip STEP IV and perform STEP V.
STEP IV	Try to detect the Diagnostic Trouble Code (DTC) by driving in (or performing) the "DTC CONFIRMATION PROCEDURE". Check and read the DTC by using CONSULT. During the DTC verification, be sure to connect CONSULT to the vehicle in DATA MONITOR (AUTO TRIG) mode and check real time diagnosis results. If the incident cannot be verified, perform INCIDENT SIMULATION TESTS. Refer to GI section. In case the "DTC CONFIRMATION PROCEDURE" is not available, perform the "OVERALL FUNCTION CHECK" instead. The DTC cannot be displayed by this check, however, this simplified "check" is an effective alternative. The "NG" result of the "OVERALL FUNCTION CHECK" is the same as the DTC detection.
STEP V	Take the appropriate action based on the results of STEP I through IV. If the malfunction code is indicated, proceed to TROUBLE DIAGNOSIS FOR DTC XX. If the normal code is indicated, proceed to the BASIC INSPECTION. Refer to EC-65. Then perform inspections according to the Symptom Matrix Chart. Refer to EC-72.
STEP VI	Identify where to begin diagnosis based on the relationship study between symptom and possible causes. Inspect the system for mechanical binding, loose connectors or wiring damage using (tracing) "Harness Layouts". Gently shake the related connectors, components or wiring harness with CONSULT set in "DATA MONITOR (AUTO TRIG)" mode. Check the voltage of the related ECM terminals or monitor the output data from the related sensors with CONSULT. Refer to EC-74. The "DIAGNOSTIC PROCEDURE" in EC section contains a description based on open circuit inspection. A short circuit inspection is also required for the circuit check in the DIAGNOSTIC PROCEDURE. For details, refer to GI section ("HOW TO PERFORM EFFICIENT DIAGNOSIS FOR AN ELECTRICAL INCIDENT", "Circuit Inspection"). Repair or replace the malfunction parts.
STEP VII	Once you have repaired the circuit or replaced a component, you need to run the engine in the same conditions and circumstances which resulted in the customer's initial complaint. Perform the "DTC CONFIRMATION PROCEDURE" and confirm the normal code (Diagnostic trouble code No. 55) is detected. If the incident is still detected in the final check, perform STEP VI by using a different method from the previous one. Before returning the vehicle to the customer, be sure to erase the unnecessary (already fixed) DTC in ECM. Refer to EC-46.

Simpo PDF Merge and Split Unregistered Version - http://www.simpopdf.com

KEY POINTS

WHAT ..... Vehicle & engine model
WHEN ..... Date, Frequencies
WHERE..... Road conditions
HOW ..... Operating conditions, Weather conditions, Symptoms

SEF907L

Diagnostic Worksheet

There are many operating conditions that lead to the malfunction of engine components. A good grasp of such conditions can make troubleshooting faster and more accurate.
In general, each customer feels differently about a problem. It is important to fully understand the symptoms or conditions for a customer complaint.
Utilize a diagnostic worksheet like the one shown below in order to organize all the information for troubleshooting.

EC

WORKSHEET SAMPLE

Customer name MR/MS		Model & Year	VIN
Engine #		Trans.	Mileage
Incident Date		Manuf. Date	In Service Date
Symptoms	☐ Startability	☐ Impossible to start ☐ No combustion ☐ Partial combustion ☐ Partial combustion affected by throttle position ☐ Partial combustion NOT affected by throttle position ☐ Possible but hard to start ☐ Others [ ]	
	☐ Idling	☐ No fast idle ☐ Unstable ☐ High idle ☐ Low idle ☐ Others [ ]	
	☐ Driveability	☐ Stumble ☐ Surge ☐ Knock ☐ Lack of power ☐ Intake backfire ☐ Exhaust backfire ☐ Others [ ]	
	☐ Engine stall	☐ At the time of start ☐ While idling ☐ While accelerating ☐ While decelerating ☐ Just after stopping ☐ While loading	
Incident occurrence		☐ Just after delivery ☐ Recently ☐ In the morning ☐ At night ☐ In the daytime	
Frequency		☐ All the time ☐ Under certain conditions ☐ Sometimes	
Weather conditions		☐ Not affected	
	Weather	☐ Fine ☐ Raining ☐ Snowing ☐ Others [ ]	
	Temperature	☐ Hot ☐ Warm ☐ Cool ☐ Cold ☐ Humid °F	
Engine conditions		☐ Cold ☐ During warm-up ☐ After warm-up Engine speed 0 2,000 4,000 6,000 8,000 rpm	
Road conditions		☐ In town ☐ In suburbs ☐ Highway ☐ Off road (up/down)	
Driving conditions		☐ Not affected ☐ At starting ☐ While idling ☐ At racing ☐ While accelerating ☐ While cruising ☐ While decelerating ☐ While turning (RH/LH) Vehicle speed 0 10 20 30 40 50 60 MPH	
Malfunction indicator lamp		☐ Turned on ☐ Not turned on	

Simpo PDF Merge and Split Unregistered Version - http://www.simpopdf.com

Diagnostic Trouble Code (DTC) Chart

ENGINE RELATED ITEMS

Diagnostic trouble code No.	Detected items (Screen terms for CONSULT, "SELF-DIAG RESULTS" mode)	Malfunction is detected when ...
11	Camshaft position sensor circuit (CAMSHAFT POSI SEN)	• Either 1° or 180° signal is not detected by the ECM for the first few seconds during engine cranking. • Either 1° or 180° signal is not detected by the ECM often enough while the engine speed is higher than the specified rpm. • The relation between 1° and 180° signals is not in the normal range during the specified rpm.
12	Mass air flow sensor circuit (MASS AIR FLOW SEN)	• An excessively high or low voltage is entered to ECM. • Voltage sent to ECM is not practical when compared with the camshaft position sensor signal and throttle position sensor signal.
13	Engine coolant temperature sensor circuit (COOLANT TEMP SEN)	• An excessively high or low voltage from the sensor is detected by the ECM.
21	Ignition signal circuit (IGN SIGNAL-PRIMARY)	• The ignition signal in the primary circuit is not detected by the ECM during engine cranking or running.
28*1	OVER HEAT	• The engine coolant temperature sensor output voltage is below 0.35V.
34*2	Knock sensor circuit (KNOCK SENSOR)	• An excessively low or high voltage from the sensor is detected by the ECM.
41*3	Intake air temperature sensor circuit (INT AIR TEMP SEN)	• An excessively high or low voltage from the sensor is detected by the ECM. • Voltage sent to ECM is not practical when compared with the engine coolant temperature sensor signal.
55	No failure (NO SELF DIAGNOSTIC FAILURE INDICATED...)	• No malfunction is detected by the ECM.

*1: Except for Australia
*2: Except for Europe and Israel
*3: For Australia
*4: This is Quick Reference of "DTC CONFIRMATION PROCEDURE".
Details are described in each TROUBLE DIAGNOSIS FOR DTC XX.
Abbreviations are as follows:
IGN: ON : Turning the ignition switch ON is required for the ECM to detect a malfunction (if one exists).
RUNNING : Running engine is required for the ECM to detect a malfunction (if one exists).

*5: • The "OVERALL FUNCTION CHECK" is a simplified and effective way to inspect a component or circuit.
In some cases, the "OVERALL FUNCTION CHECK" is used rather than a "DIAGNOSTIC TROUBLE CODE CONFIRMATION PROCEDURE".
When no DTC CONFIRMATION PROCEDURE is available, the "NG" result of the OVERALL FUNCTION CHECK can be considered to mean the same as a DTC detection.
• During an "NG" OVERALL FUNCTION CHECK, the DTC might not be confirmed.

Simpo PDF Merge and Split Unregistered Version - http://www.simpopdf.com

Diagnostic Trouble Code (DTC) Chart (Cont'd)

X: Applicable
—: Not applicable

Check Items (Possible Cause)	"DTC CONFIRMATION PROCEDURE" Quick Ref. *4	"OVERALL FUNCTION CHECK" Quick Ref. *5	Fail Safe System	Reference Page
• Harness or connectors (The sensor circuit is open or shorted.) • Camshaft position sensor • Starter motor • Starting system circuit (EL section) • Dead (Weak) battery	RUNNING	—	—	EC-94
• Harness or connectors (The sensor circuit is open or shorted.) • Mass air flow sensor	RUNNING	RUNNING	X	EC-101
• Harness or connectors (The sensor circuit is open or shorted.) • Engine coolant temperature sensor	IGN: ON	—	X	EC-108
• Harness or connectors (The ignition primary circuit is open or shorted.) • Power transistor unit • Camshaft position sensor • Camshaft position sensor circuit	RUNNING	—	—	EC-113
• Harness or connector • Engine coolant temperature sensor	—	IGN: ON (after warming up)	—	EC-108
• Harness or connectors (The sensor circuit is open or shorted.) • Knock sensor	RUNNING	—	—	EC-119
• Harness or connectors (The sensor circuit is open or shorted.) • Intake air temperature sensor	IGN: ON	—	—	EC-124
• No failure	—	—	—	—

EC

Simpo PDF Merge and Split Unregistered Version - http://www.simpopdf.com

Fail-Safe Chart

The ECM enters fail-safe mode, if any of the following DTCs is recorded due to the open or short circuit.

<table>
<tr><th>DTC No.</th><th>Detected items</th><th>Engine operating condition in fail-safe mode</th></tr>
<tr><td>12</td><td>Mass air flow sensor circuit</td><td>Engine speed will not rise more than 3,000 rpm*1 due to the fuel cut.</td></tr>
<tr><td>13</td><td>Engine coolant temperature sensor circuit</td><td>Engine coolant temperature will be determined based on the time after turning ignition switch "ON" or "START".
Except for Europe and Israel
<table>
<tr><th>Condition</th><th>Engine coolant temperature decided</th></tr>
<tr><td>Just as ignition switch is turned ON or Start</td><td>30°C (86°F)</td></tr>
<tr><td>More than 5 minutes after ignition ON or Start</td><td>80°C (176°F)</td></tr>
<tr><td>Except as shown above</td><td>30 - 80°C (86 - 176°F)
(Depends on the time)</td></tr>
</table>
For Europe and Israel
<table>
<tr><th>Condition</th><th>Engine coolant temperature decided</th></tr>
<tr><td>Just as ignition switch is turned ON or Start</td><td>35°C (95°F)</td></tr>
<tr><td>More than 4.5 minutes after ignition ON or Start</td><td>80°C (176°F)</td></tr>
<tr><td>Except as shown above</td><td>35 - 80°C (95 - 176°F)
(Depends on the time)</td></tr>
</table>
When the fail-safe system for engine coolant temperature sensor is activated, the cooling fan operates while engine is running.</td></tr>
<tr><td>43</td><td>Throttle position sensor circuit</td><td>Throttle position will be determined based on the injected fuel amount and the engine speed.
Therefore, acceleration will be poor.
<table>
<tr><th>Condition</th><th>Driving condition</th></tr>
<tr><td>When engine is idling</td><td>Normal</td></tr>
<tr><td>When accelerating</td><td>Poor acceleration</td></tr>
</table></td></tr>
<tr><td>—</td><td>ECM</td><td>Fail-safe system activating condition when ECM is malfunctioning
The computing function of the ECM was judged to be malfunctioning.
When the fail-safe system activates (i.e., if the ECM detects a malfunction condition in the CPU of ECM), the MALFUNCTION INDICATOR LAMP on the instrument panel lights to warn the driver.
Engine control, with fail-safe system, operates when ECM is malfunctioning
When the fail-safe system is operating, fuel injection, ignition timing, fuel pump operation, IACV-AAC valve operation and cooling fan operation are controlled under certain limitations.
<table>
<tr><th></th><th>Operation</th></tr>
<tr><td>Engine speed</td><td>Engine speed will not rise more than 3,000 rpm</td></tr>
<tr><td>Fuel injection</td><td>Simultaneous multiport fuel injection system</td></tr>
<tr><td>Ignition timing</td><td>Ignition timing is fixed at the preset valve</td></tr>
<tr><td>Fuel pump</td><td>Fuel pump relay is "ON" when engine is running and "OFF" when engine stalls</td></tr>
<tr><td>IACV-AAC valve</td><td>Full open</td></tr>
<tr><td>Cooling fans</td><td>Cooling fan relay "ON" when engine is running, and "OFF" when engine stalls</td></tr>
</table></td></tr>
</table>

Simpo PDF Merge and Split Unregistered Version - http://www.simpopdf.com

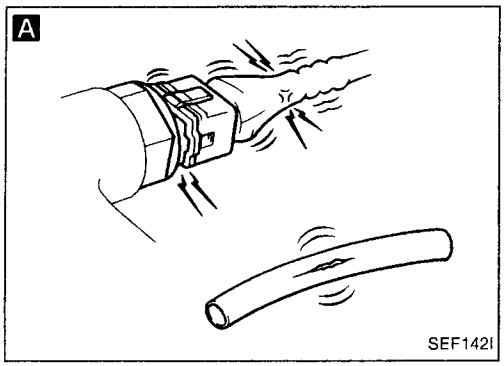

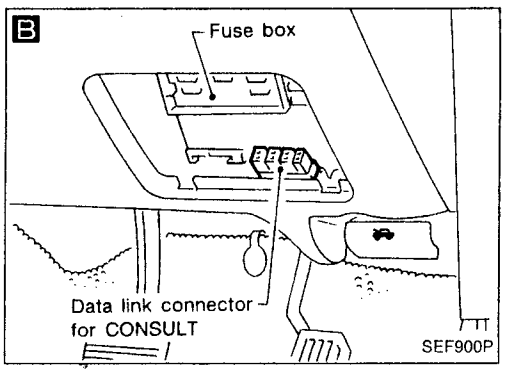

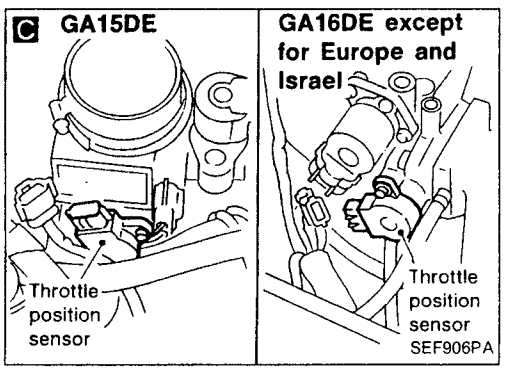

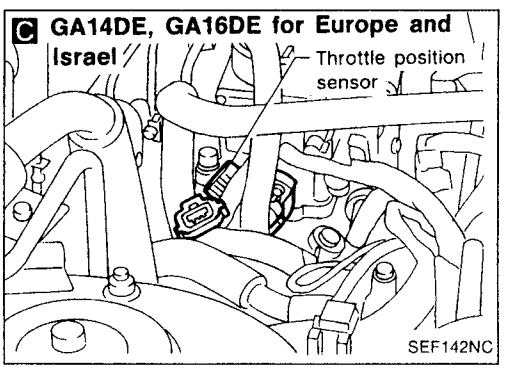

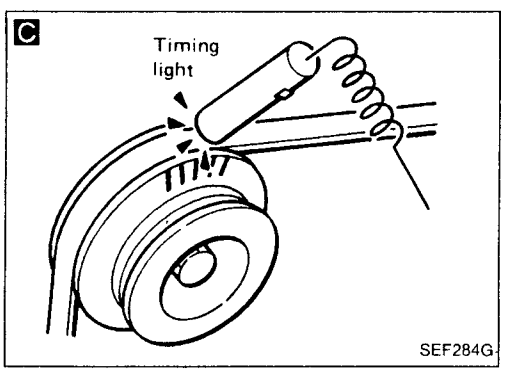

Basic Inspection

Precaution:

Perform Basic Inspection without electrical or mechanical loads applied;

- **Headlamp switch is OFF,**
- **Air conditioner switch is OFF,**
- **Rear defogger switch is OFF,**
- **Steering wheel is in the straight-ahead position, etc.**

A

BEFORE STARTING

1. Check service records for any recent repairs that may indicate a related problem, or the current need for scheduled maintenance.
2. Open engine hood and check the following:
   - Harness connectors for improper connections
   - Vacuum hoses for splits, kinks, or improper connections
   - Wiring for improper connections, pinches, or cuts

B

CONNECT CONSULT TO THE VEHICLE.

Connect "CONSULT" to the data link connector for CONSULT and select "ENGINE" from the menu. Refer to EC-36.

DOES ENGINE START? — No → Go to E.

Yes

C

CHECK IGNITION TIMING.

1. Warm up engine sufficiently.
2. Stop engine and disconnect throttle position sensor harness connector.
3. Start engine.
4. Check ignition timing at idle using timing light.

   Ignition timing:

   Refer to EC-36.

NG → Adjust ignition timing by turning distributor.

OK

(Go to Ⓐ on next page.)

EC

Simpo PDF Merge and Split Unregistered Version - http://www.simpopdf.com

Basic Inspection (Cont'd)

D GA15DE

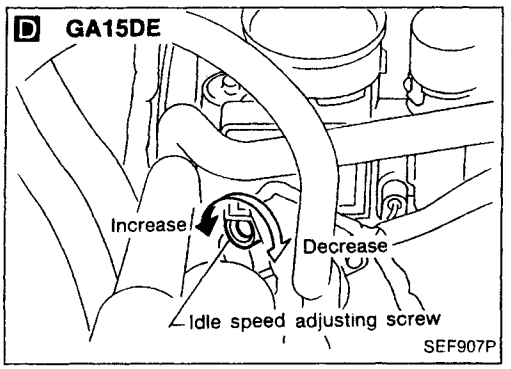

D GA16DE except for Europe and Israel

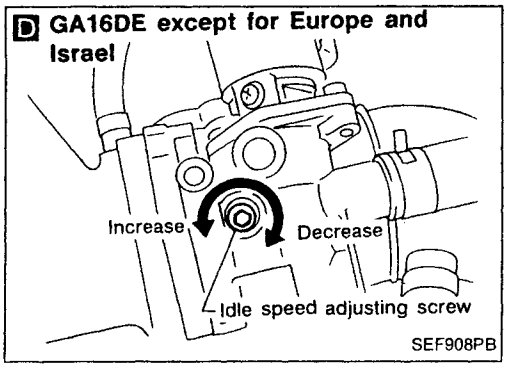

D GA14DE, GA16DE for Europe and Israel

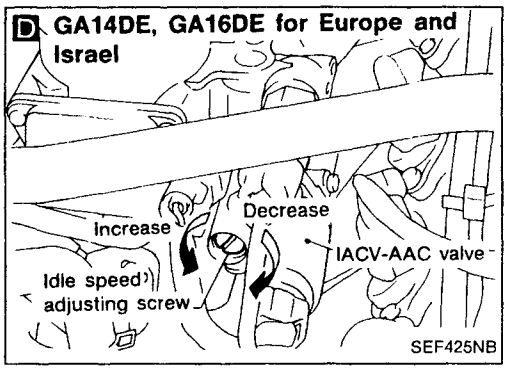

E

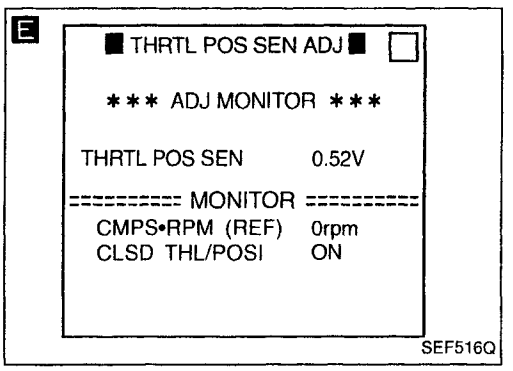

E

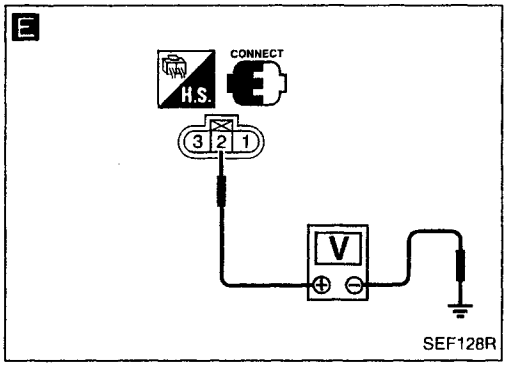

Ⓐ

D

CHECK IDLE ADJ. SCREW INITIAL SET RPM.
Base idle speed: Refer to EC-36.

NG → Adjust engine speed by turning idle adjusting screw.

OK

E

CHECK THROTTLE POSITION SENSOR IDLE POSITION.

1. Perform "THRTL POS SEN ADJ" in "WORK SUPPORT" mode.
2. Check that output voltage of throttle position sensor is approx. 0.35 to 0.65V (Throttle valve fully closes.) and "CLSD THL/P SW" stays "ON".

OR

Measure output voltage of throttle position sensor using voltmeter, and check that it is approx. 0.35 to 0.65V. (Throttle valve fully closed.)

NG → Adjust output voltage to 0.50 ± 0.1V by rotating throttle position sensor body.

OK

RESET IDLE POSITION MEMORY.

1. Warm up engine sufficiently.
2. Turn ignition switch "OFF" and wait at least 5 seconds.
3. Disconnect throttle position sensor harness connector.
4. Start engine and wait at least 5 seconds in "N" position.
5. Reconnect throttle position sensor harness connector while running engine.

Ⓑ

(Go to next page)

Simpo PDF Merge and Split Unregistered Version - http://www.simpopdf.com

Basic Inspection (Cont'd)

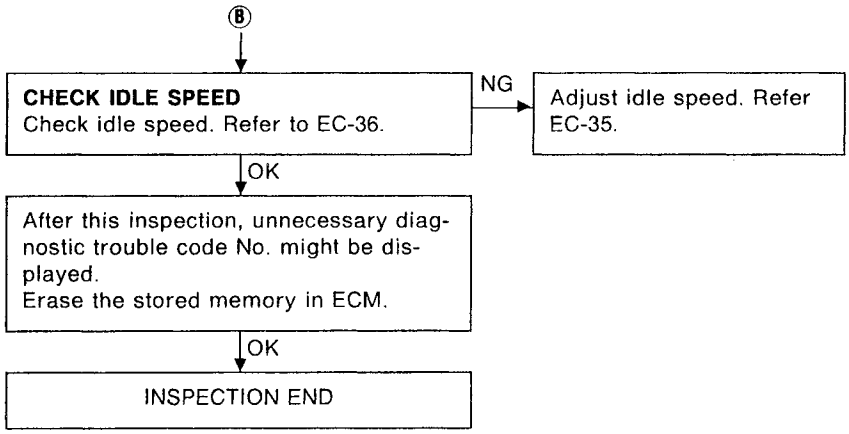

Simpo PDF Merge and Split Unregistered Version - http://www.simpopdf.com

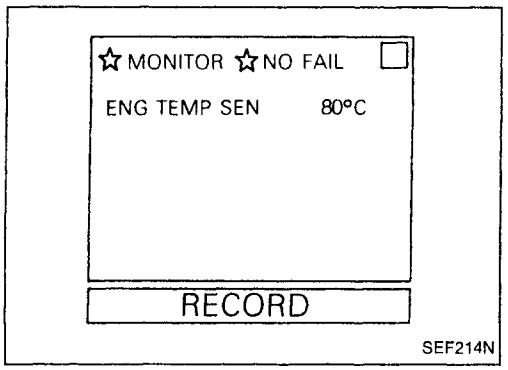

Fast Idle Cam (FIC) Inspection and Adjustment — For Europe and Israel

1. Start engine and warm it up.
2. See "ENG TEMP SEN" or "COOLAN TEMP/S" in "DATA MONITOR" mode with CONSULT.
3. When engine coolant temperature is 80±5°C (176±9°F), make sure that mark Ⓐ is aligned with mark Ⓒ as shown in the figure.

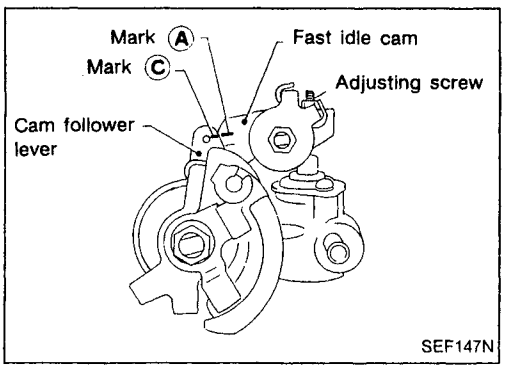

2. Disconnect engine coolant temperature sensor harness connector and check resistance as shown in the figure.
3. When the resistance of engine coolant temperature sensor is 0.26 to 0.39 kΩ, make sure that mark Ⓐ is aligned with mark Ⓒ as shown in the figure.

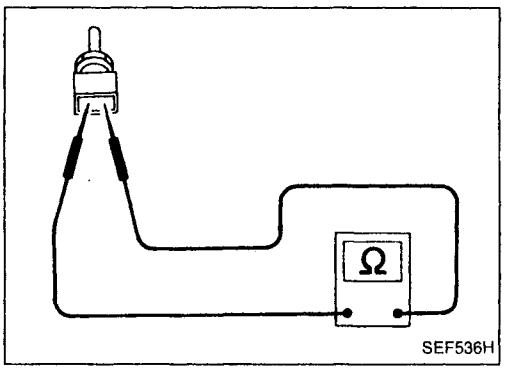

- If NG, adjust by turning adjusting screw.

Adjusting screw tightening torque:
0.98 - 1.96 N·m (10 - 20 kg-cm, 8.7 - 17.4 in-lb)

4. Stop engine.
5. Turn ignition switch "ON" and see "ENG TEMP SEN" or "COOLAN TEMP/S" in "DATA MONITOR" mode with CONSULT.
6. When engine coolant temperature is 25±5°C (77±9°F), make sure that mark Ⓑ is aligned with mark Ⓒ as shown in the figure.

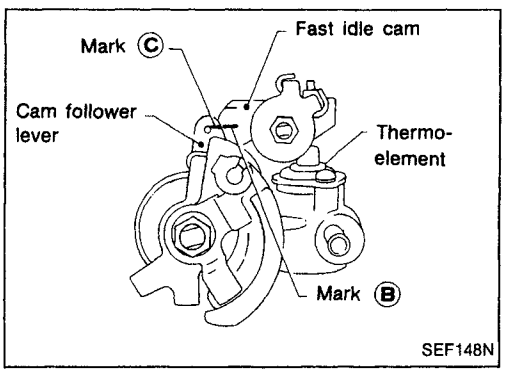

5. When the resistance of engine coolant temperature sensor is 1.65 to 2.40 kΩ, make sure that mark Ⓑ is aligned with mark Ⓒ as shown in the figure.

- If NG, replace thermo-element and perform the above inspection and adjustment again.

Fast Idle Cam (FIC) Inspection and Adjustment — Except for Europe and Israel

1. Remove throttle body from engine.
2. Wait for at least 3 hours.
   (This step is necessary to bring the temperature of the thermo-element to the room temperature

Simpo PDF Merge and Split Unregistered Version - http://www.simpopdf.com

Fast Idle Cam (FIC) Inspection and Adjustment — Except for Europe and Israel (Cont'd)

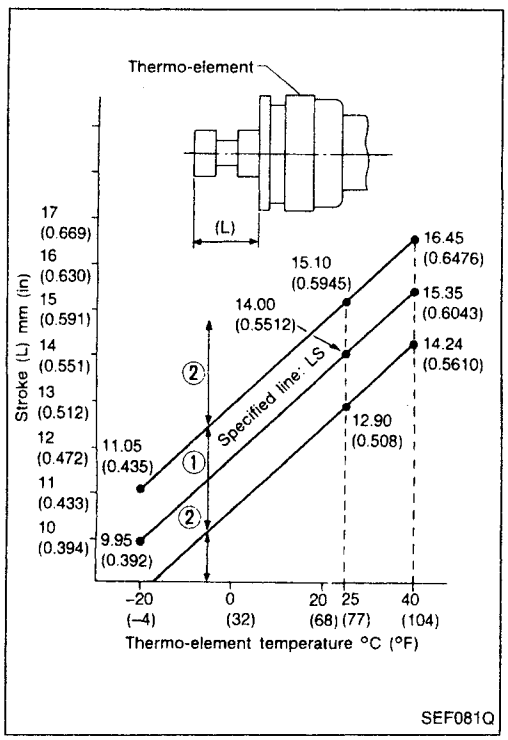

SEF081Q

3. Measure thermo-element stroke (L) and room temperature.
4. Check thermo-element stroke (L) as shown in the figure.

L: Thermo-element stroke	①	②
Go to step	5*	2**

*: Thermo-element is normal. Adjust first idle cam only.
**: Thermo-element is malfunctioning. Replace thermo-element, and perform inspection beginning with step 2.

EC

GA15DE

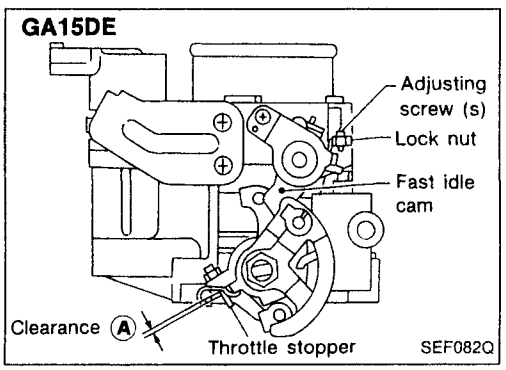

SEF082Q

5. Adjust clearance Ⓐ between throttle stopper and throttle adjusting screw to specification by turning adjusting screw (S).

Engine models		Clearance Ⓐ mm (in)
GA15DE	M/T	0.40 - 0.75 (0.0157 - 0.0295)
	A/T	0.61 - 0.95 (0.0240 - 0.0374)
GA16DE	M/T	0.72 - 1.18 (0.0283 - 0.0465)
	A/T	0.95 - 1.43 (0.0374 - 0.0563)

GA16DE

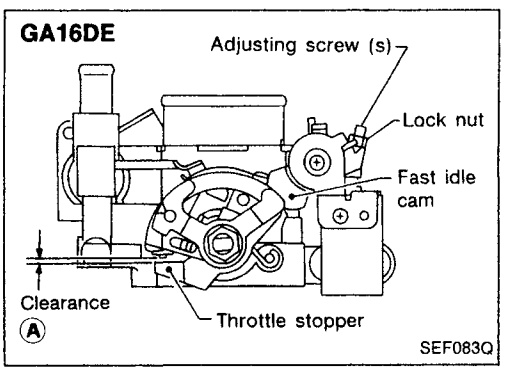

SEF083Q

6. Rotate adjusting screw (S) clockwise or counterclockwise by Z turns according to the following equation, then tighten the adjusting screw lock nut.

$$Z = \frac{L\ (mm) - LS^*\ (mm)}{Y\ (mm)} \quad / \quad Z = \frac{L\ (in) - LS^*\ (IN)}{Y\ (in)}$$

*: Value of the specified line (Ls) at the temperature of thermo-element actually measured.
Y = 0.5 (GA15DE)
0.8 (GA16DE)

- Direction of adjusting screw (S) rotation

(1) Positive (+) Z: Counterclockwise
(2) Negative (−) Z: Clockwise

Simpo PDF Merge and Split Unregistered Version - http://www.simpopdf.com

Fast Idle Cam (FIC) Inspection and Adjustment — Except for Europe and Israel (Cont'd)

For example:

	Case I	Case II
Thermo-element temperature °C (°F)	25 (77)	40 (104)
Thermo-element specified stroke (Ls) mm (in)	14.0 (0.551)	15.35 (0.6043)
Thermo-element stroke (L) mm (in)	14.5 (0.571)	14.60 (0.5748)
Revolutions of adjusting screw (Z) mm/in	$Z = \frac{14.5 - 14.0}{0.80} = 0.63$ / $\frac{0.571 - 0.551}{0.0315} = 0.63$	$Z = \frac{14.60 - 15.35}{0.80} = -0.94$ / $\frac{0.5748 - 0.6043}{0.0315} = -0.94$
Direction of revolution	Counterclockwise	Clockwise

Simpo PDF Merge and Split Unregistered Version - http://www.simpopdf.com

Symptom Matrix Chart

SYSTEM — Basic engine control system		SYMPTOM													Reference page
		HARD/NO START/RESTART (EXCP. HA)	ENGINE STALL	HESITATION/SURGING/FLAT SPOT	SPARK KNOCK/DETONATION	LACK OF POWER/POOR ACCELERATION	HIGH IDLE/LOW IDLE	ROUGH IDLE/HUNTING	IDLING VIBRATION	SLOW/NO RETURN TO IDLE	OVERHEATS/WATER TEMPERATURE HIGH	EXCESSIVE FUEL CONSUMPTION	EXCESSIVE OIL CONSUMPTION	BATTERY DEAD (UNDER CHARGE)	
		AA	AB	AC	AD	AE	AF	AG	AH	AJ	AK	AL	AM	HA	
Fuel	Fuel pump circuit	●	●	●	○	●		●	●			●		○	EC-145
	Fuel pressure regulator system	●	●	●	○	●	○	●	●	○		●			EC-33
	Injector circuit	●	●	●	○	●		●	●			●			EC-141
	Evaporative emission system	○	○	○	○	○	○	○	○	○		○			EC-29
Air	Positive crankcase ventilation system	○	○	●	○	○	○	●	●	○		○			EC-31
	Incorrect idle speed adjustment	○	○				○	○	○	○		○			EC-35
	IACV-AAC valve circuit	●	●	●	○	●	●	●	●	●		●		○	EC-150
	IACV-FICD solenoid valve circuit	○	○	○	○	○	○	○	○	○		○			EC-204
Ignition	Incorrect ignition timing adjustment	○	○	●	●	●		●	●			●			EC-35
	Ignition circuit	●	●	●	●	●		●	●			●			EC-113
EGR	(EGR valve &) EVAP canister purge control solenoid valve circuit		●	●	●	○						●			EC-179, 183
	EGR system	○	●	●	●	○	○	●	●	○		○			EC-179, 183
Main power supply and ground circuit		○	○	○	○	○		○	○		○	○		○	EC-88
Cooling	Cooling fan circuit	○	○	○	○	○	○	○	○	○	○	○		○	EC-156
Air conditioner circuit		○	○	○	○	○	○	○	○	○		○		○	HA section

● ; High Possibility Item
○; Low Possibility Item

(continued on next page)

EC

Simpo PDF Merge and Split Unregistered Version - http://www.simpopdf.com

Symptom Matrix Chart (Cont'd)

SYSTEM — ECCS system		SYMPTOM													Reference page
		HARD/NO START/RESTART (EXCP. HA)	ENGINE STALL	HESITATION/SURGING/FLAT SPOT	SPARK KNOCK/DETONATION	LACK OF POWER/POOR ACCELERATION	HIGH IDLE/LOW IDLE	ROUGH IDLE/HUNTING	IDLING VIBRATION	SLOW/NO RETURN TO IDLE	OVERHEATS/WATER TEMPERATURE HIGH	EXCESSIVE FUEL CONSUMPTION	EXCESSIVE OIL CONSUMPTION	BATTERY DEAD (UNDER CHARGE)	
		AA	AB	AC	AD	AE	AF	AG	AH	AJ	AK	AL	AM	HA	
ECCS	Camshaft position sensor circuit	●	●	●	○	○		○	○			○			EC-94
	Mass air flow sensor circuit	●	●	●	○	●		●	●			●			EC-101
	(Heated) oxygen sensor circuit		●	●	○	●		●	●			●			EC-189, 194
	Engine coolant temperature sensor circuit	●	●	●	○	●	●	●	●	●		●			EC-108
	Throttle position sensor circuit		●	●		●	●	●	●	●		●			EC-128
	Incorrect throttle position sensor adjustment		●	○		○	●	○	○	●		○			EC-65
	Vehicle speed sensor circuit		○	○		○						○			EC-133
	Knock sensor circuit			○	○	○						○			EC-119
	ECM	○	○	○	○	○	○	○	○	○	○	○			EC-64
	Start signal circuit	○													EC-138
	Park/Neutral position switch circuit			○		○		○	○			○			EC-173
	Power steering oil pressure switch circuit		○					○	○						EC-169

● ; High Possibility Item
○; Low Possibility Item

(continued on next page)

Simpo PDF Merge and Split Unregistered Version - http://www.simpopdf.com

Symptom Matrix Chart (Cont'd)

SYSTEM — Engine mechanical & other		SYMPTOM													Reference page
		HARD/NO START/RESTART (EXCP. HA)	ENGINE STALL	HESITATION/SURGING/FLAT SPOT	SPARK KNOCK/DETONATION	LACK OF POWER/POOR ACCELERATION	HIGH IDLE/LOW IDLE	ROUGH IDLE/HUNTING	IDLING VIBRATION	SLOW/NO RETURN TO IDLE	OVERHEATS/WATER TEMPERATURE HIGH	EXCESSIVE FUEL CONSUMPTION	EXCESSIVE OIL CONSUMPTION	BATTERY DEAD (UNDER CHARGE)	
		AA	AB	AC	AD	AE	AF	AG	AH	AJ	AK	AL	AM	HA	
Fuel	Fuel tank	○	○												
	Fuel piping	○	○	○	○	○		○	○			○			
	Vapor lock		○												
	Valve deposit	○	○	○	○	○		○	○			○			
	Poor fuel (Heavy weight gasoline, Low octane)	○	○	○	○	○		○	○			○			—
Air	Air duct		○	○		○		○	○			○			
	Air cleaner		○	○		○		○	○			○			
	Air leakage from air duct (Mass air flow sensor — throttle body)	○	○	○	○	○	○	○	○	○		○			
	Throttle body, Throttle wire	●	●	●		●	●	●	●	●		●			FE section
	Air leakage from intake manifold/ Collector/Gasket	○	●	○	○	○	○	○	○	○		○			—
Cranking	Battery	○	○	○		○		○	○			○		○	
	Alternator circuit	○	○	○		○		○	○			○		○	EL section
	Starter circuit	●													
	Flywheel	●													—
	Clutch interlock switch	○													CL section
	Inhibitor switch	○													AT section
Engine	Cylinder head	●	●	●	●	●		●	●			○			
	Cylinder head gasket	●	●	○	○	●		○	○		○	○	○		
	Cylinder block	●	○	○	○	○		○	○			○	○		
	Piston	●	●	○	●	○		○	○			○	○		
	Piston ring	●	○	○	○	○		○	○			○	○		
	Connecting rod	○	○	○	○	○		○	○			○			
	Bearing	○	○	○	○	○		○	○			○			
	Crankshaft	○	○	○	○	○		○	○			○			
Valve mechanism	Timing chain	●	●	●	○	●		○	○			○			
	Camshaft	●	●	●	○	○		●	●			○			
	Intake valve	●	○	○	●	○		○	○			○	○		
	Exhaust valve	●	○	○	○	○		○	○			○	○		
	Hydraulic lash adjuster		○	○	○	○		○	○			○			—
Exhaust	Exhaust manifold/Tube/Muffler/Gasket	○	○	○	○	○		○	○			○			
	Three way catalyst	●	●	○	○	○		○	○			○			
Lubrication	Oil pan/Oil strainer/Oil pump/Oil filter/ Oil gallery	●	○	○	○	○		●	●			○	○		
	Oil level (Low)/Filthy oil	○	○	○	○	○		○	○			○	○		
Cooling	Radiator/Hose/Radiator filler cap	○	○	○	○	○		○	○		○	○			
	Thermostat	○	○	○	○	○	○	○	○	○	○	○			
	Water pump	○	○	○	○	○		○	○		○	○			
	Water gallery	○	○	○	○	○		○	○		○	○			
	Cooling fan	○	○	○	○	○	○	○	○	○	○	○			
	Coolant level (low)/Contaminated coolant	○	○	○	○	○		○	○		○	○			

● ; High Possibility Item
○; Low Possibility Item

EC

Simpo PDF Merge and Split Unregistered Version - http://www.simpopdf.com

CONSULT Reference Value in Data Monitor Mode

Remarks:

- Specification data are reference values.
- Specification data are output/input values which are detected or supplied by the ECM at the connector.
  * Specification data may not be directly related to their components signals/values/operations.
  (i.e., Adjust ignition timing with a timing light before monitoring IGN TIMING. Specification data might be displayed even when ignition timing is not adjusted to specification. This IGN TIMING monitors the data calculated by the ECM according to the input signals from the camshaft position sensor and other ignition timing related sensors.)
- If the real-time diagnosis results are NG, and the on-board diagnostic system results are OK, when diagnosing the mass air flow sensor, first check to see if the fuel pump control circuit is normal.

MONITOR ITEM	CONDITION		SPECIFICATION
CMPS·RPM (REF)	• Tachometer: Connect • Run engine and compare tachometer indication with the CONSULT value.		Almost the same speed as the CONSULT value.
MAS AIR/FL SE	• Engine: After warming up • Air conditioner switch: OFF • Shift lever: "N" • No-load	Idle	1.0 - 1.7V
		2,000 rpm	1.5 - 2.1V
COOLAN TEMP/S	• Engine: After warming up		More than 70°C (158°F)
O2 SEN	• Engine: After warming up	Maintaining engine speed at 2,000 rpm	0 - 0.3V ↔ 0.6 - 1.0V
M/R F/C MNT			LEAN ↔ RICH Changes more than 5 times during 10 seconds.
VHCL SPEED SE	• Turn drive wheels and compare speedometer indication with the CONSULT value		Almost the same speed as the CONSULT value
BATTERY VOLT	• Ignition switch: ON (Engine stopped)		11 - 14V
THRTL POS SEN	• Ignition switch: ON (Engine stopped)	Throttle valve fully closed	0.35 - 0.65V
		Throttle valve fully opened	Approx. 4.0V
START SIGNAL	• Ignition switch: ON → START → ON		OFF → ON → OFF
CLSD THL/POS	• Ignition switch: ON (Engine stopped)	Throttle valve: Idle position	ON
		Throttle valve: Slightly open	OFF
AIR COND SIG	• Engine: After warming up, idle the engine	A/C switch "OFF"	OFF
		A/C switch "ON" (Compressor operates)	ON
P/N POSI SW	• Ignition switch: ON	Shift lever "P" or "N"	ON
		Except above	OFF

Simpo PDF Merge and Split Unregistered Version - http://www.simpopdf.com

CONSULT Reference Value in Data Monitor Mode (Cont'd)

MONITOR ITEM	CONDITION		SPECIFICATION
PW/ST SIGNAL	• Engine: After warming up, idle the engine	Steering wheel in neutral position (forward direction)	OFF
		The steering wheel is turned	ON
IGNITION SW	• Ignition switch: ON → OFF		ON → OFF
LOAD SIGNAL	• Ignition switch: ON	Rear window defogger is operating and/or lighting switch is on	ON
		Rear window defogger is not operating and lighting switch is not on	OFF
INJ PULSE	• Engine: After warming up • Air conditioner switch: OFF • Shift lever: "N" • No-load	Idle	2.4 - 3.2 msec.
		2,000 rpm	1.9 - 3.2 msec.
IGN TIMING	ditto	Idle	6 -10° BTDC
		2,000 rpm	More than 25° BTDC
IACV-AAC/V	ditto	Idle	20 - 40%
		2,000 rpm	—
A/F ALPHA	• Engine: After warming up	Maintaining engine speed at 2,000 rpm	75 - 125%
AIR COND RLY	• Air conditioner switch: OFF → ON		OFF → ON
FUEL PUMP RLY	• Ignition switch is turned to ON (Operates for 5 seconds) • Engine running and cranking • When engine is stopped (stops in 1.0 seconds)		ON
	• Except as shown above		OFF
COOLING FAN	• When cooling fan is stopped		OFF
	• When cooling fan operates at low speed		LOW
	• When cooling fan operates at high speed		HI
VALVE TIM SOL*1	• Engine: After warming up	Idle	OFF
		Racing engine quickly from idle to 4,000 rpm	ON
EGRC SOL/V (EVAP canister purge control solenoid valve or EGR valve & EVAP canister purge control solenoid valve)	• Engine: After warming up • Air conditioner switch: OFF • Shift lever: N • No-load	Idle	ON
		Racing engine from idle to 3,000 rpm in 1st position	OFF

*1: GA16DE except for Europe and Israel

EC

Simpo PDF Merge and Split Unregistered Version - http://www.simpopdf.com

Major Sensor Reference Graph in Data Monitor Mode

The following are the major sensor reference graphs in "DATA MONITOR" mode.
(Select "HI SPEED" in "DATA MONITOR" with CONSULT.)

THRTL POS SEN, CLSD THL/POSI

Below is the data for "THRTL POS SEN" and "CLSD THL/POSI" when depressing the accelerator pedal with the ignition switch "ON".
The signal of "THRTL POS SEN" should rise gradually without any intermittent drop or rise after "CLSD THL/POSI" is changed from "ON" to "OFF".

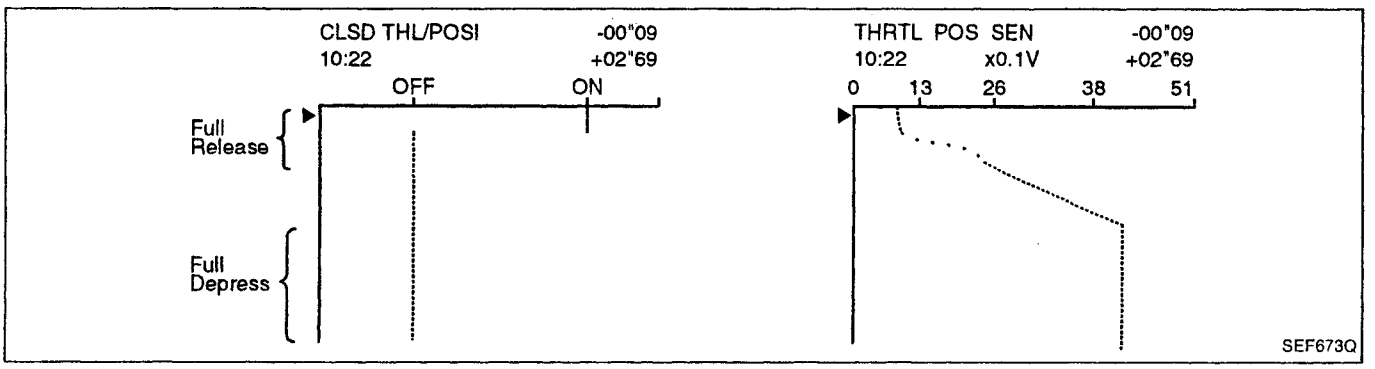

CMPS·RPM (REF), MAS AIR/FL SE, THRTL POS SEN, O2 SENSOR, INJ PULSE

Below is the data for "CMPS·RPM (REF)", "MAS AIR/FL SE", "THRTL POS SEN", "O2 SENSOR" and "INJ PULSE" when revving quickly up to 4,800 rpm under no load after warming up engine sufficiently.
Each value is for reference, the exact value may vary.

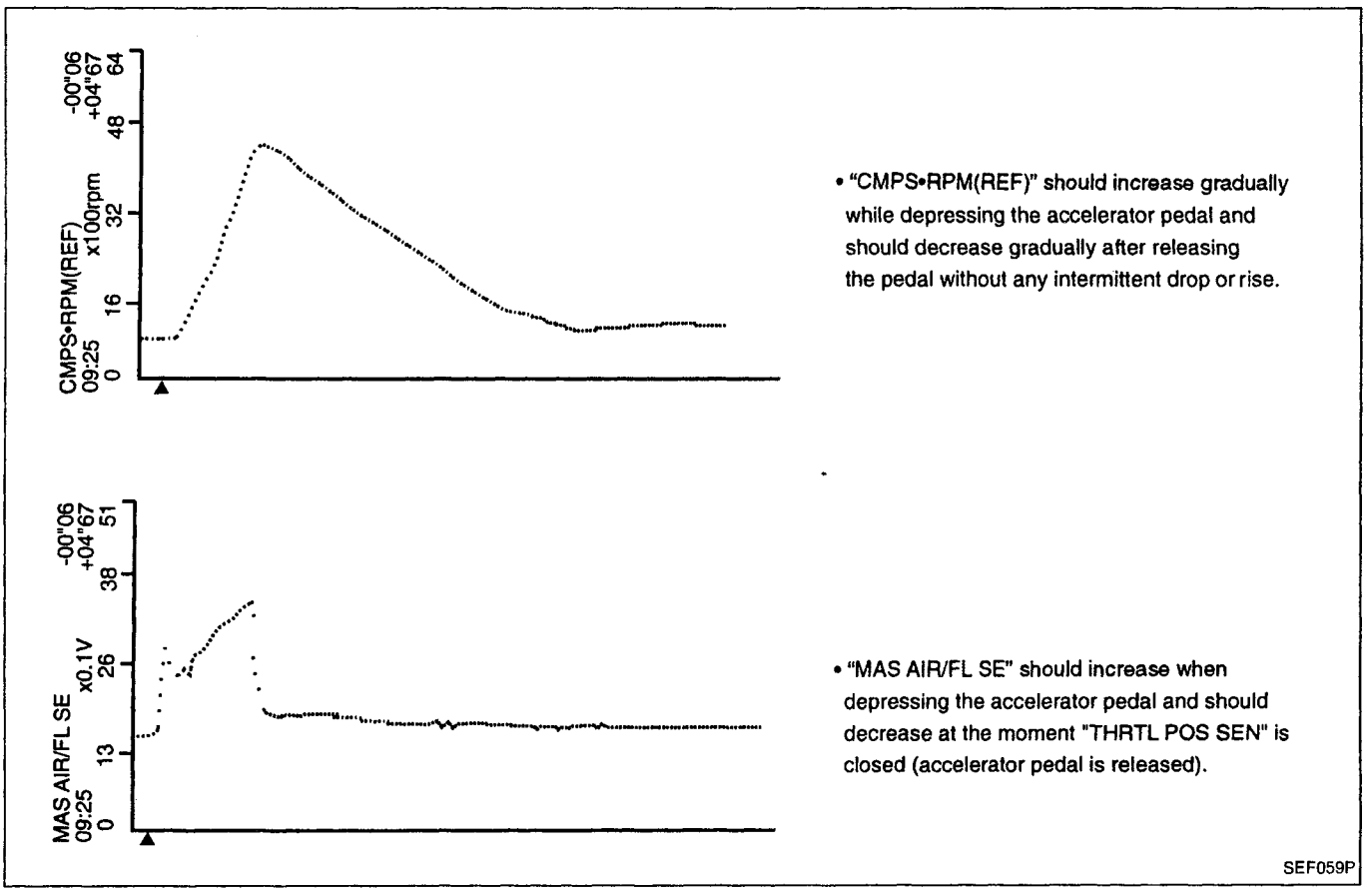

Simpo PDF Merge and Split Unregistered Version - http://www.simpopdf.com

Major Sensor Reference Graph in Data Monitor Mode (Cont'd)

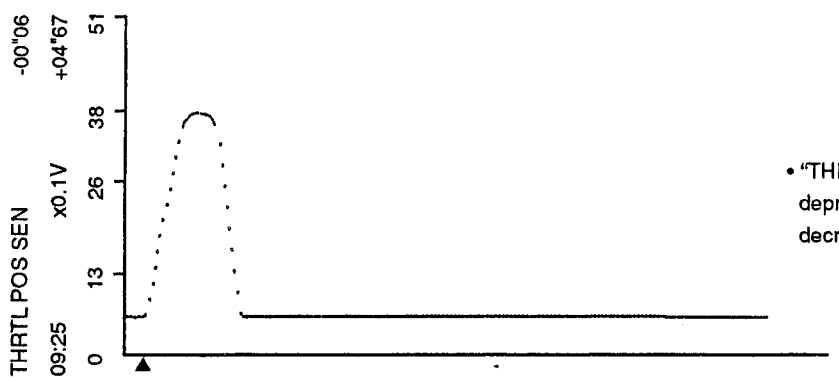

• "THRTL POS SEN" should increase while depressing the accelerator pedel and should decrease while releasing it.

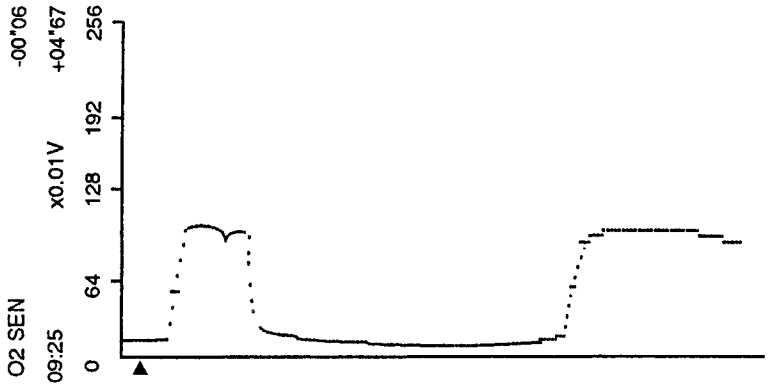

• "O2 SEN" may increase immediately after depressing the accelerator pedel and may decrease after releasing the pedal.

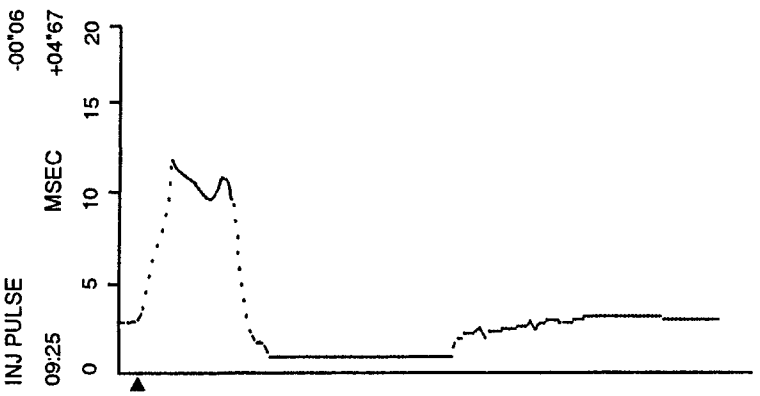

• "INJ PULSE" should increase when depressing the accelerator pedal and should decrease when the pedal is released.

SEF259QA

EC

Simpo PDF Merge and Split Unregistered Version - http://www.simpopdf.com

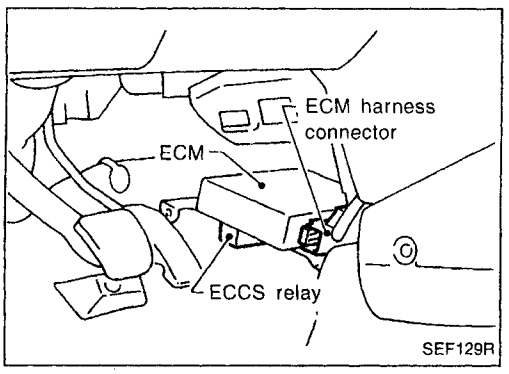

ECM Terminals and Reference Value

PREPARATION

1. ECM is located behind the center console panel. For this inspection, remove the center console under cover.

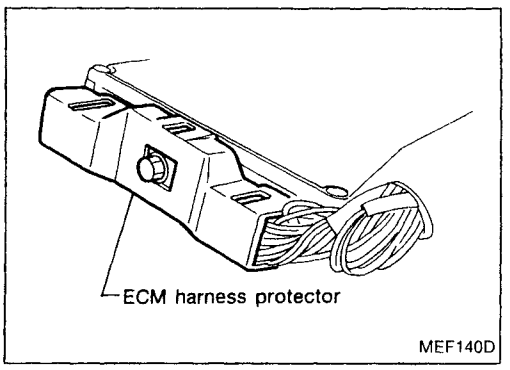

2. Remove ECM harness protector.

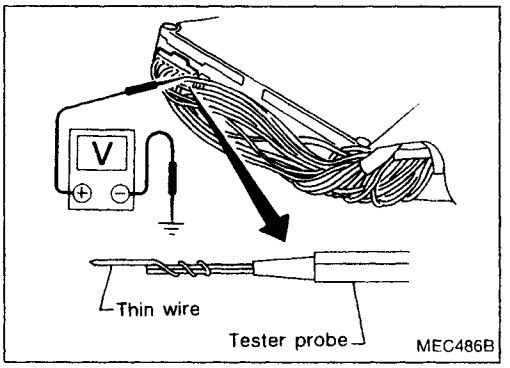

3. Perform all voltage measurements with the connectors connected. Extend tester probe as shown to perform tests easily.

ECM HARNESS CONNECTOR TERMINAL LAYOUT

For Australia

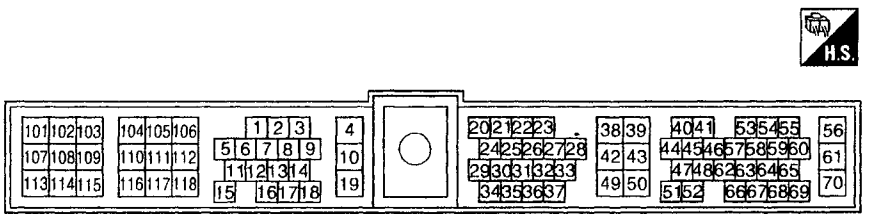

SEF130R

Except for Australia

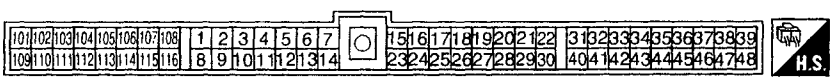

SEF131R

Simpo PDF Merge and Split Unregistered Version - http://www.simpopdf.com

ECM Terminals and Reference Value (Cont'd)

ECM INSPECTION TABLE — GA16DE for Australia

Specification data are reference values and are measured between each terminal and ㊸ (ECCS ground).

TER-MINAL NO.	WIRE COLOR	ITEM	CONDITION	DATA
1	W/B	Ignition signal	Engine is running. └ Idle speed	0.3 - 0.6V
			Engine is running. └ Engine speed is 2,000 rpm.	Approximately 0.9V
2	GY/R	Ignition check	Engine is running. └ Idle speed	Approximately 12V
3	L/B	Tachometer	Engine is running. └ Idle speed	Approximately 0.9V
4	W/G	ECCS relay (Self-shut-off)	Engine is running. Ignition switch "OFF" └ For a few seconds after turning ignition switch "OFF"	0 - 1V
			Ignition switch "OFF" └ A few seconds passed after turning ignition switch "OFF"	BATTERY VOLTAGE (11 - 14V)
8	B/P	Fuel pump relay	Ignition switch "ON" └ For 5 seconds after turning ignition switch "ON" Engine is running.	0.07 - 0.20V
			Ignition switch "ON" └ More than 5 seconds after turning ignition switch "ON"	BATTERY VOLTAGE (11 - 14V)
10	B/W	ECCS ground	Engine is running. └ Idle speed	Engine ground
13	LG	Cooling fan relay (High speed: For A/T models)	Engine is running. ├ Cooling fan is not operating. └ Cooling fan is operating at low speed.	BATTERY VOLTAGE (11 - 14V)
			Engine is running. └ Cooling fan is operating at high speed.	Approximately 0V
14	LG/R	Cooling fan relay (Low speed)	Engine is running. └ Cooling fan is not operating.	BATTERY VOLTAGE (11 - 14V)
			Engine is running. └ Cooling fan is operating.	0.07 - 0.30V
15	Y	Air conditioner relay	Engine is running. └ Both A/C switch and blower switch are "ON".	0.08 - 0.2V
			Engine is running. └ A/C switch is "OFF".	BATTERY VOLTAGE (11 - 14V)

EC

Simpo PDF Merge and Split Unregistered Version - http://www.simpopdf.com

ECM Terminals and Reference Value (Cont'd)

TER-MINAL NO.	WIRE COLOR	ITEM	CONDITION	DATA
18	OR/L	Malfunction indicator lamp	Ignition switch "ON"	Approximately 50mV
			Engine is running. └ Idle speed	BATTERY VOLTAGE (11 - 14V)
19	B/W	ECCS ground	Engine is running. └ Idle speed	Engine ground
20	B/Y	Start signal	Ignition switch "ON"	Approximately 0V
			Ignition switch "START"	BATTERY VOLTAGE (11 - 14V)
21	G	Air conditioner switch	Engine is running. └ Both air conditioner switch and blower switch are "ON" (Compressor operates)	Approximately 0V
			Engine is running. └ Air conditioner switch is "OFF"	BATTERY VOLTAGE (11 - 14V)
22	G/OR	Neutral position switch (M/T models) Inhibitor switch (A/T models)	Ignition switch "ON" ├ Gear position is "Neutral position" (M/T models) └ Gear position is "N" or "P" (A/T models)	Approximately 0V
			Ignition switch "ON" └ Except the above gear position	A/T models: BATTERY VOLTAGE (11 - 14V) M/T models: Approximately 5V
23	Y	Throttle position sensor	Ignition switch "ON" └ Accelerator pedal released	0.35 - 0.65V
			Ignition switch "ON" └ Accelerator pedal fully depressed	Approximately 4V
25	PU/W	Power steering oil pressure switch	Engine is running. └ Steering wheel is being turned	Approximately 0V
			Engine is running. └ Steering wheel is not being turned	Approximately 5V
26	PU/R	Vehicle speed sensor	Engine is running. └ Front of vehicle raised and front wheels are rotating	Approximately 1.8 - 2.4V (AC voltage)
30	P/B	Torque converter clutch solenoid valve (A/T models only)	Engine is running. └ Idle speed	Approximately 0V
			Engine is running. (Warm-up condition) └ Vehicle speed is 64 km/h (40 MPH) or more in "D" position	BATTERY VOLTAGE (11 - 14V)
35	LG/B	Blower fan switch	Ignition switch "ON" └ Blower fan switch is "ON"	Approximately 0V

Simpo PDF Merge and Split Unregistered Version - http://www.simpopdf.com

ECM Terminals and Reference Value (Cont'd)

TER-MINAL NO.	WIRE COLOR	ITEM	CONDITION	DATA
38	B/R	Ignition switch	Ignition switch "OFF"	0V
			Ignition switch "ON"	BATTERY VOLTAGE (11 - 14V)
39	B	ECCS ground	Engine is running. └ Idle speed	Engine ground
40 44	L L	Camshaft position sensor (Reference signal)	Engine is running. └ Idle speed	Approximately 2.7V (AC voltage)
42	PU/W	IACV-AAC valve (Close)	Ignition switch "ON"	Approximately 0V
			Engine is running. (Warm-up condition) └ Engine speed is 2,000 rpm.	BATTERY VOLTAGE (11 - 14V)
43	B	ECCS ground	Engine is running. └ Idle speed	Engine ground (Probe this terminal with ⊖ tester probe when measuring.)
41 45	B/W B/W	Camshaft position sensor (Position signal)	Engine is running. └ Idle speed	Approximately 2.7V (AC voltage)
46	W	Oxygen sensor	Engine is running. └ After warming up sufficiently and engine speed is 2,000 rpm.	0 - Approximately 1.0V (periodically change)
47	OR	Mass air flow sensor	Engine is running. (Warm-up condition) └ Idle speed	1.0 - 1.7V
			Engine is running. (Warm-up condition) └ Engine speed is 2,000 rpm.	1.5 - 2.1V
48	W	Mass air flow sensor ground	Engine is running. (Warm-up condition) └ Idle speed	0.005 - 0.02V
49	P/L	Throttle position sensor power supply	Ignition switch "ON"	Approximately 5V
50	B	Sensors' ground	Engine is running. (Warm-up condition) └ Idle speed	0.001 - 0.02V
51	BR/Y	Engine coolant temperature sensor	Engine is running.	0 - 4.84V Output voltage varies with engine coolant temperature.
54	W	Knock sensor	Engine is running. └ Idle speed	2.0 - 3.0V
55	L/R	Rear defogger relay	Ignition switch "ON" └ Rear defogger is "OFF".	Approximately 0V
			Ignition switch "ON" └ Rear defogger is "ON".	BATTERY VOLTAGE (11 - 14V)
56 61	W/R W/R	Power supply for ECM	Ignition switch "ON"	BATTERY VOLTAGE (11 - 14V)

EC

Simpo PDF Merge and Split Unregistered Version - http://www.simpopdf.com

ECM Terminals and Reference Value (Cont'd)

TERMINAL NO.	WIRE COLOR	ITEM	CONDITION	DATA
60	R/G	Headlamp switch	Lighting switch "ON"	BATTERY VOLTAGE (11 - 14V)
			Lighting switch "OFF"	Approximately 0V
63	R/Y	Intake air temperature sensor	Engine is running.	0 - 5.0V Output voltage varies with intake air temperature.
64	G/R	Data link connector for CONSULT	Engine is running. └ Idle speed (CONSULT is connected and turned on)	Approximately 0V
65	GY/L			Approximately 4 - 9V
68	G/W			Approximately 3.5V
70	W/L	Power supply (Back-up)	Ignition switch "OFF"	BATTERY VOLTAGE (11 - 14V)
101	SB	IACV-AAC valve (Open)	Ignition switch "ON"	BATTERY VOLTAGE (11 - 14V)
			Engine is running. (Warm-up condition) └ Engine speed is 2,000 rpm.	0 - 4V
102	R/B	Injector No. 1	Engine is running	BATTERY VOLTAGE (11 - 14V)
104	G/B	Injector No. 3		
107	Y/B	Injector No. 2		
109	L/B	Injector No. 4		
103	P	EGR valve & EVAP canister purge control solenoid valve	Engine is running. (Warm-up condition) ├ M/T models: Jack up front wheels and drive wheels at 16 km/h (10 mph) └ Engine speed is 2,000 rpm.	BATTERY VOLTAGE (11 - 14V)
			Engine is running. (Warm-up condition) └ Idle speed	Approximately 0V
106	B/Y	ECCS ground	Engine is running. └ Idle speed	Engine ground
112	B/Y	ECCS ground	Engine is running. └ Idle speed	Engine ground
114	Y/R	VTC solenoid valve	Engine is running. └ Idle speed	BATTERY VOLTAGE (11 - 14V)
			Engine is running. └ Engine speed is 2,000 rpm.	Approximately 0V
115	OR	Heated oxygen sensor heater ground (A/T models)	Engine is running. └ Engine speed is above 3,200 rpm.	BATTERY VOLTAGE (11 - 14V)
			Engine is running. └ Engine speed is below 3,200 rpm.	Approximately 0V
118	B/Y	ECCS ground	Engine is running. └ Idle speed	Engine ground

Simpo PDF Merge and Split Unregistered Version - http://www.simpopdf.com

ECM Terminals and Reference Value (Cont'd)

ECM INSPECTION TABLE — Except GA16DE for Australia

Specification data are reference values and are measured between each terminal and ㊴ (ECCS ground).

TERMINAL NO.	WIRE COLOR	ITEM	CONDITION	DATA
1	W/B	Ignition signal	Engine is running. └ Idle speed	0.2 - 0.3V
			Engine is running. └ Engine speed is 2,000 rpm.	Approximately 0.7V
2	L/B	Tachometer (Models with tachometer)	Engine is running. └ Idle speed	0.7 - 0.9V
3	GY/R	Ignition check	Engine is running. └ Idle speed	Approximately 13V
4	W/G	ECCS relay (Self-shut-off)	Engine is running. Ignition switch "OFF" └ For a few seconds after turning ignition switch "OFF"	0 - 1V
			Ignition switch "OFF" └ A few seconds after turning ignition switch "OFF" and thereafter	BATTERY VOLTAGE (11 - 14V)
9	LG/R	Cooling fan relay (Low speed)	Engine is running. └ Cooling fan is not operating.	BATTERY VOLTAGE (11 - 14V)
			Engine is running. └ Cooling fan is operating.	Approximately 0V
10	LG	Cooling fan relay (High speed)	Engine is running. ├ Cooling fan is not operating. └ Cooling fan is operating at low speed.	BATTERY VOLTAGE (11 - 14V)
			Engine is running. └ Cooling fan is operating at high speed.	Approximately 0V
11	Y or G	Air conditioner relay	Engine is running. └ Both A/C switch and blower fan switch are "ON".	Approximately 0V
			Engine is running. └ A/C switch is "OFF".	BATTERY VOLTAGE (11 - 14V)
12	Y/R	VTC solenoid valve (GA16DE engine models except for Europe and Israel)	Engine is running. └ Idle speed	BATTERY VOLTAGE (11 - 14V)
			Engine is running. └ Engine is racing quickly from idle to 4,000 rpm at 1st position.	Approximately 0V

EC

Simpo PDF Merge and Split Unregistered Version - http://www.simpopdf.com

ECM Terminals and Reference Value (Cont'd)

TERMINAL NO.	WIRE COLOR	ITEM	CONDITION	DATA
16	OR or G	Mass air flow sensor	Engine is running. (Warm-up condition) └ Idle speed	1.2 - 1.8V
			Engine is running. (Warm-up condition) └ Engine speed is 2,000 rpm.	1.7 - 2.3V
18	BR/Y or GY	Engine coolant temperature sensor	Engine is running.	0 - 5.0V Output voltage varies with engine coolant temperature.
19	W	Oxygen sensor (Except for Europe and Israel)	Engine is running. └ After warming up sufficiently	0 - Approximately 1.0V
20	Y	Throttle position sensor	Ignition switch "ON" (Warm-up condition) └ Accelerator pedal released	0.40 - 0.60V
			Ignition switch "ON" └ Accelerator pedal fully depressed	Approximately 4V
22 30	L	Camshaft position sensor (Reference signal: Except for Europe)	Engine is running.	For Israel 1.5 - 3.0V
				Except for Israel 0.1 - 0.4V
24	OR/L	Malfunction indicator lamp	Ignition switch "ON"	Approximately 1.5V
			Engine is running.	BATTERY VOLTAGE (11 - 14V)
27	W	Knock sensor (Except for Europe and Israel)	Engine is running. └ Idle speed	Approximately 2.5V
31 40	L	Camshaft position sensor (Reference signal: For Europe)	Engine is running.	1.5 - 3.0V
	B/W	Camshaft position sensor (Position signal: Except for Europe and Israel)		2.0 - 3.0V
32	PU/R	Vehicle speed sensor	Ignition switch "ON" ├ Engine stopped and gear position is "Neutral position". └ While rotating drive wheel by hand	Varies from 0 to 5V
33	R	Electric load switch	Engine is running. ├ Rear window defogger switch is "ON". └ Lighting switch is "ON".	BATTERY VOLTAGE (11 - 14V)
			Engine is running. ├ Rear window defogger switch is "OFF". └ Lighting switch is "ON".	0V

Simpo PDF Merge and Split Unregistered Version - http://www.simpopdf.com

ECM Terminals and Reference Value (Cont'd)

TERMINAL NO.	WIRE COLOR	ITEM	CONDITION	DATA
34	B/Y	Start signal	Ignition switch "ON"	Approximately 0V
			Ignition switch "START"	BATTERY VOLTAGE (11 - 14V)
35	G/OR	Neutral position switch/ Inhibitor switch	Ignition switch "ON" "N" or "P" position (A/T) Neutral position (M/T)	0V
			Ignition switch "ON" Except the above gear position	For Europe and Israel Approximately 5V
				Except for Europe and Israel BATTERY VOLTAGE (11 - 14V)
36	B/R	Ignition switch (Except for Europe)	Ignition switch "OFF"	0V
			Ignition switch "ON"	BATTERY VOLTAGE (11 - 14V)
37	P/L	Throttle position sensor power supply	Ignition switch "ON"	Approximately 5V
38 47	W/R	Power supply for ECM	Ignition switch "ON"	BATTERY VOLTAGE (11 - 14V)
41	G or GY	Air conditioner switch	Engine is running. Both air conditioner switch and blower fan switch are "ON".	Approximately 0V
			Engine is running. Air conditioner switch is "OFF".	BATTERY VOLTAGE (11 - 14V)
43	PU/W	Power steering oil pressure switch	Engine is running. Steering wheel is being turned.	0V
			Engine is running. Steering wheel is not being turned.	Approximately 5V
44	B/R	Ignition switch (For Europe)	Ignition switch "OFF"	0V
			Ignition switch "ON"	BATTERY VOLTAGE (11 - 14V)
44	R/L	Thermo control amp. (Except for Europe and Israel)	Engine is running. Both air conditioner switch and blower fan switch are "ON".	Approximately 0V
			Engine is running. Air conditioner switch is "OFF".	BATTERY VOLTAGE (11 - 14V)
45	LG/B or G/Y	Blower fan switch	Engine is running. Blower fan switch is "ON".	Approximately 0V
			Engine is running. Blower fan switch is "OFF".	Approximately 5V

EC

Simpo PDF Merge and Split Unregistered Version - http://www.simpopdf.com

ECM Terminals and Reference Value (Cont'd)

TERMINAL NO.	WIRE COLOR	ITEM	CONDITION	DATA
46	W/L	Power supply (Back-up)	Ignition switch "OFF"	BATTERY VOLTAGE (11 - 14V)
101	R/B	Injector No. 1	Engine is running.	BATTERY VOLTAGE (11 - 14V)
103	G/B	Injector No. 3		
110	Y/B	Injector No. 2		
112	L/B	Injector No. 4		
102	OR	Heated oxygen sensor heater ground (For Europe and Israel)	Engine is running. └ Engine speed is above 3,200 rpm.	BATTERY VOLTAGE (11 - 14V)
			Engine is running. └ Engine speed is below 3,200 rpm.	Approximately 0V
104	B/P	Fuel pump relay (Except for Europe)	Ignition switch "ON" └ For 5 seconds after turning ignition switch "ON" Engine is running.	Approximately 0V
			Ignition switch "ON" └ 5 seconds after turning ignition switch "ON" and thereafter	BATTERY VOLTAGE (11 - 14V)
105	P	EVAP canister purge control solenoid valve (GA16DE M/T models except for Europe & Israel) EGR valve & EVAP canister purge control solenoid valve (For Europe and Israel, and GA15DE M/T models)	Engine is running. (Warm-up condition) └ Idle speed	Approximately 0V
			Engine is running. (Warm-up condition) └ Engine is racing from idle to 3,000 rpm in 1st position.	BATTERY VOLTAGE (11 - 14V)
106	B/P	Fuel pump relay (For Europe)	Ignition switch "ON" └ For 5 seconds after turning ignition switch "ON" Engine is running.	0.7 - 0.9V
			Ignition switch "ON" └ 5 seconds after turning ignition switch "ON" and thereafter	BATTERY VOLTAGE (11 - 14V)
111	SB	IACV-AAC valve (Opening signal: Except for Europe and Israel)	Engine is running. └ Idle speed	10 - 13V
			Engine is running. ├ Steering wheel is being turned. ├ Air conditioner is operating. ├ Rear window defogger switch is "ON". └ Lighting switch is "ON".	Approximately 5.0V

Simpo PDF Merge and Split Unregistered Version - http://www.simpopdf.com

ECM Terminals and Reference Value (Cont'd)

TERMINAL NO.	WIRE COLOR	ITEM	CONDITION	DATA
113	PU/W	IACV-AAC valve (Closing signal: Except for Europe and Israel)	Engine is running. └ Idle speed	7 - 13V
			Engine is running. — Steering wheel is being turned. — Air conditioner is operating. — Rear window defogger switch is "ON". └ Lighting switch is "ON".	11 - 14V
	SB	IACV-AAC valve (For Europe and Israel)	Engine is running. └ Idle speed	11 - 14V
			Engine is running. — Steering wheel is being turned. — Air conditioner is operating. — Rear window defogger switch is "ON". └ Lighting switch is "ON".	1 - 10V
115	P/B	Torque converter clutch solenoid valve (A/T models except for Europe and Israel)	Engine is running. └ Idle speed	Approximately 0V
			Engine is running. (Warm-up condition) └ Vehicle speed is 60 km/h (37 MPH) or more in "D" position.	BATTERY VOLTAGE (11 - 14V)

EC

Simpo PDF Merge and Split Unregistered Version - http://www.simpopdf.com

Main Power Supply and Ground Circuit

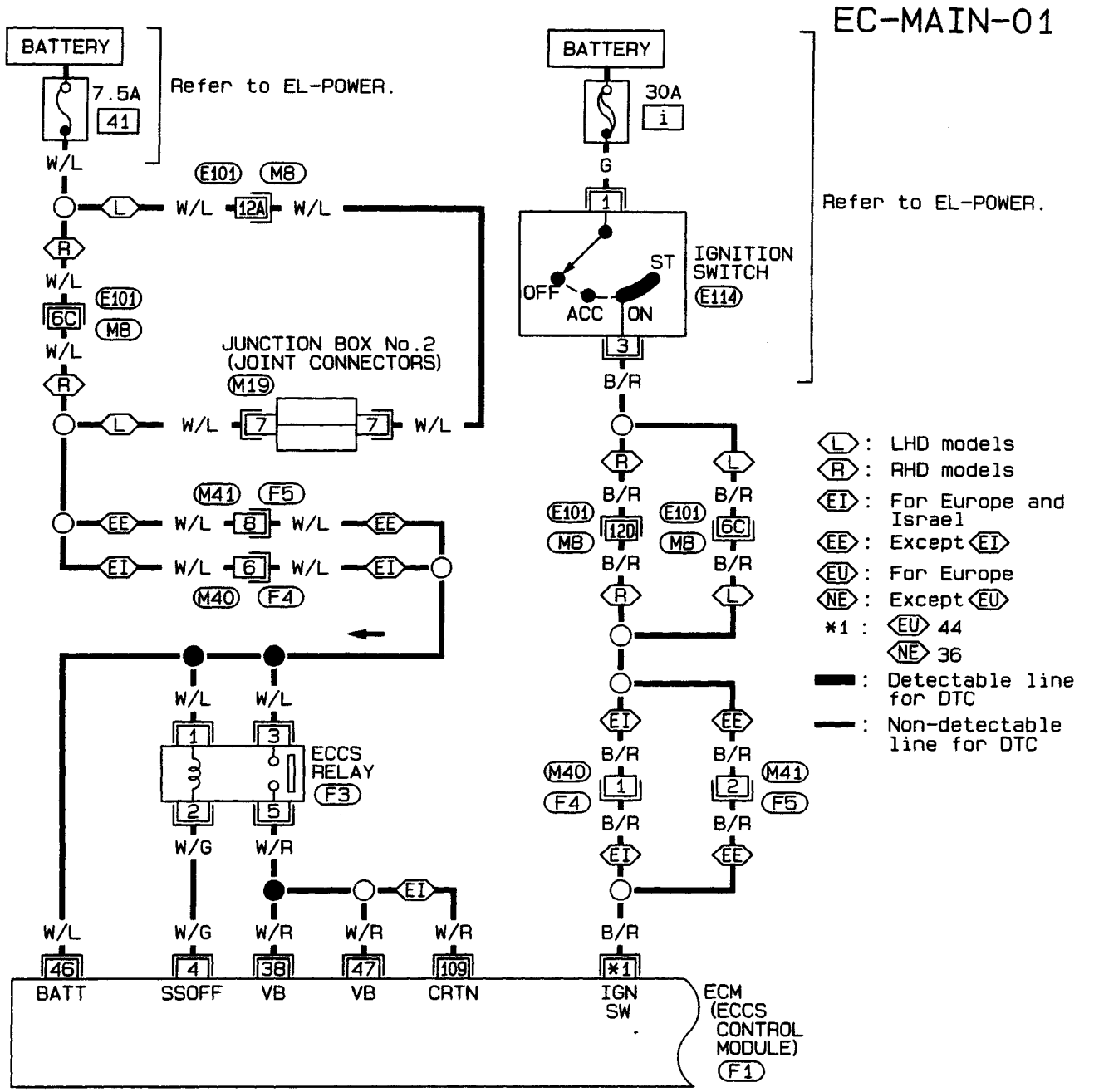

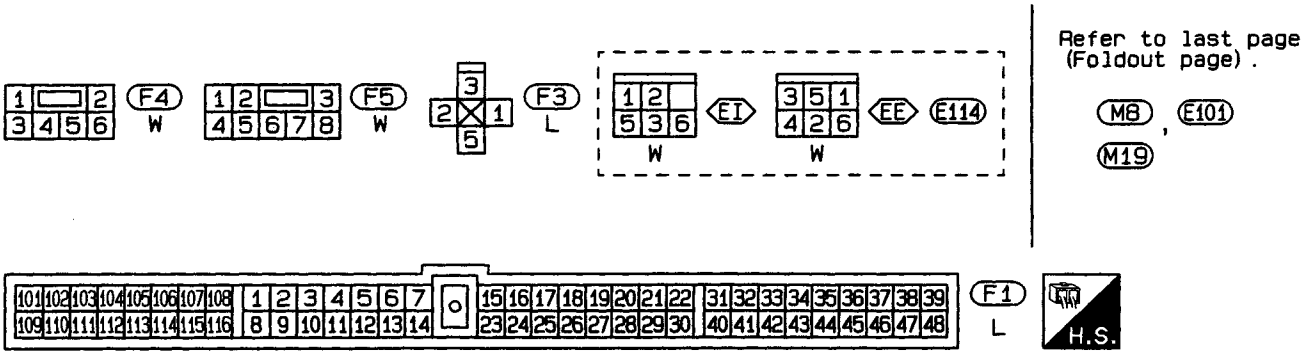

HEC026

Simpo PDF Merge and Split Unregistered Version - http://www.simpopdf.com

Except GA16DE for Australia

EC-MAIN-02

: Detectable line for DTC

: Non-detectable line for DTC

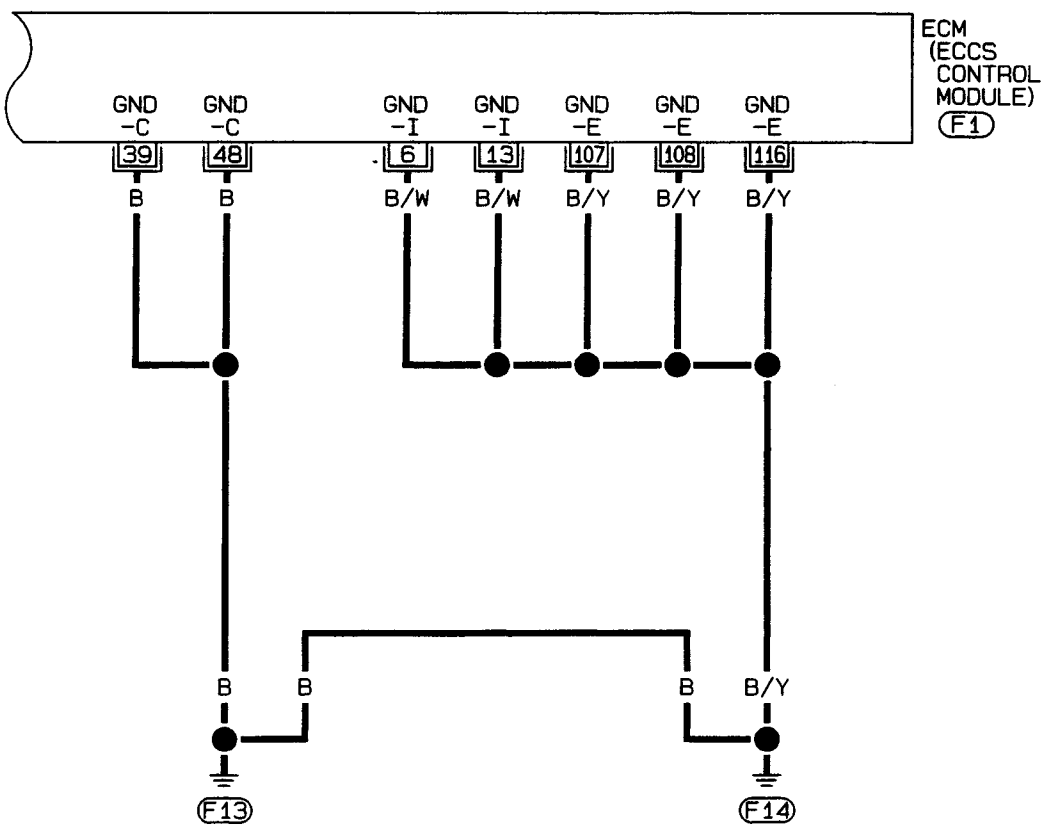

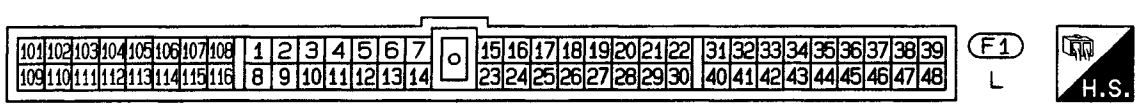

HEC027

Simpo PDF Merge and Split Unregistered Version - http://www.simpopdf.com

Main Power Supply and Ground Circuit (Cont'd)

GA16DE for Australia

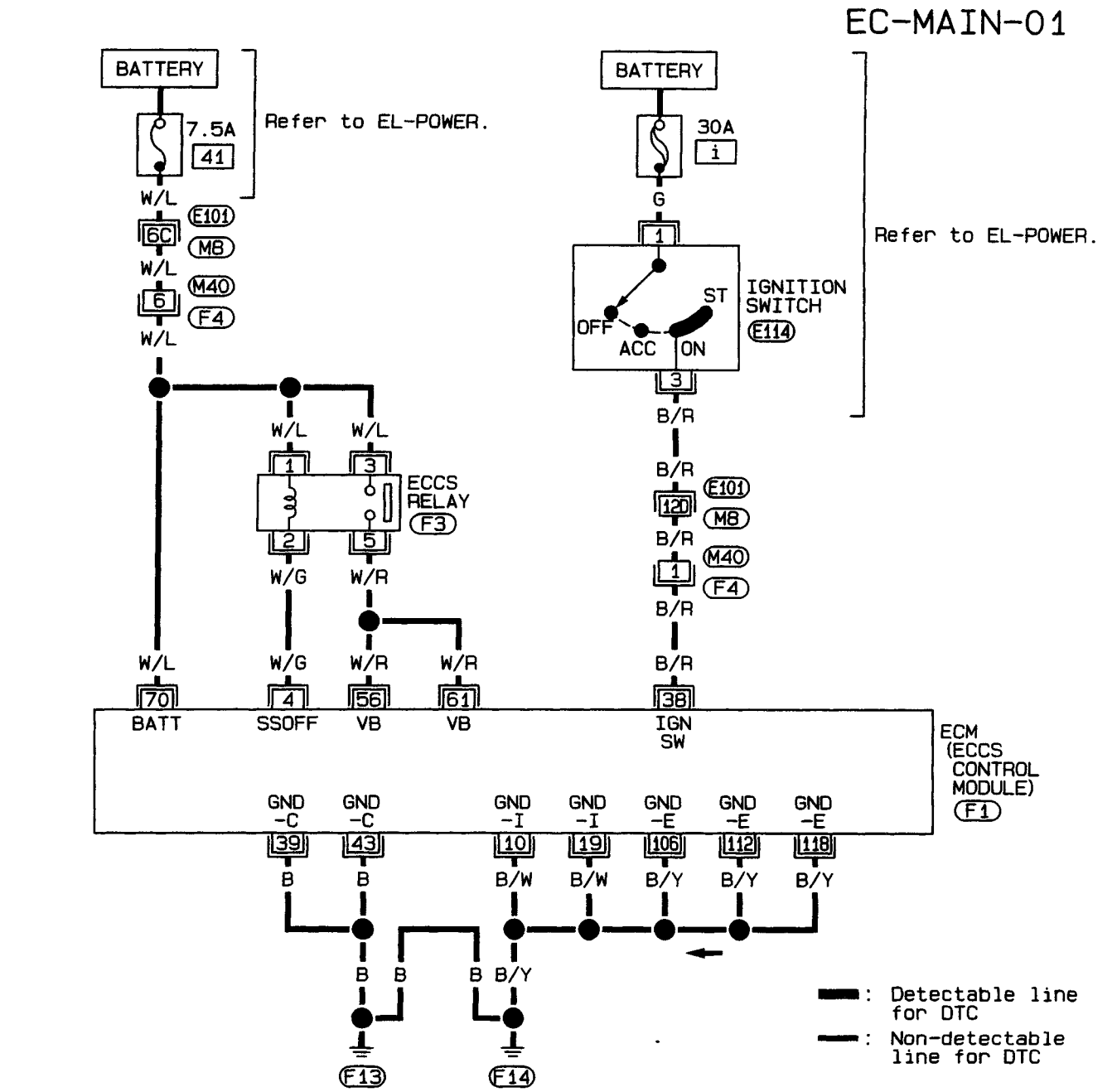

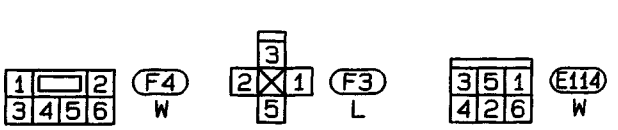

Refer to last page (Foldout page).

M8 , E101

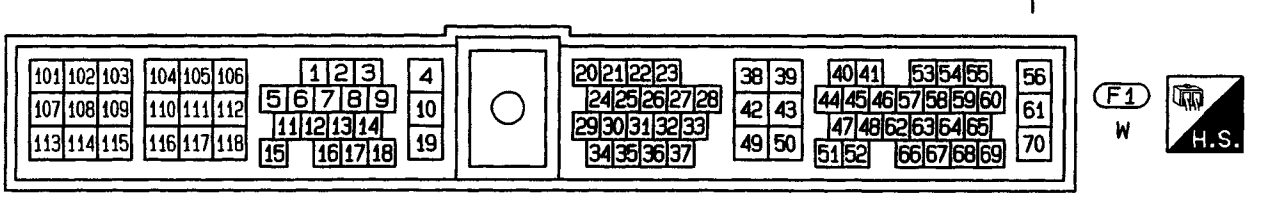

HEC062

Simpo PDF Merge and Split Unregistered Version - http://www.simpopdf.com

Main Power Supply and Ground Circuit (Cont'd)

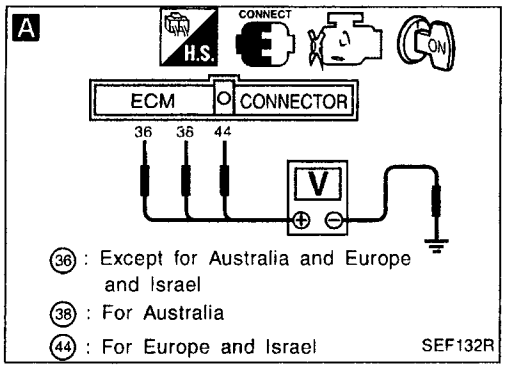

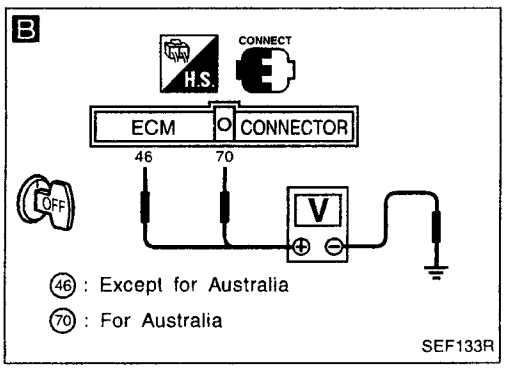

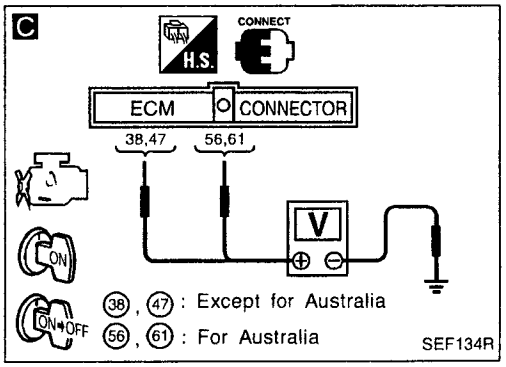

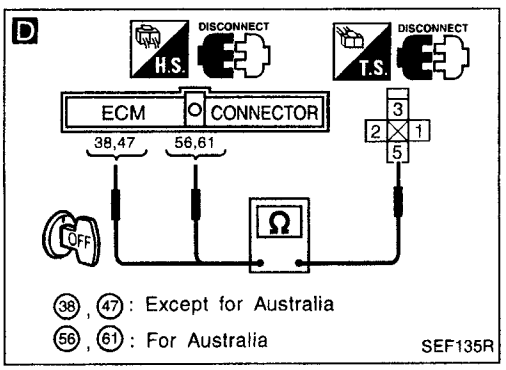

INSPECTION START

Start engine.
Is engine running?

No → **A**

CHECK POWER SUPPLY-I.
1. Turn ignition switch "ON".
2. Check voltage between ECM terminal 36, 38 or 44 and ground with CONSULT or tester.
   Voltage: Battery voltage

If NG, check the following.
- Harness connectors F4, M40 or F5, M41
- Harness connectors M8, E101
- Harness for open or short between ECM and ignition switch

If NG, repair harness or connectors.

OK → Go to H "CHECK GROUND CIRCUIT" on next page.

Yes → **B**

CHECK POWER SUPPLY-II.
1. Stop engine.
2. Check voltage between ECM terminal 46 or 70 and ground with CONSULT or tester.
   Voltage: Battery voltage

NG → Check the following.
- Harness connectors F4, M40 or F5, M41 or F4, M71
- Harness connectors M8, E101 or F4, M78
- Harness connectors M12, E101
- Joint connector M19
- 7.5A fuse
- Harness for open or short between ECM and battery

If NG, repair harness or connectors.

OK → **C**

CHECK POWER SUPPLY-III.
1. Turn ignition switch "ON" and then "OFF".
2. Check voltage between ECM terminals 38, 47, or 56, 61 and ground with CONSULT or tester.
   After turning ignition switch "OFF", battery voltage will exist for a few seconds, then drop to approximately 0V.

OK → Go to H "CHECK GROUND CIRCUIT" on next page.

Case-1: Battery voltage does not exist for a few seconds.
Case-2: Battery voltage exists for more than a few seconds.

NG

Case-1 → Go to G "CHECK ECCS RELAY" on next page.

Case-2 → Ⓐ

EC

Simpo PDF Merge and Split Unregistered Version - http://www.simpopdf.com

Main Power Supply and Ground Circuit (Cont'd)

E

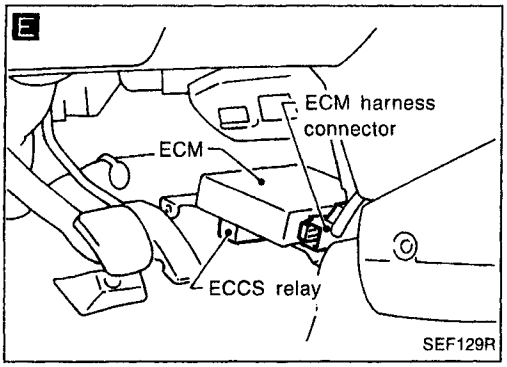

SEF129R

E

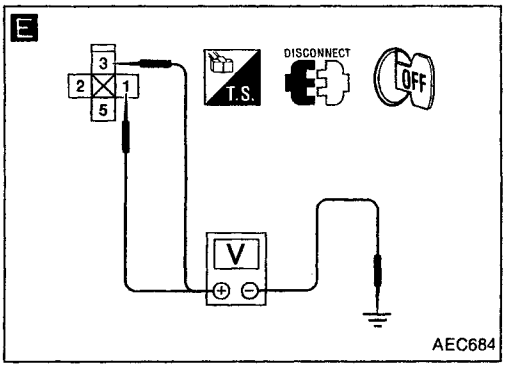

AEC684

F

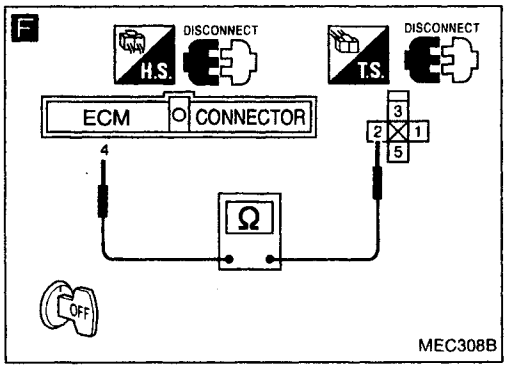

MEC308B

G

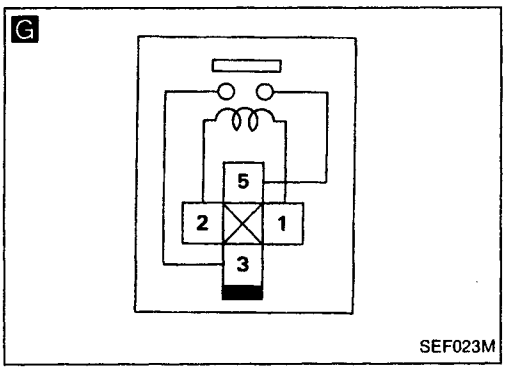

SEF023M

Ⓐ

D

CHECK HARNESS CONTINUITY BETWEEN ECCS RELAY AND ECM
1. Disconnect ECM harness connector.
2. Disconnect ECCS relay.
3. Check harness continuity between ECM terminals ㊳, ㊼, or ㊺, ㊶ and terminal ⑤.
   Continuity should exist.
   If OK, check harness for short.

NG → Repair harness or connectors.

OK

E

CHECK VOLTAGE BETWEEN ECCS RELAY AND GROUND.
1. Check voltage between terminals ①, ③ and ground with CONSULT or tester.
   Voltage: Battery voltage

NG → Check the following.
- Harness connectors (F4), (M40) or (F5), (M41) or (F4), (M71)
- Harness connectors (M8), (E101) or (F4), (M78)
- Harness connectors (M12), (E101)
- Joint connector (M19)
- Harness for open or short between ECCS relay and battery

If NG, repair harness or connectors.

OK

F

CHECK OUTPUT SIGNAL CIRCUIT.
1. Check harness continuity between ECM terminal ④ and terminal ②.
   Continuity should exist.
   If OK, check harness for short.

NG → Repair harness or connectors.

OK

G

CHECK ECCS RELAY.
1. Apply 12V direct current between relay terminals ① and ②.
2. Check continuity between relay terminals ③ and ⑤.
   12V (① - ②) applied:
   Continuity exists.
   No voltage applied:
   No continuity

NG → Replace ECCS relay.

OK

Ⓑ

Simpo PDF Merge and Split Unregistered Version - http://www.simpopdf.com

Main Power Supply and Ground Circuit (Cont'd)

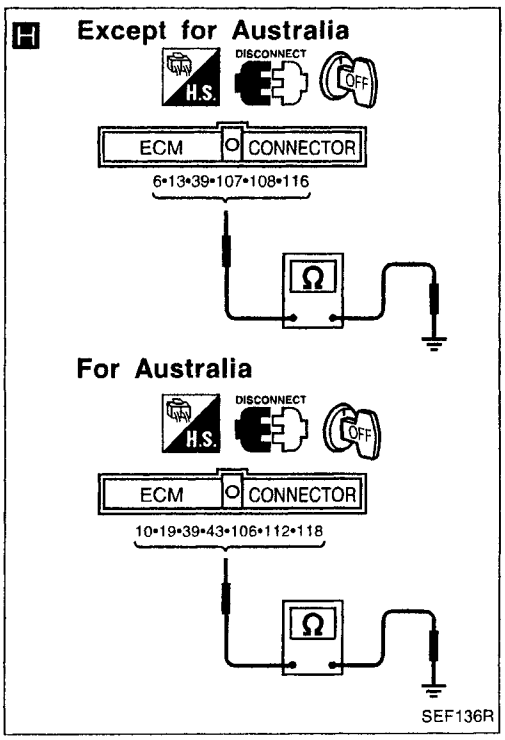

Ⓑ

H

CHECK GROUND CIRCUIT.
1. Turn ignition switch "OFF".
2. Loosen and retighten engine ground screws.
3. Disconnect ECM harness connector.
4. Check harness continuity between ECM terminals ⑥, ⑬, ㊴, ㊽, ⑩⑦, ⑩⑧, ⑪⑥, or ⑩, ⑲, ㊴, ㊸, ⑩⑥, ⑪②, ⑪⑧ and engine ground.
Continuity should exist.
If OK, check harness for short.

NG → Repair harness or connectors.

OK ↓

Check ECM pin terminals for damage or the connection of ECM harness connector.

↓

INSPECTION END

EC

Simpo PDF Merge and Split Unregistered Version - http://www.simpopdf.com

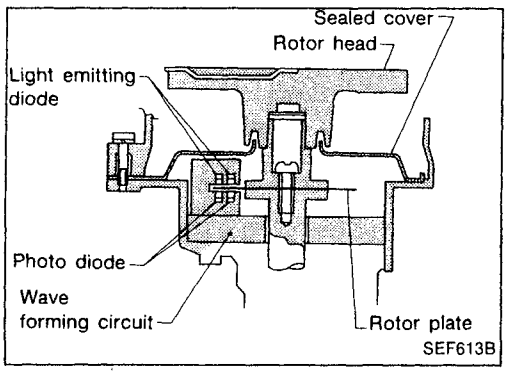

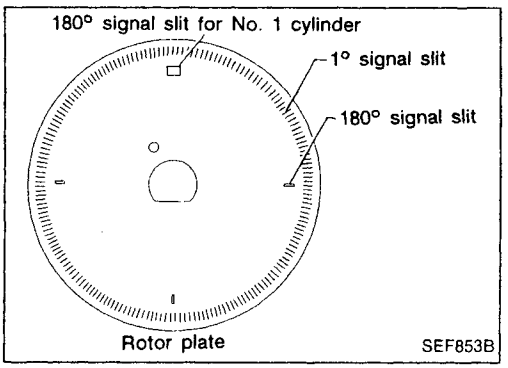

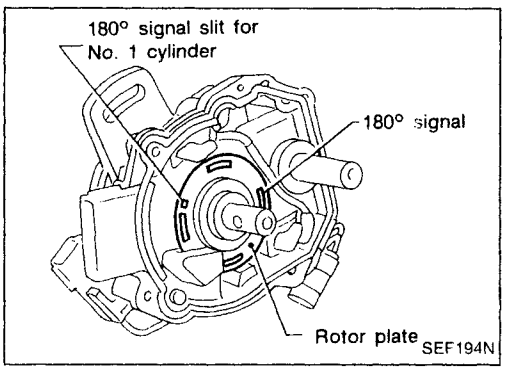

Camshaft Position Sensor (CMPS)

The camshaft position sensor is a basic component of the ECCS. It monitors engine speed and piston position. These input signals to the ECM are used to control fuel injection, ignition timing and other functions.

The camshaft position sensor has a rotor plate and a wave-forming circuit. The rotor plate has 360 slits for a 1° (POS) signal (except for Europe and Israel) and 4 slits for a 180° (REF) signal. The wave-forming circuit consists of Light Emitting Diodes (LED) and photo diodes.

The rotor plate is positioned between the LED and the photo diode. The LED transmits light to the photo diode. As the rotor plate turns, the slits cut the light to generate rough-shaped pulses. These pulses are converted into on-off signals by the wave-forming circuit and sent to the ECM.

Diagnostic Trouble Code No.	Malfunction is detected when	Check Items (Possible cause)
11	• Either 1° or 180° signal is not entered to ECM for the first few seconds during engine cranking. • Either 1° or 180° signal is not entered to ECM often enough while the engine speed is higher than the specified engine speed. • The relation between 1° and 180° signal is not in the normal range during the specified engine speed.	• Harness or connectors (The camshaft position sensor circuit is open or shorted.) • Camshaft position sensor • Starter motor (Refer to EL section.) • Starting system circuit (Refer to EL section.) • Dead (Weak) battery

Simpo PDF Merge and Split Unregistered Version - http://www.simpopdf.com

Camshaft Position Sensor (CMPS) (Cont'd)

DIAGNOSTIC TROUBLE CODE CONFIRMATION PROCEDURE



1) Turn ignition switch "ON" and select "DATA MONITOR" mode with CONSULT.
2) Crank engine for at least 2 seconds.

OR



1) Crank engine for at least 2 seconds.
2) Turn ignition switch "OFF", wait for at least 5 seconds and then turn "ON".
3) Perform "Diagnostic Test Mode II" (Self-diagnostic results) with ECM.

EC

Simpo PDF Merge and Split Unregistered Version - http://www.simpopdf.com

Camshaft Position Sensor (CMPS) (Cont'd)

For Europe and Israel

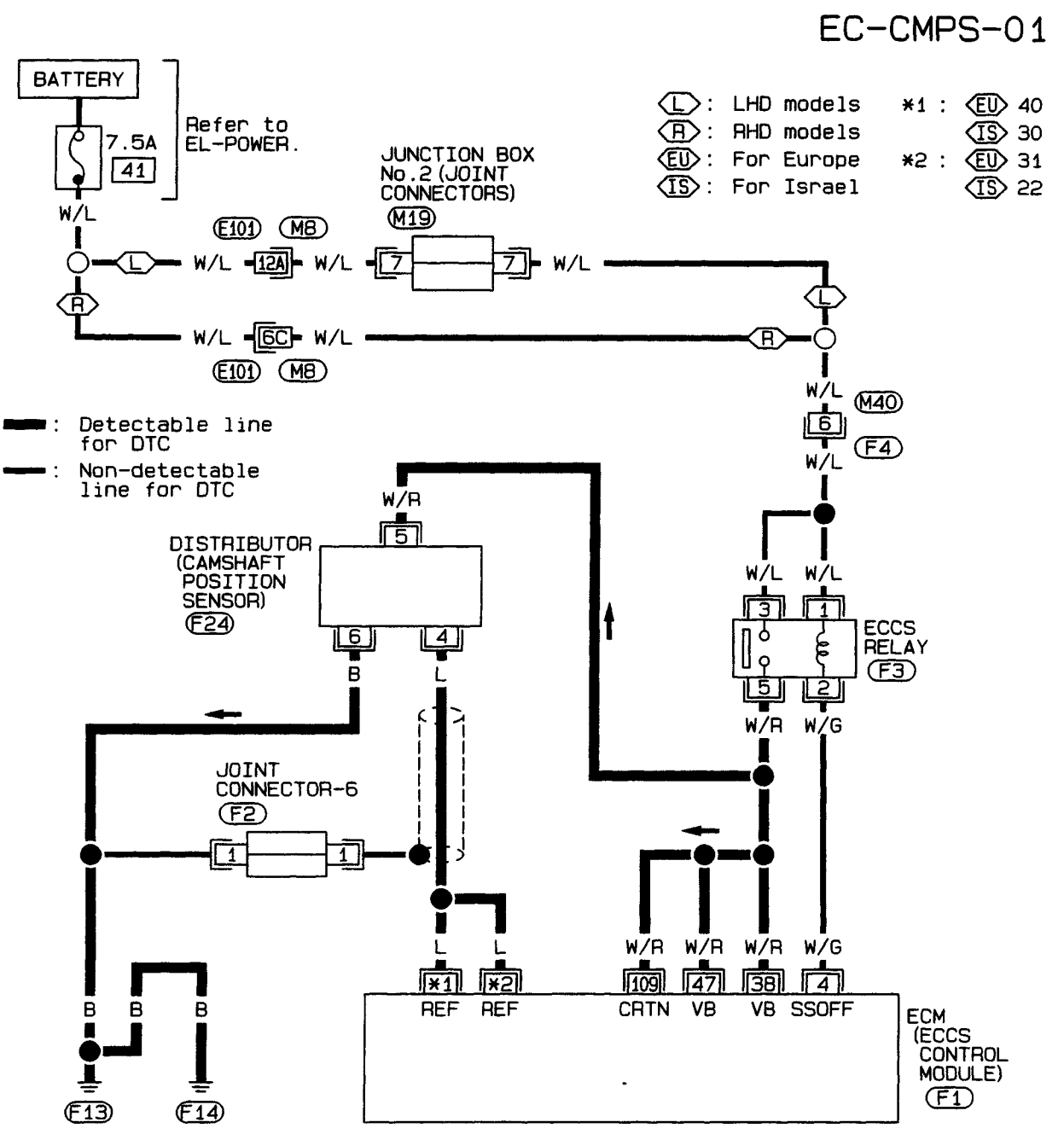

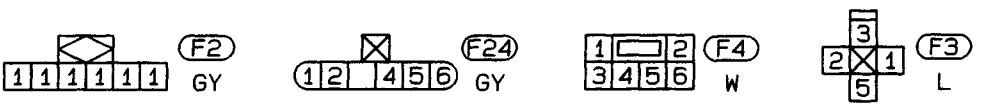

Refer to last page (Foldout page).

M8, E101, M19

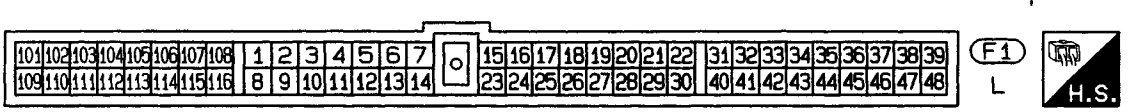

HEC028

Simpo PDF Merge and Split Unregistered Version - http://www.simpopdf.com

Camshaft Position Sensor (CMPS) (Cont'd)

Except for Europe and Israel

EC-CMPS-02

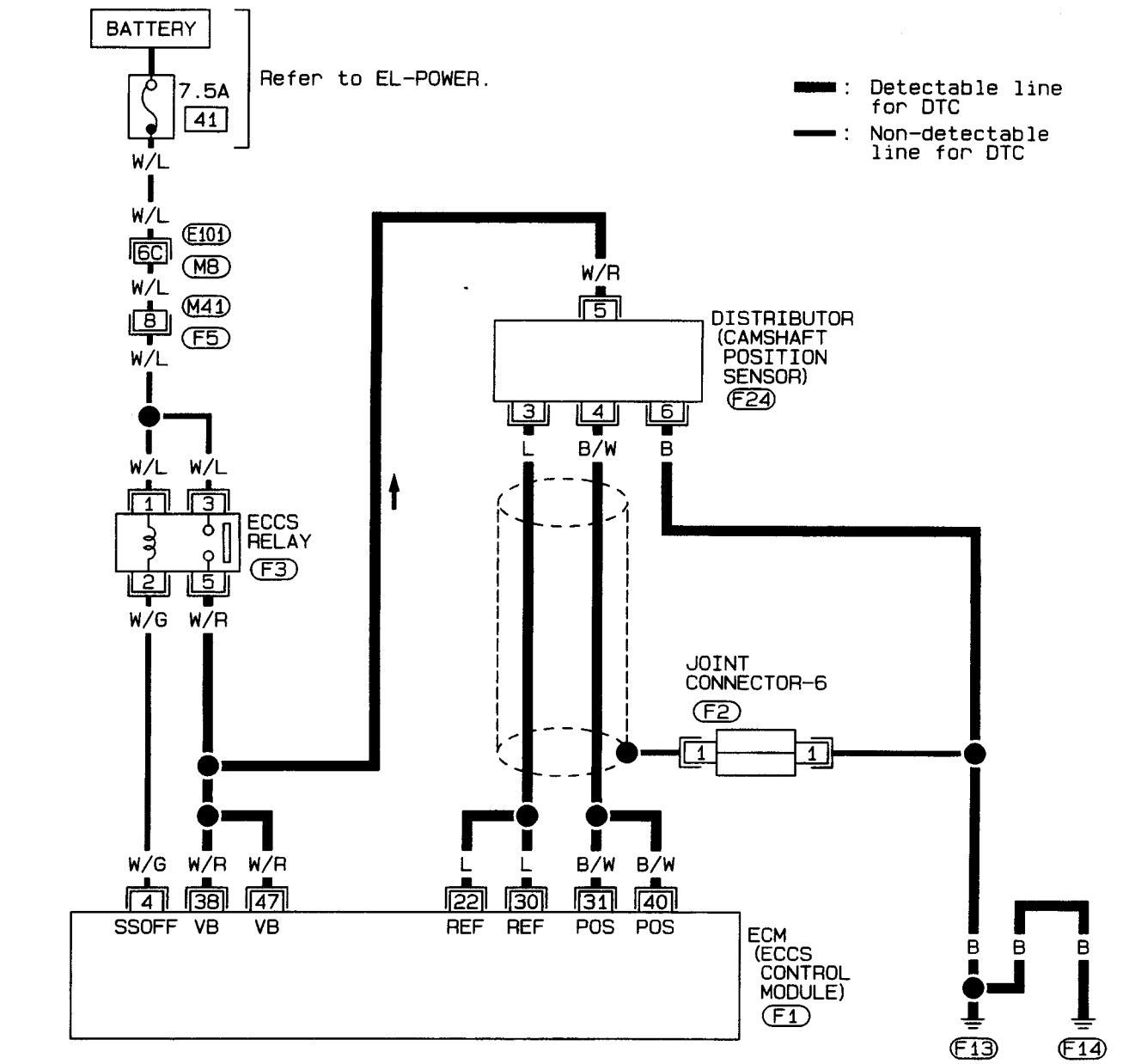

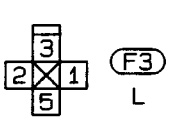

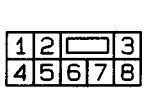

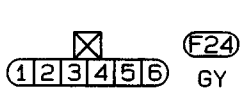

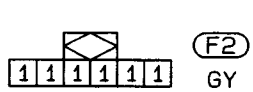

Refer to last page (Foldout page).

M8, E101

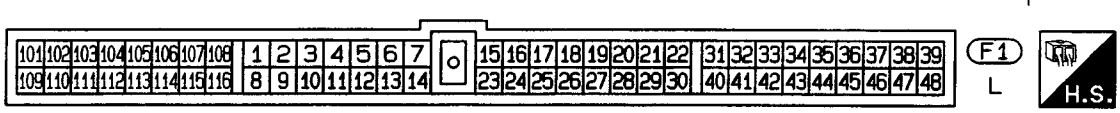

HEC029

Simpo PDF Merge and Split Unregistered Version - http://www.simpopdf.com

Camshaft Position Sensor (CMPS) (Cont'd)

GA16DE for Australia

EC-CMPS-01

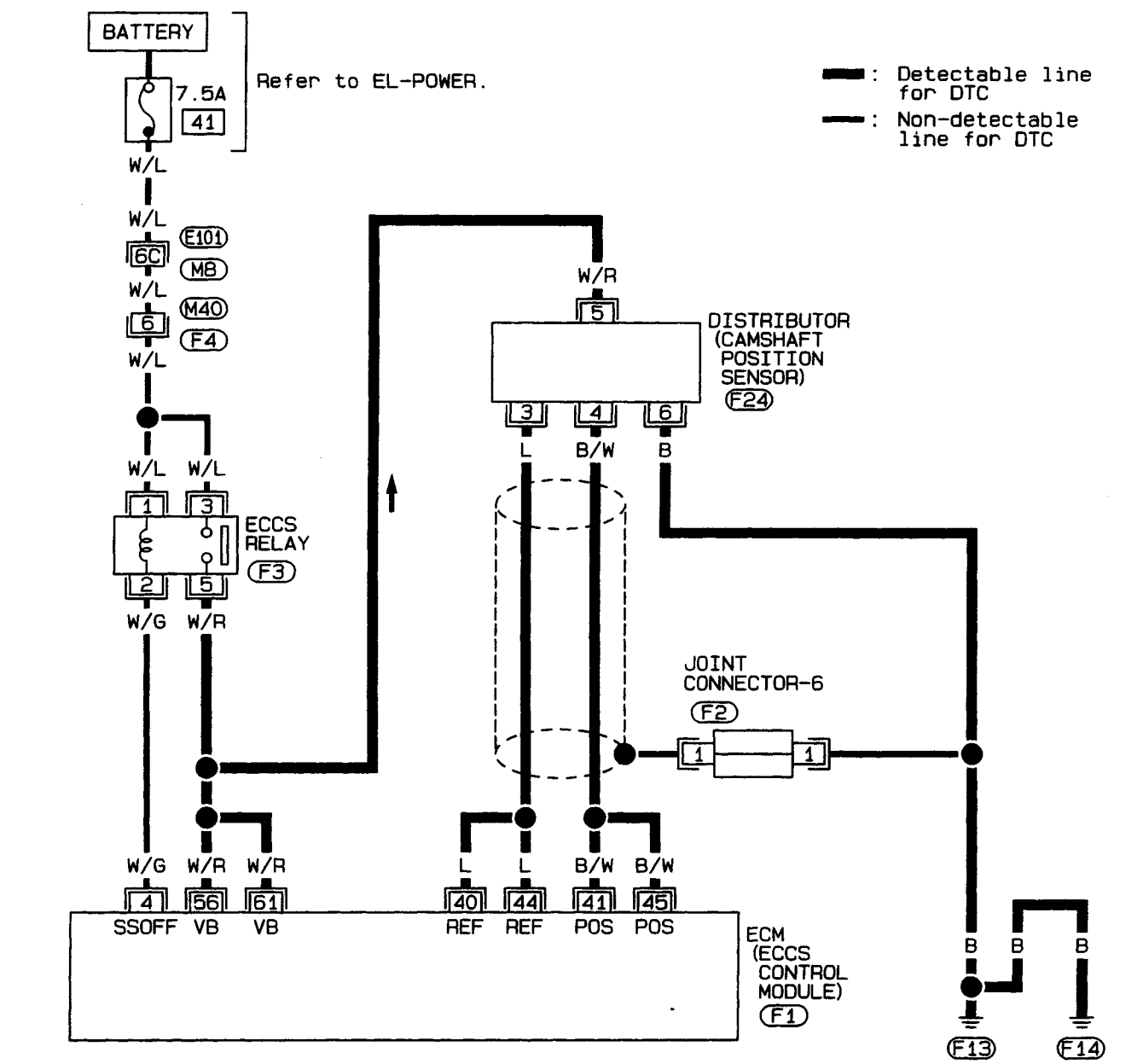

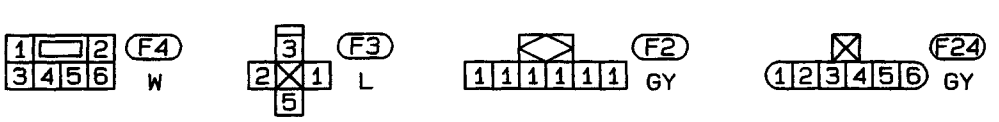

Refer to last page (Foldout page).

M8, E101

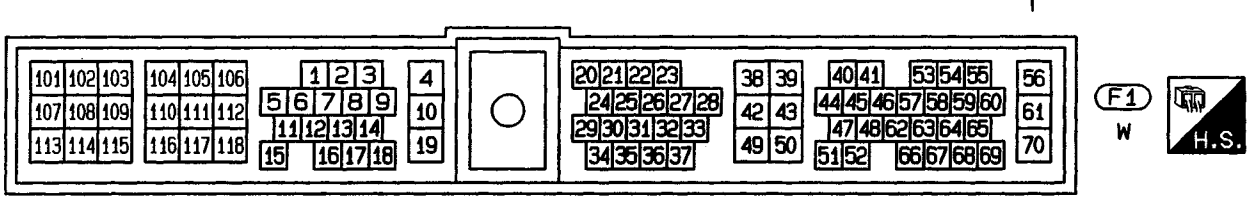

HEC063

Simpo PDF Merge and Split Unregistered Version - http://www.simpopdf.com

Camshaft Position Sensor (CMPS) (Cont'd)

DIAGNOSTIC PROCEDURE

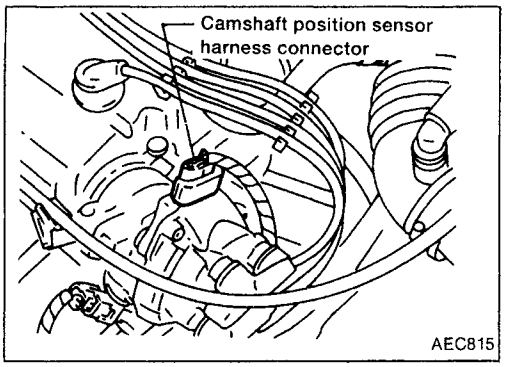

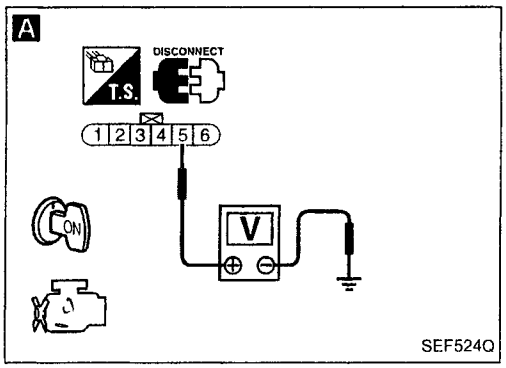

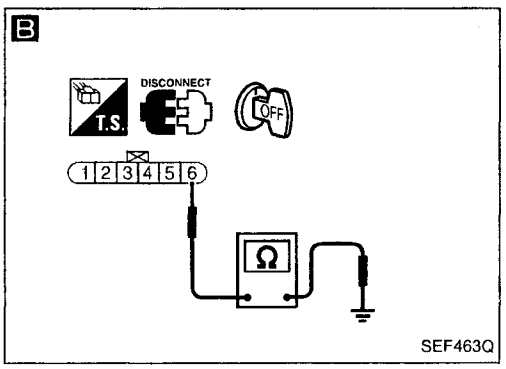

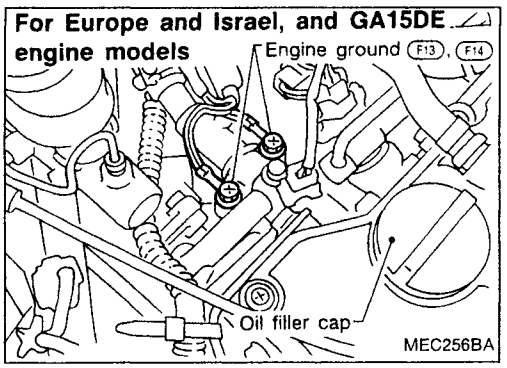

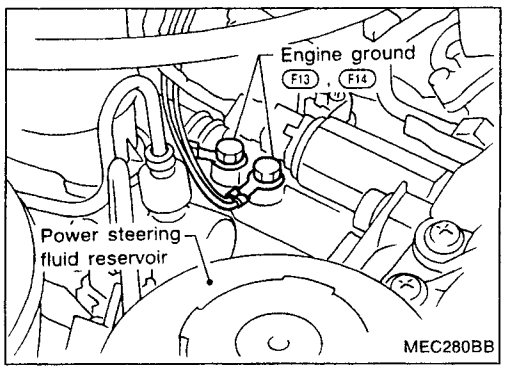

INSPECTION START

A

CHECK POWER SUPPLY.
1. Turn ignition switch "OFF".
2. Disconnect camshaft position sensor harness connector.
3. Turn ignition switch "ON".
4. Check voltage between terminal ⑤ and ground with CONSULT or tester.

Voltage: Battery voltage

NG → Check the following.
- Harness for open or short between camshaft position sensor and ECCS relay

If NG, repair harness or connectors.

OK

B

CHECK GROUND CIRCUIT.
1. Turn ignition switch "OFF".
2. Loosen and retighten engine ground screws.
3. Check harness continuity between terminal ⑥ and engine ground.

Continuity should exist.

If OK, check harness for short.

NG → Repair harness or connectors.

OK

C

CHECK INPUT SIGNAL CIRCUIT.
1. Disconnect ECM harness connector.
2. Check harness continuity between terminal ④ and ECM terminals ㉛, ㊵, or ㉒, ㉚ or ㊶, ㊺ terminal ③ and ECM terminals ㊵, ㊹ or ㉒, ㉚.

Continuity should exist.

If OK, check harness for short.

NG → Repair harness or connectors.

OK

CHECK COMPONENT (Camshaft position sensor). Refer to "COMPONENT INSPECTION" on next page.

NG → Replace camshaft position sensor.

OK

Disconnect and reconnect harness connectors in the circuit. Then retest.

Trouble is not fixed.

Check ECM pin terminals for damage or the connection of ECM harness connector. Reconnect ECM harness connector and retest.

INSPECTION END

EC

Simpo PDF Merge and Split Unregistered Version - http://www.simpopdf.com

Camshaft Position Sensor (CMPS) (Cont'd)

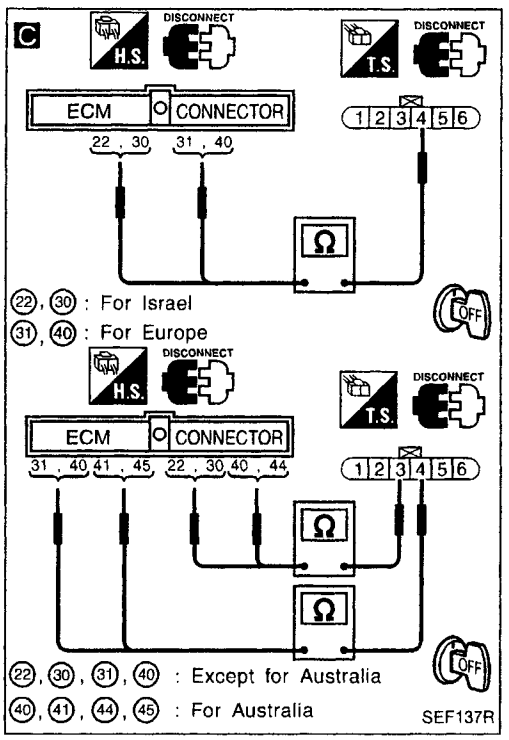

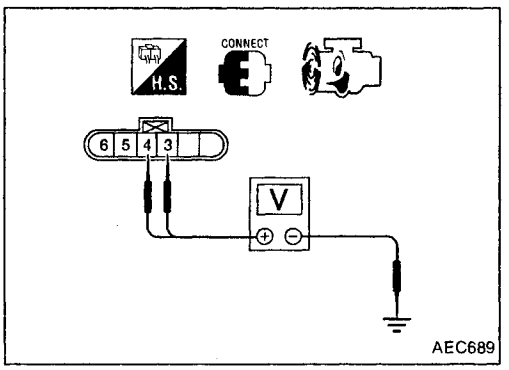

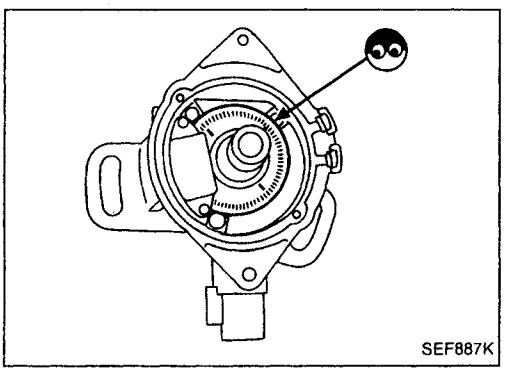

COMPONENT INSPECTION

Camshaft position sensor

1. Start engine.
2. Check voltage between camshaft position sensor terminals ③, ④ and ground with AC range.

Terminal	Voltage
③: Except for Europe and Israel ④: For Europe and Israel (180° signal)	Tester's pointer fluctuates between 5V and 0V.
④: Except for Europe and Israel (1° signal)	

3. If NG, replace distributor assembly with camshaft position sensor.
4. Remove distributor cap. Visually check signal plate for damage or dust.

After this inspection, diagnostic trouble code No. 11 might be displayed with camshaft position sensor functioning properly. Erase the stored memory.

Simpo PDF Merge and Split Unregistered Version - http://www.simpopdf.com

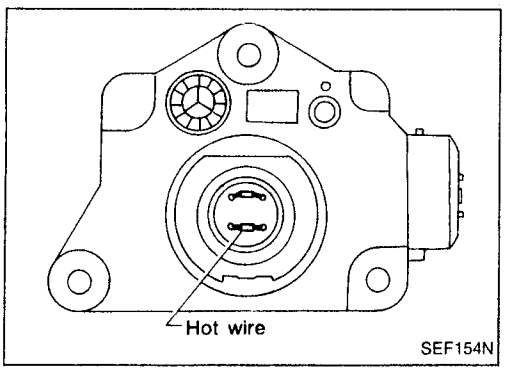

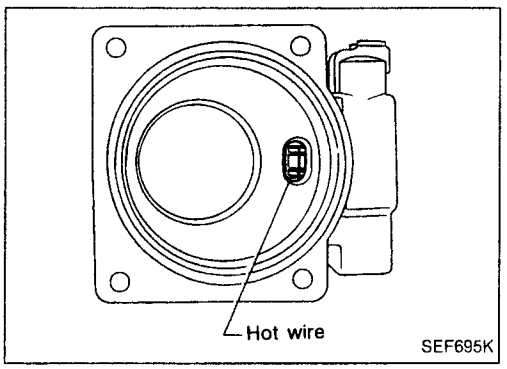

Mass Air Flow Sensor (MAFS)

The mass air flow sensor measures the intake air flow rate by taking a part of the entire flow. Measurements are made in such a manner that the ECM receives electrical output signals varied by the amount of heat emitting from the hot wire placed in the stream of the intake air.

When intake air flows into the intake manifold through a route around the hot wire, the heat generated from the hot wire is taken away by the air. The amount of heat depends on the air flow. On the other hand, the temperature of the hot wire is automatically controlled to a certain number of degrees.

Therefore, it is necessary to supply the hot wire with more electric current in order to maintain the temperature of the hot wire. The ECM knows the air flow by means of the electric change.

EC

Diagnostic Trouble Code No.	Malfunction is detected when ...	Check Items (Possible Cause)
12	• An excessively high or low voltage from the sensor is entered to ECM.	• Harness or connectors (The sensor circuit is open or shorted.) • Mass air flow sensor

DIAGNOSTIC TROUBLE CODE CONFIRMATION PROCEDURE

1) Turn ignition switch "ON", and wait for at least 6 seconds.
2) Select "DATA MONITOR" mode with CONSULT.
3) Start engine and wait for at least 3 seconds.

OR

1) Turn ignition switch "ON", and wait for at least 6 seconds.
2) Start engine and wait for at least 3 seconds.
3) Turn ignition switch "OFF", wait for at least 5 seconds and then turn "ON".
4) Perform "Diagnostic Test Mode II" (Self-diagnostic results) with ECM.

Simpo PDF Merge and Split Unregistered Version - http://www.simpopdf.com

Mass Air Flow Sensor (MAFS) (Cont'd)

GA14DE, 16DE engine for Europe and Israel, and GA15DE engine

EC-MAFS-01

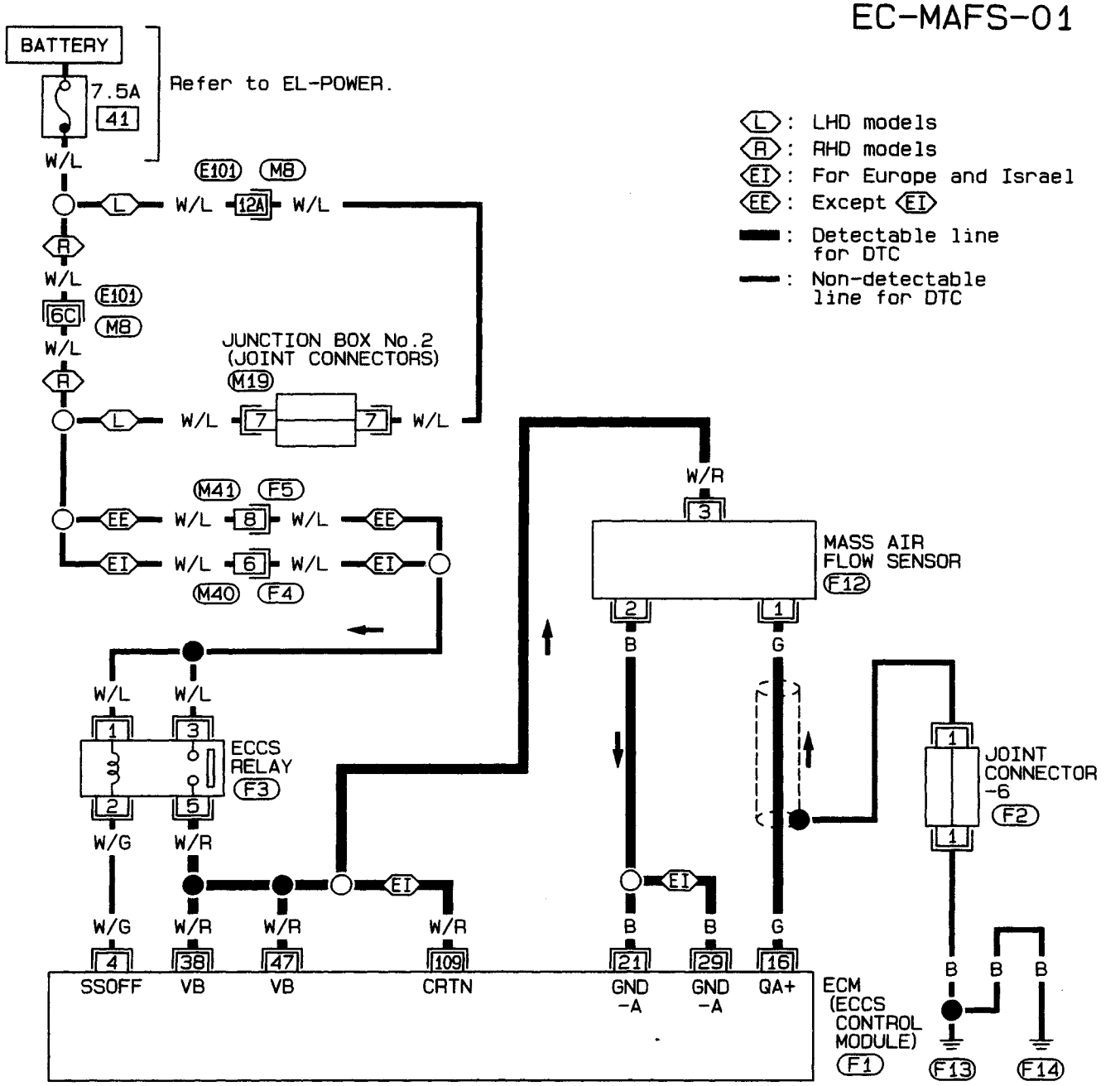

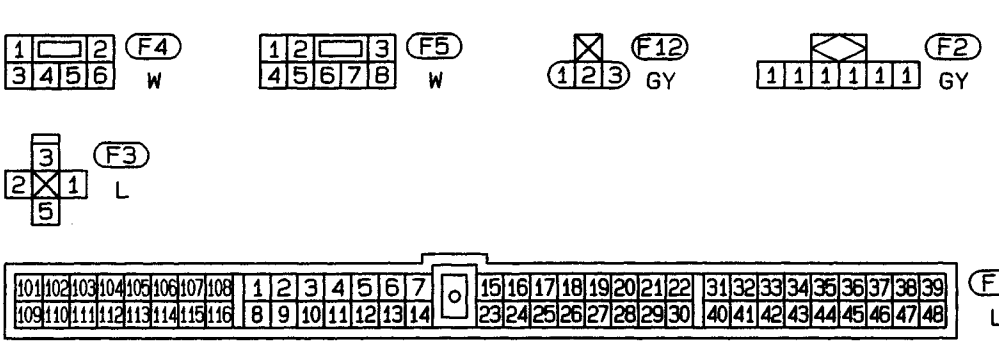

Refer to last page (Foldout page).

M8, E101, M19

HEC030

Simpo PDF Merge and Split Unregistered Version - http://www.simpopdf.com

Mass Air Flow Sensor (MAFS) (Cont'd)

GA16DE engine models except for Europe and Israel

EC-MAFS-02

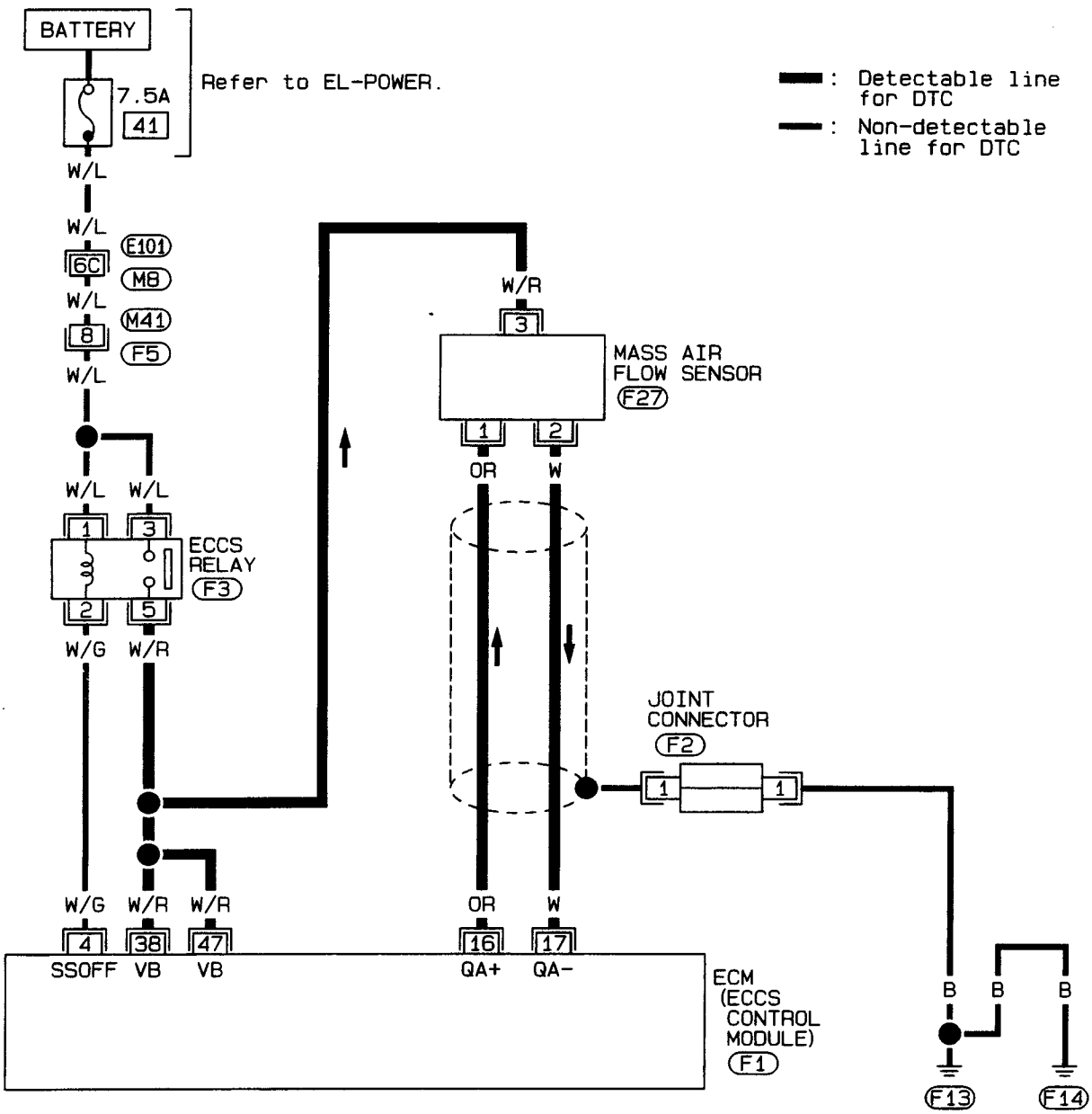

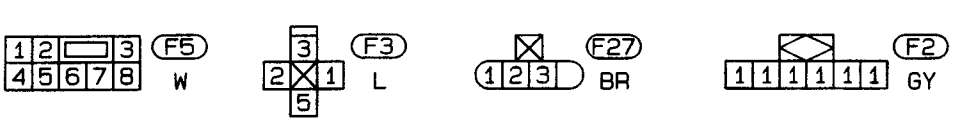

Refer to last page (Foldout page).

M8, E101

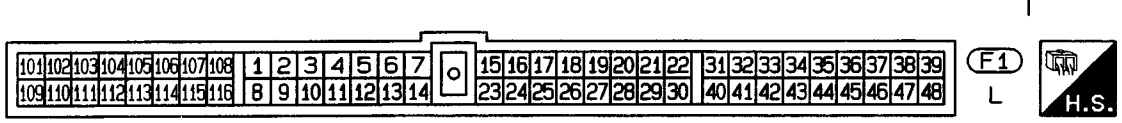

HEC031

Simpo PDF Merge and Split Unregistered Version - http://www.simpopdf.com

Mass Air Flow Sensor (MAFS) (Cont'd)

GA16DE for Australia

EC-MAFS-01

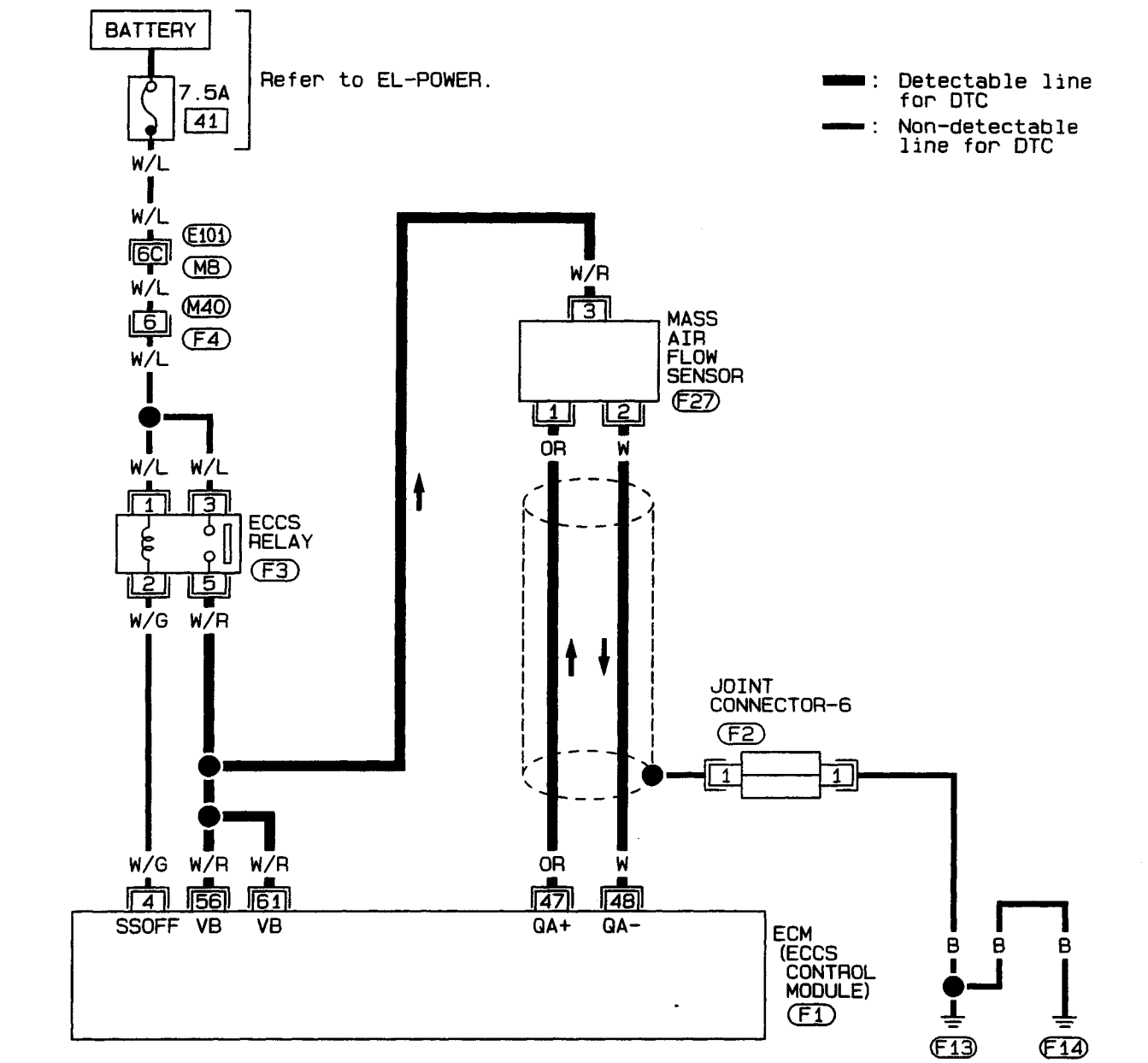

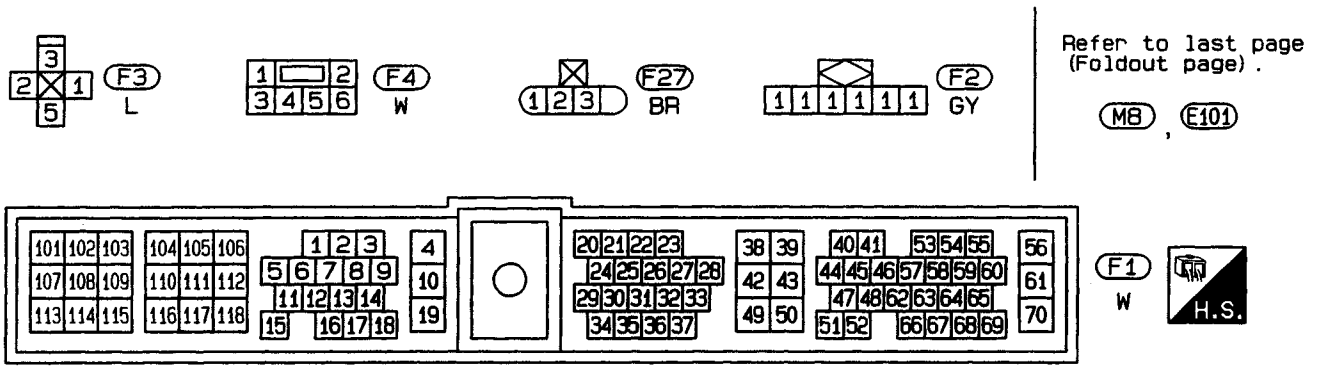

HEC064

Simpo PDF Merge and Split Unregistered Version - http://www.simpopdf.com

Mass Air Flow Sensor (MAFS) (Cont'd)

DIAGNOSTIC PROCEDURE

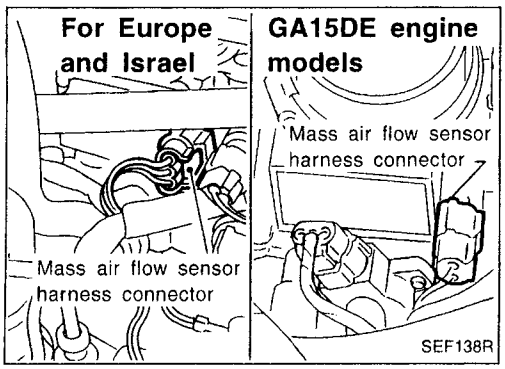

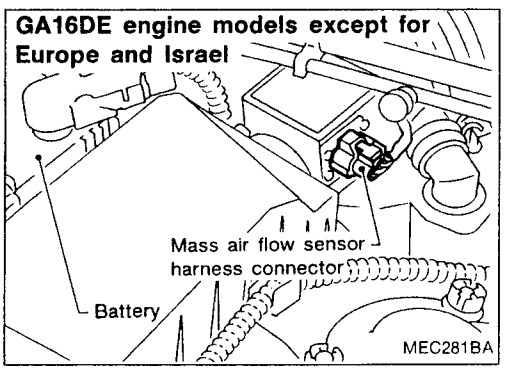

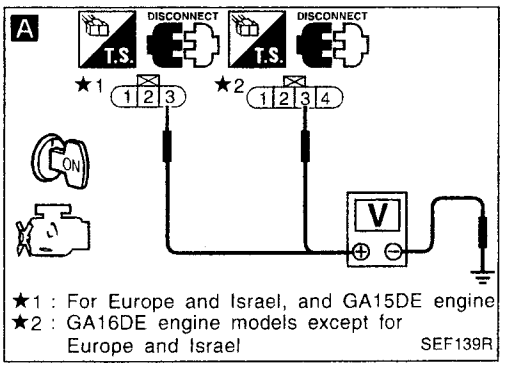

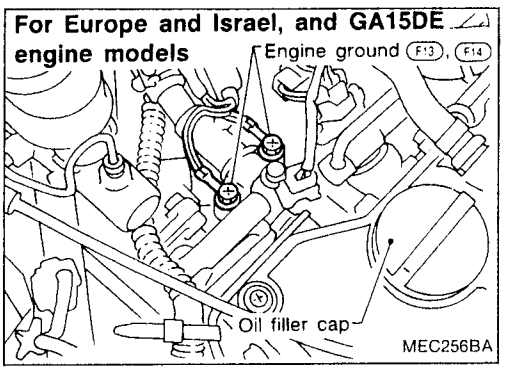

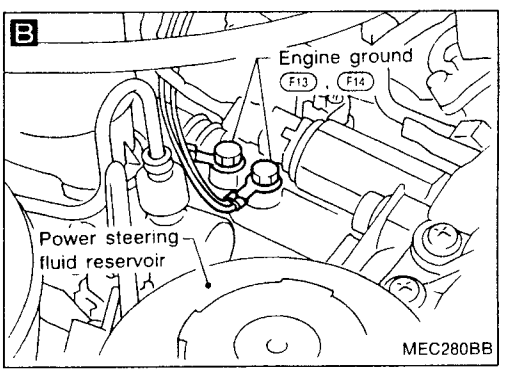

INSPECTION START

A

CHECK POWER SUPPLY.
1. Turn ignition switch "OFF".
2. Disconnect mass air flow sensor harness connector.
3. Turn ignition switch "ON".
4. Check voltage between terminal ③ and ground with CONSULT or tester.
Voltage: Battery positive voltage

NG → Repair harness or connectors.

OK

B

CHECK GROUND CIRCUIT.
1. Turn ignition switch "OFF".
2. Disconnect ECM harness connector.
3. Loosen and retighten engine ground screws.
4. Check harness continuity between terminal ② and ECM terminal ⑰ or ㊽ or engine ground.
Continuity should exist.
If OK, check harness for short.

NG → Repair harness or connectors.

OK

C

CHECK INPUT SIGNAL CIRCUIT.
Check harness continuity between terminal ① and ECM terminal ⑯ or ㊼.
Continuity should exist.
If OK, check harness for short.

NG → Repair harness or connectors.

OK

CHECK COMPONENT (Mass air flow sensor).
Refer to "COMPONENT INSPECTION" on page EC-107.

NG → Replace mass air flow sensor.

OK

Disconnect and reconnect harness connectors in the circuits. Then retest.

Trouble is not fixed.

Check ECM pin terminals for damage or the connection of ECM harness connector. Reconnect ECM harness connector and retest.

INSPECTION END

EC

Simpo PDF Merge and Split Unregistered Version - http://www.simpopdf.com

B For Europe and Israel, and GA15DE engine

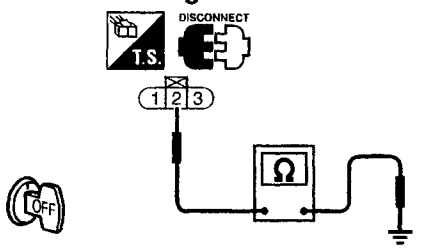

GA16DE engine models except for Europe and Israel

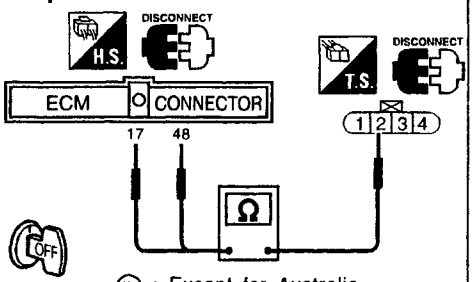

⑰ : Except for Australia
㊽ : For Australia
SEF140R

C For Europe and Israel, and GA15DE engine models

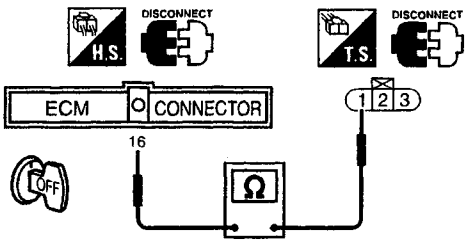

GA16DE engine models except for Europe and Israel

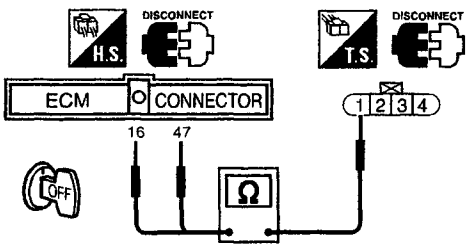

⑯ : Except for Australia
㊼ : For Australia
SEF141R

Simpo PDF Merge and Split Unregistered Version - http://www.simpopdf.com

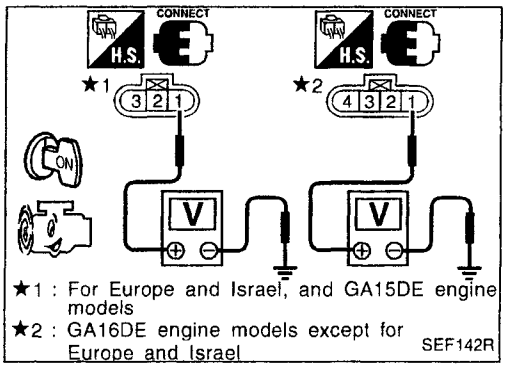

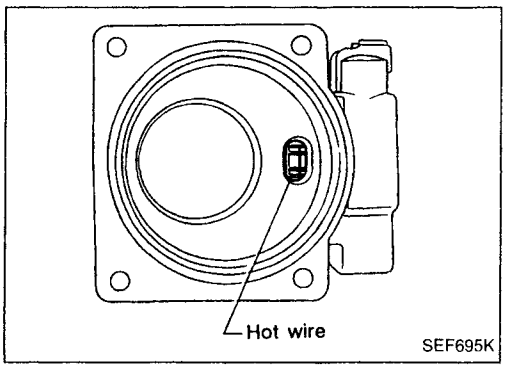

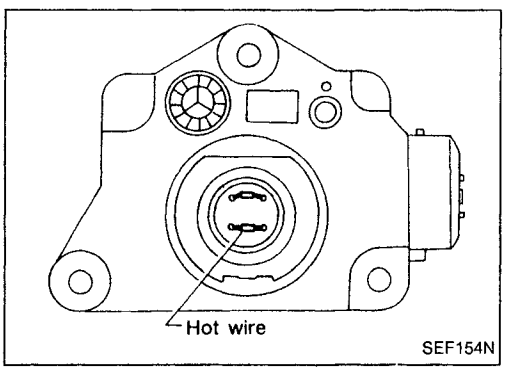

Mass Air Flow Sensor (MAFS) (Cont'd)

COMPONENT INSPECTION

Mass air flow sensor

1. Turn ignition switch "ON".
2. Start engine and warm it up sufficiently.
3. Check voltage between terminal ① and ground.

Conditions	Voltage V
Ignition switch "ON" (Engine stopped.)	Less than 1.0
Idle (Engine is warmed-up sufficiently.)	1.2 - 1.8

4. If NG, remove mass air flow sensor from air duct. Check hot wire for damage or dust.

EC

Simpo PDF Merge and Split Unregistered Version - http://www.simpopdf.com

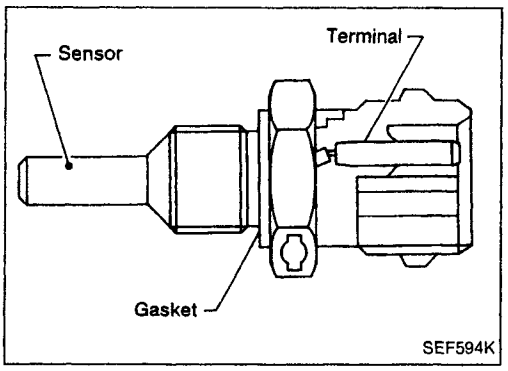

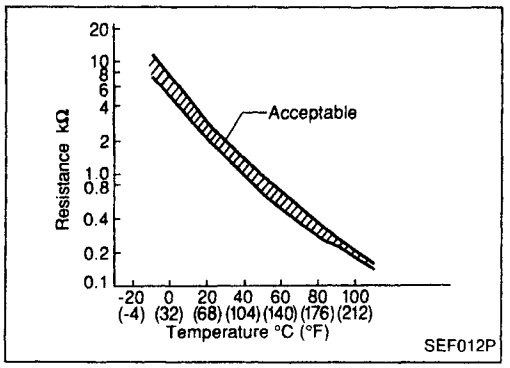

Engine Coolant Temperature Sensor (ECTS)

The engine coolant temperature sensor is used to detect the engine coolant temperature. The sensor modifies a voltage signal from the ECM. The modified signal returns to the ECM as the engine coolant temperature input. The sensor uses a thermistor which is sensitive to the change in temperature. The electrical resistance of the thermistor decreases as temperature increases.

<Reference data>

Engine coolant temperature °C (°F)	Voltage (V)	Resistance (kΩ)
–10 (14)	4.4	7.0 - 11.4
20 (68)	3.5	2.1 - 2.9
50 (122)	2.2	0.6 - 1.0
90 (194)	0.9	0.23 - 0.26

Diagnostic Trouble Code No.	Malfunction is detected when ...	Check Items (Possible Cause)
13	• An excessively high or low voltage from the sensor is entered to ECM.	• Harness or connectors (The sensor circuit is open or shorted.) • Engine coolant temperature sensor

DIAGNOSTIC TROUBLE CODE CONFIRMATION PROCEDURE

1) Turn ignition switch "ON".
2) Select "DATA MONITOR" mode with CONSULT.
3) Wait for at least 5 seconds.

OR

1) Turn ignition switch "ON" and wait for at least 5 seconds.
2) Turn ignition switch "OFF", wait for at least 5 seconds and then turn "ON".
3) Perform "Diagnostic Test Mode II" (Self-diagnostic results) with ECM.

Simpo PDF Merge and Split Unregistered Version - http://www.simpopdf.com

Engine Coolant Temperature Sensor (ECTS) (Cont'd)

EC-ECTS-01

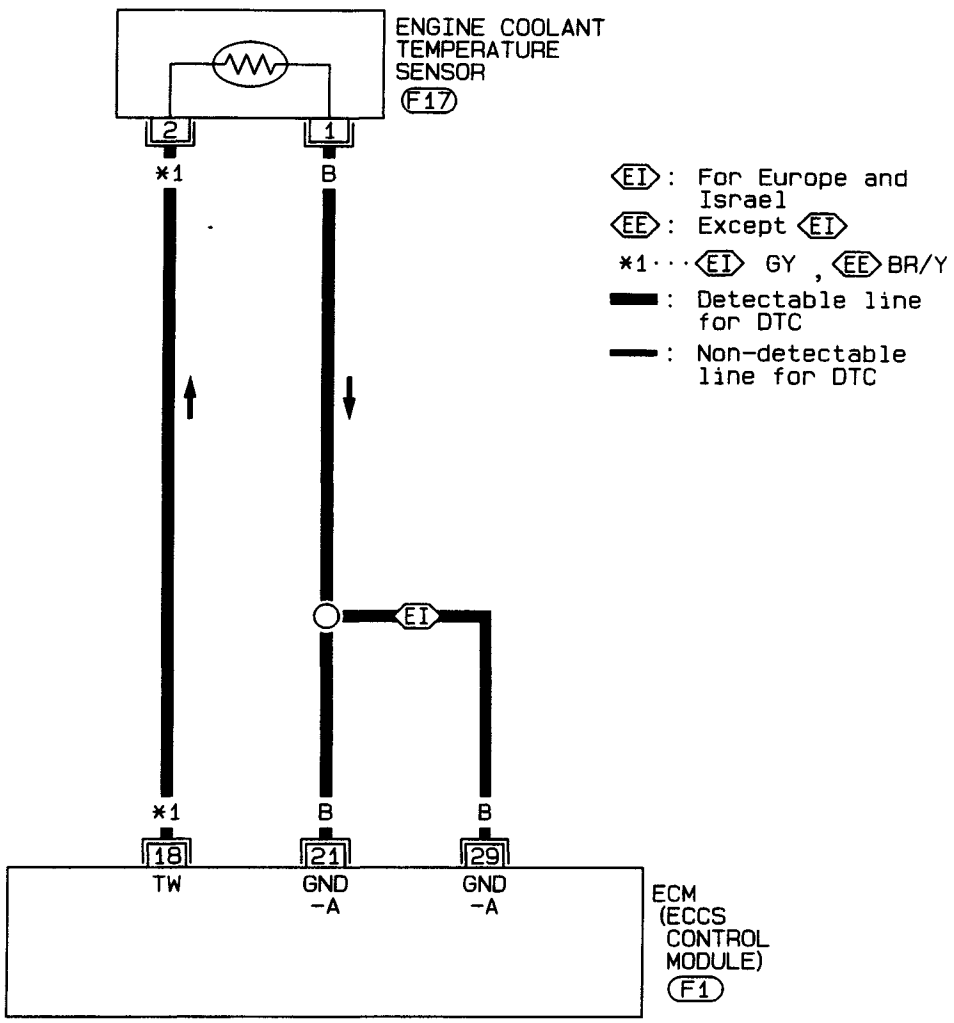

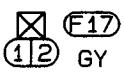

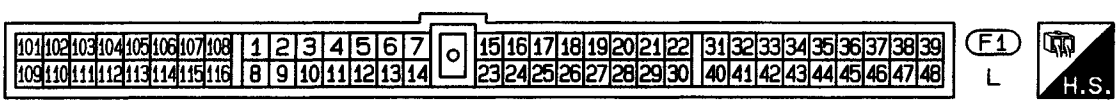

HEC032

Simpo PDF Merge and Split Unregistered Version - http://www.simpopdf.com

Engine Coolant Temperature Sensor (ECTS) (Cont'd)

GA16DE for Australia

EC-ECTS-01

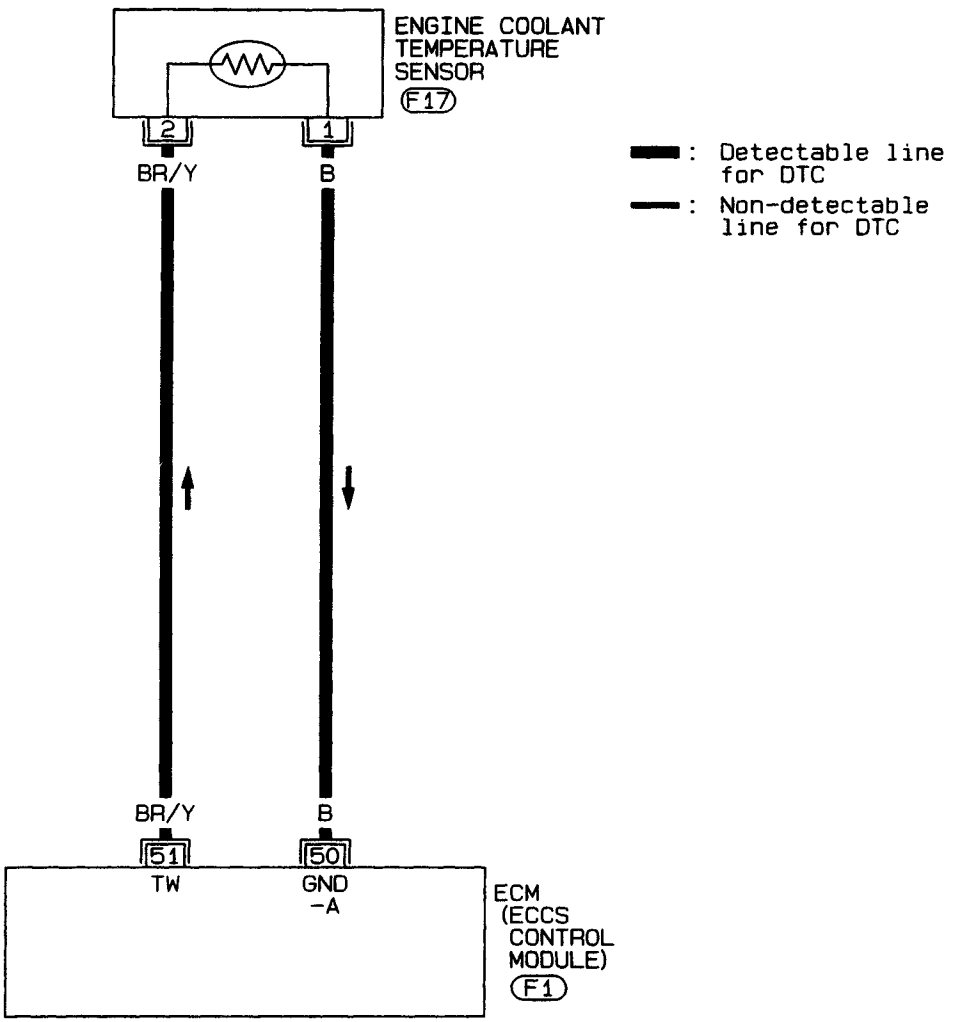

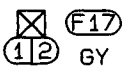

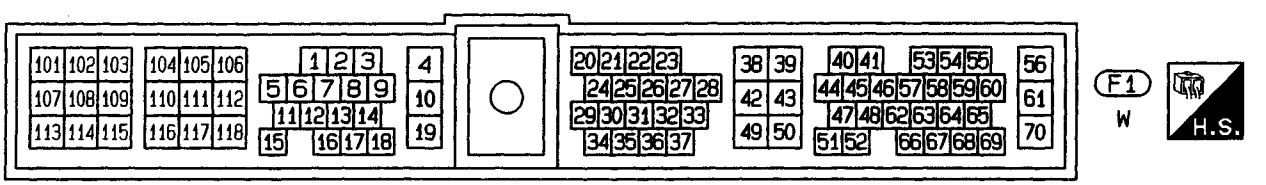

HEC065

Simpo PDF Merge and Split Unregistered Version - http://www.simpopdf.com

Engine Coolant Temperature Sensor (ECTS) (Cont'd)

DIAGNOSTIC PROCEDURE

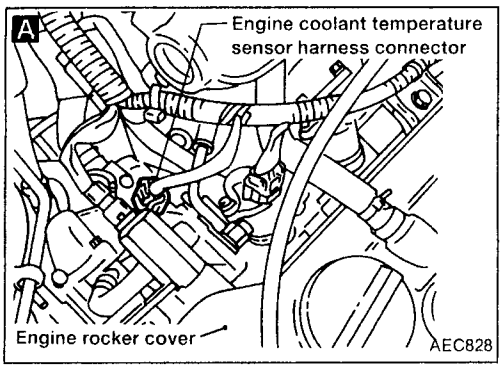

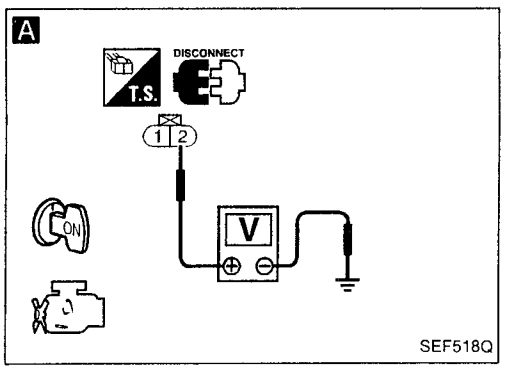

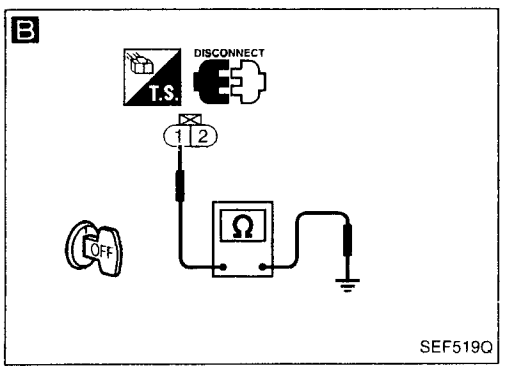

INSPECTION START

A

CHECK POWER SUPPLY.
1. Turn ignition switch "OFF".
2. Disconnect engine coolant temperature sensor harness connector.
3. Turn ignition switch "ON".
4. Check voltage between terminal ② and ground with CONSULT or tester.

Voltage:
Approximately 5V

NG → Check the following.
- Harness for open or short between ECM and engine coolant temperature sensor

If NG, repair harness or connectors.

OK ↓

B

CHECK GROUND CIRCUIT.
1. Turn ignition switch "OFF".
2. Check harness continuity between terminal ① and engine ground.

Continuity should exist.

If OK, check harness for short.

NG → Check the following.
- Harness for open or short between ECM and engine coolant temperature sensor

If NG, repair harness or connectors.

OK ↓

CHECK COMPONENT (Engine coolant temperature sensor). Refer to "COMPONENT INSPECTION" on next page.

NG → Replace engine coolant temperature sensor.

OK ↓

Disconnect and reconnect harness connectors in the circuits. Then retest.

Trouble is not fixed. ↓

Check ECM pin terminals for damage or the connection of ECM harness connector. Reconnect ECM harness connector and retest.

↓

INSPECTION END

EC

Simpo PDF Merge and Split Unregistered Version - http://www.simpopdf.com

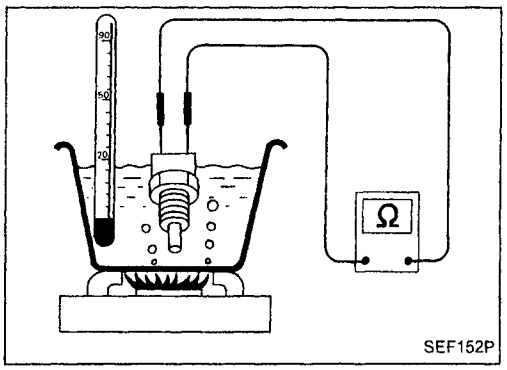

Engine Coolant Temperature Sensor (ECTS) (Cont'd)

COMPONENT INSPECTION

Engine coolant temperature sensor

Check resistance as shown in the figure.

Temperature °C (°F)	Resistance kΩ
20 (68)	2.1 - 2.9
50 (122)	0.68 - 1.00
90 (194)	0.236 - 0.260

If NG, replace engine coolant temperature sensor.

Simpo PDF Merge and Split Unregistered Version - http://www.simpopdf.com

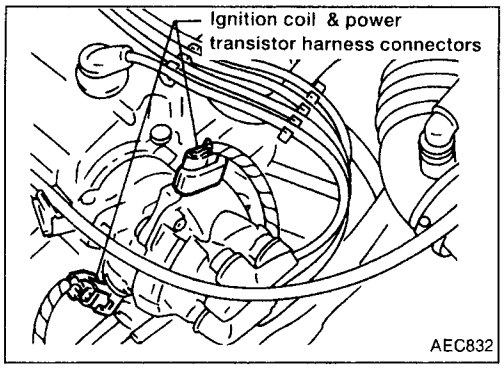

Ignition Signal

COMPONENT DESCRIPTION

Ignition coil & power transistor (Built into distributor)

The ignition coil is built into distributor. The ignition signal from the ECM is sent to the power transistor. The power transistor switches on and off the ignition coil primary circuit. As the primary circuit is turned on and off, the proper high voltage is induced in the coil secondary circuit.

EC

Diagnostic Trouble Code No.	Malfunction is detected when ...	Check Items (Possible Cause)
21	● The ignition signal in the primary circuit is not entered to ECM during engine cranking or running.	● Harness or connectors (The ignition primary circuit is open or shorted.) ● Power transistor unit. ● Resistor ● Camshaft position sensor ● Camshaft position sensor circuit

DIAGNOSTIC TROUBLE CODE CONFIRMATION PROCEDURE

Note: If both DTC 11 and 21 are displayed, perform TROUBLE DIAGNOSIS FOR DTC 11 first. Refer to EC-94.

1) Turn ignition switch "ON".
2) Select "DATA MONITOR" mode with CONSULT.
3) Start engine.

OR

1) Turn ignition switch "ON".
2) Start engine.
3) Turn ignition switch "OFF", wait for at least 5 seconds and then turn "ON".
4) Perform "Diagnostic Test Mode II" (Self-diagnostic results) with ECM.

Simpo PDF Merge and Split Unregistered Version - http://www.simpopdf.com

Ignition Signal (Cont'd)

EC-IGN/SG-01

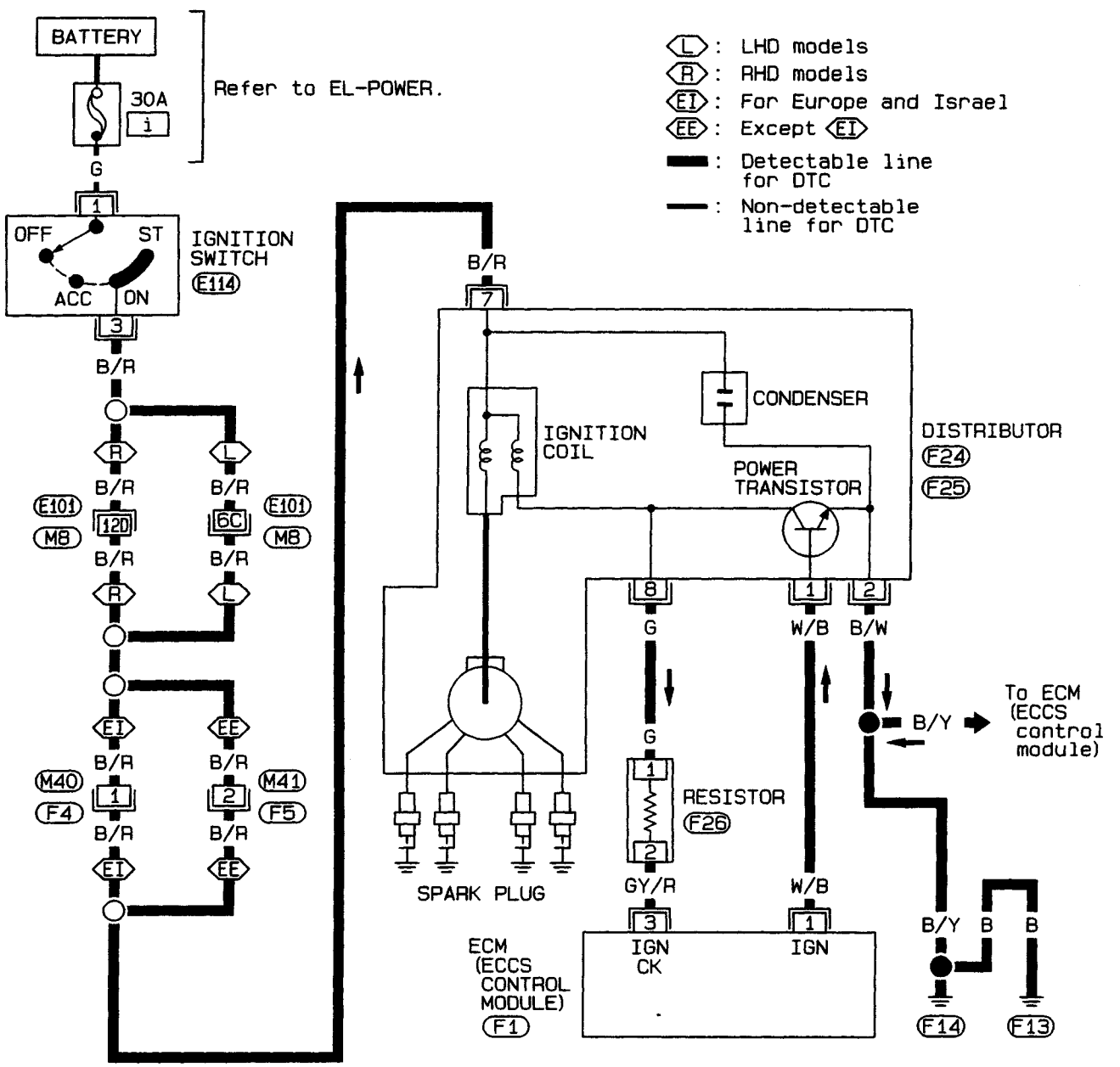

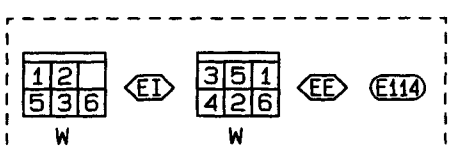

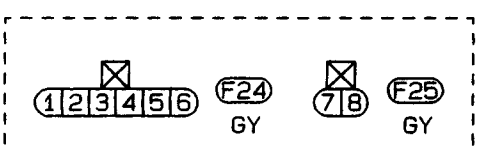

Refer to last page (Foldout page).

M8, E101

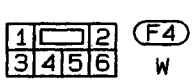

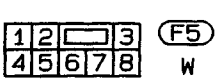

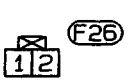

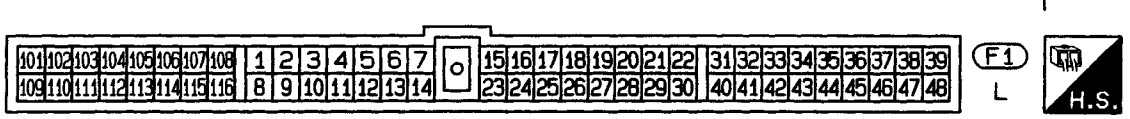

HEC033

Simpo PDF Merge and Split Unregistered Version - http://www.simpopdf.com

Ignition Signal (Cont'd)

GA16DE for Australia

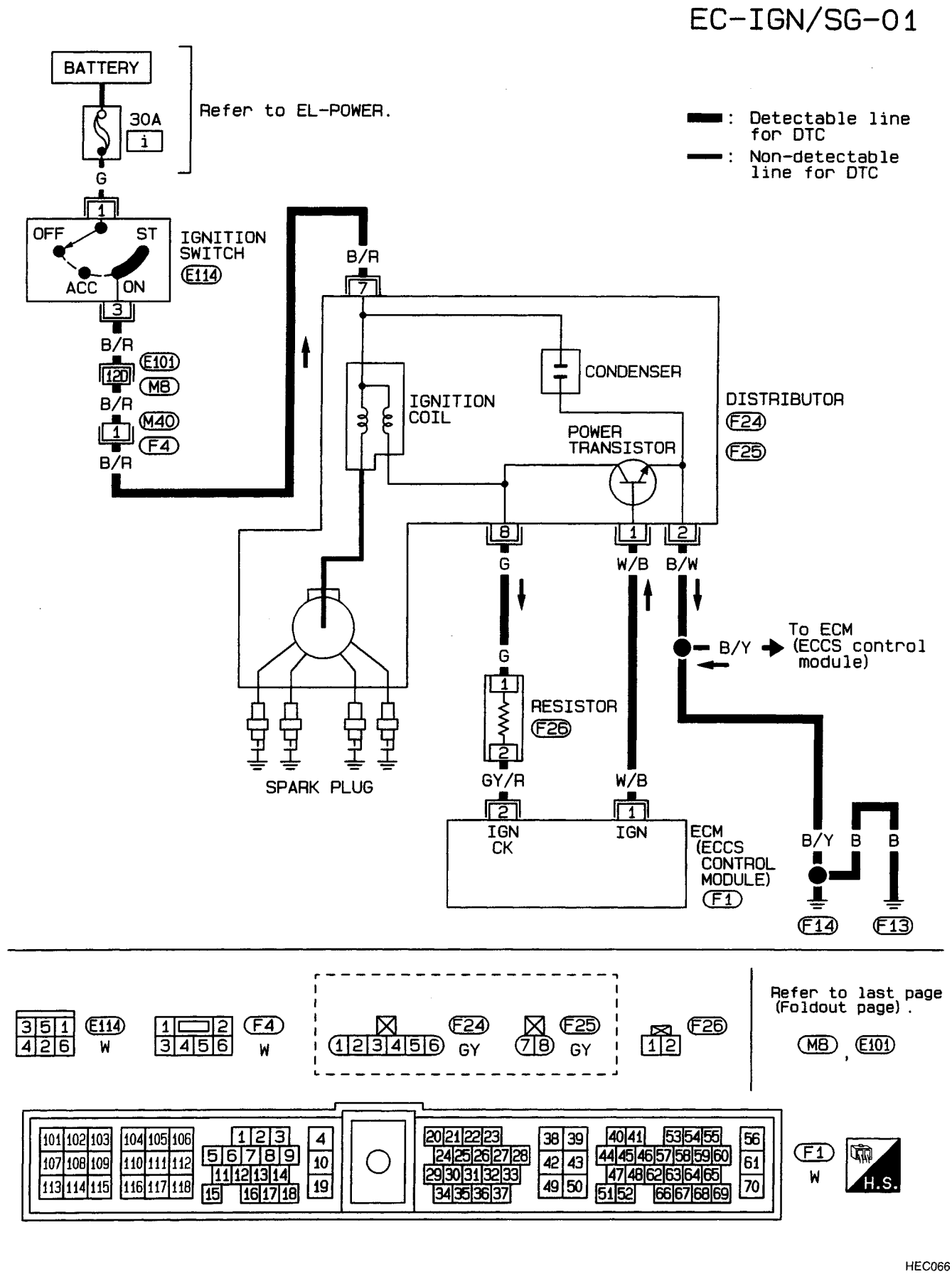

HEC066

Simpo PDF Merge and Split Unregistered Version - http://www.simpopdf.com

Ignition Signal (Cont'd)

DIAGNOSTIC PROCEDURE

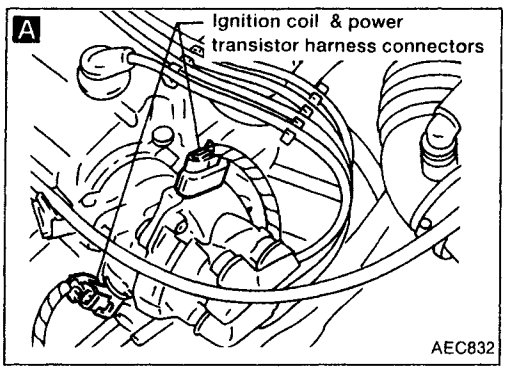

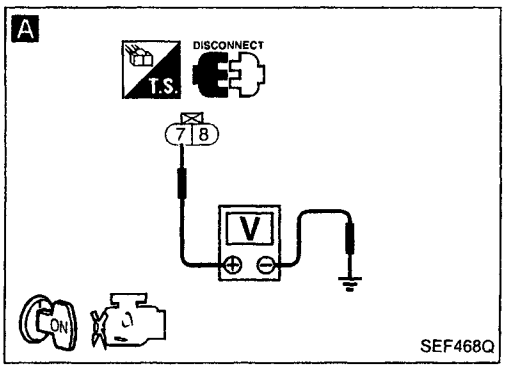

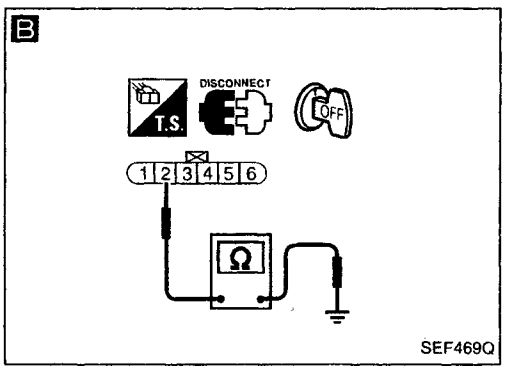

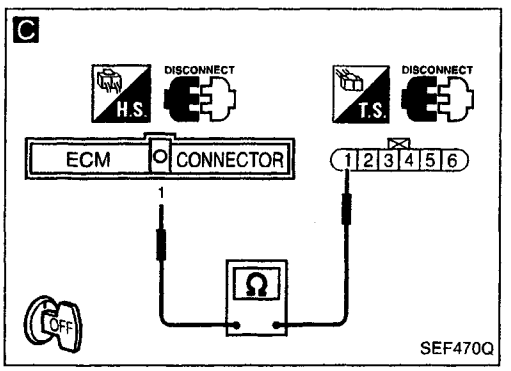

INSPECTION START

Turn ignition switch "OFF", and restart engine.
Is engine running?

Yes → Ⓐ

No

A

CHECK POWER SUPPLY.
1. Turn ignition switch "OFF".
2. Disconnect ignition coil harness connector.
3. Turn ignition switch "ON".
4. Check voltage between terminal ⑦ and ground with CONSULT or tester.
   Voltage: Battery voltage

NG → Check the following.
- Harness connectors (F4), (M40) or (F5), (M41)
- Harness connectors (M8), (E101)
- Harness for open or short between ignition coil and ignition switch

If NG, repair harness or connectors.

OK

B

CHECK GROUND CIRCUIT.
1. Turn ignition switch "OFF".
2. Disconnect power transistor harness connector.
3. Check harness continuity between terminal ② and engine ground.
   Continuity should exist.
   If OK, check harness for short.

NG → Repair harness or connectors.

OK

C

CHECK INPUT SIGNAL CIRCUIT.
1. Disconnect ECM harness connector.
2. Check harness continuity between ECM terminal ① and power transistor terminal ①.
   Continuity should exist.
   If OK, check harness for short.

NG → Repair harness or connectors.

OK

CHECK COMPONENTS (Ignition coil, power transistor).
Refer to "COMPONENT INSPECTION", EC-118.

NG → Replace malfunctioning component(s).

OK

Disconnect and reconnect harness connectors in the circuit. Then retest.

Trouble is not fixed.

Check ECM pin terminals for damage or the connection of ECM harness connector. Reconnect ECM harness connector and retest.

INSPECTION END

Simpo PDF Merge and Split Unregistered Version - http://www.simpopdf.com

Ignition Signal (Cont'd)

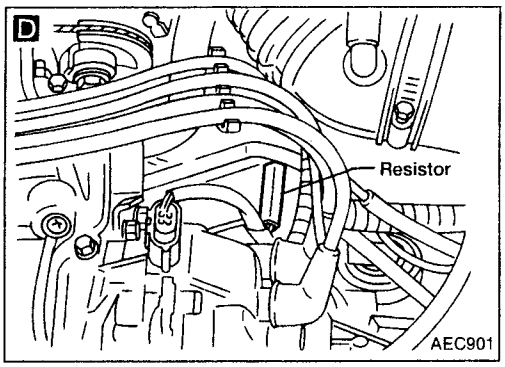

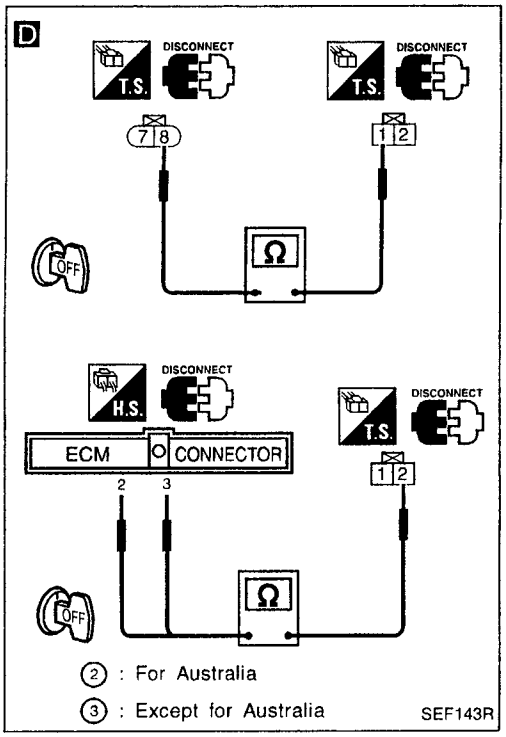

Ⓐ

D

CHECK INPUT SIGNAL CIRCUIT.
1. Stop engine.
2. Disconnect ignition coil harness connector.
3. Strip tape covering resistor and disconnect the connector.
4. Disconnect ECM harness connector.
5. Check harness continuity between ignition coil terminal ⑧ and resistor terminal ①, resistor terminal ② and ECM terminal ③ or ②.
   Continuity should exist.
   If OK, check harness for short.

NG → Repair harness or connectors.

OK ↓

CHECK COMPONENTS (Resistor).
Refer to "COMPONENT INSPECTION" on next page.

NG → Replace resistor.

OK ↓

Disconnect and reconnect harness connectors in the circuit. Then retest.

Trouble is not fixed. ↓

Check ECM pin terminals for damage or the connection of ECM harness connector. Reconnect ECM harness connector and retest.

↓

INSPECTION END

EC

Simpo PDF Merge and Split Unregistered Version - http://www.simpopdf.com

Ignition Signal (Cont'd)

COMPONENT INSPECTION

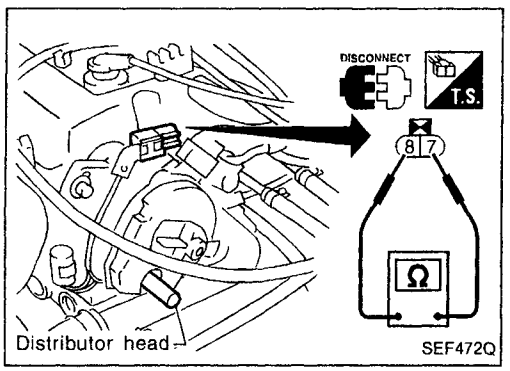

Ignition coil

1. Disconnect ignition coil harness connector.
2. Check resistance as shown in the figure.

Terminal	Resistance [at 25°C (77°F)]
⑦ - ⑧ (Primary coil)	Approximately 1 Ω
⑦ - secondary terminal on distributor head (Secondary coil)	Approximately 10 kΩ

If NG, replace ignition coil.

3. For checking secondary coil, remove distributor cap.
4. Check resistance between ignition coil harness connector terminal ⑦ and the secondary terminal on the distributor head.
   If NG, replace distributor.

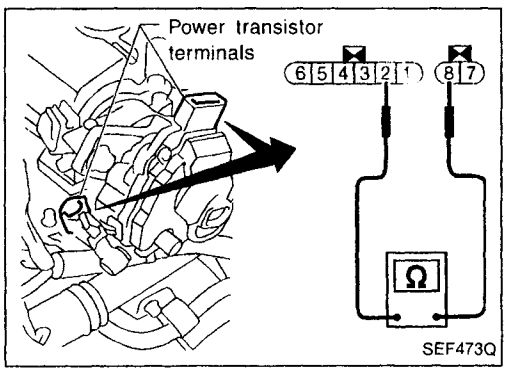

Power transistor

1. Disconnect power transistor harness connector.
2. Check power transistor resistance between terminals ② and ⑧ .

Terminals	Resistance	Result
② and ⑧	Not 0Ω	OK
	0Ω	NG

If NG, replace distributor.

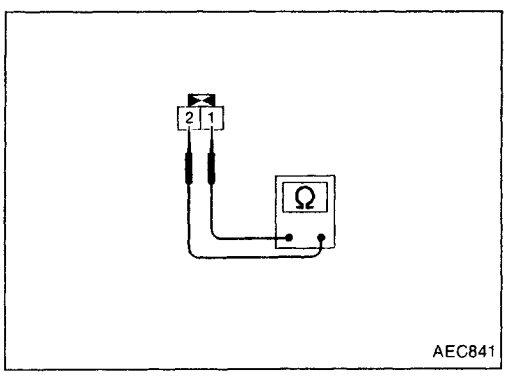

Resistor

1. Disconnect resistor harness connector.
2. Check resistance between terminals ① and ② .
   Resistance: Approximately 2.2 kΩ [at 25°C (77°F)]
   If NG, replace resistor.

Simpo PDF Merge and Split Unregistered Version - http://www.simpopdf.com

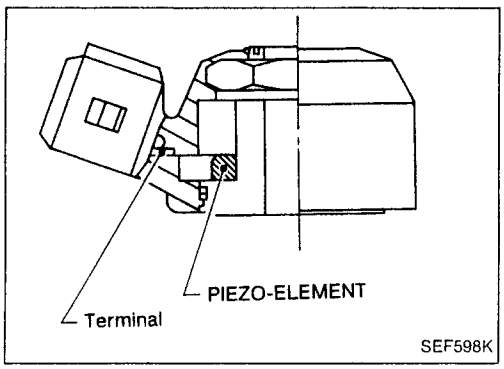

Knock Sensor (KS)

The knock sensor is attached to the cylinder block. It senses engine knocking using a piezoelectric element. A knocking vibration from the cylinder block is sensed as vibrational pressure. This pressure is converted into a voltage signal and sent to the ECM.

EC

Diagnostic Trouble Code No.	Malfunction is detected when	Check Items (Possible Cause)
34	• An excessively low or high voltage from the knock sensor is entered to ECM.	• Harness or connectors (The knock sensor circuit is open or shorted.) • Knock sensor

DIAGNOSTIC TROUBLE CODE CONFIRMATION PROCEDURE

1) Turn ignition switch "ON" and select "DATA MONITOR" mode with CONSULT.
2) Start engine and run it for at least 5 seconds at idle speed.

OR

1) Start engine and run it for at least 5 seconds at idle speed.
2) Turn ignition switch "OFF", wait for at least 5 seconds and then turn "ON".
3) Perform "Diagnostic Test Mode II" (Self-diagnostic results) with ECM.

Simpo PDF Merge and Split Unregistered Version - http://www.simpopdf.com

Knock Sensor (KS) (Cont'd)

Except for Europe and Israel

EC-KS-01

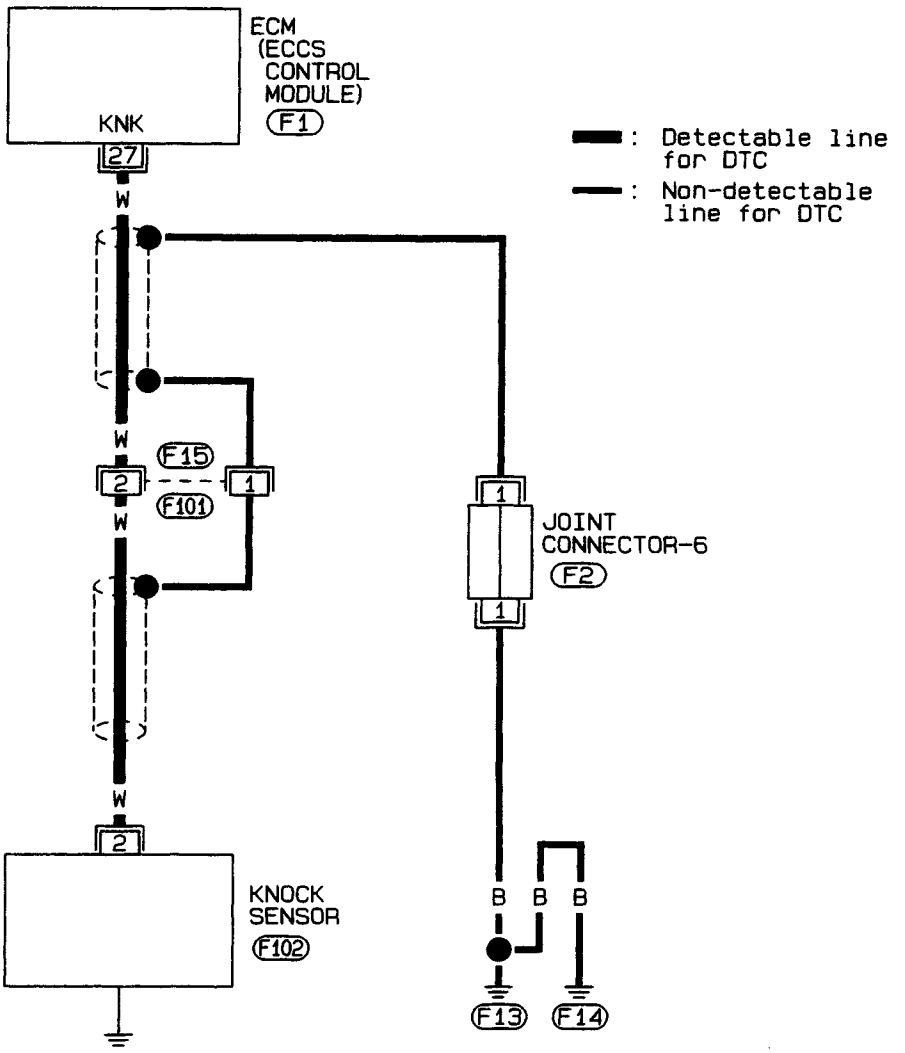

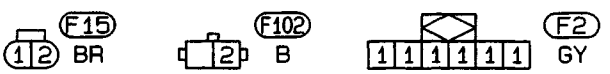

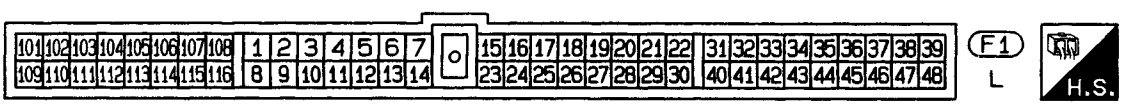

HEC034

Simpo PDF Merge and Split Unregistered Version - http://www.simpopdf.com

Knock Sensor (KS) (Cont'd)

GA16DE for Australia

EC-KS-01

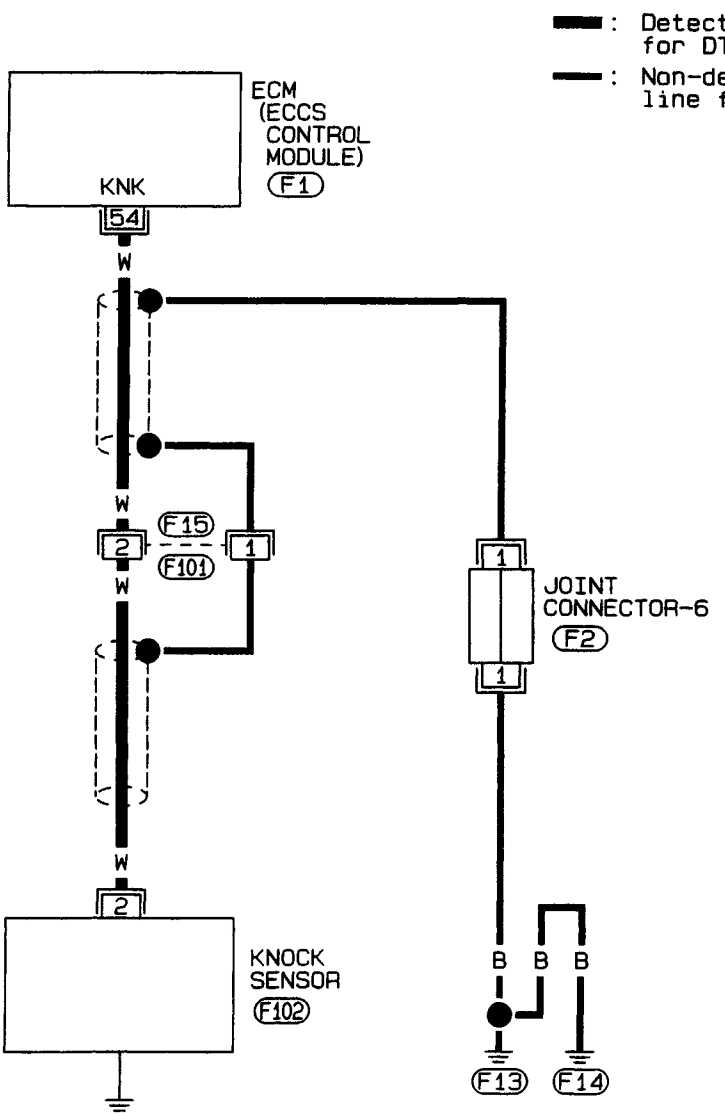

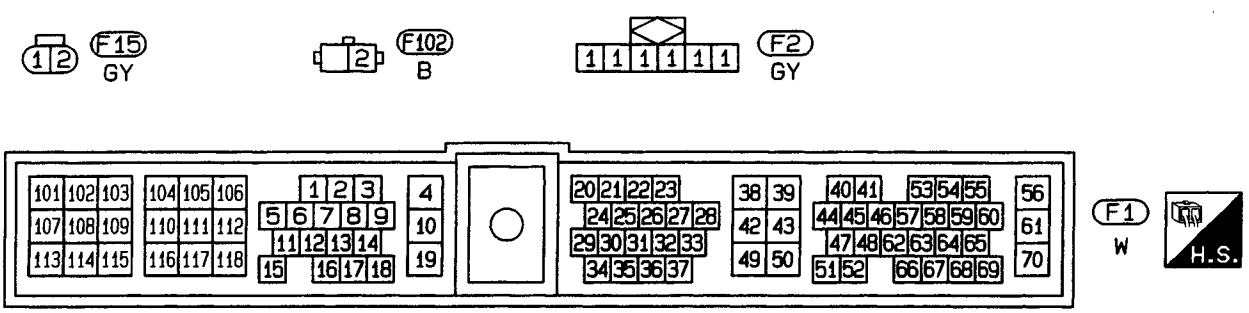

HEC067

Simpo PDF Merge and Split Unregistered Version - http://www.simpopdf.com

Knock Sensor (KS) (Cont'd)

DIAGNOSTIC PROCEDURE

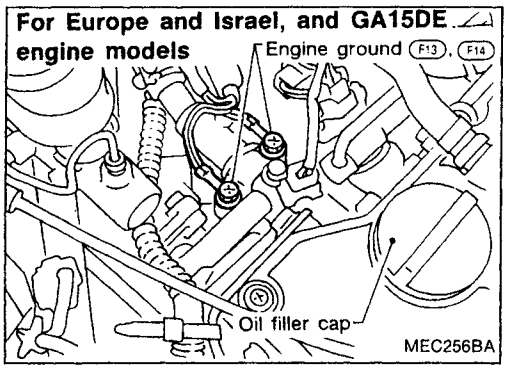

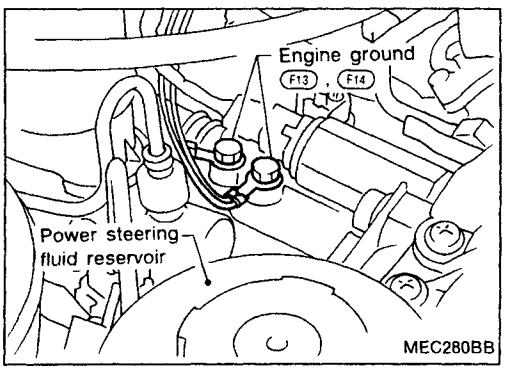

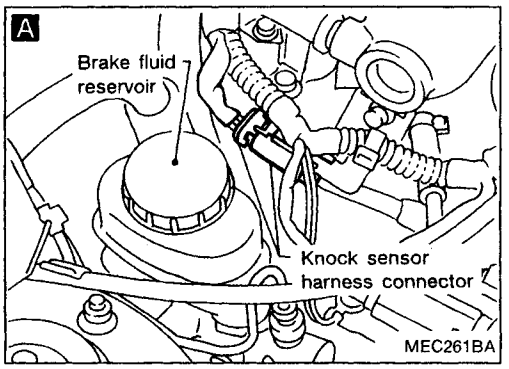

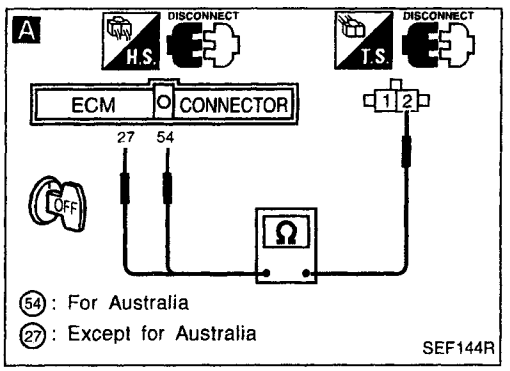

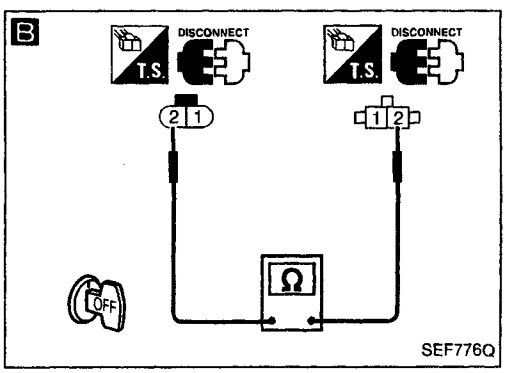

INSPECTION START

↓

Loosen and retighten engine ground screws.

↓

A

CHECK INPUT SIGNAL CIRCUIT.
1. Turn ignition switch "OFF".
2. Disconnect ECM harness connector and knock sensor sub-harness connector.
3. Check harness continuity between terminal ② and ECM terminal ㉗ or ㊹.

Continuity should exist.
If OK, check harness for short.

NG → Repair harness or connectors.

OK ↓

B

CHECK SUB-HARNESS CIRCUIT.
1. Disconnect knock sensor harness connector.
2. Check harness continuity between knock sensor harness connector terminal ② and knock sensor sub-harness connector terminal ②.

Continuity should exist.
If OK, check harness for short.

NG → Check the following.
- Harness connectors F15, F101

If NG, repair harness or connectors.

OK ↓

CHECK COMPONENT (Knock sensor).
Refer to "COMPONENT INSPECTION" on next page.

NG → Replace knock sensor.

OK ↓

Disconnect and reconnect harness connectors in the circuit. Then retest.

Trouble is not fixed. ↓

Check ECM pin terminals for damage or the connection of ECM harness connector. Reconnect ECM harness connector and retest.

↓

INSPECTION END

Simpo PDF Merge and Split Unregistered Version - http://www.simpopdf.com

Knock Sensor (KS) (Cont'd)

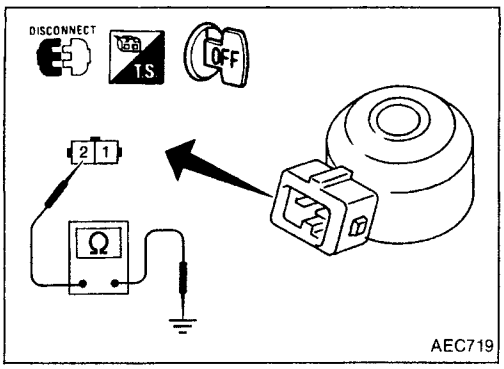

COMPONENT INSPECTION

Knock sensor

- Use an ohmmeter which can measure more than 10 MΩ.

1. Disconnect knock sensor harness connector.
2. Check resistance between terminal ② and ground.

Resistance: 500 - 620 kΩ [at 25°C (77°F)]

CAUTION:

Discard any knock sensor which has been dropped or undergone shocks; use a new one.

EC

Simpo PDF Merge and Split Unregistered Version - http://www.simpopdf.com

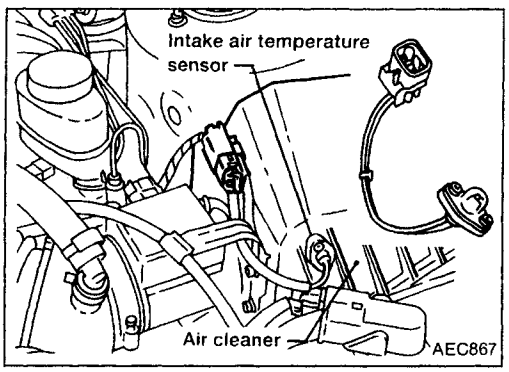

Intake Air Temperature Sensor (IATS)

The intake air temperature sensor mounted to the air cleaner housing, detects intake air temperature and transmits a signal to the ECM.

The temperature sensing unit uses a thermistor which is sensitive to the change in temperature. Electrical resistance of the thermistor decreases in response to the temperature rise.

This sensor is not directly used to control the engine system. It is used only for the on-board diagnosis.

Diagnostic Trouble Code No.	Malfunction is detected when ...	Check Items (Possible Cause)
41	a) An excessively low or high voltage from the sensor is entered to ECM. ..... b) Voltage sent to ECM is not practical when compared with the engine coolant temperature sensor signal.	• Harness or connectors (The sensor circuit is open or shorted.) • Intake air temperature sensor.

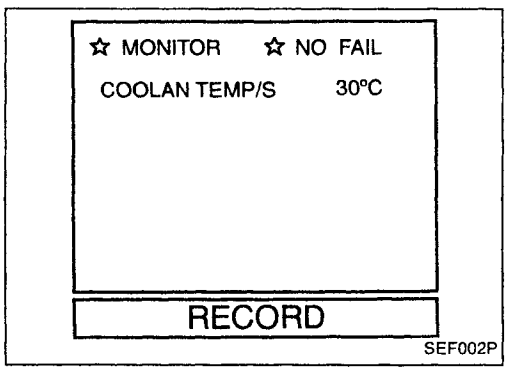

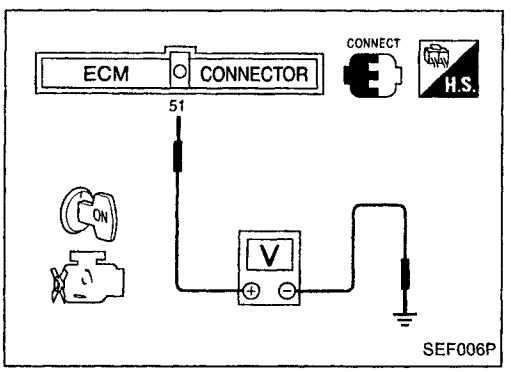

DIAGNOSTIC TROUBLE CODE CONFIRMATION PROCEDURE

For the malfunction a) and b)

1) Wait until engine coolant temperature is less than 90°C (194°F).
   (a) Turn ignition switch "ON".
   (b) Select "DATA MONITOR" mode with CONSULT.
   (c) Check the engine coolant temperature.
   (d) If the engine coolant temperature is not less than 90°C (194°F), turn ignition switch "OFF" and cool down engine.
2) Turn ignition switch "ON".
3) Select "DATA MONITOR" mode with CONSULT.
4) Wait for at least 5 seconds.

OR

1) Wait until engine coolant temperature is less than 90°C (194°F).
   (a) Turn ignition switch "ON".
   (b) Check voltage between ECM terminal 51 and ground.
   Voltage: More than 1.2 (V)
   (c) If the voltage is not more than 1.2V, turn ignition switch "OFF" and cool down engine.
2) Turn ignition switch "ON" wait for at least 5 seconds.
3) Turn ignition switch "OFF", wait for at least 3 seconds and then turn "ON".
4) Perform "Diagnostic Test Mode II" (Self-diagnostic results) with ECM.

Simpo PDF Merge and Split Unregistered Version - http://www.simpopdf.com

EC-IATS-01

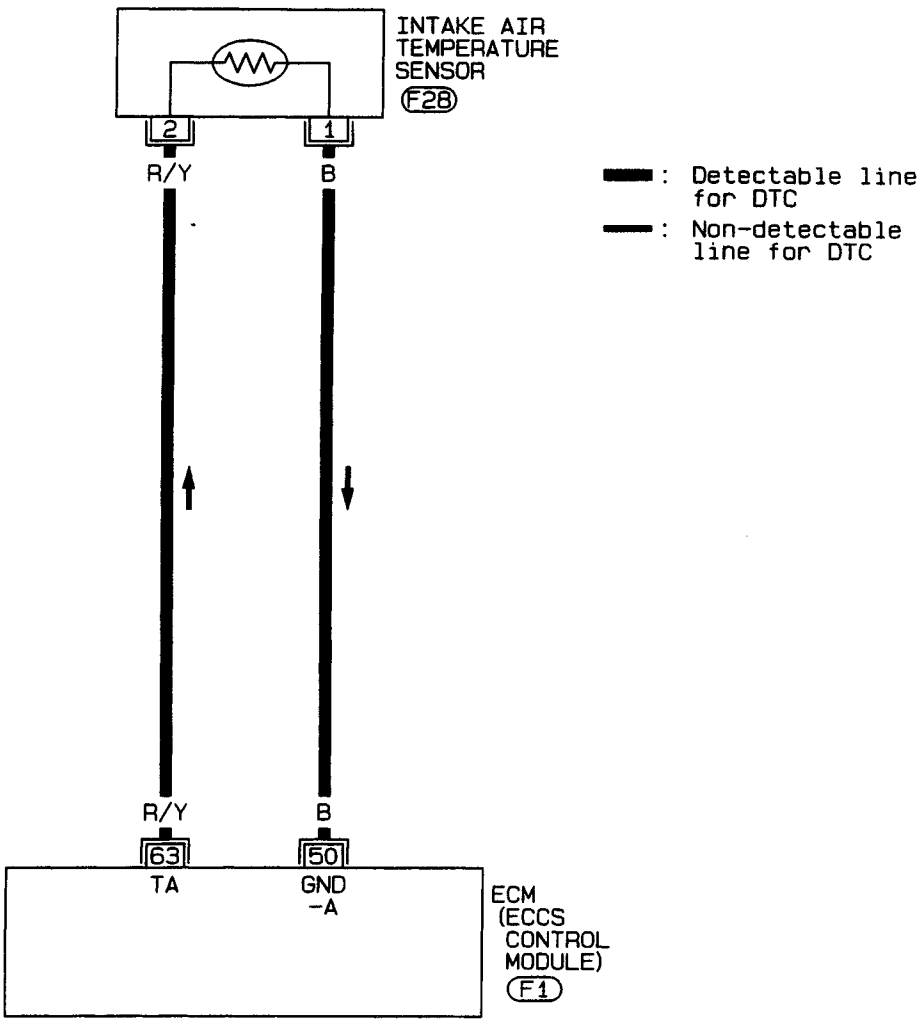

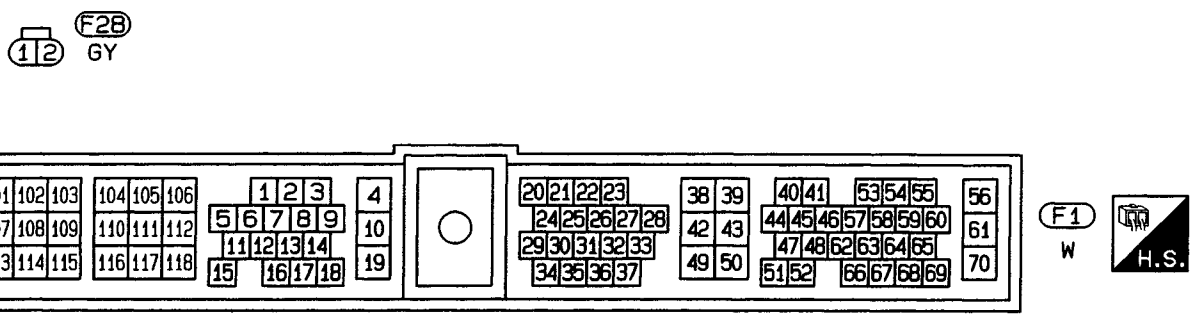

HEC073

Simpo PDF Merge and Split Unregistered Version - http://www.simpopdf.com

Intake Air Temperature Sensor (IATS) (Cont'd)

DIAGNOSTIC PROCEDURE

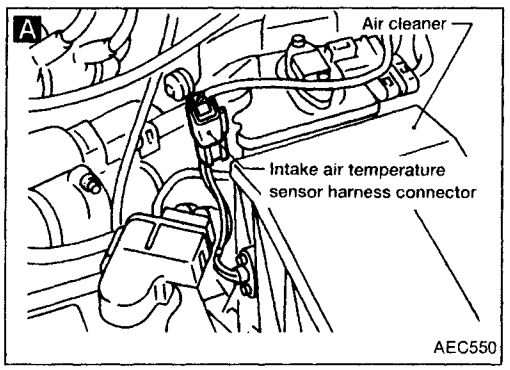

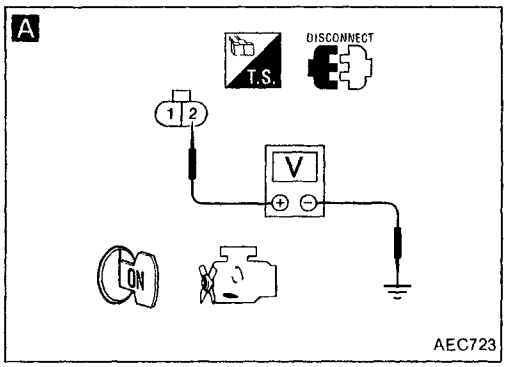

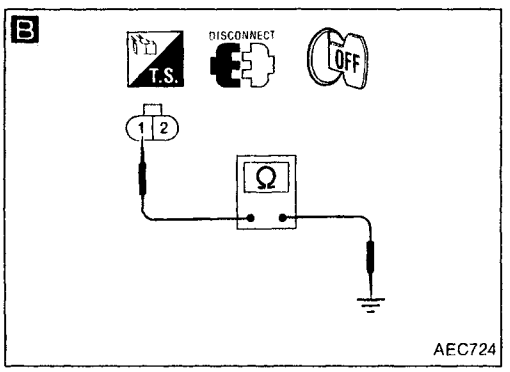

INSPECTION START

A

CHECK POWER SUPPLY.
1. Turn ignition switch "OFF".
2. Disconnect intake air temperature sensor harness connector.
3. Turn ignition switch "ON".
4. Check voltage between terminal ② and ground.
   Voltage:
   Approximately 5V

NG → Check the following.
- Harness continuity between ECM and intake air temperature sensor

If NG, repair harness or connectors.

OK ↓

B

CHECK GROUND CIRCUIT.
1. Turn ignition switch "OFF".
2. Check harness continuity between terminal ① and engine ground.
   Continuity should exist.

NG → Check the following.
- Harness continuity between ECM and intake air temperature sensor

If NG, repair harness or connectors

OK ↓

CHECK COMPONENT (Intake air temperature sensor). Refer to "COMPONENT INSPECTION" on next page.

NG → Replace intake air temperature sensor.

OK ↓

Disconnect and reconnect harness connectors in the circuit. Then retest.

Trouble is not fixed. ↓

Check ECM pin terminals for damage or the connection of ECM harness connector.
Reconnect ECM harness connector and retest.

INSPECTION END

Simpo PDF Merge and Split Unregistered Version - http://www.simpopdf.com

Intake Air Temperature Sensor (IATS) (Cont'd)

COMPONENT INSPECTION

Intake air temperature sensor

Check resistance as shown in the figure.

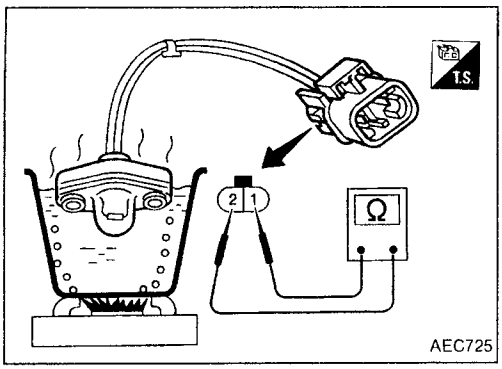

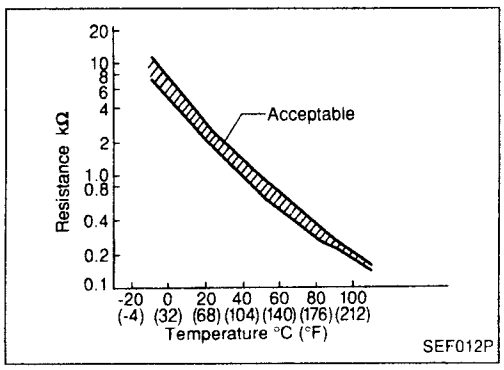

Intake air temperature °C (°F)	Resistance kΩ
20 (68)	2.1 - 2.9
50 (122)	0.68 - 1.0

EC

Simpo PDF Merge and Split Unregistered Version - http://www.simpopdf.com

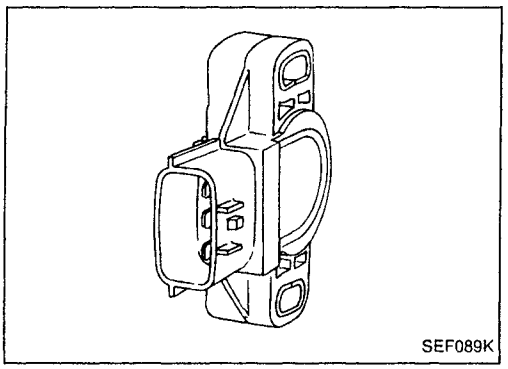
SEF089K

Throttle Position Sensor

The throttle position sensor responds to the accelerator pedal movement. This sensor is a kind of potentiometer which transforms the throttle position into output voltage, and emits the voltage signal to the ECM. In addition, the sensor detects the opening and closing speed of the throttle valve and feeds the voltage signal to the ECM.

Idle position of the throttle valve is determined by the ECM receiving the signal from the throttle position sensor. This one controls engine operation such as fuel cut.

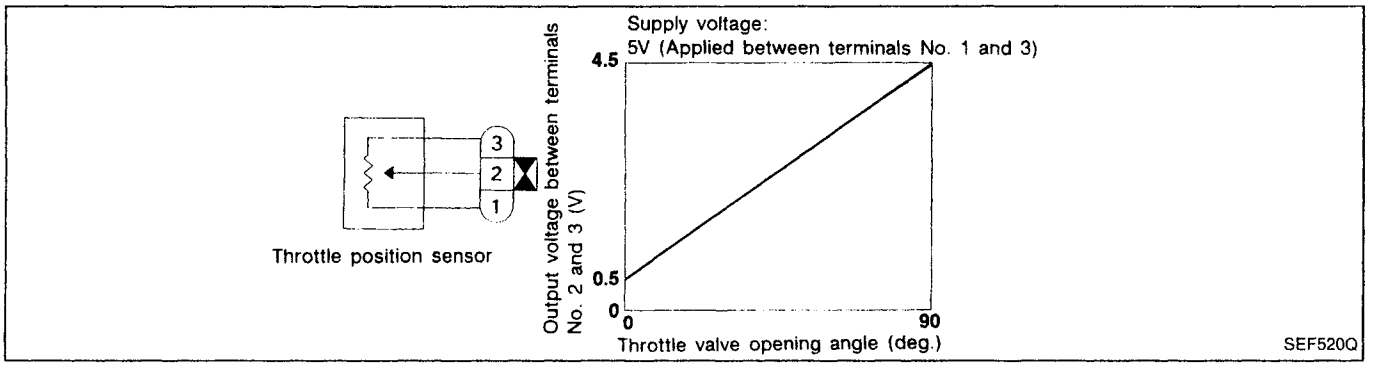

SEF520Q

Simpo PDF Merge and Split Unregistered Version - http://www.simpopdf.com

Throttle Position Sensor (Cont'd)

EC-TPS-01

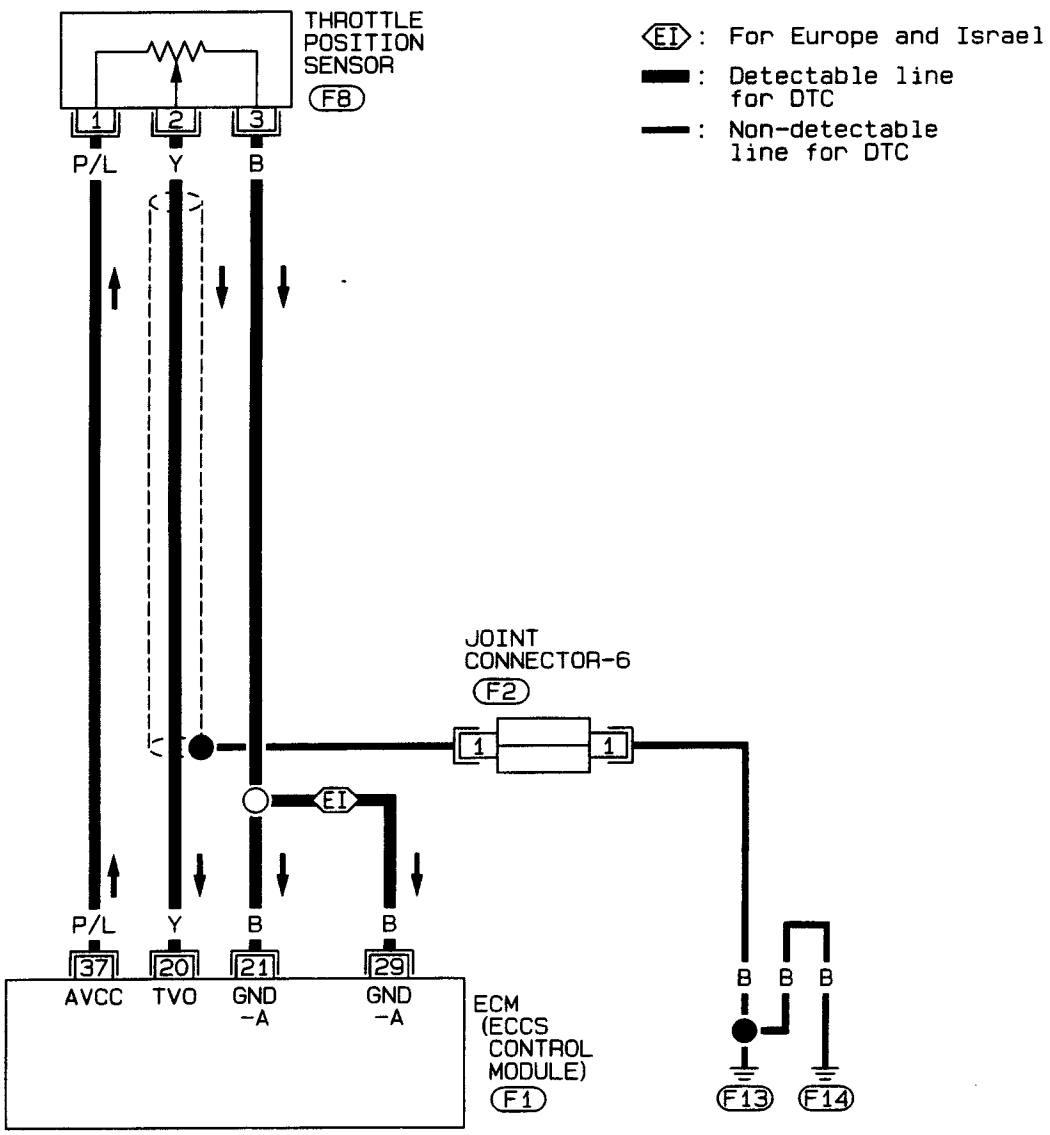

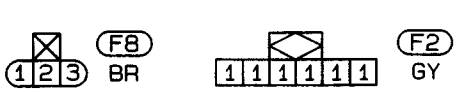

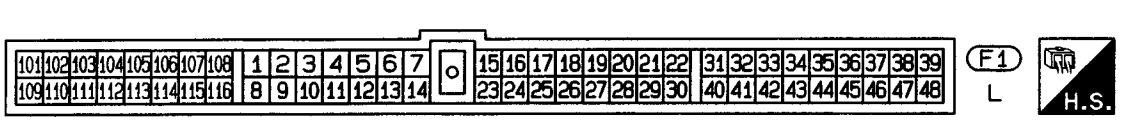

HEC035

Simpo PDF Merge and Split Unregistered Version - http://www.simpopdf.com

Throttle Position Sensor (Cont'd)

GA16DE for Australia

EC-TPS-01

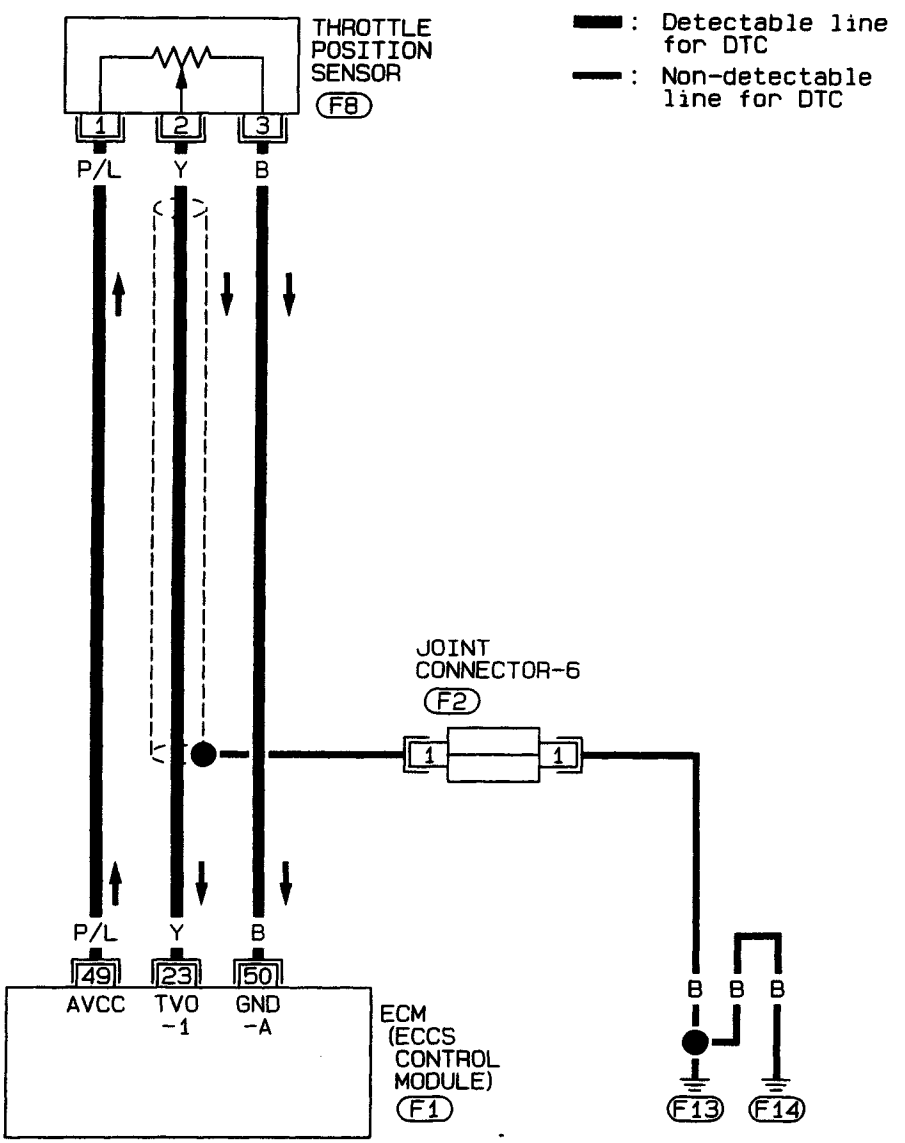

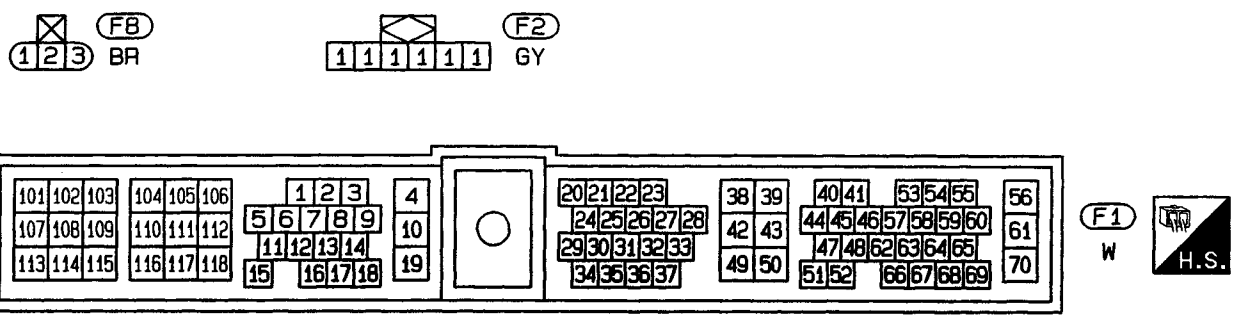

HEC068

Simpo PDF Merge and Split Unregistered Version - http://www.simpopdf.com

Throttle Position Sensor (Cont'd)

DIAGNOSTIC PROCEDURE

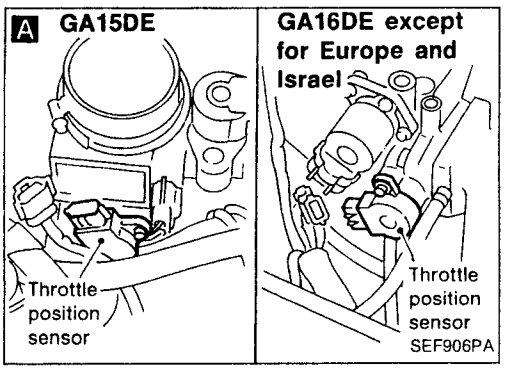

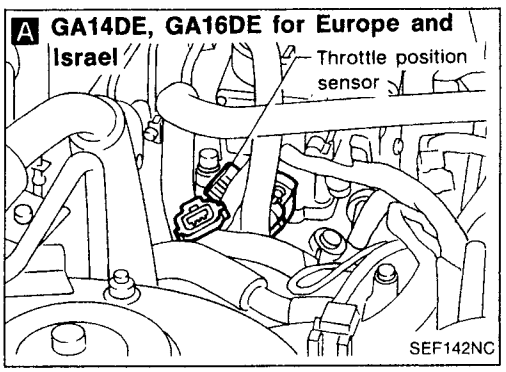

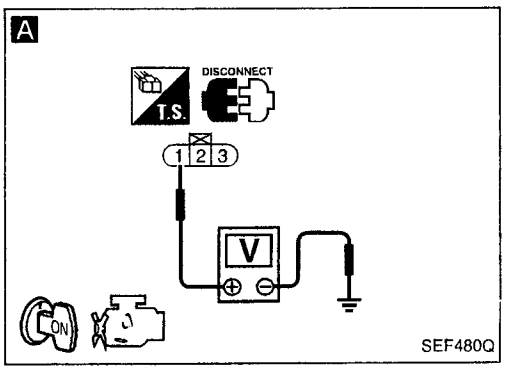

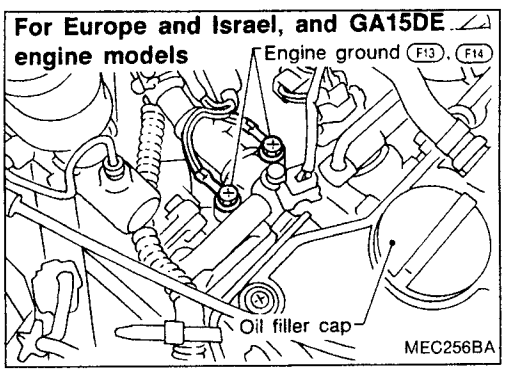

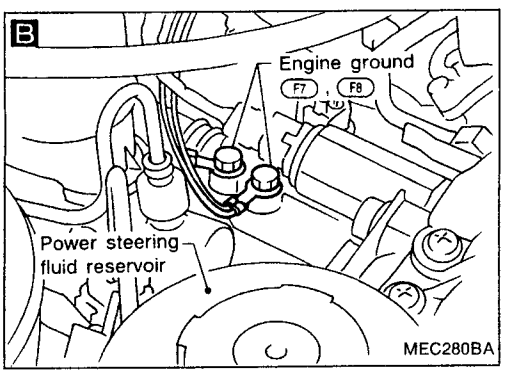

INSPECTION START

A

CHECK POWER SUPPLY.
1. Turn ignition switch "OFF".
2. Disconnect throttle position sensor harness connector.
3. Turn ignition switch "ON".
4. Check voltage between terminal ① and ground with CONSULT or tester.
Voltage: Approximately 5V

NG → Repair harness or connectors.

OK

B

CHECK GROUND CIRCUIT.
1. Turn ignition switch "OFF".
2. Loosen and retighten engine ground screw.
3. Check harness continuity between terminal ③ and engine ground.
Continuity should exist.
If OK, check harness for short.

NG → Check the following.
- Harness for open or short between ECM and throttle position sensor

If NG, repair harness or connectors.

OK

C

CHECK INPUT SIGNAL CIRCUIT.
1. Disconnect ECM harness connector.
2. Check harness continuity between ECM terminal ⑳ or ㉓ and terminal ②.
Continuity should exist.
If OK, check harness for short.

NG → Repair harness or connectors.

OK

ADJUST THROTTLE POSITION SENSOR.
Perform "Basic Inspection", EC-65.

CHECK COMPONENT
(Throttle position sensor).
Refer to "COMPONENT INSPECTION" on next page.

NG → Replace throttle position sensor. To adjust it, perform "Basic Inspection", EC-65.

OK

Disconnect and reconnect harness connectors in the circuit. Then retest.

Trouble is not fixed.

Check ECM pin terminals for damage or the connection of ECM harness connector. Reconnect ECM harness connector and retest.

INSPECTION END

EC

Simpo PDF Merge and Split Unregistered Version - http://www.simpopdf.com

Throttle Position Sensor (Cont'd)

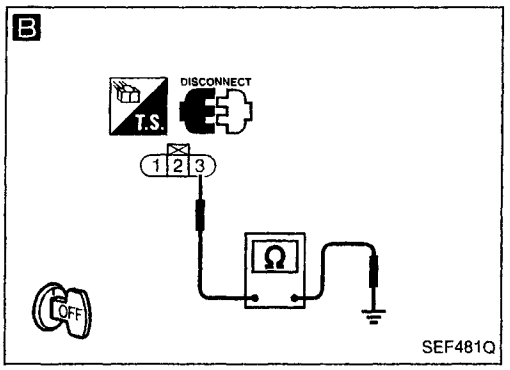

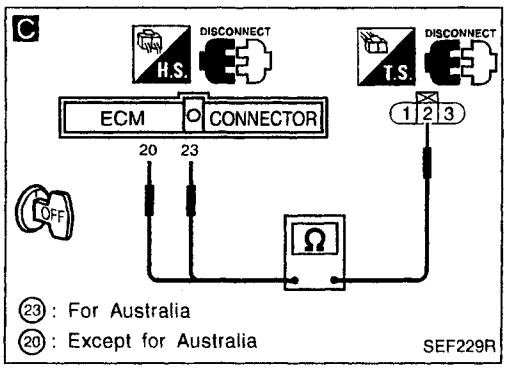

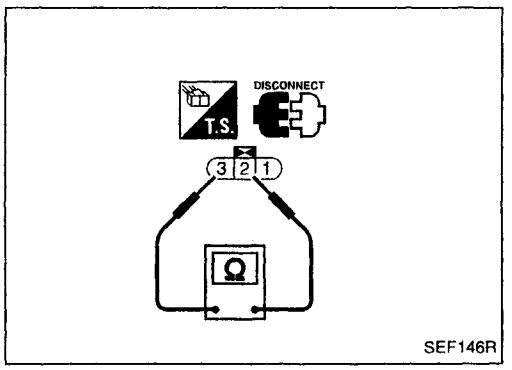

COMPONENT INSPECTION

Throttle position sensor

1. Disconnect throttle position sensor harness connector.
2. Make sure that resistance between terminals ② and ③ changes when opening throttle valve manually.

Throttle valve conditions	Resistance [at 25°C (77°F)]
Completely closed	Approximately 0.5 kΩ
Partially open	0.5 - 4.0 kΩ
Completely open	Approximately 4.0 kΩ

If NG, replace throttle position sensor. To adjust it, perform "Basic Inspection", EC-65.

Simpo PDF Merge and Split Unregistered Version - http://www.simpopdf.com

Vehicle Speed Sensor (VSS)

LHD models

EC-VSS-01

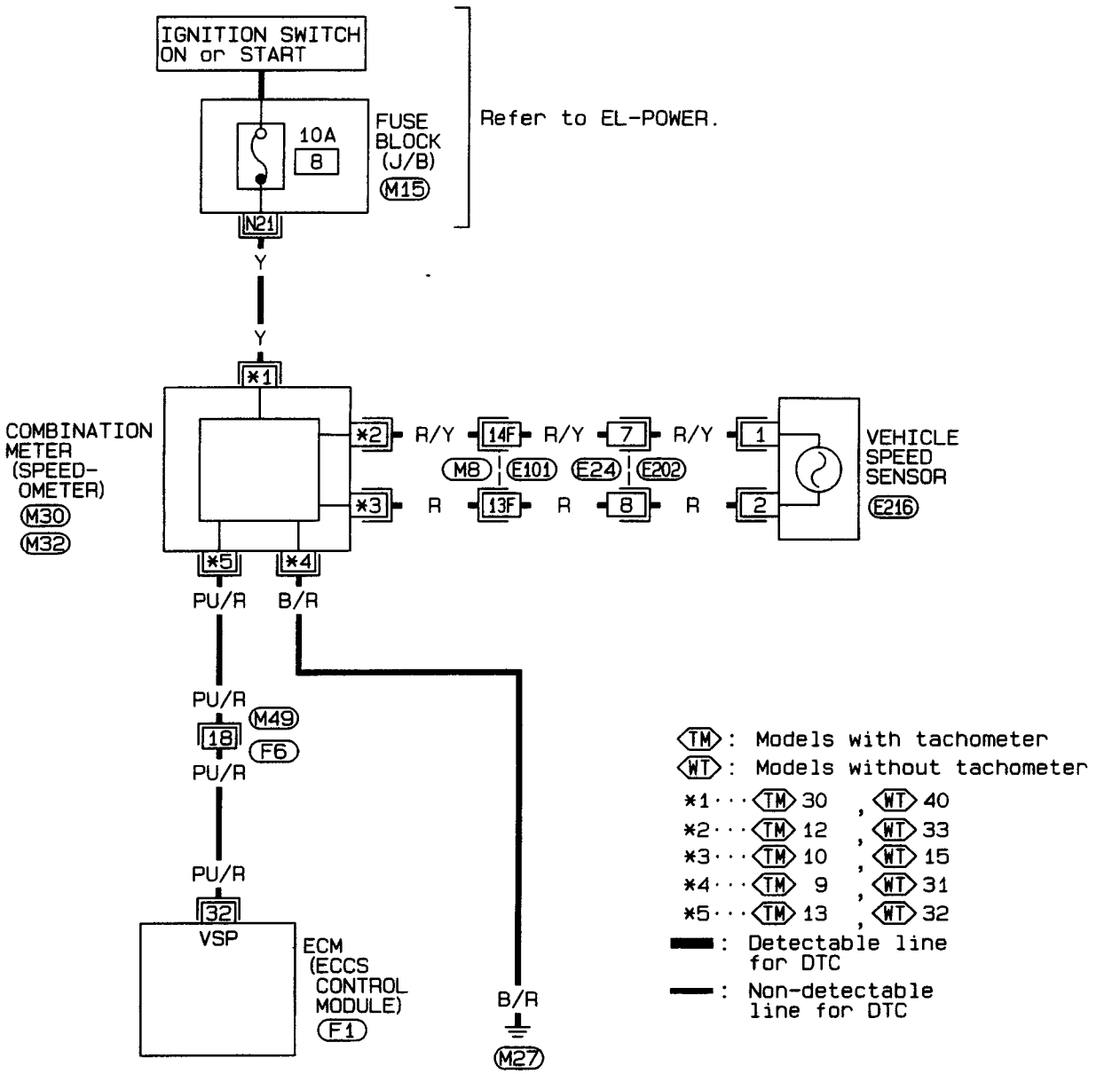

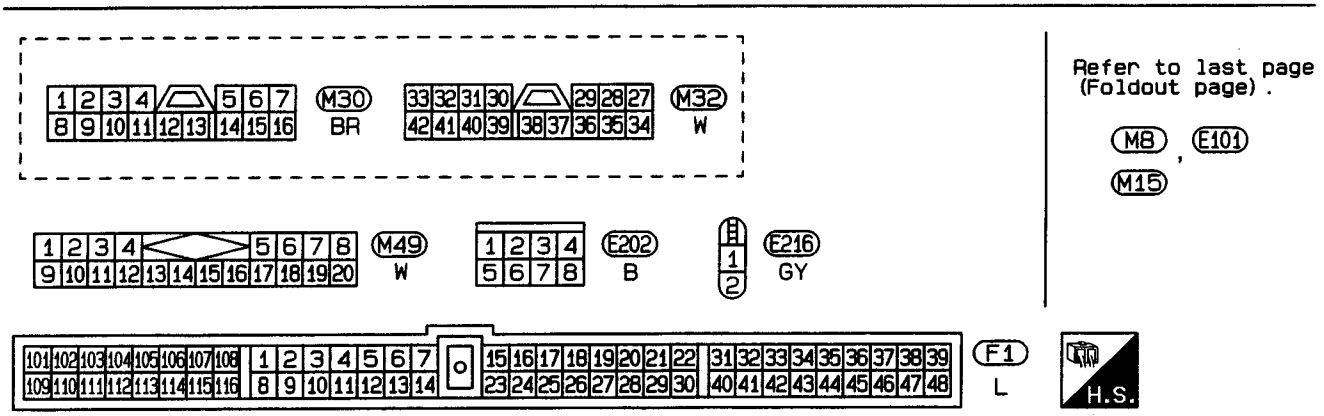

Refer to last page (Foldout page).

M8 , E101

M15

HEC036

Simpo PDF Merge and Split Unregistered Version - http://www.simpopdf.com

Vehicle Speed Sensor (VSS) (Cont'd)

RHD models

EC-VSS-02

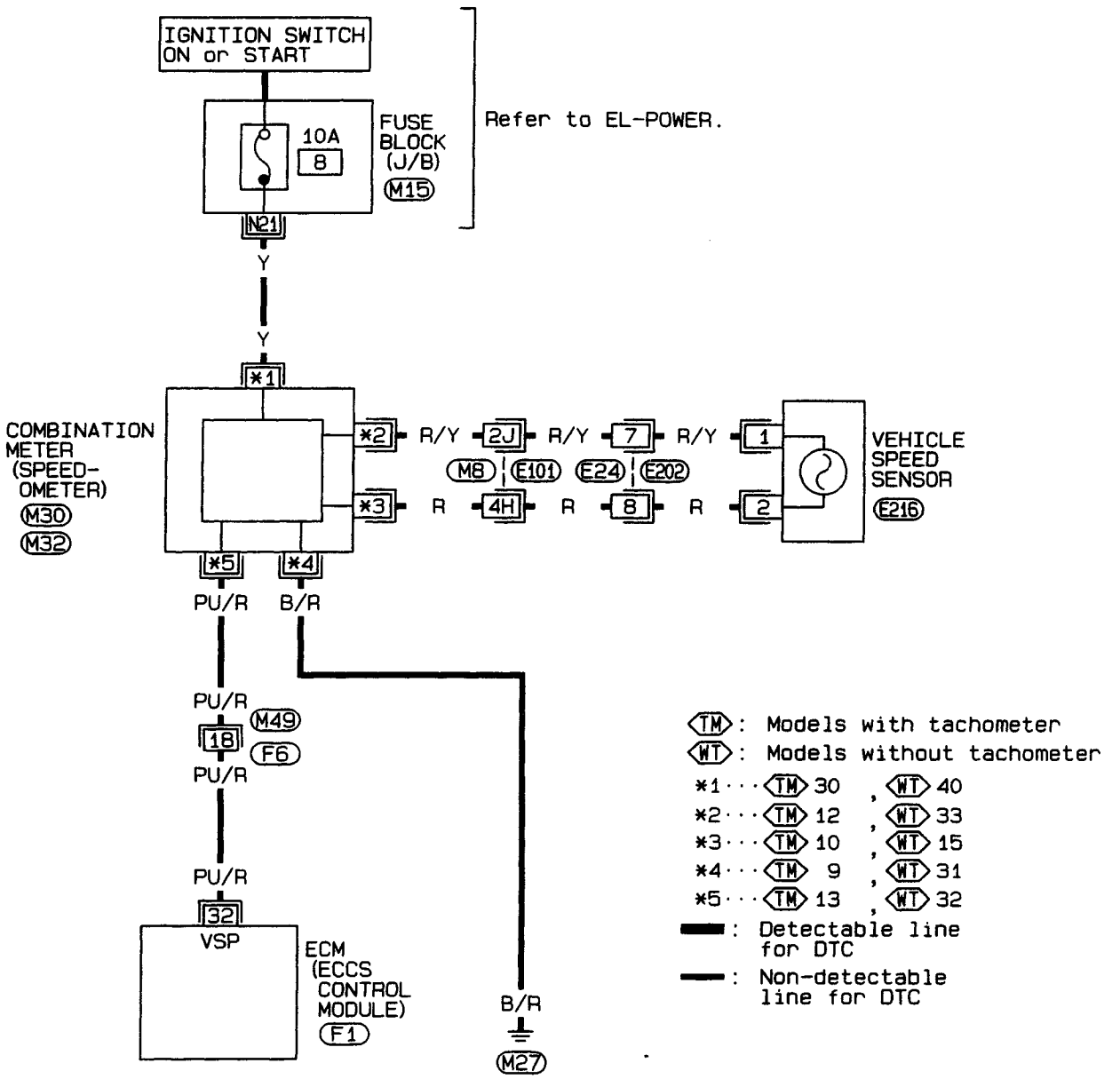

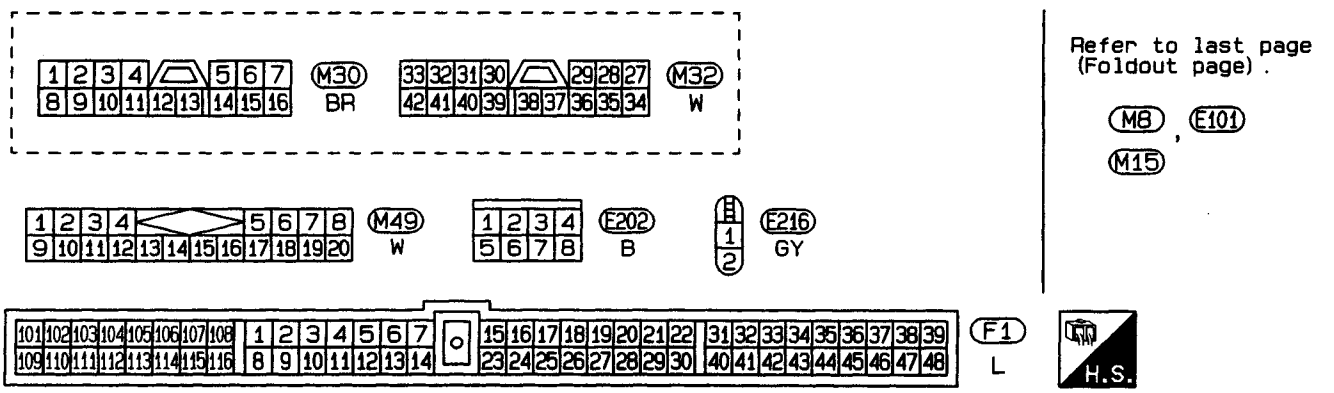

Refer to last page (Foldout page).
M8 E101 M15

HEC037

Simpo PDF Merge and Split Unregistered Version - http://www.simpopdf.com

Vehicle Speed Sensor (VSS) (Cont'd)

GA16DE for Australia

EC-VSS-01

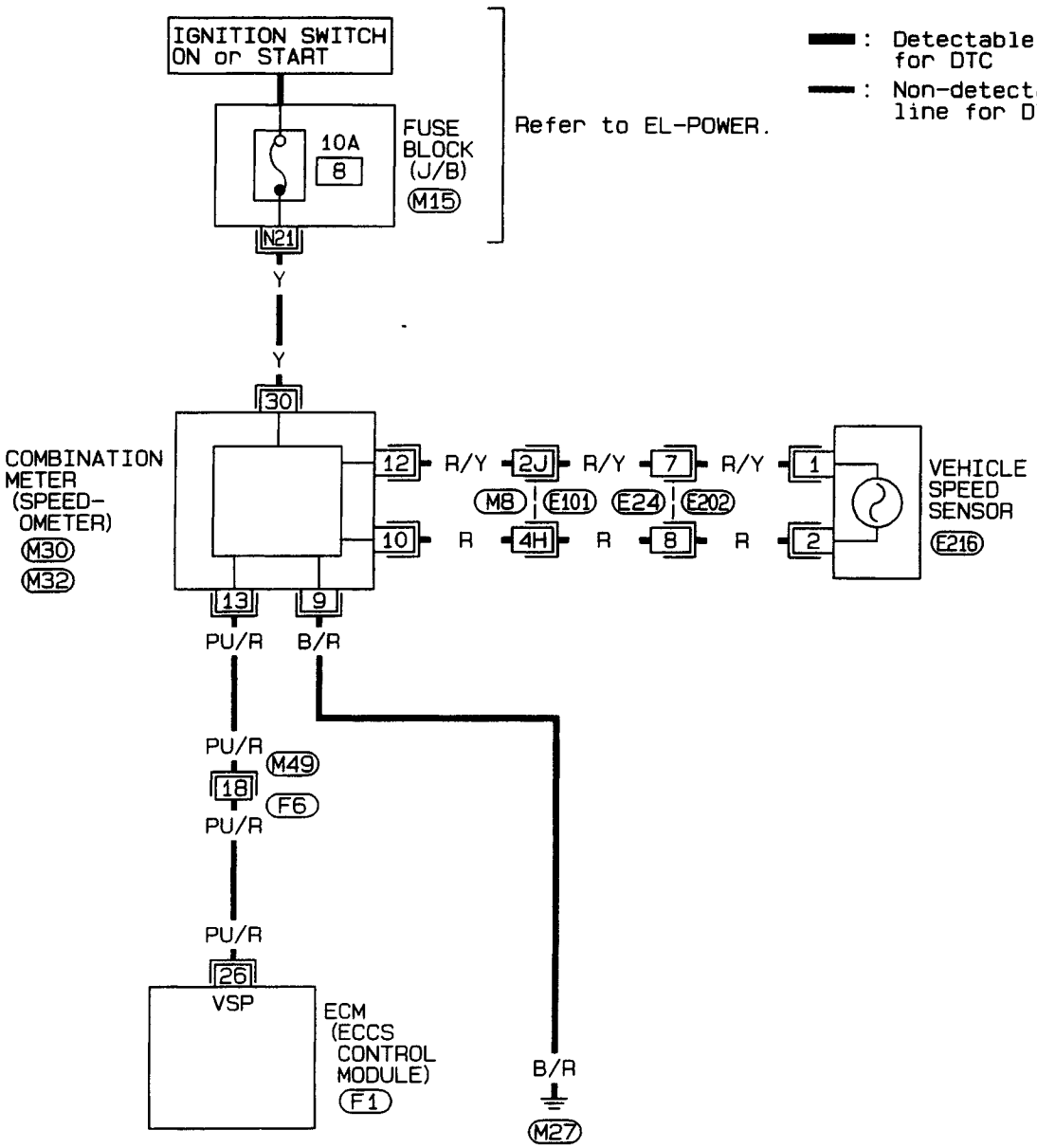

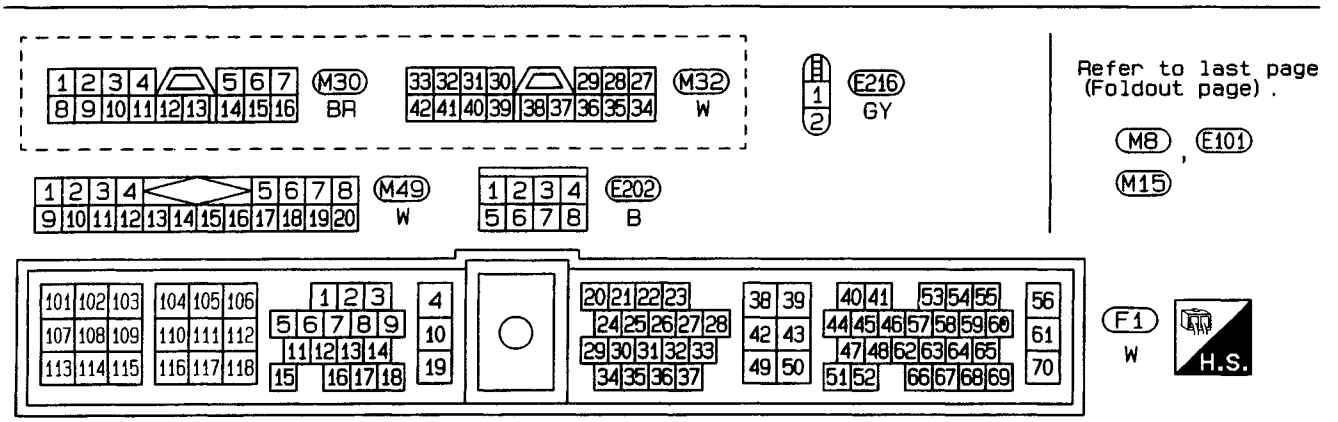

HEC069

Simpo PDF Merge and Split Unregistered Version - http://www.simpopdf.com

Vehicle Speed Sensor (VSS) (Cont'd)

The vehicle speed sensor is installed in the transaxle. It contains a pulse generator which provides a vehicle speed signal to the speedometer. The speedometer then sends a signal to the ECM.

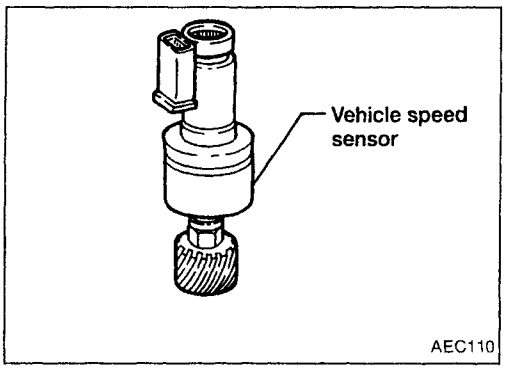

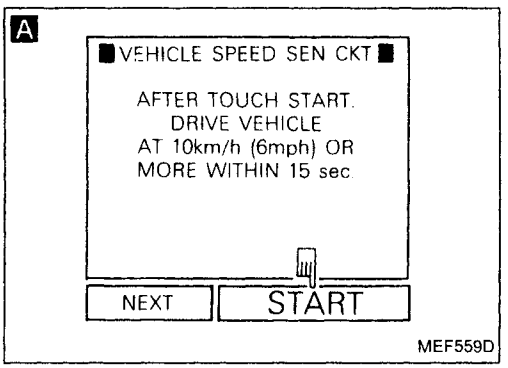

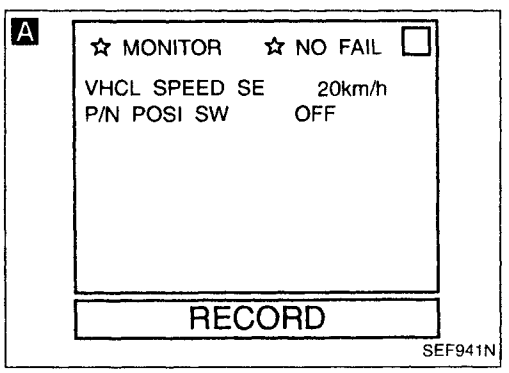

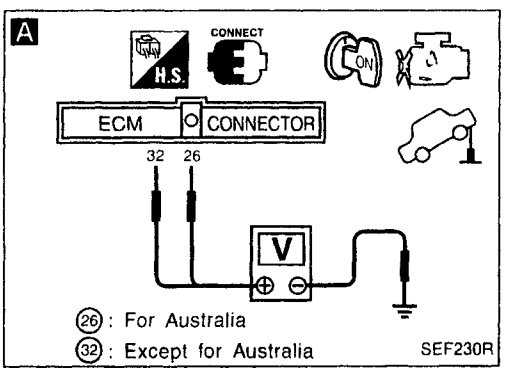

DIAGNOSTIC PROCEDURE

INSPECTION START

A

CHECK OVERALL FUNCTION.
1. Jack up drive wheels.
2. Perform "CAR SPEED SEN CIRCUIT" or "VEHICLE SPEED SEN CKT" in "FUNCTION TEST" mode with CONSULT.

OK → INSPECTION END

OR

2. Read "CAR SPEED SEN" or "VHCL SPEED SE" signal in "DATA MONITOR" mode with CONSULT.
CONSULT value should be the same as the speedometer indication.

OR

2. Turn ignition switch "ON".
3. Rotate drive wheel by hand.
4. Check voltage between ECM terminal ㉜ or ㉖ and body ground.
Voltage should vary between approx. 0 - 5V.

NG

CHECK SPEEDOMETER FUNCTION.
Make sure that speedometer functions properly.

NG → Check vehicle speed sensor and circuit. (Refer to "Inspection/ Speedometer and Vehicle Speed Sensor" of "METER AND GAUGES" in EL section.)

OK

Ⓐ

Simpo PDF Merge and Split Unregistered Version - http://www.simpopdf.com

Vehicle Speed Sensor (VSS) (Cont'd)

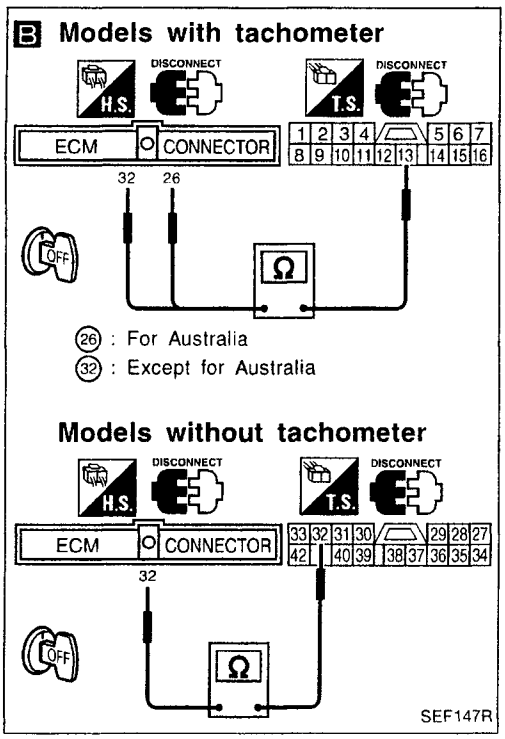

Ⓐ

B

CHECK INPUT SIGNAL CIRCUIT.
1. Turn ignition switch "OFF".
2. Disconnect ECM harness connector and combination meter harness connector.
3. Check harness continuity between ECM terminal ㉜ and terminal ⑬ or ㉜, ECM terminal ㉖ and terminal ⑬.

Continuity should exist.

If OK, check harness for short.

NG → Check the following.
- Harness connectors (F6), (M49)
- Harness for open or short between ECM and combination meter

If NG, repair harness or connectors.

OK ↓

Disconnect and reconnect harness connectors in the circuit. Then retest.

Trouble is not fixed. ↓

Check ECM pin terminals for damage or the connection of ECM harness connector. Reconnect ECM harness connector and retest.

↓

INSPECTION END

EC

Simpo PDF Merge and Split Unregistered Version - http://www.simpopdf.com

Start Signal

EC-S/SIG-01

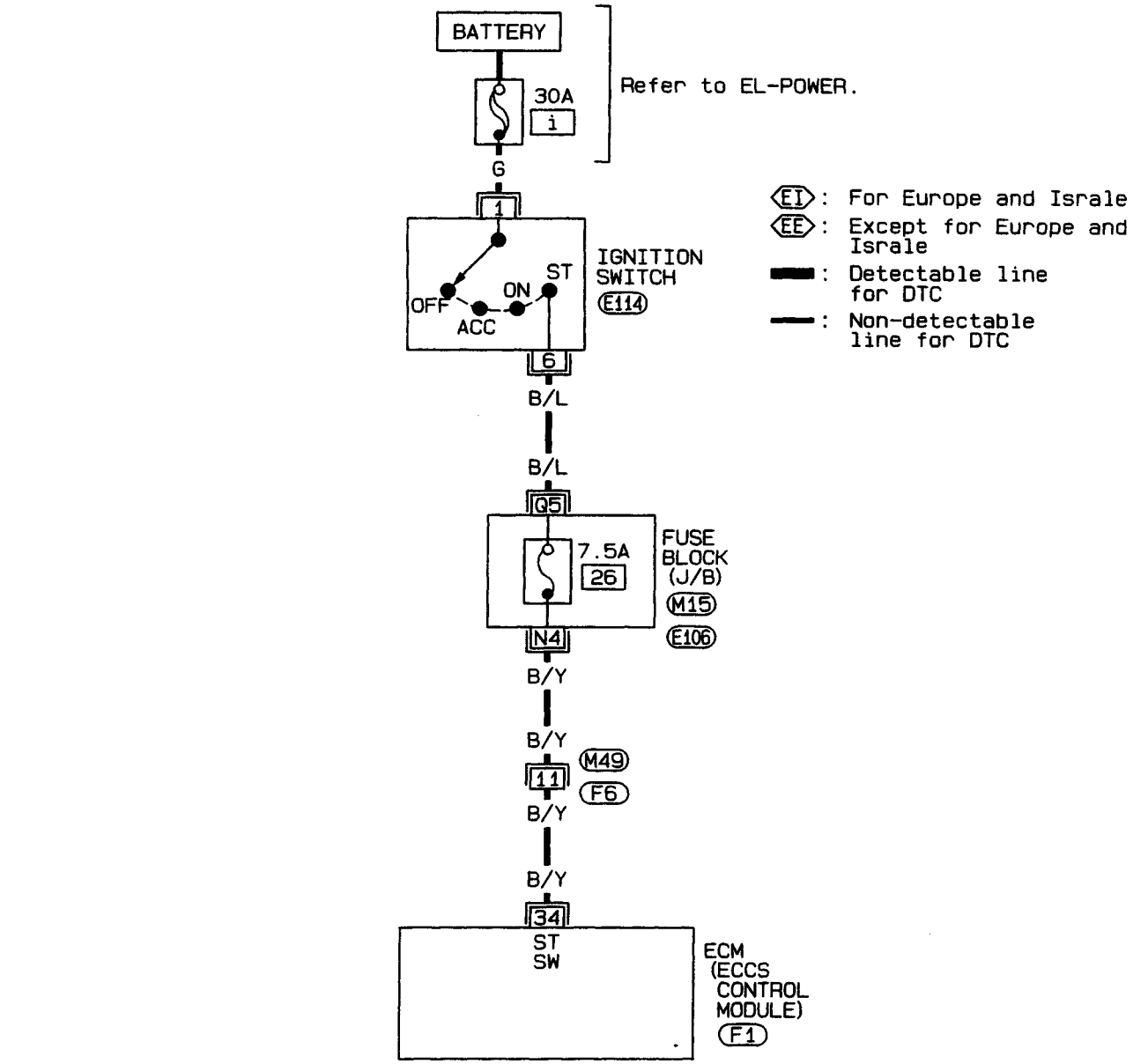

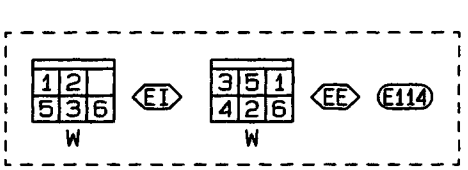

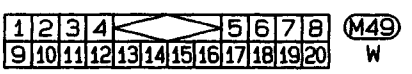

Refer to last page (Foldout page).

M15, E106

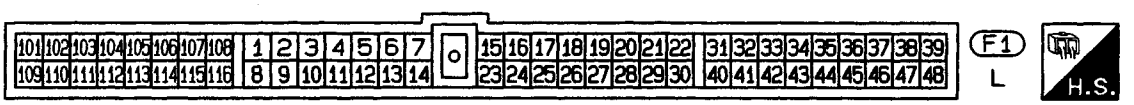

HEC038

Simpo PDF Merge and Split Unregistered Version - http://www.simpopdf.com

Start Signal (Cont'd)

GA16DE for Australia

EC-S/SIG-01

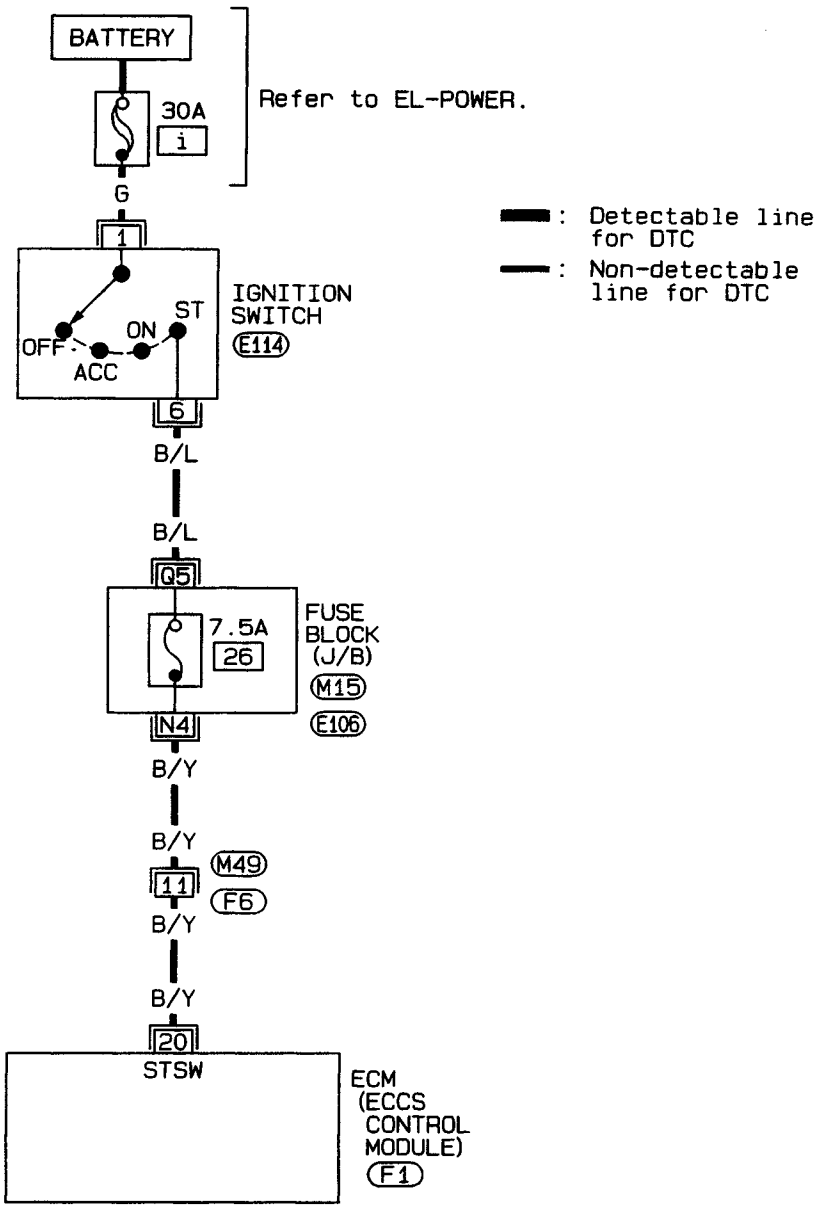

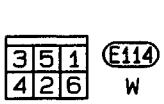

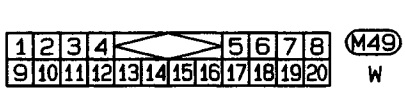

Refer to last page (Foldout page).

M15, E106

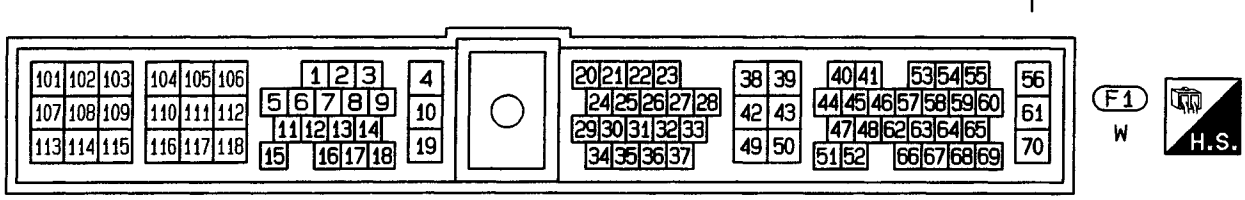

HEC070

Simpo PDF Merge and Split Unregistered Version - http://www.simpopdf.com

Start Signal (Cont'd)

DIAGNOSTIC PROCEDURE

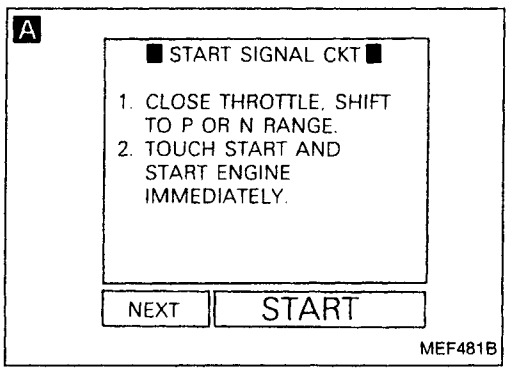

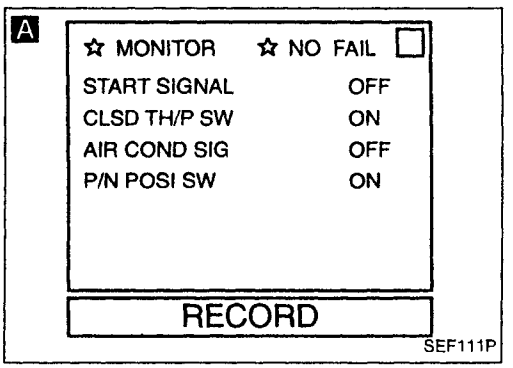

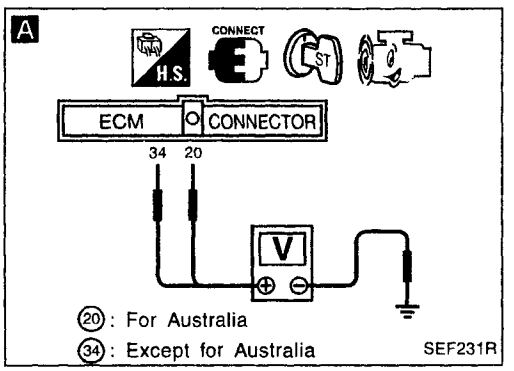

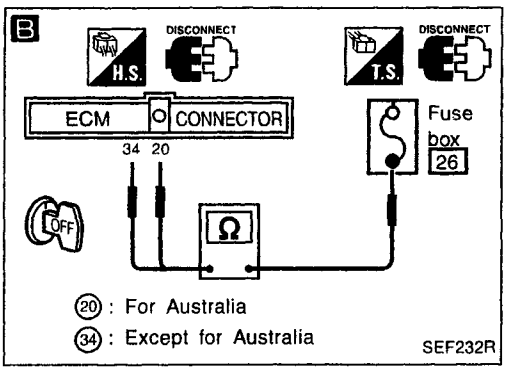

INSPECTION START

A

CHECK OVERALL FUNCTION.
1. Turn ignition switch "ON".
2. Perform "START SIGNAL CKT" in "FUNCTION TEST" mode with CONSULT.

OK → INSPECTION END

OR

2. Check "START SIGNAL" in "DATA MONITOR" mode with CONSULT.

IGN "ON"	OFF
IGN "START"	ON

OR

1. Turn ignition switch to "START".
2. Check voltage between ECM terminal ㉞ or ⑳ and ground.

Voltage:
Ignition switch "START"
Battery voltage
Except above
Approximately 0V

NG

Check if 7.5A fuse is OK. — NG → Replace 7.5A fuse.

OK

B

CHECK INPUT SIGNAL CIRCUIT. — NG →
1. Turn ignition switch "OFF".
2. Disconnect ECM harness connector and 7.5A fuse.
3. Check harness continuity between ECM terminal ㉞ or ⑳ and fuse block.
Continuity should exist.
If OK, check harness for short.

Check the following.
- Harness connectors F6, M49
- Harness for open or short between ECM and fuse block

If NG, repair harness or connectors.

OK

Disconnect and reconnect harness connectors in the circuit. Then retest.

Trouble is not fixed.

Check ECM pin terminals for damage or the connection of ECM harness connector. Reconnect ECM harness connector and retest.

INSPECTION END

Simpo PDF Merge and Split Unregistered Version - http://www.simpopdf.com

Injector

EC-INJECT-01

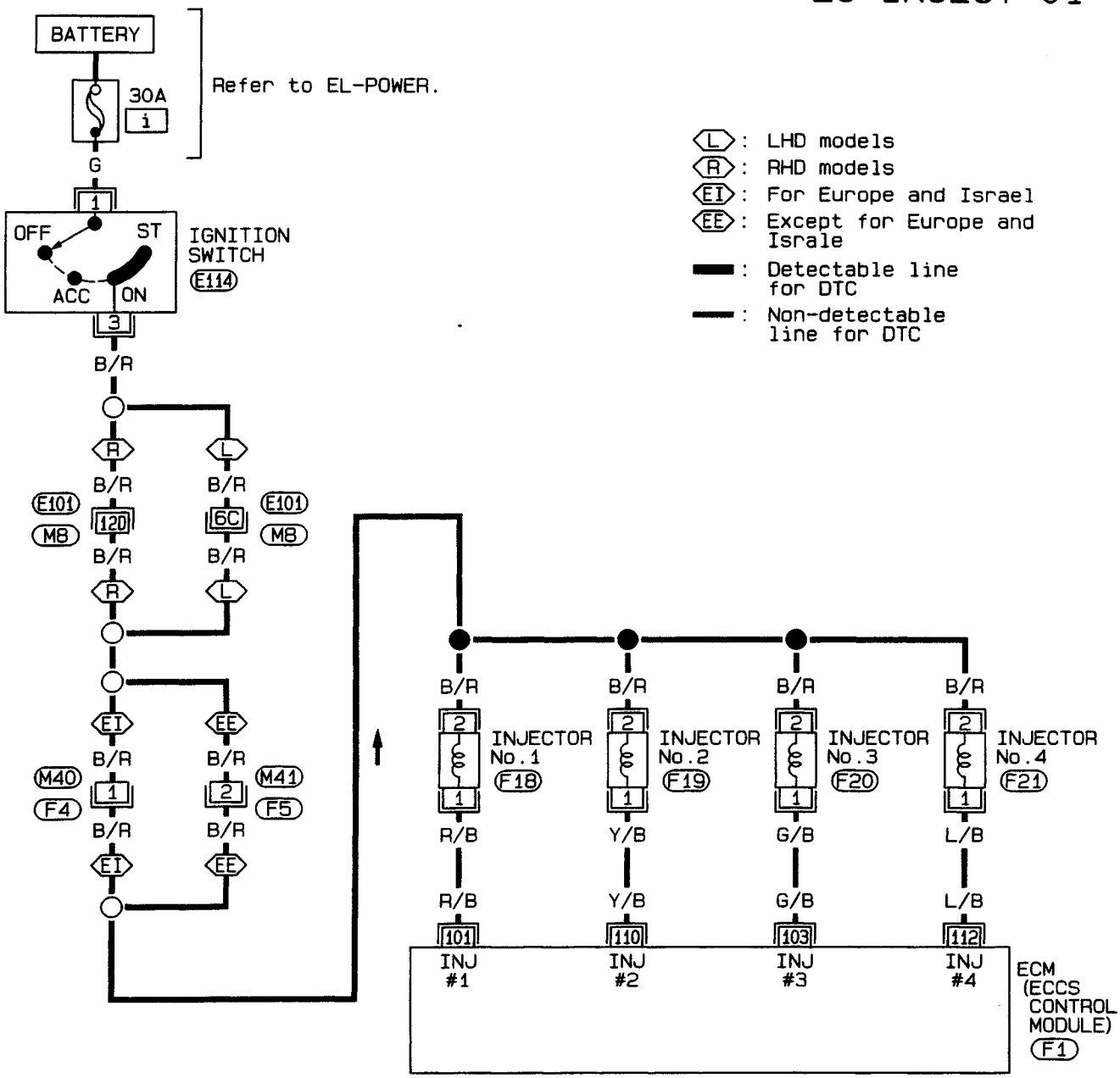

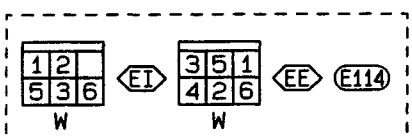

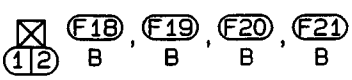

Refer to last page (Foldout page).

M8, E101

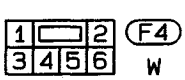

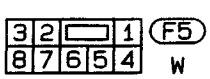

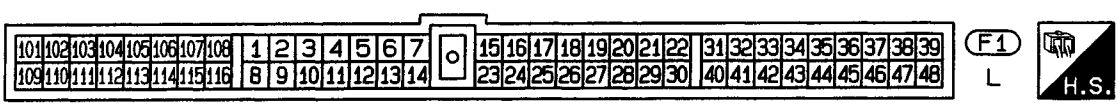

HEC039

Simpo PDF Merge and Split Unregistered Version - http://www.simpopdf.com

Injector (Cont'd)

GA16DE for Australia

EC-INJECT-01

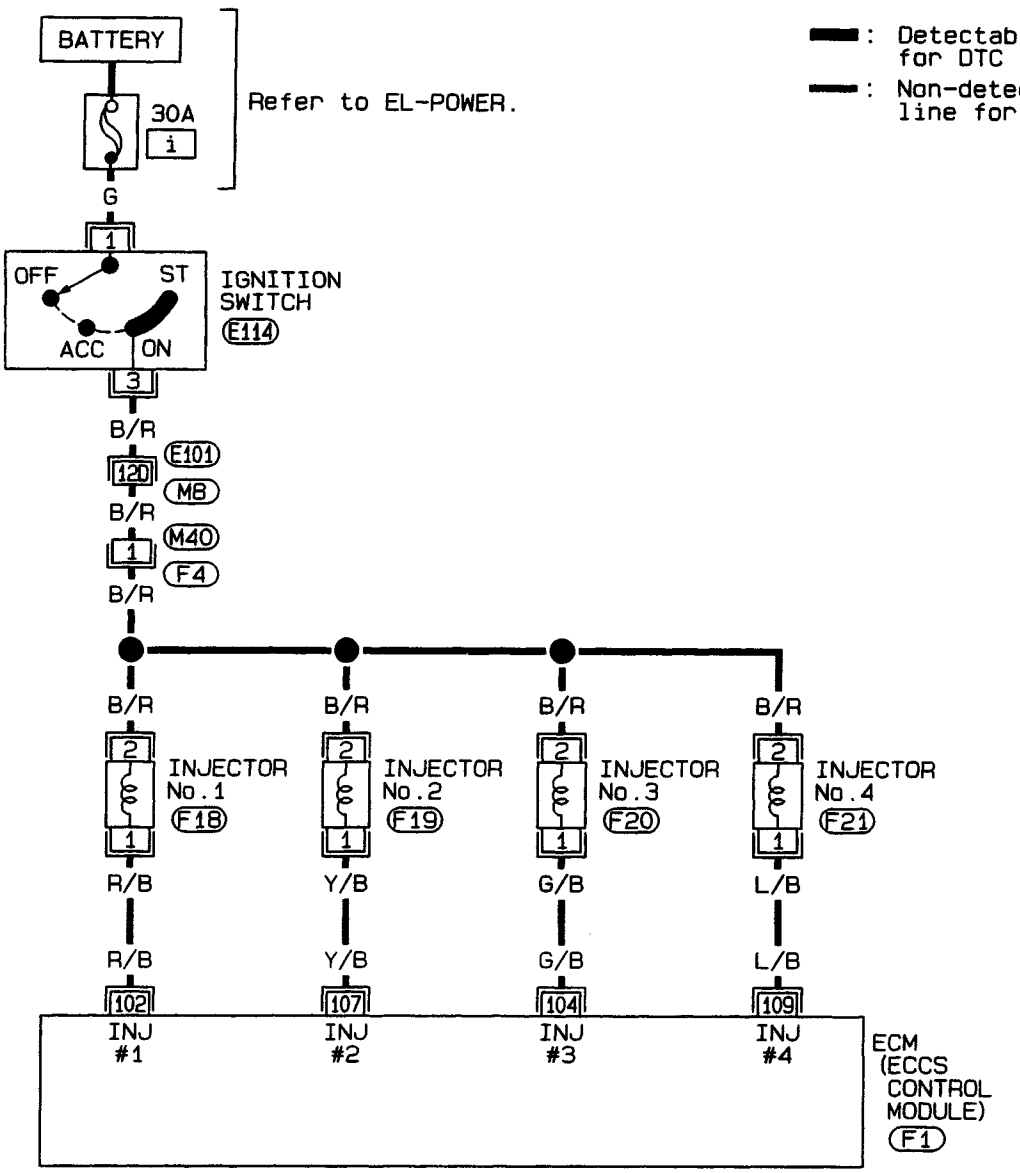

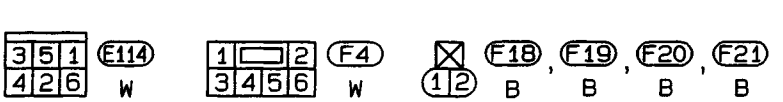

Refer to last page (Foldout page).

M8, E101

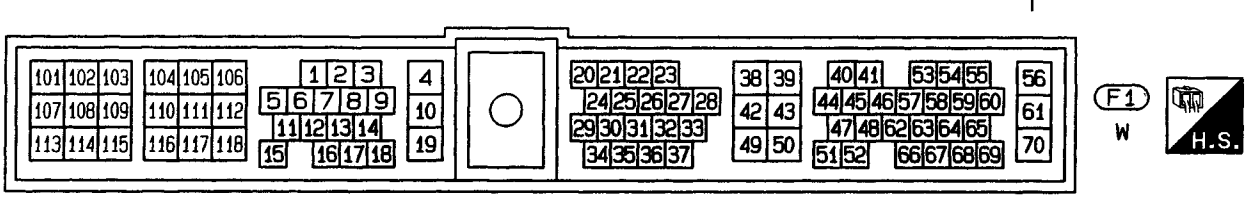

HEC071

Simpo PDF Merge and Split Unregistered Version - http://www.simpopdf.com

Injector (Cont'd)

COMPONENT DESCRIPTION

The fuel injector is a small, precise solenoid valve. When the ECM supplies a ground to the injector circuit, the coil in the injector is energized. The energized coil pulls the needle valve back and allows fuel to flow through the injector into the intake manifold. The amount of fuel injected depends upon the injection pulse duration. Pulse duration is the length of time the injector remains open. The ECM controls the injection pulse duration based on engine fuel needs.

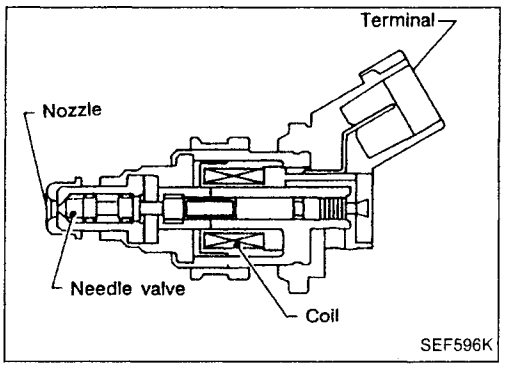

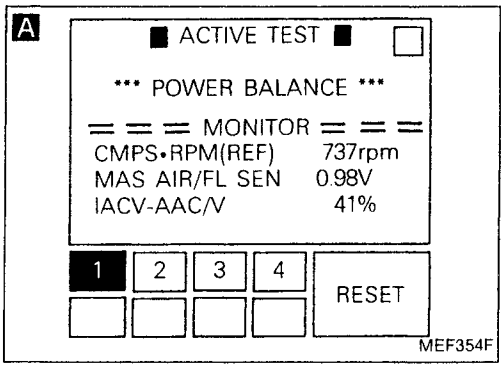

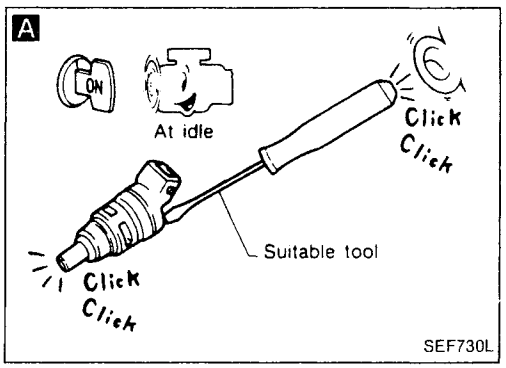

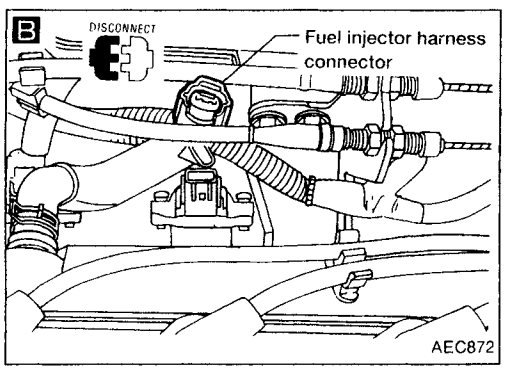

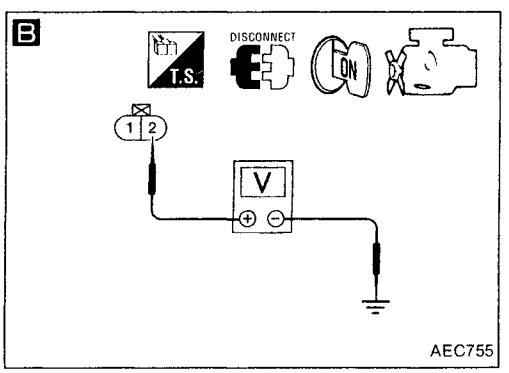

DIAGNOSTIC PROCEDURE

INSPECTION START

A

CHECK OVERALL FUNCTION.

1. Start engine.
2. Perform "POWER BALANCE" in "ACTIVE TEST" mode with CONSULT.
3. Make sure that each circuit produces a momentary engine speed drop.

OK → INSPECTION END

OR

1. Start engine.
2. Listen to each injector operating sound.
   Clicking noise should be heard.

NG

B

CHECK POWER SUPPLY.

1. Stop engine.
2. Disconnect injector harness connector.
3. Turn ignition switch "ON".
4. Check voltage between terminal ② and ground with CONSULT or tester.
   Voltage: Battery voltage

NG → Check the following.
- Harness connectors (F4), (M40) or (F5), (M41)
- Harness connectors (M8), (E101)
- Harness for open or short between injector and ignition switch

If NG, repair harness or connectors.

OK

Ⓐ

EC

Simpo PDF Merge and Split Unregistered Version - http://www.simpopdf.com

Injector (Cont'd)

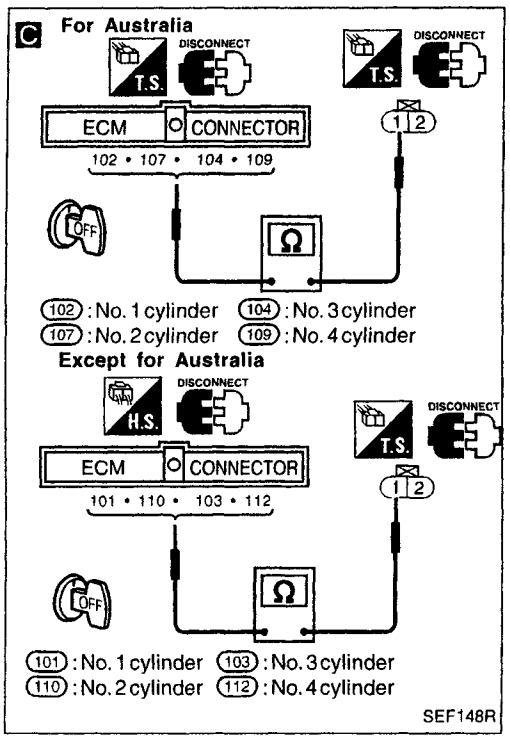

Ⓐ

C

CHECK OUTPUT SIGNAL CIRCUIT.
1. Turn ignition switch "OFF".
2. Disconnect ECM harness connector.
3. Check harness continuity between injector harness connector terminal ① and ECM terminals (101), (110), (103), (112) or (102), (107), (104), (109).
   Continuity should exist.
   If OK, check harness for short.

NG → Check the following.
- Harness for open or short between ECM and injector

If NG, repair harness or connectors.

OK ↓

CHECK COMPONENT (Injector).
Refer to "COMPONENT INSPECTION" below.

NG → Replace injector.

OK ↓

Disconnect and reconnect harness connectors in the circuit. Then retest.

Trouble is not fixed. ↓

Check ECM pin terminals for damage or the connection of ECM harness connector. Reconnect ECM harness connector and retest.

↓

INSPECTION END

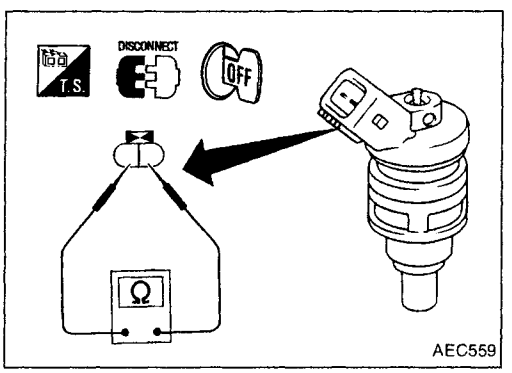

COMPONENT INSPECTION

Injector

1. Disconnect injector harness connector.
2. Check resistance between terminals as shown in the figure.
   Resistance: 10 - 14Ω [at 25°C (77°F)]
   If NG, replace injector.

Simpo PDF Merge and Split Unregistered Version - http://www.simpopdf.com

Fuel Pump

SYSTEM DESCRIPTION

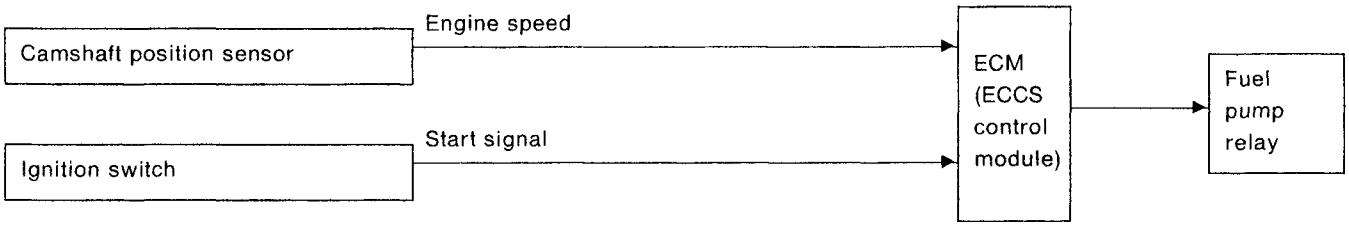

The ECM activates the fuel pump for several seconds after the ignition switch is turned on to improve engine startability. If the ECM receives a 180° signal from the camshaft position sensor, it knows that the engine is rotating, and causes the pump to perform. If the 180° signal is not received when the ignition switch is on, the engine stalls. The ECM stops pump operation and prevents battery discharging, thereby improving safety. The ECM does not directly drive the fuel pump. It controls the ON/OFF fuel pump relay, which in turn controls the fuel pump.

Condition	Fuel pump operation
Ignition switch is turned to ON.	Operates for 5 seconds
Engine running and cranking	Operates
When engine is stopped	Stops in 1 second
Except as shown above	Stops

EC

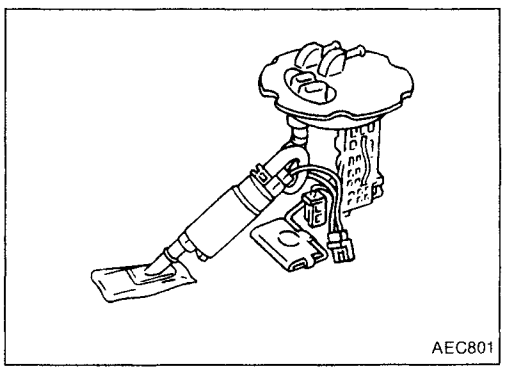

COMPONENT DESCRIPTION

A turbine type design fuel pump is used in the fuel tank.

Simpo PDF Merge and Split Unregistered Version - http://www.simpopdf.com

Fuel Pump (Cont'd)

EC-F/PUMP-01

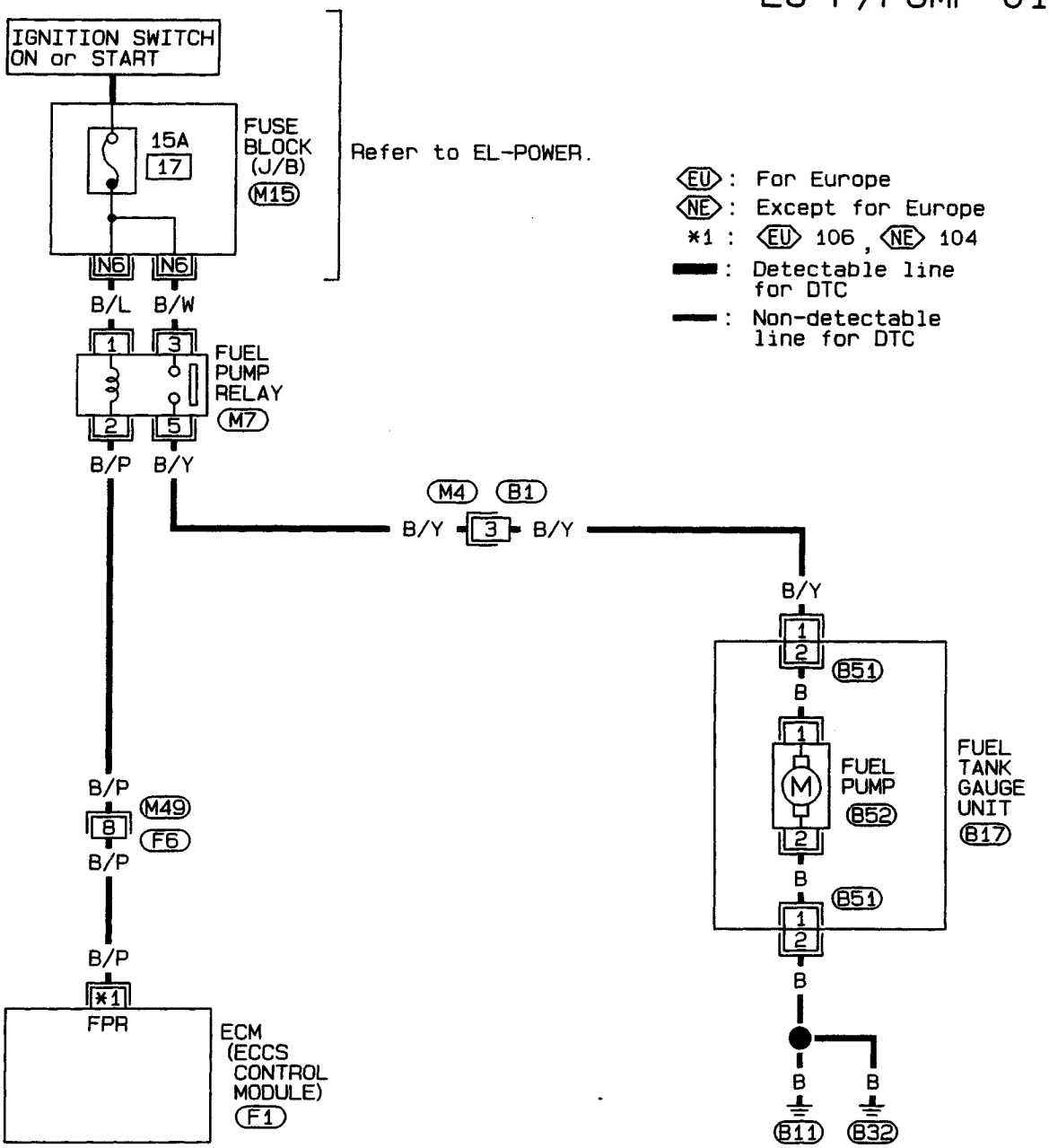

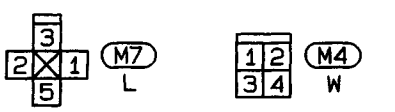

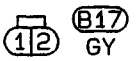

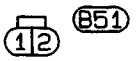

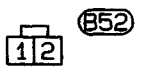

Refer to last page (Foldout page).

M15

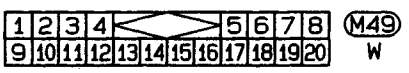



HEC040

Simpo PDF Merge and Split Unregistered Version - http://www.simpopdf.com

Fuel Pump (Cont'd)

GA16DE for Australia

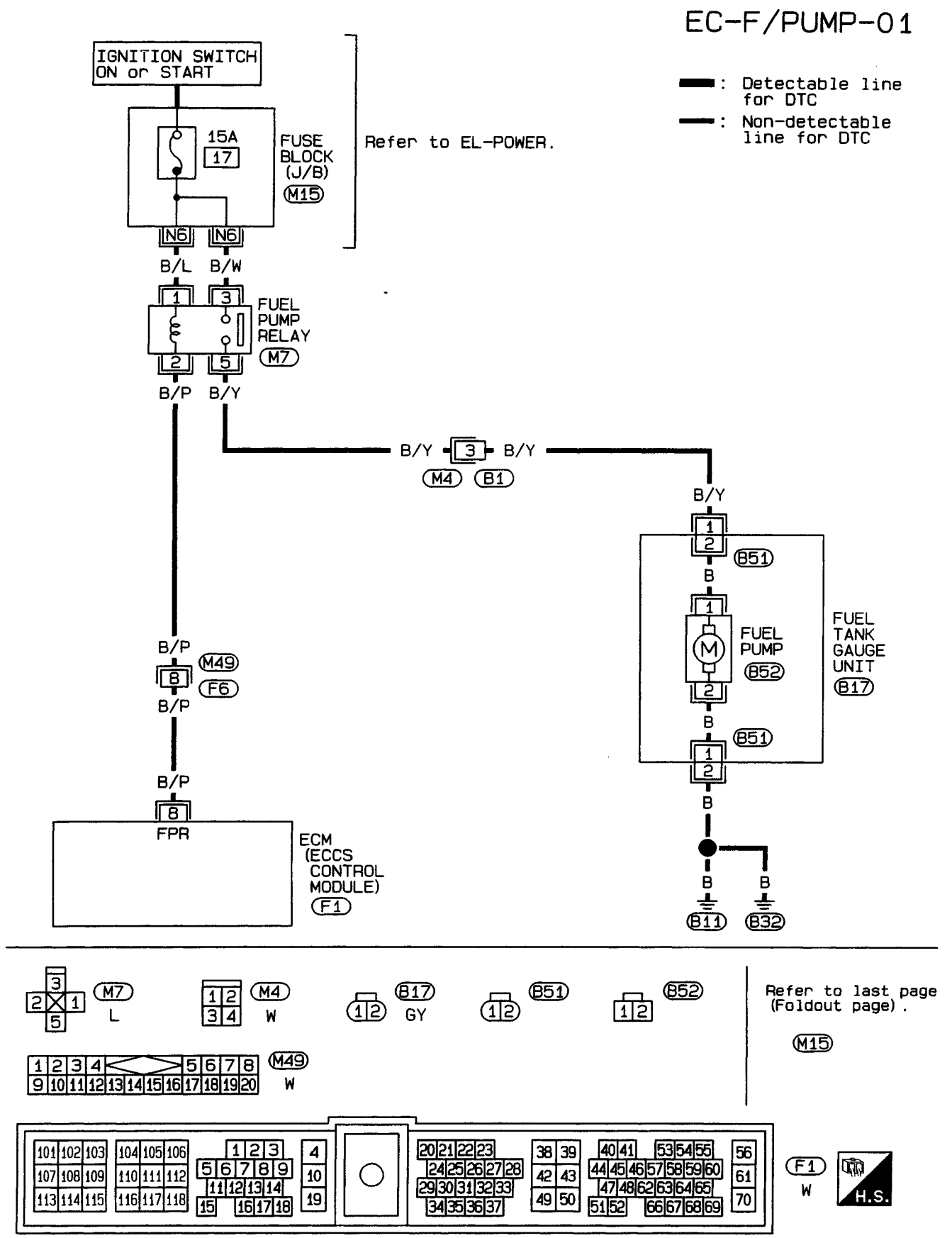

HEC072

Simpo PDF Merge and Split Unregistered Version - http://www.simpopdf.com

Fuel Pump (Cont'd)

DIAGNOSTIC PROCEDURE

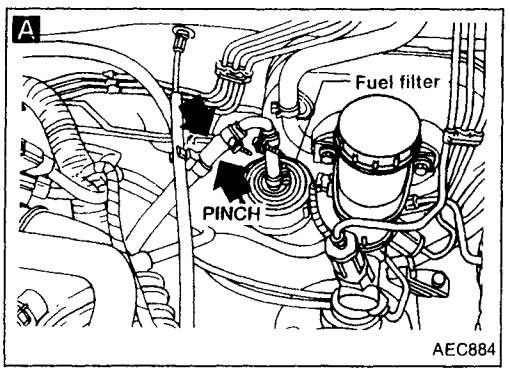

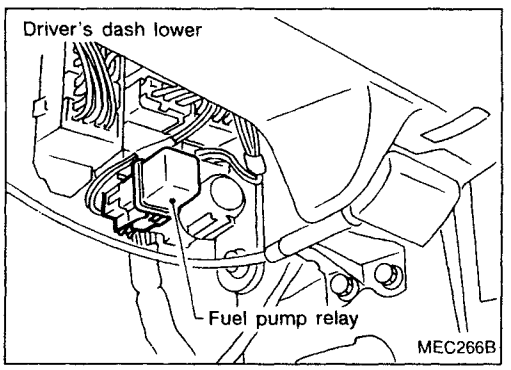

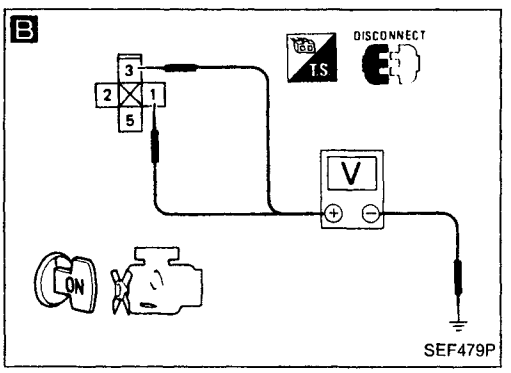

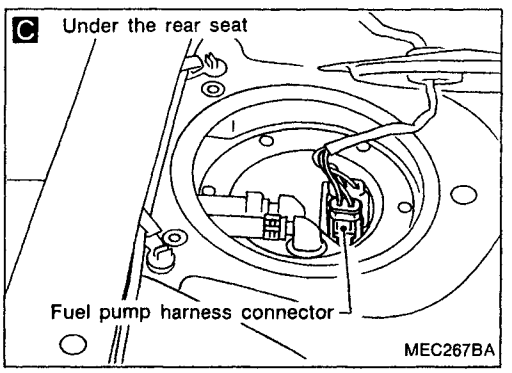

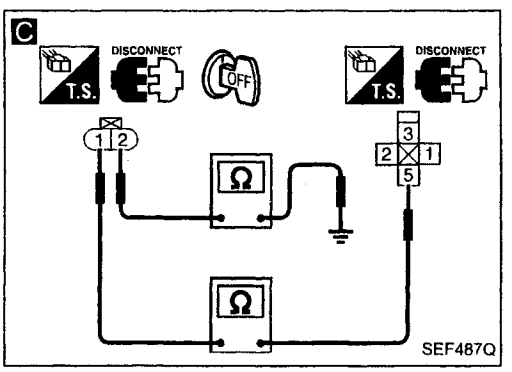

INSPECTION START

A

CHECK OVERALL FUNCTION.
1. Turn ignition switch "ON".
2. Pinch fuel feed hose with fingers.
   Fuel pressure pulsation should be felt on the fuel feed hose for 5 seconds after ignition switch is turned "ON".

OK → INSPECTION END

NG ↓

B

CHECK POWER SUPPLY.
1. Turn ignition switch "OFF".
2. Disconnect fuel pump relay from relay box.
3. Turn ignition switch "ON".
4. Check voltage between terminals ①, ③ and ground with CONSULT or tester.
   Voltage: Battery voltage

NG → Check the following.
- 15A fuse
- Harness for open or short between fuse and fuel pump relay

If NG, repair harness or connectors.

OK ↓

C

CHECK POWER GROUND CIRCUIT.
1. Turn ignition switch "OFF".
2. Disconnect fuel pump harness connector.
3. Check harness continuity between terminal ② and body ground, terminal ① and fuel pump relay connector terminal ⑤.
   Continuity should exist.
   If OK, check harness for short.

NG → Check the following.
- Harness connectors (M4), (B1)
- Harness connectors (B17), (B51)
- Harness for open or short between fuel pump and body ground
- Harness for open or short between fuel pump and fuel pump relay

If NG, repair harness or connectors.

OK ↓

D

CHECK OUTPUT SIGNAL CIRCUIT.
1. Disconnect ECM harness connector.
2. Check harness continuity between ECM terminal (104), (106) or (108) and fuel pump relay connector terminal ②.
   Continuity should exist.
   If OK, check harness for short.

NG → Check the following.
- Harness connectors (F6), (M49)
- Harness for open or short between ECM and fuel pump relay

If NG, repair harness or connectors.

OK ↓

Ⓐ

Simpo PDF Merge and Split Unregistered Version - http://www.simpopdf.com

Fuel Pump (Cont'd)

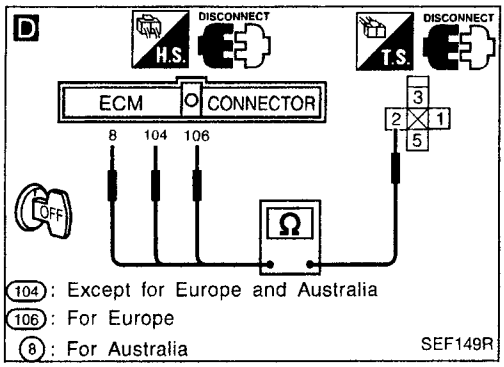

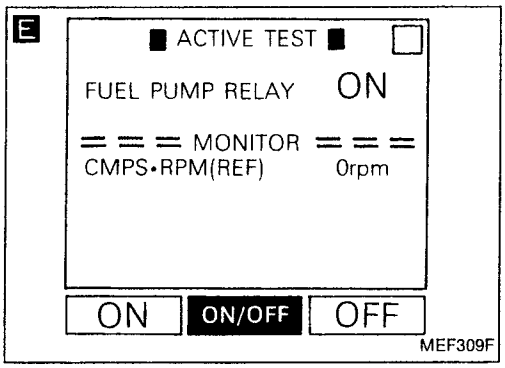

Ⓐ

E

CHECK COMPONENT
(Fuel pump relay).
Refer to "Component Inspection" below.
NG → Replace fuel pump relay.
OK ↓

CHECK COMPONENT
(Fuel pump).
Refer to "COMPONENT INSPECTION" below.
NG → Replace fuel pump.
OK ↓

Disconnect and reconnect harness connectors in the circuit. Then retest.
Trouble is not fixed. ↓

Check ECM pin terminals for damage or the connection of ECM harness connector. Reconnect ECM harness connector and retest.

INSPECTION END

EC

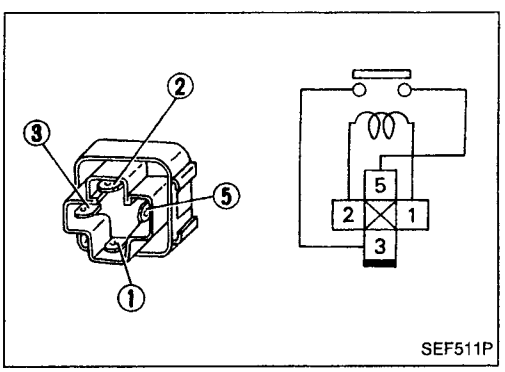

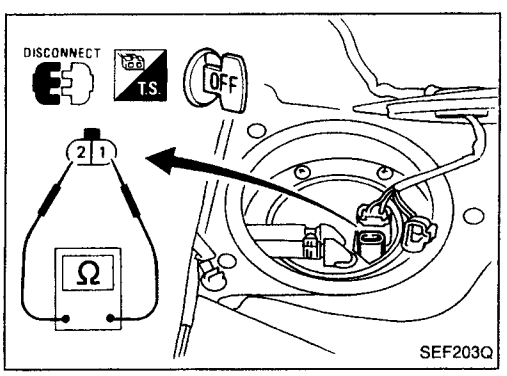

COMPONENT INSPECTION

Fuel pump relay

Check continuity between terminals ③ and ⑤.

Conditions	Continuity
12V direct current supply between terminals ① and ②	Yes
No current supply	No

If NG, replace relay.

Fuel pump

1. Disconnect fuel pump harness connector.
2. Check resistance between terminals ① and ②.
   Resistance: 0.2 - 5.0Ω [at 25°C (77°F)]

If NG, replace fuel pump.

Simpo PDF Merge and Split Unregistered Version - http://www.simpopdf.com

Idle Air Control Valve (IACV) — Auxiliary Air Control (AAC) Valve

SYSTEM DESCRIPTION

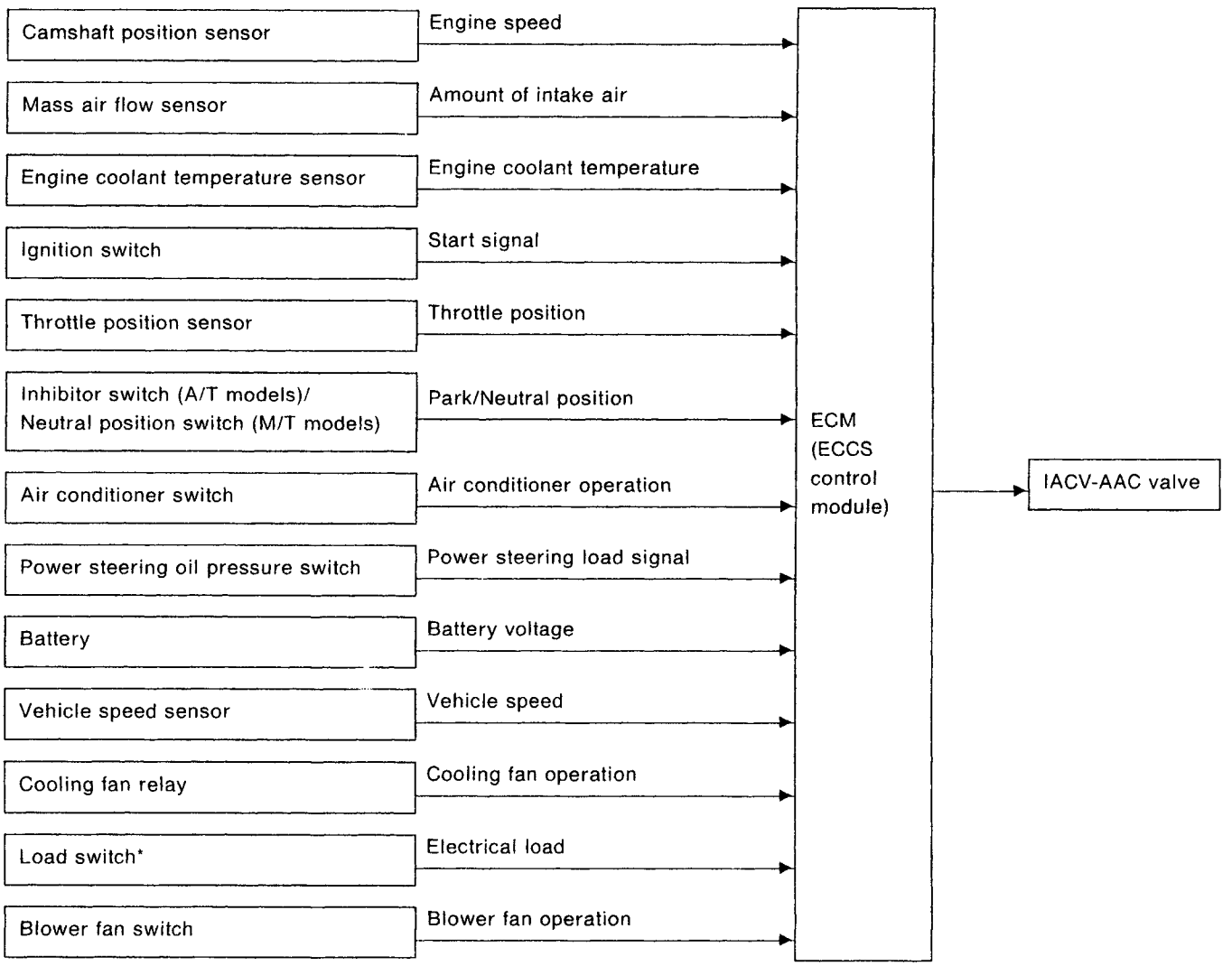

*: Rear window defogger switch and headlamp switch.

This system automatically controls engine idle speed to a specified level. Idle speed is controlled through fine adjustment of the amount of air which bypasses the throttle valve via IACV-AAC valve. The IACV-AAC valve opens and closes (except for Europe and Israel), or repeats ON/OFF operation (for Europe and Israel), according to the signal sent from the ECM. The camshaft position sensor detects the actual engine speed and sends a signal to the ECM. The ECM then controls the IACV-AAC valve so that engine speed coincides with the target value memorized in ECM. The target engine speed is the lowest speed at which the engine can operate steadily. The optimum value stored in the ECM is determined by taking into consideration various engine conditions, such as during warm up, deceleration, and engine load (air conditioner, power steering and cooling fan operation).

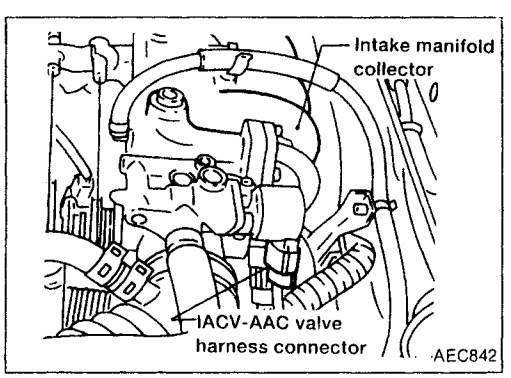

COMPONENT DESCRIPTION

IACV-AAC valve — Except for Europe and Israel

The IACV-AAC valve is moved by open and close signals from the ECM. When the open signal is sent to the valve, the amount of air that will flow through the valve increases. The more air that flows through the valve, the higher the idle speed. When the close signal is sent to the valve, the amount of air decreases.

Simpo PDF Merge and Split Unregistered Version - http://www.simpopdf.com

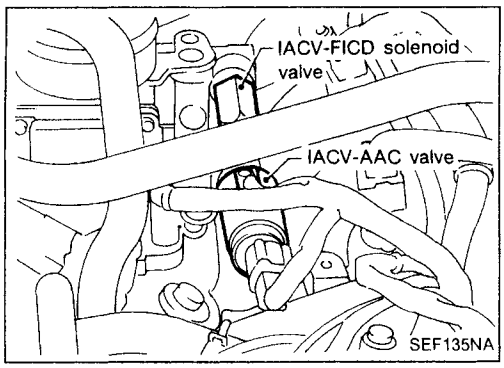

Idle Air Control Valve (IACV) — Auxiliary Air Control (AAC) Valve (Cont'd)

IACV-AAC valve — For Europe and Israel

The IACV-AAC valve is moved by ON/OFF pulses from the ECM. The longer the ON pulse, the greater the amount of air that will flow through the valve. The more air that flows through the valve, the higher the idle speed.

Simpo PDF Merge and Split Unregistered Version - http://www.simpopdf.com

Idle Air Control Valve (IACV) — Auxiliary Air Control (AAC) Valve (Cont'd)

EC-AAC/V-01

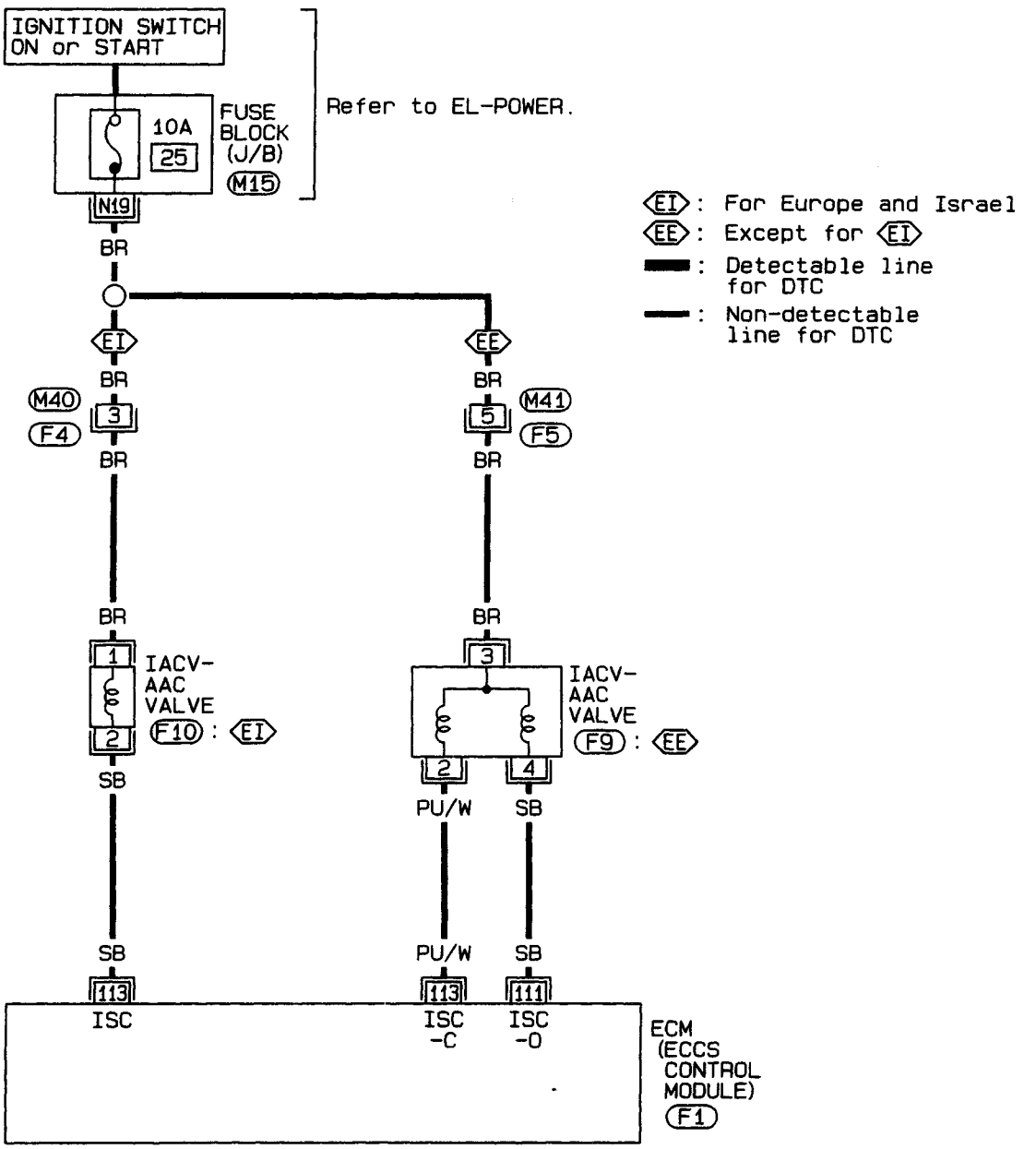



Refer to last page (Foldout page).

M15

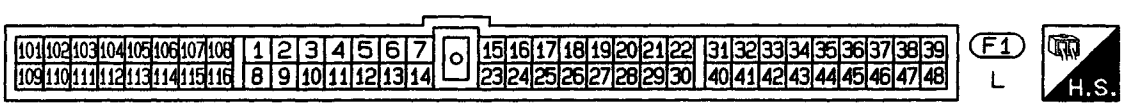

HEC043

Simpo PDF Merge and Split Unregistered Version - http://www.simpopdf.com

Idle Air Control Valve (IACV) — Auxiliary Air Control (AAC) Valve (Cont'd)

GA16DE for Australia

EC-AAC/V-01

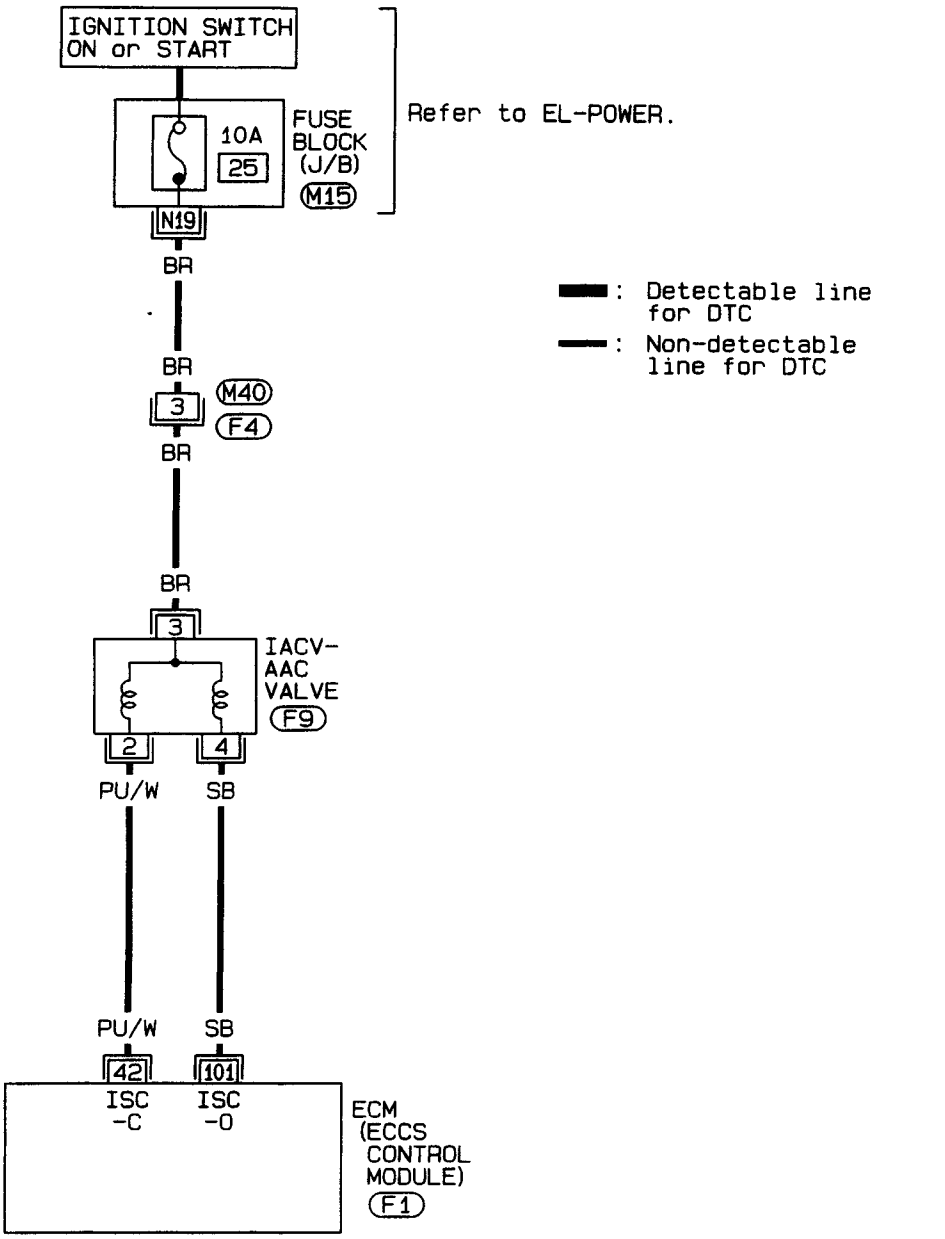

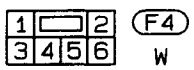



Refer to last page (Foldout page).

M15

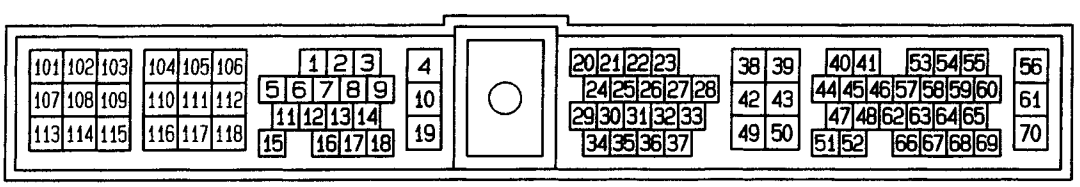

HEC075

Simpo PDF Merge and Split Unregistered Version - http://www.simpopdf.com

Idle Air Control Valve (IACV) — Auxiliary Air Control (AAC) Valve (Cont'd)

DIAGNOSTIC PROCEDURE

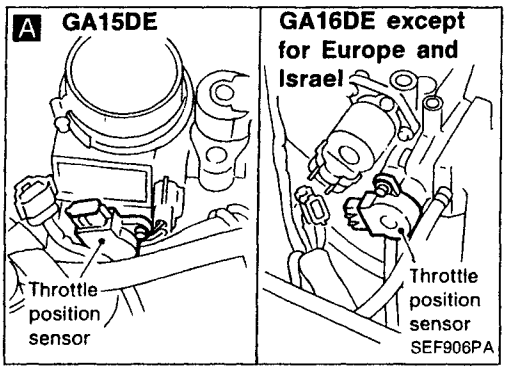

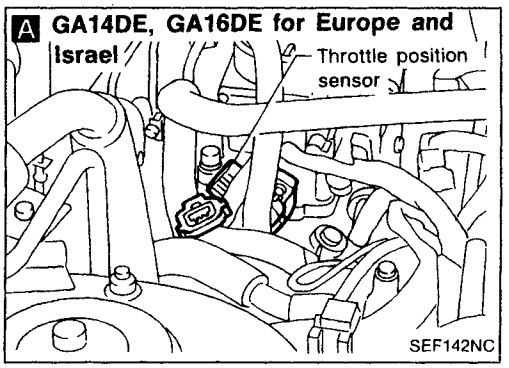

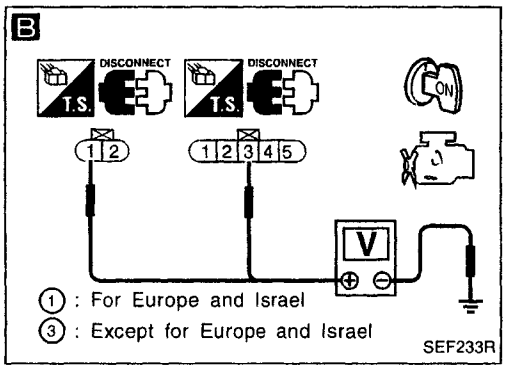

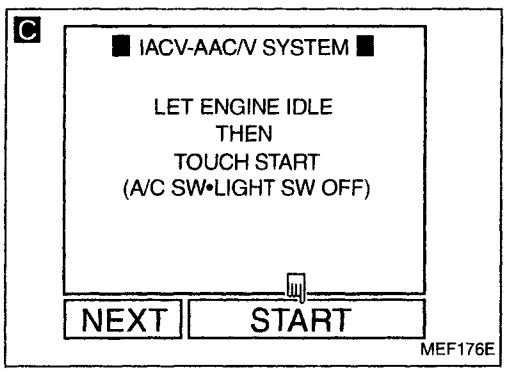

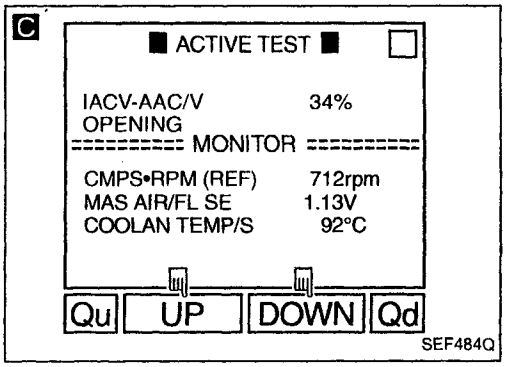

INSPECTION START

A

CHECK OVERALL FUNCTION.
1. Start engine and warm it up sufficiently.
2. Check idle speed.
   If NG, adjust idle speed.
   3. ● Perform "AAC VALVE ADJ" or "IACV-AAC/V ADJ" in "WORK SUPPORT" mode with CONSULT.
      ● Disconnect throttle position sensor harness connector.
   4. Make sure that idle speed drops.

OK → INSPECTION END

NG

B

CHECK POWER SUPPLY.
1. Stop engine.
2. Disconnect IACV-AAC valve harness connector.
3. Turn ignition switch "ON".
4. Check voltage between terminal ③ or ① and ground.
   Voltage: Battery voltage

NG → Check the following.
- Harness connectors F4, M40 or F5, M41
- 10A fuse
- Harness for open or short between IACV-AAC valve and fuse

If NG, repair harness or connectors.

OK

C

CHECK OUTPUT SIGNAL CIRCUIT.
1. Turn ignition switch "OFF".
   2. Reconnect IACV-AAC valve harness connector and then start engine.
   3. Perform "IACV-AAC/V SYSTEM" in "FUNCTION TEST" mode with CONSULT.

OR

   3. Perform "IACV-AAC/V OPENING" in "ACTIVE TEST" mode with CONSULT.

OR

   2. Disconnect ECM harness connector.
   3. Check harness continuity between ECM terminal 113 or 42 and terminal ②, ECM terminal 111 or 101 and terminal ④.
      Continuity should exist.
      If OK, check harness for short.

NG → Repair harness or connectors.

OK

Ⓐ

Simpo PDF Merge and Split Unregistered Version - http://www.simpopdf.com

Idle Air Control Valve (IACV) — Auxiliary Air Control (AAC) Valve (Cont'd)

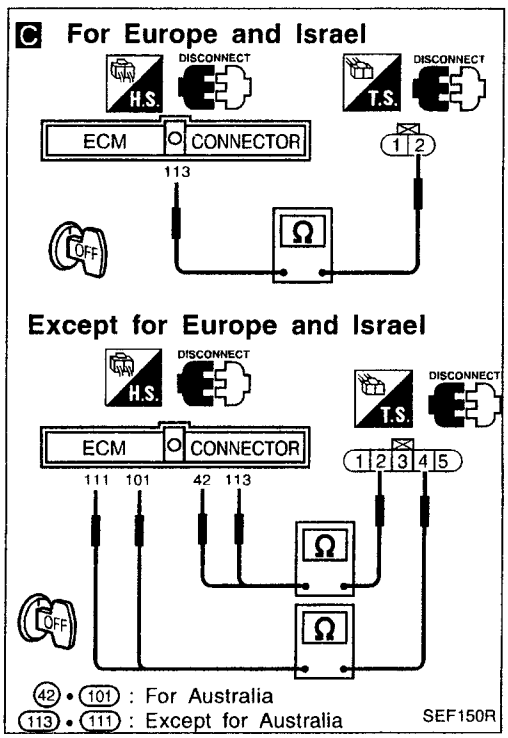

Ⓐ

CHECK COMPONENT (IACV-AAC valve). Refer to "COMPONENT INSPECTION" below.
NG → Replace IACV-AAC valve.

OK ↓

Disconnect and reconnect harness connectors in the circuit. Then retest.

Trouble is not fixed. ↓

Check ECM pin terminals for damage or the connection of ECM harness connector. Reconnect ECM harness connector and retest.

EC

COMPONENT INSPECTION

IACV-AAC valve — Except for Europe and Israel

Disconnect IACV-AAC valve harness connector.

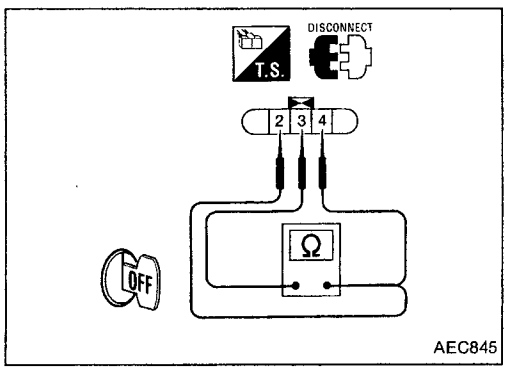

- Check resistance between terminals ② and ③, ③ and ④.

  Resistance:
  50 - 100Ω [at 25°C (77°F)]

IACV-AAC VALVE — For Europe and Israel

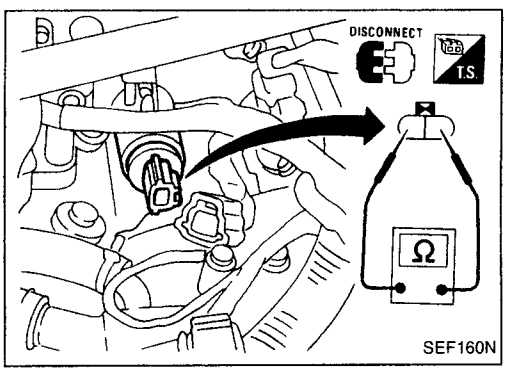

- Check IACV-AAC valve resistance.

  Resistance:
  Approximately 10Ω [at 25°C (77°F)]

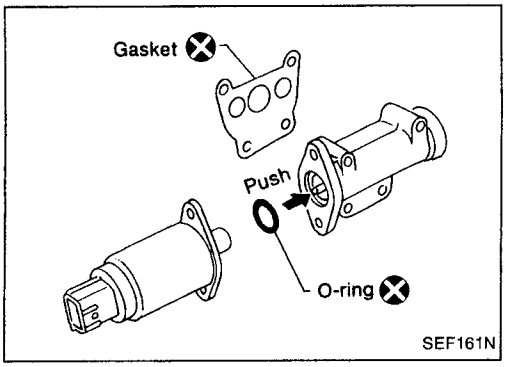

- Check plunger for seizing or sticking.

Simpo PDF Merge and Split Unregistered Version - http://www.simpopdf.com

Cooling Fan Control

SYSTEM DESCRIPTION

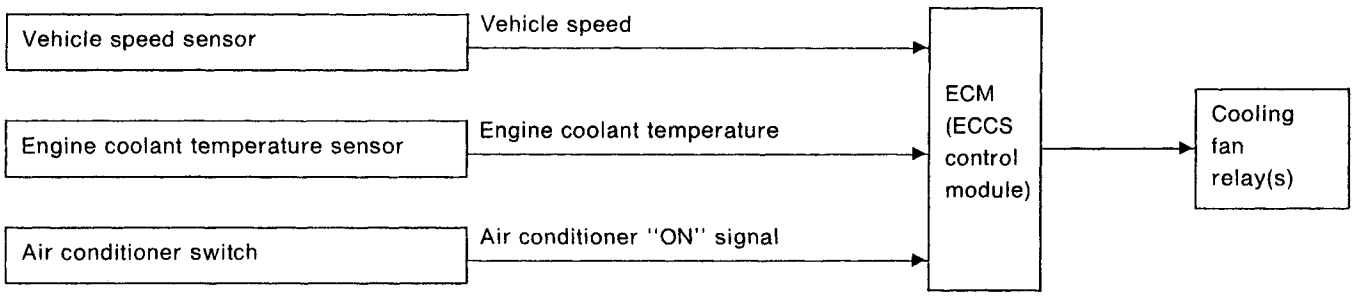

M/T MODELS

The ECM controls the cooling fan corresponding to the vehicle speed, engine coolant temperature, and air conditioner ON signal. The control system has 2-step control [ON/OFF].

Operation

For Europe with daytime light system

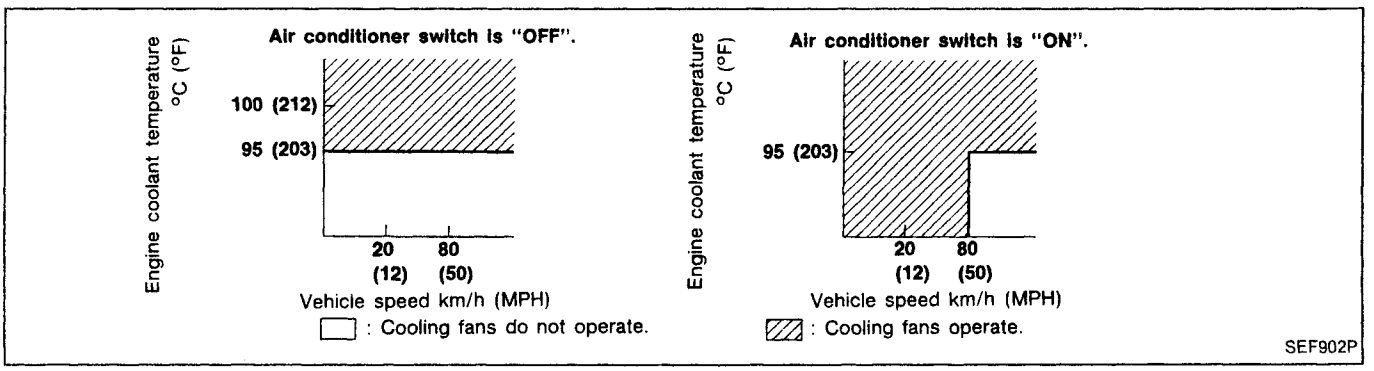

For Europe without daytime light system and Australia

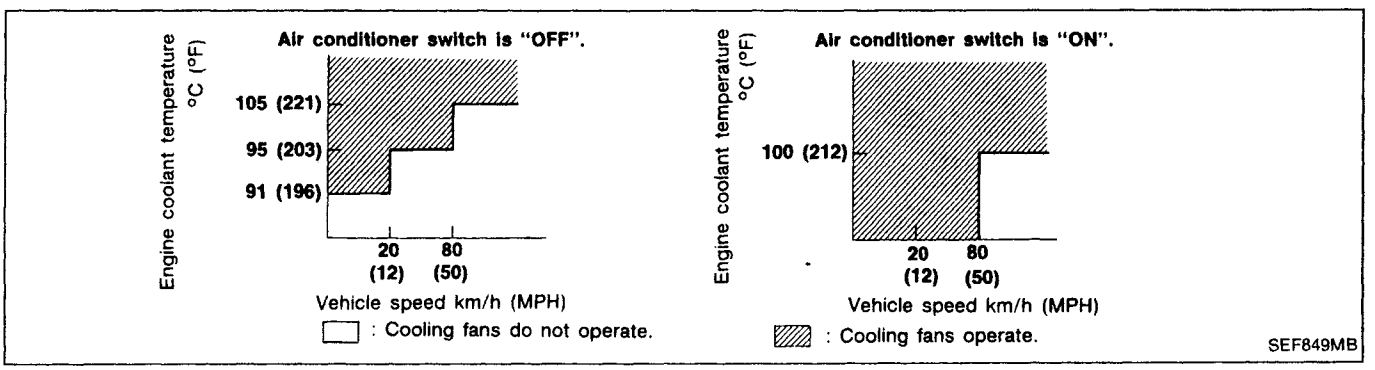

Simpo PDF Merge and Split Unregistered Version - http://www.simpopdf.com

Cooling Fan Control (Cont'd)

A/T MODELS

The ECM controls the cooling fan corresponding to the vehicle speed, engine coolant temperature, and air conditioner ON signal. The control system has 3-step control [HIGH/LOW/OFF].

Operation

For Europe with daytime light system

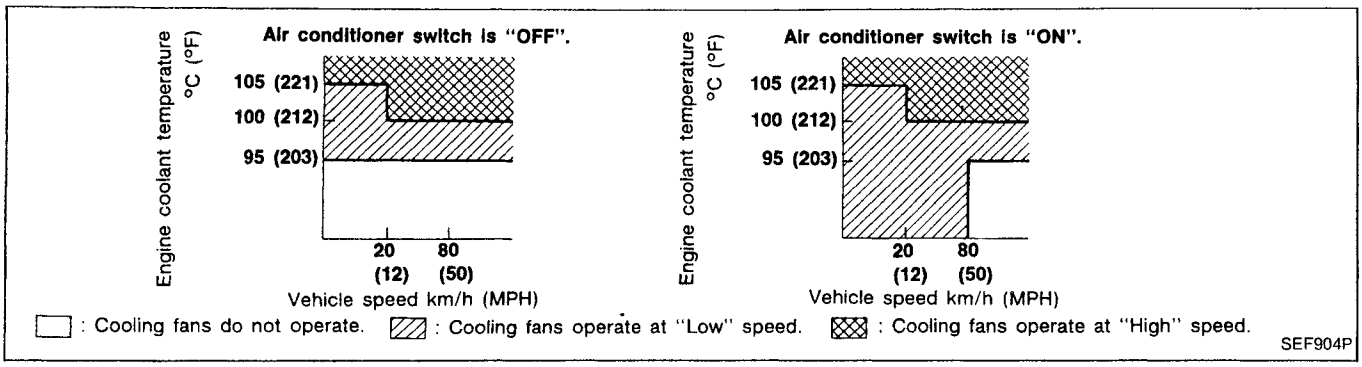

For Europe without daytime light system and Australia

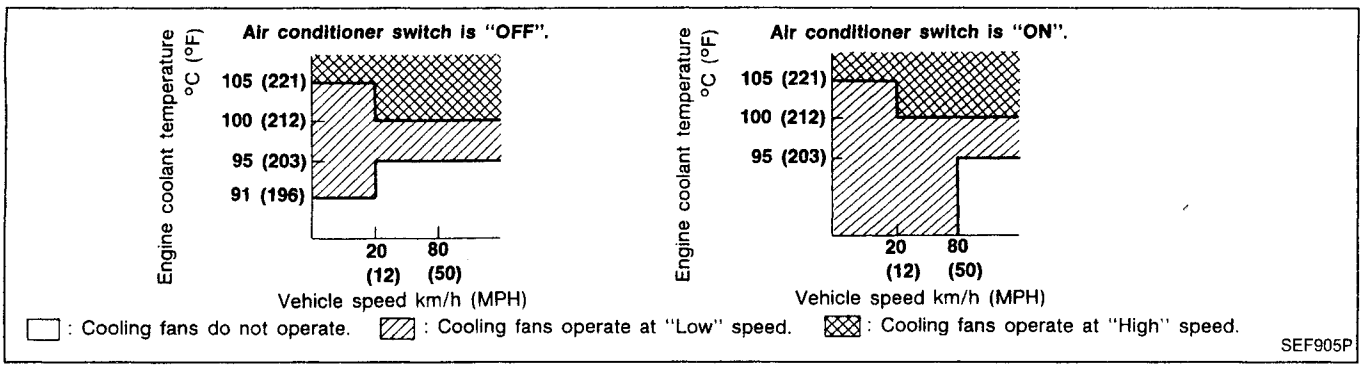

EC

Simpo PDF Merge and Split Unregistered Version - http://www.simpopdf.com

Cooling Fan Control (Cont'd)

EC-COOL/F-01

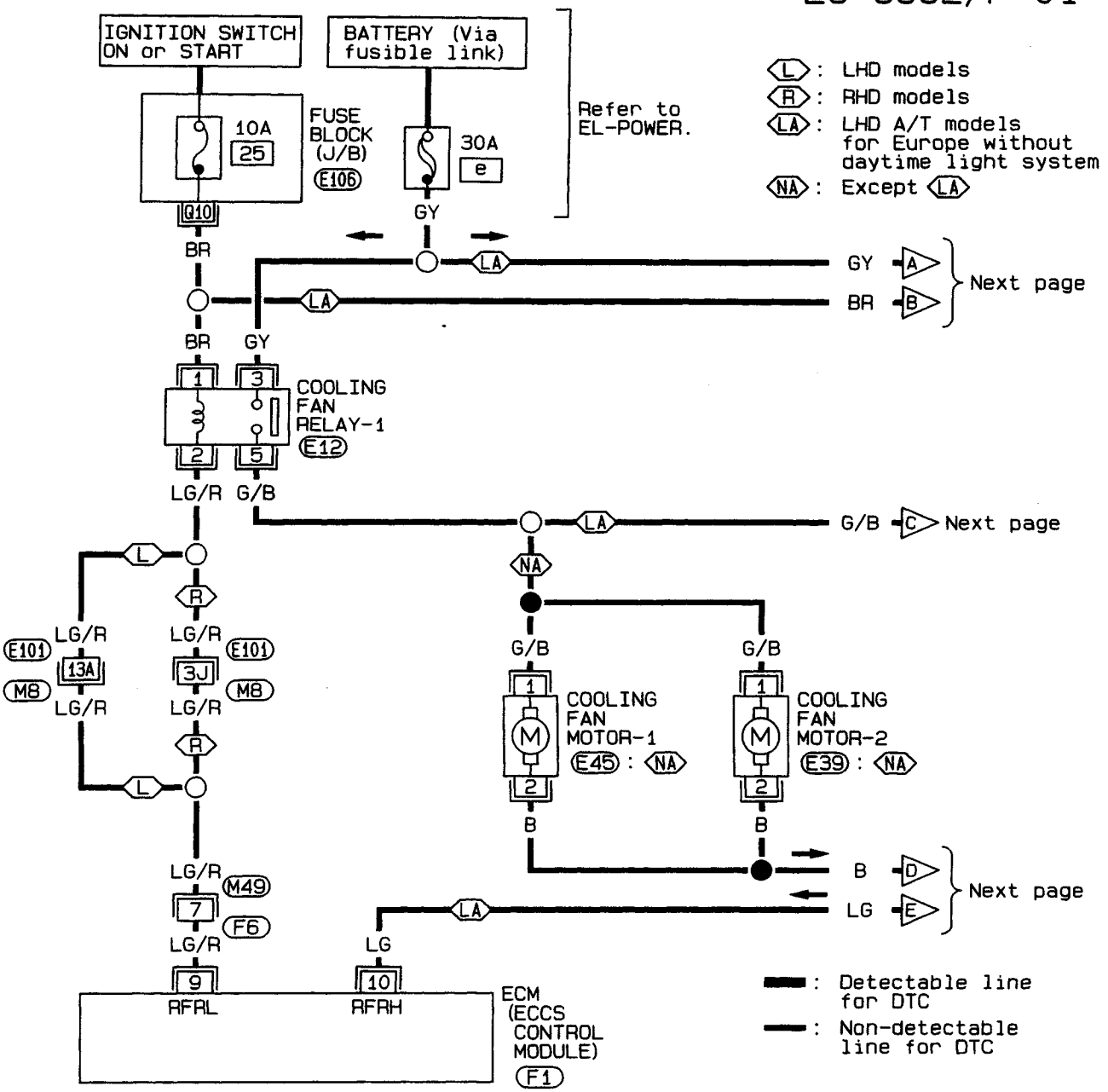

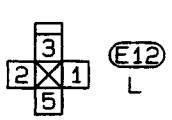

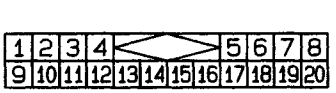

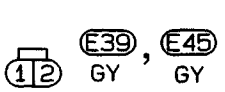

Refer to last page (Foldout page).

M8, E101
E106

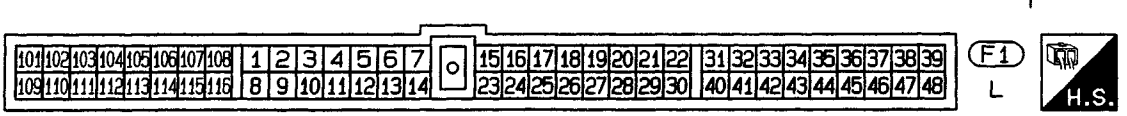

HEC044

Simpo PDF Merge and Split Unregistered Version - http://www.simpopdf.com

Cooling Fan Control (Cont'd)

EC-COOL/F-02

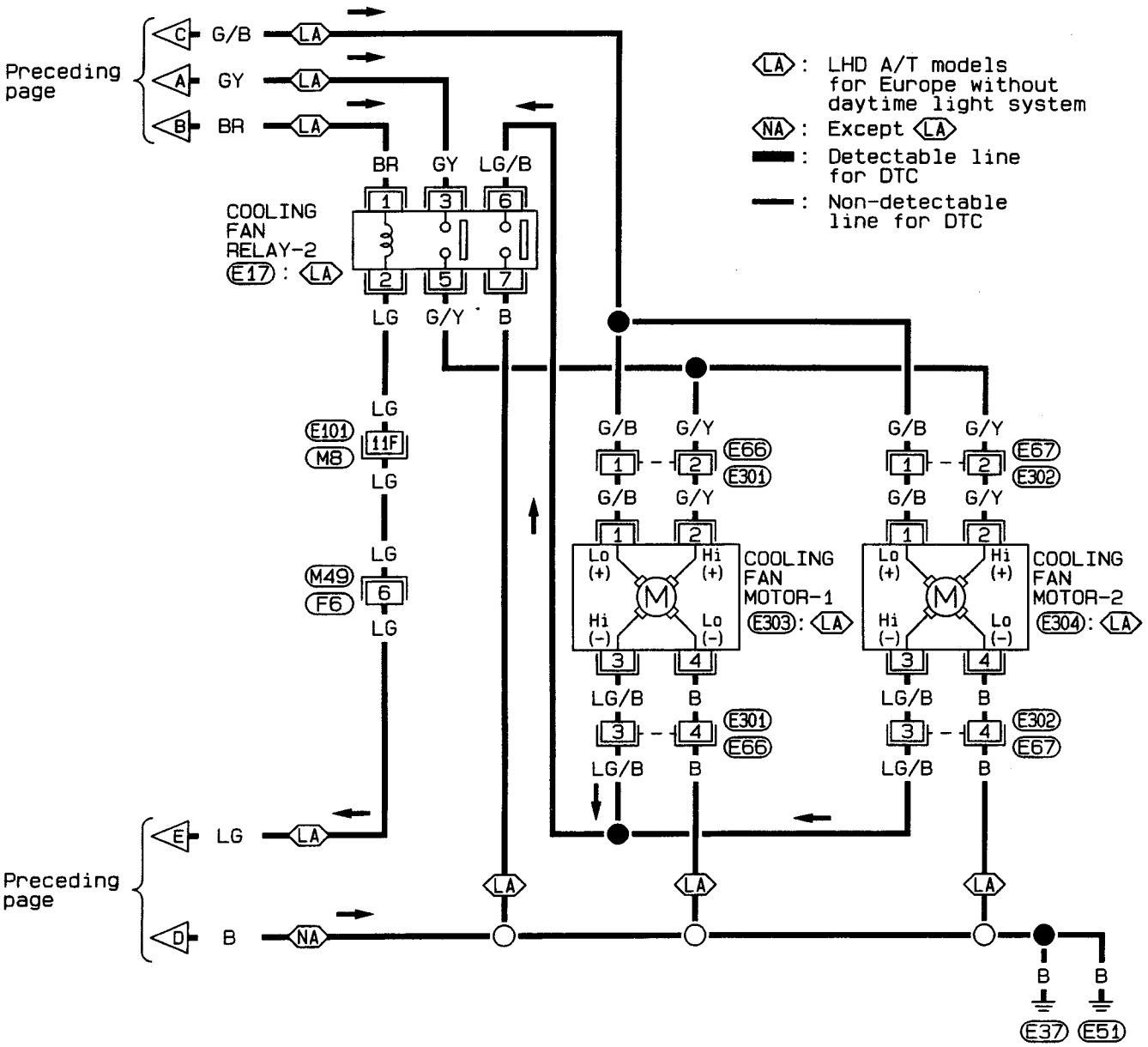

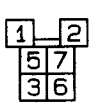

E17
BR



E66, E67, E303, E304
GY GY GY GY

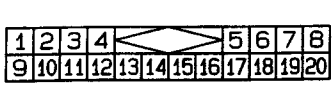

M49
W

Refer to last page (Foldout page).

M8, E101

Simpo PDF Merge and Split Unregistered Version - http://www.simpopdf.com

Cooling Fan Control (Cont'd)

GA16DE for Australia

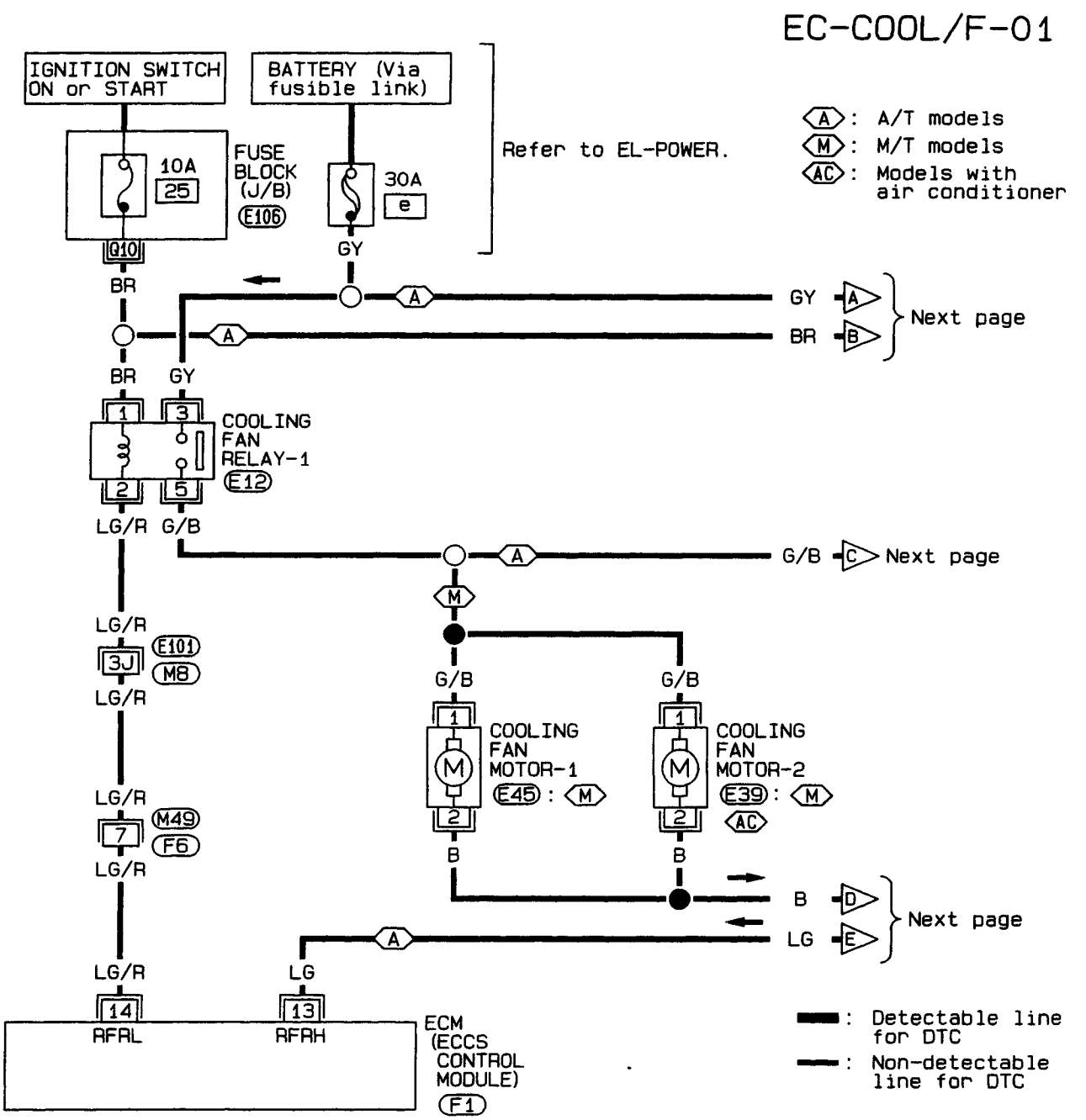

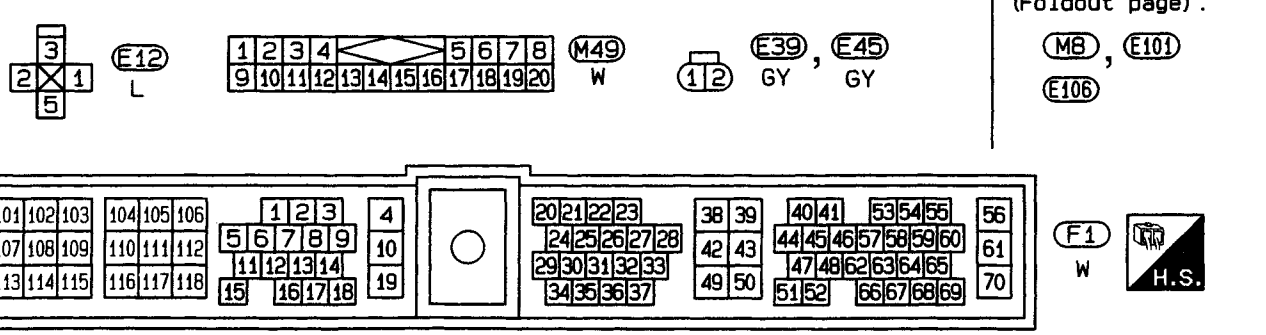

HEC076

Simpo PDF Merge and Split Unregistered Version - http://www.simpopdf.com

Cooling Fan Control (Cont'd)

GA16DE for Australia

EC-COOL/F-02

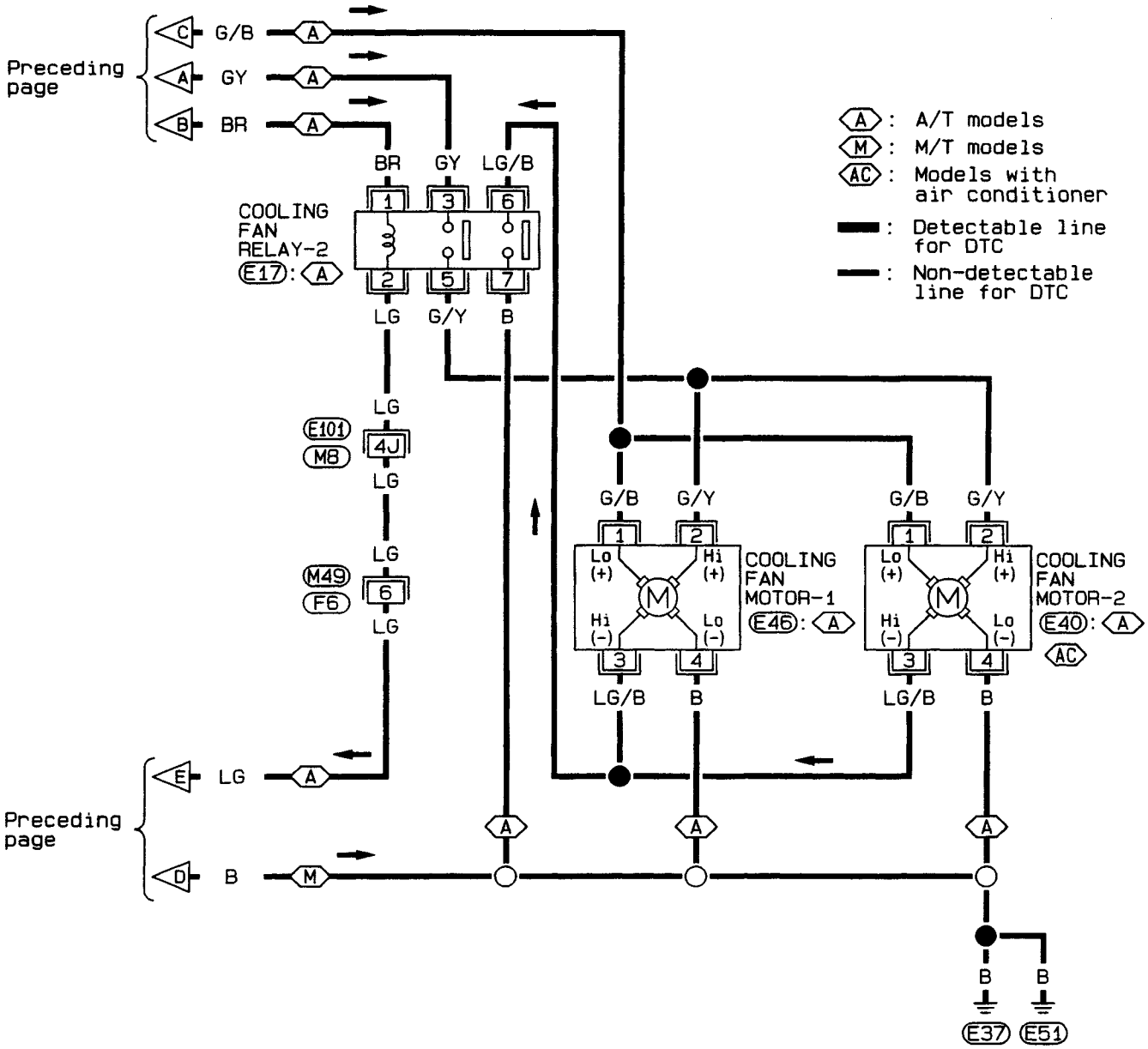

EC

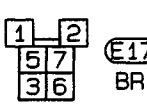

E17
BR



M49
W



E40, E46
GY GY

Refer to last page (Foldout page).

M8, E101

HEC077

Simpo PDF Merge and Split Unregistered Version - http://www.simpopdf.com

Cooling Fan Control (Cont'd)

DIAGNOSTIC PROCEDURE

A **With air conditioner**

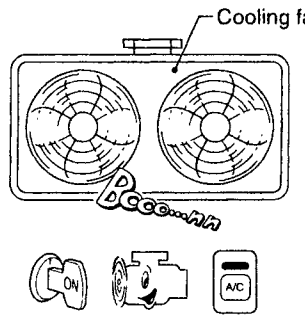

Without air conditioner

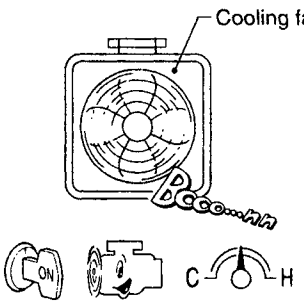

MEC340B

B

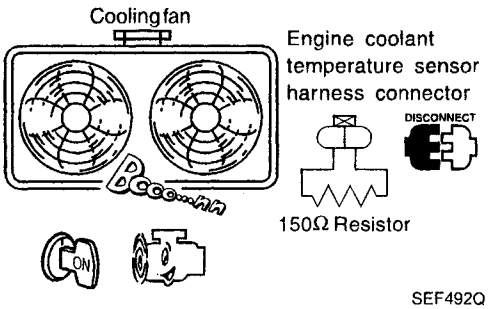

SEF492Q

INSPECTION START

A

CHECK COOLING FAN LOW SPEED OPERATION.

With air conditioner

1. Start engine.
2. Set temperature lever at full cold position.
3. Turn air conditioner switch "ON".
4. Turn blower fan switch "ON".
5. Run engine at idle for a few minutes with air conditioner operating.
6. Make sure that cooling fan operates at low speed.

Without air conditioner

1. Start engine.
2. Keep engine speed at about 2,000 rpm until engine is warmed up sufficiently.
3. Make sure that cooling fan begins to operate at low speed during warm-up.

NG → Check cooling fan low speed control circuit. (Go to PROCEDURE A .)

OK

B

CHECK COOLING FAN HIGH SPEED OPERATION.

1. Turn air conditioner switch "OFF".
2. Turn blower fan switch "OFF". (Steps 1) and 2) are only performed for models with air conditioner.)
3. Stop engine.
4. Disconnect engine coolant temperature sensor harness connector.
5. Connect 150Ω resistor to engine coolant temperature sensor harness connector.
6. Restart engine and make sure that cooling fan operates at high speed.

NG → Check cooling fan high speed control circuit. (Go to PROCEDURE B .)

OK

INSPECTION END

Simpo PDF Merge and Split Unregistered Version - http://www.simpopdf.com

Cooling Fan Control (Cont'd)

DIAGNOSTIC PROCEDURE

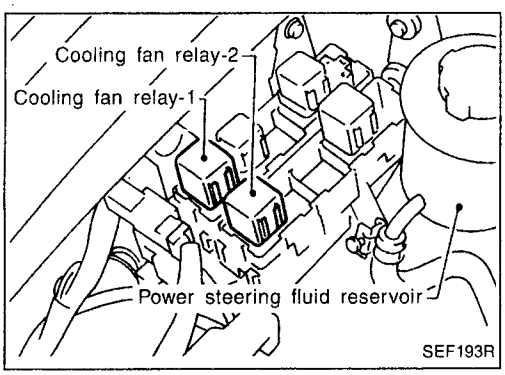

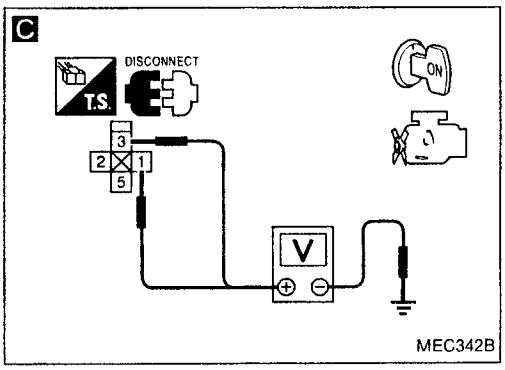

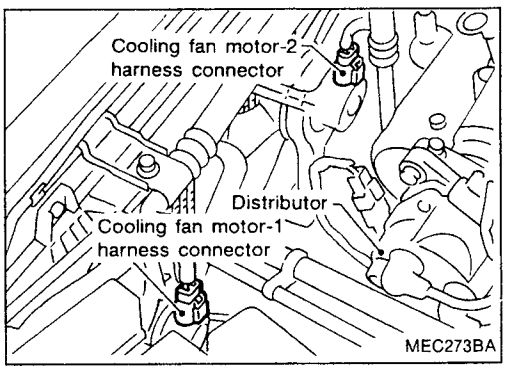

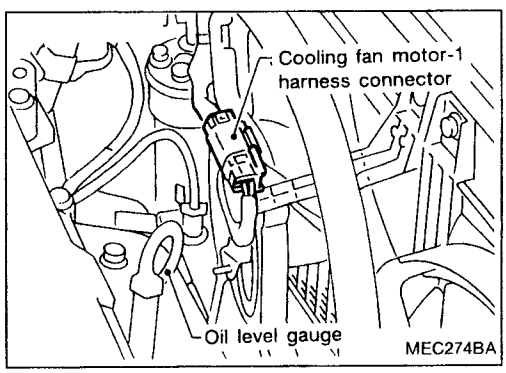

PROCEDURE A

INSPECTION START

C

CHECK POWER SUPPLY.
1. Stop engine.
2. Disconnect cooling fan relay-1.
3. Turn ignition switch "ON".
4. Check voltage between terminals ①, ③ and ground.
Voltage: Battery voltage

NG → Check the following.
- 10A fuse
- 30A fusible link
- Harness for open or short between cooling fan relay-1 and fuse
- Harness for open or short between cooling fan relay-1 and battery

If NG, repair harness or connectors.

OK ↓

CHECK GROUND CIRCUIT.
1. Turn ignition switch "OFF".
2. Disconnect cooling fan motor-1 harness connector and cooling fan motor-2 harness connector.

D 3. Check harness continuity between terminal ① and terminal ⑤.
Continuity should exist.
If OK, check harness for short.

E 4. Check harness continuity between terminal ② and body ground or terminal ④ and body ground.
Continuity should exist.
If OK, check harness for short.

NG → Repair harness or connectors.

OK ↓

Ⓐ

EC

Simpo PDF Merge and Split Unregistered Version - http://www.simpopdf.com

Cooling Fan Control (Cont'd)

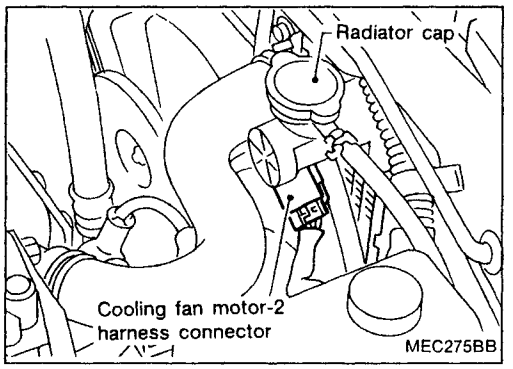

D

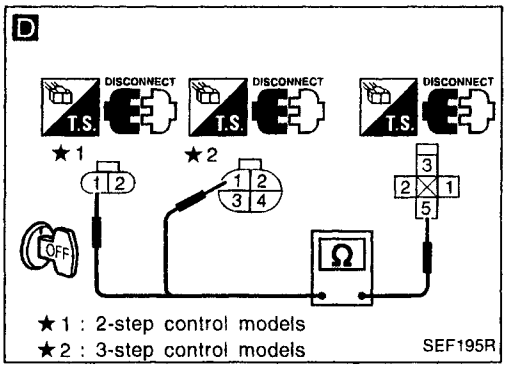

E

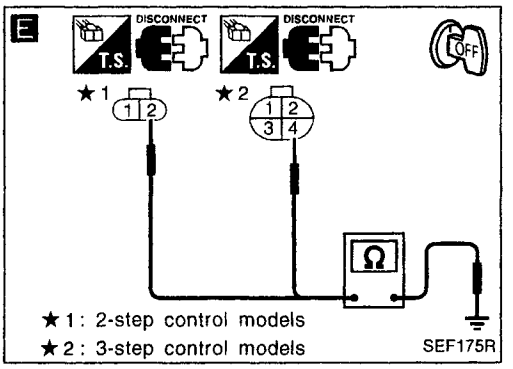

F

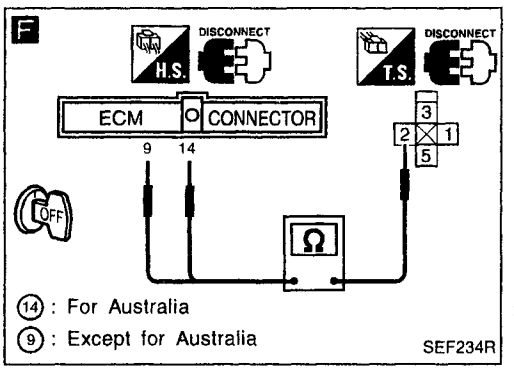

G

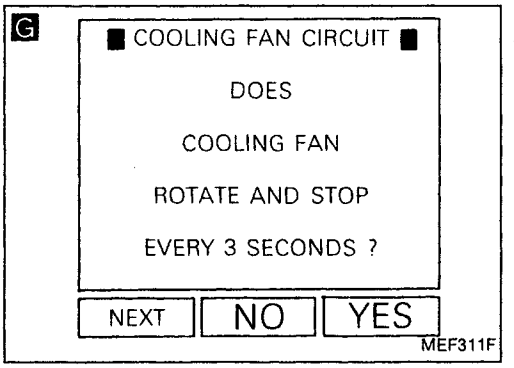

Ⓐ

F

CHECK OUTPUT SIGNAL CIRCUIT.
1. Disconnect ECM harness connector.
2. Check harness continuity between ECM terminal ⑨ or ⑭ and terminal ②.
Continuity should exist.

NG → Check the following.
- Harness connectors (F6), (M49)
- Harness connectors (M8), (E101)
- Harness for open or short between cooling fan relay-1 and ECM

If NG, repair harness or connectors.

OK ↓

CHECK COMPONENT
(Cooling fan relay-1).
Refer to "COMPONENT INSPECTION".
(See page EC-167.)

NG → Replace cooling fan relay.

OK ↓

G

CHECK COMPONENTS
(Cooling fan motors-1 and -2).

1. Reconnect cooling fan relay-1, cooling fan motor harness connectors and ECM harness connector.
2. Turn ignition switch "ON".
3. Perform "COOLING FAN CIRCUIT" in "FUNCTION TEST" mode with CONSULT.

OR

3. Perform "COOLING FAN" in "ACTIVE TEST" mode with CONSULT.

OR

Refer to " COMPONENT INSPECTION". (See page EC-167.)

NG → Replace cooling fan motors.

OK ↓

Disconnect and reconnect harness connectors in the circuit. Then retest.

Trouble is not fixed. ↓

Check ECM pin terminals for damage or the connection of ECM harness connector. Reconnect ECM harness connector and retest.

↓

INSPECTION END

Simpo PDF Merge and Split Unregistered Version - http://www.simpopdf.com

Cooling Fan Control (Cont'd)

G

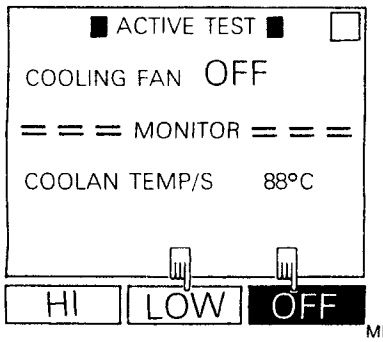

MEF313F

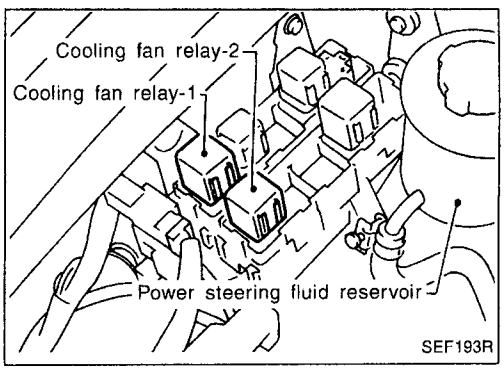

SEF193R

H

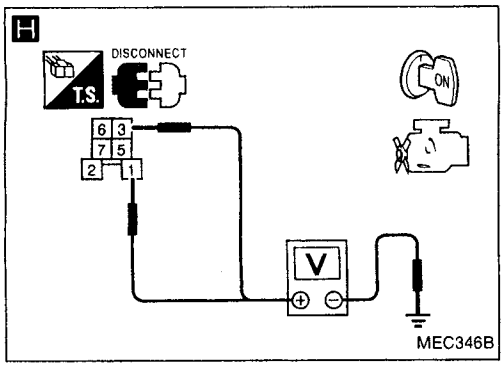

MEC346B

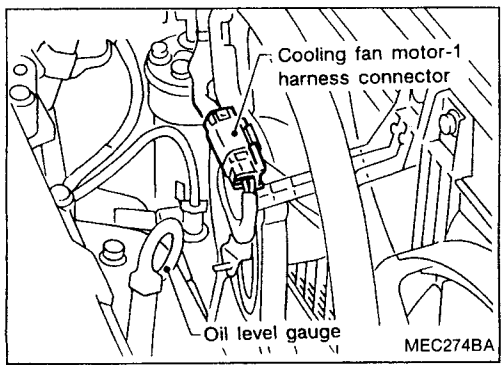

MEC274BA

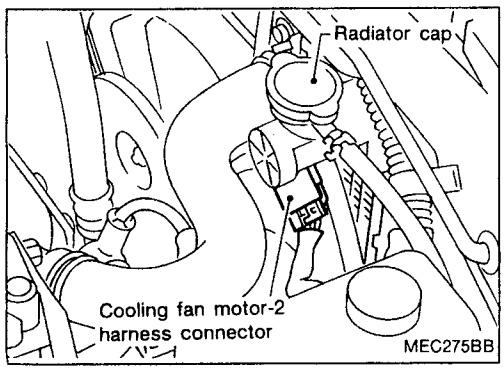

MEC275BB

PROCEDURE B

INSPECTION START

H

CHECK POWER SUPPLY.
1. Stop engine.
2. Disconnect cooling fan relay-2.
3. Turn ignition switch "ON".
4. Check voltage between terminals ①, ③ and ground.
Voltage: Battery voltage

NG → Check the following.
- Harness for open or short between cooling fan relay-2 and fuse
- Harness for open or short between cooling fan relay-2 and fusible link

If NG, repair harness or connectors.

OK ↓

CHECK GROUND CIRCUIT.
1. Turn ignition switch "OFF".
2. Disconnect cooling fan motor-1 harness connector and cooling fan motor-2 harness connector.

I 3. Check harness continuity between terminal ⑤ and terminal ②.
Continuity should exist.
If OK, check harness for short.

J 4. Check harness continuity between terminal ⑥ and terminal ③, terminal ⑦ and body ground.
Continuity should exist.
If OK, check harness for short.

NG → Repair harness or connectors.

OK ↓

K

CHECK OUTPUT SIGNAL CIRCUIT.
1. Disconnect ECM harness connector.
2. Check harness continuity between ECM terminal ⑬ or ⑩ and terminal ②.
Continuity should exist.
If OK, check harness for short.

NG → Check the following.
- Harness connectors (F6), (M49)
- Harness connectors (M8), (E101)
- Harness for open or short between ECM and cooling fan relay-2

If NG, repair harness or connectors.

OK ↓

⑧

EC

Simpo PDF Merge and Split Unregistered Version - http://www.simpopdf.com

Cooling Fan Control (Cont'd)

I

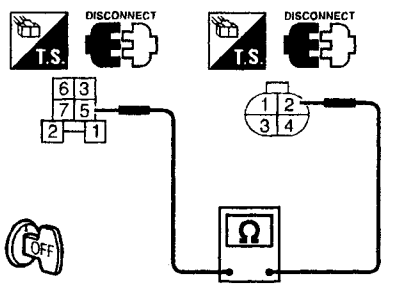

SEF226R

J

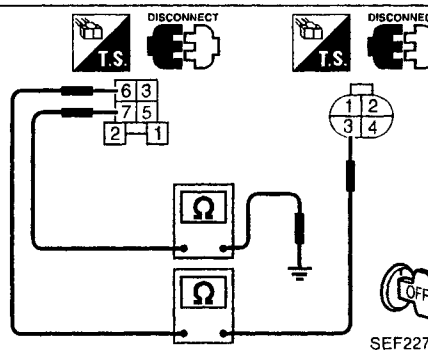

SEF227R

K

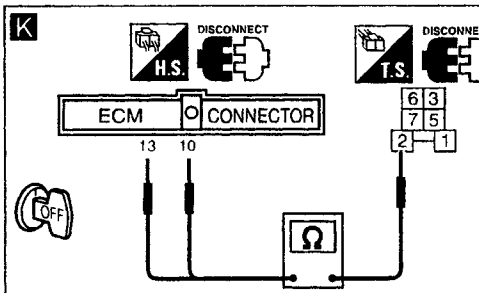

(13): For Australia
(10): Except for Australia

SEF196R

L

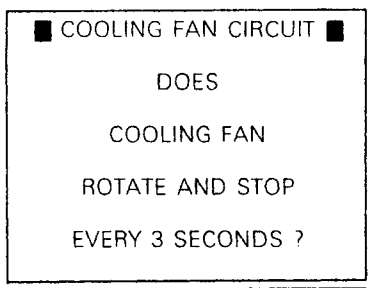

MEF311F

L

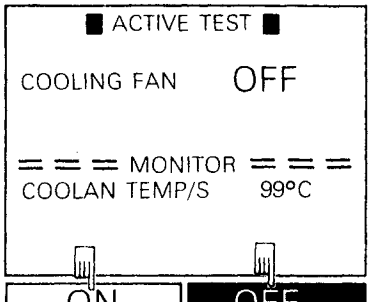

MEF312F

Ⓑ

CHECK COMPONENT
(Cooling fan relay-2).
Refer to "COMPONENT INSPECTION" on next page.

NG → Replace cooling fan relay.

OK

L

CHECK COMPONENTS
(Cooling fan motors-1 and -2).

1. Reconnect cooling fan relay-2, cooling fan motor harness connectors, engine coolant temperature sensor harness connector and ECM harness connector.
2. Turn ignition switch "ON".
3. Perform "COOLING FAN CIRCUIT" in "FUNCTION TEST" mode with CONSULT.

OR

3. Perform "COOLING FAN" in "ACTIVE TEST" mode with CONSULT.

OR

Refer to " COMPONENT INSPECTION" on next page.

NG → Replace cooling fan motors.

OK

Disconnect and reconnect harness connectors in the circuit. Then retest.

Trouble is not fixed.

Check ECM pin terminals for damage or the connection of ECM harness connector. Reconnect ECM harness connector and retest.

INSPECTION END

Simpo PDF Merge and Split Unregistered Version - http://www.simpopdf.com

Cooling Fan Control (Cont'd)

COMPONENT INSPECTION

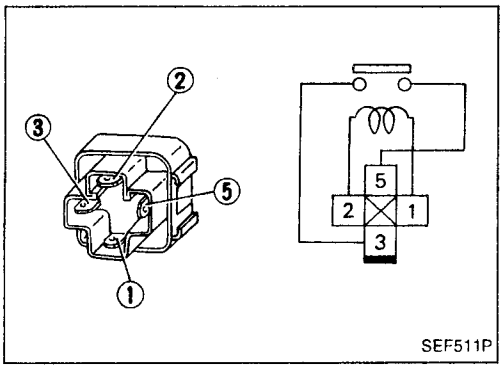

SEF511P

Cooling fan relay-1

Check continuity between terminals ③ and ⑤.

Conditions	Continuity
12V direct current supply between terminals ① and ②	Yes
No current supply	No

If NG, replace relay.

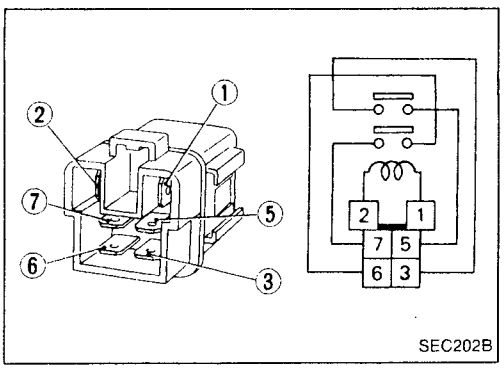

SEC202B

Cooling fan relay-2

Check continuity between terminals ③ and ⑤, ⑥ and ⑦.

Conditions	Continuity
12V direct current supply between terminals ① and ②	Yes
No current supply	No

If NG, replace relay.

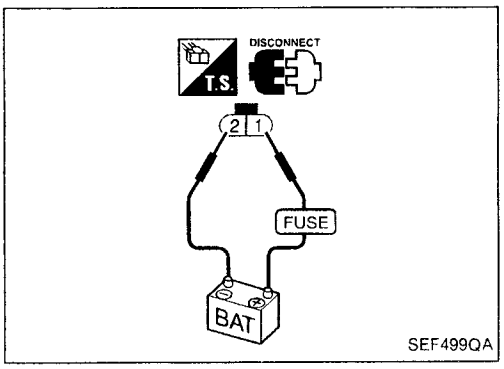

SEF499QA

Cooling fan motors-1 and -2

M/T models:

1. Disconnect cooling fan motor harness connectors.
2. Supply cooling fan motor terminals with battery voltage and check operation.

	Terminals	
	(⊕)	(⊖)
Cooling fan motor	①	②

Cooling fan motor should operate.

If NG, replace cooling fan motor.

EC

Simpo PDF Merge and Split Unregistered Version - http://www.simpopdf.com

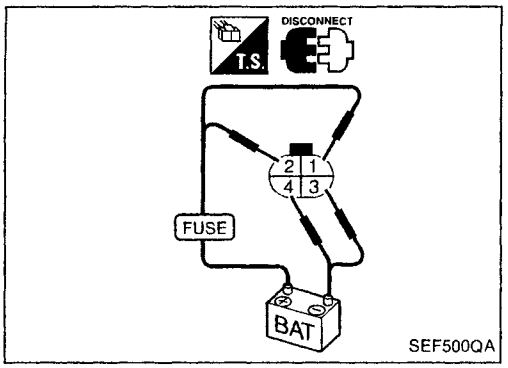

Cooling Fan Control (Cont'd)

A/T models for Australia and LHD A/T models for Europe without daytime light system

1. Disconnect cooling fan motor harness connectors.
2. Supply cooling fan motor terminals with battery voltage and check operation.

	Speed	Terminals	
		(⊕)	(⊖)
Cooling fan motor-1	Low	①	④
	High	②	③
Cooling fan motor-2	Low	①	④
	High	②	③

Cooling fan motor should operate.
If NG, replace cooling fan motor.

Simpo PDF Merge and Split Unregistered Version - http://www.simpopdf.com

Power Steering Oil Pressure Switch

EC-PST/SW-01

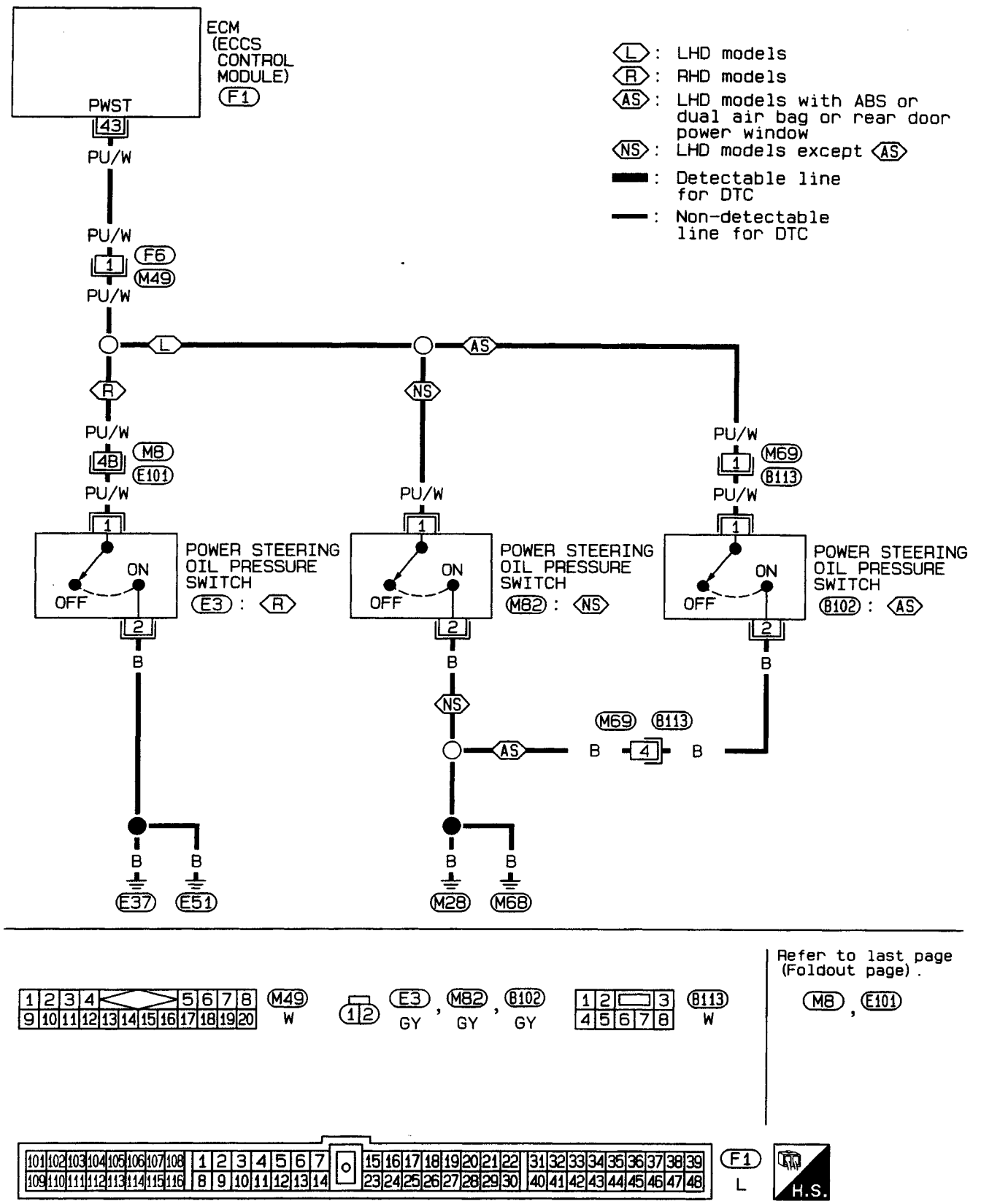

HEC046

Simpo PDF Merge and Split Unregistered Version - http://www.simpopdf.com

Power Steering Oil Pressure Switch (Cont'd)

GA16DE for Australia

EC-PST/SW-01

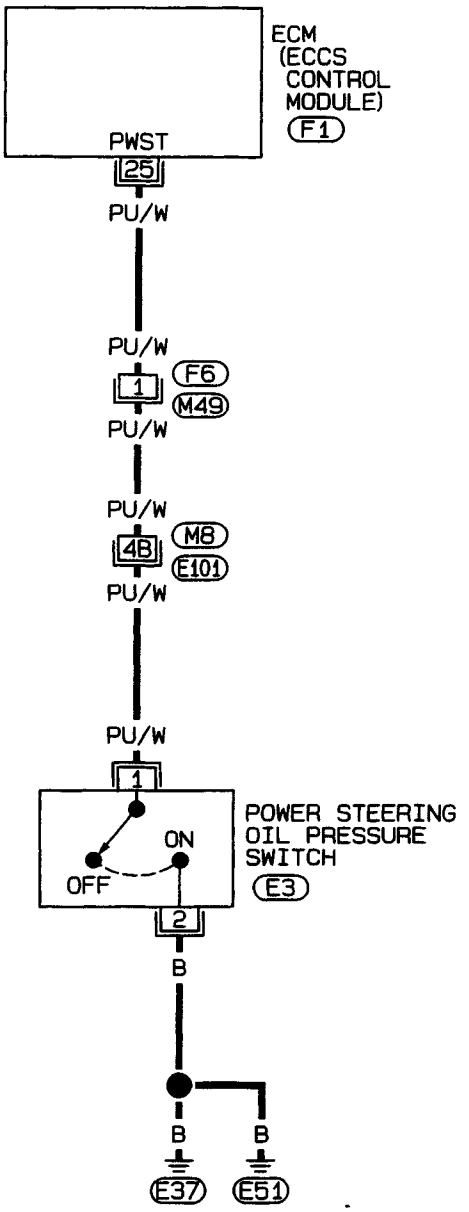

: Detectable line for DTC

: Non-detectable line for DTC



M49
W

E3
GY

Refer to last page
(Foldout page).

M8, E101

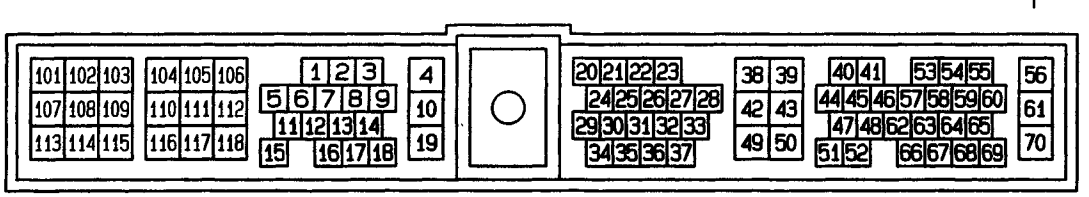

F1
W



HEC078

Simpo PDF Merge and Split Unregistered Version - http://www.simpopdf.com

Power Steering Oil Pressure Switch (Cont'd)

COMPONENT DESCRIPTION

The power steering oil pressure switch is attached to the power steering high-pressure tube and detects a power steering load. When a power steering load is detected, it signals the ECM. The ECM adjusts the IACV-AAC valve to increase the idle speed and adjust for the increased load.

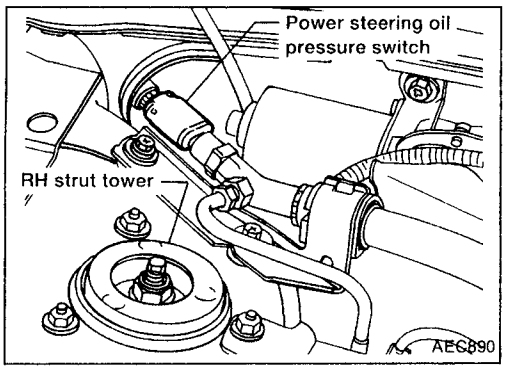

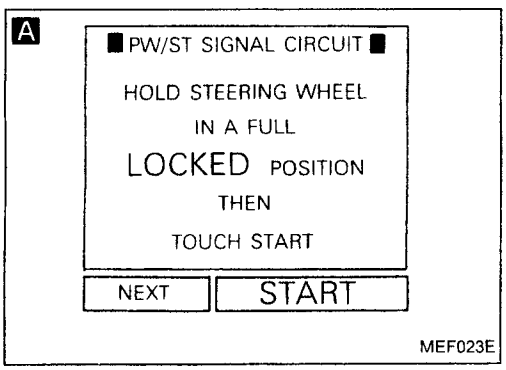

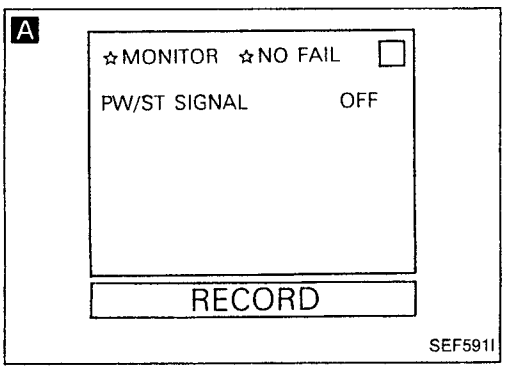

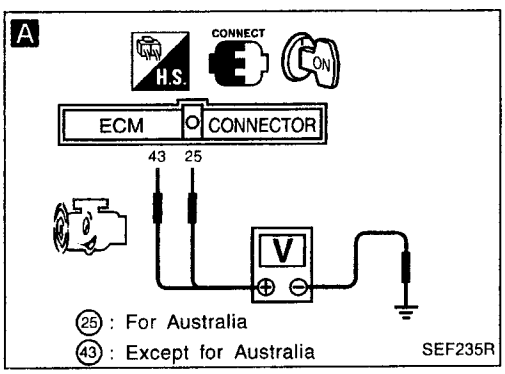

DIAGNOSTIC PROCEDURE

INSPECTION START

A

CHECK OVERALL FUNCTION.

1. Turn ignition switch "ON".
2. Perform "PW/ST SIGNAL CIRCUIT" in "FUNCTION TEST" mode with CONSULT.

OR

1. Start engine.
2. Check "PW/ST SIGNAL" in "DATA MONITOR" mode with CONSULT.

Steering is in neutral position:
OFF
Steering is turned:
ON

OR

1. Start engine.
2. Check voltage between ECM terminal 43 or 25 and ground.

Voltage:
When steering wheel is turned quickly.
Approximately 0V
Except above
Approximately 5V

OK → INSPECTION END

NG → Ⓐ

EC

Simpo PDF Merge and Split Unregistered Version - http://www.simpopdf.com

Power Steering Oil Pressure Switch (Cont'd)

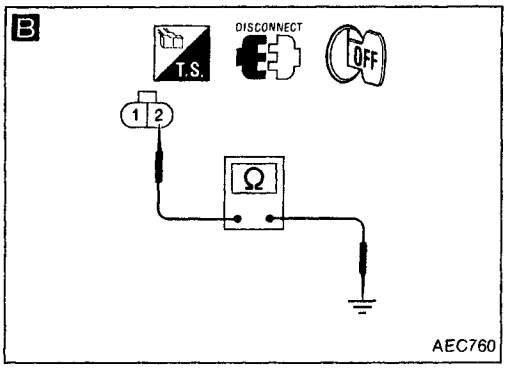

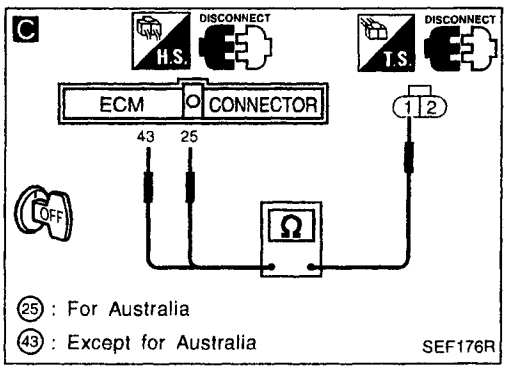

Ⓐ

B

CHECK GROUND CIRCUIT.
1. Turn ignition switch "OFF".
2. Disconnect power steering oil pressure switch harness connector.
3. Check harness continuity between terminal ② and engine ground.
   Continuity should exist.
   If OK, check harness for short.

NG → Repair harness or connectors.

OK ↓

C

CHECK INPUT SIGNAL CIRCUIT.
1. Disconnect ECM harness connector.
2. Check harness continuity between ECM terminal ㊸ or ㉕ and terminal ①.
   Continuity should exist.
   If OK, check harness for short.

NG → Check the following.
- Harness connectors (F6), (M49)
- Harness connectors (M8), (E101) or (M69), (B113)
- Harness for open or short between ECM and power steering oil pressure switch

If NG, repair harness or connectors.

OK ↓

CHECK COMPONENT
(Power steering oil pressure switch).
Refer to "COMPONENT INSPECTION" below.

NG → Replace power steering oil pressure switch.

OK ↓

Disconnect and reconnect harness connectors in the circuit. Then retest.

Trouble is not fixed. ↓

Check ECM pin terminals for damage or the connection of ECM harness connector. Reconnect ECM harness connector and retest.

↓

INSPECTION END

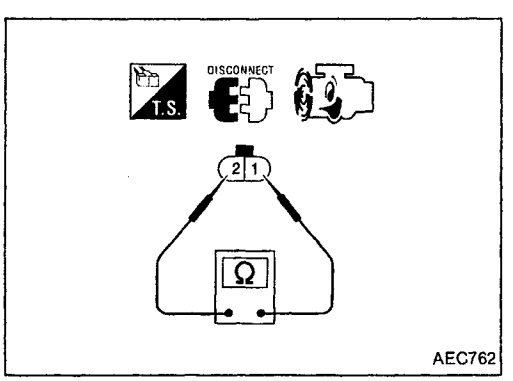

COMPONENT INSPECTION

Power steering oil pressure switch

1. Disconnect power steering oil pressure switch harness connector then start engine.
2. Check continuity between terminals ① and ②.

Conditions	Continuity
Steering wheel is being turned	Yes
Steering wheel is not being turned	No

If NG, replace power steering oil pressure switch.

Simpo PDF Merge and Split Unregistered Version - http://www.simpopdf.com

Park/Neutral Position Switch

EC-PNP/SW-01

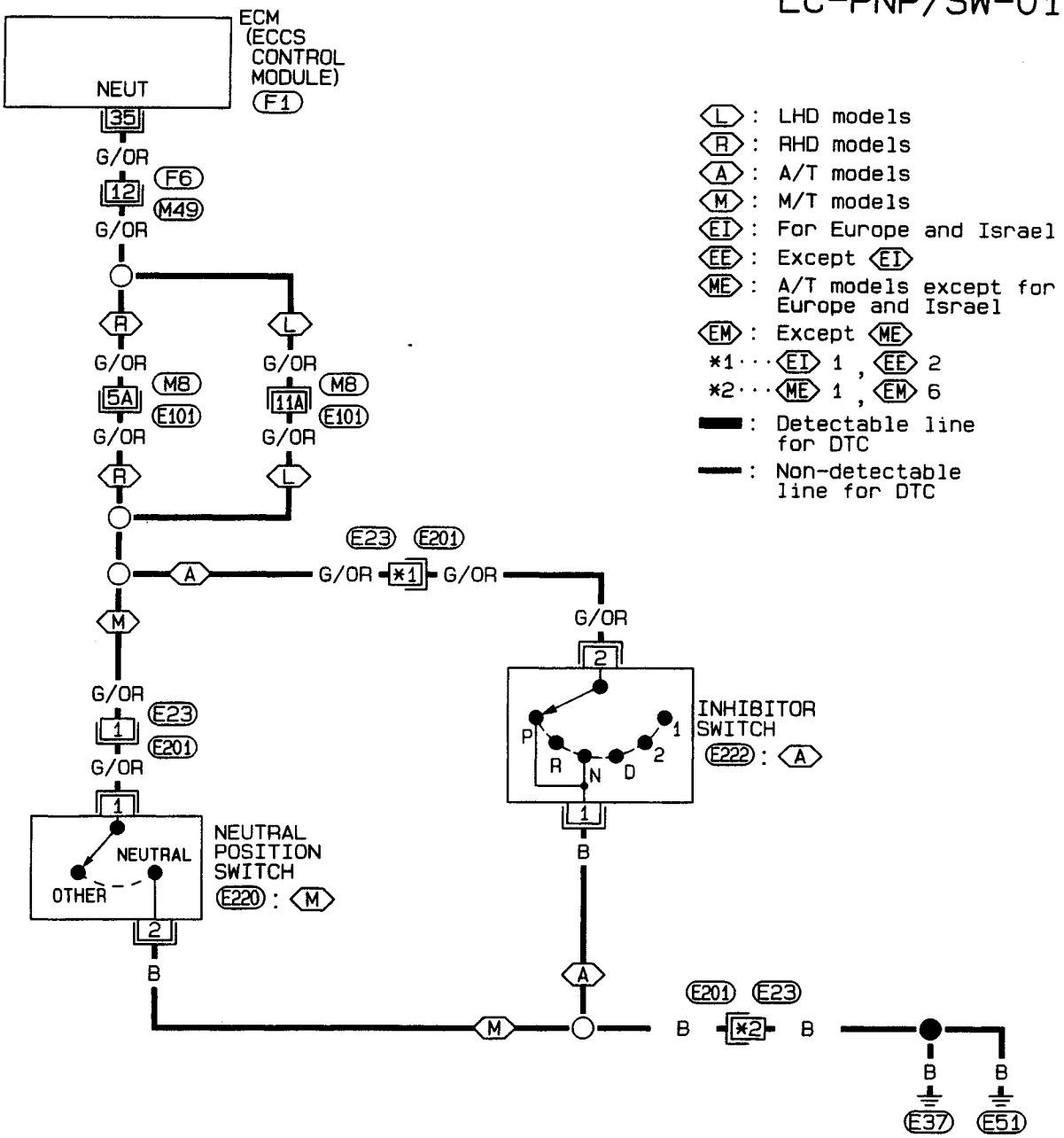

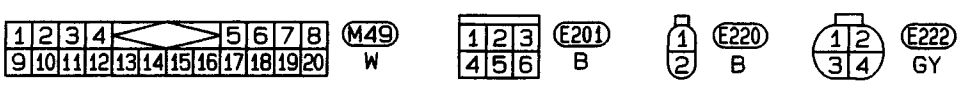

Refer to last page (Foldout page).

M8, E101

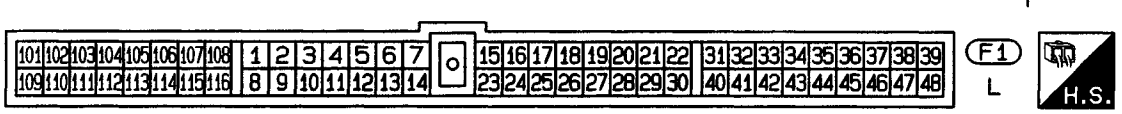

HEC047

Simpo PDF Merge and Split Unregistered Version - http://www.simpopdf.com

Park/Neutral Position Switch (Cont'd)

GA16DE for Australia

EC-PNP/SW-01

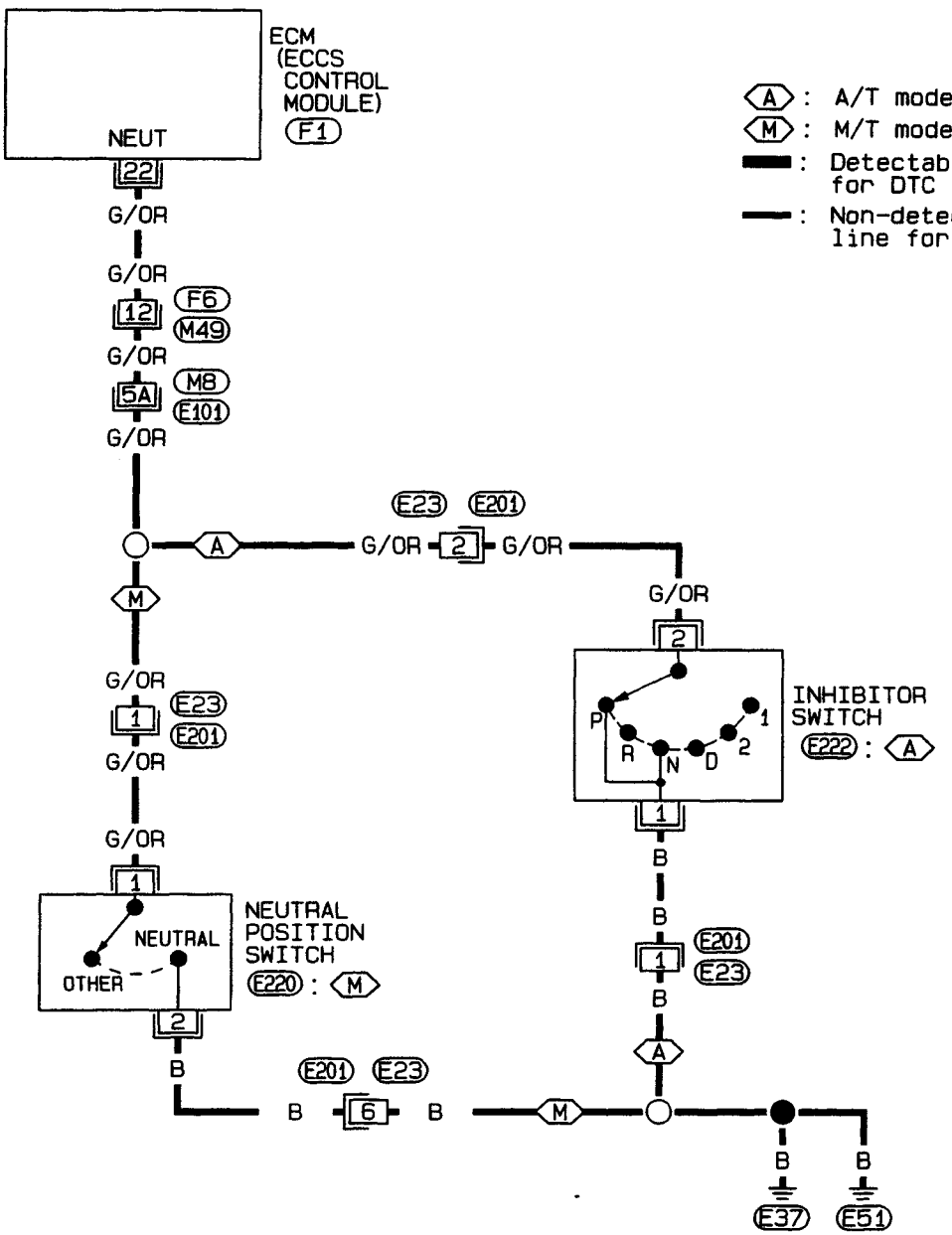

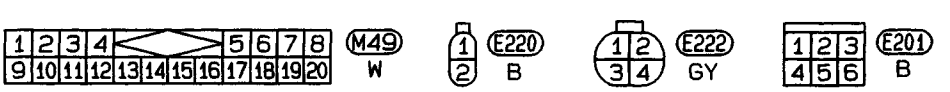

Refer to last page
(Foldout page).

M8, E101

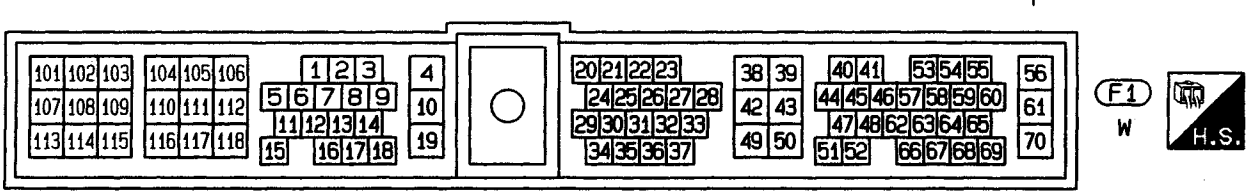

HEC079

Simpo PDF Merge and Split Unregistered Version - http://www.simpopdf.com

Park/Neutral Position Switch (Cont'd)

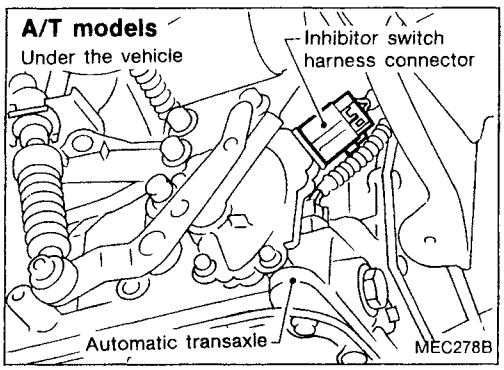

When the gear position is "P" (A/T models only) or "N", park/neutral position switch is "ON".
ECM detects the park/neutral position when continuity with ground exists.

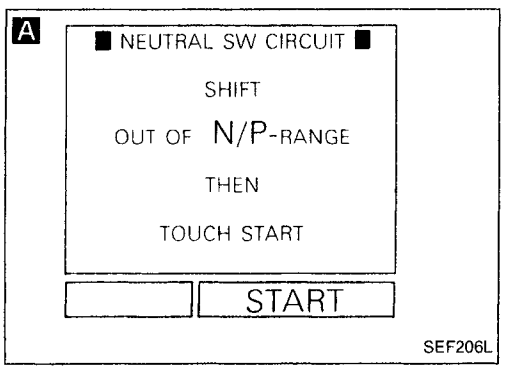

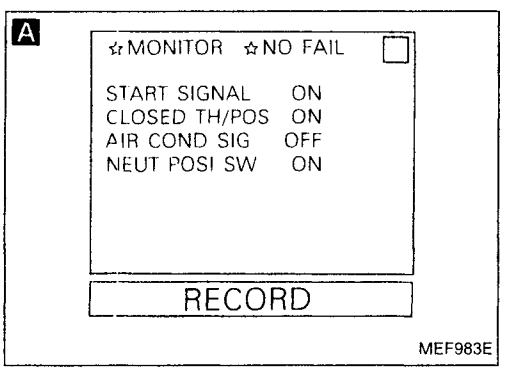

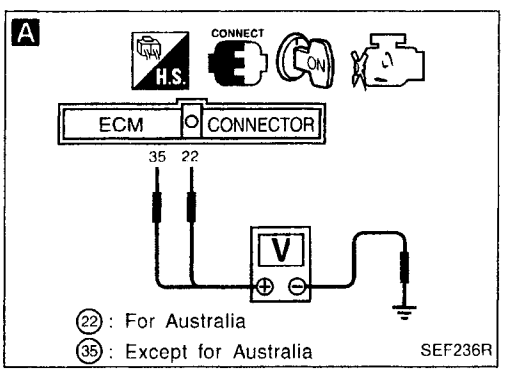

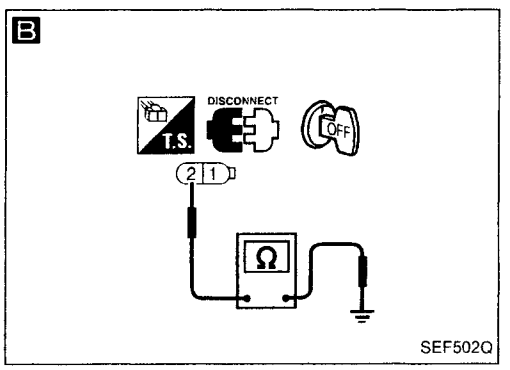

DIAGNOSTIC PROCEDURE

Neutral position switch

INSPECTION START

A

CHECK OVERALL FUNCTION.
1. Turn ignition switch "ON".
2. Perform "NEUTRAL SW CIRCUIT" or "NEUTRAL POSI SW CKT" in "FUNCTION TEST" mode with CONSULT.

OK → INSPECTION END

OR

2. Check "NEUTRAL SW" or "NEUT POSI SW" signal in "DATA MONITOR" mode with CONSULT.
Neutral position: ON
Except above: OFF

OR

1. Set shift lever to the neutral position.
2. Disconnect ECM harness connector.
3. Check harness continuity between ECM terminal (35) or (22) and body ground.
Continuity should exist.
If OK, check harness for short.

NG

Turn ignition switch "OFF".

B

CHECK GROUND CIRCUIT.
1. Disconnect neutral position switch harness connector.
2. Check harness continuity between terminal (2) and body ground.
Continuity should exist.
If OK, check harness for short.

NG → Check the following.
- Harness connectors (E23), (E201)
- Harness for open or short between neutral position switch and body ground

If NG, repair harness or connectors.

OK → (A)

EC

Simpo PDF Merge and Split Unregistered Version - http://www.simpopdf.com

Park/Neutral Position Switch (Cont'd)

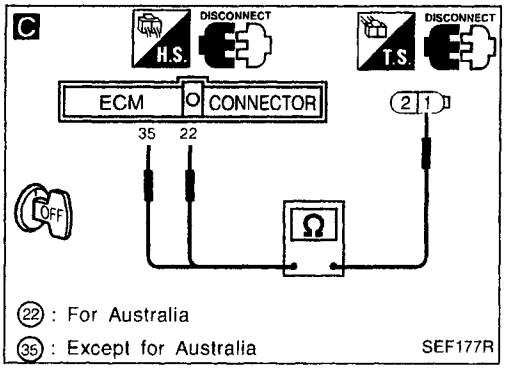

Ⓐ

Disconnect ECM harness connector.

C

CHECK INPUT SIGNAL CIRCUIT.
1. Check harness continuity between ECM terminal ㉟ or ㉒ and terminal ①.
Continuity should exist.
If OK, check harness for short.

NG → Check the following.
- Harness connectors (F6), (M49)
- Harness connectors (M8), (E101)
- Harness connectors (E23), (E201)
- Harness for open or short between ECM and neutral position switch

If NG, repair harness or connectors.

OK ↓

CHECK COMPONENT
(Neutral position switch).
Refer to "Check of Position Switch" of "ON-VEHICLE SERVICE" in MT section.

NG → Replace neutral position switch.

OK ↓

Disconnect and reconnect harness connectors in the circuit. Then retest.

Trouble is not fixed. ↓

Check ECM pin terminals for damage or the connection of ECM harness connector. Reconnect ECM harness connector and retest.

↓

INSPECTION END

Simpo PDF Merge and Split Unregistered Version - http://www.simpopdf.com

Park/Neutral Position Switch (Cont'd)

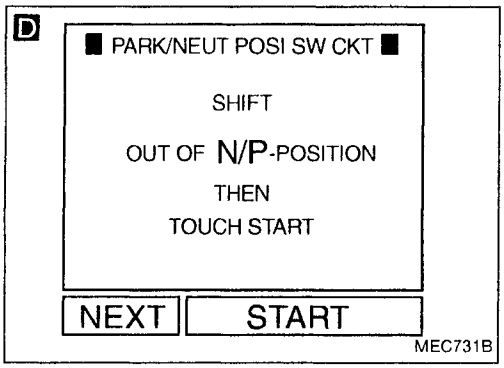

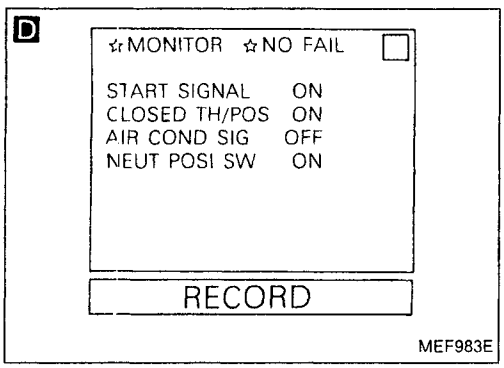

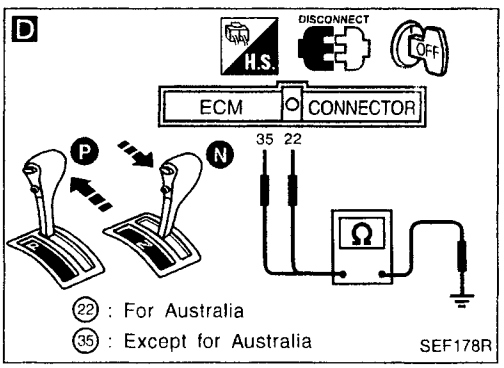

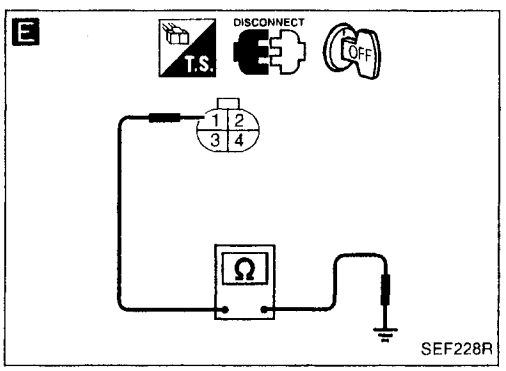

Inhibitor switch

INSPECTION START

D

CHECK OVERALL FUNCTION.

1. Turn ignition switch "ON".
2. Perform "NEUTRAL POSI SW CKT" in "FUNCTION TEST" mode with CONSULT.

OK → INSPECTION END

OR

2. Check "NEUTRAL SW" or "NEUT POSI SW" signal in "DATA MONITOR" mode with CONSULT.
   "N" or "P": ON
   Except above: OFF

OR

1. Shift selector lever to "P" position.
2. Disconnect ECM harness connector.
3. Check harness continuity between ECM terminal ㉟ or ㉒ and body ground.
   Continuity should exist.
   If OK, check harness for short.
4. Shift selector lever to "N" position.
5. Check harness continuity between ECM terminal ㉟ or ㉒ and body ground.
   Continuity should exist.
   If OK, check harness for short.

NG

Turn ignition switch "OFF".

E

CHECK GROUND CIRCUIT.

1. Disconnect inhibitor switch harness connector.
2. Check harness continuity between terminal ① and body ground.
   Continuity should exist.
   If OK, check harness for short.

NG → Check the following.
- Harness connectors E23, E201
- Harness for open or short between inhibitor switch and body ground

If NG, repair harness or connectors.

OK

Disconnect ECM harness connector.

Ⓐ

EC

Simpo PDF Merge and Split Unregistered Version - http://www.simpopdf.com

Park/Neutral Position Switch (Cont'd)

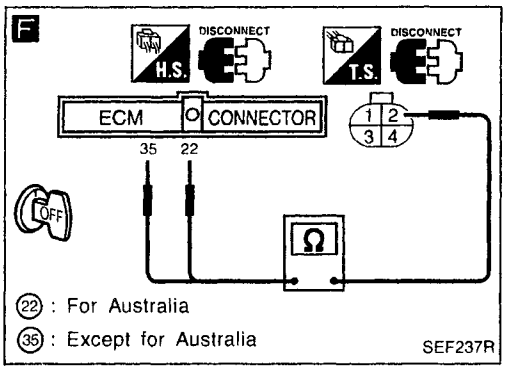

Ⓐ

F

CHECK INPUT SIGNAL CIRCUIT.
1. Check harness continuity between ECM terminal 35 or 22 and terminal 2.
Continuity should exist.
If OK, check harness for short.

NG → Check the following.
- Harness connectors F6, M49
- Harness connectors M8, E101
- Harness connectors E23, E201
- Harness for open or short between ECM and inhibitor switch

If NG, repair harness or connectors.

OK ↓

CHECK COMPONENT (Inhibitor switch).
Refer to "Electrical Components Inspection" of "TROUBLE DIAGNOSES" in AT section.

NG → Replace inhibitor switch.

OK ↓

Disconnect and reconnect harness connectors in the circuit. Then retest.

Trouble is not fixed. ↓

Check ECM pin terminals for damage or the connection of ECM harness connector. Reconnect ECM harness connector and retest.

↓

INSPECTION END

Simpo PDF Merge and Split Unregistered Version - http://www.simpopdf.com

EVAP Canister Purge Control Solenoid Valve

GA16DE M/T models except for Europe, Israel and Australia

SYSTEM DESCRIPTION

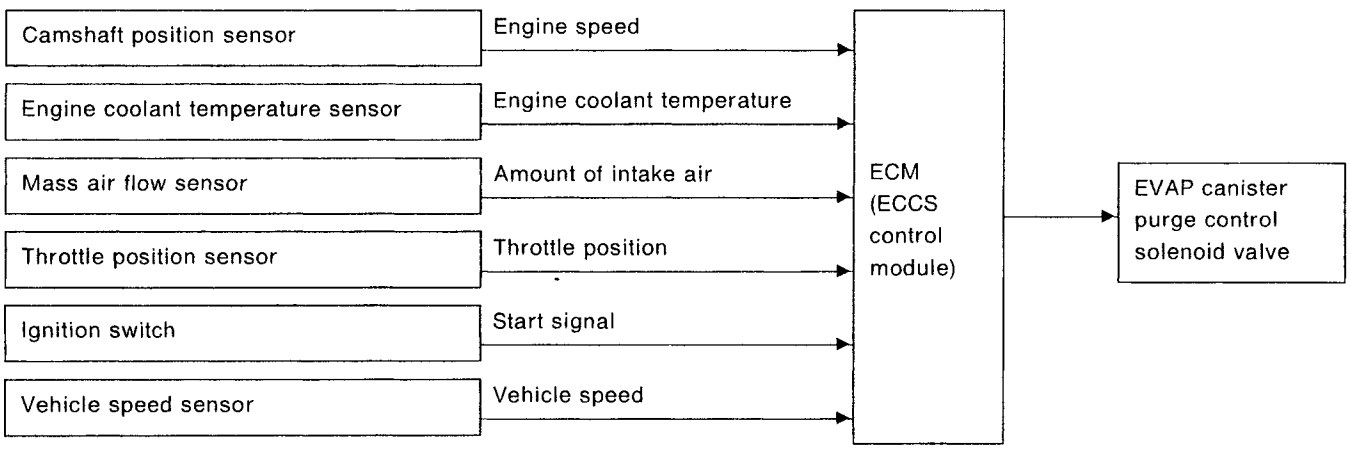

EC

This system cuts and controls the port vacuum applied to the EVAP canister purge control solenoid valve to suit engine operating conditions.
This cut-and-control operation is accomplished through the ECM. When the ECM detects any of the following conditions, current flows through the solenoid valve in the EVAP canister purge control solenoid valve control vacuum line.

This causes the port vacuum to be discharged into the atmosphere so that the EVAP canister purge line remains closed.

- Engine starting
- Closed throttle position
- Low and high engine coolant temperature
- During deceleration
- Engine stopped
- Vehicle speed: below 10 km/h (6 MPH)
- Mass air flow sensor malfunction

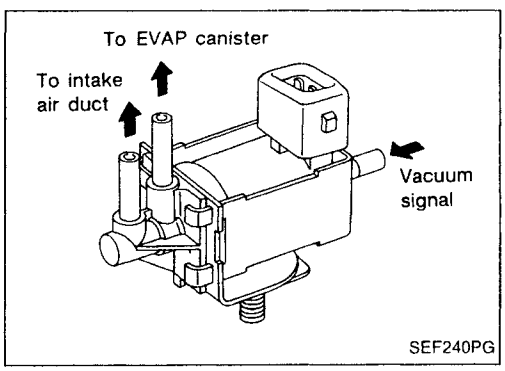

COMPONENT DESCRIPTION

The EVAP canister purge control solenoid valve responds to signals from the ECM. When the ECM sends an ON (ground) signal, the coil in the solenoid valve is energized. A plunger will then move to cut the vacuum signal (from the intake manifold to the EVAP canister purge control solenoid valve).
When the ECM sends an OFF signal, the vacuum signal passes through the solenoid valve. The signal then reaches the EVAP canister purge control solenoid valve.

Simpo PDF Merge and Split Unregistered Version - http://www.simpopdf.com

EVAP Canister Purge Control Solenoid Valve (Cont'd)

M/T models except for Europe and Israel

EC-PGC/V-01

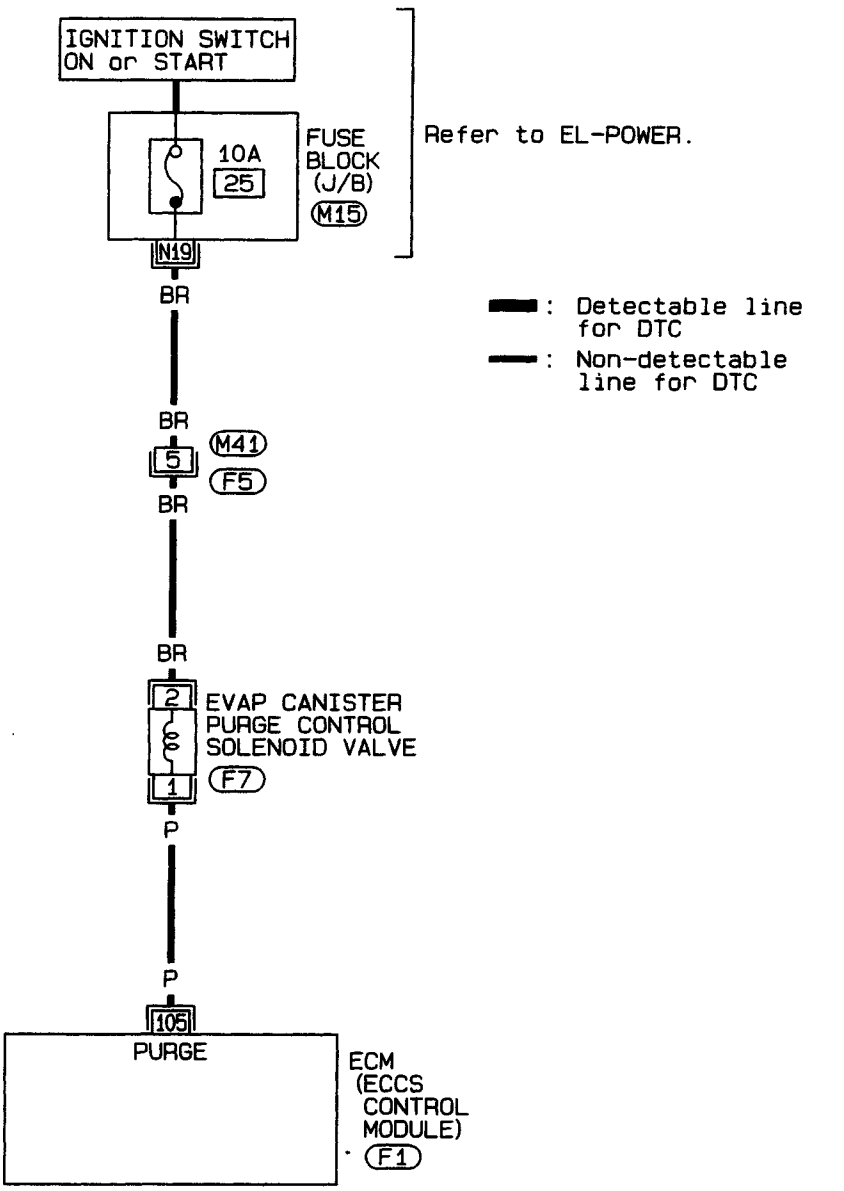

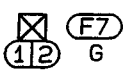

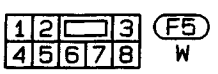

Refer to last page (Foldout page).

M15

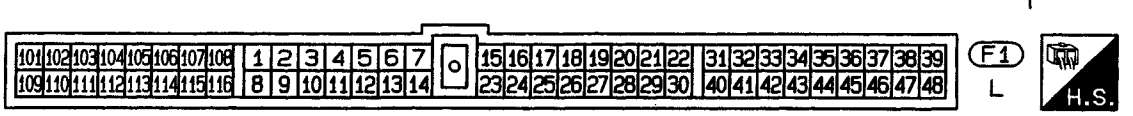

HEC041

Simpo PDF Merge and Split Unregistered Version - http://www.simpopdf.com

EVAP Canister Purge Control Solenoid Valve (Cont'd)

DIAGNOSTIC PROCEDURE

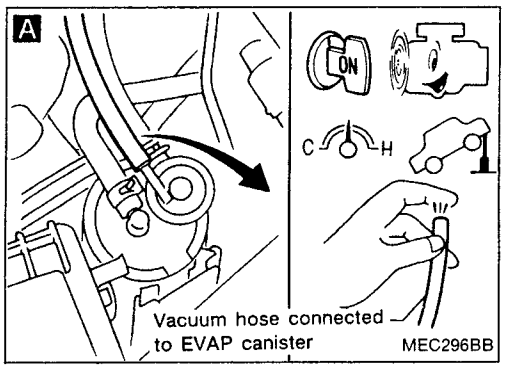

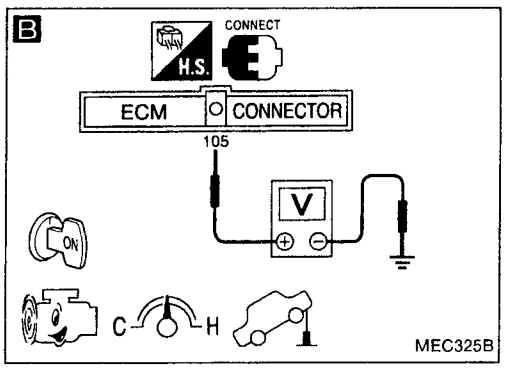

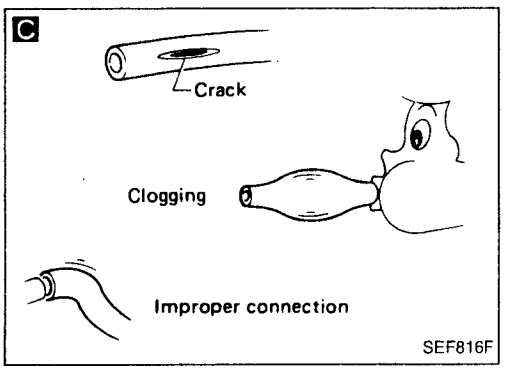

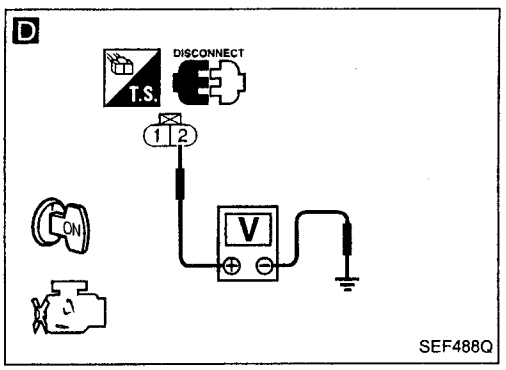

INSPECTION START

A

CHECK VACUUM SOURCE TO EVAP CANISTER.
1. Jack up drive wheels.
2. Start engine and warm it up sufficiently.
3. Perform diagnostic test mode II (Self-diagnostic results). Make sure that diagnostic trouble code No. 55 is displayed.
4. Disconnect vacuum hose to EVAP canister.
5. Set shift lever to 1st position.
6. Make sure that vacuum exists under the following conditions.

At idle:
Vacuum should not exist.
Racing engine from idle to 3,000 rpm:
Vacuum should exist.

OK → CHECK COMPONENT (EVAP canister). (See page EC-29.) If NG, replace EVAP canister.

NG

B

CHECK CONTROL FUNCTION.
1. Check voltage between ECM terminal (105) and ground with CONSULT or tester under the following conditions.

Voltage:
At idle
Approximately 0V
Engine speed is about 2,000 rpm
Battery voltage

OK → **C** Check vacuum hose for clogging, cracks or improper connection.

NG

D

CHECK POWER SUPPLY.
1. Stop engine.
2. Disconnect EVAP canister purge control solenoid valve harness connector.
3. Turn ignition switch "ON".
4. Check voltage between terminal ② and ground with CONSULT or tester.

Voltage: Battery voltage

NG → Check the following.
- Harness connectors (F5), (M41)
- 10A fuse
- Harness for open or short between EVAP canister purge control solenoid valve and fuse

If NG, repair harness or connectors.

OK

Ⓐ

EC

Simpo PDF Merge and Split Unregistered Version - http://www.simpopdf.com

EVAP Canister Purge Control Solenoid Valve (Cont'd)

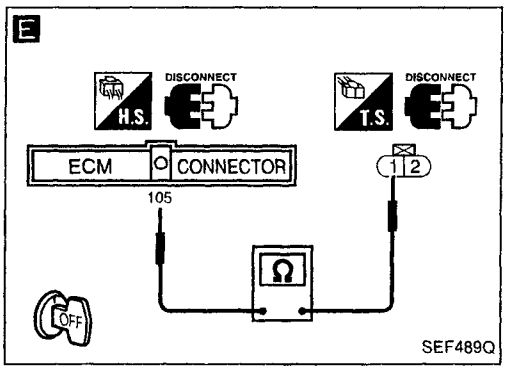

Ⓐ

E

CHECK OUTPUT SIGNAL CIRCUIT.
1. Turn ignition switch "OFF".
2. Disconnect ECM harness connector.
3. Check harness continuity between ECM terminal (105) and terminal ①.
Continuity should exist.
If OK, check harness for short.

NG → Repair harness or connectors.

OK ↓

CHECK COMPONENT
(EVAP canister purge control solenoid valve).
Refer to "COMPONENT INSPECTION".

NG → Replace EVAP canister purge control solenoid valve.

OK ↓

Disconnect and reconnect harness connectors in the circuit. Then retest.

Trouble is not fixed. ↓

Check ECM pin terminals for damage or the connection of ECM harness connector. Reconnect ECM harness connector and retest.

↓

INSPECTION END

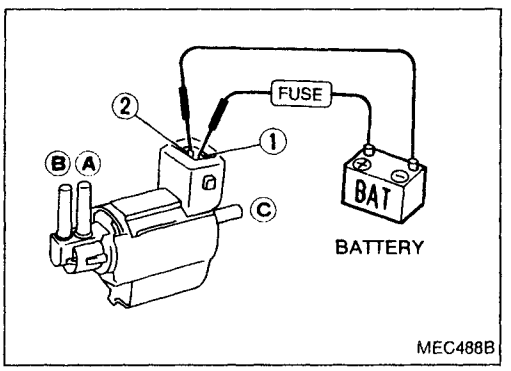

COMPONENT INSPECTION

EVAP canister purge control solenoid valve

Check air passage continuity.

Condition	Air passage continuity between Ⓐ and Ⓑ	Air passage continuity between Ⓐ and Ⓒ
12V direct current supply between terminals ① and ②	Yes	No
No supply	No	Yes

If NG, replace solenoid valve.

Simpo PDF Merge and Split Unregistered Version - http://www.simpopdf.com

EGR Valve and EVAP Canister Purge Control Solenoid Valve

For Europe, Israel and Australia, and GA15DE M/T models

SYSTEM DESCRIPTION

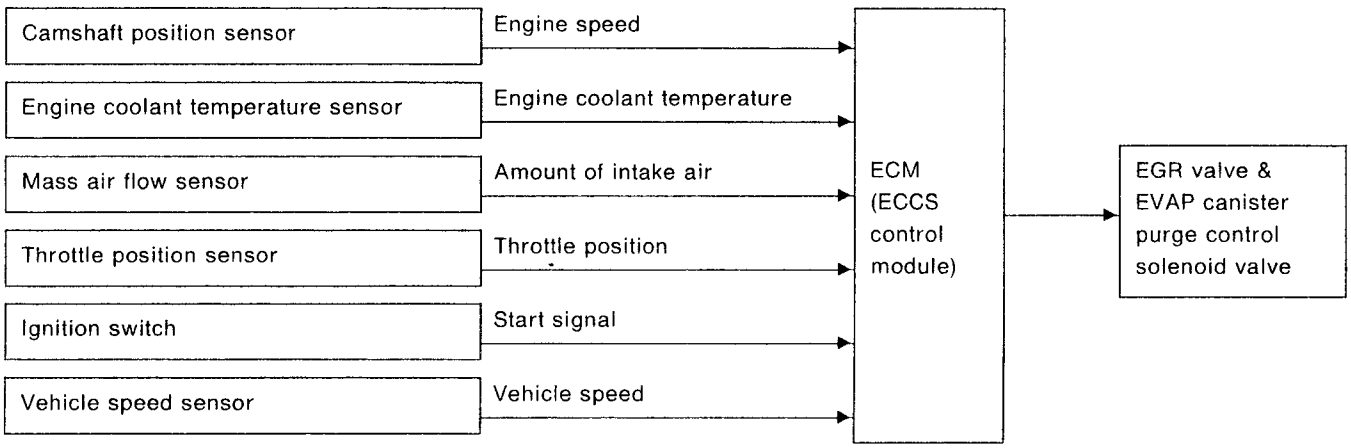

EC

This system cuts and controls the port vacuum applied to the EGR valve and EVAP canister purge control solenoid valve to suit engine operating conditions.
This cut-and-control operation is accomplished through the ECM. When the ECM detects any of the following conditions, current flows through the solenoid valve in the EGR valve and EVAP canister purge control solenoid valve control vacuum line.

This causes the port vacuum to be discharged into the atmosphere so that the EGR valve and EVAP canister purge line remains closed.

- Engine starting
- Closed throttle position
- Low and high engine coolant temperature
- During deceleration
- Engine stopped
- Vehicle speed: below 10 km/h (6 MPH)
- Mass air flow sensor malfunction

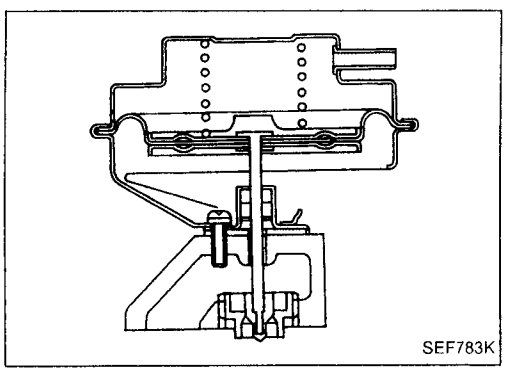

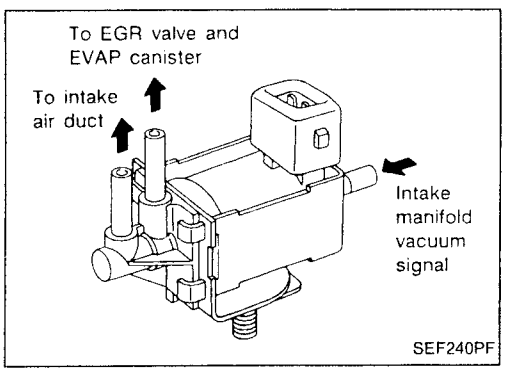

COMPONENT DESCRIPTION

Exhaust gas recirculation (EGR) valve

The EGR valve controls the amount of exhaust gas routed to the intake manifold. Vacuum is applied to the EGR valve in response to throttle valve opening. The vacuum controls the movement of a taper valve connected to the vacuum diaphragm in the EGR valve.

EGR valve and EVAP canister purge control solenoid valve

The EGR valve and EVAP canister purge control solenoid valve responds to signals from the ECM. When the ECM sends an ON (ground) signal, the coil in the solenoid valve is energized. A plunger will then move to cut the vacuum signal (from the throttle body to the EGR valve and EVAP canister purge valve). When the ECM sends an OFF signal, the vacuum signal passes through the solenoid valve. The signal then reaches the EGR valve and EVAP canister.

Simpo PDF Merge and Split Unregistered Version - http://www.simpopdf.com

EGR Valve and EVAP Canister Purge Control Solenoid Valve (Cont'd)

For Europe and Israel

EC-EGRC/V-01

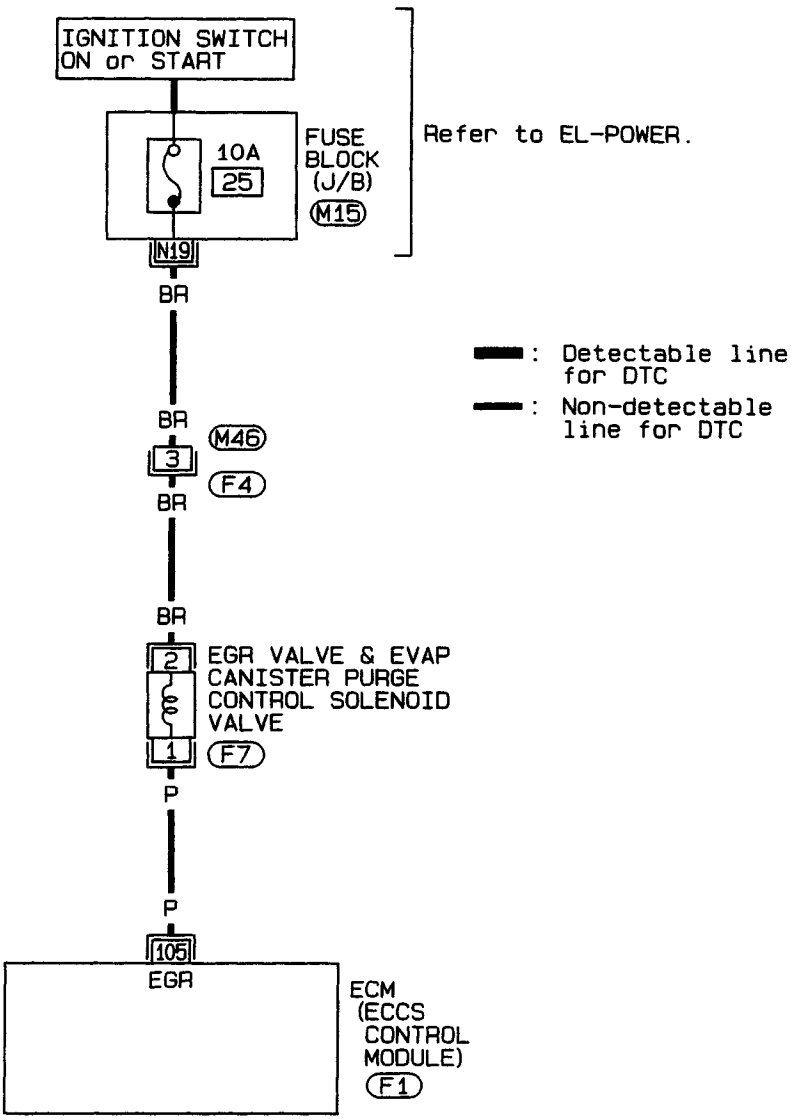



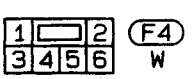

Refer to last page (Foldout page).

M15

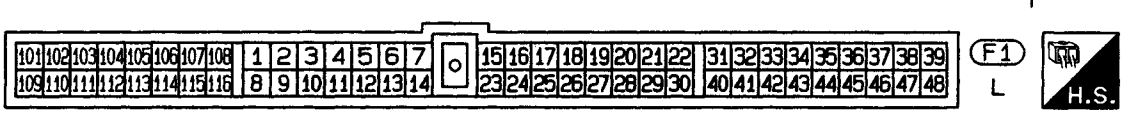

HEC042

Simpo PDF Merge and Split Unregistered Version - http://www.simpopdf.com

EGR Valve and EVAP Canister Purge Control Solenoid Valve (Cont'd)

GA16DE for Australia

EC-EGRC/V-01

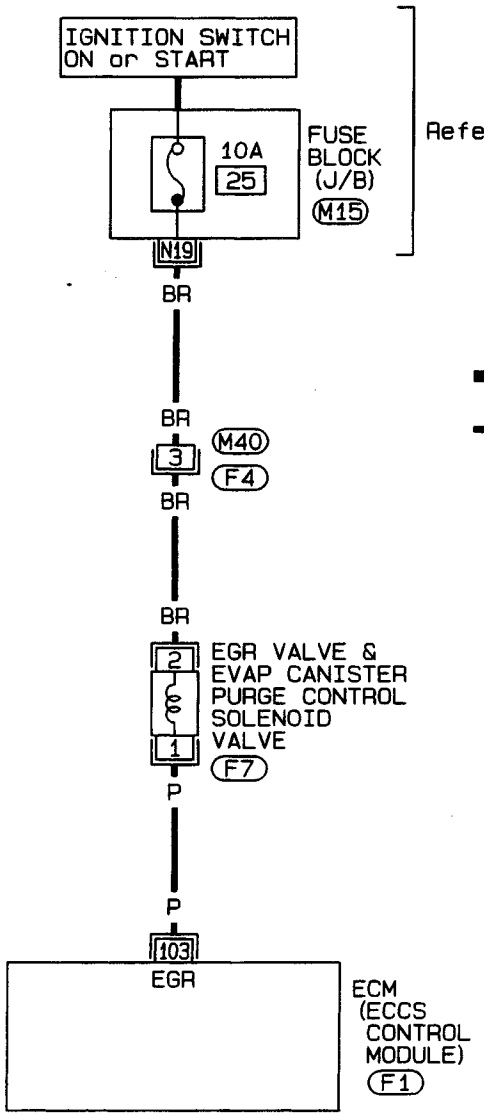



Refer to last page (Foldout page).

M15

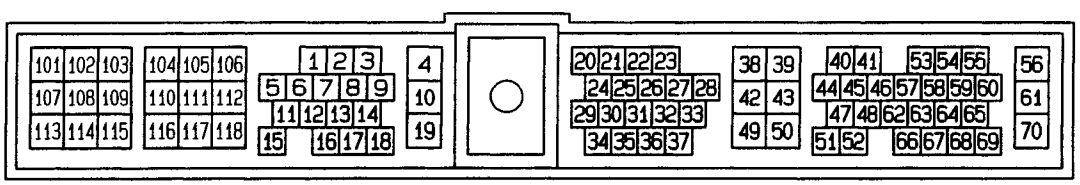

HEC074

Simpo PDF Merge and Split Unregistered Version - http://www.simpopdf.com

EGR Valve and EVAP Canister Purge Control Solenoid Valve (Cont'd)

DIAGNOSTIC PROCEDURE

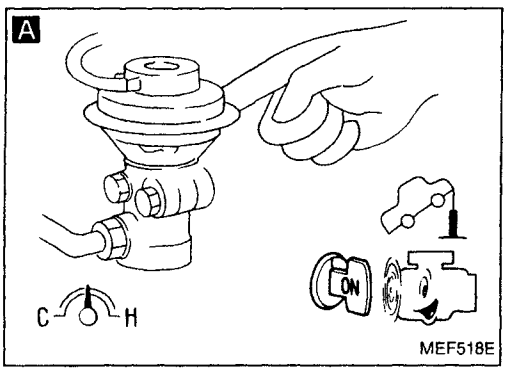

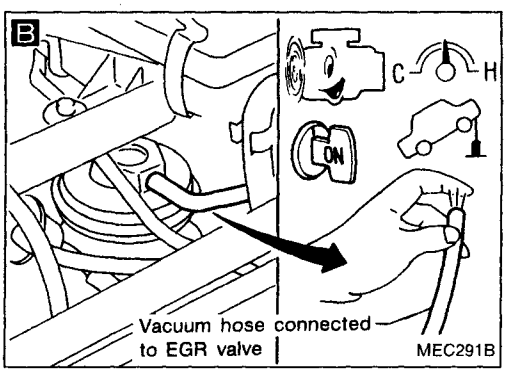

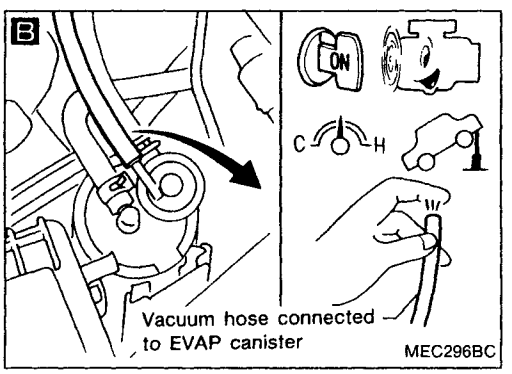

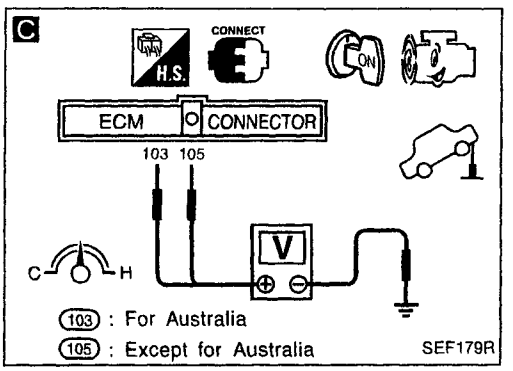

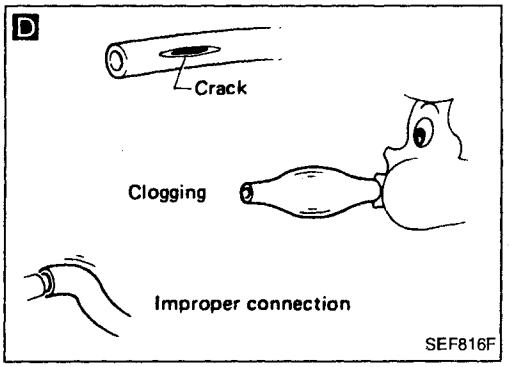

INSPECTION START

A

CHECK OVERALL FUNCTION.
1) Jack up drive wheels.
2) Start engine and warm it up sufficiently.
3) Perform diagnostic test mode II (Self-diagnostic results).
Make sure that diagnostic trouble code No. 55 is displayed.
4) Set the shift lever to 1st position.
5) Make sure that EGR valve spring moves up and down (Use your finger) under the following conditions.
At idle:
Spring does not move.
Racing engine from idle to 3,000 rpm:
Spring moves up and down.

OK → INSPECTION END

NG ↓

B

CHECK VACUUM SOURCES TO EGR VALVE AND EVAP CANISTER.
1) Disconnect vacuum hoses to EGR valve and EVAP canister.
2) Make sure that vacuum exists under the following conditions.
At idle:
Vacuum should not exist.
Racing engine from idle to 3,000 rpm:
Vacuum should exist.

OK → CHECK COMPONENTS (EGR valve, EGRC-BPT valve and activated EVAP canister).
Refer to "COMPONENT INSPECTION". (See page EC-188.)

NG ↓

Replace malfunctioning component(s).

NG ↓

C

CHECK CONTROL FUNCTION.
1) Check voltage between ECM terminal (105) or (103) and ground under the following conditions.
Voltage:
At idle
Approximately 0V
Engine speed is 2,500 rpm
Battery voltage

OK → D

CHECK VACUUM HOSE.
1) Check vacuum hose for clogging, cracks or improper connection.

NG ↓

Ⓐ

Simpo PDF Merge and Split Unregistered Version - http://www.simpopdf.com

EGR Valve and EVAP Canister Purge Control Solenoid Valve (Cont'd)

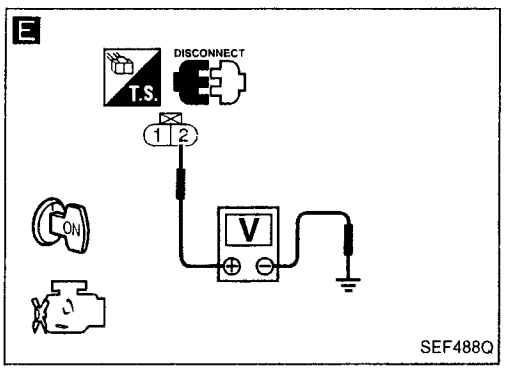

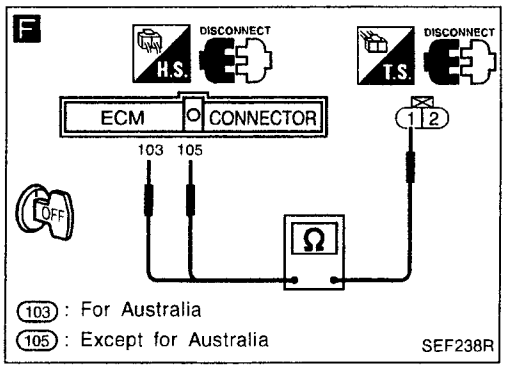

Ⓐ

E

CHECK POWER SUPPLY.
1) Stop engine.
2) Disconnect EGR valve & EVAP canister purge control solenoid valve harness connector.
3) Turn ignition switch "ON".
4) Check voltage between terminal ② and ground.
Voltage: Battery voltage

NG → Check the following.
- Harness connectors F4, M40
- 10A fuse
- Harness continuity between EGR valve & EVAP canister purge control solenoid valve and fuse

If NG, repair harness or connectors.

OK ↓

F

CHECK OUTPUT SIGNAL CIRCUIT.
1) Turn ignition switch "OFF".
2) Disconnect ECM harness connector.
3) Check harness continuity between ECM terminal 105 or 103 and terminal ①.
Continuity should exist.

NG → Repair harness or connectors.

OK ↓

CHECK COMPONENT
(EGR valve & EVAP canister purge control solenoid valve).
Refer to "COMPONENT INSPECTION".

NG → Replace EGR valve & EVAP canister purge control solenoid valve.

OK ↓

Disconnect and reconnect harness connectors in the circuit. Then retest.

Trouble is not fixed. ↓

Check ECM pin terminals for damage or the connection of ECM harness connector. Reconnect ECM harness connector and retest.

↓

INSPECTION END

EC

Simpo PDF Merge and Split Unregistered Version - http://www.simpopdf.com

EGR Valve and EVAP Canister Purge Control Solenoid Valve (Cont'd)

COMPONENT INSPECTION

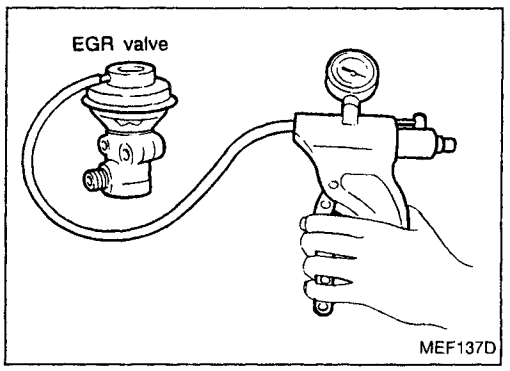

EGR valve

Apply vacuum to EGR vacuum port with a hand vacuum pump.
EGR valve spring should lift.
If NG, replace EGR valve.

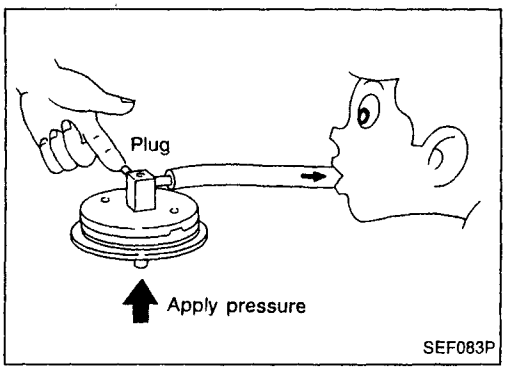

EGRC-BPT valve

1) Plug one of two ports of EGRC-BPT valve.
2) Vacuum from the other port and check for leakage while applying a pressure above 0.981 kPa (100 mmH_2O, 3.94 inH_2O) from under EGRC-BPT valve.
3) If a leakage is noted, replace the valve.

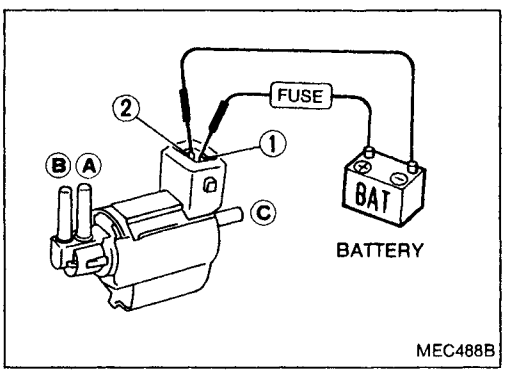

EGR valve and EVAP canister purge control solenoid valve

Check air passage continuity.

Condition	Air passage continuity between Ⓐ and Ⓑ	Air passage continuity between Ⓐ and Ⓒ
12V direct current supply between terminals ① and ②	Yes	No
No supply	No	Yes

If NG, replace solenoid valve.

Simpo PDF Merge and Split Unregistered Version - http://www.simpopdf.com

Heated Oxygen Sensor (HO2S)

For Europe and Israel

EC-H02S-01

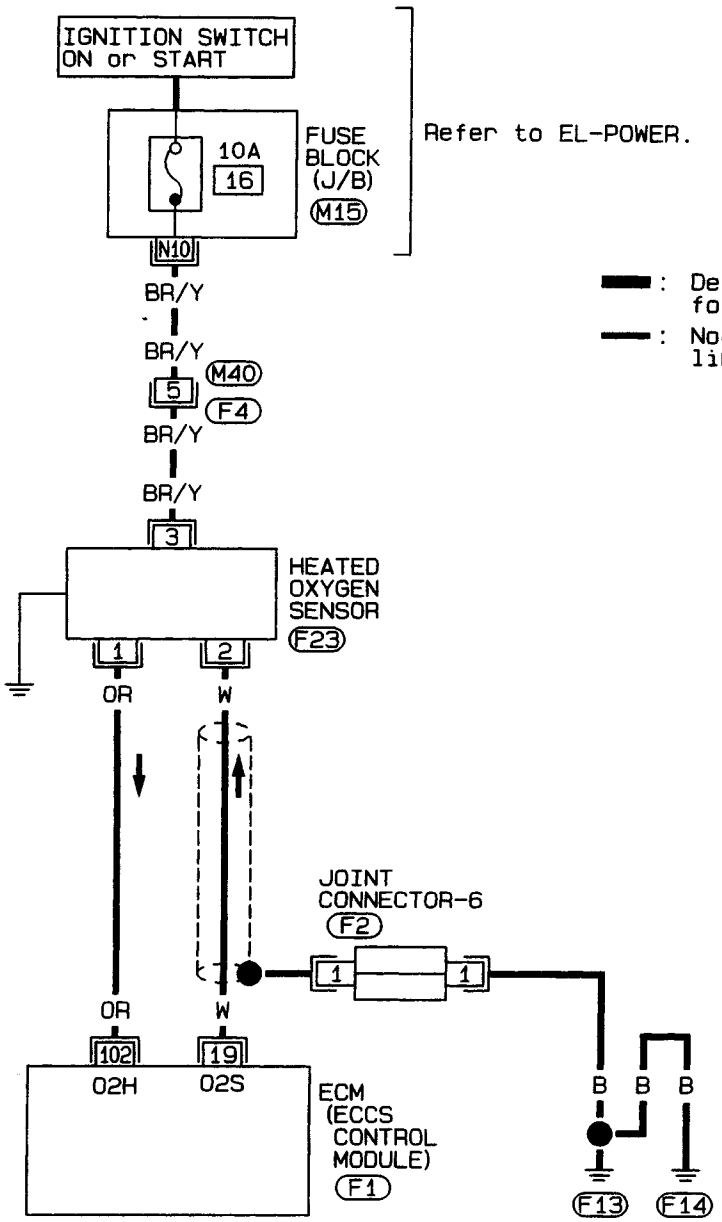

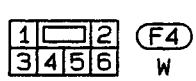

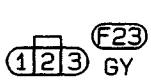

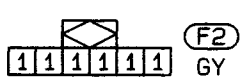

Refer to last page (Foldout page).

M15

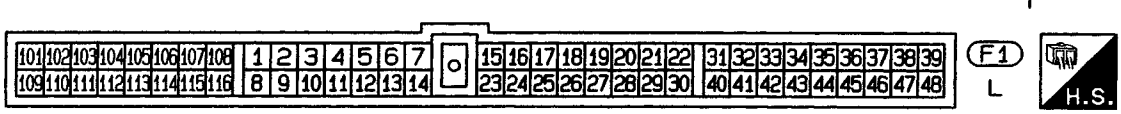

HEC048

Simpo PDF Merge and Split Unregistered Version - http://www.simpopdf.com

Heated Oxygen Sensor (HO2S) (Cont'd)

GA16DE for Australia (A/T models)

EC-H02S-01

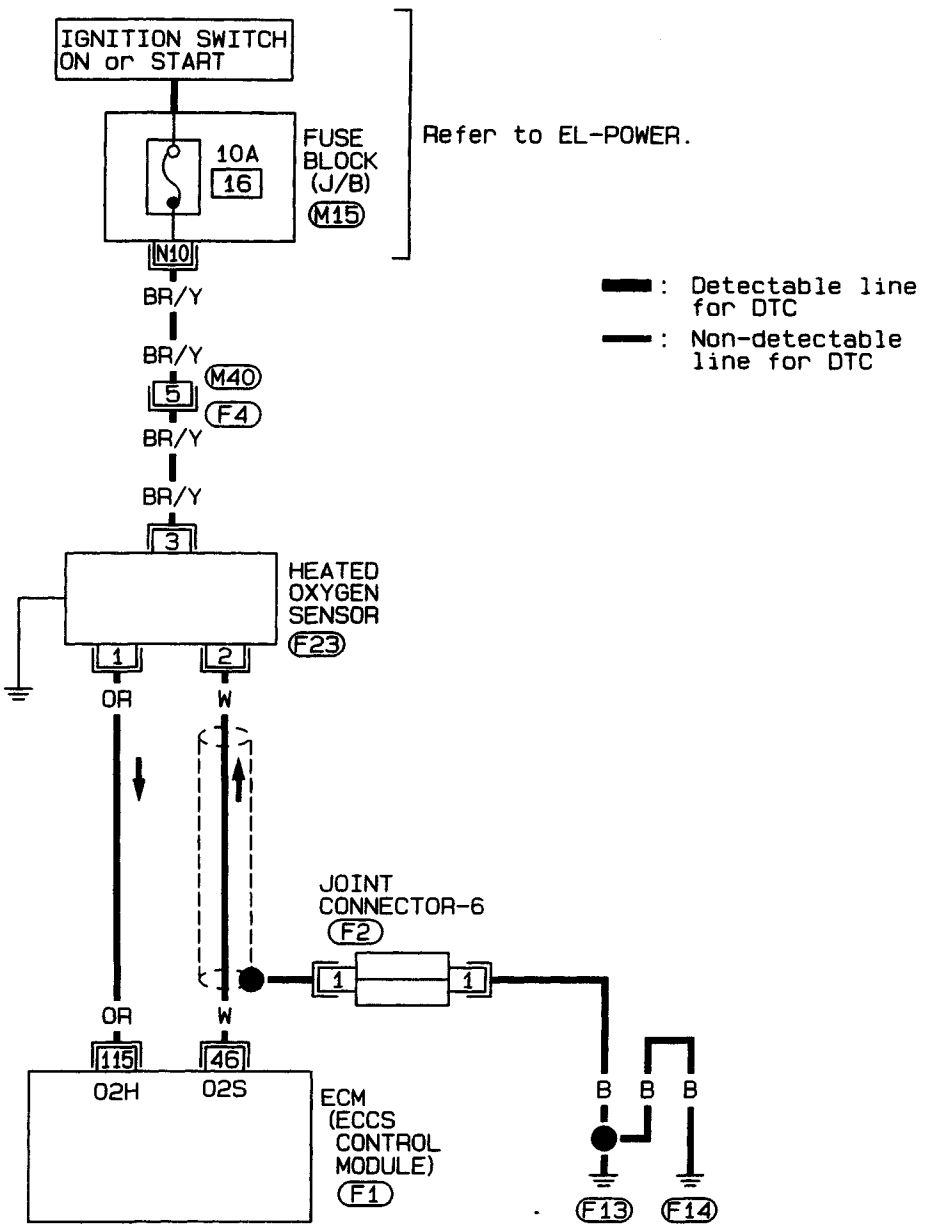

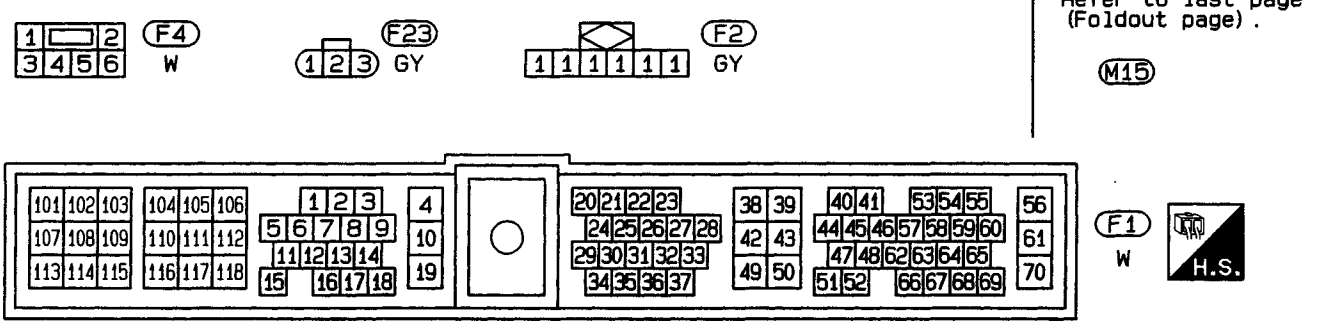

HEC080

Simpo PDF Merge and Split Unregistered Version - http://www.simpopdf.com

Heated Oxygen Sensor (HO2S) (Cont'd)

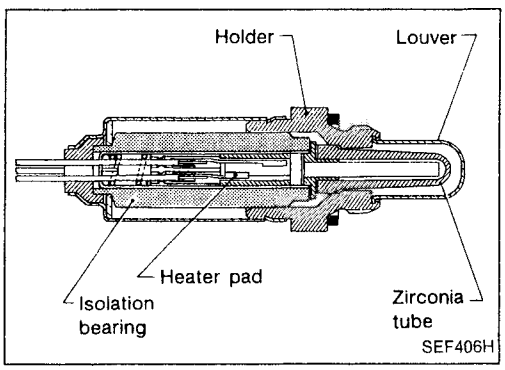

The heated oxygen sensor is placed into the exhaust manifold. It detects the amount of oxygen in the exhaust gas compared to the outside air. The heated oxygen sensor has a closed-end tube made of ceramic zirconia. The zirconia generates voltage from approximately 1V in richer conditions to 0V in leaner conditions. The heated oxygen sensor signal is sent to the ECM. The ECM adjusts the injection pulse duration to achieve the ideal air-fuel ratio. The ideal air-fuel ratio occurs near the radical change from 1V to 0V.

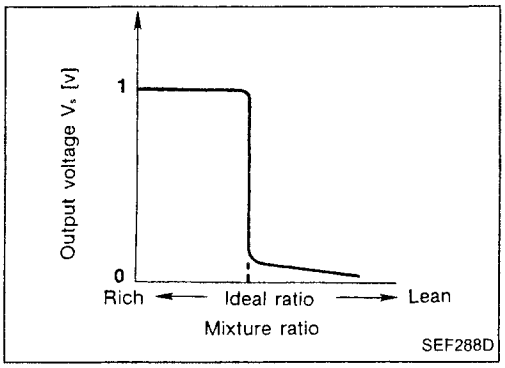

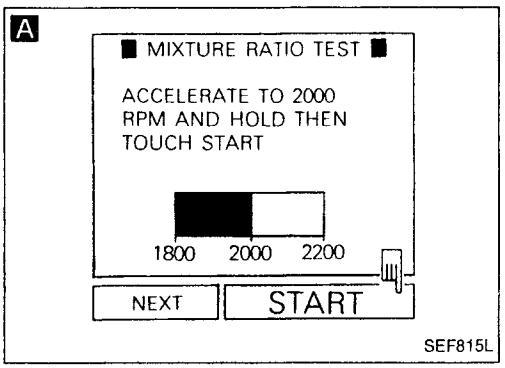

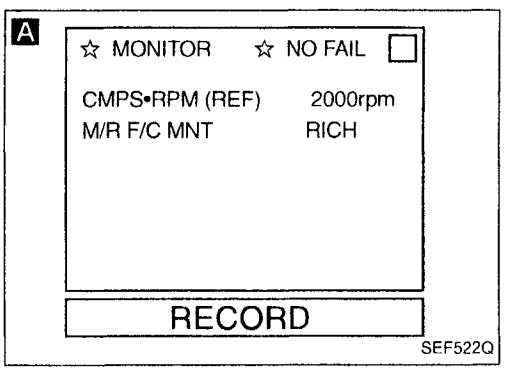

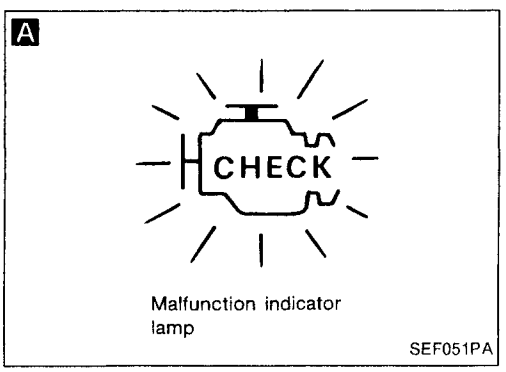

DIAGNOSTIC PROCEDURE

INSPECTION START

A

CHECK OXYGEN SENSOR CIRCUIT.
1) Start engine and warm it up sufficiently.
2) Perform "MIXTURE RATIO TEST" in "FUNCTION TEST" mode with CONSULT.

OR

2) Make sure that "M/R F/C MNT" in "DATA MONITOR" mode indicates "RICH" and "LEAN" periodically more than 5 times during 10 seconds at 2,000 rpm.

OR

2) Stop engine and set ECM Diagnostic Test Mode II (Heated oxygen sensor monitor).
3) Restart engine and run it at about 2,000 rpm for about 2 minutes under no-load.
4) Keep engine speed at 2,000 rpm and make sure that the malfunction indicator lamp on the instrument panel goes on and off more than 5 times during 10 seconds.

OK → INSPECTION END

NG → Ⓐ

Simpo PDF Merge and Split Unregistered Version - http://www.simpopdf.com

Heated Oxygen Sensor (HO2S) (Cont'd)

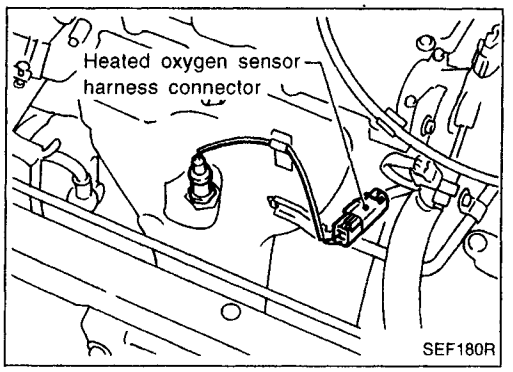

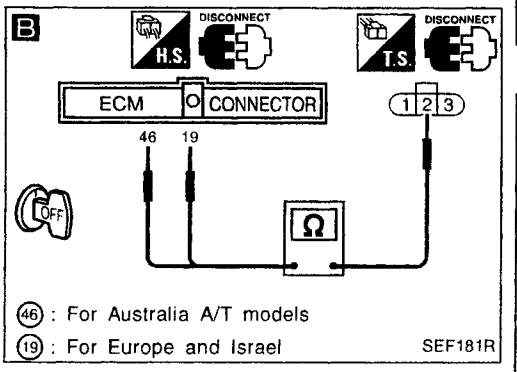

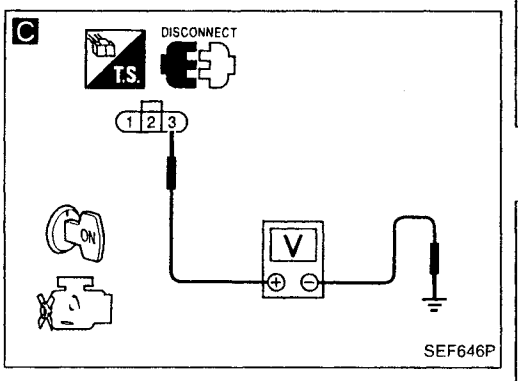

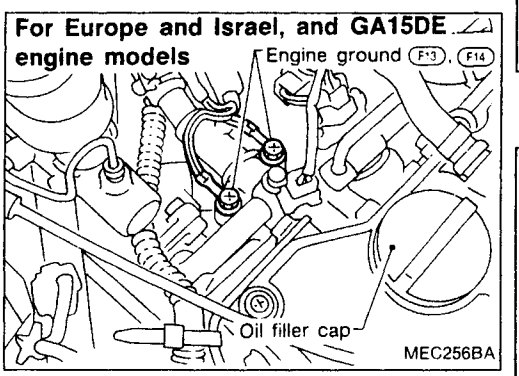

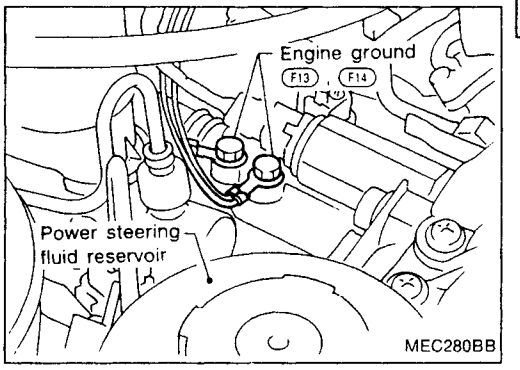

Ⓐ

B

CHECK INPUT SIGNAL CIRCUIT.
1. Stop engine.
2. Disconnect ECM harness connector and heated oxygen sensor harness connector.
3. Check harness continuity between ECM terminal ⑲ or ㊻ and terminal ②.

Continuity should exist.
If OK, check harness for short.

NG → Repair harness or connectors.

OK ↓

CHECK HEATED OXYGEN SENSOR HEATER CIRCUIT.
1. Reconnect harness connectors.
2. Start engine.
3. Check voltage between ECM terminal ⑩② (For Europe and Israel) or ⑪⑤ (For Australia A/T models) and ground with CONSULT or tester under the following conditions.

Voltage:
Engine speed is below 3,200 rpm
Approximately 0V
Engine speed is above 3,200 rpm
Battery voltage

OK → Go to "CHECK COMPONENT".

NG ↓

C

CHECK POWER SUPPLY.
1. Stop engine.
2. Disconnect heated oxygen sensor harness connector.
3. Turn ignition switch "ON".
4. Check voltage between terminal ③ and ground.

Voltage: Battery voltage

NG → Check the following.
- Harness connectors F4, M40
- 10A fuse
- Harness for open or short between heated oxygen sensor and fuse

If NG, repair harness or connectors.

OK ↓

CHECK OUTPUT SIGNAL CIRCUIT.
1. Turn ignition switch "OFF".
2. Disconnect ECM harness connector.
3. Check harness continuity between terminal ① and ECM terminal ⑩② (For Europe and Israel) or ⑪⑤ (For Australia A/T models).

Continuity should exist.
If OK, check harness for short.

NG → Repair harness or connectors.

OK ↓

Ⓑ

Simpo PDF Merge and Split Unregistered Version - http://www.simpopdf.com

Heated Oxygen Sensor (HO2S) (Cont'd)

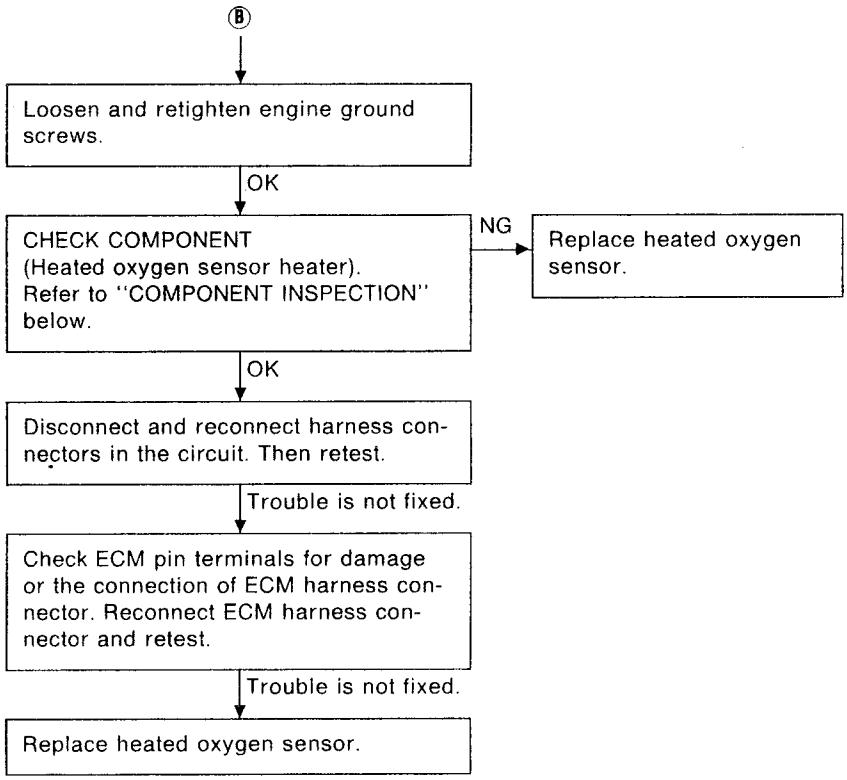

EC

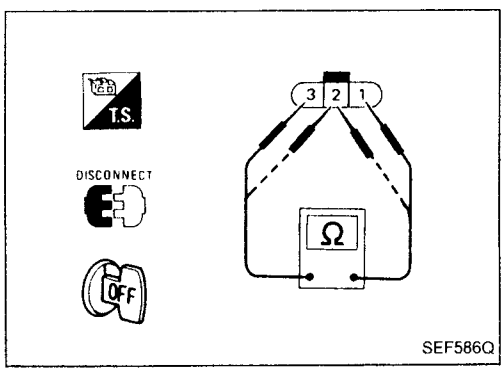

COMPONENT INSPECTION

Heated oxygen sensor heater

Check resistance between terminals ③ and ①.

Resistance: 2.3 - 4.3Ω at 25°C (77°F)

Check continuity between terminals ② and ①, ③ and ②.

Continuity should not exist.

If NG, replace the heated oxygen sensor.

CAUTION:

- **Discard any oxygen sensor which has been dropped from a height of more than 0.5 m (19.7 in) onto a hard surface such as a concrete floor; use a new one.**

Simpo PDF Merge and Split Unregistered Version - http://www.simpopdf.com

Oxygen Sensor (O2S)

Except for Europe and Israel

EC-02S-01

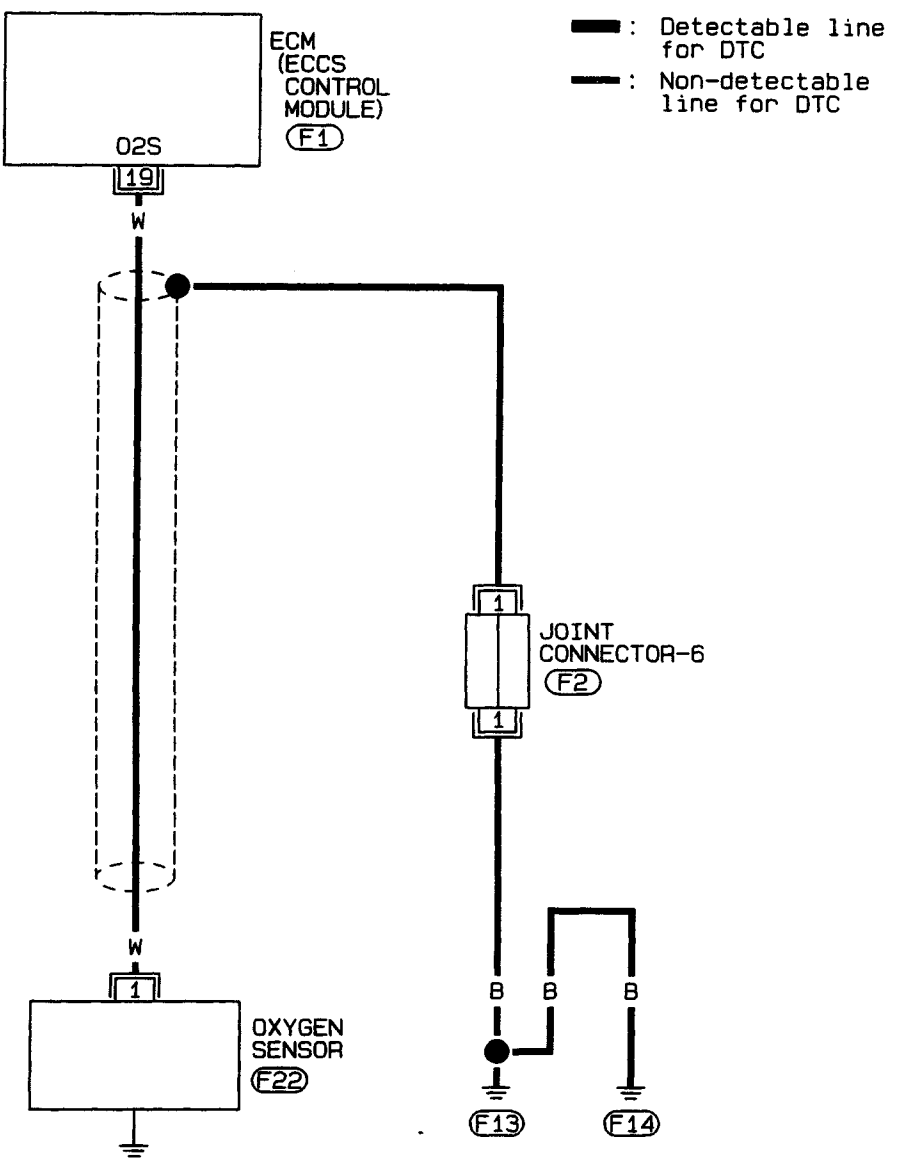



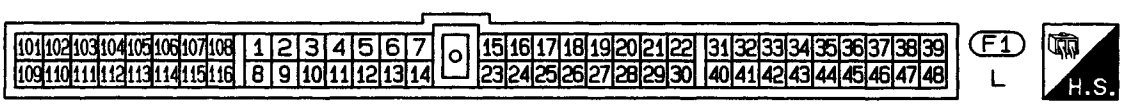

HEC049

Simpo PDF Merge and Split Unregistered Version - http://www.simpopdf.com

Oxygen Sensor (O2S) (Cont'd)

GA16DE for Australia (M/T models)

EC-02S-01

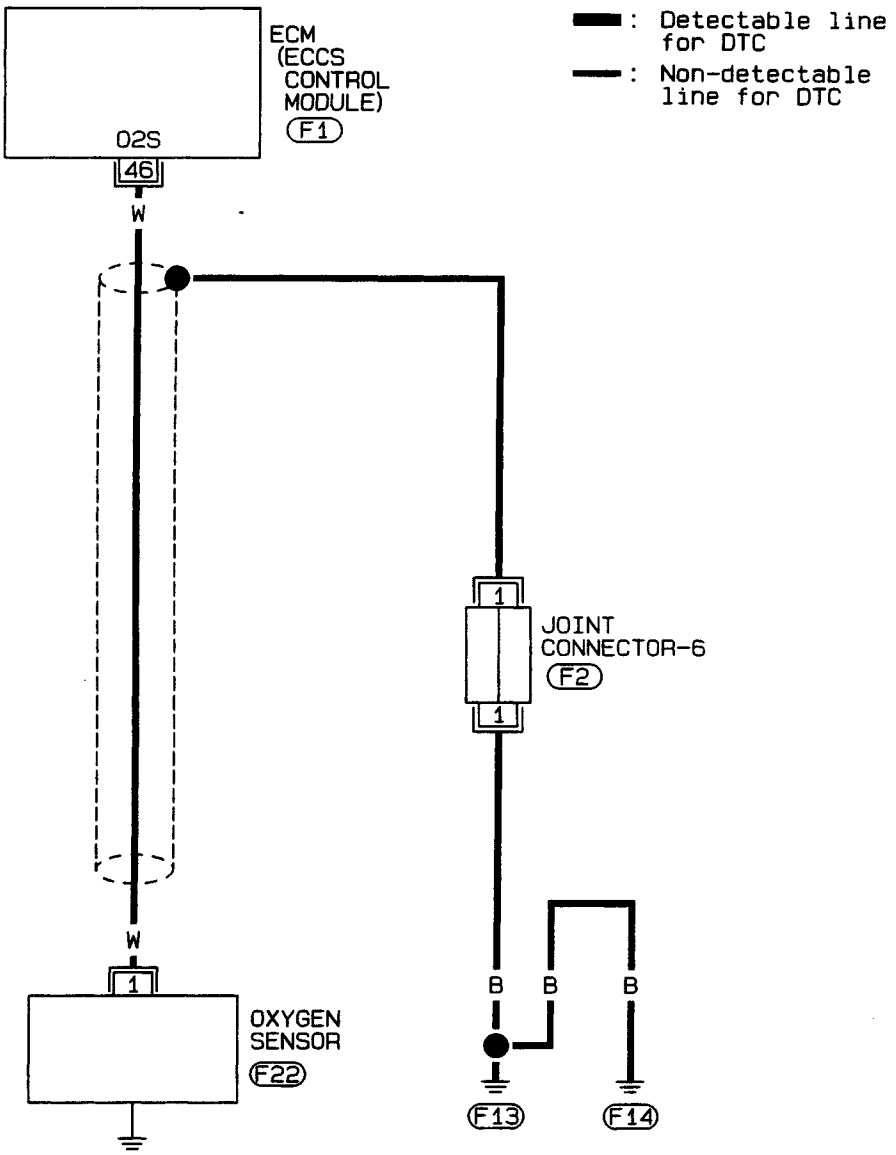



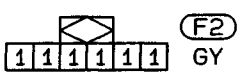

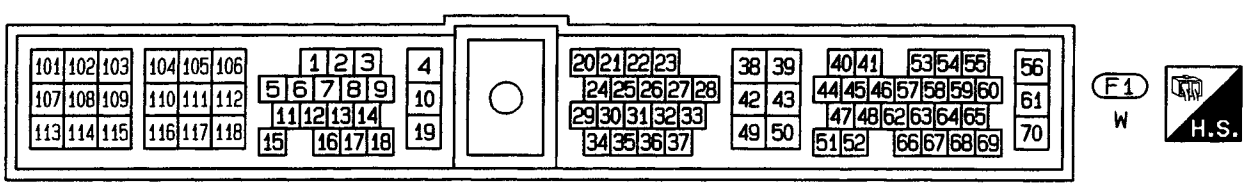

HEC081

Simpo PDF Merge and Split Unregistered Version - http://www.simpopdf.com

Oxygen Sensor (O2S) (Cont'd)

The O2S is placed into the exhaust manifold. It detects the amount of oxygen in the exhaust gas compared to the outside air. The sensor has a closed-end tube made of ceramic zirconia. The zirconia generates voltage from approximately 1V in richer conditions to 0V in leaner conditions. The sensor signal is sent to the ECM. The ECM adjusts the injection pulse duration to achieve the ideal air-fuel ratio. The ideal air-fuel ratio occurs near the radical change from 1V to 0V.

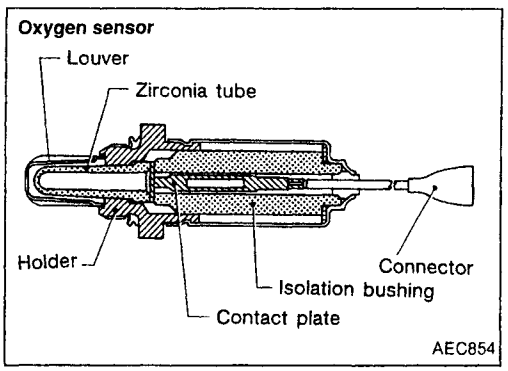

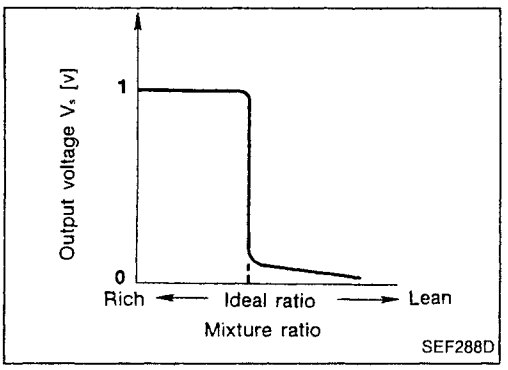

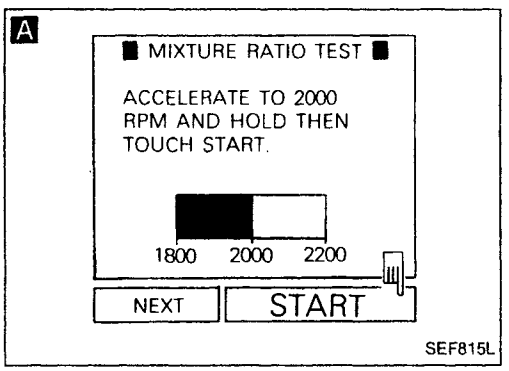

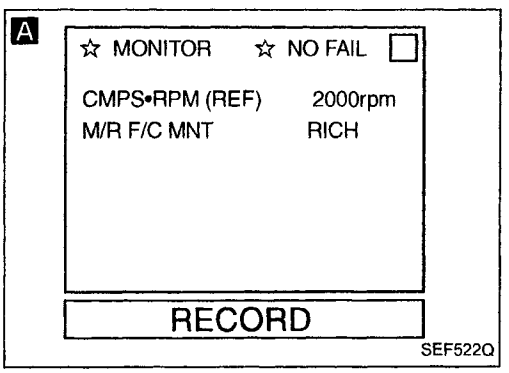

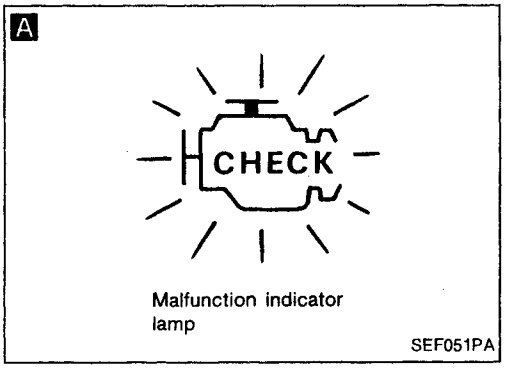

DIAGNOSTIC PROCEDURE

INSPECTION START

A

CHECK OXYGEN SENSOR CIRCUIT.
1. Start engine and warm it up sufficiently.
2. Perform "MIXTURE RATIO TEST" in "FUNCTION TEST" mode with CONSULT.

OR

2. Make sure that "M/R F/C MNT" in "DATA MONITOR" mode indicates "RICH" and "LEAN" periodically more than 5 times during 10 seconds at 2,000 rpm.

OR

2. Stop engine and set ECM Diagnostic Test Mode II (Oxygen sensor monitor).
3. Restart engine and run it at about 2,000 rpm for about 2 minutes under no-load.
4. Keep engine speed at 2,000 rpm and make sure that the malfunction indicator lamp on the instrument panel goes on and off more than 5 times during 10 seconds.

OK → INSPECTION END

NG → Ⓐ

Simpo PDF Merge and Split Unregistered Version - http://www.simpopdf.com

Oxygen Sensor (O2S) (Cont'd)

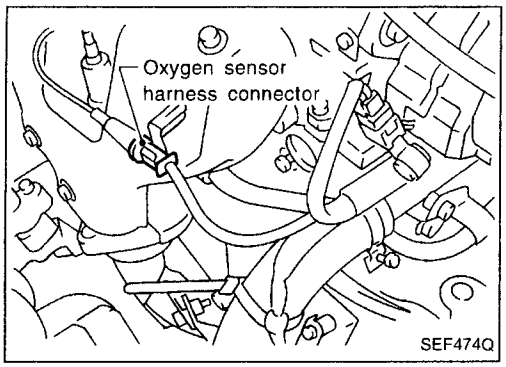

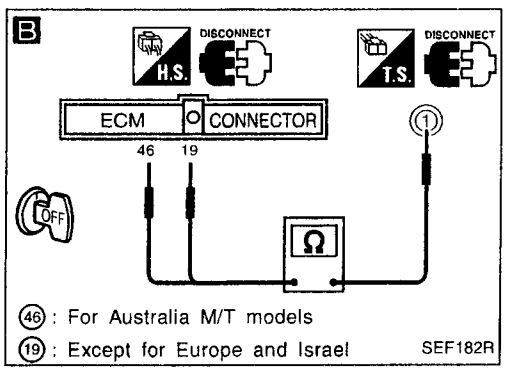

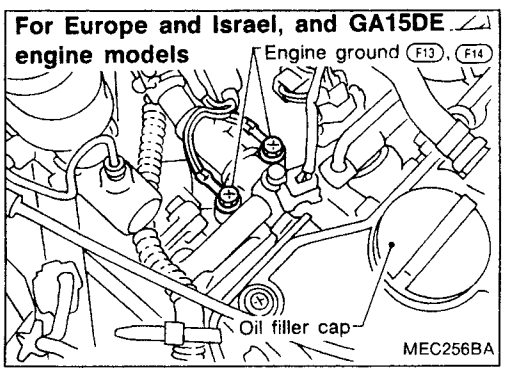

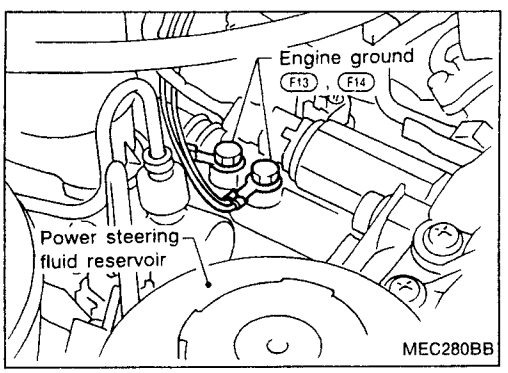

Ⓐ

B

CHECK INPUT SIGNAL CIRCUIT.
1. Stop engine.
2. Disconnect ECM harness connector and oxygen sensor harness connector.
3. Check harness continuity between ECM terminal ⑲ or ㊻ and terminal ①.
   Continuity should exist.
   If OK, check harness for short.

NG → Repair harness or connectors.

OK ↓

Loosen and retighten engine ground screws.

OK ↓

Disconnect and reconnect harness connectors in the circuit. Then retest.

Trouble is not fixed. ↓

Check ECM pin terminals for damage or the connection of ECM harness connector. Reconnect ECM harness connector and retest.

Trouble is not fixed. ↓

Replace oxygen sensor.

CAUTION:

- **Discard any oxygen sensor which has been dropped from a height of more than 0.5 m (19.7 in) onto a hard surface such as a concrete floor; use a new one.**

EC

Simpo PDF Merge and Split Unregistered Version - http://www.simpopdf.com

Valve Timing Control (VTC)

SYSTEM DESCRIPTION

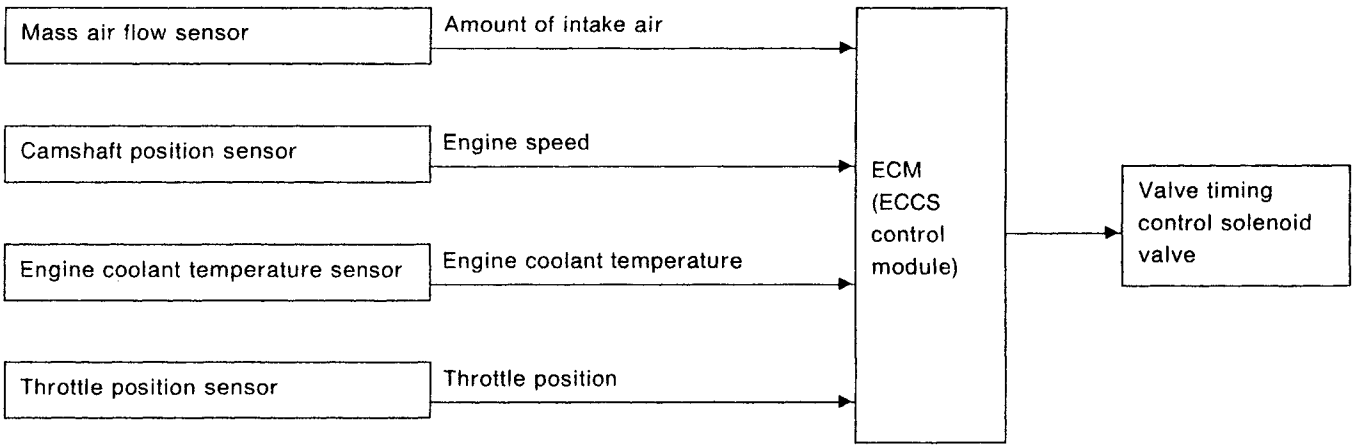

The valve timing control system is utilized to increase engine performance. Intake valve opening and closing time is controlled, according to the engine operating conditions, by the ECM.
Engine coolant temperature signals, engine speed, amount of intake air, throttle position, vehicle speed and gear position are used to determine intake valve timing.
The intake camshaft pulley position is regulated by oil pressure, which is controlled by the valve timing control solenoid valve.

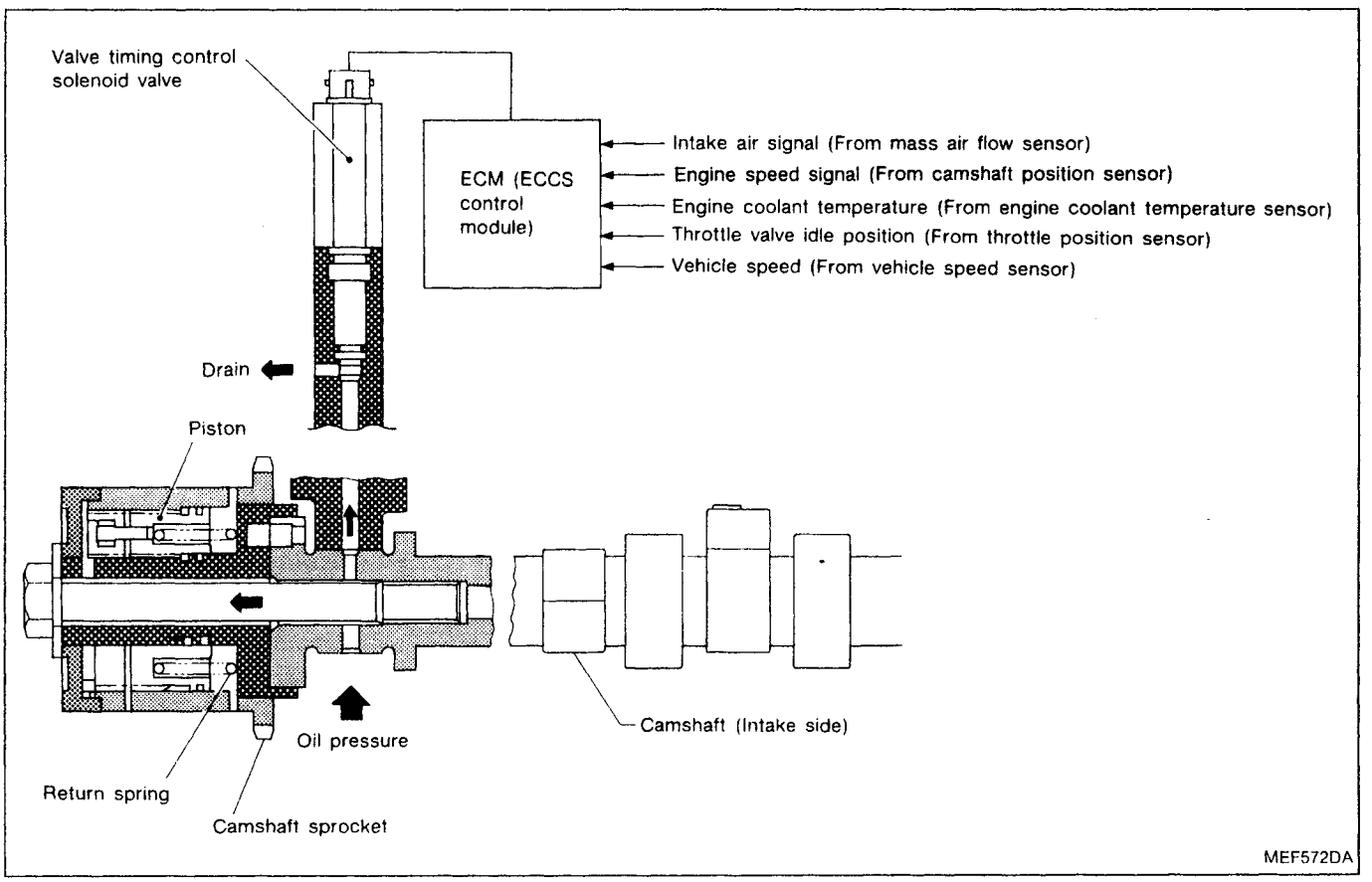

Simpo PDF Merge and Split Unregistered Version - http://www.simpopdf.com

Valve Timing Control (VTC) (Cont'd)

OPERATION

Engine operating condition	Valve timing control solenoid valve	Intake valve opening and closing time	Valve overlap	Engine torque curve
• Engine coolant temperature is 70°C (158°F) or more. • Engine load is high. • Engine speed is between 1,500 rpm and 5,100 rpm.	ON	Advance	Increased	Ⅱ
• Engine speed is 6,800 rpm or more.				
Those other than above	OFF	Normal	Normal	Ⅰ

EC

Ⅰ Valve timing control (VTC) solenoid valve is OFF.

Ⅱ Valve timing control (VTC) solenoid valve is ON.

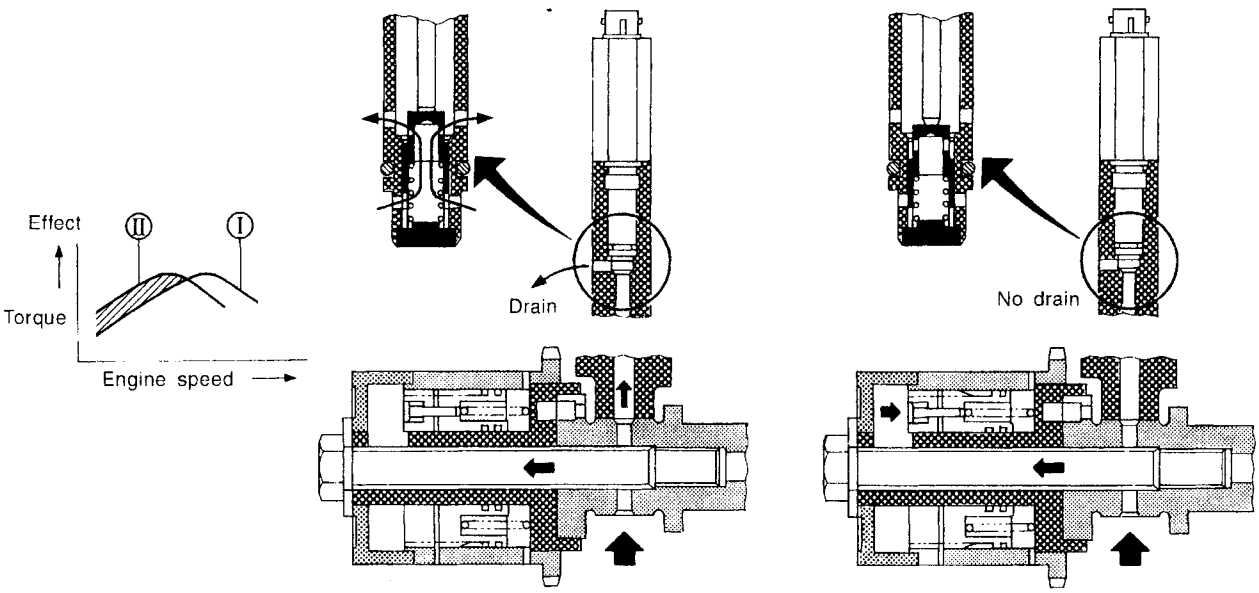

Except for Australia

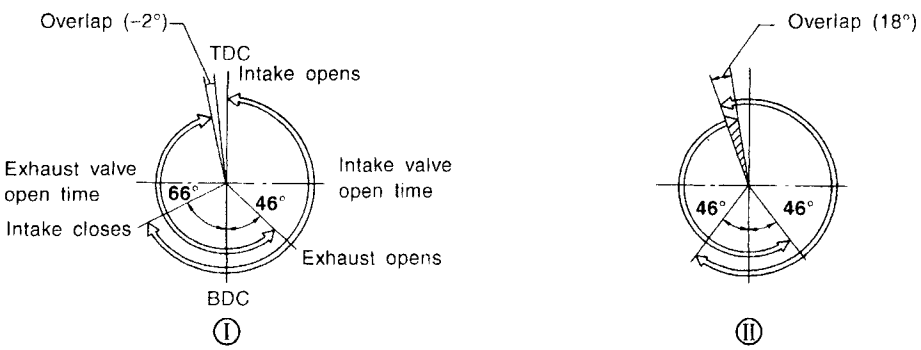

For Australia

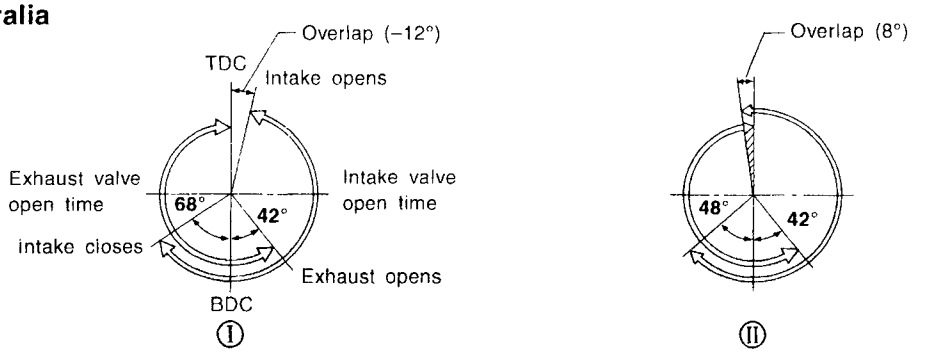

SEF183R

Simpo PDF Merge and Split Unregistered Version - http://www.simpopdf.com

Valve Timing Control (VTC) (Cont'd)

GA16DE engine models except for Europe and Israel

EC-VTC-01

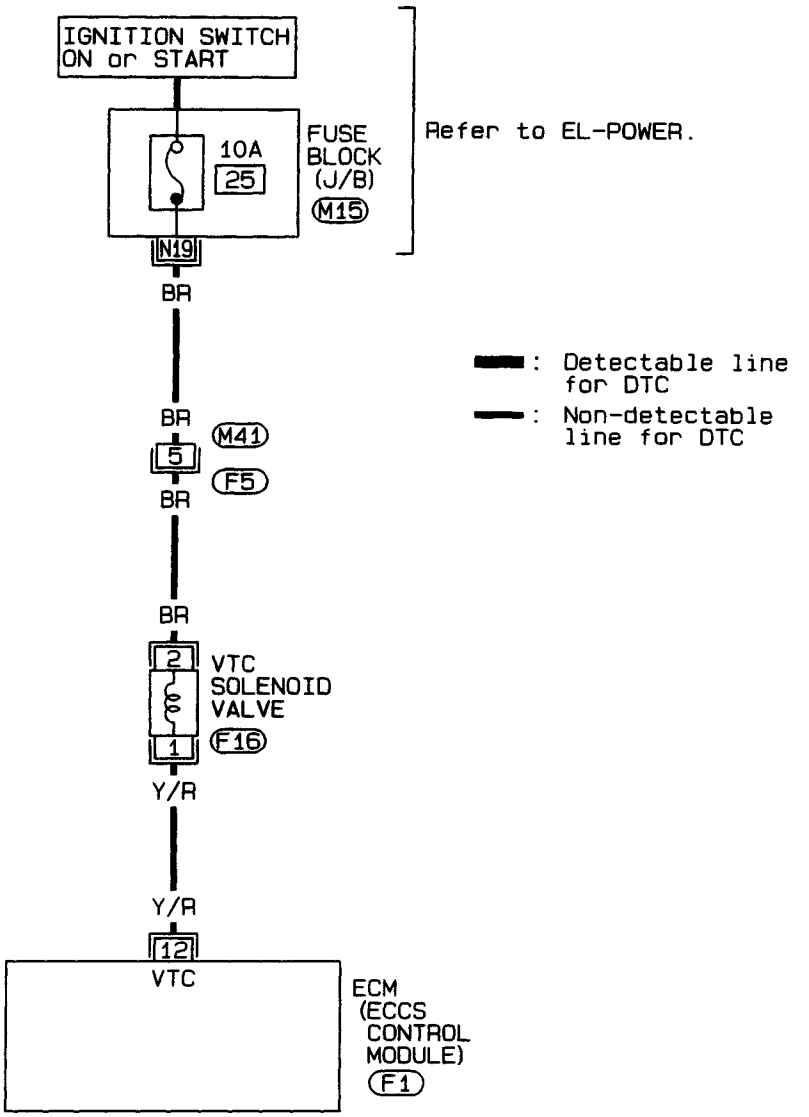

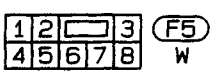

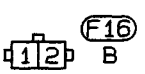

Refer to last page (Foldout page).

M15

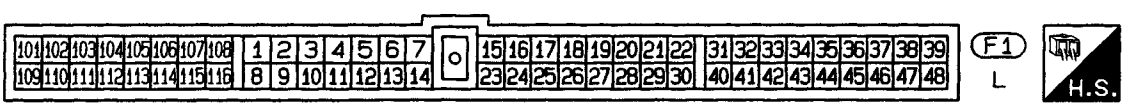

HEC050

Simpo PDF Merge and Split Unregistered Version - http://www.simpopdf.com

Valve Timing Control (VTC) (Cont'd)

GA16DE for Australia

EC-VTC-01

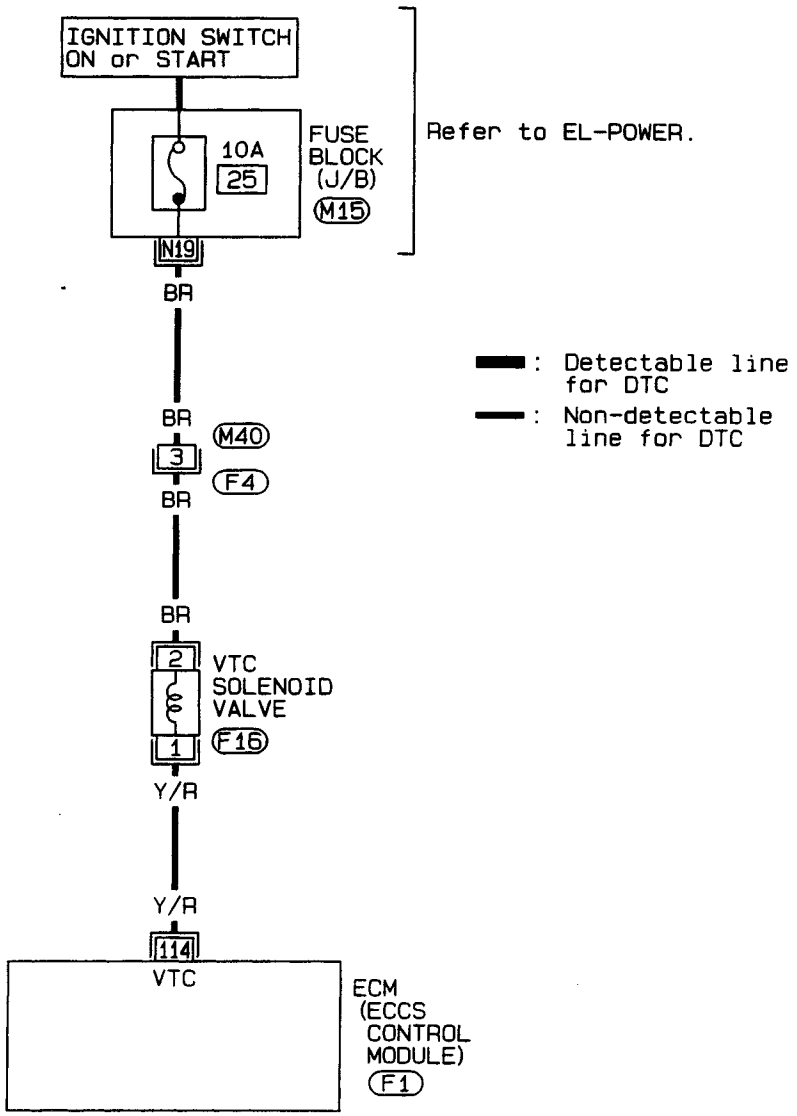

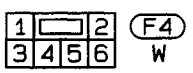

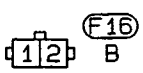

Refer to last page (Foldout page).

M15

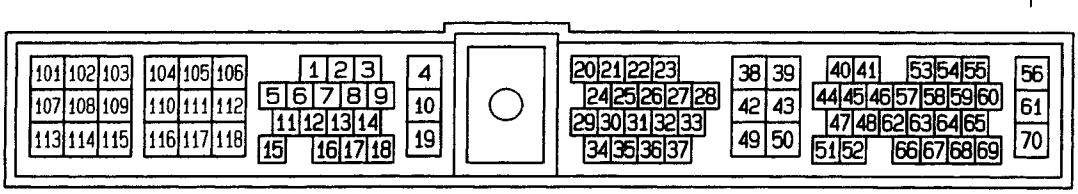



HEC082

Simpo PDF Merge and Split Unregistered Version - http://www.simpopdf.com

Valve Timing Control (VTC) (Cont'd)

DIAGNOSTIC PROCEDURE

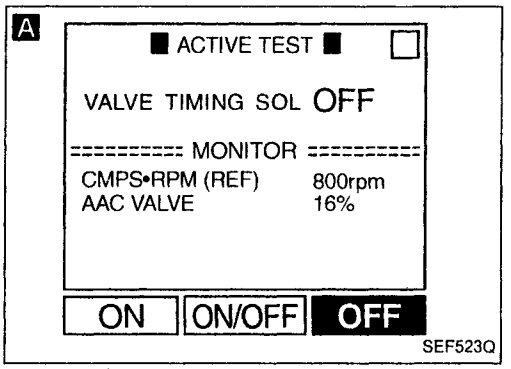

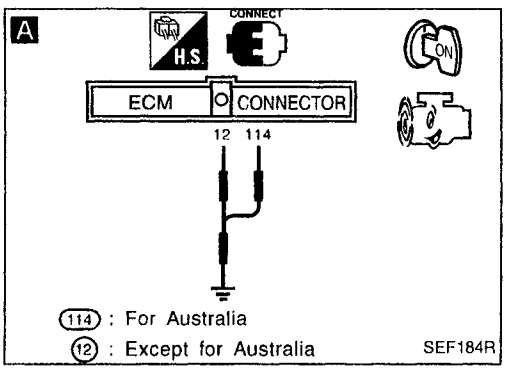

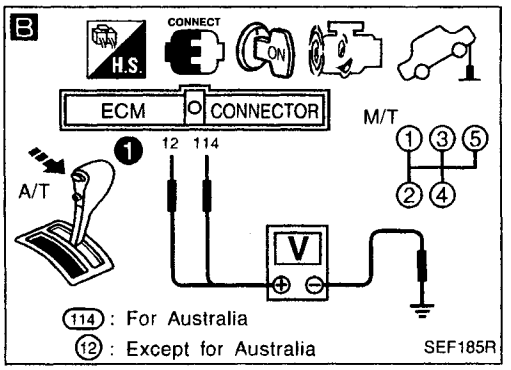

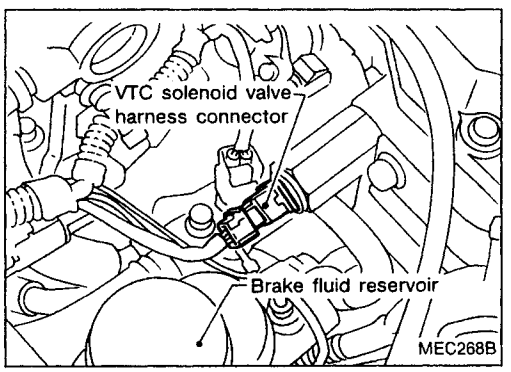

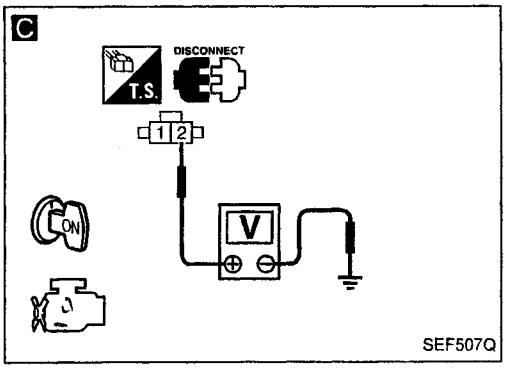

INSPECTION START

A

CHECK OVERALL FUNCTION.

1. Start engine and run it at idle.
2. Perform "VALVE TIMING SOL" in "ACTIVE TEST" mode with CONSULT and make sure that improper idle condition occurs.

OR

1. Connect a suitable jumper wire between ECM terminal (12) or (114) and body ground.
2. Start engine and make sure that improper idle condition occurs.

OK → INSPECTION END

NG

B

CHECK ELECTRICAL CONTROL FUNCTION.

1. Stop engine.
2. Jack up drive wheels.
3. Start engine and warm it up sufficiently.
4. Shift gear to 1st position.
5. Check voltage between ECM terminal (12) or (114) and ground under the following conditions.

Voltage:

Racing engine quickly from idle to 4,000 rpm
Approximately 0V
At idle
Battery voltage

OK → CHECK COMPONENTS (VTC solenoid valve and VTC valve).
Refer to "COMPONENT INSPECTION" on next page.

NG → Replace malfunctioning component(s).

NG

C

CHECK POWER SUPPLY.

1. Stop engine.
2. Disconnect VTC solenoid valve harness connector.
3. Turn ignition switch "ON".
4. Check voltage between terminal (2) and ground.

Voltage: Battery voltage

NG → Check the following.
- Harness connectors (F5), (M41) or (F4), (M40)
- 10A fuse
- Harness for open or short between VTC solenoid valve and fuse

If NG, repair harness or connectors.

OK

Ⓐ

Simpo PDF Merge and Split Unregistered Version - http://www.simpopdf.com

Valve Timing Control (VTC) (Cont'd)

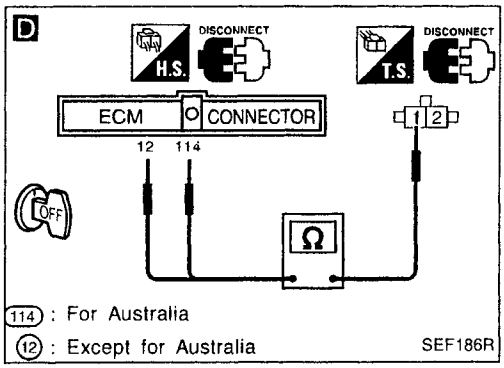

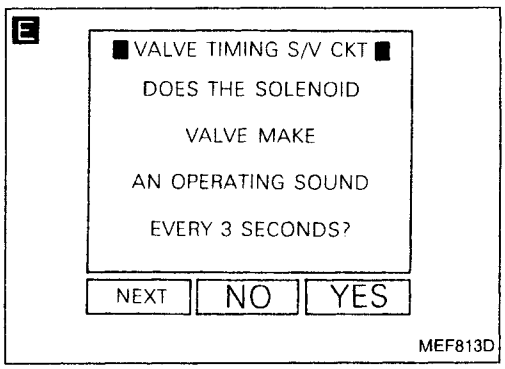

Ⓐ

D

CHECK OUTPUT SIGNAL CIRCUIT.
1. Turn ignition switch "OFF".
2. Disconnect ECM harness connector.
3. Check harness continuity between ECM terminal ⑫ or (114) and terminal ①.

Continuity should exist.

If OK, check harness for short.

NG → Repair harness or connectors.

OK ↓

E

CHECK COMPONENT (VTC solenoid valve).

Perform "VALVE TIMING S/V CKT" in "FUNCTION TEST" mode with CONSULT.

— OR —

Refer to "COMPONENT INSPECTION" below.

NG → Replace VTC solenoid valve.

OK ↓

Disconnect and reconnect harness connectors in the circuit. Then retest.

Trouble is not fixed. ↓

Check ECM pin terminals for damage or the connection of ECM harness connector. Reconnect ECM harness connector and retest.

↓

INSPECTION END

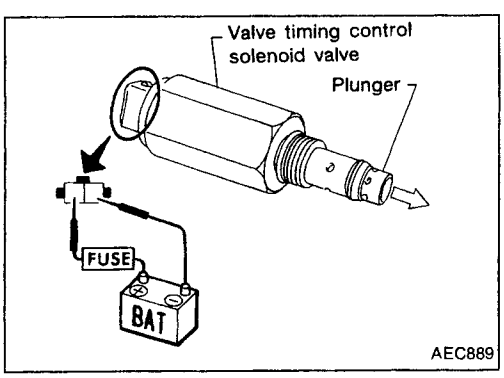

COMPONENT INSPECTION

VTC solenoid valve

1. Supply VTC solenoid valve terminals with battery voltage.
2. Make sure that inside plunger protrudes.
   If NG, replace VTC solenoid valve.

Simpo PDF Merge and Split Unregistered Version - http://www.simpopdf.com

IACV-FICD Solenoid Valve

LHD models

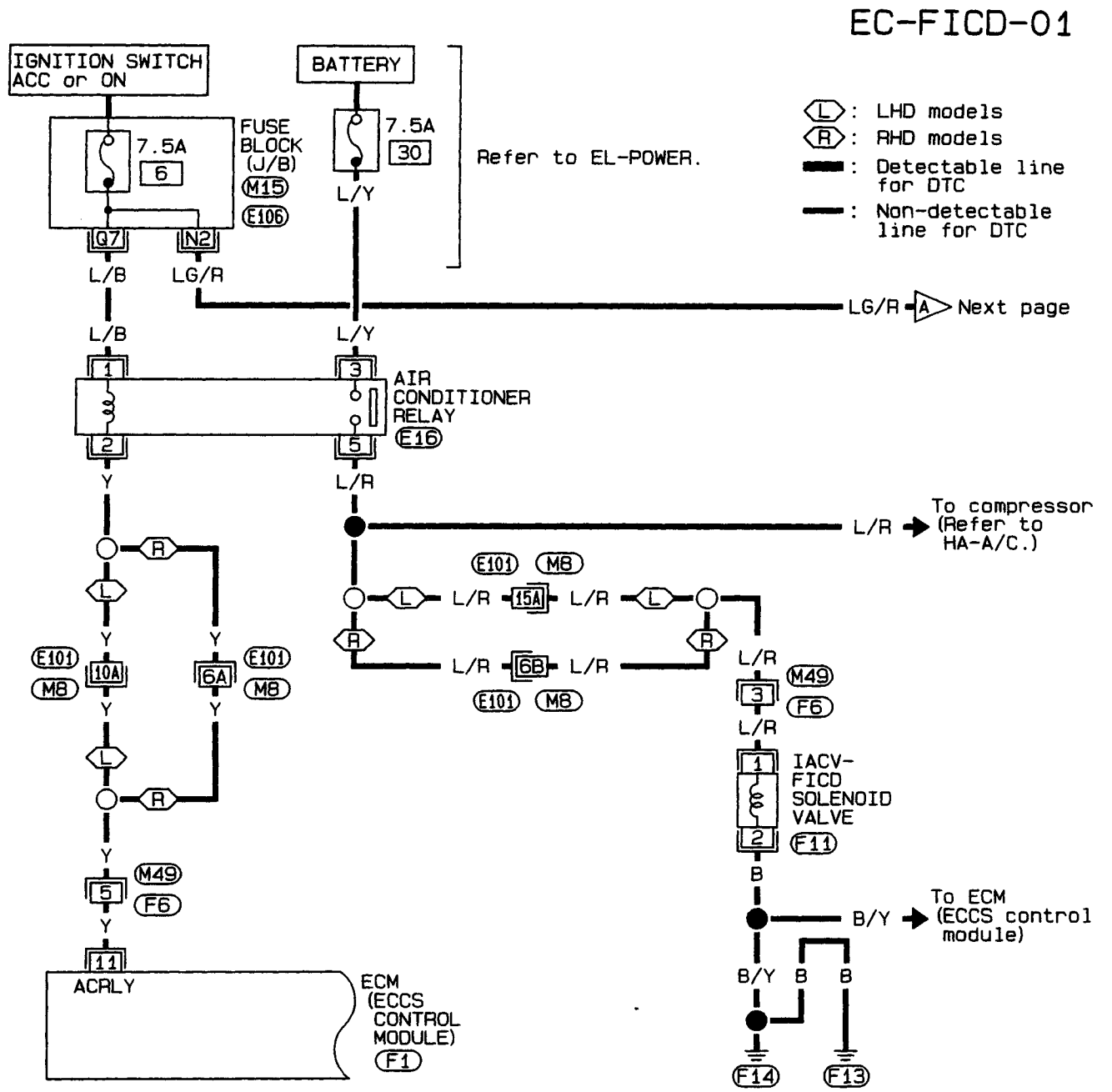

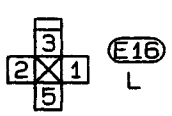





Refer to last page (Foldout page).

M8, E101

M15, E106

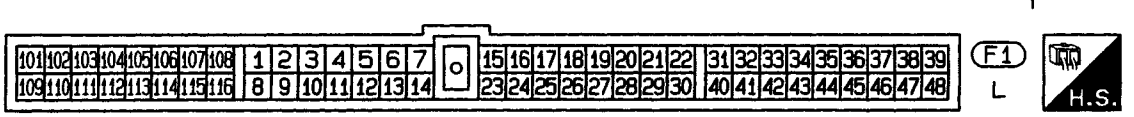

HEC051

Simpo PDF Merge and Split Unregistered Version - http://www.simpopdf.com

IACV-FICD Solenoid Valve (Cont'd)

EC-FICD-02

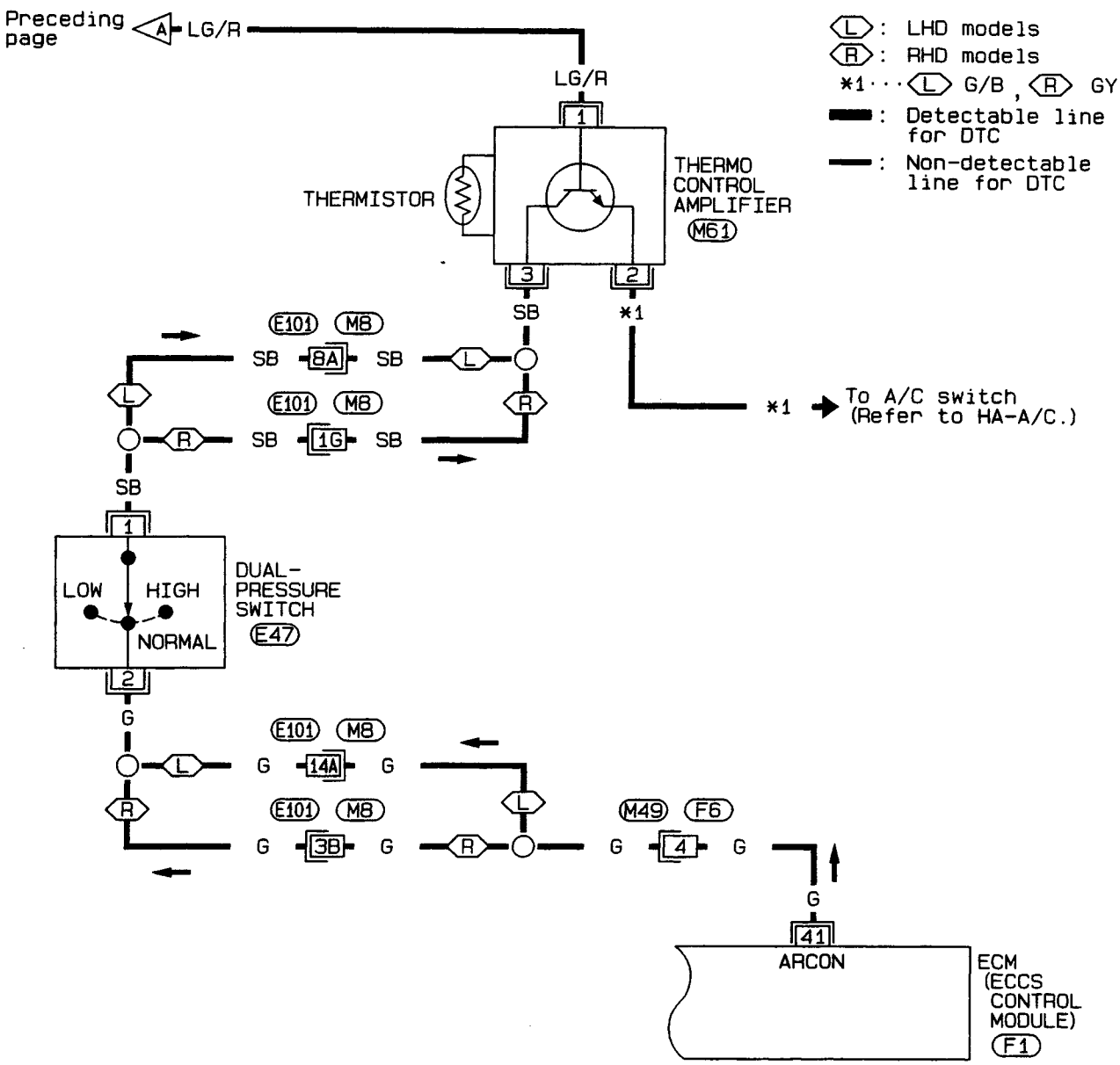

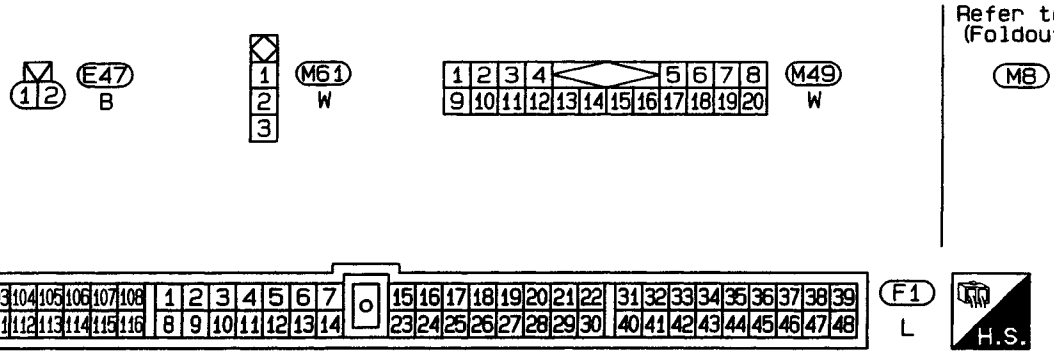

HEC052

Simpo PDF Merge and Split Unregistered Version - http://www.simpopdf.com

IACV-FICD Solenoid Valve (Cont'd)

RHD models

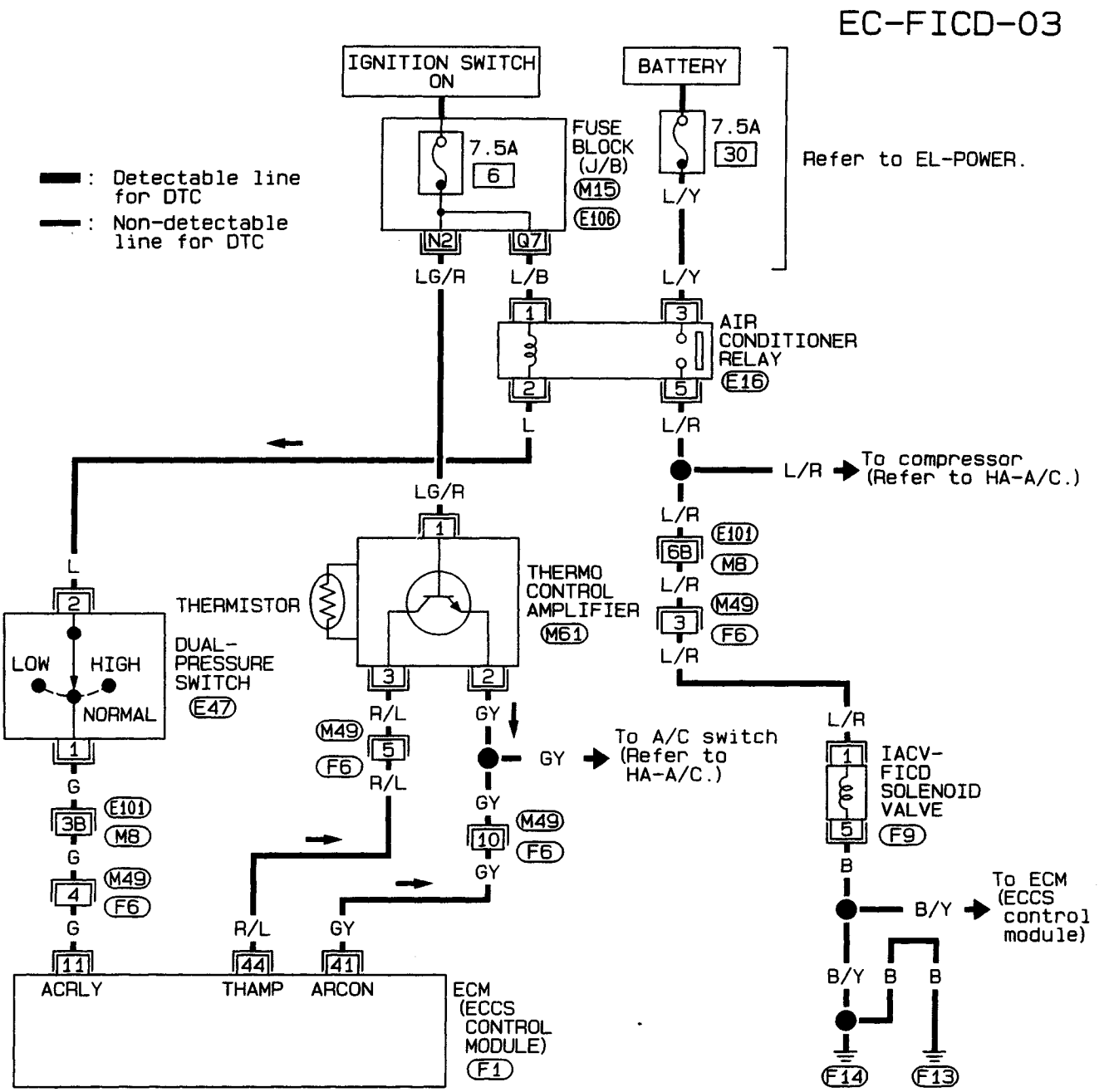

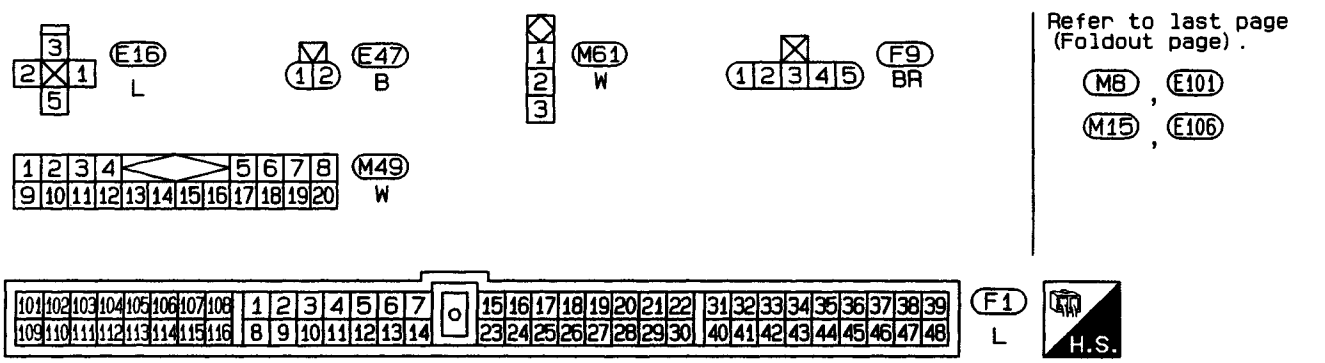

Refer to last page (Foldout page).

M8, E101
M15, E106

HEC053

Simpo PDF Merge and Split Unregistered Version - http://www.simpopdf.com

IACV-FICD Solenoid Valve (Cont'd)

GA16DE for Australia

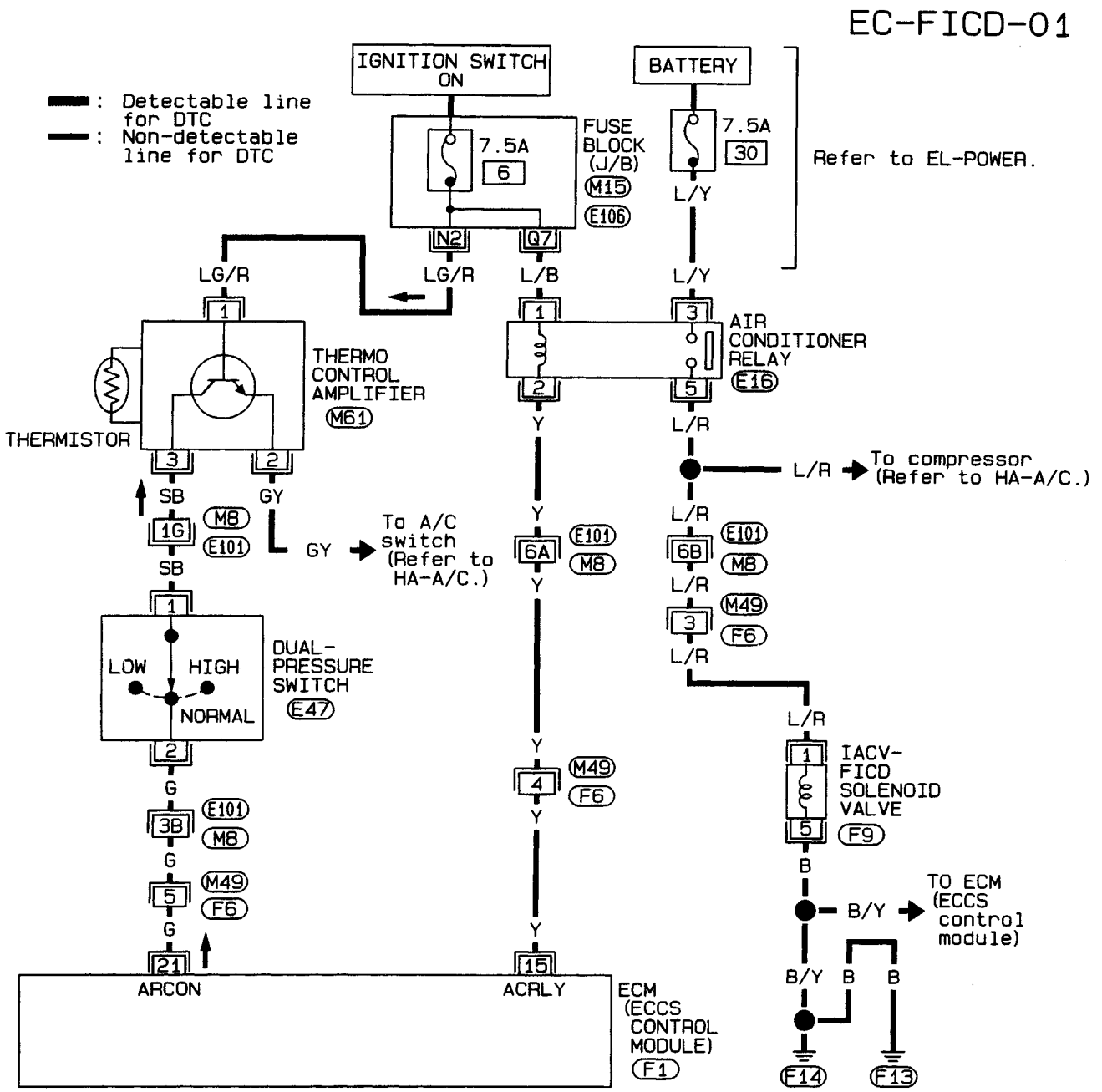

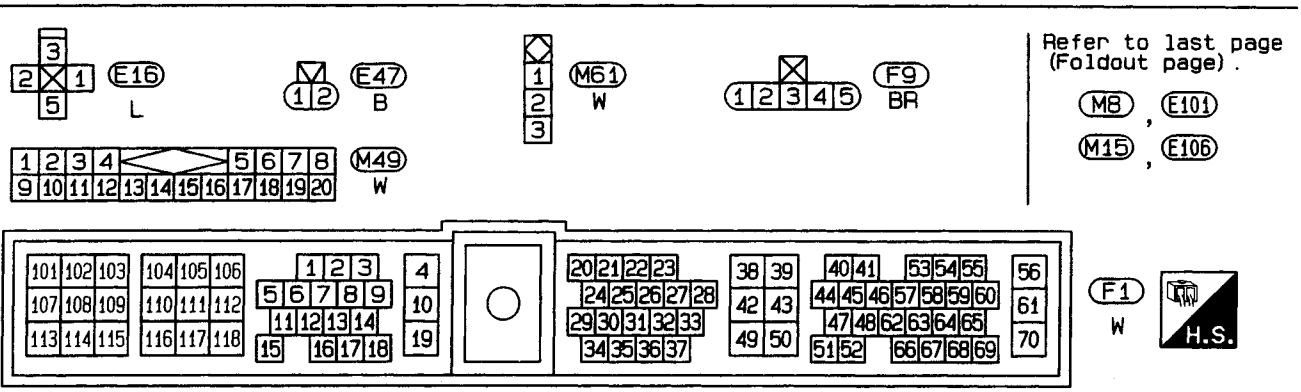

HEC083

Simpo PDF Merge and Split Unregistered Version - http://www.simpopdf.com

IACV-FICD Solenoid Valve (Cont'd)

COMPONENT DESCRIPTION

When the air conditioner is on, the IACV-FICD solenoid valve supplies additional air to adjust to the increased load.

GA15DE

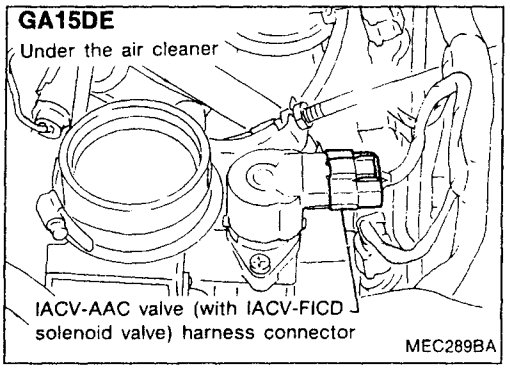

GA16DE except for Europe and Israel

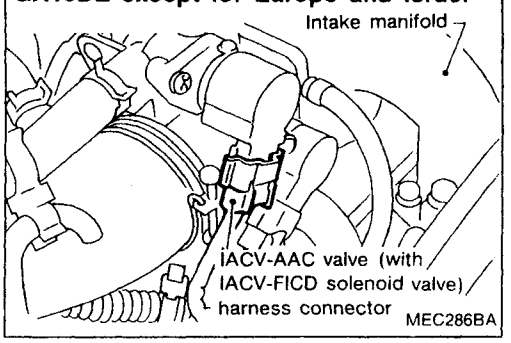

GA14DE, GA16DE for Europe and Israel

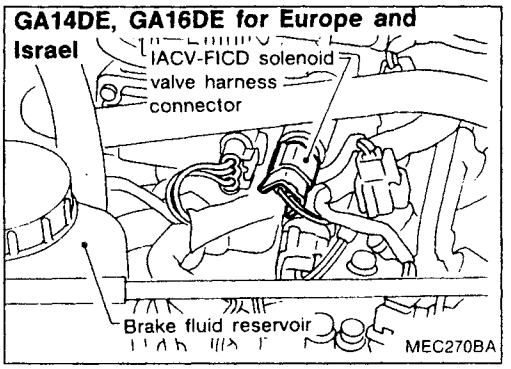

A

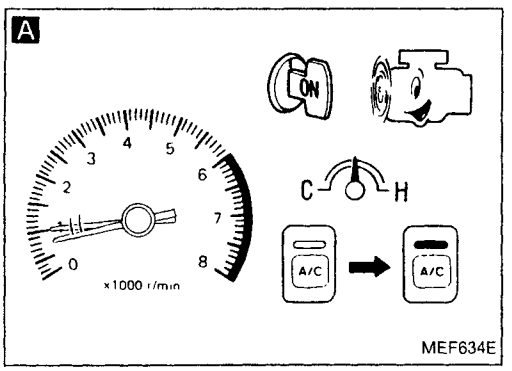

B

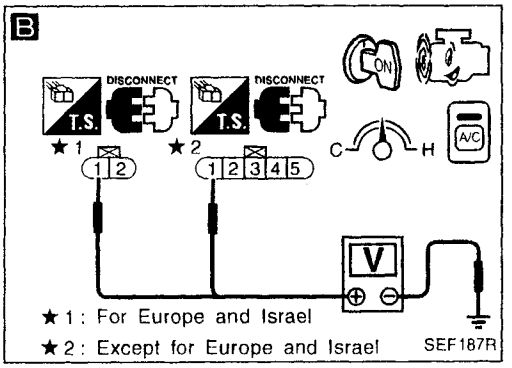

DIAGNOSTIC PROCEDURE

INSPECTION START

A

CHECK OVERALL FUNCTION.
1. Start engine and warm it up sufficiently.
2. Check idle speed.
   Refer to EC-36.
   If NG, adjust idle speed.
3. Turn air conditioner switch and blower fan switch "ON".
4. Recheck idle speed.
   900 rpm or more (A/T in "N" position)

OK → INSPECTION END

NG

Check if air conditioner compressor functions normally.

NG → Refer to "TROUBLE DIAGNOSES" in HA section.

OK

B

CHECK POWER SUPPLY.
1. Turn air conditioner switch "OFF" and stop engine.
2. Disconnect IACV-AAC valve or IACV-FICD solenoid valve harness connector.
3. Restart engine, then turn air conditioner switch and blower fan switch "ON".
4. Check voltage between terminal ① and ground with CONSULT or tester.
   Voltage: Battery voltage

NG → Check the following.
- Harness connectors (F6), (M49)
- Harness connectors (M8), (E101)
- Harness for open or short between IACV-AAC valve or IACV-FICD solenoid valve harness connector and air conditioner relay

If NG, repair harness or connectors.

OK

Ⓐ

Simpo PDF Merge and Split Unregistered Version - http://www.simpopdf.com

IACV-FICD Solenoid Valve (Cont'd)

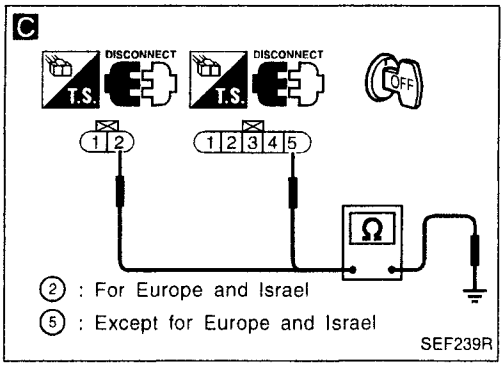

Ⓐ

C

CHECK GROUND CIRCUIT.
1. Turn ignition switch "OFF".
2. Check harness continuity between terminal ⑤ or ② and body ground.
   Continuity should exist.
   If OK, check harness for short.

NG → Repair harness or connectors.

OK ↓

CHECK COMPONENT (IACV-FICD solenoid valve).
Refer to "COMPONENT INSPECTION" below.

NG → Replace IACV-FICD solenoid valve.

OK ↓

Disconnect and reconnect harness connectors in the circuit. Then retest.

Trouble is not fixed. ↓

Check ECM pin terminals for damage or the connection of ECM harness connector. Reconnect ECM harness connector. Then retest.

↓

INSPECTION END

EC

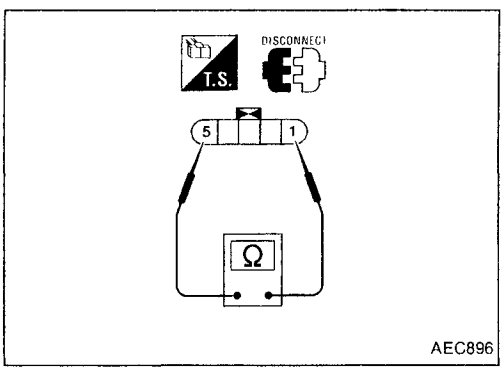

COMPONENT INSPECTION

IACV-FICD solenoid valve — Except for Europe and Israel

1. Disconnect IACV-AAC valve harness connector.
2. Check resistance between terminals ① and ⑤.
   Resistance: 75 - 125Ω [at 25°C (77°F)]
   If NG, replace the solenoid valve.

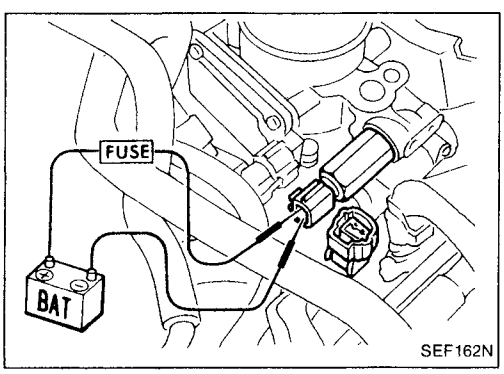

IACV-FICD solenoid valve — Europe and Israel

- Check for clicking sound when applying 12V direct current to terminals.

Simpo PDF Merge and Split Unregistered Version - http://www.simpopdf.com

IACV-FICD Solenoid Valve (Cont'd)

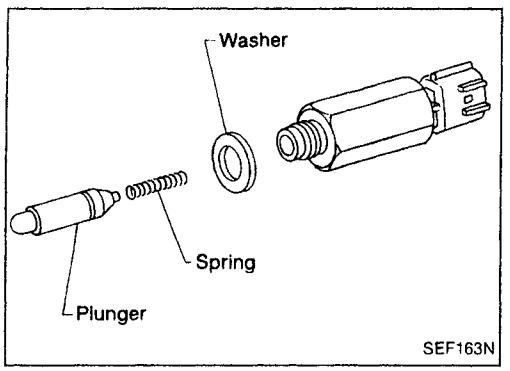

- Check plunger for seizing or sticking.
- Check for broken spring.

Simpo PDF Merge and Split Unregistered Version - http://www.simpopdf.com

Electrical Load Signal

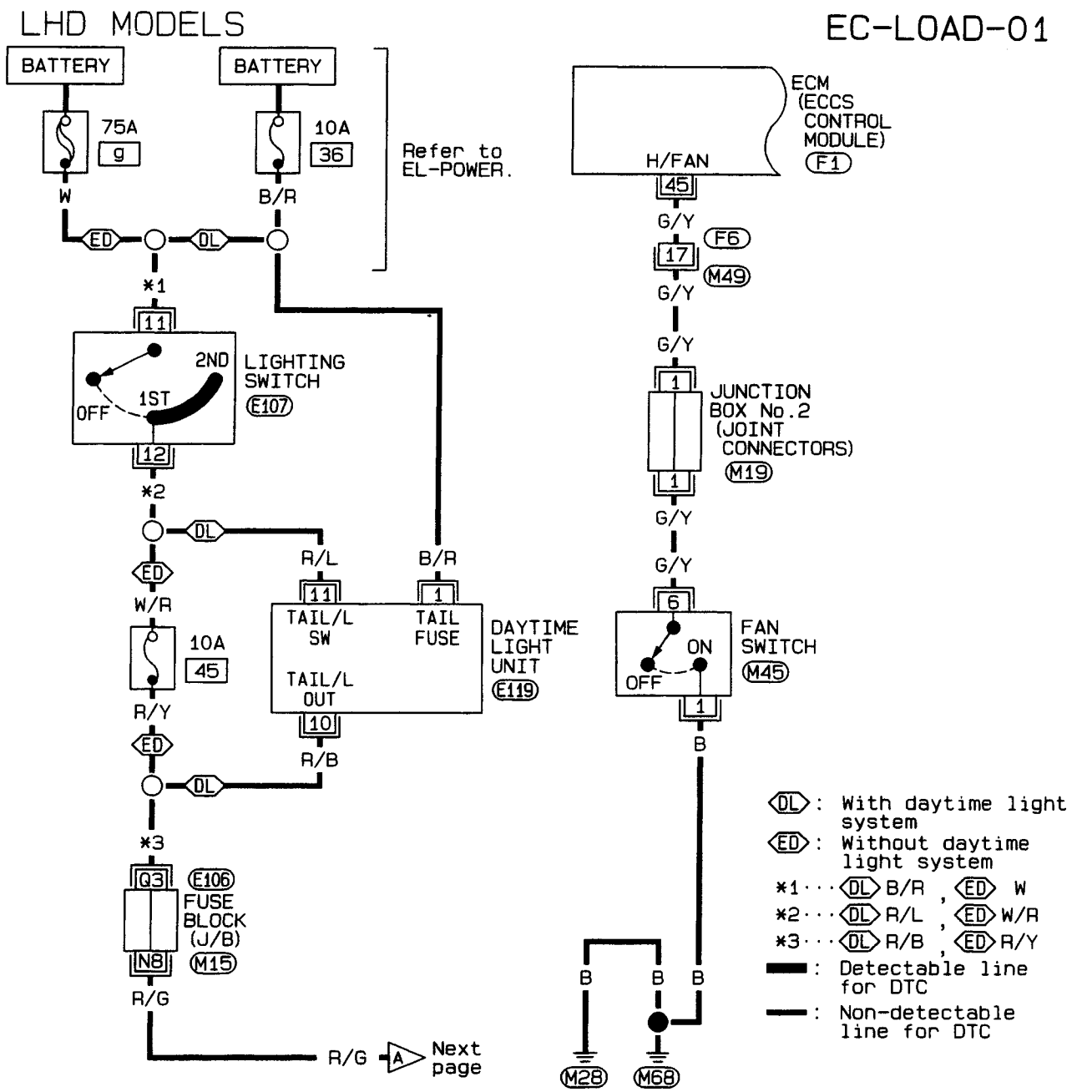

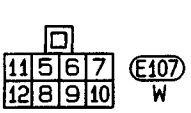

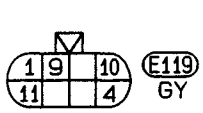

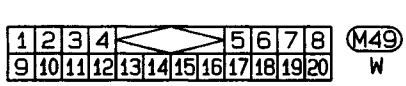

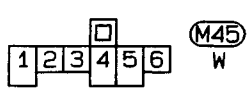

Refer to last page (Foldout page).

M15, E106

M19

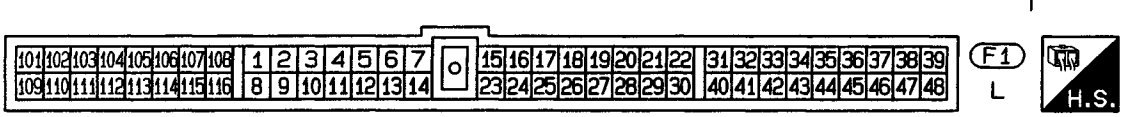

HEC054

Simpo PDF Merge and Split Unregistered Version - http://www.simpopdf.com

Electrical Load Signal (Cont'd)

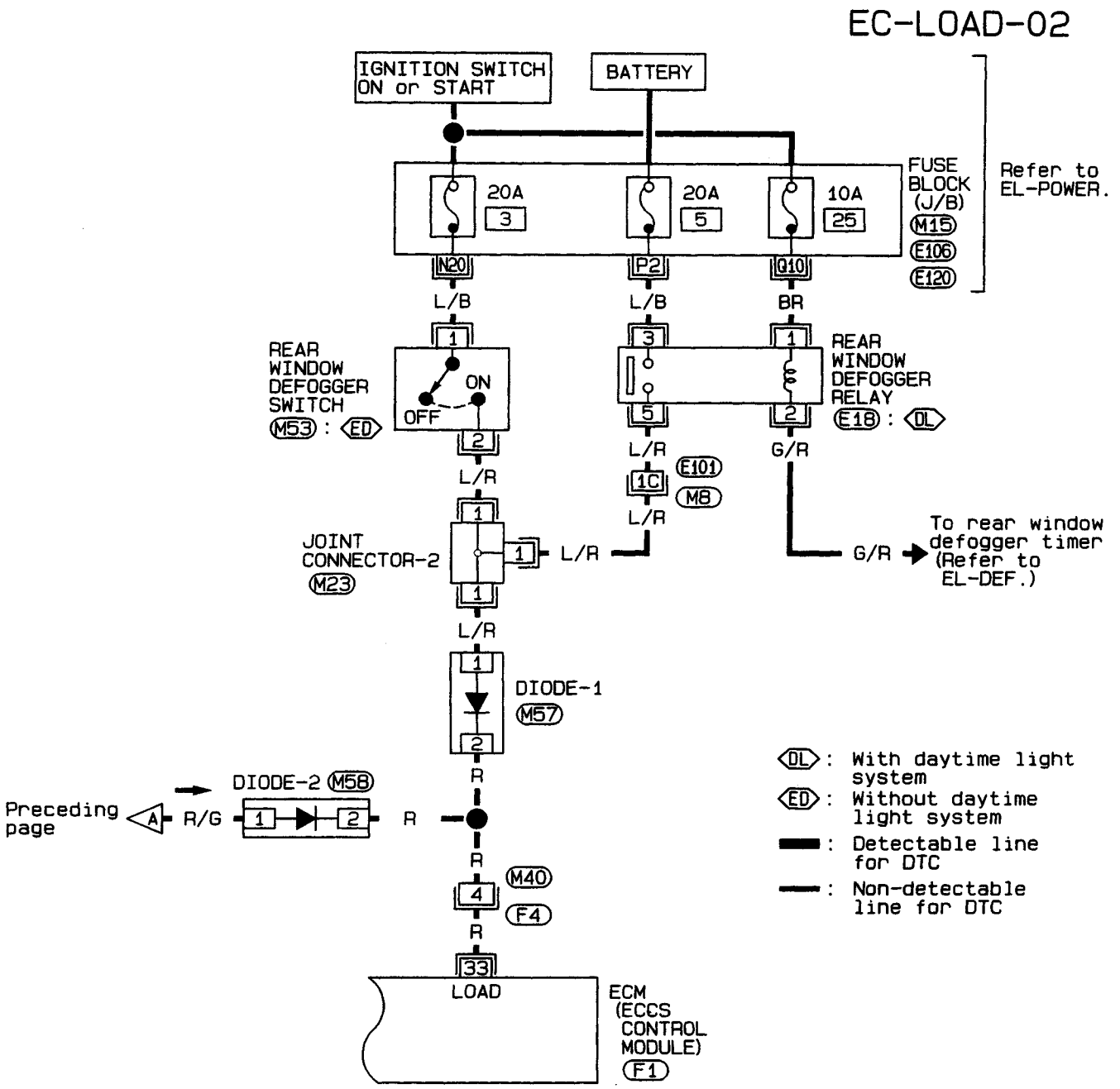

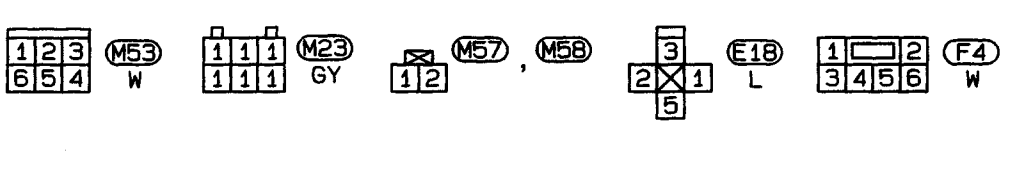

Refer to last page (Foldout page).

M8 , E101

M15 , E106 , E120

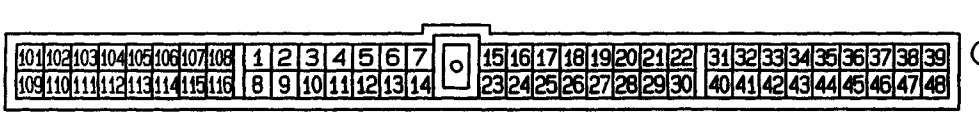

HEC055

Simpo PDF Merge and Split Unregistered Version - http://www.simpopdf.com

Electrical Load Signal (Cont'd)

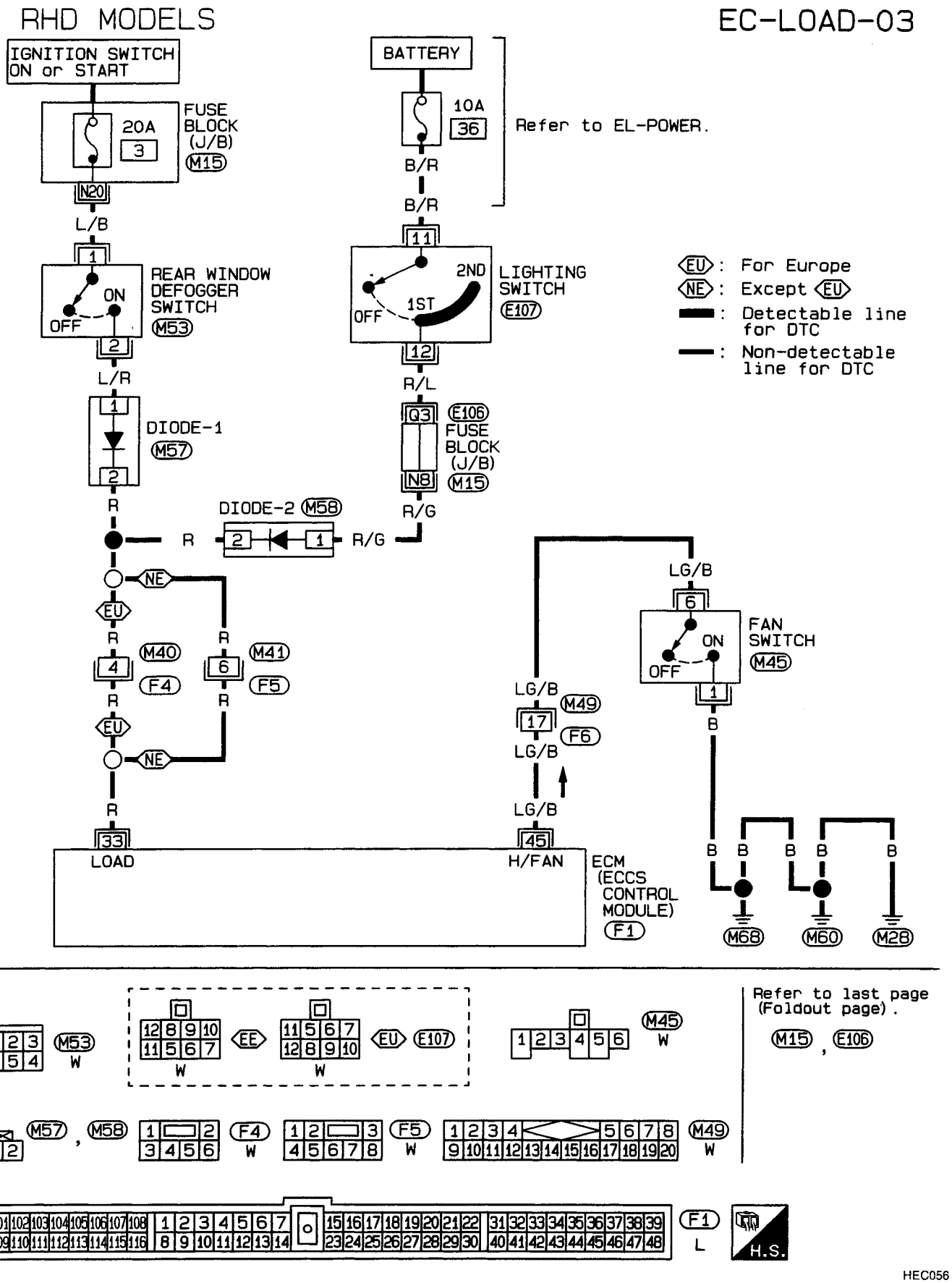

HEC056

Simpo PDF Merge and Split Unregistered Version - http://www.simpopdf.com

Electrical Load Signal (Cont'd)

GA16DE for Australia

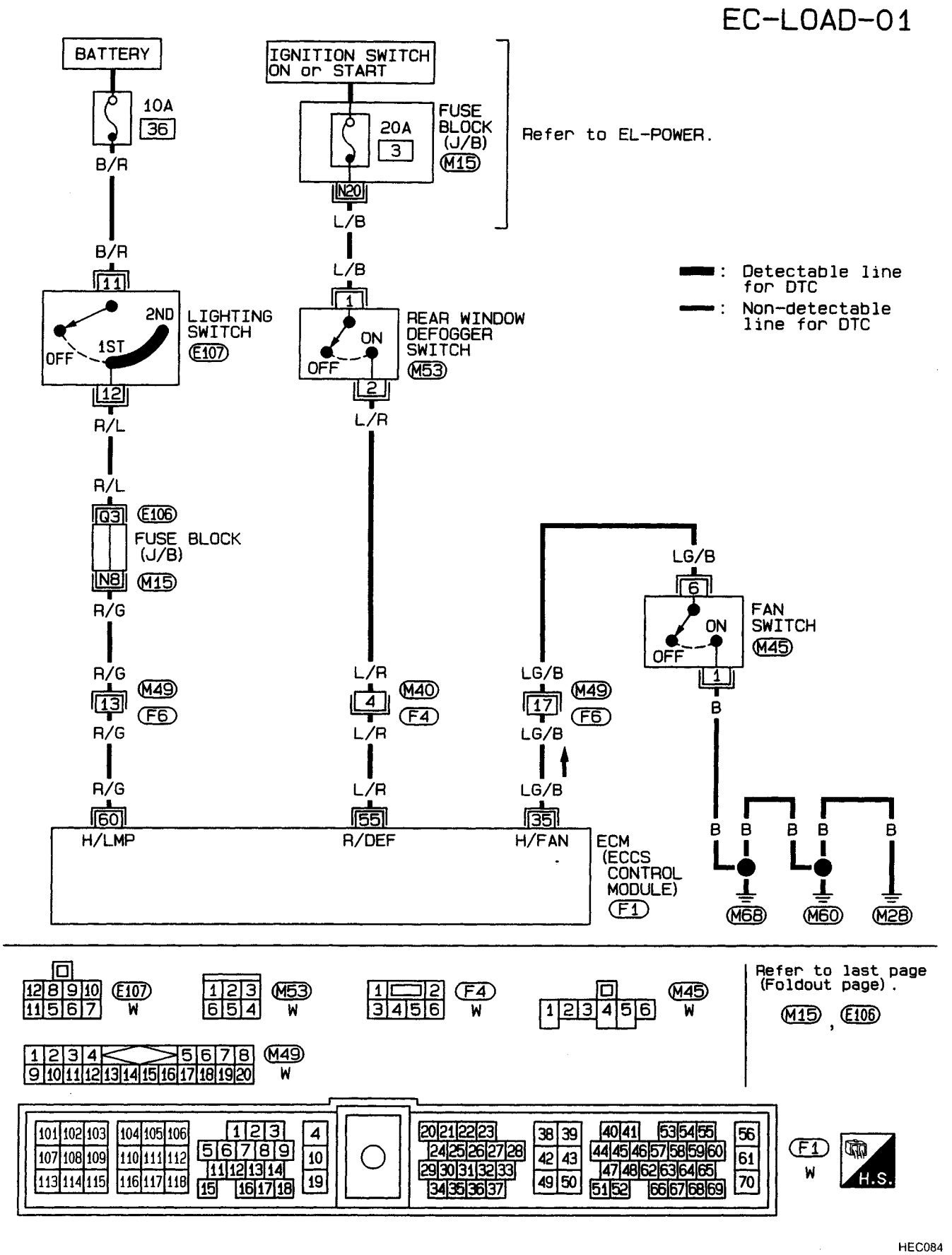

Simpo PDF Merge and Split Unregistered Version - http://www.simpopdf.com

Electrical Load Signal (Cont'd)

DIAGNOSTIC PROCEDURE

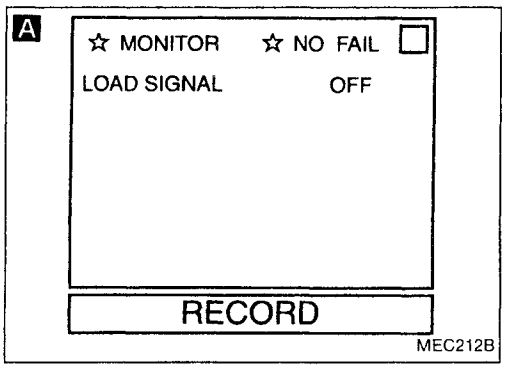

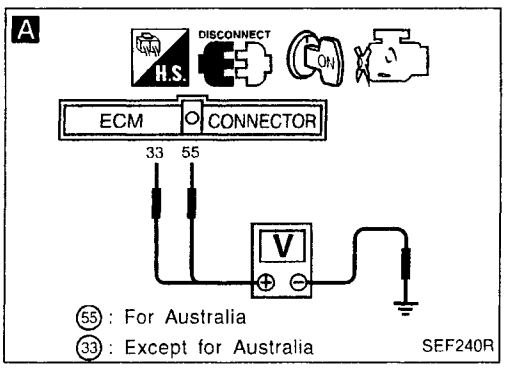

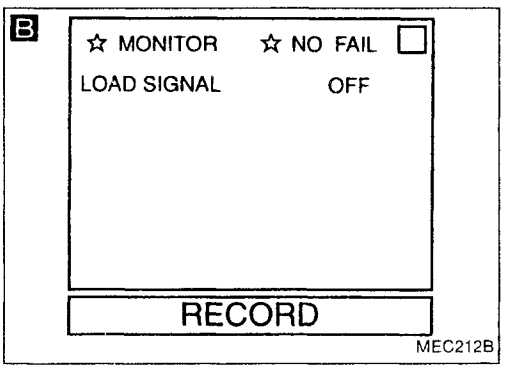

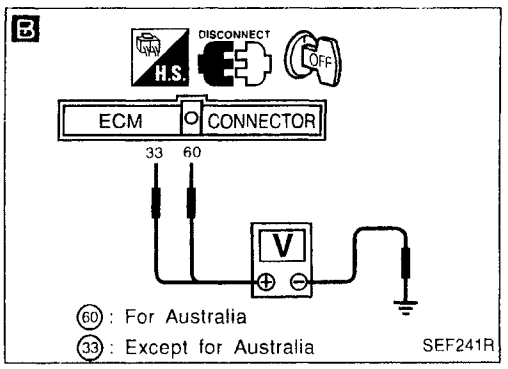

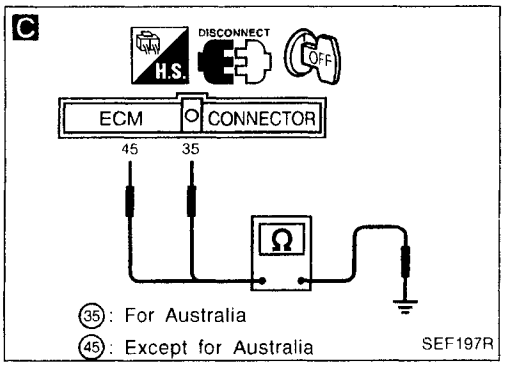

INSPECTION START

A

CHECK OVERALL FUNCTION-I.
1) Turn ignition switch "ON".
2) Check "LOAD SIGNAL" in "DATA MONITOR" mode with CONSULT.
Rear window defogger switch is "ON": ON
Rear window defogger switch is "OFF": OFF

OR

2) Check voltage between ECM terminal 55 or 33 and ground under the following conditions.
Voltage:
Rear window defogger switch is "ON".
Battery voltage
Rear window defogger switch is "OFF".
Approximately 0V

NG → Check rear window defogger circuit. (Go to Procedure A.)

OK

B

CHECK OVERALL FUNCTION-II.
1) Turn rear window defogger switch "OFF".
2) Check "LOAD SIGNAL" in "DATA MONITOR" mode with CONSULT.
Lighting switch is "ON": ON
Lighting switch is "OFF": OFF

OR

2) Turn ignition switch "OFF".
3) Check voltage between ECM terminal 60 or 33 and ground under the following conditions.
Voltage:
Lighting switch is "ON".
Battery voltage
Lighting switch is "OFF".
Approximately 0V

NG → Check lighting switch circuit. (Go to Procedure B.)

OK

Ⓐ

EC

Simpo PDF Merge and Split Unregistered Version - http://www.simpopdf.com

Electrical Load Signal (Cont'd)

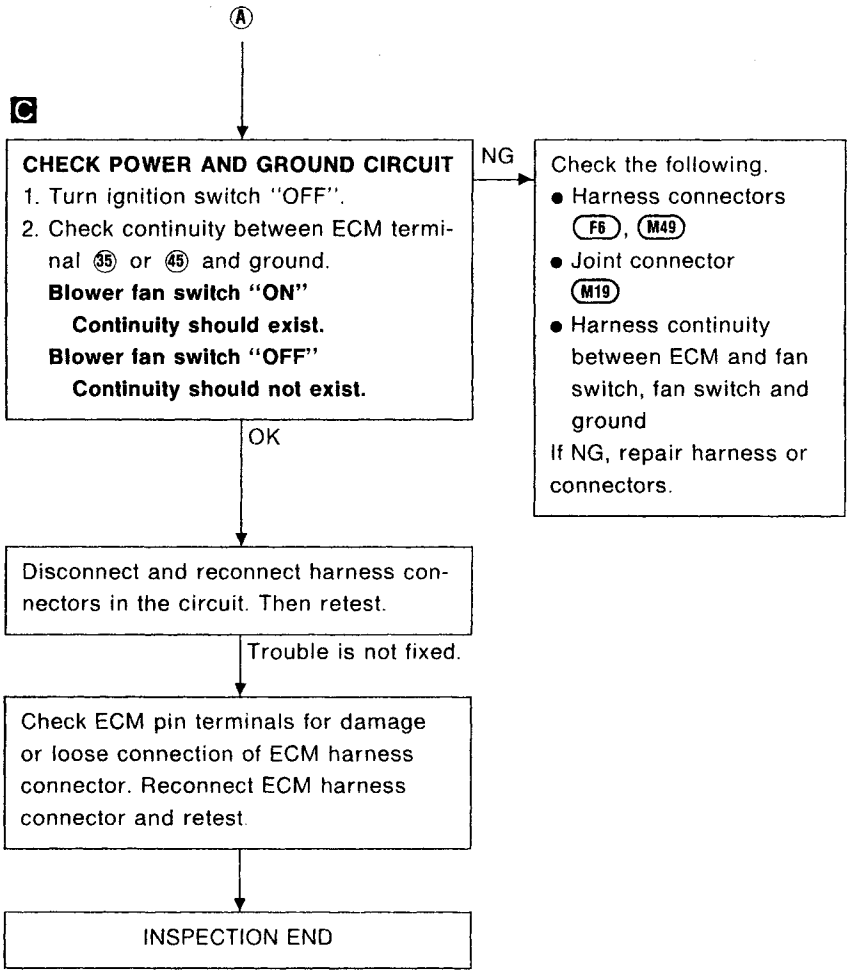

Simpo PDF Merge and Split Unregistered Version - http://www.simpopdf.com

Electrical Load Signal (Cont'd)

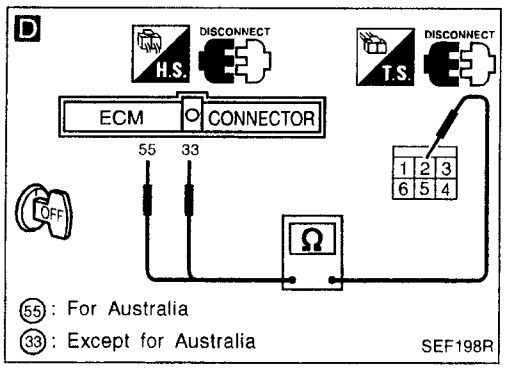

PROCEDURE A

INSPECTION START

Check if rear window defogger functions normally.

NG → Check rear window defogger circuit. (Refer to "REAR WINDOW DEFOGGER" in EL section.)

OK

D

CHECK INPUT SIGNAL CIRCUIT.
1. Turn rear window defogger switch "OFF".
2. Turn ignition switch "OFF".
3. Disconnect ECM harness connector and rear window defogger switch harness connector.
4. Check harness continuity between ECM terminal 33 or 55 and terminal 2.

Continuity should exist.

If OK, check harness for short.

NG → Check the following.
- Harness connectors F4, M40 or F5, M41
- Diode M57
- Joint connector M23
- Harness for open or short between ECM and rear window defogger switch

If NG, repair harness or connectors.

OK

Disconnect and reconnect harness connectors in the circuit. Then retest.

Trouble is not fixed.

Check ECM pin terminals for damage or the connection of ECM harness connector. Reconnect ECM harness connector and retest.

INSPECTION END

EC

Simpo PDF Merge and Split Unregistered Version - http://www.simpopdf.com

Electrical Load Signal (Cont'd)

E Except for Australia

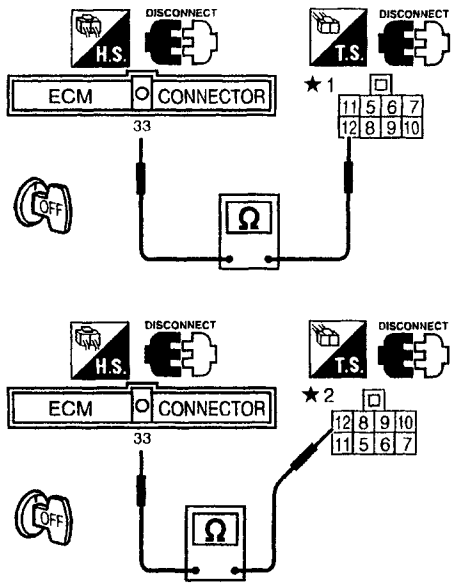

★1 : LHD models and RHD models for Europe
★2 : RHD models except for Europe

SEF188R

E For Australia

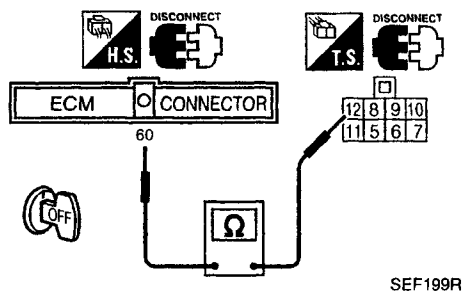

SEF199R

PROCEDURE B

INSPECTION START

Check if lamps light when lighting switch is turned "ON".

NG → Check lighting switch circuit. (Refer to "COMBINATION SWITCH" in EL section.)

OK

E

CHECK INPUT SIGNAL CIRCUIT.
1. Turn ignition switch "OFF".
2. Disconnect ECM harness connector and lighting switch harness connector.
3. Check harness continuity between ECM terminal (33) or (60) and terminal (12).

Continuity should exist.

If OK, check harness for short.

NG → Check the following.
- Harness connectors (F4), (M40) or (F5), (M41) or (F6), (M49)
- Harness connectors (M15), (E106)
- Diode (M58)
- 10A fuse
- Daytime light unit
- Harness for open or short between lighting switch and diode

If NG, repair harness or connectors.

OK

Disconnect and reconnect harness connectors in the circuit. Then retest.

Trouble is not fixed.

Check ECM pin terminals for damage or the connection of ECM harness connector. Reconnect ECM harness connector and retest.

INSPECTION END

Simpo PDF Merge and Split Unregistered Version - http://www.simpopdf.com

Torque Converter Clutch Solenoid Valve

EC-LKUP-01

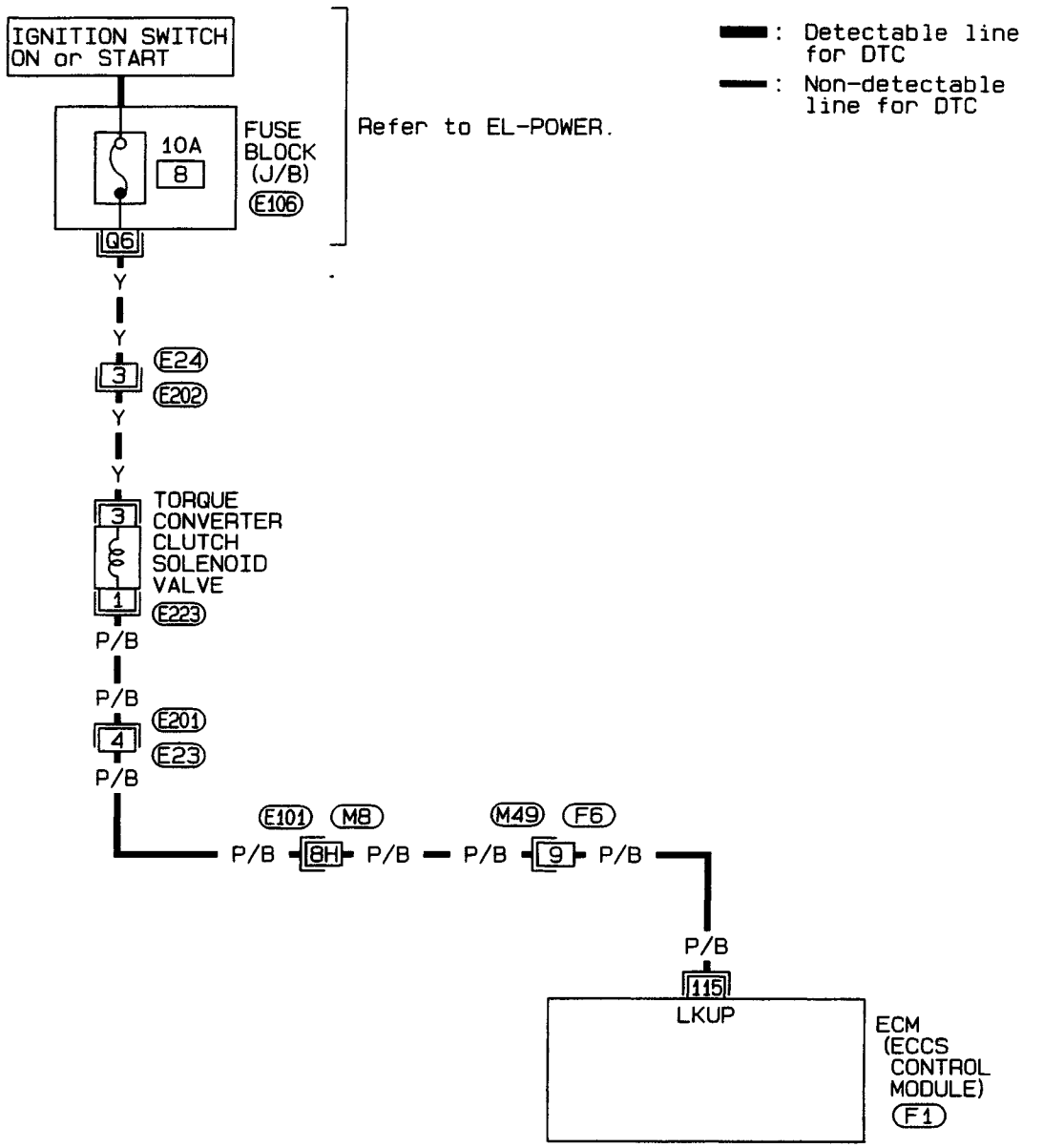

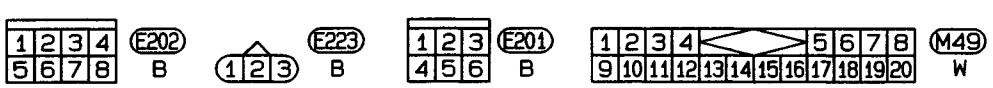

Refer to last page (Foldout page).

M8, E101
E106

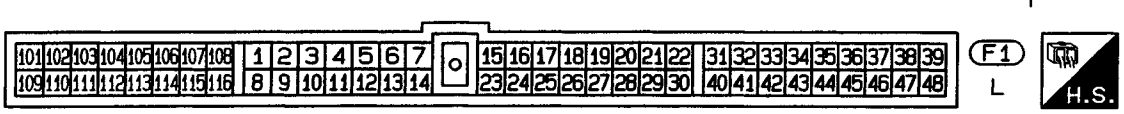

HEC057

Simpo PDF Merge and Split Unregistered Version - http://www.simpopdf.com

Torque Converter Clutch Solenoid Valve (Cont'd)

GA16DE for Australia (A/T models)

EC-LKUP-01

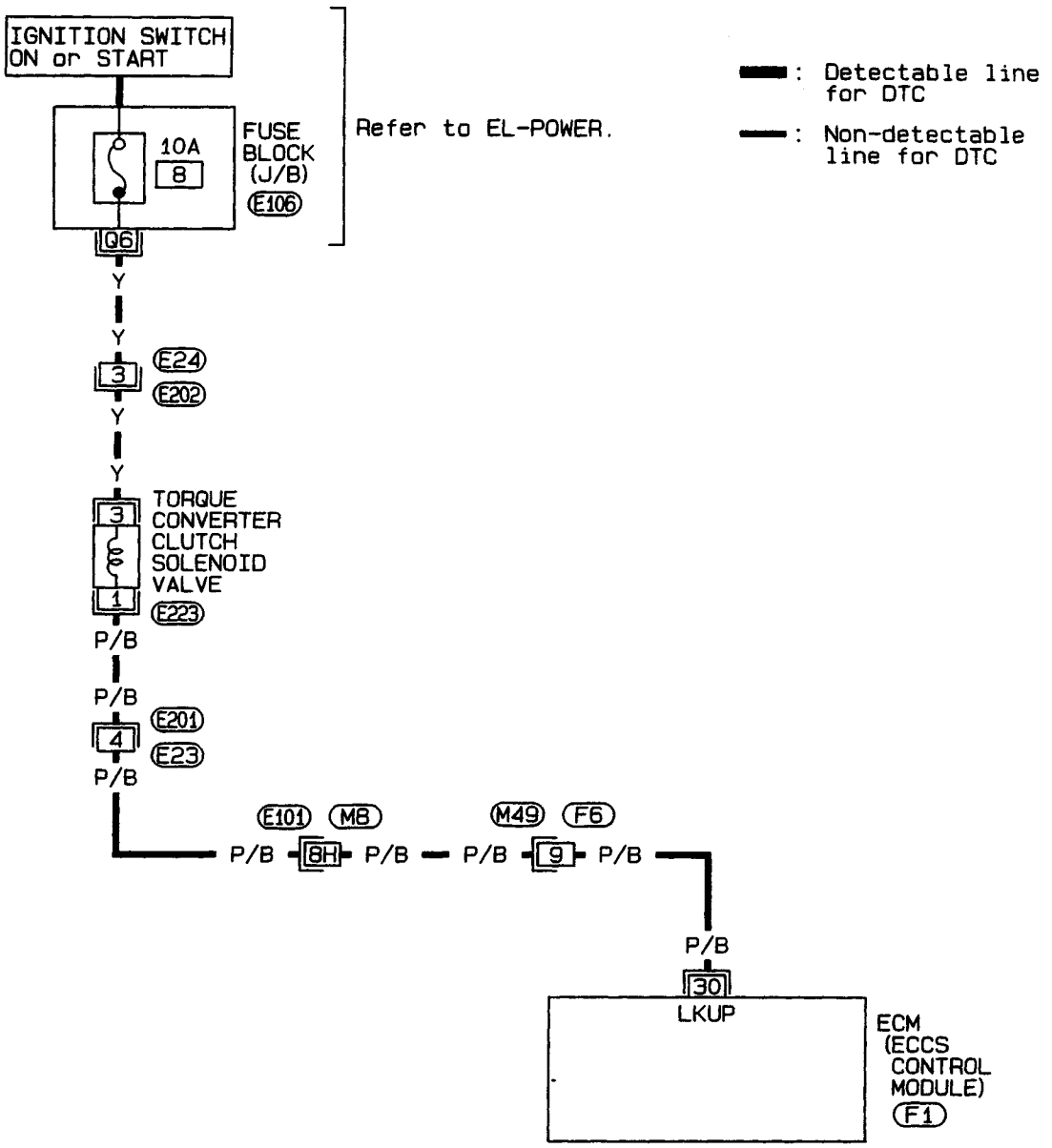

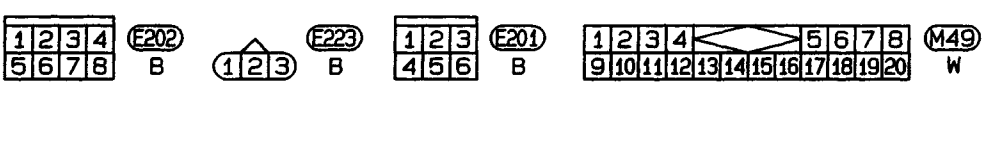

Refer to last page (Foldout page).

M8, E101, E106

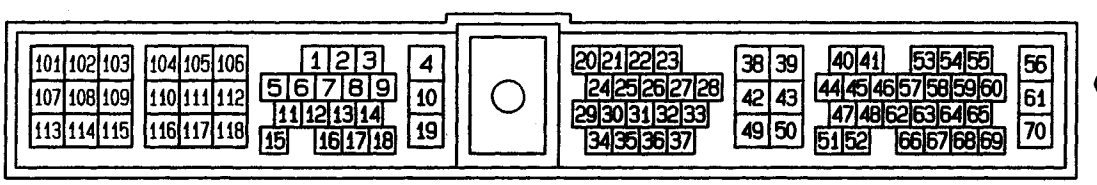

HEC085

Simpo PDF Merge and Split Unregistered Version - http://www.simpopdf.com

Torque Converter Clutch Solenoid Valve (Cont'd)

SYSTEM DESCRIPTION

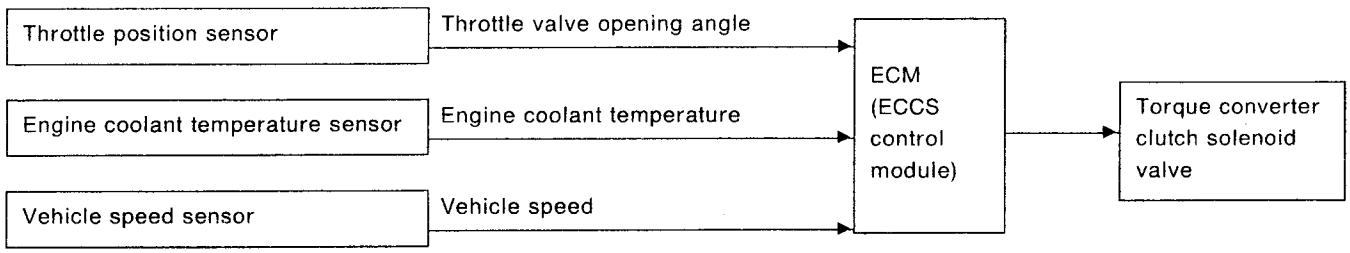

The A/T lock-up is controlled by the ECM through the torque converter clutch solenoid valve. When the ECM detects any of the following conditions, the ECM switches the torque converter clutch solenoid valve OFF to accomplish lock-up operation. While the vehicle is in conditions other than below, the torque converter clutch solenoid valve is always set to ON, releasing the lock-up operation.

- Throttle position is open.
- Engine coolant temperature is 60°C (140°F) or more.
- Vehicle speed is 58 km/h (36 MPH) or more.

EC

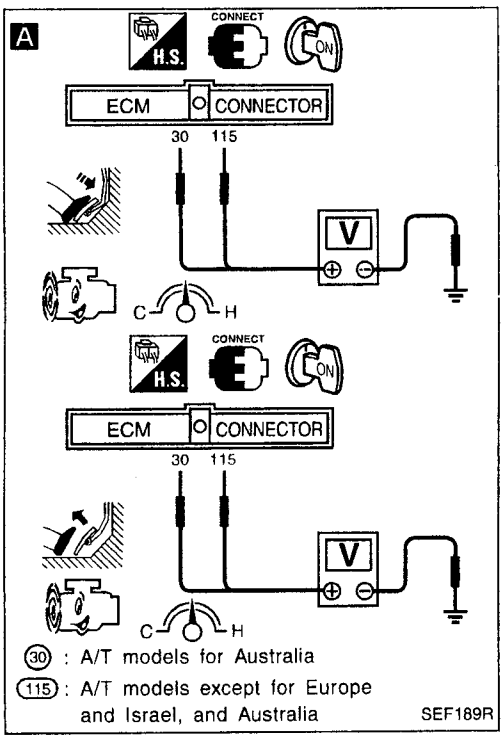

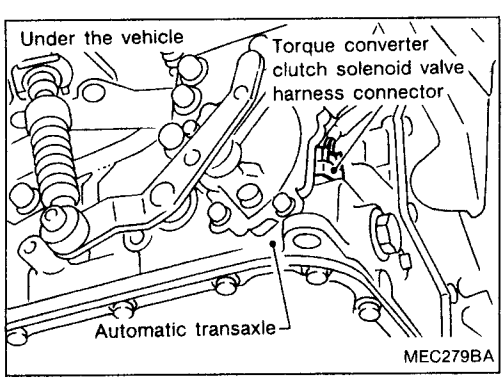

DIAGNOSTIC PROCEDURE

INSPECTION START

A

CHECK CONTROL FUNCTION.
1. Jack up drive wheels.
2. Start engine and warm it up sufficiently.
3. Shift selector lever to "D" position.
4. Check voltage between ECM terminal (115) or (30) and ground under the following conditions.

Voltage:
Accelerator pedal is depressed [Vehicle speed is above 58 km/h (36 MPH).]
Battery voltage
Accelerator pedal is fully released
Approximately 0V

OK → CHECK COMPONENT (Torque converter clutch solenoid valve).
Refer to "Electrical Components Inspection" in AT section.
If NG, replace torque converter clutch solenoid valve.

OK → INSPECTION END

NG → (A)

Simpo PDF Merge and Split Unregistered Version - http://www.simpopdf.com

Torque Converter Clutch Solenoid Valve (Cont'd)

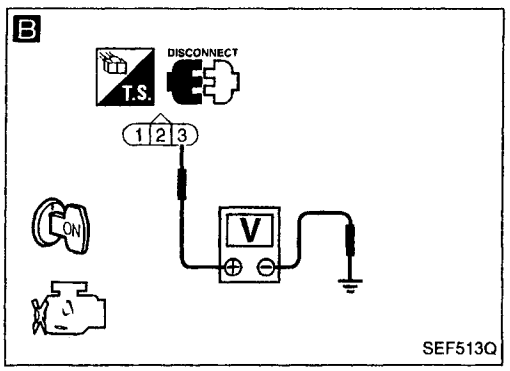

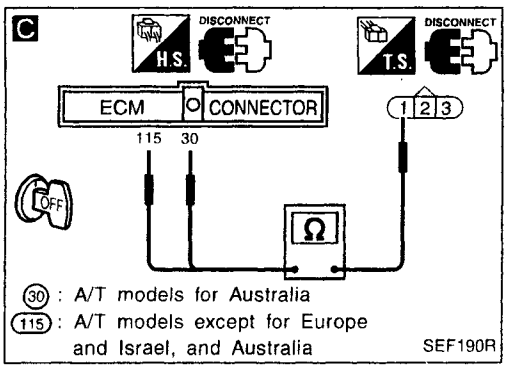

Ⓐ

B

CHECK POWER SUPPLY.
1. Stop engine.
2. Disconnect torque converter clutch solenoid valve harness connector.
3. Turn ignition switch "ON".
4. Check voltage between terminal ③ and ground.
   Voltage: Battery voltage

NG → Check the following.
- Harness connectors E24, E202
- 10A fuse
- Harness for open or short between torque converter clutch solenoid valve and fuse

If NG, repair harness or connectors.

OK ↓

C

CHECK OUTPUT SIGNAL CIRCUIT.
1. Turn ignition switch "OFF".
2. Disconnect ECM harness connector.
3. Check harness continuity between ECM terminal 115 or 30 and terminal ①.
   Continuity should exist.
   If OK, check harness for short.

NG → Check the following.
- Harness connectors F6, M49
- Harness connectors M8, E101
- Harness connectors E23, E201
- Harness for open or short between ECM and torque converter clutch solenoid valve

If NG, repair harness or connectors.

OK ↓

CHECK COMPONENT
(Torque converter clutch solenoid valve).
Refer to "Electrical Components Inspection" in AT section.

NG → Replace torque converter clutch solenoid valve.

OK ↓

Disconnect and reconnect harness connectors in the circuit. Then retest.

Trouble is not fixed. ↓

Check ECM pin terminals for damage or the connection of ECM harness connector. Reconnect ECM harness connector and retest.

↓

INSPECTION END

Simpo PDF Merge and Split Unregistered Version - http://www.simpopdf.com

MIL & Data Link Connectors

LHD models

EC-MIL-01

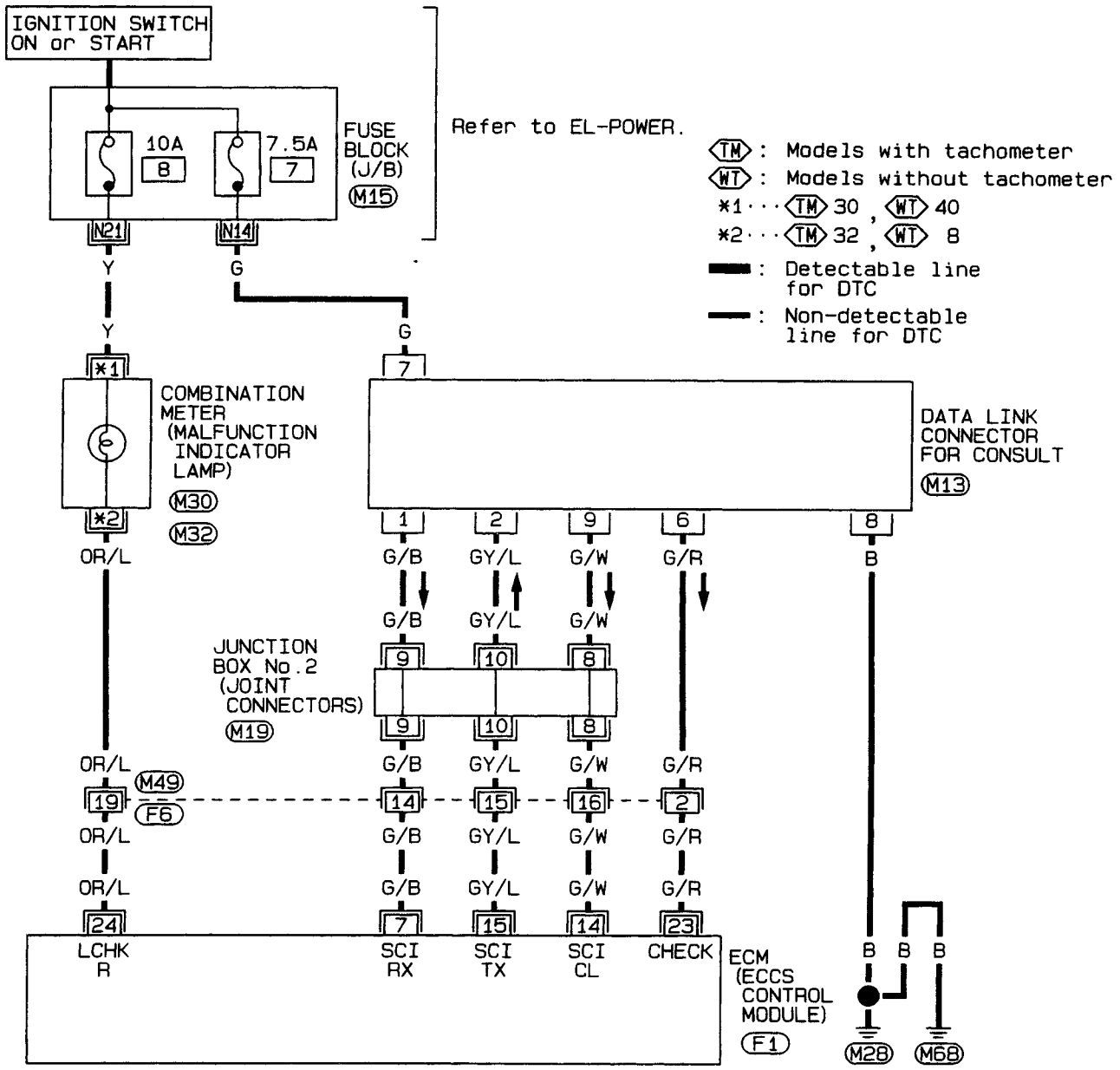

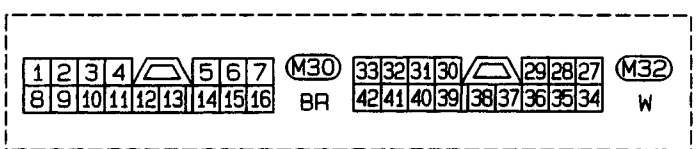

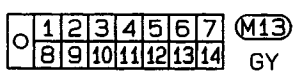



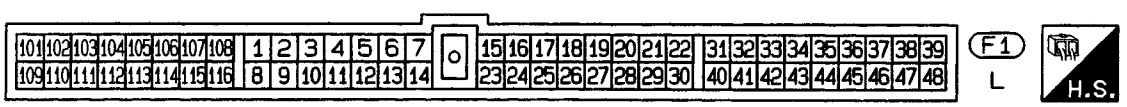

Refer to last page (Foldout page).

M15

M19

HEC058

Simpo PDF Merge and Split Unregistered Version - http://www.simpopdf.com

MIL & Data Link Connectors (Cont'd)

RHD models

EC-MIL-02

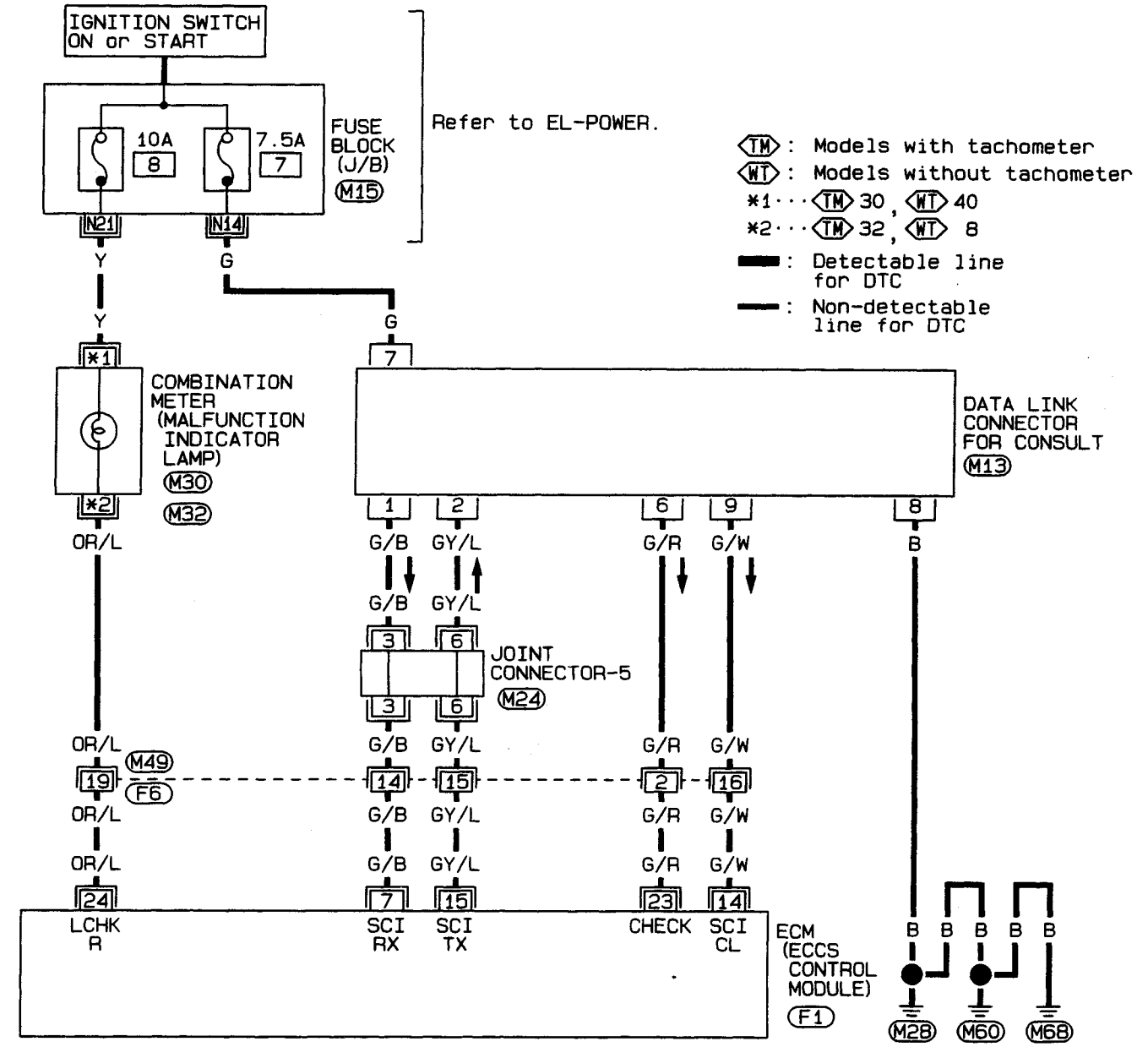

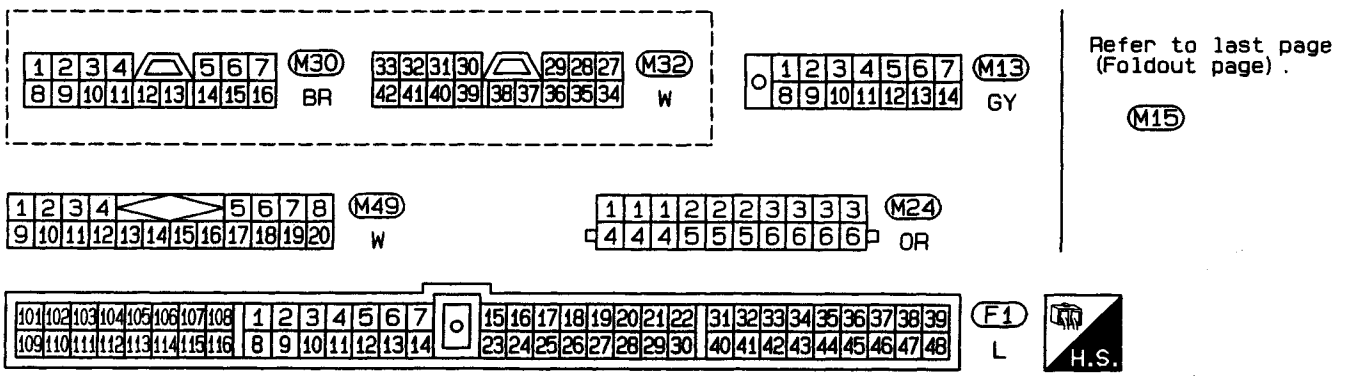

Refer to last page (Foldout page).

M15

HEC059

Simpo PDF Merge and Split Unregistered Version - http://www.simpopdf.com

MIL & Data Link Connectors (Cont'd)

GA16DE for Australia

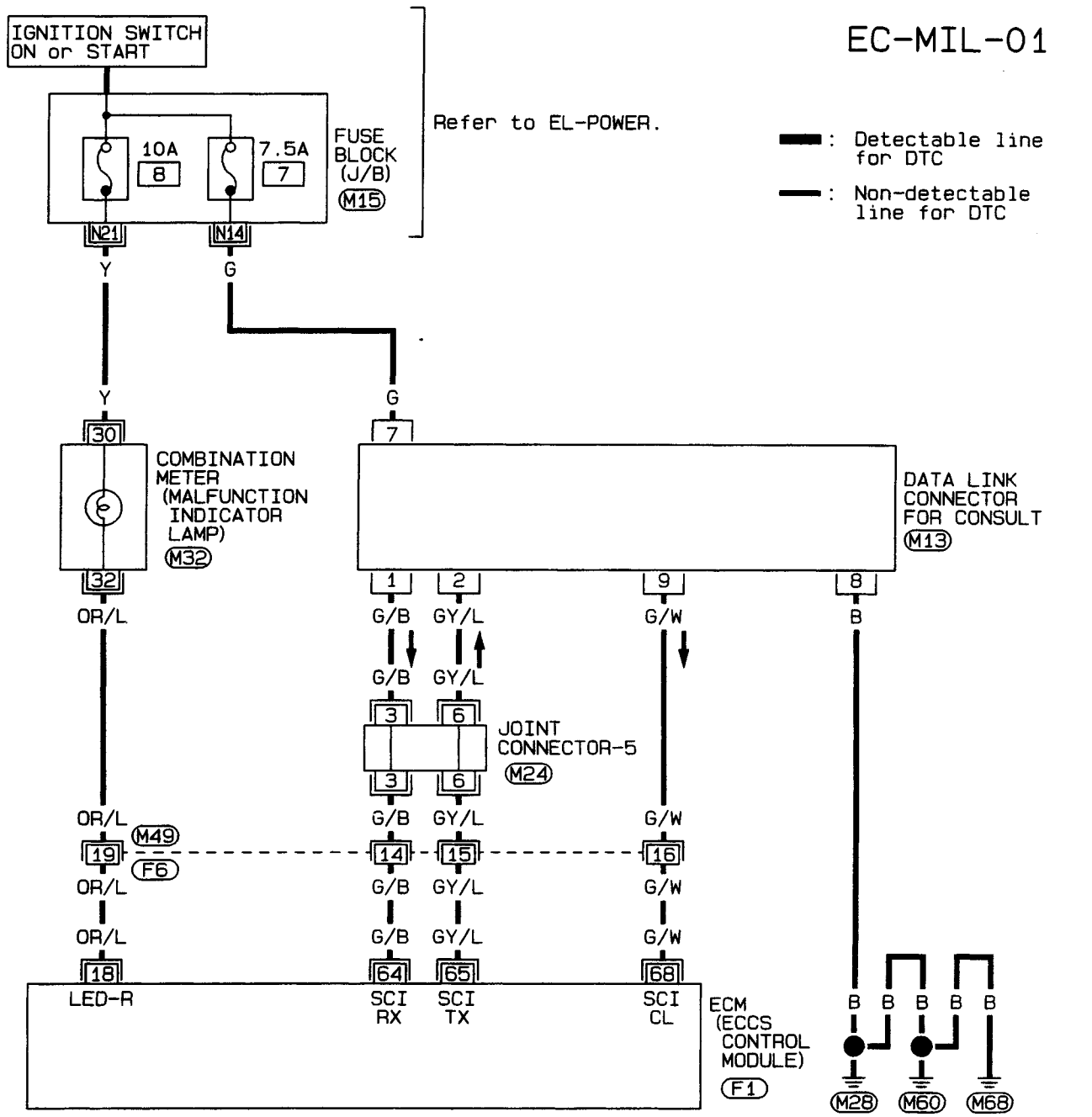

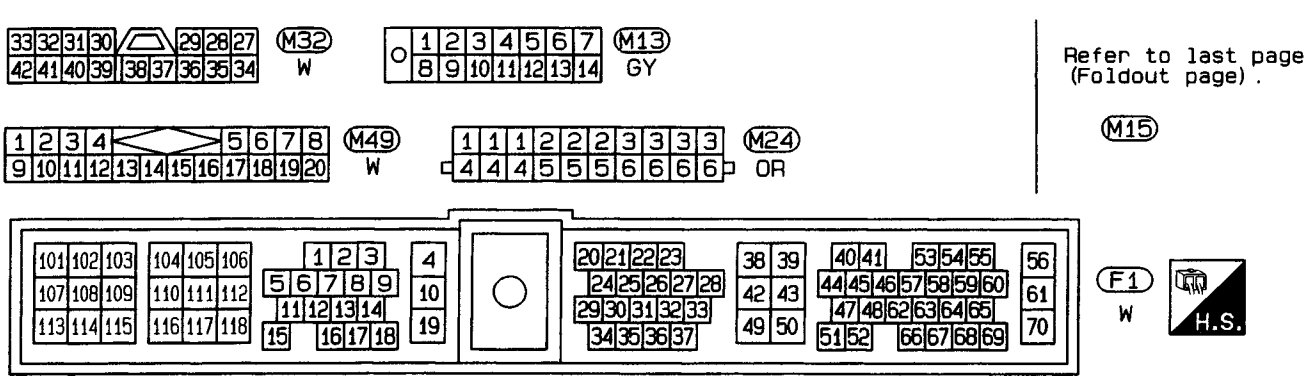

HEC086

Simpo PDF Merge and Split Unregistered Version - http://www.simpopdf.com

Circuit Diagram

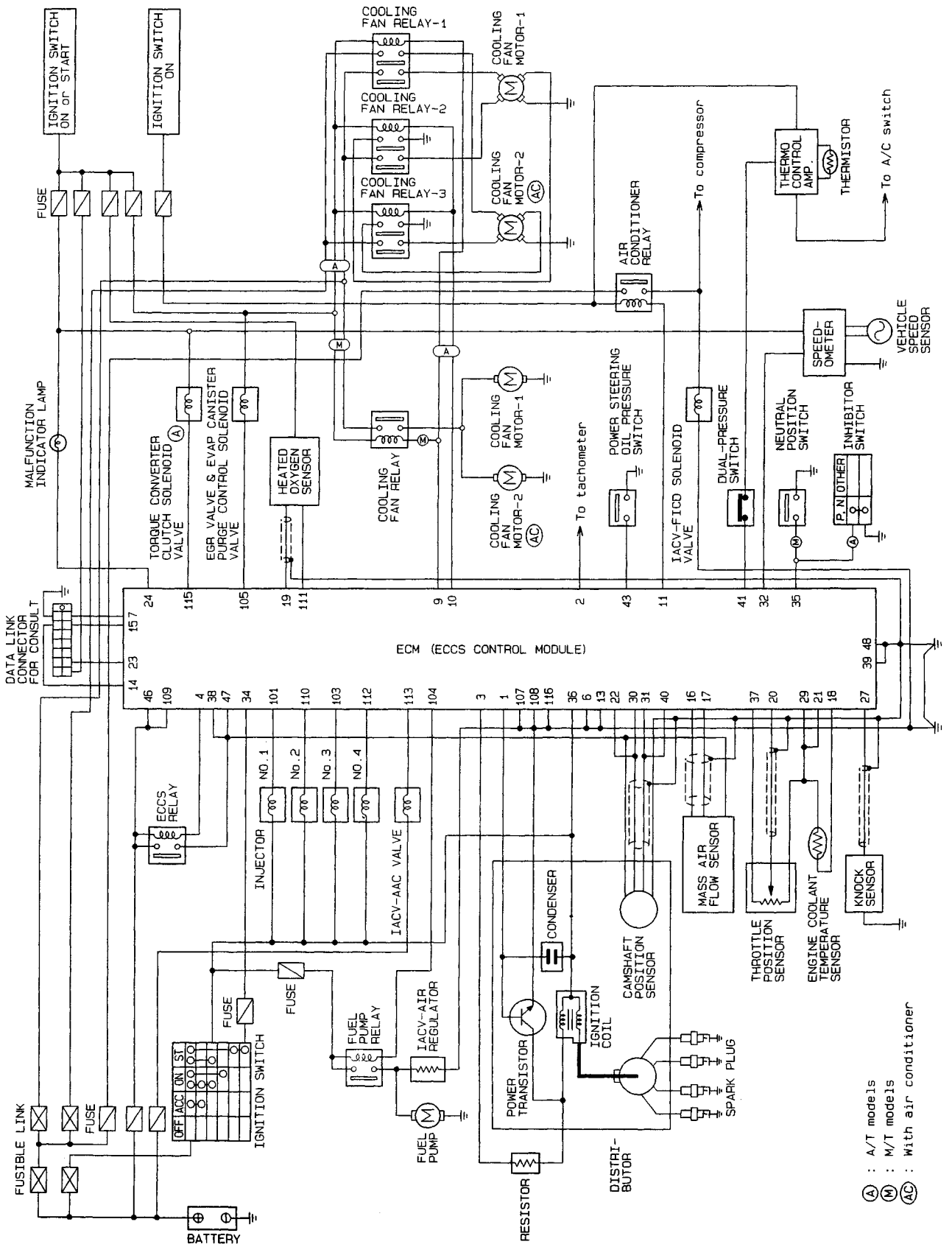

HEC001

Simpo PDF Merge and Split Unregistered Version - http://www.simpopdf.com

System Diagram

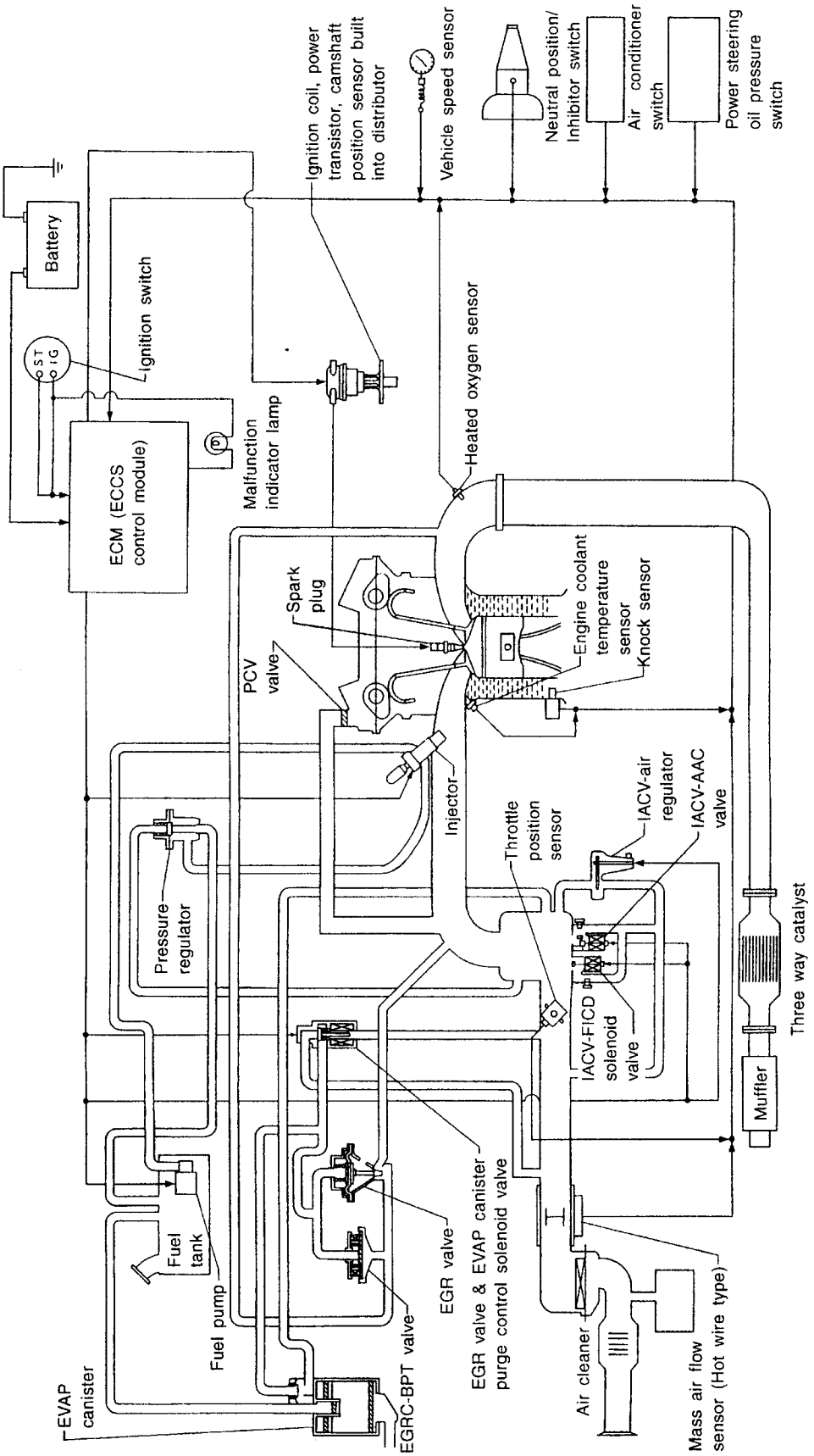

SEF306R

Simpo PDF Merge and Split Unregistered Version - http://www.simpopdf.com

ECCS Component Parts Location

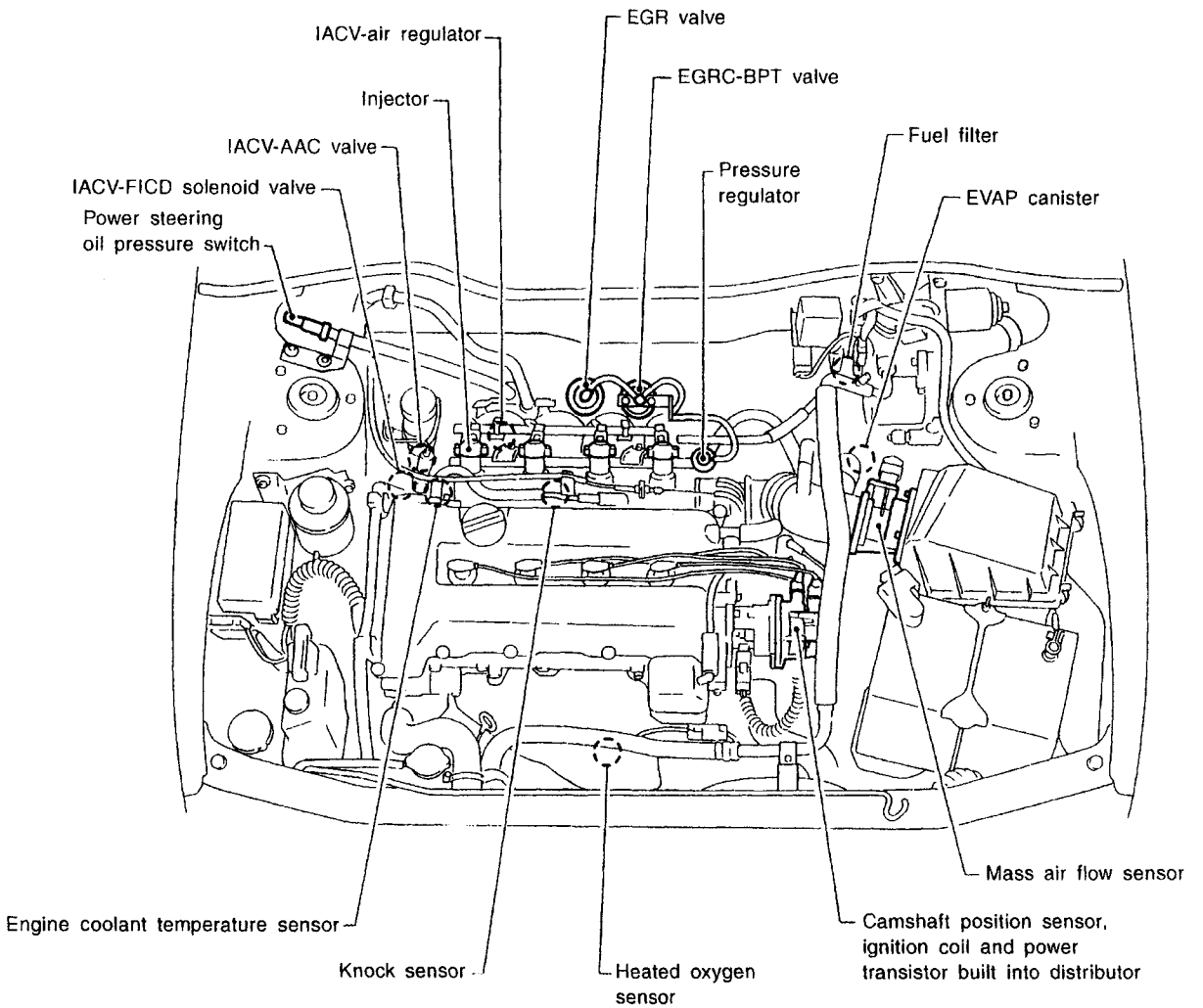

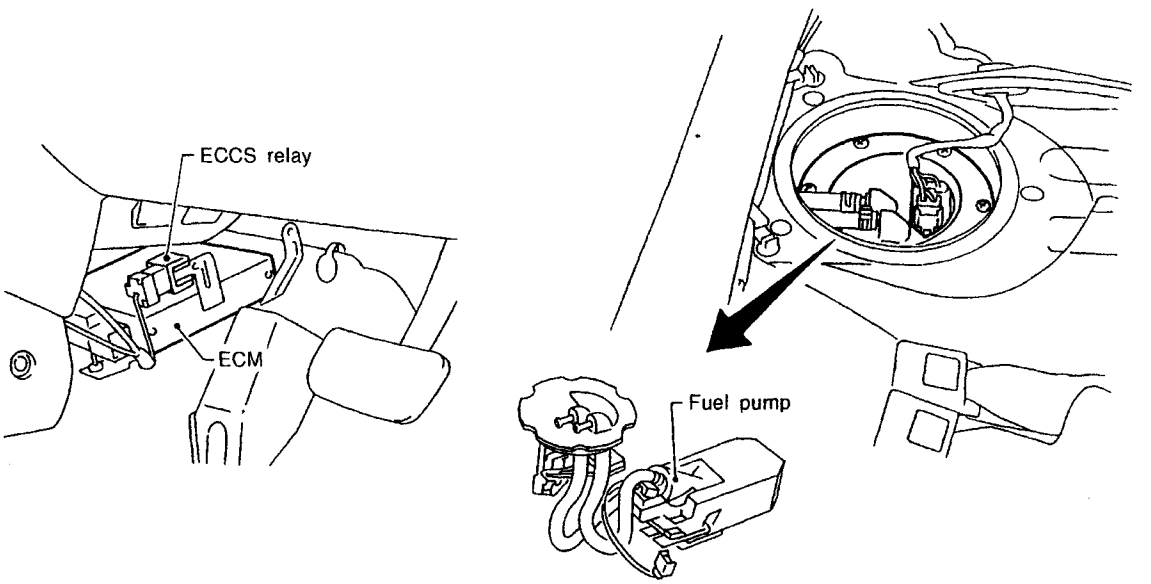

SEF307R

Simpo PDF Merge and Split Unregistered Version - http://www.simpopdf.com

ECCS Component Parts Location (Cont'd)

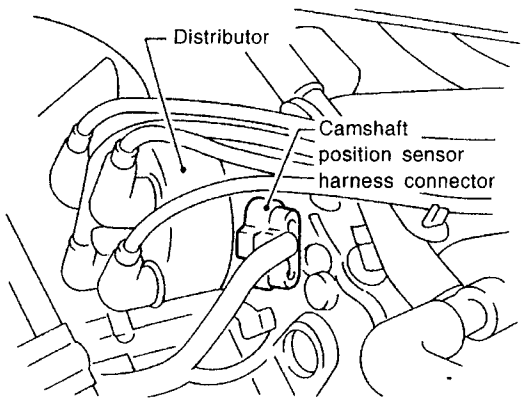

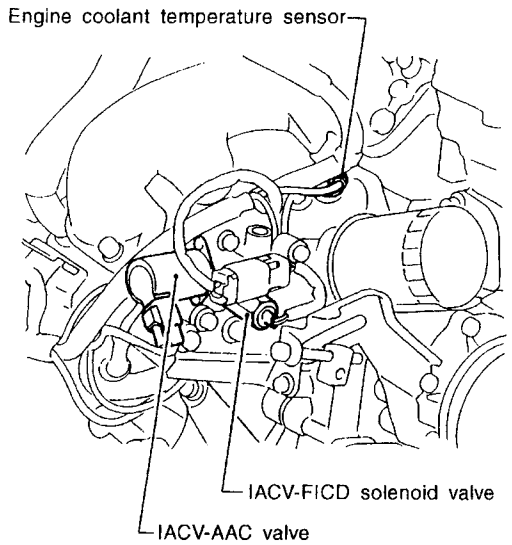

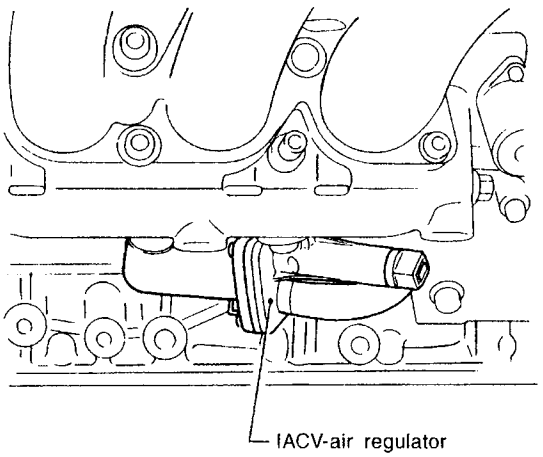

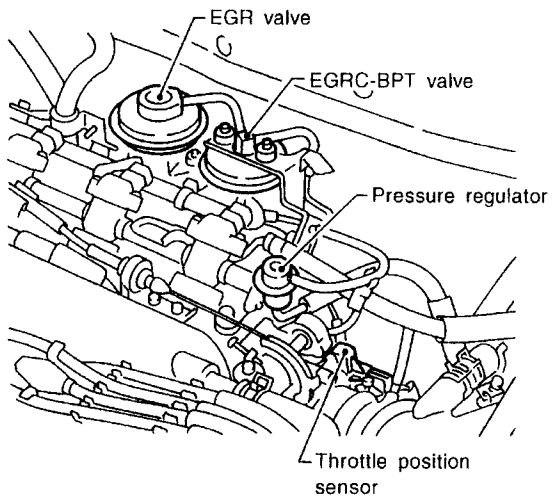

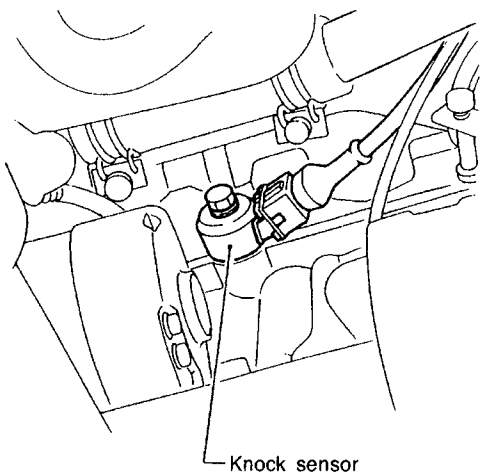

SEF308R

Simpo PDF Merge and Split Unregistered Version - http://www.simpopdf.com

ECCS Component Parts Location (Cont'd)

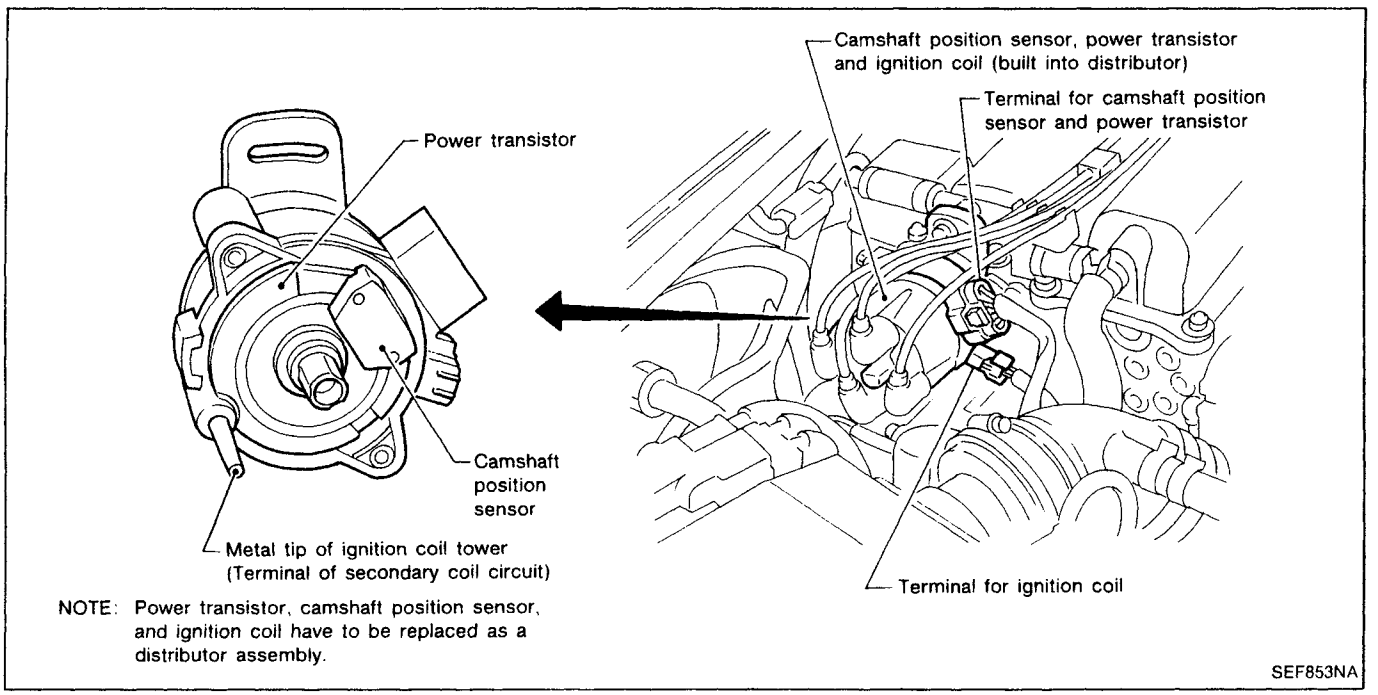

NOTE: Power transistor, camshaft position sensor, and ignition coil have to be replaced as a distributor assembly.

SEF853NA

Simpo PDF Merge and Split Unregistered Version - http://www.simpopdf.com

Vacuum Hose Drawing

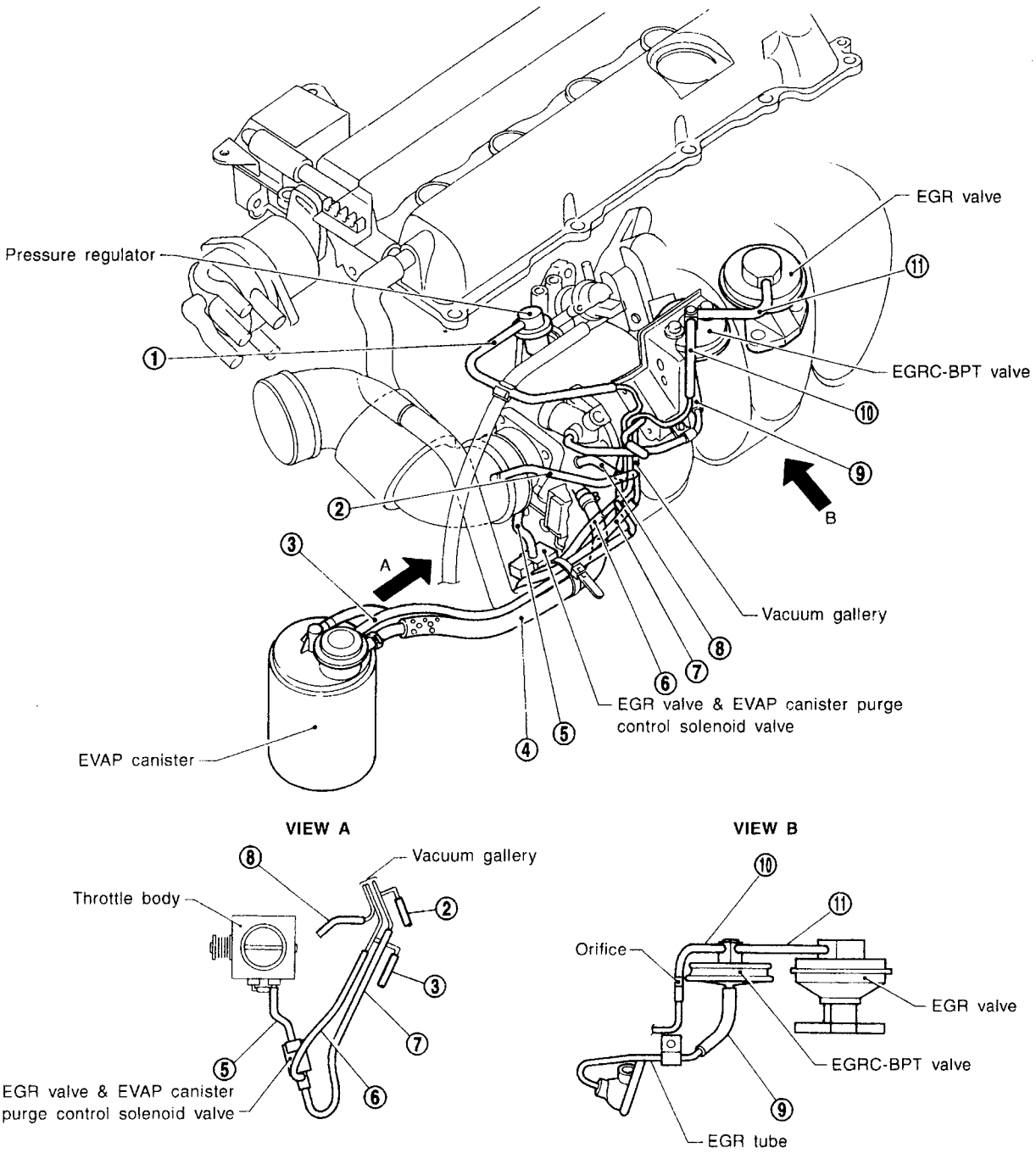

SEF309R

① Pressure regulator to vacuum gallery
② Air duct to vacuum gallery
③ EVAP canister (vacuum line) to vacuum gallery
④ EVAP canister (purge line) to intake manifold collector
⑤ Throttle body to EGR valve & EVAP canister purge control solenoid valve
⑥ EGR valve & EVAP canister purge control solenoid valve to vacuum gallery
⑦ EGR valve & EVAP canister purge control solenoid valve to vacuum gallery
⑧ Intake manifold collector to vacuum gallery
⑨ EGRC-BPT valve to EGR tube
⑩ EGRC-BPT valve to vacuum gallery
⑪ EGR valve to EGRC-BPT valve

Simpo PDF Merge and Split Unregistered Version - http://www.simpopdf.com

System Chart

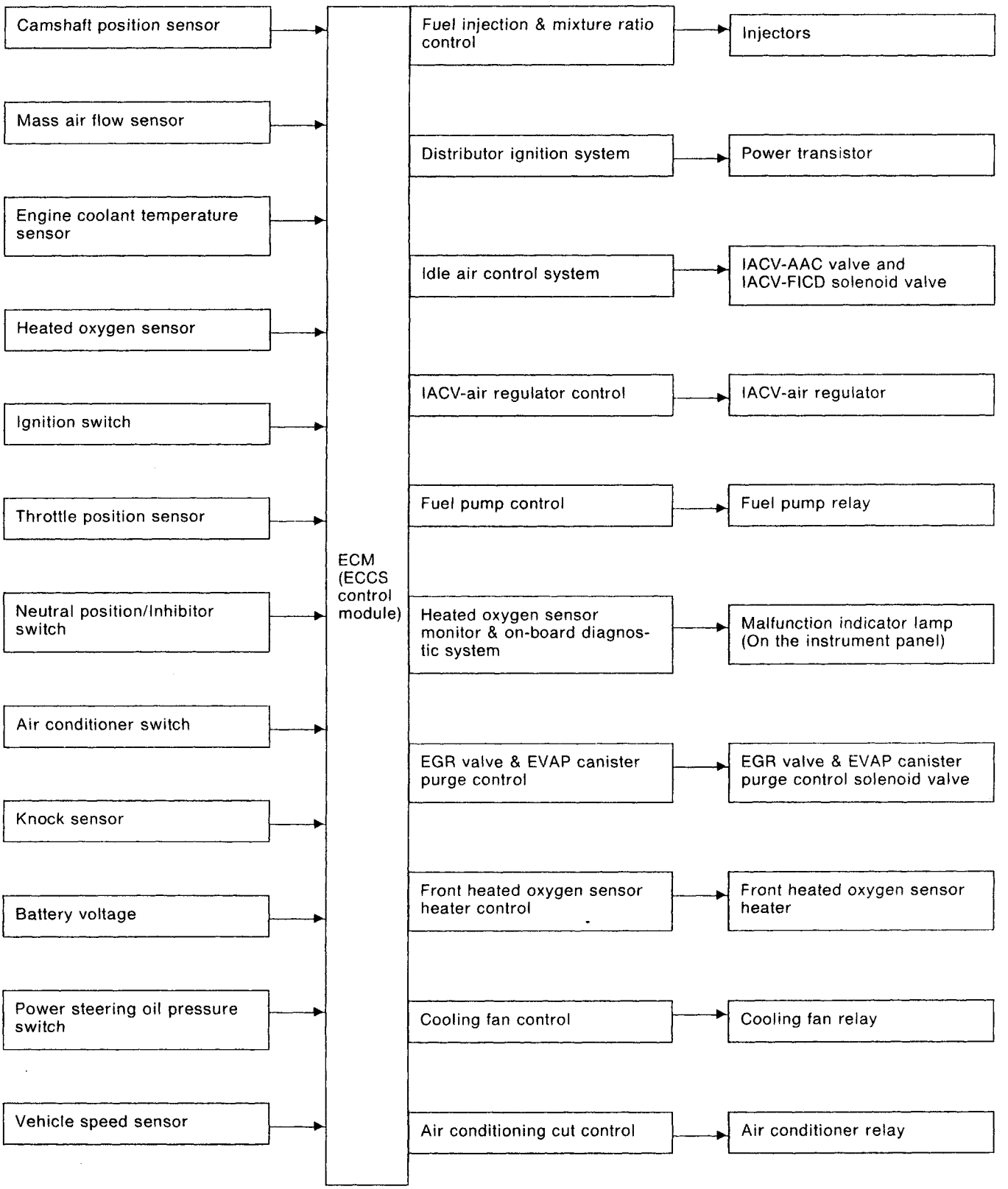

Simpo PDF Merge and Split Unregistered Version - http://www.simpopdf.com

Multiport Fuel Injection (MFI) System

INPUT/OUTPUT SIGNAL LINE

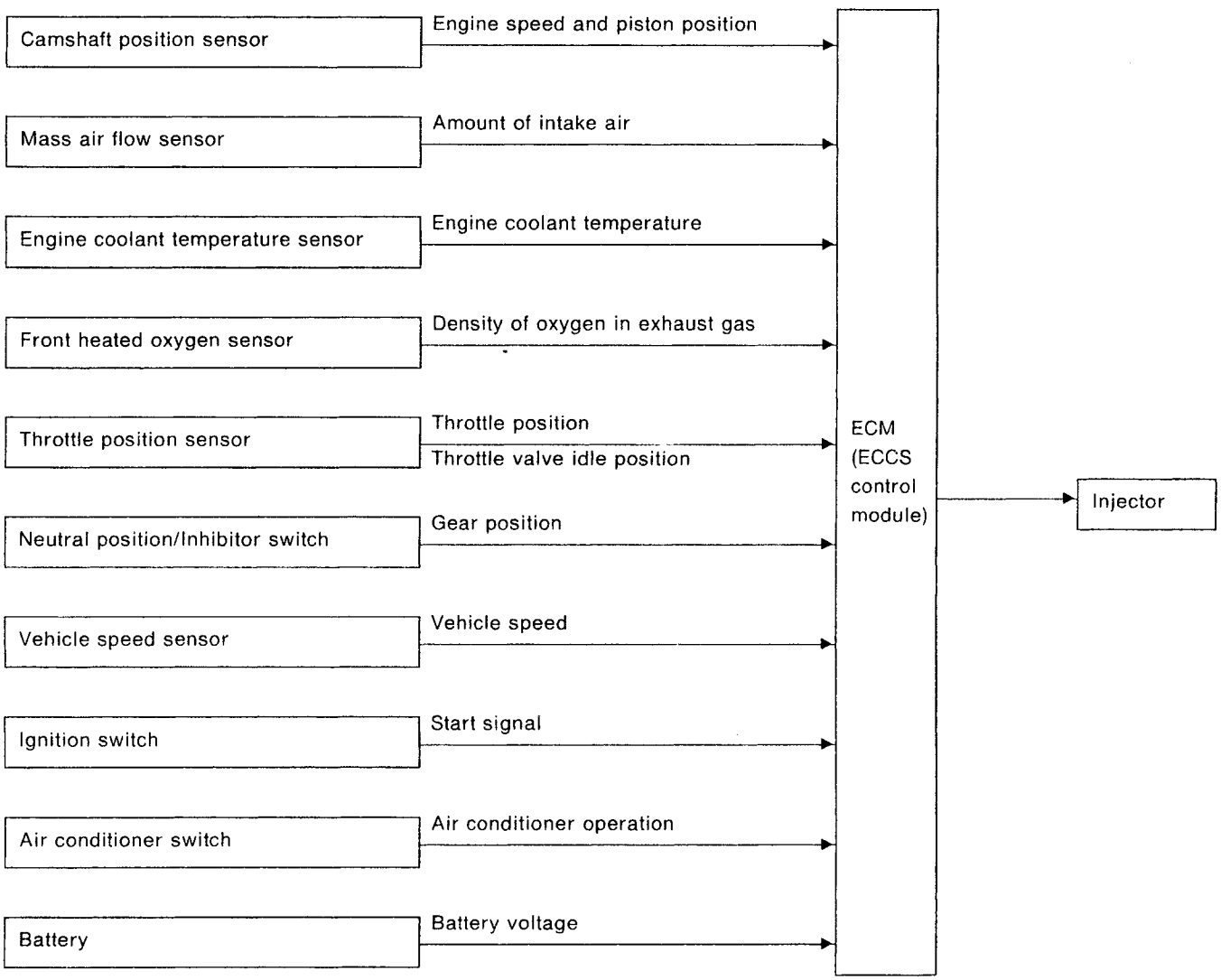

EC

BASIC MULTIPORT FUEL INJECTION SYSTEM

The amount of fuel injected from the fuel injector is determined by the ECM. The ECM controls the length of time the valve remains open (injection pulse duration). The amount of fuel injected is a program value in the ECM memory. The program value is preset by engine operating conditions. These conditions are determined by input signals (for engine speed and intake air) from both the camshaft position sensor and the mass air flow sensor.

VARIOUS FUEL INJECTION INCREASE/DECREASE COMPENSATION

In addition, the amount of fuel injected is compensated to improve engine performance under various operating conditions as listed below.

<Fuel increase>

- During warm-up
- When starting the engine
- During acceleration
- Hot-engine operation
- When selector lever is changed from "N" to "D" (A/T models only)
- High-load operation

<Fuel decrease>

- During deceleration

Simpo PDF Merge and Split Unregistered Version - http://www.simpopdf.com

Multiport Fuel Injection (MFI) System (Cont'd)

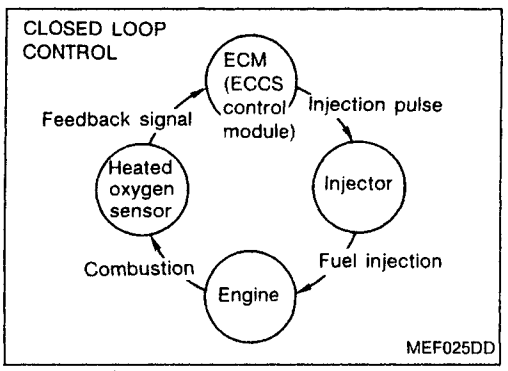

MIXTURE RATIO FEEDBACK CONTROL (CLOSED LOOP CONTROL)

The mixture ratio feedback system provides the best air-fuel mixture ratio for driveability and emission control. The three way catalyst can then better reduce CO, HC and NOx emissions. This system uses a heated oxygen sensor in the exhaust manifold to monitor if the engine operation is rich or lean. The ECM adjusts the injection pulse width according to the sensor voltage signal. For more information about the heated oxygen sensor, refer to EC-362. This maintains the mixture ratio within the range of stoichiometric (ideal air-fuel mixture).
This stage is referred to as the closed loop control condition.

OPEN LOOP CONTROL

The open loop system condition refers to when the ECM detects any of the following conditions. Feedback control stops in order to maintain stabilized fuel combustion.

- Deceleration and acceleration
- High-load, high-speed operation
- Engine idling
- Malfunction of heated oxygen sensor or its circuit
- Insufficient activation of heated oxygen sensor at low engine coolant temperature
- High-engine coolant temperature
- After shifting from "N" to "D"
- During warm-up
- When starting the engine

MIXTURE RATIO SELF-LEARNING CONTROL

The mixture ratio feedback control system monitors the mixture ratio signal transmitted from the heated oxygen sensor. This feedback signal is then sent to the ECM. The ECM controls the basic mixture ratio as close to the theoretical mixture ratio as possible. However, the basic mixture ratio is not necessarily controlled as originally designed. Both manufacturing differences (i.e., mass air flow sensor hot wire) and characteristic changes during operation (i.e., injector clogging) directly affect mixture ratio.
Accordingly, the difference between the basic and theoretical mixture ratios is monitored in this system. This is then computed in terms of "injection pulse duration" to automatically compensate for the difference between the two ratios.

Simpo PDF Merge and Split Unregistered Version - http://www.simpopdf.com

Multiport Fuel Injection (MFI) System (Cont'd)

FUEL INJECTION TIMING

Two types of systems are used.

Sequential multiport fuel injection system

Fuel is injected into each cylinder during each engine cycle according to the firing order. This system is used when the engine is running.

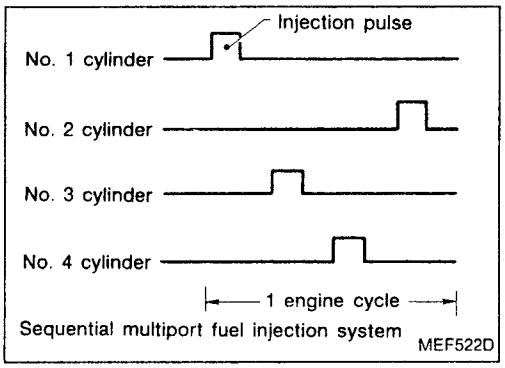

Sequential multiport fuel injection system
MEF522D

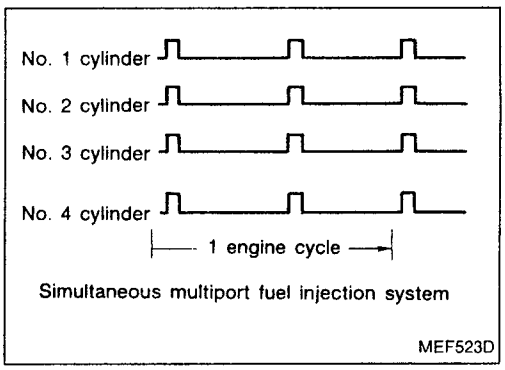

Simultaneous multiport fuel injection system
MEF523D

Simultaneous multiport fuel injection system

Fuel is injected simultaneously into all four cylinders twice each engine cycle. In other words, pulse signals of the same width are simultaneously transmitted from the ECM.
The four injectors will then receive the signals two times for each engine cycle.
This system is used when the engine is being started and/or if the fail-safe system (CPU) is operating.

EC

FUEL SHUT-OFF

Fuel to each cylinder is cut off during deceleration or operation of the engine at excessively high speeds.

Distributor Ignition (DI) System

INPUT/OUTPUT SIGNAL LINE

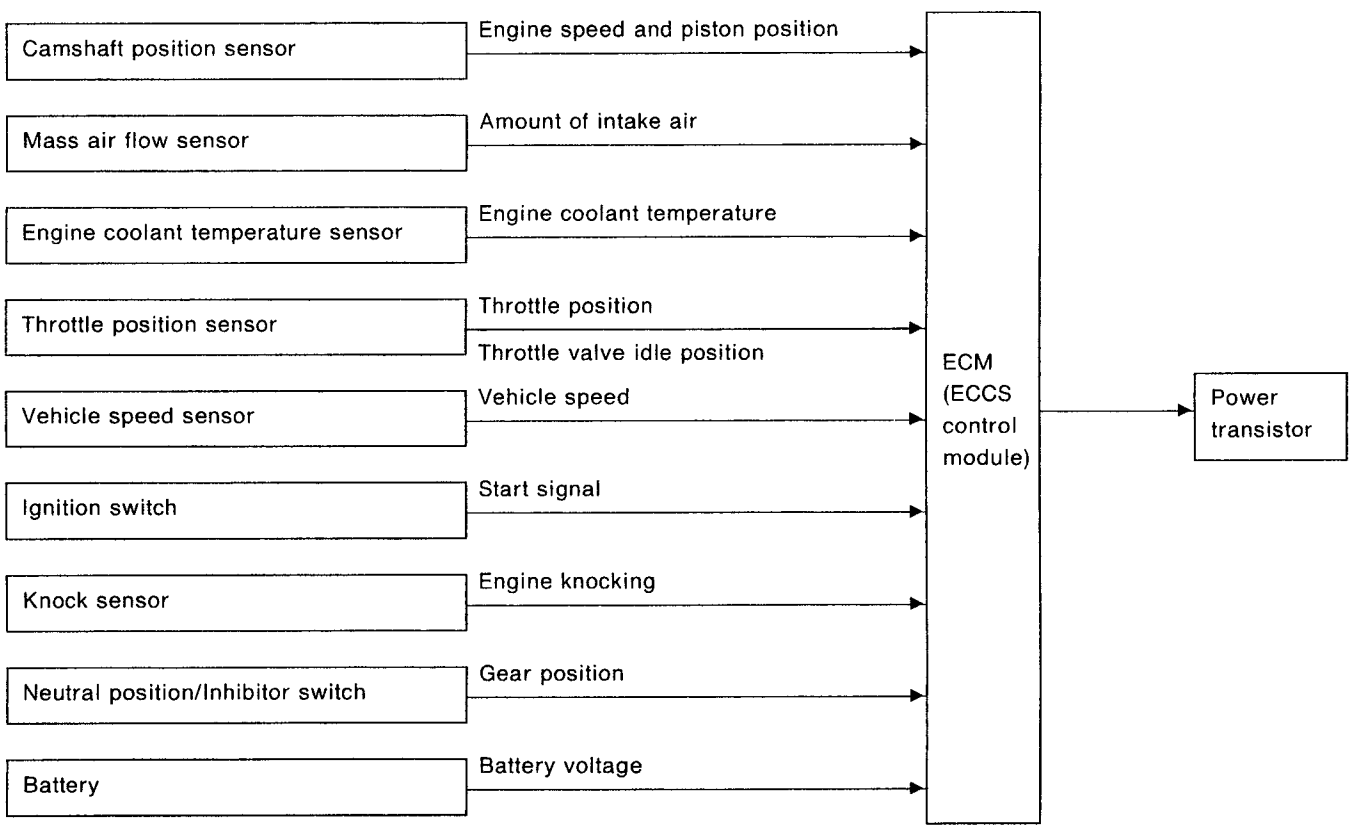

Simpo PDF Merge and Split Unregistered Version - http://www.simpopdf.com

Distributor Ignition (DI) System (Cont'd)

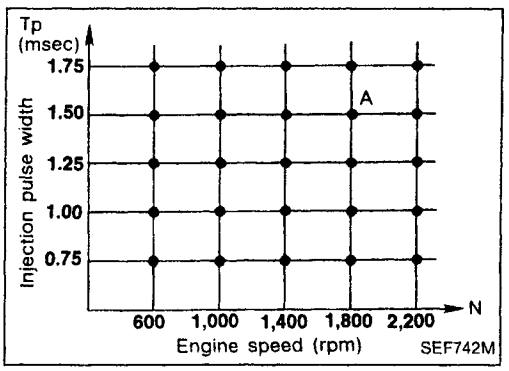

SYSTEM DESCRIPTION

The ignition timing is controlled by the ECM to maintain the best air-fuel ratio for every running condition of the engine.
The ignition timing data is stored in the ECM. This data forms the map shown.
The ECM receives information such as the injection pulse width and camshaft position sensor signal. Computing this information, ignition signals are transmitted to the power transistor.

e.g., N: 1,800 rpm, Tp: 1.50 msec
A °BTDC

During the following conditions, the ignition timing is revised by the ECM according to the other data stored in the ECM.

- At starting
- During warm-up
- At idle
- Hot engine operation
- During acceleration

The knock sensor retard system is designed only for emergencies. The basic ignition timing is programmed within the anti-knocking zone, if recommended fuel is used under dry conditions. The retard system does not operate under normal driving conditions.
If engine knocking occurs, the knock sensor monitors the condition. The signal is transmitted to the ECM (ECCS control module). The ECM retards the ignition timing to eliminate the knocking condition.

Air Conditioning Cut Control

INPUT/OUTPUT SIGNAL LINE

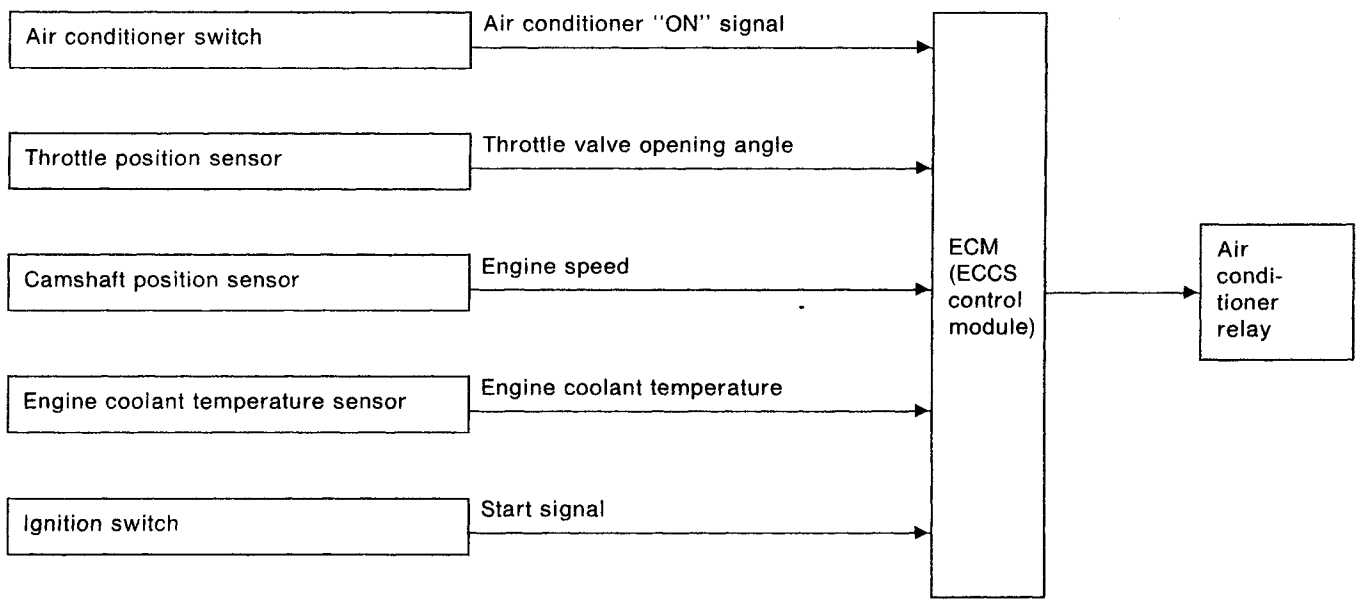

SYSTEM DESCRIPTION

This system improves acceleration when the air conditioner is used.
When the accelerator pedal is fully depressed, the air conditioner is turned off for a few seconds.
When engine coolant temperature becomes excessively high, the air conditioner is turned off. This continues until the coolant temperature returns to normal.

Simpo PDF Merge and Split Unregistered Version - http://www.simpopdf.com

Fuel Cut Control (at no load & high engine speed)

INPUT/OUTPUT SIGNAL LINE

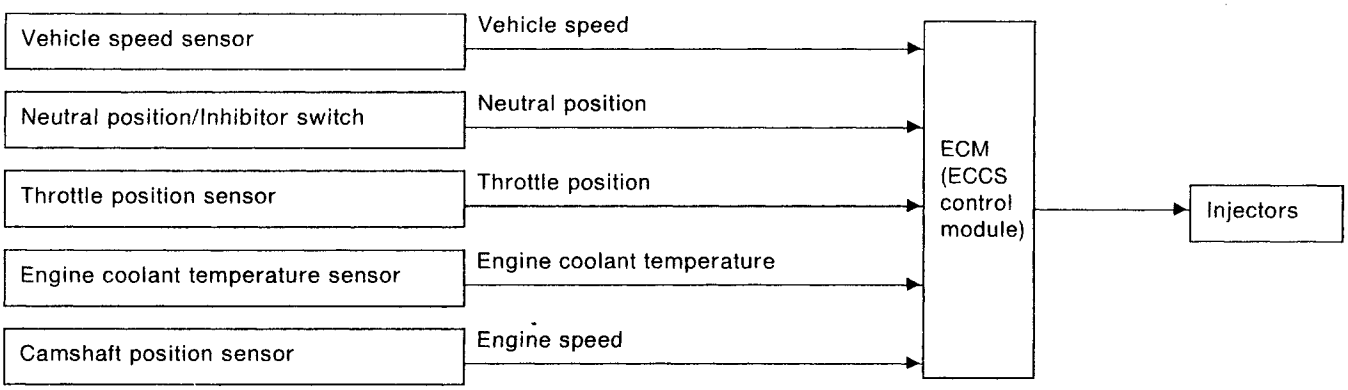

If the engine speed is above 3,950 rpm with no load (for example, in neutral and engine speed over 3,950 rpm) fuel will be cut off after some time. The exact time when the fuel is cut off varies based on engine speed.
Fuel cut will operate until the engine speed reaches 1,150 rpm, then fuel cut is cancelled.

NOTE:
This function is different than deceleration control listed under "Multiport Fuel Injection (MFI) System" on EC-233.

EC

Simpo PDF Merge and Split Unregistered Version - http://www.simpopdf.com

Description

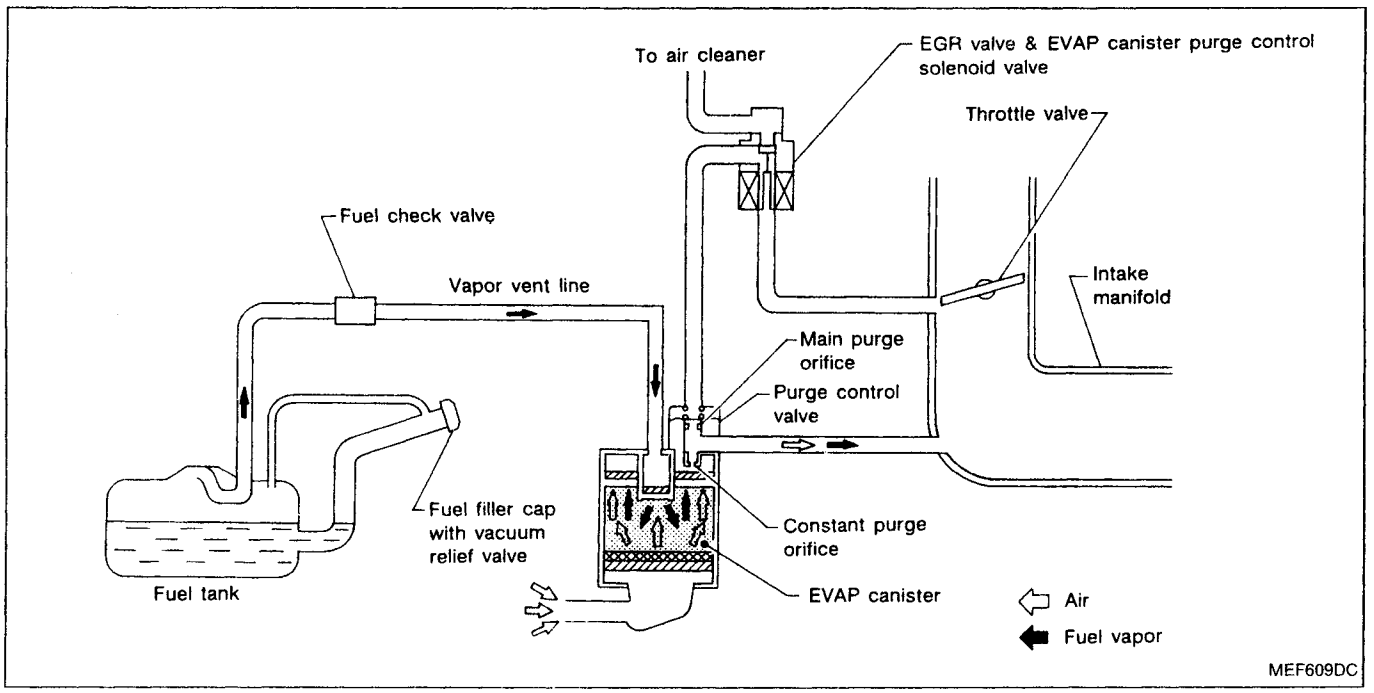

The evaporative emission system is used to reduce hydrocarbons emitted into the atmosphere from the fuel system. This reduction of hydrocarbons is accomplished by activated charcoals in the EVAP canister.
The fuel vapor from sealed fuel tank is led into the EVAP canister when the engine is off. The fuel vapor is then stored in the EVAP canister. The EVAP canister retains the fuel vapor until the EVAP canister is purged by air.
When the engine is running, the air is drawn through the bottom of the EVAP canister. The fuel vapor will then be led to the intake manifold.
When the engine runs at idle, the purge control valve is closed. Only a small amount of vapor flows into the intake manifold through the constant purge orifice.
As the engine speed increases and the throttle vacuum rises, the purge control valve opens. The vapor is sucked through both main purge and constant purge orifices.

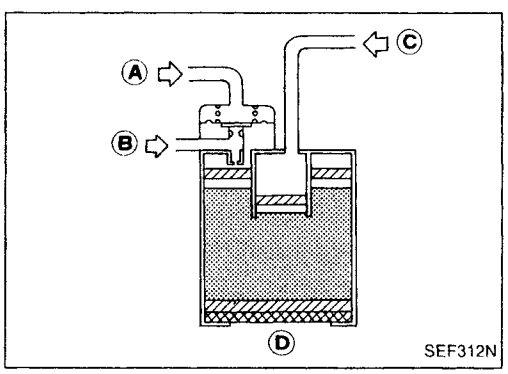

Inspection

EVAP CANISTER

Check EVAP canister as follows:
1. Blow air in port Ⓐ and ensure that there is no leakage.
2.
- Apply vacuum to port Ⓐ. [Approximately –13.3 to –20.0 kPa (–133 to –200 mbar, –100 to –150 mmHg, –3.94 to –5.91 inHg)]
- Cover port Ⓓ with hand.
- Blow air in port Ⓒ and ensure free flow out of port Ⓑ.

Simpo PDF Merge and Split Unregistered Version - http://www.simpopdf.com

Inspection (Cont'd)

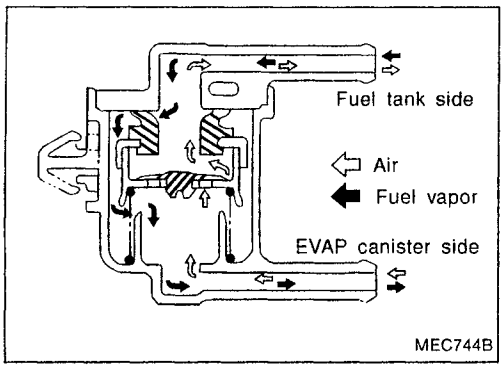

FUEL CHECK VALVE

Check valve operation

1. Blow air through connector on fuel tank side.
   A considerable resistance should be felt and a portion of air flow should be directed toward the EVAP canister side.
2. Blow air through connector on EVAP canister side.
   Air flow should be smoothly directed toward fuel tank side.
3. If fuel check valve is suspected of not properly functioning in steps 1 and 2 above, replace it.

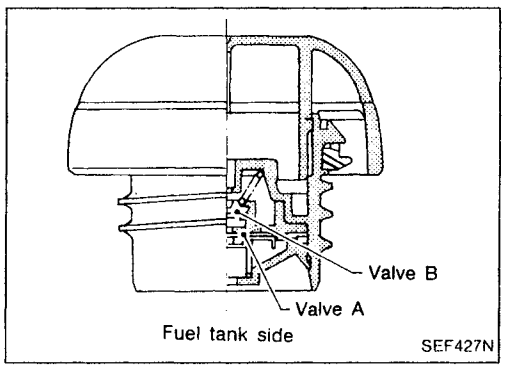

FUEL TANK VACUUM RELIEF VALVE

1. Wipe clean valve housing.
2. Suck air through the cap. A slight resistance accompanied by valve clicks indicates that valve A is in good mechanical condition. Note also that, by further sucking air, the resistance should disappear with valve clicks.
3. Blow air on fuel tank side and ensure that continuity of air passage exists through valve B.
4. If valve is clogged or if no resistance is felt, replace cap as an assembly.

EC

Simpo PDF Merge and Split Unregistered Version - http://www.simpopdf.com

Description

This system returns blow-by gas to the intake manifold collector.
The positive crankcase ventilation (PCV) valve is provided to conduct crankcase blow-by gas to the intake manifold.
During partial throttle operation of the engine, the intake manifold sucks the blow-by gas through the PCV valve.
Normally, the capacity of the valve is sufficient to handle any blow-by and a small amount of ventilating air.
The ventilating air is then drawn from the air duct into the crankcase. In this process the air passes through the hose connecting air inlet tubes to rocker cover.
Under full-throttle condition, the manifold vacuum is insufficient to draw the blow-by flow through the valve. The flow goes through the hose connection in the reverse direction.
On vehicles with an excessively high blow-by, the valve does not meet the requirement. This is because some of the flow will go through the hose connection to the intake manifold collector under all conditions.

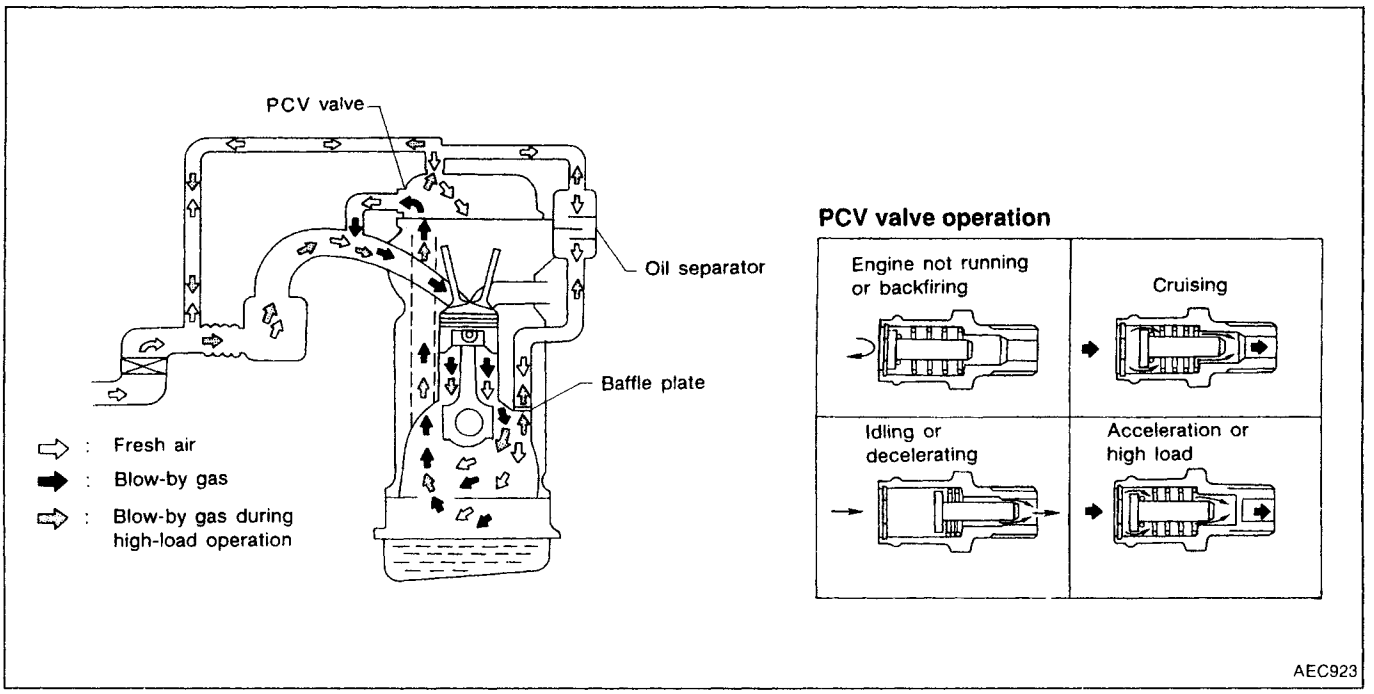

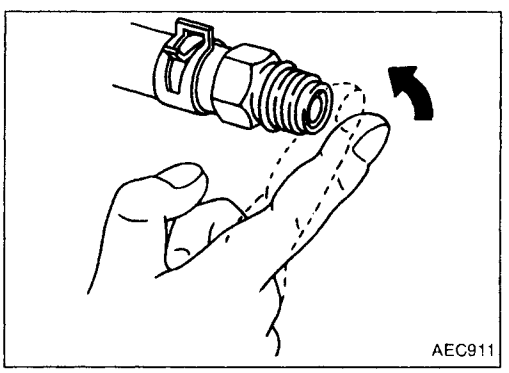

Inspection

PCV (Positive Crankcase Ventilation)

With engine running at idle, remove PCV valve from rocker cover. A properly working valve makes a hissing noise as air passes through it. A strong vacuum should be felt immediately when a finger is placed over the valve inlet.

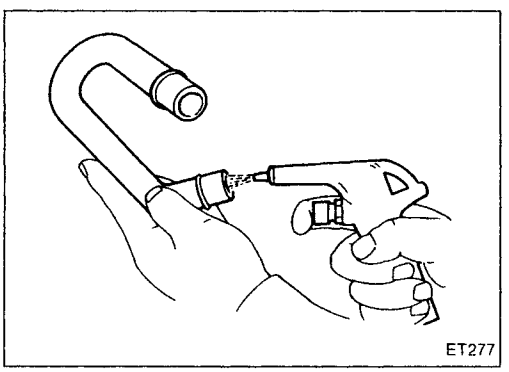

VENTILATION HOSE

1. Check hoses and hose connections for leaks.
2. Disconnect all hoses and clean with compressed air. If any hose cannot be freed of obstructions, replace.

Simpo PDF Merge and Split Unregistered Version - http://www.simpopdf.com

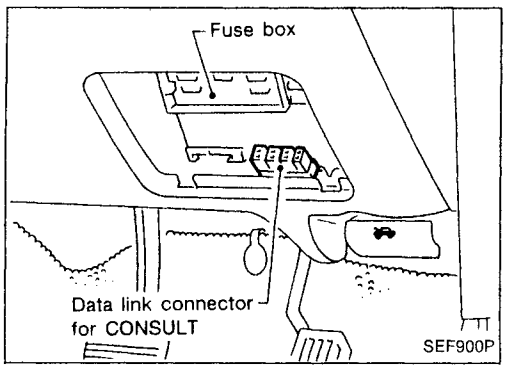

Fuel Pressure Release

Before disconnecting fuel line, release fuel pressure from fuel line to eliminate danger.

1. Turn ignition switch "ON".
2. Perform "FUEL PRESSURE RELEASE" in "WORK SUPPORT" mode with CONSULT.
3. Start engine.
4. After engine stalls, crank it two or three times to release all fuel pressure.
5. Turn ignition switch "OFF".

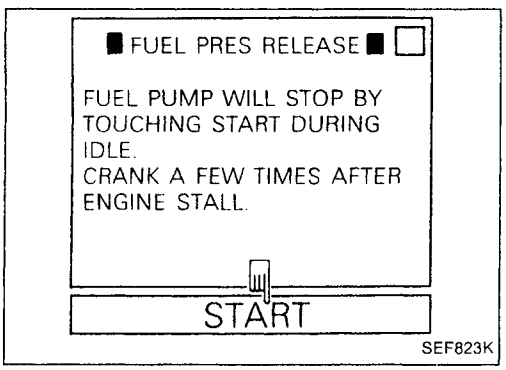

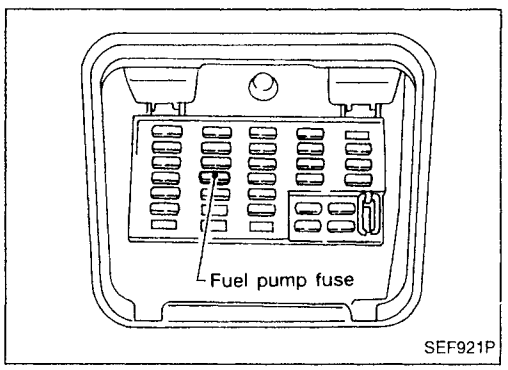

1. Remove fuse for fuel pump.
2. Start engine.
3. After engine stalls, crank it two or three times to release all fuel pressure.
4. Turn ignition switch off and reconnect fuel pump fuse.

Fuel Pressure Check

- **When reconnecting fuel line, always use new clamps.**
- **Make sure that clamp screw does not contact adjacent parts.**
- **Use a torque driver to tighten clamps.**
- **Use Pressure Gauge to check fuel pressure.**
- **Do not perform fuel pressure check with system operating. Fuel pressure gauge may indicate false readings.**

1. Release fuel pressure to zero.
2. Disconnect fuel hose between fuel filter and fuel tube (engine side).
3. Install pressure gauge between fuel filter and fuel tube.
4. Start engine and check for fuel leakage.
5. Read the indication of fuel pressure gauge.

At idling:

With vacuum hose connected

Approximately 235 kPa (2.35 bar, 2.4 kg/cm^2, 34 psi)

With vacuum hose disconnected

Approximately 294 kPa (2.94 bar, 3.0 kg/cm^2, 43 psi)

If results are unsatisfactory, perform Fuel Pressure Regulator Check.

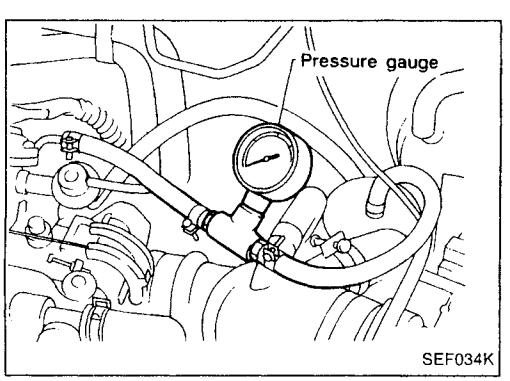

Simpo PDF Merge and Split Unregistered Version - http://www.simpopdf.com

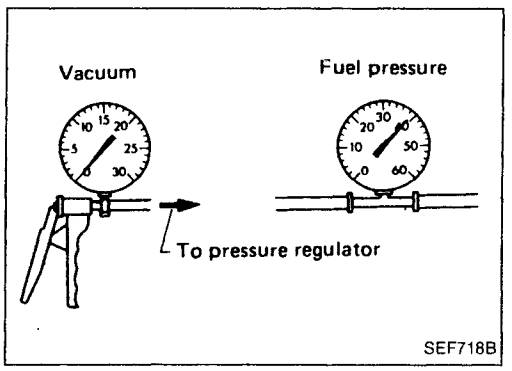

Fuel Pressure Regulator Check

1. Stop engine and disconnect fuel pressure regulator vacuum hose from intake manifold.
2. Plug intake manifold with a rubber cap.
3. Connect variable vacuum source to fuel pressure regulator.
4. Start engine and read indication of fuel pressure gauge as vacuum is changed.

Fuel pressure should decrease as vacuum increases. If results are unsatisfactory, replace fuel pressure regulator.

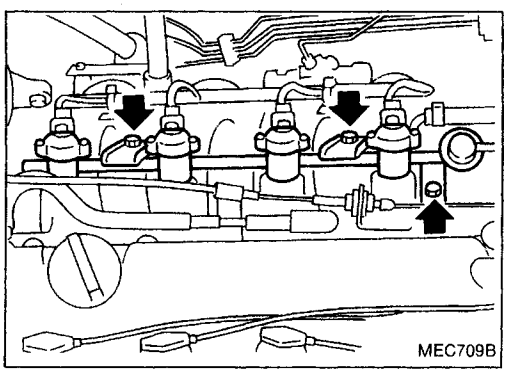

Injector Removal and Installation

1. Release fuel pressure to zero.
2. Disconnect vacuum hose from pressure regulator.
3. Disconnect fuel hoses from fuel tube assembly.
4. Disconnect injector harness connectors.
5. Remove injectors with fuel tube assembly.

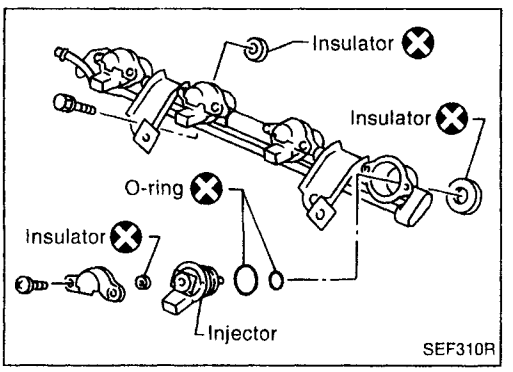

- Push injector tail piece.
- Do not pull on the connector.

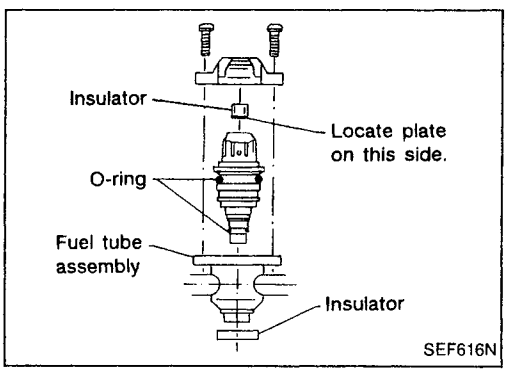

6. Install injectors.
- Clean exterior of injector tail piece.
- Use new O-rings.

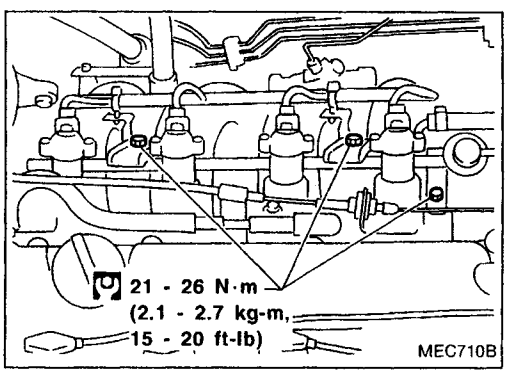

7. Install injectors with fuel tube assembly to intake manifold.
8. Install fuel hoses to fuel tube assembly.
9. Reinstall any parts removed in reverse order of removal.

CAUTION:
After properly connecting fuel hose to injector and fuel tube assembly, check connection for fuel leakage.

Simpo PDF Merge and Split Unregistered Version - http://www.simpopdf.com

Idle Speed/Ignition Timing/Idle Mixture Ratio Adjustment

PREPARATION

- Make sure that the following parts are in good order.

(1) Battery
(2) Ignition system
(3) Engine oil and coolant levels
(4) Fuses
(5) ECM harness connector
(6) Vacuum hoses
(7) Air intake system
(Oil filler cap, oil level gauge, etc.)
(8) Fuel pressure
(9) Engine compression
(10) Throttle valve

- On models equipped with air conditioner, checks should be carried out while the air conditioner is "OFF".
- On models equipped with automatic transaxle, when checking idle speed, ignition timing and mixture ratio, checks should be carried out while shift lever is in "N" position.
- When measuring "CO" percentage, insert probe more than 40 cm (15.7 in) into tail pipe.
- Turn off headlamps, heater blower, rear defogger.
- Keep front wheels pointed straight ahead.
- Make the check after the cooling fan has stopped.

EC

Overall inspection sequence

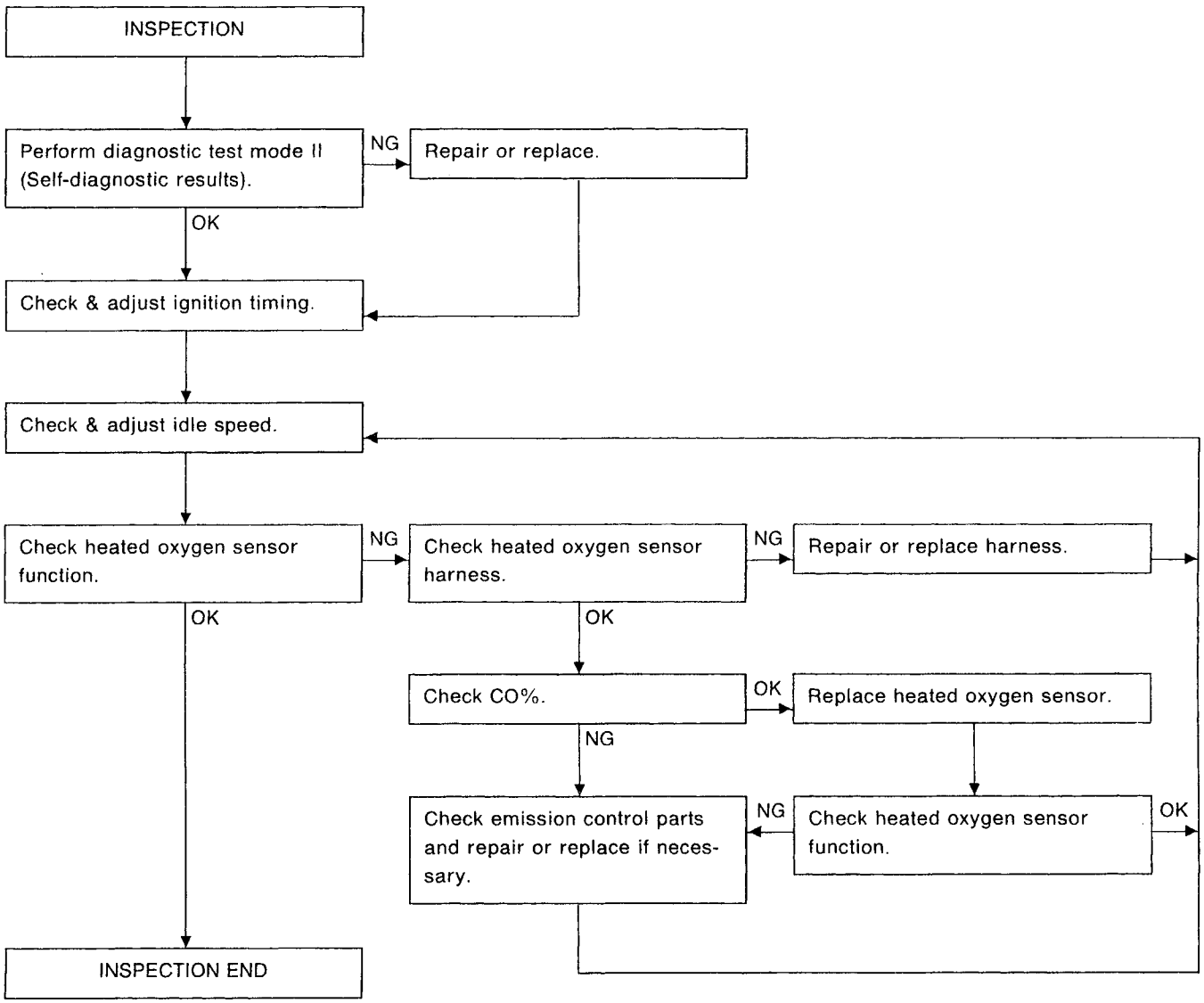

Simpo PDF Merge and Split Unregistered Version - http://www.simpopdf.com

Idle Speed/Ignition Timing/Idle Mixture Ratio Adjustment (Cont'd)

A

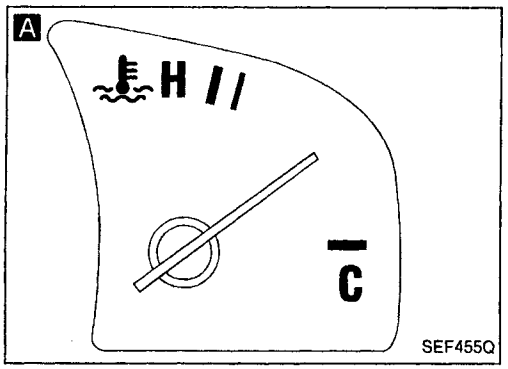

SEF455Q

B

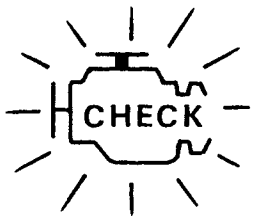

Malfunction indicator lamp

SEF051PA

C

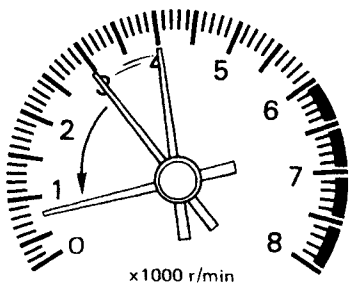

SEF248F

D

■ IGN TIMING ADJ ■ □

IGNITION TIMING FEEDBACK CONTROL WILL BE HELD BY TOUCHING START.
AFTER DOING SO, ADJUST IGNITION TIMING WITH A TIMING LIGHT BY TURNING THE CAMSHAFT POSITION SENSOR.

START

SEF546N

E

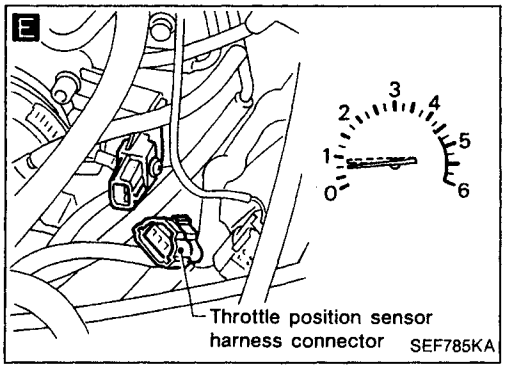

Throttle position sensor harness connector SEF785KA

START

Visually check the following:
- Air cleaner clogging
- Hoses and duct for leaks
- Electrical connectors
- Gasket (intake manifold, cylinder head, exhaust system)
- Throttle valve and throttle position sensor operation

A

Start engine and warm it up until engine coolant temperature indicator points to the middle of gauge.
Ensure engine speed stays below 1,000 rpm.

Open engine hood and run engine at about 2,000 rpm for about 2 minutes under no-load.

B

Perform the Diagnostic Test Mode II (Self-diagnostic results).

OK

NG

Repair or replace components as necessary.

C

Run engine at about 2,000 rpm for about 2 minutes under no-load.
Rev engine two or three times under no-load, then run engine at idle speed for about 1 minute.

D E

1. Select "IGNITION TIMING ADJ" in WORK SUPPORT mode.
2. Touch "START".

OR

1. Turn off engine and disconnect throttle position sensor harness connector.
2. Start engine.

Rev engine (2,000 - 3,000 rpm) 2 or 3 times under no-load, then run engine at idle speed.

Ⓐ

Simpo PDF Merge and Split Unregistered Version - http://www.simpopdf.com

Idle Speed/Ignition Timing/Idle Mixture Ratio Adjustment (Cont'd)

F

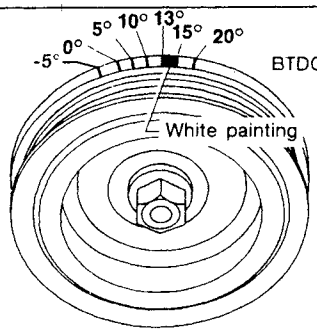

G

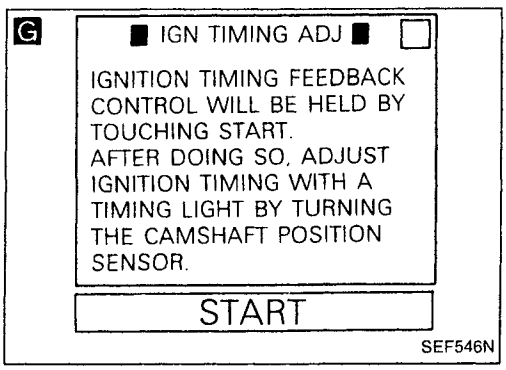

H

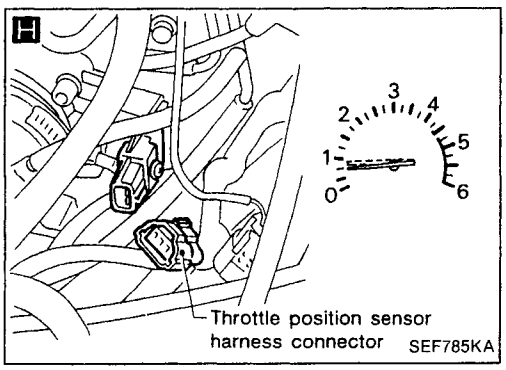

I

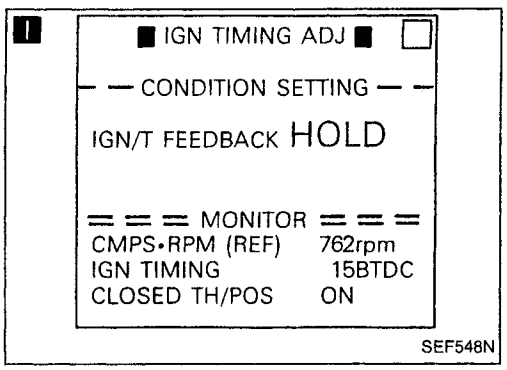

J

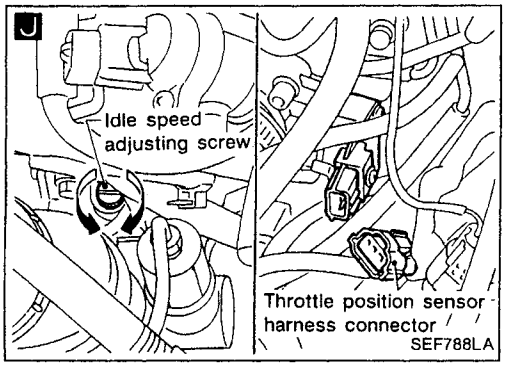

Ⓐ

F

Check ignition timing with a timing light.

M/T: 15° ± 2° BTDC
A/T: 15° ± 2° BTDC (in "N" position)

NG

Adjust ignition timing to the specified value by turning distributor after loosening bolts which secure distributor.

M/T: 15° ± 2° BTDC
A/T: 15° ± 2° BTDC (in "N" position)

Ⓑ

G **H**

1. Select "IGN TIMING ADJ" in "WORK SUPPORT" mode.
2. Touch "START".

OR

1. Stop engine and disconnect throttle position sensor harness connector.
2. Start engine.

I

Check idle speed.

Read idle speed in "IGN TIMING ADJ" in "WORK SUPPORT" mode.

OR

Check idle speed.

M/T: 750 ± 50 rpm
A/T: 750 ± 50 rpm (in "N" position)

OK

NG

Rev engine (2,000 - 3,000 rpm) 2 or 3 times under no-load, then run engine at idle speed.

J

Adjust idle speed by turning idle speed adjusting screw.

M/T: 750 ± 50 rpm
A/T: 750 ± 50 rpm (in "N" position)

K

Touch "BACK".

OR

1. Turn off engine and connect throttle position sensor harness connector.
2. Start engine.

Rev engine (2,000 - 3,000 rpm) 2 or 3 times under no-load, then run engine at idle speed.

Ⓒ

EC

Simpo PDF Merge and Split Unregistered Version - http://www.simpopdf.com

Idle Speed/Ignition Timing/Idle Mixture Ratio Adjustment (Cont'd)

K

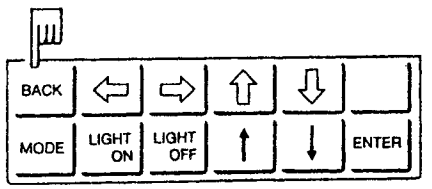

SEF913J

L

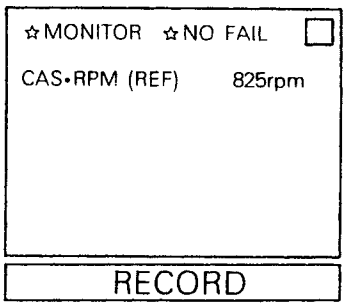

SEF135K

M

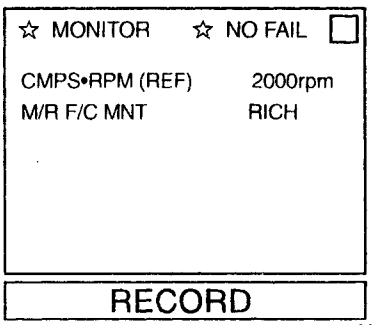

MEC711B

N

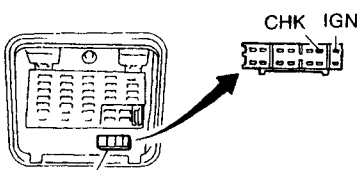

Data link connector for CONSULT (Connect CHK and IGN terminals with a suitable harness.)

SEF909P

O

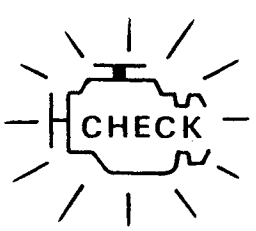

SEF051P

Ⓒ

L

Check idle speed.

Read idle speed in "DATA MONITOR" mode with CONSULT.

OR

Check idle speed.

M/T: 800 ± 50 rpm
A/T: 800 ± 50 rpm (in "N" position)

OK

NG

Check IACV-AAC valve and replace if necessary.

Check IACV-AAC valve harness and repair if necessary.

Check ECM function* by substituting another known good ECM.

* ECM may be the cause of a problem, but this is rarely the case.

M N O

1. See "M/R F/C MNT" in "DATA MONITOR" mode.
2. Run engine at about 2,000 rpm for about 2 minutes under no-load.
3. Maintain engine at 2,000 rpm under no-load (engine is warmed up sufficiently). Check that the monitor fluctuates between "LEAN" and "RICH" more than 5 times during 10 seconds.
   1 cycle: RICH → LEAN → RICH
   2 cycles: RICH → LEAN → RICH → LEAN → RICH

OR

1. Set "Heated oxygen sensor monitor" in the Diagnostic Test Mode II. (See page EC-252.)
2. Run engine at about 2,000 rpm for about 2 minutes under no-load.
3. Maintain engine at 2,000 rpm under no-load. Check that the malfunction indicator lamp goes on and off more than 5 times during 10 seconds.

NG → Ⓓ

OK

END

Simpo PDF Merge and Split Unregistered Version - http://www.simpopdf.com

Idle Speed/Ignition Timing/Idle Mixture Ratio Adjustment (Cont'd)

P

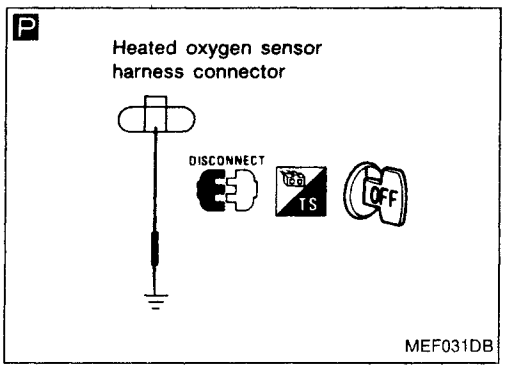

Q

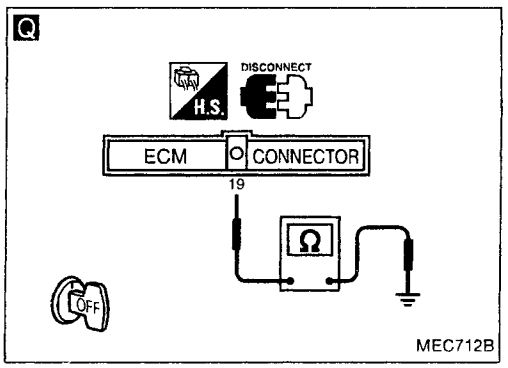

R

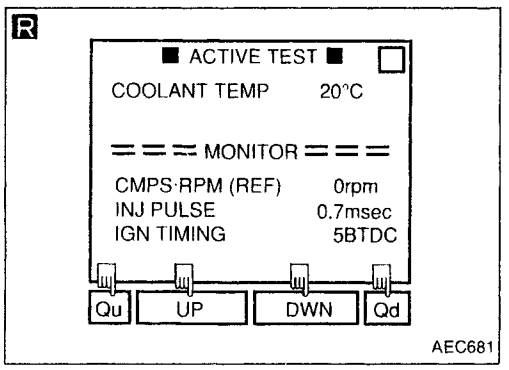

S

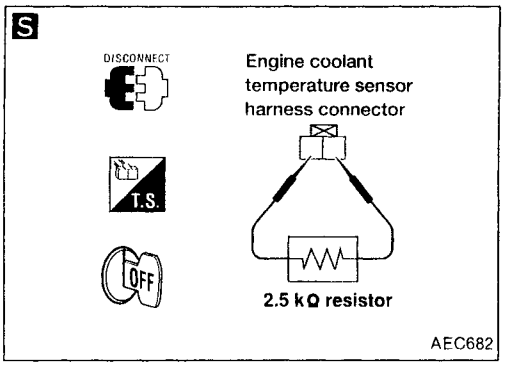

T

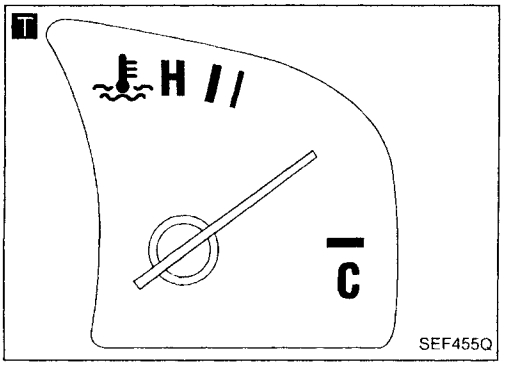

Ⓓ

P Q

Check heated oxygen sensor harness:
1. Turn off engine and disconnect battery ground cable.
2. Disconnect ECM harness connector from ECM.
3. Disconnect heated oxygen sensor harness connector. Then connect harness side terminal for heated oxygen sensor to ground with a jumper wire.
4. Check for continuity between terminal ⑲ of ECM harness connector and body ground.

Continuity exists ..... **OK**
Continuity does not exist ..... **NG**

OK

NG → Repair or replace harness. → Ⓑ

Connect ECM harness connector to ECM.

R S

1. Connect battery ground cable.
2. Select "ENG COOLANT TEMP" in "ACTIVE TEST" mode.
3. Set "COOLANT TEMP" to 20°C (68°F) by touching "Qu" and "Qd" and "UP", "DWN".

OR

1. Disconnect engine coolant temperature sensor harness connector.
2. Connect a resistor (2.5 kΩ) between terminals of engine coolant temperature sensor harness connector.
3. Connect battery ground cable.

T

Start engine and warm it up until engine coolant temperature indicator points to middle of gauge. (Be sure to start engine after setting "COOLANT TEMP" or installing a 2.5 kΩ resistor.)

Ⓔ

Simpo PDF Merge and Split Unregistered Version - http://www.simpopdf.com

Idle Speed/Ignition Timing/Idle Mixture Ratio Adjustment (Cont'd)

U

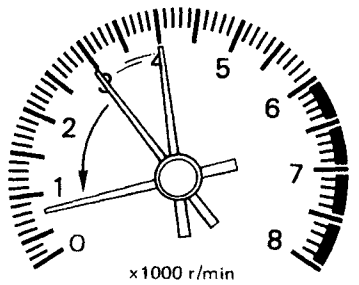

SEF248F

V

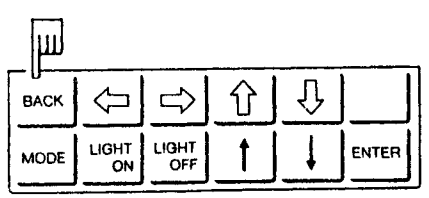

SEF913J

W

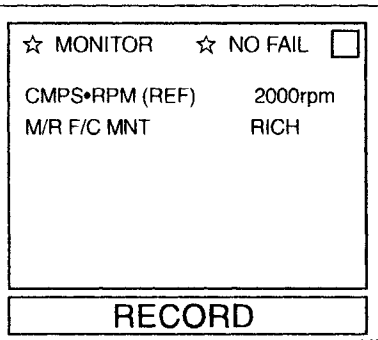

MEC711B

X

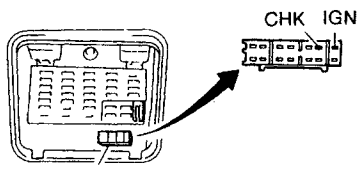

Data link connector for CONSULT (Connect CHK and IGN terminals with a suitable harness.)

SEF909P

Y

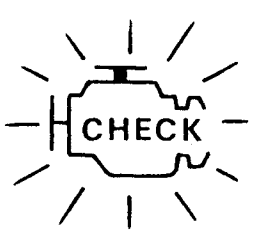

SEF051P

(E)

U

Rev engine two or three times under no-load, then run engine at idle speed.

V

Check "CO"%.

Idle CO: Less than 10% and engine runs smoothly.

After checking CO%,

1. Touch "BACK".

OR

1. Disconnect the resistor from terminals of engine coolant temperature sensor harness connector.
2. Connect engine coolant temperature sensor harness connector to engine coolant temperature sensor.

NG

OK

Replace heated oxygen sensor.

W X Y

1. See "M/R F/C MNT" in "Data monitor" mode.
2. Maintain engine at 2,000 rpm under no-load (engine is warmed up sufficiently.). Check that the monitor fluctuates between "LEAN" and "RICH" more than 5 times during 10 seconds.
   1 cycle: RICH → LEAN → RICH
   2 cycles: RICH → LEAN → RICH → LEAN → RICH

OR

1. Set "Heated oxygen sensor monitor" in the Diagnostic Test Mode II. (Refer to EC-253.)
2. Maintain engine at 2,000 rpm under no-load. Check that the malfunction indicator lamp goes ON and OFF more than 5 times during 10 seconds.

NG

OK

(F)

(B)

Simpo PDF Merge and Split Unregistered Version - http://www.simpopdf.com

Idle Speed/Ignition Timing/Idle Mixture Ratio Adjustment (Cont'd)

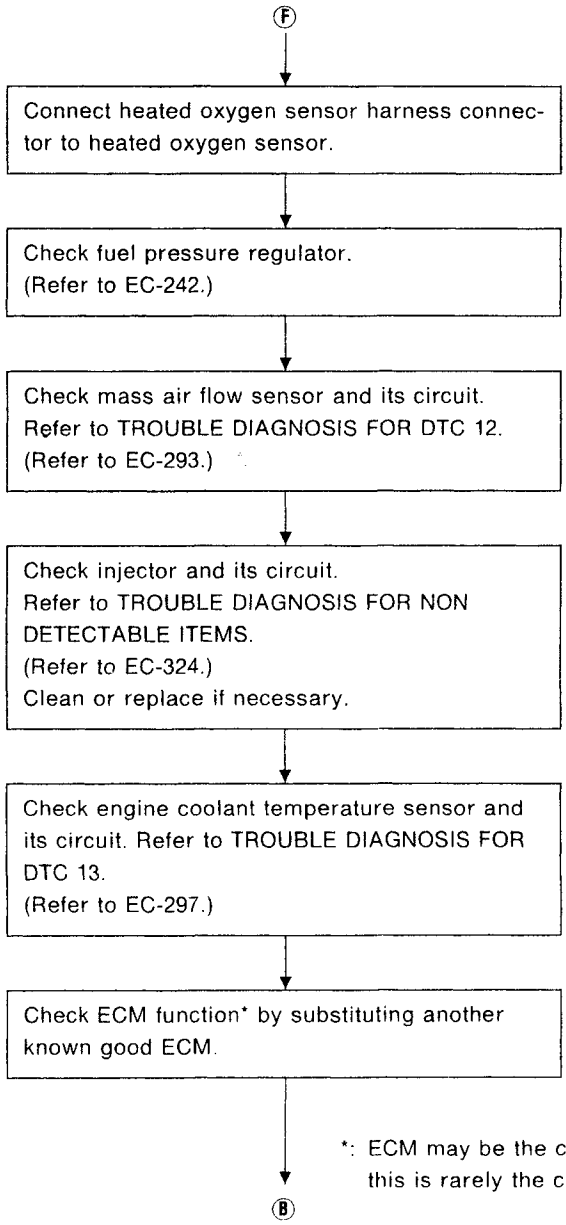

*: ECM may be the cause of a problem, but this is rarely the case.

EC

Simpo PDF Merge and Split Unregistered Version - http://www.simpopdf.com

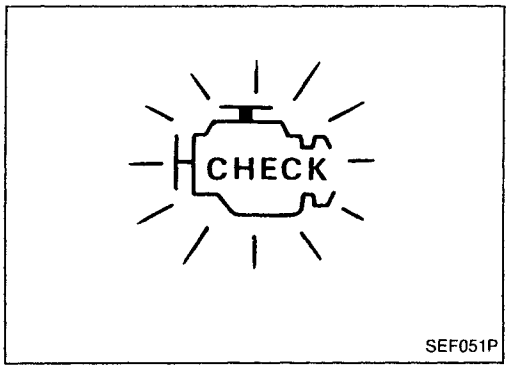

Malfunction Indicator Lamp (MIL)

1. The malfunction indicator lamp will light up when the ignition switch is turned ON without the engine running. This is a bulb check.
- If the malfunction indicator lamp does not light up, refer to EL section ("WARNING LAMPS AND CHIME") or see EC-370.
2. When the engine is started, the malfunction indicator lamp should go off.

Condition		Diagnostic Test Mode I	Diagnostic Test Mode II
Ignition switch in "ON" position	Engine stopped	BULB CHECK	SELF-DIAGNOSTIC RESULTS
	Engine running	MALFUNCTION WARNING	HEATED OXYGEN SENSOR MONITOR

Simpo PDF Merge and Split Unregistered Version - http://www.simpopdf.com

Malfunction Indicator Lamp (MIL) (Cont'd)

HOW TO SWITCH DIAGNOSTIC TEST MODES

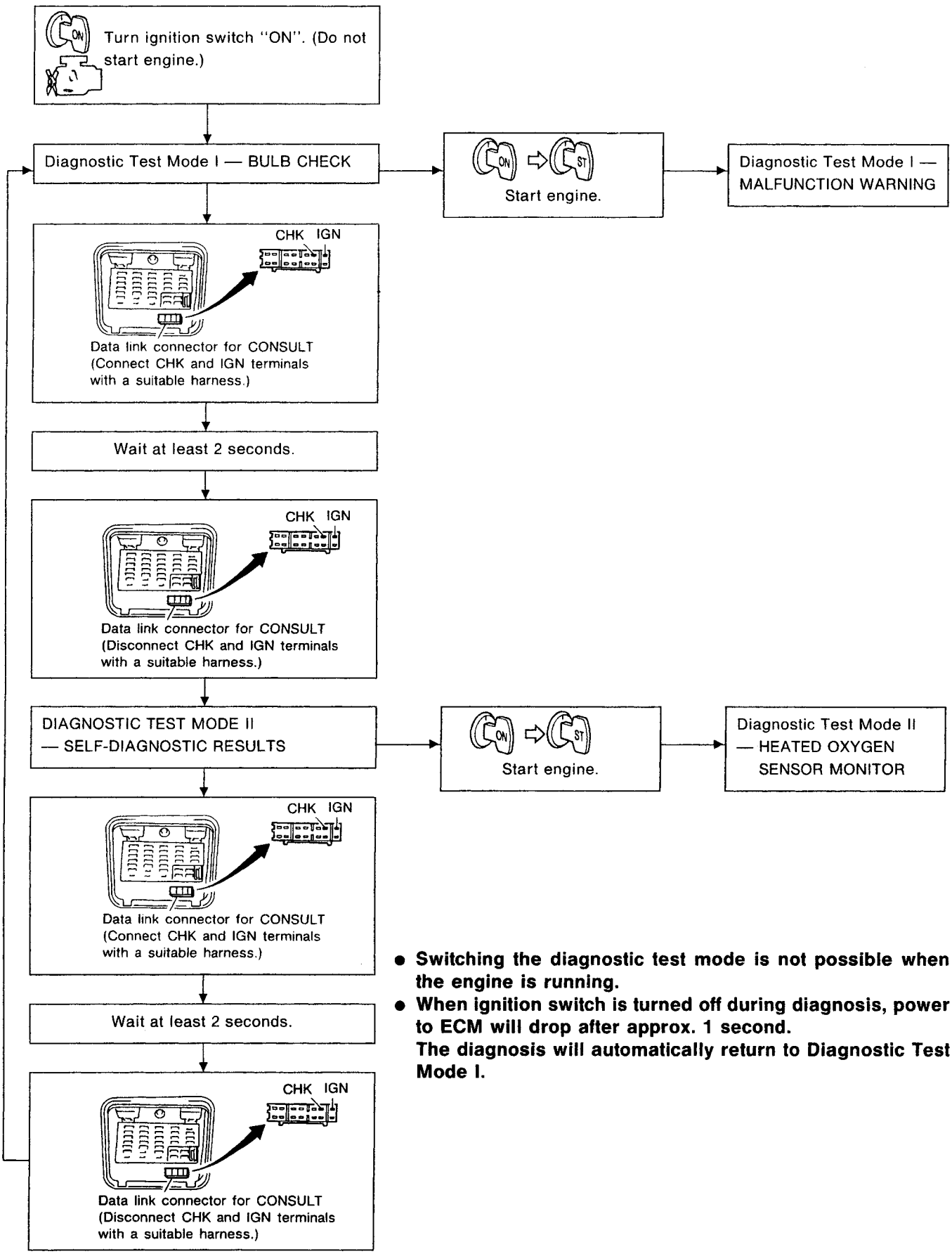

- **Switching the diagnostic test mode is not possible when the engine is running.**
- **When ignition switch is turned off during diagnosis, power to ECM will drop after approx. 1 second. The diagnosis will automatically return to Diagnostic Test Mode I.**

Simpo PDF Merge and Split Unregistered Version - http://www.simpopdf.com

Malfunction Indicator Lamp (MIL) (Cont'd)

DIAGNOSTIC TEST MODE I—BULB CHECK

In this mode, the MALFUNCTION INDICATOR LAMP on the instrument panel should stay ON. If it remains OFF, check the bulb. Refer to EL section ("WARNING LAMPS AND CHIME") or see EC-370.

DIAGNOSTIC TEST MODE I—MALFUNCTION WARNING

MALFUNCTION INDICATOR LAMP	Condition
ON	Engine coolant temperature sensor circuit malfunction is detected, or the ECM's CPU is malfunctioning.
OFF	No malfunction.

- These Diagnostic Trouble Code Numbers are clarified in Diagnostic Test Mode II (SELF-DIAGNOSTIC RESULTS).

DIAGNOSTIC TEST MODE II—SELF-DIAGNOSTIC RESULTS

In this mode, a diagnostic trouble code is indicated by the number of blinks of the MALFUNCTION INDICATOR LAMP as shown below.

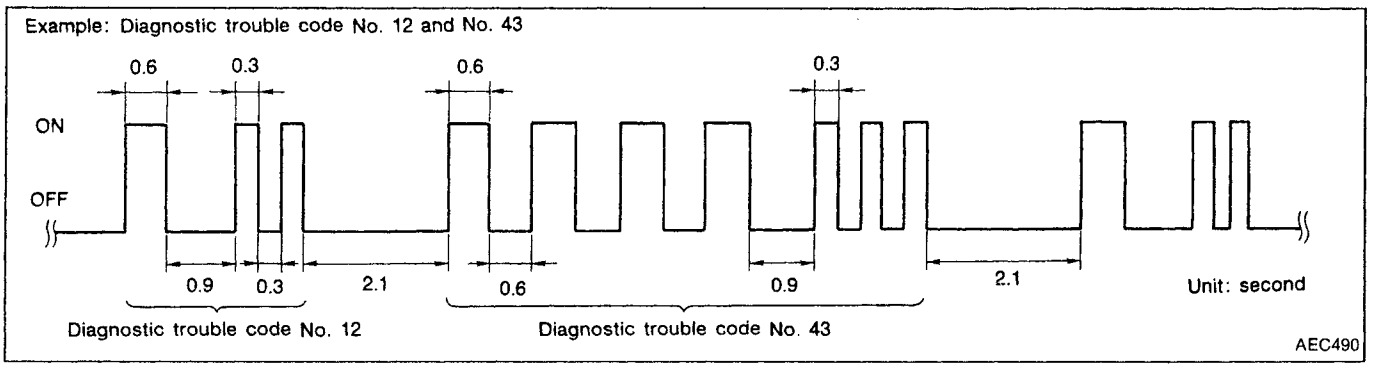

Long (0.6 second) blinking indicates the number of ten digits, and short (0.3 second) blinking indicates the number of single digits. For example, the malfunction indicator lamp blinks 4 times for about 2.5 seconds (0.6 sec x 4 times) and then it blinks three times for about 1 second (0.3 sec x 3 times). This indicates the DTC "43" and refers to the malfunction of the throttle position sensor.
In this way, all the detected malfunctions are classified by their diagnostic trouble code numbers. The DTC "55" refers to no malfunction. (See DIAGNOSTIC TROUBLE CODE CHART, refer to EC-268.)

HOW TO ERASE DIAGNOSTIC TEST MODE II (Self-diagnostic results)

The diagnostic trouble code can be erased from the backup memory in the ECM when the diagnostic test mode is changed from Diagnostic Test Mode II to Diagnostic Test Mode I. (Refer to "HOW TO SWITCH DIAGNOSTIC TEST MODES" on previous page.)

- **If the battery terminal is disconnected, the diagnostic trouble code will be lost from the backup memory within 24 hours.**
- **Be careful not to erase the stored memory before starting trouble diagnoses.**

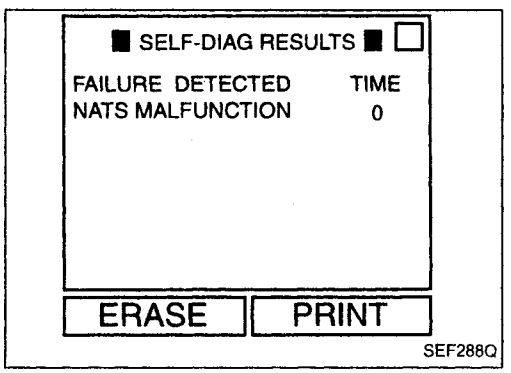

- **If the MIL blinks or "NATS MALFUNCTION" is displayed on "SELF-DIAG RESULTS" screen, perform self-diagnostic results mode with CONSULT using NATS program card (NATS-E940). Refer to EL section.**
- **Confirm no self-diagnostic results of NATS is displayed before touching "ERASE" in "SELF-DIAG RESULTS" mode with CONSULT.**
- **When replacing ECM, initialisation of NATS V2.0 system and registration of all NATS V2.0 ignition key IDs must be carried out with CONSULT using NATS program card (NATS-E940).**
  Therefore, be sure to receive all keys from vehicle owner.
  Regarding the procedures of NATS initialisation and NATS ignition key ID registration, refer to CONSULT operation manual, NATS V2.0.

Simpo PDF Merge and Split Unregistered Version - http://www.simpopdf.com

Malfunction Indicator Lamp (MIL) (Cont'd)

DIAGNOSTIC TEST MODE II—HEATED OXYGEN SENSOR MONITOR

In this mode, the MALFUNCTION INDICATOR LAMP displays the condition of the fuel mixture (lean or rich) which is monitored by the heated oxygen sensor.

MALFUNCTION INDICATOR LAMP	Fuel mixture condition in the exhaust gas	Air fuel ratio feedback control condition
ON	Lean	Closed loop system
OFF	Rich	
Remains ON or OFF	Any condition	Open loop system

To check the heated oxygen sensor function, start engine in Diagnostic Test Mode II. Then warm it up until engine coolant temperature indicator points to middle of gauge.
Next run engine at about 2,000 rpm for about 2 minutes under no-load conditions. Make sure that the MALFUNCTION INDICATOR LAMP comes ON more than 5 times within 10 seconds with engine running at 2,000 rpm under no-load.

EC

Simpo PDF Merge and Split Unregistered Version - http://www.simpopdf.com

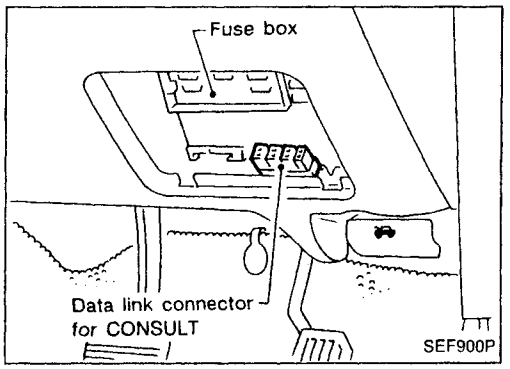

CONSULT

CONSULT INSPECTION PROCEDURE

1. Turn off ignition switch.
2. Connect "CONSULT" to Data link connector for CONSULT. (Data link connector for CONSULT is located behind the fuse box cover.)

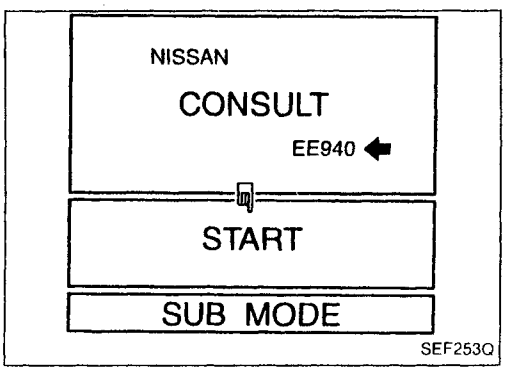

3. Turn on ignition switch.
4. Touch "START".

⬅: Program card
AE930: For Australia

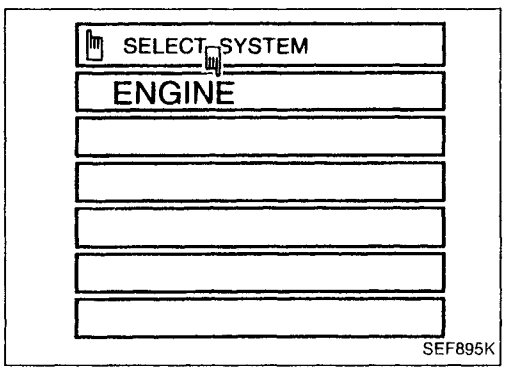

5. Touch "ENGINE".

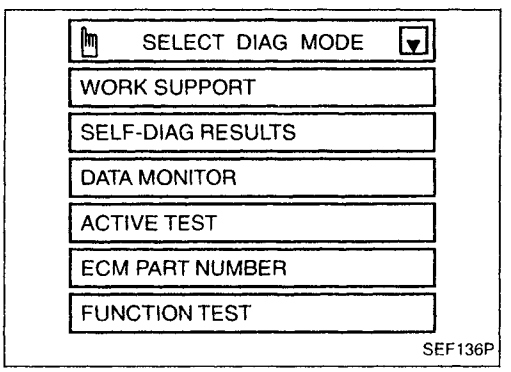

6. Perform each diagnostic test mode according to each service procedure.

For further information, see the CONSULT Operation Manual.

Simpo PDF Merge and Split Unregistered Version - http://www.simpopdf.com

CONSULT (Cont'd)

ECCS COMPONENT PARTS/CONTROL SYSTEMS APPLICATION

Item			DIAGNOSTIC TEST MODE				
			WORK SUPPORT	SELF-DIAG-NOSTIC RESULTS	DATA MONITOR	ACTIVE TEST	FUNCTION TEST
ECCS COMPONENT PARTS	INPUT	Camshaft position sensor		X	X		
		Mass air flow sensor		X	X		
		Engine coolant temperature sensor		X	X	X	
		Heated oxygen sensor			X		X
		Vehicle speed sensor			X		X
		Throttle position sensor	X	X	X		X
		Knock sensor		X			
		Ignition switch (start signal)			X		X
		Air conditioner switch			X		
		Park/Neutral position switch			X		X
		Power steering oil pressure switch			X		X
		Battery voltage			X		
	OUTPUT	Injectors			X	X	X
		Power transistor (Ignition timing)	X	X (Ignition signal)	X	X	X
		IACV-AAC valve	X		X	X	X
		Air conditioner relay			X		
		Fuel pump relay	X		X	X	X
		Cooling fan			X	X	X
		EGR valve & EVAP canister purge control solenoid valve			X	X	X

X: Applicable

EC

Simpo PDF Merge and Split Unregistered Version - http://www.simpopdf.com

CONSULT (Cont'd)

FUNCTION

Diagnostic test mode	Function
Work support	A technician can adjust some devices faster and more accurately by following indications on CONSULT.
Self-diagnostic results	Self-diagnostic results can be read and erased quickly.
Data monitor	Input/Output data in the ECM can be read.
Active test	CONSULT drives some actuators apart from the ECM's and also shifts some parameters in a specified range.
ECM part numbers	ECM part numbers can be read.
Function test	Conducted by CONSULT instead of a technician to determine whether each system is "OK" or "NG".

WORK SUPPORT MODE

WORK ITEM	CONDITION	USAGE
THRTL POS SEN ADJ	CHECK THE THROTTLE POSITION SENSOR SIGNAL. ADJUST IT TO THE SPECIFIED VALUE BY ROTATING THE SENSOR BODY UNDER THE FOLLOWING CONDITIONS. ● IGN SW "ON" ● ENG NOT RUNNING ● ACC PEDAL NOT PRESSED	When adjusting throttle position sensor initial position
IGNITION TIMING ADJ	● IGNITION TIMING FEEDBACK CONTROL WILL BE HELD BY TOUCHING "START". AFTER DOING SO, ADJUST IGNITION TIMING WITH A TIMING LIGHT BY TURNING THE CAMSHAFT POSITION SENSOR.	When adjusting initial ignition timing
IACV-AAC VALVE ADJ	SET ENGINE SPEED AT THE SPECIFIED VALUE UNDER THE FOLLOWING CONDITIONS. ● ENGINE WARMED UP ● NO-LOAD	When adjusting idle speed
FUEL PRESSURE RELEASE	● FUEL PUMP WILL STOP BY TOUCHING "START" DURING IDLING. CRANK A FEW TIMES AFTER ENGINE STALLS.	When releasing fuel pressure from fuel line

Simpo PDF Merge and Split Unregistered Version - http://www.simpopdf.com

CONSULT (Cont'd)

SELF-DIAGNOSTIC MODE

Regarding items detected in "SELF-DIAG RESULTS" mode, refer to "Diagnostic Trouble Code (DTC) Chart". (See page EC-268.)

DATA MONITOR MODE

Monitored item [Unit]	ECM input signals	Main signals	Description	Remarks
CMPS·RPM (REF) [rpm]	○	○	• Indicates the engine speed computed from the REF signal (180° signal) of the camshaft position sensor.	• Accuracy becomes poor if engine speed drops below the idle rpm. • If the signal is interrupted while the engine is running, an abnormal value may be indicated.
MAS AIR/FL SE [V]	○	○	• The signal voltage of the mass air flow sensor is displayed.	• When the engine is stopped, a certain value is indicated.
COOLAN TEMP/S [°C] or [°F]	○	○	• The engine coolant temperature (determined by the signal voltage of the engine coolant temperature sensor) is displayed.	• When the engine coolant temperature sensor is open or short-circuited, ECM enters fail-safe mode. The engine coolant temperature determined by the ECM is displayed.
O2 SEN [V]	○	○	• The signal voltage of the heated oxygen sensor is displayed.	
M/R F/C MNT [RICH/LEAN]	○	○	• Display of heated oxygen sensor signal during air-fuel ratio feedback control: RICH ... means the mixture became "rich", and control is being affected toward a leaner mixture. LEAN ... means the mixture became "lean", and control is being affected toward a rich mixture.	• After turning ON the ignition switch, "RICH" is displayed until air-fuel mixture ratio feedback control begins. • When the air-fuel ratio feedback is clamped, the value just before the clamping is displayed continuously.
VHCL SPEED SE [km/h] or [mph]	○	○	• The vehicle speed computed from the vehicle speed sensor signal is displayed.	
BATTERY VOLT [V]	○	○	• The power supply voltage of ECM is displayed.	
THRTL POS SEN [V]	○	○	• The throttle position sensor signal voltage is displayed.	
START SIGNAL [ON/OFF]	○	○	• Indicates [ON/OFF] condition from the starter signal.	• After starting the engine, [OFF] is displayed regardless of the starter signal.
CLSD THL/POSI [ON/OFF]	○	○	• Indicates the closed throttle position [ON/OFF] determined by the throttle position sensor signal. ON: Closed throttle position OFF: Other than closed throttle position	

NOTE:
Any monitored item that does not match the vehicle being diagnosed is deleted from the display automatically.

EC

Simpo PDF Merge and Split Unregistered Version - http://www.simpopdf.com

CONSULT (Cont'd)

Monitored item [Unit]	ECM input signals	Main signals	Description	Remarks
AIR COND SIG [ON/OFF]	○	○	• Indicates [ON/OFF] condition of the air conditioner switch as determined by the air conditioning signal.	
P/N POSI SW [ON/OFF]	○	○	• Indicates [ON/OFF] condition from the park/neutral position switch signal.	
PW/ST SIGNAL [ON/OFF]	○	○	• Indicates [ON/OFF] condition of the power steering oil pressure switch determined by the power steering oil pressure signal.	
INJ PULSE [msec]		○	• Indicates the actual fuel injection pulse width compensated by ECM according to the input signals.	• When the engine is stopped, a certain computed value is indicated.
IGN TIMING [BTDC]		○	• Indicates the ignition timing computed by ECM according to the input signals.	
IACV-AAC/V [%]		○	• Indicates the idle air control valve (AAC valve) control value computed by ECM according to the input signals.	
A/F ALPHA [%]		○	• Indicates the mean value of the air-fuel ratio feedback correction factor per cycle.	• When the engine is stopped, a certain value is indicated. • This data also includes the data for the air-fuel ratio learning control.
AIR COND RLY [ON/OFF]		○	• Indicates the air conditioner relay control condition (determined by ECM according to the input signal).	
FUEL PUMP RLY [ON/OFF]		○	• Indicates the fuel pump relay control condition determined by ECM according to the input signals.	
COOLING FAN [HI/LOW/OFF]		○	• Indicates the control condition of the cooling fans (determined by ECM according to the input signal). HI ... High speed operation LOW ... Low speed operation OFF ... Stopped	
EGRC SOL/V [ON/OFF]		○	• Indicates the control condition of the EGR valve & EVAP canister purge control solenoid valve (determined by ECM according to the input signal). ON ... EGR and EVAP canister purge operation cut-off OFF ... EGR and EVAP canister purge operation not cut-off	
VOLTAGE [V]			• Voltage measured by the voltage probe.	
PULSE [msec] or [Hz] or [%]			• Pulse width, frequency or duty cycle measured by the pulse probe.	• Only "#" is displayed if item is unable to be measured. • Figures with "#"s are temporary ones. They are the same figures as an actual piece of data which was just previously measured.

Simpo PDF Merge and Split Unregistered Version - http://www.simpopdf.com

CONSULT (Cont'd)

ACTIVE TEST MODE

TEST ITEM	CONDITION	JUDGEMENT	CHECK ITEM (REMEDY)
FUEL INJECTION	• Engine: Return to the original trouble condition • Change the amount of fuel injection using CONSULT.	If trouble symptom disappears, see CHECK ITEM.	• Harness and connector • Fuel injectors • Heated oxygen sensor
IACV-AAC/V OPENING	• Engine: After warming up, idle the engine. • Change the IACV-AAC valve opening percent using CONSULT.	Engine speed changes according to the opening percent.	• Harness and connector • IACV-AAC valve
ENG COOLANT TEMP	• Engine: Return to the original trouble condition • Change the engine coolant temperature indication using CONSULT.	If trouble symptom disappears, see CHECK ITEM.	• Harness and connector • Engine coolant temperature sensor • Fuel injectors
IGNITION TIMING	• Engine: Return to the original trouble condition • Timing light: Set • Retard the ignition timing using CONSULT.	If trouble symptom disappears, see CHECK ITEM.	• Adjust initial ignition timing
POWER BALANCE	• Engine: After warming up, idle the engine. • A/C switch "OFF" • Shift lever "N" • Cut off each injector signal one at a time using CONSULT.	Engine runs rough or dies.	• Harness and connector • Compression • Injectors • Power transistor • Spark plugs • Ignition coils
COOLING FAN	• Ignition switch: ON • Turn the cooling fan "ON" and "OFF" using CONSULT.	Cooling fan moves and stops.	• Harness and connector • Cooling fan motor
FUEL PUMP RELAY	• Ignition switch: ON (Engine stopped) • Turn the fuel pump relay "ON" and "OFF" using CONSULT and listen to operating sound.	Fuel pump relay makes the operating sound.	• Harness and connector • Fuel pump relay
EGRC SOLENOID VALVE	• Ignition switch: ON • Turn solenoid valve "ON" and "OFF" with the CONSULT and listen to operating sound.	Solenoid valve makes an operating sound.	• Harness and connector • Solenoid valve
SELF-LEARNING CONT	• In this test, the coefficient of self-learning control mixture ratio returns to the original coefficient by touching "CLEAR" on the screen.		

EC

Simpo PDF Merge and Split Unregistered Version - http://www.simpopdf.com

CONSULT (Cont'd)

FUNCTION TEST MODE

FUNCTION TEST ITEM	CONDITION	JUDGEMENT		CHECK ITEM (REMEDY)
SELF-DIAG RESULTS	● Ignition switch: ON (Engine stopped) ● Displays the results of on-board diagnostic system.	—		Objective system
CLOSED THROTTLE POSI	● Ignition switch: ON (Engine stopped) ● Closed throttle position is tested when throttle is opened and closed fully. (Closed throttle position is selected by throttle position sensor.)	Throttle valve: opened	OFF	● Harness and connector ● Throttle position sensor ● Throttle position sensor adjustment ● Throttle linkage ● Verify operation in DATA MONITOR mode.
		Throttle valve: closed	ON	
THROTTLE POSI SEN CKT	● Ignition switch: ON (Engine stopped) ● Throttle position sensor circuit is tested when throttle is opened and closed fully.	Range (Throttle valve fully opened — Throttle valve fully closed)	More than 3.0V	● Harness and connector ● Throttle position sensor ● Throttle position sensor adjustment ● Throttle linkage ● Verify operation in DATA MONITOR mode.
PARK/NEUT POSI SW CKT	● Ignition switch: ON (Engine stopped) ● Inhibitor/Neutral position switch circuit is tested when shift lever is manipulated.	Out of N/P positions	OFF	● Harness and connector ● Neutral position switch or inhibitor switch ● Linkage or inhibitor switch adjustment
		In N/P positions	ON	
FUEL PUMP CIRCUIT	● Ignition switch: ON (Engine stopped) ● Fuel pump circuit is tested by checking the pulsation in fuel pressure when fuel tube is pinched.	There is pressure pulsation on the fuel feed hose.		● Harness and connector ● Fuel pump ● Fuel pump relay ● Fuel filter clogging ● Fuel level
EGRC SOL/V CIRCUIT	● Ignition switch: ON (Engine stopped) ● EGR valve & EVAP canister purge control solenoid valve circuit is tested by checking solenoid valve operating noise.	The solenoid valve makes an operating sound every 3 seconds.		● Harness and connector ● EGR valve & EVAP canister purge control solenoid valve
COOLING FAN CIRCUIT	● Ignition switch: ON (Engine stopped) ● Cooling fan circuit is tested when cooling fan is rotated.	The cooling fan rotates and stops every 3 seconds.		● Harness and connector ● Cooling fan motor ● Cooling fan relay

Simpo PDF Merge and Split Unregistered Version - http://www.simpopdf.com

CONSULT (Cont'd)

FUNCTION TEST ITEM	CONDITION	JUDGEMENT		CHECK ITEM (REMEDY)
START SIGNAL CIRCUIT	• Ignition switch: ON → START • Start signal circuit is tested when engine is started by operating the starter. Before cranking, battery voltage and engine coolant temperature are displayed. During cranking, average battery voltage, mass air flow sensor output voltage and cranking speed are displayed.	Start signal: OFF → ON		• Harness and connector • Ignition switch
PW/ST SIGNAL CIRCUIT	• Ignition switch: ON (Engine running) • Power steering circuit is tested when steering wheel is rotated fully and then set to a straight line running position.	Locked position	ON	• Harness and connector • Power steering oil pressure switch • Power steering oil pump
		Neutral position	OFF	
VEHICLE SPEED SEN CKT	• Vehicle speed sensor circuit is tested when vehicle is running at a speed of 10 km/h (6 MPH) or higher.	Vehicle speed sensor input signal is greater than 4 km/h (2 MPH)		• Harness and connector • Vehicle speed sensor • Electric speedometer
IGN TIMING ADJ	• After warming up, idle the engine. • Ignition timing adjustment is checked by reading ignition timing with a timing light and checking whether it agrees with specifications.	The timing light indicates the same value on the screen.		• Adjust ignition timing (by moving crankshaft position sensor or distributor) • Camshaft position sensor drive mechanism
MIXTURE RATIO TEST	• Air-fuel ratio feedback circuit (injection system, ignition system, vacuum system, etc.) is tested by examining the heated oxygen sensor output at 2,000 rpm under non-loaded state.	Heated oxygen sensor COUNT: More than 5 times during 10 seconds		• INJECTION SYS (Injector, fuel pressure regulator, harness or connector) • IGNITION SYS (Spark plug, power transistor, ignition coil, harness or connector) • VACUUM SYS (Intake air leaks) • Heated oxygen sensor circuit • Heated oxygen sensor operation • Fuel pressure high or low • Mass air flow sensor

EC

Simpo PDF Merge and Split Unregistered Version - http://www.simpopdf.com

CONSULT (Cont'd)

FUNCTION TEST ITEM	CONDITION	JUDGEMENT	CHECK ITEM (REMEDY)
POWER BALANCE	• After warming up, idle the engine. • Injector operation of each cylinder is stopped one after another, and resultant change in engine rotation is examined to evaluate combustion of each cylinder. (This is only displayed for models where a sequential multiport fuel injection system is used.)	Difference in engine speed is greater than 25 rpm before and after cutting off the injector of each cylinder.	• Injector circuit (Injector, harness or connector) • Ignition circuit (Spark plug, power transistor, ignition coil, harness or connector) • Compression • Valve timing
IACV-AAC/V SYSTEM	• After warming up, idle the engine. • IACV-AAC valve system is tested by detecting change in engine speed when IACV-AAC valve opening is changed to 0%, 20% and 80%.	Difference in engine speed is greater than 150 rpm between when valve opening is at 80% and at 20%.	• Harness and connector • IACV-AAC valve • Air passage restriction between air inlet and IACV-AAC valve • IAS (Idle adjusting screw) adjustment

Simpo PDF Merge and Split Unregistered Version - http://www.simpopdf.com

CONSULT (Cont'd)

REAL TIME DIAGNOSIS IN DATA MONITOR MODE

CONSULT has two kinds of triggers and they can be selected by touching "SETTING" in "DATA MONITOR" mode.

1. "AUTO TRIG" (Automatic trigger):
   - The malfunction will be identified on the CONSULT screen in real time.
     In other words, DTC and malfunction item will be displayed at the moment the malfunction is detected by ECM.
     DATA MONITOR can be performed continuously until a malfunction is detected. However, DATA MONITOR cannot continue any longer after the malfunction detection.
2. "MANU TRIG" (Manual trigger):
   - DTC and malfunction item will not be displayed automatically on CONSULT screen even though a malfunction is detected by ECM.
     DATA MONITOR can be performed continuously even though a malfunction is detected.

Use these triggers as follows:

1. "AUTO TRIG"
   - While trying to detect the DTC by performing the "DTC CONFIRMATION PROCEDURE", be sure to select to "DATA MONITOR (AUTO TRIG)" mode. You can confirm the malfunction at the moment it is detected.
   - While narrowing down the possible causes, CONSULT should be set in "DATA MONITOR (AUTO TRIG)" mode, especially in case the incident is intermittent.
     Inspect the circuit by gently shaking (or twisting) suspicious connectors, components and harness in the "DTC CONFIRMATION PROCEDURE". The moment a malfunction is found the DTC will be displayed. (Refer to GI section, "Incident Simulation Tests" in "HOW TO PERFORM EFFICIENT DIAGNOSIS FOR AN ELECTRICAL INCIDENT".)
2. "MANU TRIG"
   - If the malfunction is displayed as soon as "DATA MONITOR" is selected, reset CONSULT to "MANU TRIG". By selecting MANU TRIG you can monitor and store the data. The data can be utilized for further diagnosis, such as a comparison with the value for the normal operating condition.

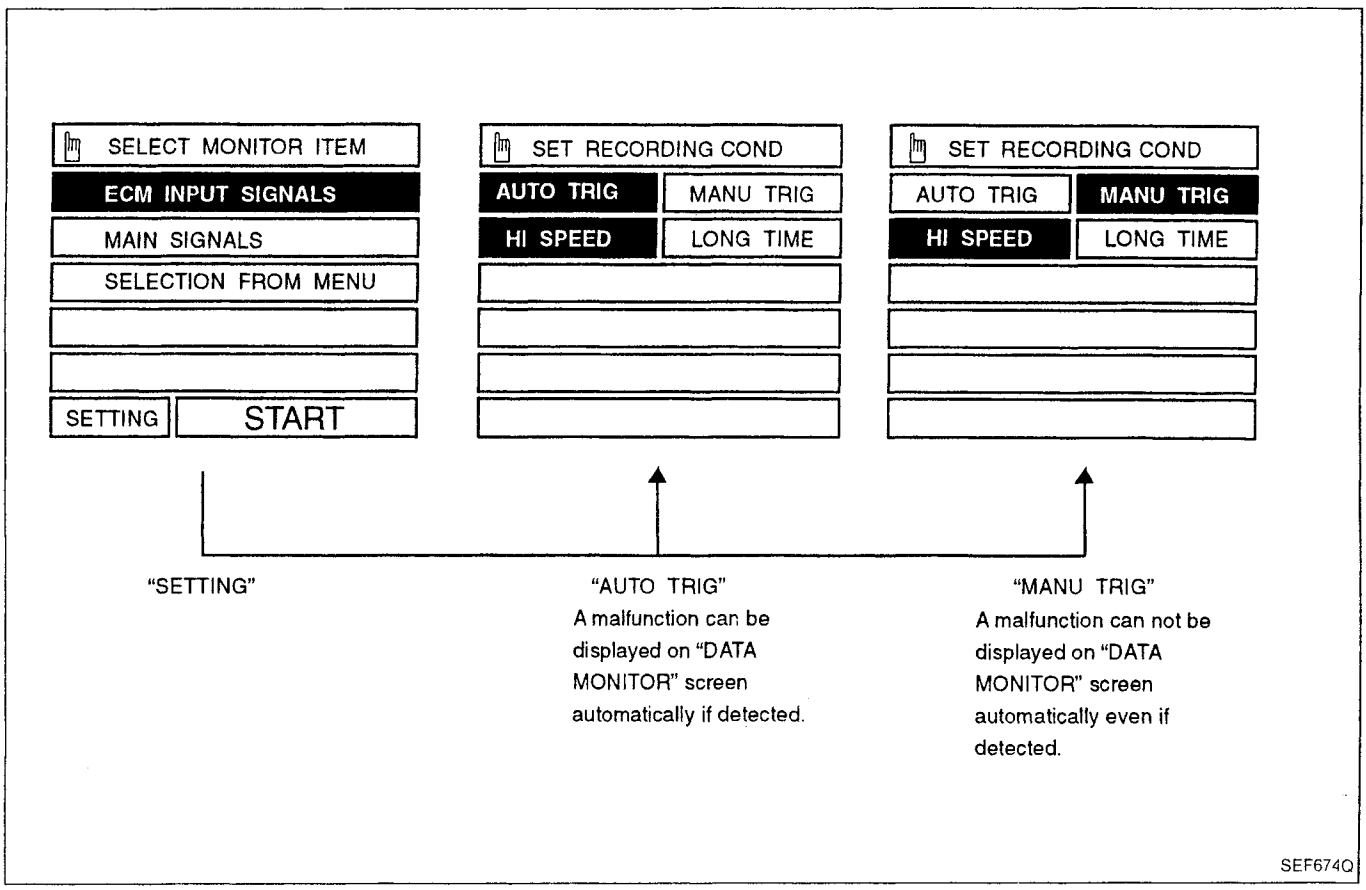

Simpo PDF Merge and Split Unregistered Version - http://www.simpopdf.com

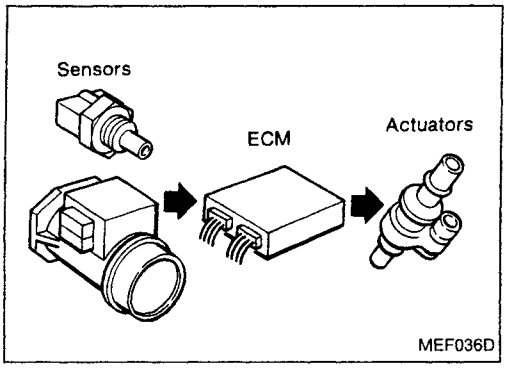

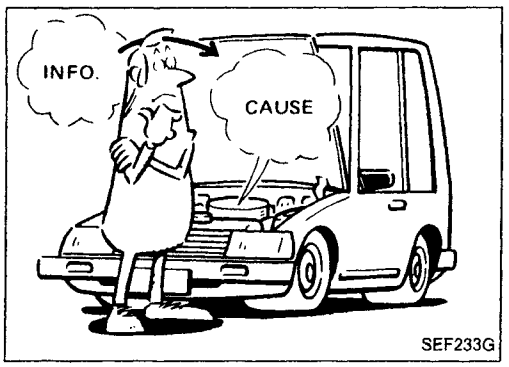

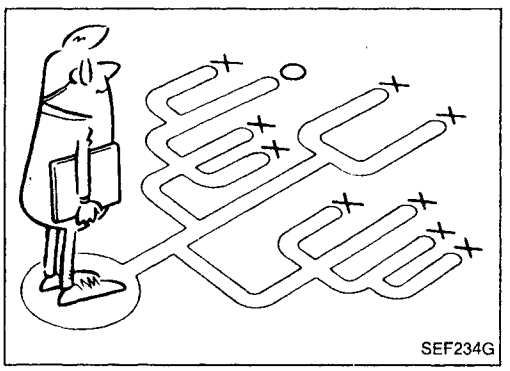

Introduction

The engine has an ECM to control major systems such as fuel control, ignition control, idle air control system, etc. The ECM accepts input signals from sensors and instantly drives actuators. It is essential that both input and output signals are proper and stable. At the same time, it is important that there are no problems such as vacuum leaks, fouled spark plugs, or other problems with the engine.

It is much more difficult to diagnose a problem that occurs intermittently rather than continuously. Most intermittent problems are caused by poor electric connections or improper wiring. In this case, careful checking of suspected circuits may help prevent the replacement of good parts.

A visual check only may not find the cause of the problems. A road test with CONSULT or a circuit tester connected should be performed. Follow the "Work Flow" on the next page.

Before undertaking actual checks, take just a few minutes to talk with a customer who approaches with a driveability complaint. The customer can supply good information about such problems, especially intermittent ones. Find out what symptoms are present and under what conditions they occur. A "Diagnostic Worksheet" like the example on EC-267 should be used.

Start your diagnosis by looking for "conventional" problems first. This will help troubleshoot driveability problems on an electronically controlled engine vehicle.

Simpo PDF Merge and Split Unregistered Version - http://www.simpopdf.com

Work Flow

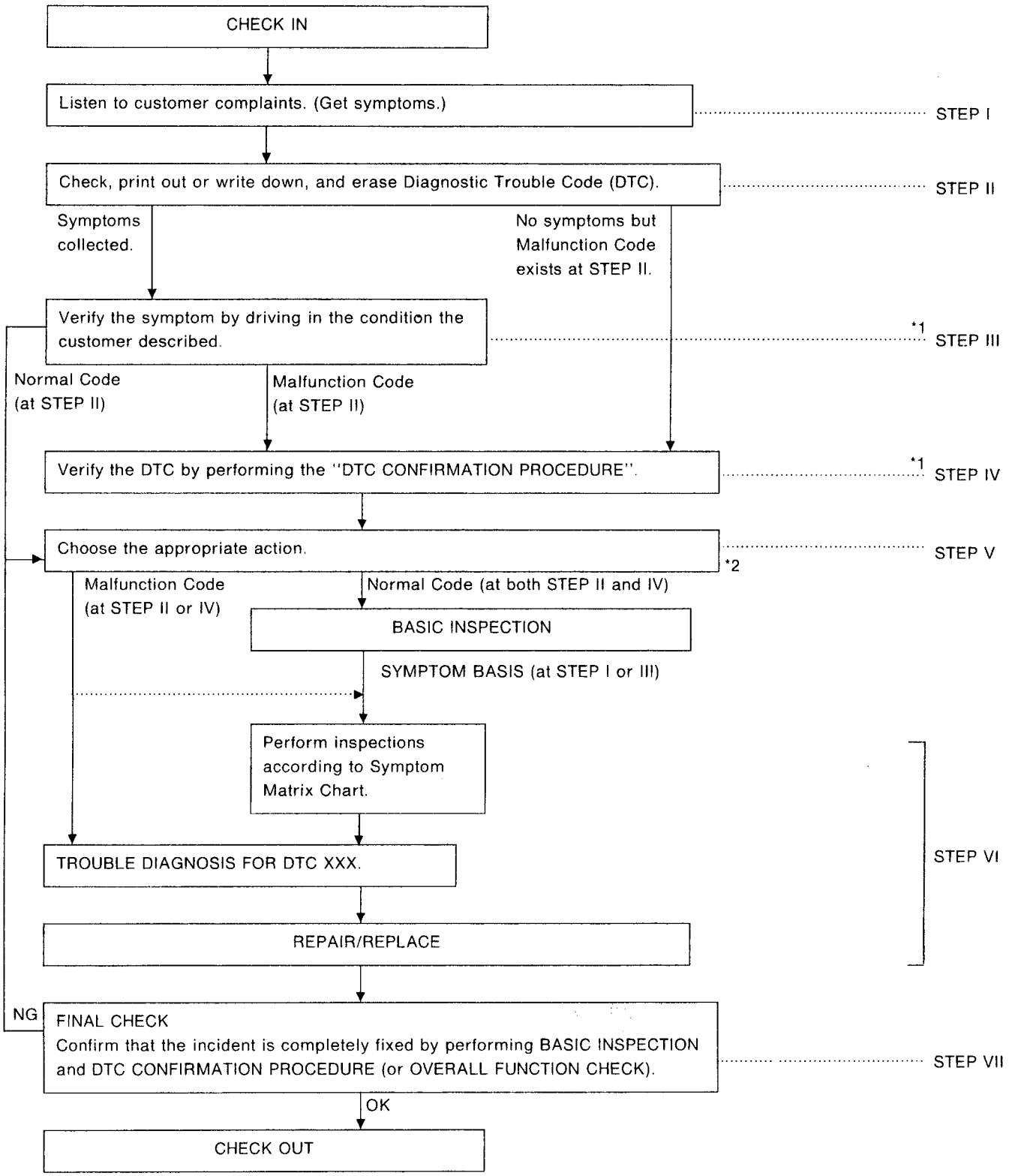

***1: If the incident cannot be duplicated, refer to GI section ("Incident Simulation Tests", "HOW TO PERFORM EFFICIENT DIAGNOSIS FOR AN ELECTRICAL INCIDENT").**

***2: If the on-board diagnostic system cannot be performed, check main power supply and ground circuit. Refer to "TROUBLE DIAGNOSIS FOR POWER SUPPLY", EC-286.**

Simpo PDF Merge and Split Unregistered Version - http://www.simpopdf.com

Description for Work Flow

STEP	DESCRIPTION
STEP I	Get detailed information about the conditions and the environment when the incident/symptom occurred using the "DIAGNOSTIC WORKSHEET" as shown on the next page.
STEP II	Before confirming the concern, check and write down (print out using CONSULT) the Diagnostic Trouble Code (DTC), then erase the code. The DTC can be used when duplicating the incident at STEP III & IV. Study the relationship between the cause, specified by DTC, and the symptom described by the customer. (The "Symptom Matrix Chart" will be useful. Refer to EC-274.)
STEP III	Try to confirm the symptom and under what conditions the incident occurs. The "DIAGNOSTIC WORK SHEET" is useful to verify the incident. Connect CONSULT to the vehicle in DATA MONITOR (AUTO TRIG) mode and check real time diagnosis results. If the incident cannot be verified, perform INCIDENT SIMULATION TESTS. Refer to GI section. If the malfunction code is detected, skip STEP IV and perform STEP V.
STEP IV	Try to detect the Diagnostic Trouble Code (DTC) by driving in (or performing) the "DTC CONFIRMATION PROCEDURE". Check and read the DTC by using CONSULT. During the DTC verification, be sure to connect CONSULT to the vehicle in DATA MONITOR (AUTO TRIG) mode and check real time diagnosis results. If the incident cannot be verified, perform INCIDENT SIMULATION TESTS. Refer to GI section. In case the "DTC CONFIRMATION PROCEDURE" is not available, perform the "OVERALL FUNCTION CHECK" instead. The DTC cannot be displayed by this check, however, this simplified "check" is an effective alternative. The "NG" result of the "OVERALL FUNCTION CHECK" is the same as the DTC detection.
STEP V	Take the appropriate action based on the results of STEP I through IV. If the malfunction code is indicated, proceed to TROUBLE DIAGNOSIS FOR DTC XX. If the normal code is indicated, proceed to the BASIC INSPECTION. Refer to EC-271. Then perform inspections according to the Symptom Matrix Chart. Refer to EC-274.
STEP VI	Identify where to begin diagnosis based on the relationship study between symptom and possible causes. Inspect the system for mechanical binding, loose connectors or wiring damage using (tracing) "Harness Layouts". Gently shake the related connectors, components or wiring harness with CONSULT set in "DATA MONITOR (AUTO TRIG)" mode. Check the voltage of the related ECM terminals or monitor the output data from the related sensors with CONSULT. Refer to EC-277. The "DIAGNOSTIC PROCEDURE" in EC section contains a description based on open circuit inspection. A short circuit inspection is also required for the circuit check in the DIAGNOSTIC PROCEDURE. For details, refer to GI section ("HOW TO PERFORM EFFICIENT DIAGNOSIS FOR AN ELECTRICAL INCIDENT", "Circuit Inspection"). Repair or replace the malfunction parts.
STEP VII	Once you have repaired the circuit or replaced a component, you need to run the engine in the same conditions and circumstances which resulted in the customer's initial complaint. Perform the "DTC CONFIRMATION PROCEDURE" and confirm the normal code (Diagnostic trouble code No. 55) is detected. If the incident is still detected in the final check, perform STEP VI by using a different method from the previous one. Before returning the vehicle to the customer, be sure to erase the unnecessary (already fixed) DTC in ECM. (Refer to EC-252.)

Simpo PDF Merge and Split Unregistered Version - http://www.simpopdf.com

KEY POINTS

WHAT ..... Vehicle & engine model
WHEN ..... Date, Frequencies
WHERE..... Road conditions
HOW ..... Operating conditions, Weather conditions, Symptoms

SEF907L

Diagnostic Worksheet

There are many operating conditions that lead to the malfunction of engine components. A good grasp of such conditions can make troubleshooting faster and more accurate.
In general, each customer feels differently about a problem. It is important to fully understand the symptoms or conditions for a customer complaint.
Utilize a diagnostic worksheet like the one shown below in order to organize all the information for troubleshooting.

EC

WORKSHEET SAMPLE

Customer name MR/MS		Model & Year	VIN
Engine #		Trans.	Mileage
Incident Date		Manuf. Date	In Service Date
Symptoms	☐ Startability	☐ Impossible to start ☐ No combustion ☐ Partial combustion ☐ Partial combustion affected by throttle position ☐ Partial combustion NOT affected by throttle position ☐ Possible but hard to start ☐ Others [ ]	
	☐ Idling	☐ No fast idle ☐ Unstable ☐ High idle ☐ Low idle ☐ Others [ ]	
	☐ Driveability	☐ Stumble ☐ Surge ☐ Knock ☐ Lack of power ☐ Intake backfire ☐ Exhaust backfire ☐ Others [ ]	
	☐ Engine stall	☐ At the time of start ☐ While idling ☐ While accelerating ☐ While decelerating ☐ Just after stopping ☐ While loading	
Incident occurrence		☐ Just after delivery ☐ Recently ☐ In the morning ☐ At night ☐ In the daytime	
Frequency		☐ All the time ☐ Under certain conditions ☐ Sometimes	
Weather conditions		☐ Not affected	
	Weather	☐ Fine ☐ Raining ☐ Snowing ☐ Others [ ]	
	Temperature	☐ Hot ☐ Warm ☐ Cool ☐ Cold ☐ Humid °F	
Engine conditions		☐ Cold ☐ During warm-up ☐ After warm-up Engine speed 0 2,000 4,000 6,000 8,000 rpm	
Road conditions		☐ In town ☐ In suburbs ☐ Highway ☐ Off road (up/down)	
Driving conditions		☐ Not affected ☐ At starting ☐ While idling ☐ At racing ☐ While accelerating ☐ While cruising ☐ While decelerating ☐ While turning (RH/LH) Vehicle speed 0 10 20 30 40 50 60 MPH	
Malfunction indicator lamp		☐ Turned on ☐ Not turned on	

Simpo PDF Merge and Split Unregistered Version - http://www.simpopdf.com

Diagnostic Trouble Code (DTC) Chart

ENGINE RELATED ITEMS

Diagnostic trouble code No. / MIL	Detected items (Screen terms for CONSULT, "SELF-DIAG RESULTS" mode)	Malfunction is detected when ...
11	Camshaft position sensor circuit (CAMSHAFT POSI SEN)	• Either 1° or 180° signal is not detected by the ECM for the first few seconds during engine cranking. • Either 1° or 180° signal is not detected by the ECM often enough while the engine speed is higher than the specified rpm. • The relation between 1° and 180° signals is not in the normal range during the specified rpm.
12	Mass air flow sensor circuit (MASS AIR FLOW SEN)	• An excessively high or low voltage is entered to ECM. • Voltage sent to ECM is not practical when compared with the camshaft position sensor signal and throttle position sensor signal.
13	Engine coolant temperature sensor circuit (COOLANT TEMP SEN)	• An excessively high or low voltage from the sensor is detected by the ECM.
21	Ignition signal circuit (IGN SIGNAL-PRIMARY)	• The ignition signal in the primary circuit is not detected by the ECM during engine cranking or running.
34	Knock sensor circuit (KNOCK SENSOR)	• An excessively low or high voltage from the sensor is detected by the ECM.
43	Throttle position sensor circuit (THROTTLE POSI SEN)	• An excessively low or high voltage from the sensor is detected by the ECM. • Voltage sent to ECM is not practical when compared with the mass air flow sensor and camshaft position sensor signals.
55	No failure (NO SELF DIAGNOSTIC FAILURE INDICATED...)	• No malfunction related to OBD system is detected by either ECM or A/T control unit.

*1: This is Quick Reference of "DTC CONFIRMATION PROCEDURE".
Details are described in each TROUBLE DIAGNOSIS FOR DTC XX.
Abbreviations are as follows:
IGN: ON : Turning the ignition switch ON is required for the ECM to detect a malfunction (if one exists).
RUNNING : Running engine is required for the ECM to detect a malfunction (if one exists).

Simpo PDF Merge and Split Unregistered Version - http://www.simpopdf.com

Diagnostic Trouble Code (DTC) Chart (Cont'd)

X: Applicable
—: Not applicable

Check Items (Possible Cause)	"DTC CONFIRMATION PROCEDURE" Quick Ref. *1	"OVERALL FUNCTION CHECK" Quick Ref. *2	Fail Safe System	Reference Page
● Harness or connectors (The sensor circuit is open or shorted.) ● Camshaft position sensor ● Starter motor ● Starting system circuit (EL section) ● Dead (Weak) battery	RUNNING	—	—	EC-289
● Harness or connectors (The sensor circuit is open or shorted.) ● Mass air flow sensor	RUNNING	RUNNING	X	EC-293
● Harness or connectors (The sensor circuit is open or shorted.) ● Engine coolant temperature sensor	IGN: ON	—	X	EC-297
● Harness or connectors (The ignition primary circuit is open or shorted.) ● Power transistor unit ● Camshaft position sensor ● Camshaft position sensor circuit	RUNNING	—	—	EC-301
● Harness or connectors (The sensor circuit is open or shorted.) ● Knock sensor	RUNNING	—	—	EC-306
● Harness or connectors (The sensor circuit is open or shorted.) ● Throttle position sensor	—	IGN: ON	X	EC-309
● No failure	—	—	—	—

*2: ● The "OVERALL FUNCTION CHECK" is a simplified and effective way to inspect a component or circuit. In some cases, the "OVERALL FUNCTION CHECK" is used rather than a "DIAGNOSTIC TROUBLE CODE CONFIRMATION PROCEDURE".
When no DTC CONFIRMATION PROCEDURE is available, the "NG" result of the OVERALL FUNCTION CHECK can be considered to mean the same as a DTC detection.
● During an "NG" OVERALL FUNCTION CHECK, the DTC might not be confirmed.

EC

Simpo PDF Merge and Split Unregistered Version - http://www.simpopdf.com

Fail-Safe Chart

The ECM enters fail-safe mode, if any of the following DTCs is recorded due to the open or short circuit.

<table>
<tr><th>DTC No.
MIL</th><th>Detected items</th><th>Engine operating condition in fail-safe mode</th></tr>
<tr><td>12</td><td>Mass air flow sensor circuit</td><td>Engine speed will not rise more than 2,400 rpm due to the fuel cut.</td></tr>
<tr><td>13</td><td>Engine coolant temperature sensor circuit</td><td>Engine coolant temperature will be determined based on the time after turning ignition switch "ON" or "START".
<table>
<tr><th>Condition</th><th>Engine coolant temperature decided</th></tr>
<tr><td>Just as ignition switch is turned ON or Start</td><td>30°C (86°F)</td></tr>
<tr><td>More than 4 minutes after ignition ON or Start</td><td>80°C (176°F)</td></tr>
<tr><td>Except as shown above</td><td>30 - 80°C (86 - 176°F)
(Depends on the time)</td></tr>
</table></td></tr>
<tr><td>43</td><td>Throttle position sensor circuit</td><td>Throttle position will be determined based on the injected fuel amount and the engine speed.
Therefore, acceleration will be poor.
<table>
<tr><th>Condition</th><th>Driving condition</th></tr>
<tr><td>When engine is idling</td><td>Normal</td></tr>
<tr><td>When accelerating</td><td>Poor acceleration</td></tr>
</table></td></tr>
<tr><td>—</td><td>Start signal circuit</td><td>If the ECM always receives a start signal, the ECM will judge the start signal "OFF" when engine speed is above 1,000 rpm.
This prevents extra enrichment.
After the engine speed is below 200 rpm, start-up enrichment will be allowed until the engine speed reaches 1,000 rpm.</td></tr>
<tr><td>—</td><td>ECM</td><td>Fail-safe system activating condition when ECM is malfunctioning
The computing function of the ECM was judged to be malfunctioning.
When the fail-safe system activates (i.e., if the ECM detects a malfunction condition in the CPU of ECM), the MALFUNCTION INDICATOR LAMP on the instrument panel lights to warn the driver.
Engine control, with fail-safe system, operates when ECM is malfunctioning
When the fail-safe system is operating, fuel injection, ignition timing, fuel pump operation, IACV-AAC valve operation and cooling fan operation are controlled under certain limitations.
<table>
<tr><th></th><th>Operation</th></tr>
<tr><td>Engine speed</td><td>Engine speed will not rise more than 3,000 rpm</td></tr>
<tr><td>Fuel injection</td><td>Simultaneous multiport fuel injection system</td></tr>
<tr><td>Ignition timing</td><td>Ignition timing is fixed at the preset valve</td></tr>
<tr><td>Fuel pump</td><td>Fuel pump relay is "ON" when engine is running and "OFF" when engine stalls</td></tr>
<tr><td>IACV-AAC valve</td><td>Full open</td></tr>
<tr><td>Cooling fans</td><td>Cooling fan relay "ON" (High speed condition) when engine is running, and "OFF" when engine stalls</td></tr>
</table></td></tr>
</table>

Simpo PDF Merge and Split Unregistered Version - http://www.simpopdf.com

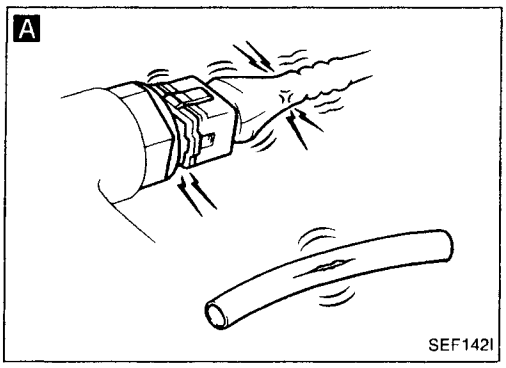

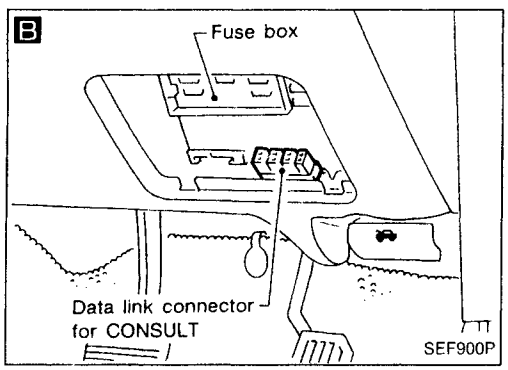

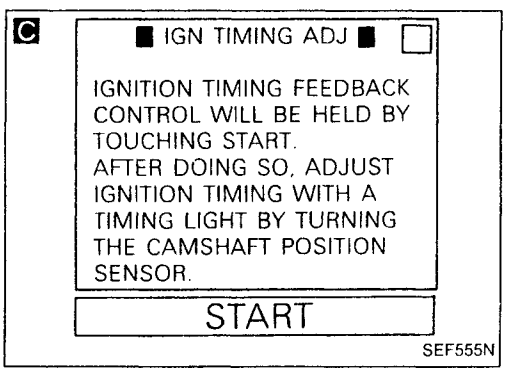

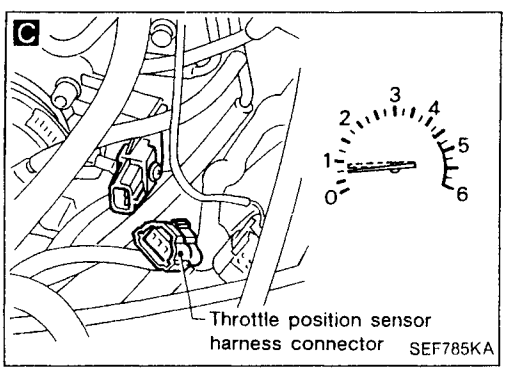

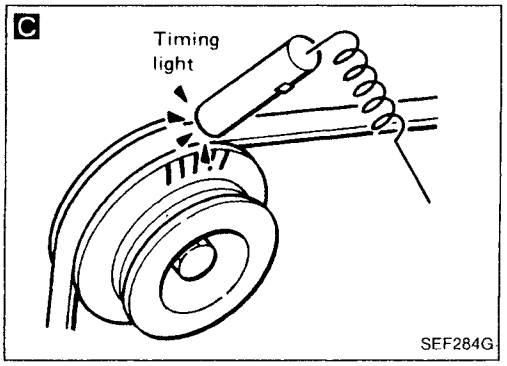

Basic Inspection

Precaution:

Perform Basic Inspection without electrical or mechanical loads applied;

- **Headlamp switch is OFF,**
- **Air conditioner switch is OFF,**
- **Rear defogger switch is OFF,**
- **Steering wheel is in the straight-ahead position, etc.**

A

BEFORE STARTING

1. Check service records for any recent repairs that may indicate a related problem, or the current need for scheduled maintenance.
2. Open engine hood and check the following:
   - Harness connectors for improper connections
   - Vacuum hoses for splits, kinks, or improper connections
   - Wiring for improper connections, pinches, or cuts

B

CONNECT CONSULT TO THE VEHICLE.
Connect "CONSULT" to the data link connector for CONSULT and select "ENGINE" from the menu. Refer to EC-254.

DOES ENGINE START? — No → Go to E.

Yes

C

CHECK IGNITION TIMING.

1. Warm up engine sufficiently.
2. Select "IGN TIMING ADJ" in "WORK SUPPORT" mode.
3. Touch "START".
4. Check ignition timing at idle using timing light.

Ignition timing:
15° ± 2° BTDC

NG → Adjust ignition timing by turning distributor.

1. Warm up engine sufficiently.
2. Stop engine and disconnect throttle position sensor harness connector.
3. Start engine.
4. Check ignition timing at idle using timing light.

Ignition timing:
15° ± 2° BTDC

OK

(Go to Ⓐ on next page.)

Simpo PDF Merge and Split Unregistered Version - http://www.simpopdf.com

Basic Inspection (Cont'd)

D

■ IGN TIMING ADJ ■

IGNITION TIMING FEEDBACK CONTROL WILL BE HELD BY TOUCHING START.
AFTER DOING SO, ADJUST IGNITION TIMING WITH A TIMING LIGHT BY TURNING THE CAMSHAFT POSITION SENSOR.

START

SEF546N

E

■ THRTL POS SEN ADJ ■

*** ADJ MONITOR ***

THRTL POS SEN 0.52V

======== MONITOR ========

CMPS•RPM (REF) 0rpm
CLSD THL/P ON

SEF165P

E

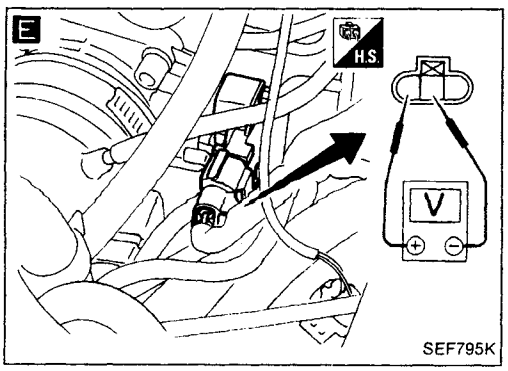

SEF795K

Ⓐ

D

CHECK IDLE ADJ. SCREW INITIAL SET RPM.

1. Select "IGN TIMING ADJ" in "WORK SUPPORT" mode.
2. When touching "START", does engine speed fall to **750 ± 50 rpm (A/T in "N" position)?**

NG → Adjust engine speed by turning idle adjusting screw.

OR

Does engine run at **750 ± 50 rpm (A/T in "N" position)?**

OK

Reconnect throttle position sensor harness connector.

E

CHECK THROTTLE POSITION SENSOR IDLE POSITION.

1. Perform "THRTL POS SEN ADJ" in "WORK SUPPORT" mode.
2. Check that output voltage of throttle position sensor is approx. 0.35 to 0.65V (Throttle valve fully closes.) and "CLSD THL/POSI" stays "ON".

OR

Measure output voltage of throttle position sensor using voltmeter, and check that it is approx. 0.35 to 0.65V. (Throttle valve fully closed.)

NG → Adjust output voltage to 0.50V by rotating throttle position sensor body.

RESET IDLE POSITION MEMORY.

1. Warm up engine sufficiently.
2. Turn ignition switch "OFF" and wait at least 5 seconds.
3. Disconnect throttle position sensor harness connector.
4. Start engine and wait at least 5 seconds in "N" position.
5. Reconnect throttle position sensor harness connector while running engine.

OK

Ⓑ

(Go to next page)

Simpo PDF Merge and Split Unregistered Version - http://www.simpopdf.com

Basic Inspection (Cont'd)

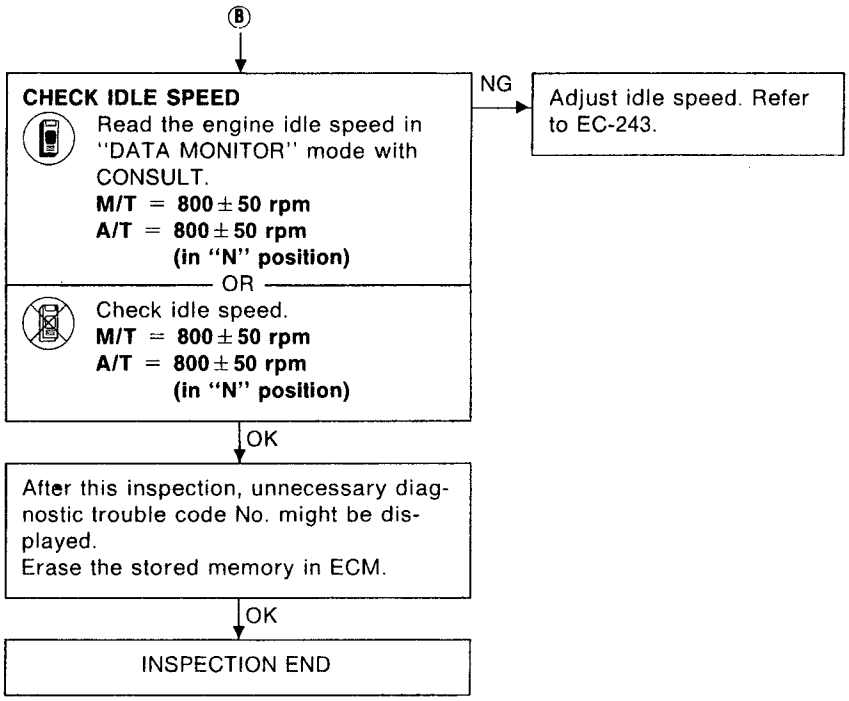

EC

Simpo PDF Merge and Split Unregistered Version - http://www.simpopdf.com

Symptom Matrix Chart

SYSTEM — Basic engine control system		SYMPTOM																		Reference page
		HARD/NO START (COLD)	HARD/NO RE-START (HOT)	ROUGH IDLE	ENGINE STALL	HESITATION/FLAT SPOT/SURGE	LACK OF POWER/POOR ACCELERATION	NO RETURN TO IDLE/HIGH IDLE	SPARK KNOCK (PINGING)	BACK FIRE	AFTER FIRE	ENGINE RUN ON (DIESELING)	EXCESSIVE FUEL CONSUMPTION	EXCESSIVE OIL CONSUMPTION	OVERHEATS	OVERCOOLS	OVERCHARGING	BATTERY DEAD (UNDER CHARGE)	
		1A	1B	1C	1F	1H	1R	1S	1M	1J	1L	1K	1T	1V	1N	1P	1X	1Y	
Fuel	Fuel pump circuit	●	●	●	●	●	●		○	○			●					○	EC-327
	Fuel pressure regulator system	●	●	●	●	●	●	○	○	○	○		●						EC-241
	Injector circuit	●	●	●	●	●	●		○	○	○		●						EC-324
	Evaporative emission system	○	○	○	○	○	○	○	○	○	○		○						EC-238
Air	Positive crankcase ventilation system	○	○	●	○	●	○	○	○	○	○		○	○					EC-240
	IACV-Air regulator	●	●	●	●	●	●	●	○	○			○						EC-332
	Incorrect idle speed adjustment	○	○	○	○			○					○						EC-243
	IACV-AAC valve circuit	●	●	●	●	●	●	●	○	●	○		●					○	EC-335
	IACV-FICD solenoid valve circuit	○	○	○	○	○	○	○	○	○			○						EC-339
Ignition	Incorrect ignition timing adjustment	○	○	●	○	●	●		●	○	○		●						EC-243
	Ignition circuit	●	●	●	●	●	●		●		●		●						EC-301
EGR	EGR valve & EVAP canister purge control solenoid valve circuit				●	●	○		●		○		●						EC-319
	EGR system	○	○	●	●	●	○	○	●	○			○						EC-319
Main power supply and ground circuit		○	○	○	○	○	○		○	○			○		○			○	EC-286
Cooling	Cooling fan circuit	○	○	○	○	○	○	○	○				○		○	○		○	EC-343
Air conditioner circuit		○	○	○	○	○	○	○	○				○					○	HA section

● ; High Possibility Item
○; Low Possibility Item

(continued on next page)

Simpo PDF Merge and Split Unregistered Version - http://www.simpopdf.com

Symptom Matrix Chart (Cont'd)

SYSTEM — ECCS system		SYMPTOM																		Reference page
		HARD/NO START (COLD)	HARD/NO RE-START (HOT)	ROUGH IDLE	ENGINE STALL	HESITATION/FLAT SPOT/SURGE	LACK OF POWER/POOR ACCELERATION	NO RETURN TO IDLE/HIGH IDLE	SPARK KNOCK (PINGING)	BACK FIRE	AFTER FIRE	ENGINE RUN ON (DIESELING)	EXCESSIVE FUEL CONSUMPTION	EXCESSIVE OIL CONSUMPTION	OVERHEATS	OVERCOOLS	OVERCHARGING	BATTERY DEAD (UNDER CHARGE)	
		1A	1B	1C	1F	1H	1R	1S	1M	1J	1L	1K	1T	1V	1N	1P	1X	1Y	
ECCS	Camshaft position sensor circuit	●	○	○	●	●	○		○	○	○		○						EC-289
	Mass air flow sensor circuit	●	●	●	●	●	●		○	○	○		●						EC-293
	Heated oxygen sensor circuit			●	●	●	●		○	○	○		●						EC-362
	Engine coolant temperature sensor circuit	●	●	●	●	●	●	●	○	○	○		●						EC-297
	Throttle position sensor circuit			●	●	●	●	●					●						EC-309
	Incorrect throttle position sensor adjustment			○	●	○	○	●			○		○						EC-272
	Vehicle speed sensor circuit				○	○	○						○						EC-314
	Knock sensor circuit					○	○		○				○						EC-306
	ECM	○	○	○	○	○	○	○	○	○	○	○	○		○				EC-270
	Start signal circuit	○	○																EC-317
	Park/Neutral position switch circuit			○		○	○						○						EC-357
	Power steering oil pressure switch circuit			○	○														EC-354

● ; High Possibility Item
○; Low Possibility Item

(continued on next page)

EC

Simpo PDF Merge and Split Unregistered Version - http://www.simpopdf.com

Symptom Matrix Chart (Cont'd)

SYSTEM — Engine mechanical & other		SYMPTOM																		Reference page
		HARD/NO START (COLD)	HARD/NO RE-START (HOT)	ROUGH IDLE	ENGINE STALL	HESITATION/FLAT SPOT/SURGE	LACK OF POWER/POOR ACCELERATION	NO RETURN TO IDLE/HIGH IDLE	SPARK KNOCK (PINGING)	BACK FIRE	AFTER FIRE	ENGINE RUN ON (DIESELING)	EXCESSIVE FUEL CONSUMPTION	EXCESSIVE OIL CONSUMPTION	OVERHEATS	OVERCOOLS	OVERCHARGING	BATTERY DEAD (UNDER CHARGE)	
		1A	1B	1C	1F	1H	1R	1S	1M	1J	1L	1K	1T	1V	1N	1P	1X	1Y	
Fuel	Fuel tank	○	○		○															
	Fuel piping	○	○	○	○	○	○		○	○	○		○							
	Vapor lock		○		○															
	Valve deposit	○	○	○	○	○	○		○	○			○							
	Poor fuel (Heavy weight gasoline, Low octane)	○	○	○	○	○	○		○	○			○							—
Air	Air duct			○	○	○	○						○							
	Air cleaner			○	○	○	○						○							
	Air leakage from air duct (Mass air flow sensor — throttle body)	○	○	○	○	○	○	○	○	○			○							
	Throttle body, Throttle wire	●		●	●	●	●	●					●							FE section
	Air leakage from intake manifold/ Collector/Gasket	○	○	○	●	○	○	○	○	○			○							—
Cranking	Battery	○	○	○	○	○	○						○				○	○		
	Alternator circuit	○	○	○	○	○	○						○				○	○		EL section
	Starter circuit	●	●																	
	Flywheel	●	○																	—
	Inhibitor switch	○	○																	AT section
Engine	Cylinder head	●	○	●	●	●	●		●	○			○							
	Cylinder head gasket	●	○	○	●	○	●		○				○	○	○					
	Cylinder block	●	○	○	○	○	○		○				○	○						
	Piston	●	○	○	●	○	○		●				○	○						
	Piston ring	●	○	○	○	○	○		○				○	○						
	Connecting rod	○	○	○	○	○	○		○				○							
	Bearing	○	○	○	○	○	○		○				○							
	Crankshaft	○	○	○	○	○	○		○				○							
Valve mechanism	Timing chain	●	○	○	●	●	●		○	○			○							
	Camshaft	●	○	●	●	●	○		○				○							
	Intake valve	●	○	○	○	○	○		●	○			○	○						
	Exhaust valve	●	○	○	○	○	○		○		○		○	○						
	Hydraulic lash adjuster			○	○	○	○		○	○			○							—
Exhaust	Exhaust manifold/Tube/Muffler/Gasket	○	○	○	○	○	○		○	○	○		○							
	Three way catalyst	●	○	○	●	○	○		○	○	○		○							
Lubrication	Oil pan/Oil strainer/Oil pump/Oil filter/ Oil gallery	●	○	●	○	○	○		○				○	○						
	Oil level (Low)/Filthy oil	○	○	○	○	○	○		○				○	○						
Cooling	Radiator/Hose/Radiator filler cap	○	○	○	○	○	○		○				○		○					
	Thermostat	○	○	○	○	○	○	○	○				○		○	○				
	Water pump	○	○	○	○	○	○		○				○		○					
	Water gallery	○	○	○	○	○	○		○				○		○					
	Cooling fan	○	○	○	○	○	○	○	○				○		○	○				
	Coolant level (low)/Contaminated coolant	○	○	○	○	○	○		○				○		○					

● ; High Possibility Item
○; Low Possibility Item

Simpo PDF Merge and Split Unregistered Version - http://www.simpopdf.com

CONSULT Reference Value in Data Monitor Mode

Remarks:

- Specification data are reference values.
- Specification data are output/input values which are detected or supplied by the ECM at the connector.
  * Specification data may not be directly related to their components signals/values/operations.
  (i.e., Adjust ignition timing with a timing light before monitoring IGN TIMING. Specification data might be displayed even when ignition timing is not adjusted to specification. This IGN TIMING monitors the data calculated by the ECM according to the input signals from the camshaft position sensor and other ignition timing related sensors.)
- If the real-time diagnosis results are NG, and the on-board diagnostic system results are OK, when diagnosing the mass air flow sensor, first check to see if the fuel pump control circuit is normal.

EC

MONITOR ITEM	CONDITION		SPECIFICATION
CMPS·RPM (REF)	• Tachometer: Connect • Run engine and compare tachometer indication with the CONSULT value.		Almost the same speed as the CONSULT value.
MAS AIR/FL SE	• Engine: After warming up • Air conditioner switch: OFF • Shift lever: "N" • No-load	Idle	1.3 - 1.7V
		2,000 rpm	1.7 - 2.1V
COOLAN TEMP/S	• Engine: After warming up		More than 70°C (158°F)
O2 SEN	• Engine: After warming up	Maintaining engine speed at 2,000 rpm	0 - 0.3V ↔ 0.6 - 1.0V
M/R F/C MNT			LEAN ↔ RICH Changes more than 5 times during 10 seconds.
VHCL SPEED SE	• Turn drive wheels and compare speedometer indication with the CONSULT value		Almost the same speed as the CONSULT value
BATTERY VOLT	• Ignition switch: ON (Engine stopped)		11 - 14V
THRTL POS SEN	• Ignition switch: ON (Engine stopped)	Throttle valve fully closed	0.35 - 0.65V
		Throttle valve fully opened	Approx. 4.0V
START SIGNAL	• Ignition switch: ON → START → ON		OFF → ON → OFF
CLSD THL/POSI	• Ignition switch: ON (Engine stopped)	Throttle valve: Idle position	ON
		Throttle valve: Slightly open	OFF
AIR COND SIG	• Engine: After warming up, idle the engine	Air conditioner switch: OFF	OFF
		Air conditioner switch: ON (Compressor operates)	ON
P/N POSI SW	• Ignition switch: ON	Shift lever "P" or "N"	ON
		Except above	OFF

Simpo PDF Merge and Split Unregistered Version - http://www.simpopdf.com

CONSULT Reference Value in Data Monitor Mode (Cont'd)

MONITOR ITEM	CONDITION		SPECIFICATION
PW/ST SIGNAL	• Engine: After warming up, idle the engine	Steering wheel in neutral position (forward direction)	OFF
		The steering wheel is turned	ON
INJ PULSE	• Engine: After warming up • Air conditioner switch: OFF • Shift lever: "N" • No-load	Idle	2.5 - 3.7 msec.
		2,000 rpm	1.9 - 2.8 msec.
IGN TIMING	ditto	Idle	13 - 15° BTDC
		2,000 rpm	More than 25° BTDC
IACV-AAC/V	ditto	Idle	20 - 40%
		2,000 rpm	—
A/F ALPHA	• Engine: After warming up	Maintaining engine speed at 2,000 rpm	53 - 155%
AIR COND RLY	• Air conditioner switch: OFF → ON		OFF → ON
FUEL PUMP RLY	• Ignition switch is turned to ON (Operates for 5 seconds) • Engine running and cranking • When engine is stopped (stops in 1.0 seconds)		ON
	• Except as shown above		OFF
COOLING FAN	• After warming up engine, idle the engine. • Air conditioner switch: OFF • Vehicle stopped	Engine coolant temperature is 94°C (201°F) or less for A/T models, and 99°C (210°F) or less for M/T models	OFF
		Engine coolant temperature is between 95°C (203°F) and 104°C (219°F) for A/T models only	LOW
		Engine coolant temperature is 105°C (221°F) or more for A/T models, and 100°C (212°F) or more for M/T models	HIGH
EGRC SOL/V	• Engine: After warming up • Air conditioner switch: OFF • Shift lever: "N" • No-load	Idle	ON
		2,000 rpm	OFF

Simpo PDF Merge and Split Unregistered Version - http://www.simpopdf.com

Major Sensor Reference Graph in Data Monitor Mode

The following are the major sensor reference graphs in "DATA MONITOR" mode.
(Select "HI SPEED" in "DATA MONITOR" with CONSULT.)

THRTL POS SEN, CLSD THL/POSI

Below is the data for "THRTL POS SEN" and "CLSD THL/POSI" when depressing the accelerator pedal with the ignition switch "ON".
The signal of "THRTL POS SEN" should rise gradually without any intermittent drop or rise after "CLSD THL/POSI" is changed from "ON" to "OFF".

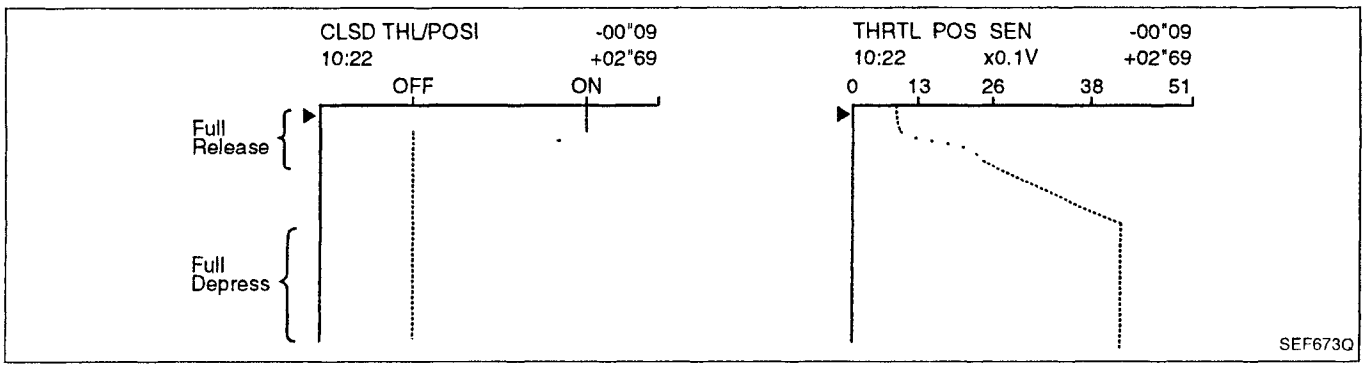

CMPS·RPM (REF), MAS AIR/FL SE, THRTL POS SEN, O2 SEN, INJ PULSE

Below is the data for "CMPS·RPM (REF)", "MAS AIR/FL SE", "THRTL POS SEN", "O2 SEN" and "INJ PULSE" when revving quickly up to 4,800 rpm under no load after warming up engine sufficiently.
Each value is for reference, the exact value may vary.

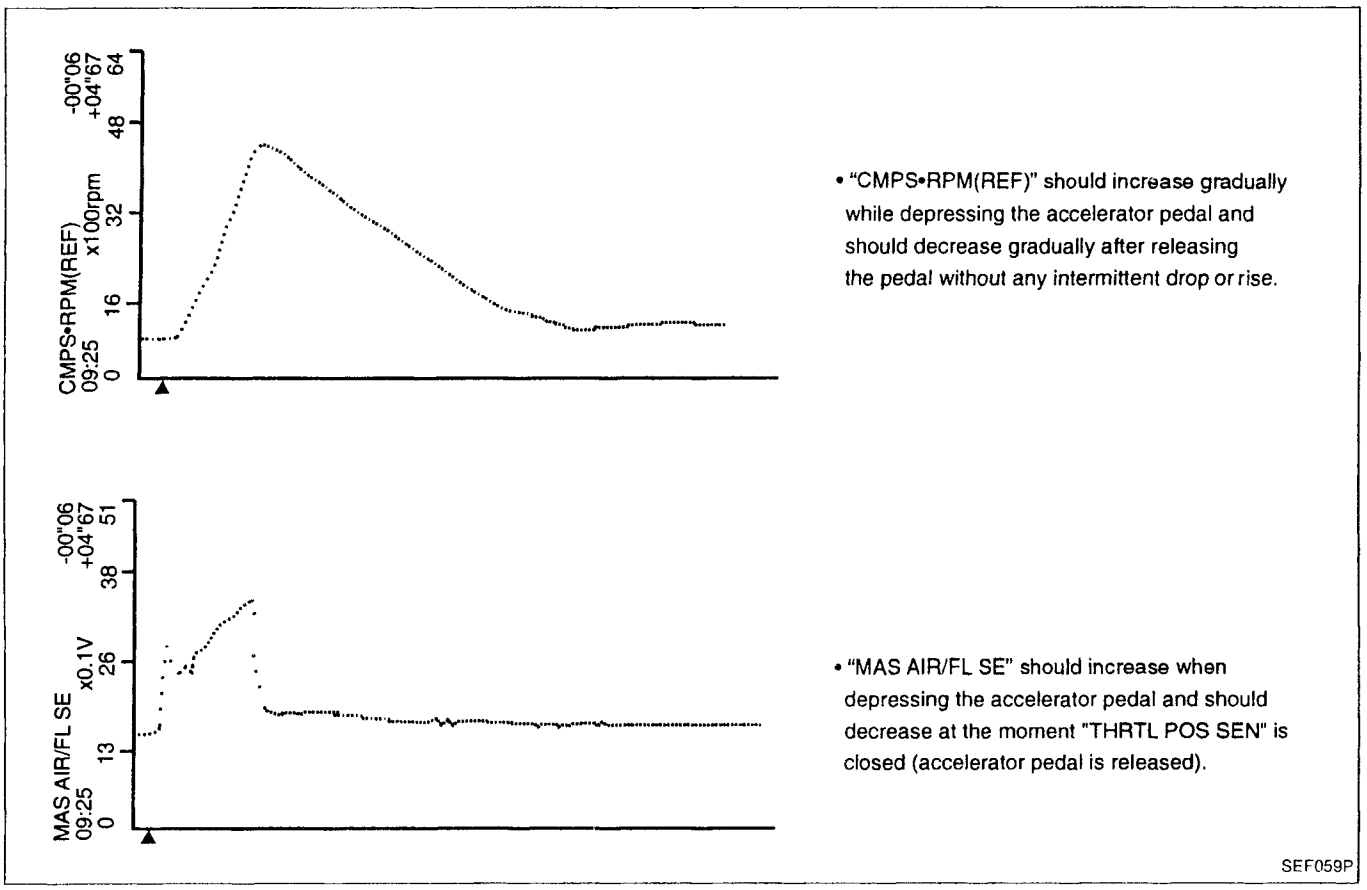

Simpo PDF Merge and Split Unregistered Version - http://www.simpopdf.com

Major Sensor Reference Graph in Data Monitor Mode (Cont'd)

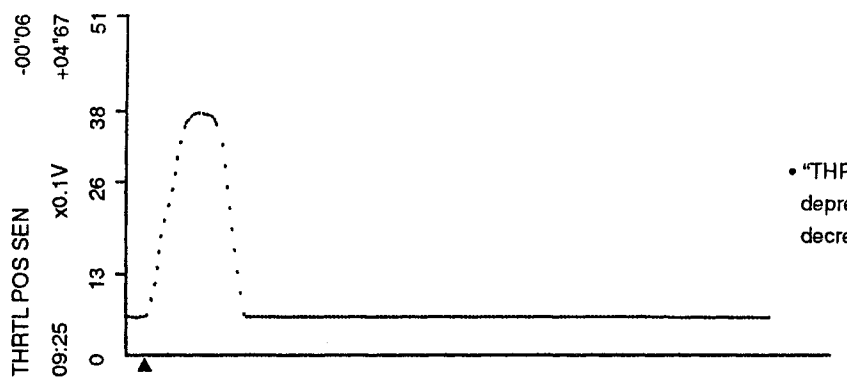

• "THRTL POS SEN" should increase while depressing the accelerator pedel and should decrease while releasing it.

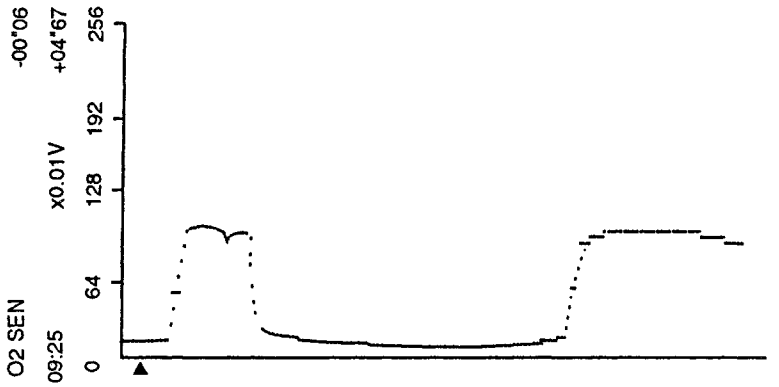

• "O2 SEN" may increase immediately after depressing the accelerator pedel and may decrease after releasing the pedal.

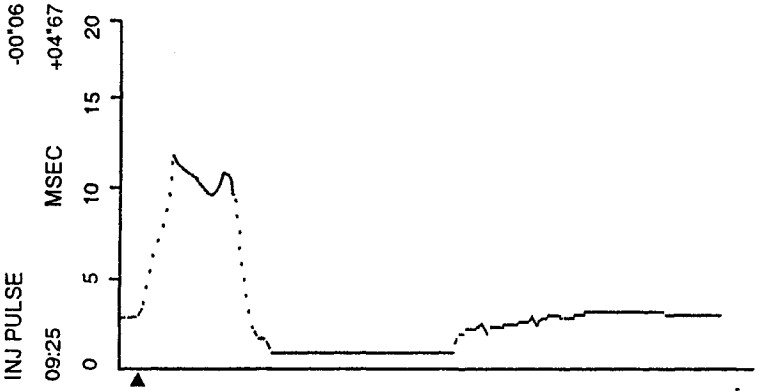

• "INJ PULSE" should increase when depressing the accelerator pedal and should decrease when the pedal is released.

SEF259QA

Simpo PDF Merge and Split Unregistered Version - http://www.simpopdf.com

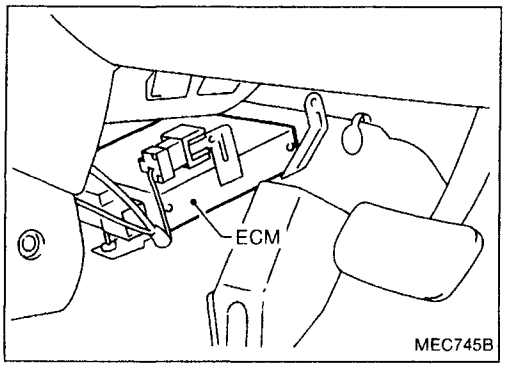

ECM Terminals and Reference Value

PREPARATION

1. ECM is located behind the center console. For this inspection, remove the front passenger center console panel.

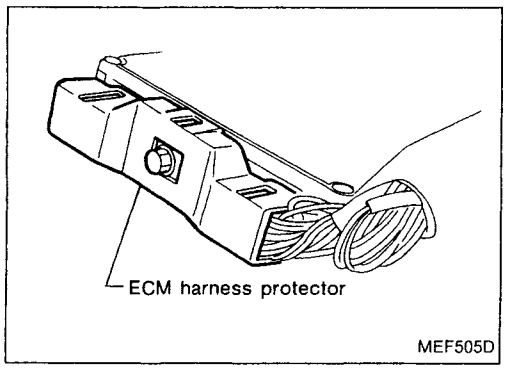

2. Remove ECM harness protector.

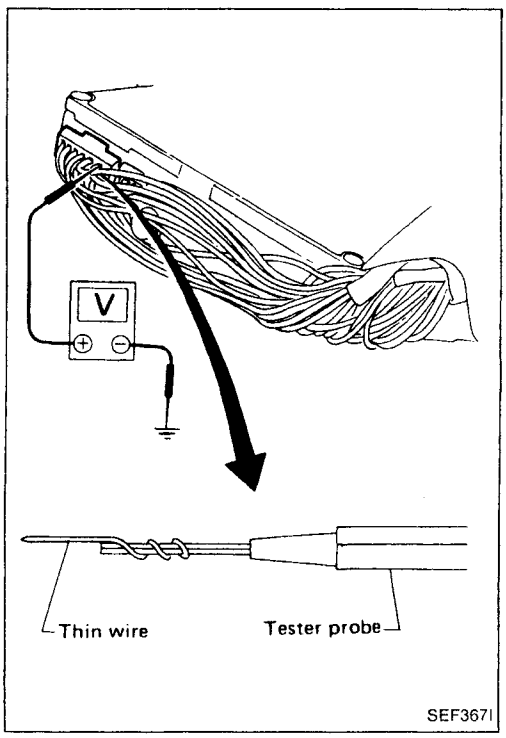

3. Perform all voltage measurements with the connectors connected. Extend tester probe as shown to perform tests easily.

ECM HARNESS CONNECTOR TERMINAL LAYOUT

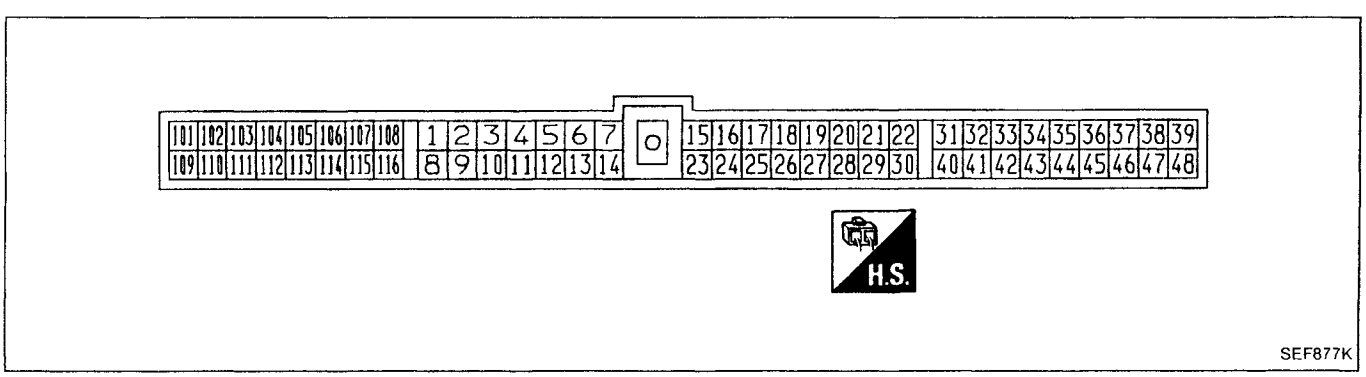

Simpo PDF Merge and Split Unregistered Version - http://www.simpopdf.com

ECM Terminals and Reference Value (Cont'd)

ECM inspection table

*Data are reference values.

TERMINAL NO.	WIRE COLOR	ITEM	CONDITION	*DATA
1	W/B	Ignition signal	Engine is running. └ Idle speed	0.2 - 0.3V
			Engine is running. └ Engine speed is 2,000 rpm.	Approximately 0.7V
2	L/OR	Tachometer	Engine is running. └ Idle speed	Approximately 0.9V
3	GY/R	Ignition check	Engine is running. └ Idle speed	Approximately 13V
4	W/G	ECCS relay (Self-shut-off)	Engine is running. Ignition switch "OFF" └ For a few seconds after turning ignition switch "OFF"	0 - 1V
			Ignition switch "OFF" └ A few seconds after turning ignition switch "OFF" and thereafter	BATTERY VOLTAGE (11 - 14V)
6	B/W	ECCS ground	Engine is running. └ Idle speed	Engine ground
7	G/B	Data link connector for CONSULT	Engine is running. └ Idle speed	Approximately 13.5V
14	G/W			Approximately 0V
15	GY/L			Approximately 2.5V
23	G/R			Approximately 0V
9	LG/R	Cooling fan relay (Low speed)	Engine is running. └ Cooling fan is not operating.	BATTERY VOLTAGE (11 - 14V)
			Engine is running. └ Cooling fan is operating.	Approximately 0V
10	LG	Cooling fan relay (High speed)	Engine is running. ├ Cooling fan is not operating. └ Cooling fan is operating at low speed.	BATTERY VOLTAGE (11 - 14V)
			Engine is running. └ Cooling fan is operating at high speed.	Approximately 0V
11	Y	Air conditioner relay	Engine is running. └ Both A/C switch and blower fan switch are "ON".	Approximately 0V
			Engine is running. └ A/C switch is "OFF".	BATTERY VOLTAGE (11 - 14V)
13	B/W	ECCS ground	Engine is running. └ Idle speed	Engine ground

Simpo PDF Merge and Split Unregistered Version - http://www.simpopdf.com

ECM Terminals and Reference Value (Cont'd)

*Data are reference values.

TERMINAL NO.	WIRE COLOR	ITEM	CONDITION	*DATA
16	OR	Mass air flow sensor	Engine is running. (Warm-up condition) └ Idle speed	1.3 - 1.7V
			Engine is running. (Warm-up condition) └ Engine speed is 2,000 rpm.	1.7 - 2.1V
17	W	Mass air flow sensor ground	Engine is running. └ Idle speed	Approximately 0V
18	BR/Y	Engine coolant temperature sensor	Engine is running.	0 - 5.0V Output voltage varies with engine coolant temperature.
19	W	Heated oxygen sensor	Engine is running. └ After warming up sufficiently	0 - Approximately 1.0V
20	Y	Throttle position sensor	Ignition switch "ON" (Warm-up condition) └ Accelerator pedal released	0.35 - 0.65V
			Ignition switch "ON" └ Accelerator pedal fully depressed	Approximately 4V
21	B	Sensor's ground	Engine is running. └ Idle speed	Approximately 0V
22 30	L	Camshaft position sensor (Reference signal)	Engine is running.	0.1 - 0.4V
24	OR/L	Malfunction indicator lamp	Ignition switch "ON"	Approximately 1.5V
			Engine is running.	BATTERY VOLTAGE (11 - 14V)
27	W	Knock sensor	Engine is running. └ Idle speed	Approximately 2.5V
29	B	Sensor's ground	Engine is running. └ Idle speed	Approximately 0V
31 40	B/W	Camshaft position sensor (Position signal)	Engine is running.	2.0 - 3.0V
32	PU/R	Vehicle speed sensor	Ignition switch "ON" ├ Engine stopped and gear position is "Neutral position". └ While rotating drive wheel by hand	Varies from 0 to 5V
34	B/Y	Start signal	Ignition switch "ON"	Approximately 0V
			Ignition switch "START"	BATTERY VOLTAGE (11 - 14V)

EC

Simpo PDF Merge and Split Unregistered Version - http://www.simpopdf.com

ECM Terminals and Reference Value (Cont'd)

*Data are reference values.

TERMINAL NO.	WIRE COLOR	ITEM	CONDITION	*DATA
35	G/OR	Neutral position switch/Inhibitor switch	Ignition switch "ON" "N" or "P" position (A/T) Neutral position (M/T)	0V
			Ignition switch "ON" Except the above gear position	BATTERY VOLTAGE (11 - 14V)
36	B/R	Ignition switch	Ignition switch "OFF"	0V
			Ignition switch "ON"	BATTERY VOLTAGE (11 - 14V)
37	P/L	Throttle position sensor power supply	Ignition switch "ON"	Approximately 5V
38 47	W/R	Power supply for ECM	Ignition switch "ON"	BATTERY VOLTAGE (11 - 14V)
39	B	ECCS ground	Engine is running. Idle speed	Engine ground
41	G	Air conditioner switch	Engine is running. Both air conditioner switch and blower fan switch are "ON".	Approximately 0V
			Engine is running. Air conditioner switch is "OFF".	BATTERY VOLTAGE (11 - 14V)
43	PU/W	Power steering oil pressure switch	Engine is running. Steering wheel is being turned.	0V
			Engine is running. Steering wheel is not being turned.	7 - 9V
46	W/L	Power supply (Back-up)	Ignition switch "OFF"	BATTERY VOLTAGE (11 - 14V)
48	B	ECCS ground	Engine is running. Idle speed	Engine ground
109	W/L	Current return	Ignition switch "OFF"	BATTERY VOLTAGE (11 - 14V)
101	R/B	Injector No. 1	Engine is running.	BATTERY VOLTAGE (11 - 14V)
103	G/B	Injector No. 3		
110	Y/B	Injector No. 2		
112	L/B	Injector No. 4		

Simpo PDF Merge and Split Unregistered Version - http://www.simpopdf.com

ECM Terminals and Reference Value (Cont'd)

*Data are reference values.

TERMINAL NO.	WIRE COLOR	ITEM	CONDITION	*DATA
104	B/P	Fuel pump relay	Ignition switch "ON" └ For 5 seconds after turning ignition switch "ON" Engine is running.	Approximately 0V
			Ignition switch "ON" └ 5 seconds after turning ignition switch "ON" and thereafter	BATTERY VOLTAGE (11 - 14V)
105	P	EGR valve & EVAP canister purge control solenoid valve	Engine is running. └ Engine speed is 4,000 rpm.	0.6 - 0.8V
			Engine is running. └ Idle speed	BATTERY VOLTAGE (11 - 14V)
107 108	B/Y	ECCS ground	Engine is running. └ Idle speed	Engine ground
111	OR	Heated oxygen sensor heater	Engine is running. └ Engine speed is below 3,200 rpm.	Approximately 0.2V
			Engine is running. └ Engine speed is above 3,200 rpm.	BATTERY VOLTAGE (11 - 14V)
113	SB	IACV-AAC valve	Engine is running. └ Idle speed	11 - 14V
			Engine is running. ├ Steering wheel is being turned. ├ Air conditioner is operating. ├ Rear window defogger switch is "ON". └ Lighting switch is "ON".	2 - 11V
115	P/B	Torque converter clutch solenoid valve (A/T models)	Engine is running. └ Idle speed	Approximately 0V
			Engine is running. (Warm-up condition) └ Vehicle speed is 60 km/h (37 MPH) or more in "D" position	BATTERY VOLTAGE (11 - 14V)
116	B/Y	ECCS ground	Engine is running. └ Idle speed	Engine ground

EC

Simpo PDF Merge and Split Unregistered Version - http://www.simpopdf.com

Main Power Supply and Ground Circuit

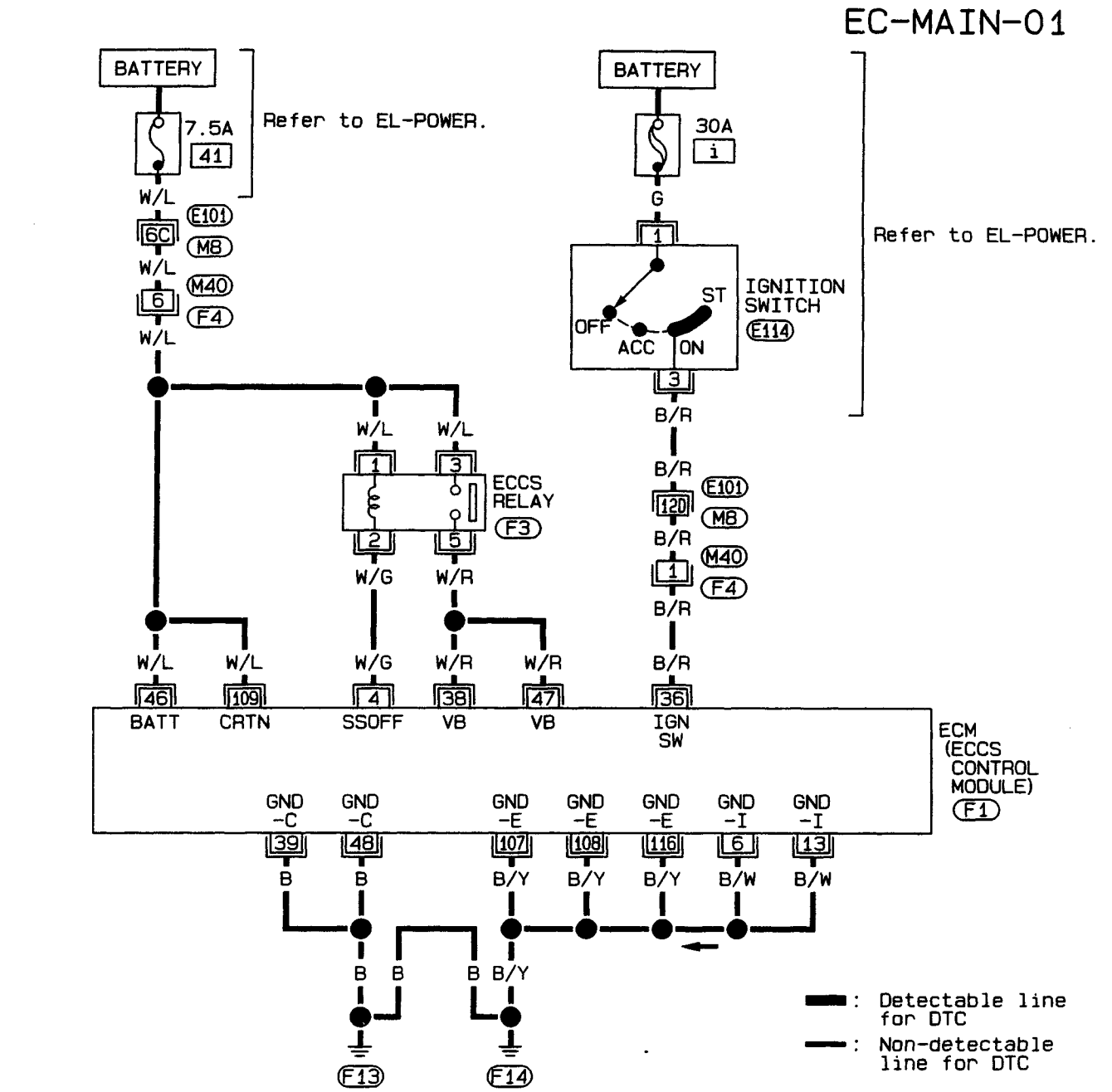

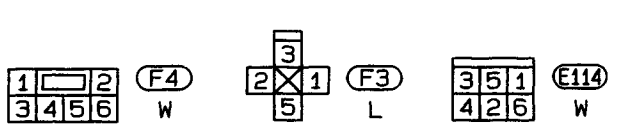

Refer to last page (Foldout page).

M8, E101

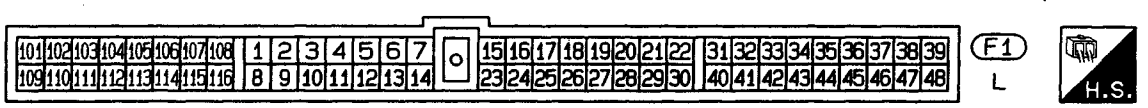

HEC002

Simpo PDF Merge and Split Unregistered Version - http://www.simpopdf.com

Main Power Supply and Ground Circuit (Cont'd)

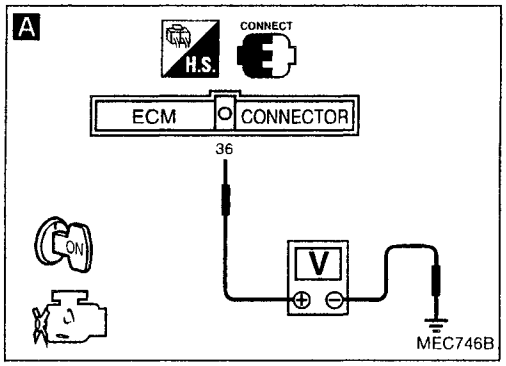

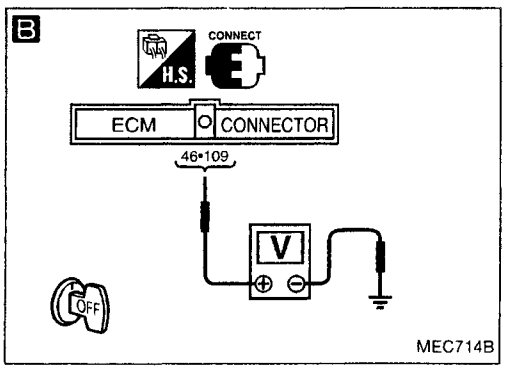

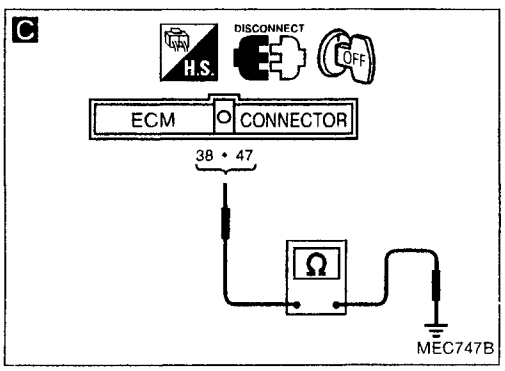

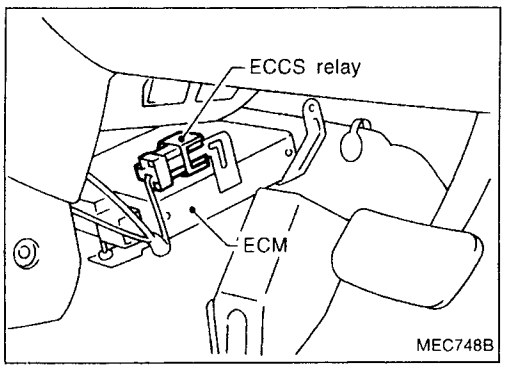

INSPECTION START

Start engine.
Is engine running?

No → **A**

CHECK POWER SUPPLY-I.
1. Turn ignition switch "ON".
2. Check voltage between ECM terminal (36) and ground with CONSULT or tester.
   Voltage: Battery voltage

If NG, check the following.
- Harness connectors (F4), (M40)
- Harness connectors (M8), (E101)
- Harness for open or short between ECM and ignition switch

If NG, repair harness or connectors.

OK → Go to H "CHECK GROUND CIRCUIT" on next page.

Yes → **B**

CHECK POWER SUPPLY-II.
1. Stop engine.
2. Check voltage between ECM terminals (46), (109) and ground with CONSULT or tester.
   Voltage: Battery voltage

NG → Check the following.
- Harness connectors (F4), (M40)
- Harness connectors (M8), (E101)
- 7.5A fuse
- Harness for open or short between ECM and battery

If NG, repair harness or connectors.

OK → **C**

CHECK POWER SUPPLY-III.
1. Turn ignition switch "ON" and then "OFF".
2. Check voltage between ECM terminals (38), (47) and ground with CONSULT or tester.
   Voltage:
   After turning ignition switch "OFF", battery voltage will exist for a few seconds, then drop to approximately 0V.

OK → Go to H "CHECK GROUND CIRCUIT" on next page.

Case-1: Battery voltage does not exist.
Case-2: Battery voltage exists for more than a few seconds.

NG
- Case-1 → Ⓐ
- Case-2 → Go to G "CHECK ECCS RELAY" on next page.

EC

Simpo PDF Merge and Split Unregistered Version - http://www.simpopdf.com

Main Power Supply and Ground Circuit (Cont'd)

D

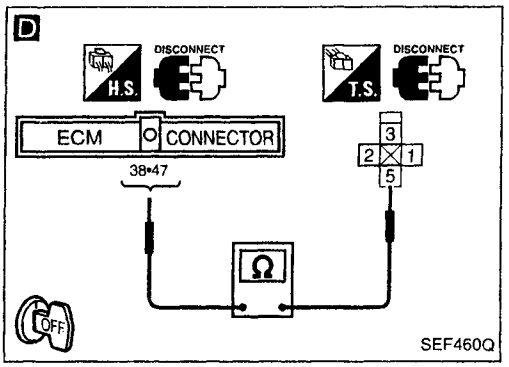

SEF460Q

E

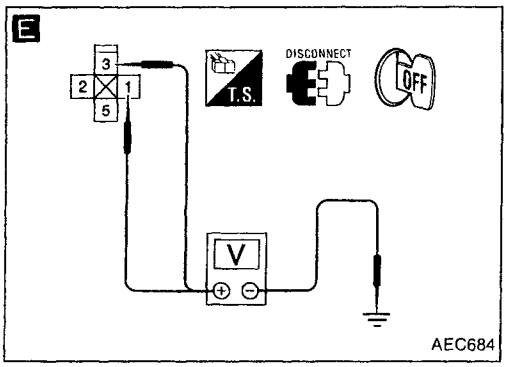

AEC684

F

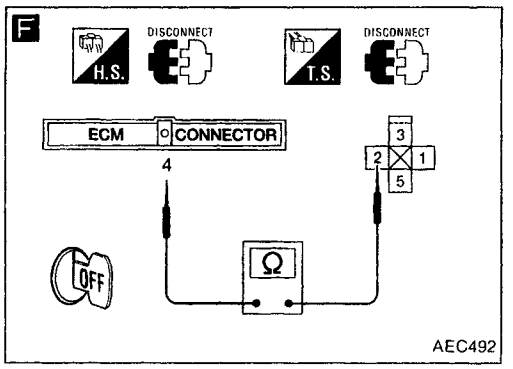

AEC492

G

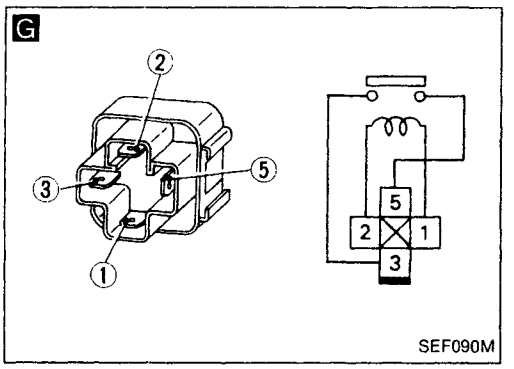

SEF090M

H

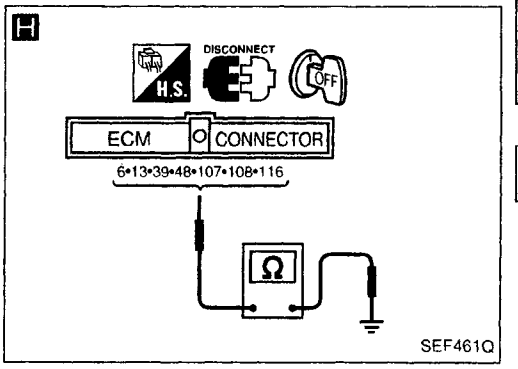

SEF461Q

Ⓐ

D **CHECK HARNESS CONTINUITY BETWEEN ECCS RELAY AND ECM**
1. Disconnect ECM harness connector.
2. Disconnect ECCS relay harness connector.
3. Check harness continuity between ECM terminals (38), (47) and terminal (5).

Continuity should exist.
If OK, check harness for short.

NG → Repair harness or connectors.

OK ↓

E **CHECK VOLTAGE BETWEEN ECCS RELAY AND GROUND.**
Check voltage between terminals (1), (3) and ground with CONSULT or tester.
Voltage: Battery voltage

NG → Check the following.
- Harness connectors (F4), (M4D)
- Harness connectors (M8), (E101)
- Harness for open or short between ECCS relay and battery

If NG, repair harness or connectors.

OK ↓

F **CHECK OUTPUT SIGNAL CIRCUIT.**
Check harness continuity between ECM terminal (4) and terminal (2).
Continuity should exist.
If OK, check harness for short.

NG → Repair harness or connectors.

OK ↓

G **CHECK ECCS RELAY.**
1. Apply 12V direct current between relay terminals (1) and (2).
2. Check continuity between relay terminals (3) and (5).

12V ((1) - (2)) applied:
Continuity exists.
No voltage applied:
No continuity

NG → Replace ECCS relay.

OK ↓

H **CHECK GROUND CIRCUIT.**
1. Turn ignition switch "OFF".
2. Loosen and retighten engine ground screws.
3. Disconnect ECM harness connector.
4. Check harness continuity between ECM terminals (6), (13), (39), (48), (107), (108), (116) and engine ground.

Continuity should exist.
If OK, check harness for short.

NG → Repair harness or connectors.

OK ↓

Check ECM pin terminals for damage and check the connection of ECM harness connector.

↓

INSPECTION END

Simpo PDF Merge and Split Unregistered Version - http://www.simpopdf.com

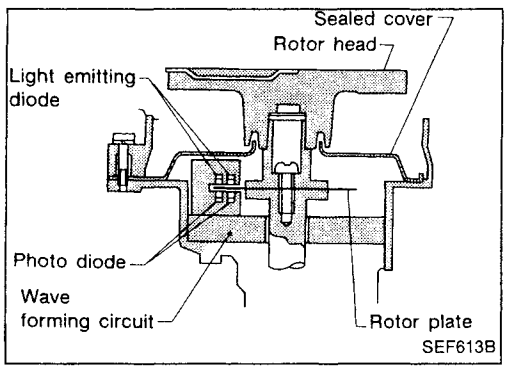

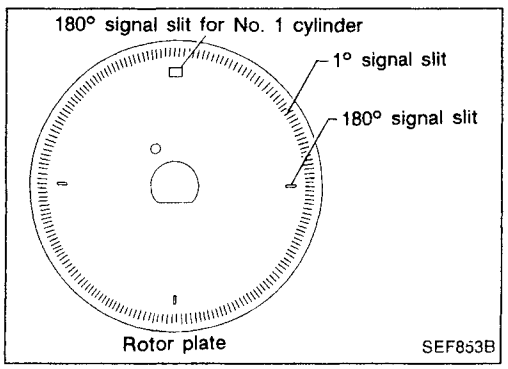

Camshaft Position Sensor (CMPS)

The camshaft position sensor is a basic component of the ECCS. It monitors engine speed and piston position. These input signals to the ECM are used to control fuel injection, ignition timing and other functions.

The camshaft position sensor has a rotor plate and a wave-forming circuit. The rotor plate has 360 slits for a 1° (POS) signal and 4 slits for a 180° (REF) signal. The wave-forming circuit consists of Light Emitting Diodes (LED) and photo diodes.

The rotor plate is positioned between the LED and the photo diode. The LED transmits light to the photo diode. As the rotor plate turns, the slits cut the light to generate rough-shaped pulses. These pulses are converted into on-off signals by the wave-forming circuit and sent to the ECM.

EC

Diagnostic Trouble Code No.	Malfunction is detected when	Check Items (Possible Cause)
11	• Either 1° or 180° signal is not sent to ECM for the first few seconds during engine cranking. • Either 1° or 180° signal is not sent to ECM often enough while the engine speed is higher than the specified engine speed. • The relation between 1° and 180° signal is not in the normal range during the specified engine speed.	• Harness or connectors (The camshaft position sensor circuit is open or shorted.) • Camshaft position sensor • Starter motor (Refer to EL section.) • Starting system circuit (Refer to EL section.) • Dead (Weak) battery

DIAGNOSTIC TROUBLE CODE CONFIRMATION PROCEDURE

1) Turn ignition switch "ON" and select "DATA MONITOR" mode with CONSULT.
2) Start engine and run it for at least 2 seconds at idle speed.

OR

1) Start engine and run it for at least 2 seconds at idle speed.
2) Turn ignition switch "OFF", wait at least 7 seconds and then turn "ON".
3) Perform "Diagnostic Test Mode II" (Self-diagnostic results) with ECM.

Simpo PDF Merge and Split Unregistered Version - http://www.simpopdf.com

Camshaft Position Sensor (CMPS) (Cont'd)

EC-CMPS-01

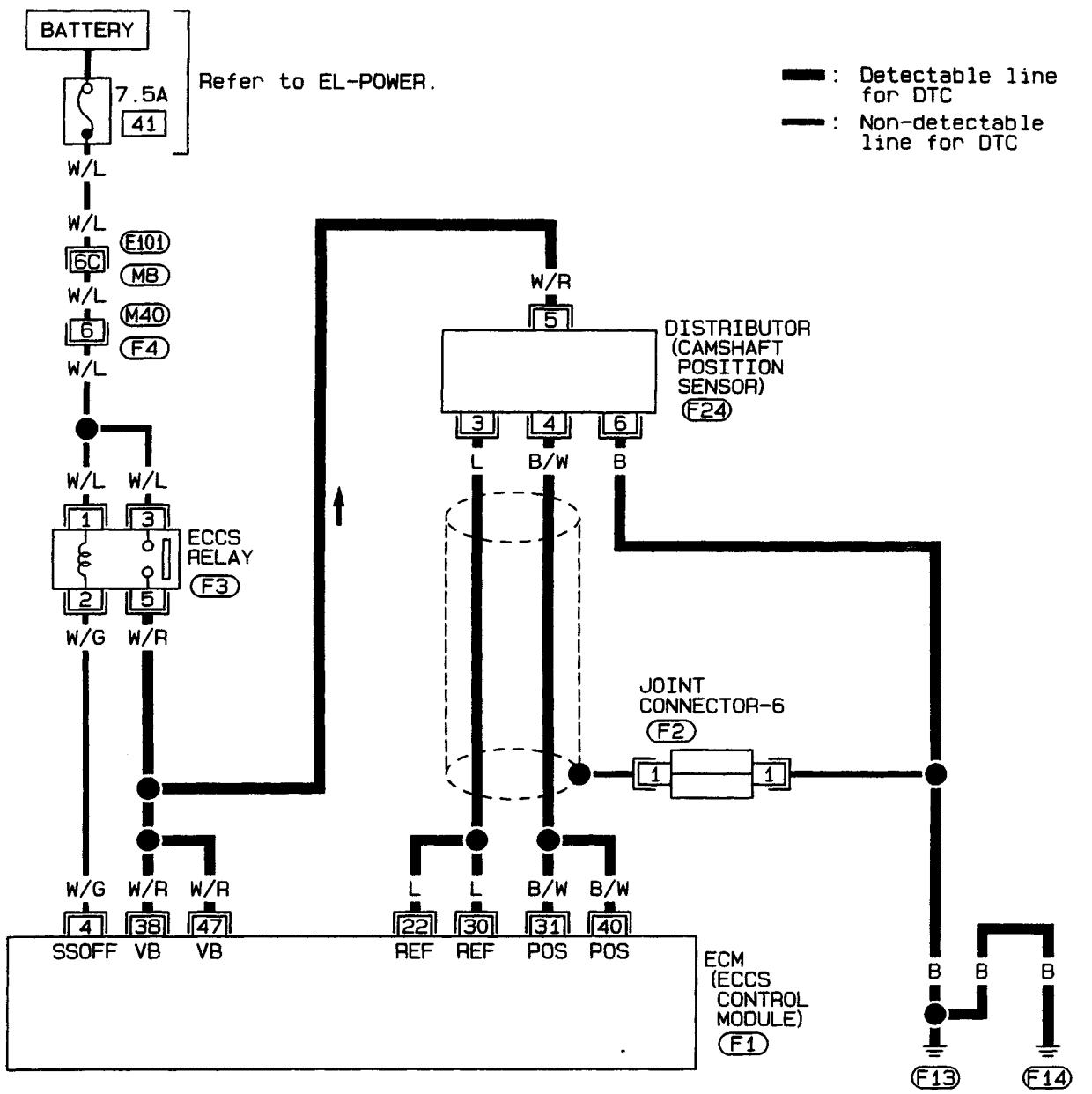



Refer to last page (Foldout page).
M8, E101

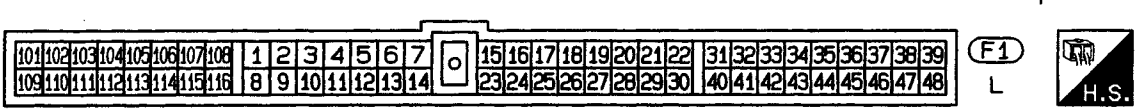

HEC003

Simpo PDF Merge and Split Unregistered Version - http://www.simpopdf.com

Camshaft Position Sensor (CMPS) (Cont'd)

DIAGNOSTIC PROCEDURE (DETECTABLE CIRCUIT)

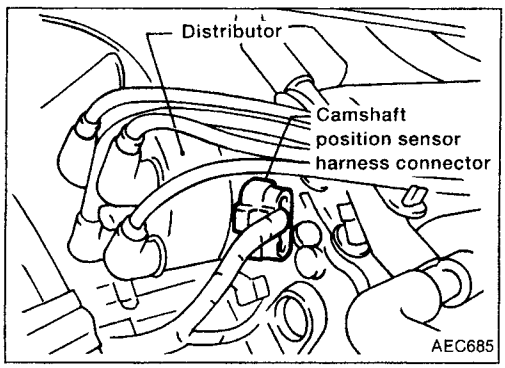

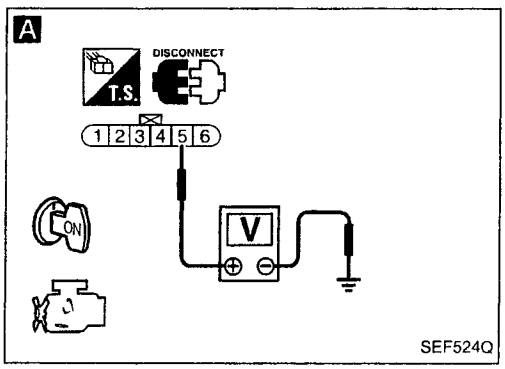

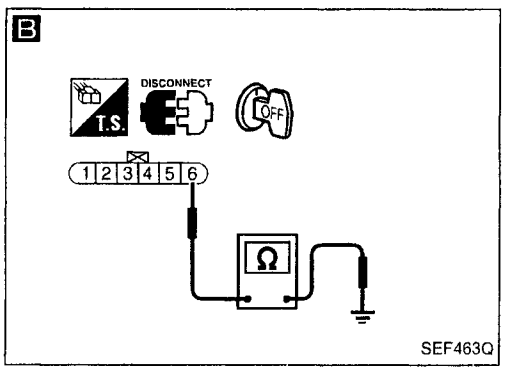

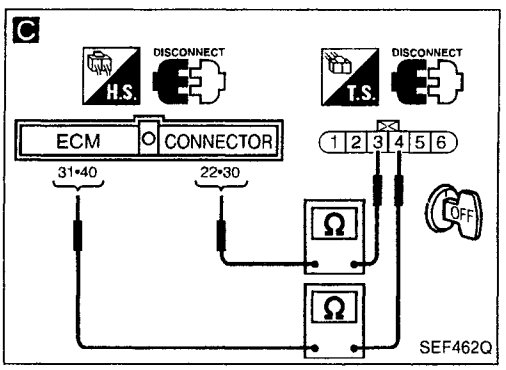

INSPECTION START

A

CHECK POWER SUPPLY.
1. Turn ignition switch "OFF".
2. Disconnect camshaft position sensor harness connector.
3. Turn ignition switch "ON".
4. Check voltage between terminal ⑤ and ground with CONSULT or tester.

Voltage: Battery voltage

NG → Check the following.
- Harness for open or short between camshaft position sensor and ECCS relay

If NG, repair harness or connectors.

OK ↓

B

CHECK GROUND CIRCUIT.
1. Turn ignition switch "OFF".
2. Loosen and retighten engine ground screws.
3. Check harness continuity between terminal ⑥ and engine ground.

Continuity should exist.

If OK, check harness for short.

NG → Repair harness or connector.

OK ↓

C

CHECK INPUT SIGNAL CIRCUIT.
1. Disconnect ECM harness connector.
2. Check harness continuity between terminal ④ and ECM terminals ㉛, ㊵, terminal ③ and ECM terminals ㉒, ㉚.

Continuity should exist.

If OK, check harness for short.

NG → Repair harness or connectors.

OK ↓

CHECK COMPONENT (Camshaft position sensor).
Refer to "COMPONENT INSPECTION" on next page.

NG → Replace camshaft position sensor.

OK ↓

Disconnect and reconnect harness connectors in the circuit. Then retest.

Trouble is not fixed. ↓

Check ECM pin terminals for damage and check the connection of ECM harness connector. Reconnect ECM harness connector and retest.

INSPECTION END

EC

Simpo PDF Merge and Split Unregistered Version - http://www.simpopdf.com

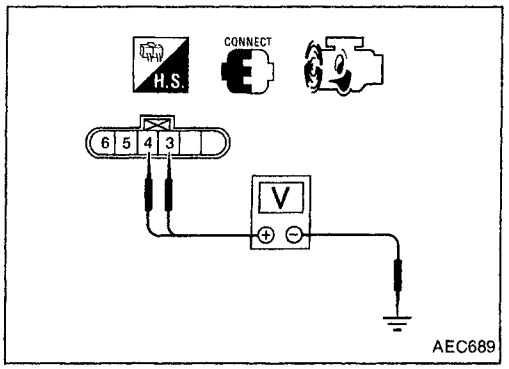

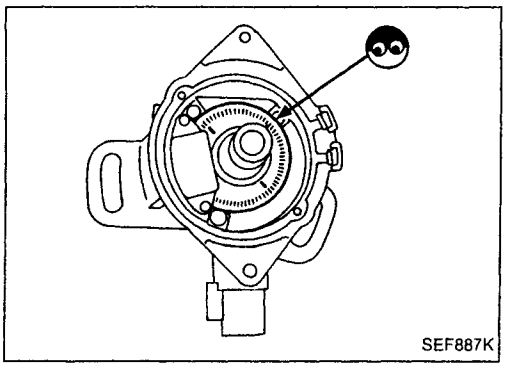

Camshaft Position Sensor (CMPS) (Cont'd)

COMPONENT INSPECTION

Camshaft position sensor

1. Start engine.
2. Check voltage between camshaft position sensor terminals ③, ④ and ground with AC range.

Condition	Terminal	Voltage (AC range)
Engine running at idle	③ and ground ④ and ground	Approximately 2.7V*

*: Average voltage for pulse signal (Actual pulse signal can be confirmed by oscilloscope.)

3. If NG, replace distributor assembly with camshaft position sensor.
4. Remove distributor cap. Visually check signal plate for damage or dust.

After this inspection, diagnostic trouble code No. 11 might be displayed with camshaft position sensor functioning properly. Erase the stored memory.

Simpo PDF Merge and Split Unregistered Version - http://www.simpopdf.com

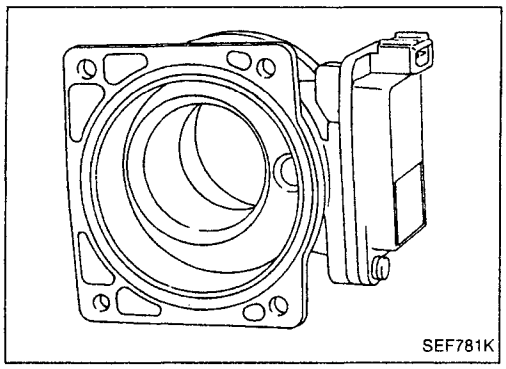
SEF781K

Mass Air Flow Sensor (MAFS)

The mass air flow sensor is placed in the stream of intake air. It measures the intake flow rate by measuring a part of the entire intake flow. It consists of a hot wire that is supplied with electric current from the ECM. The temperature of the hot wire is controlled by the ECM a certain amount. The heat generated by the hot wire is reduced as the intake air flows around it. The more air, the greater the heat loss.
Therefore, the ECM must supply more electric current to maintain the temperature of the hot wire as air flow increases. The ECM detects the air flow by means of this current change.

EC

Diagnostic Trouble Code No.	Malfunction is detected when ...	Check Items (Possible Cause)
12	• An excessively high or low voltage from the sensor is sent to ECM.	• Harness or connectors (The sensor circuit is open or shorted.) • Mass air flow sensor

DIAGNOSTIC TROUBLE CODE CONFIRMATION PROCEDURE

1) Turn ignition switch "ON", and wait at least 6 seconds.
2) Select "DATA MONITOR" mode with CONSULT.
3) Start engine and wait at least 3 seconds.

OR

1) Turn ignition switch "ON", and wait at least 6 seconds.
2) Start engine and wait at least 3 seconds.
3) Turn ignition switch "OFF", wait at least 7 seconds and then turn "ON".
4) Perform "Diagnostic Test Mode II" (Self-diagnostic results) with ECM.

Simpo PDF Merge and Split Unregistered Version - http://www.simpopdf.com

Mass Air Flow Sensor (MAFS) (Cont'd)

EC-MAFS-01

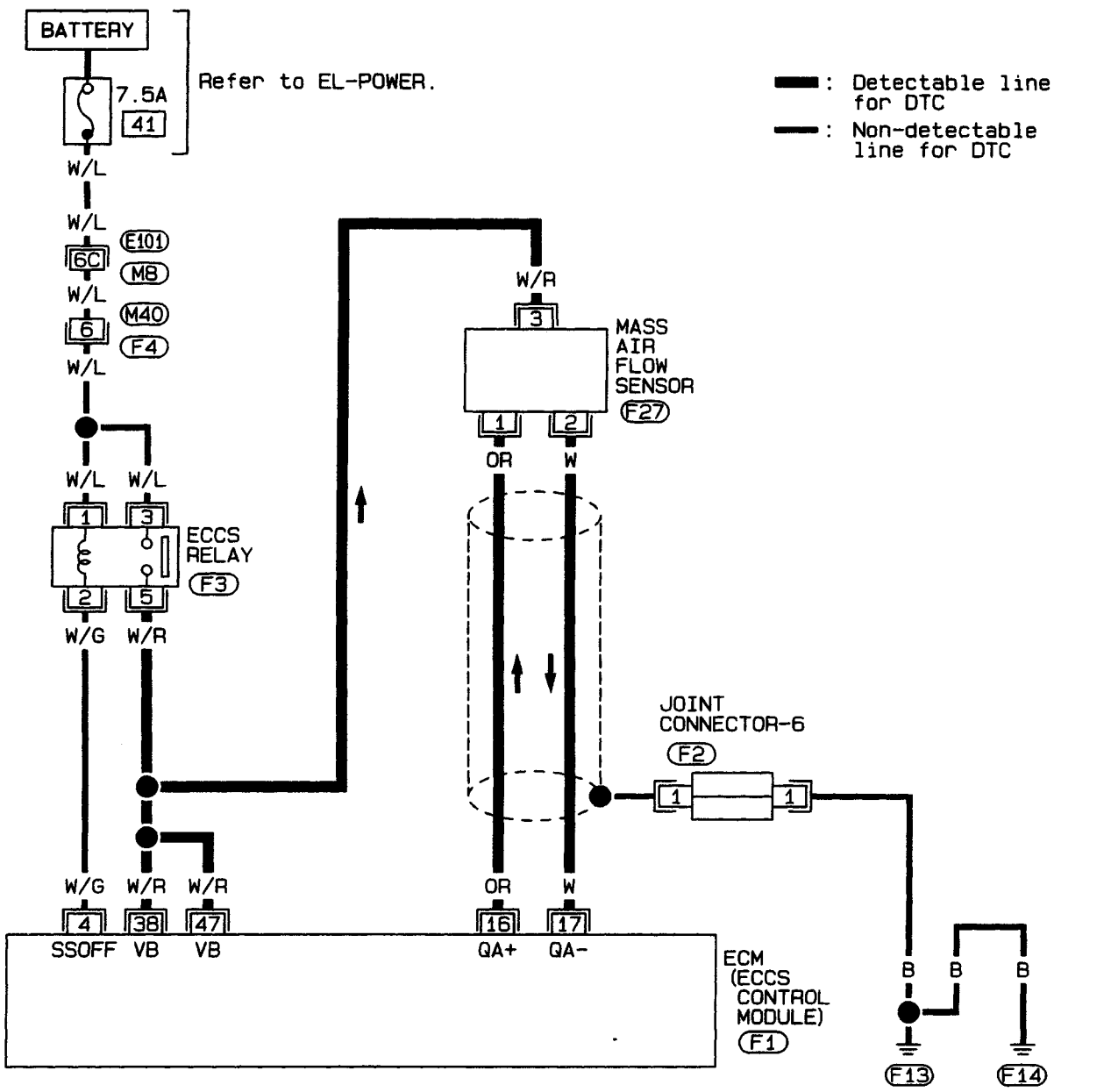

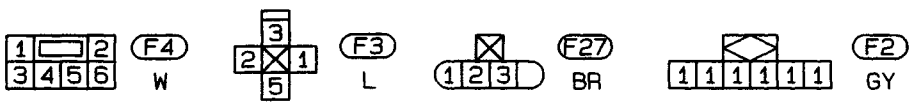

Refer to last page (Foldout page).

M8, E101

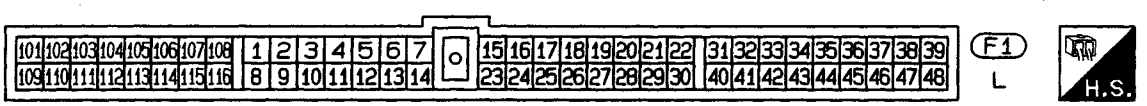

HEC004

Simpo PDF Merge and Split Unregistered Version - http://www.simpopdf.com

Mass Air Flow Sensor (MAFS) (Cont'd)

DIAGNOSTIC PROCEDURE

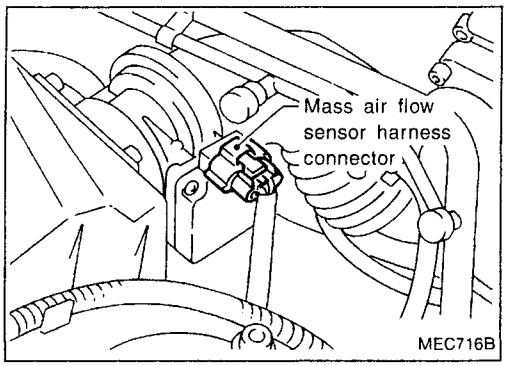

INSPECTION START

A

CHECK POWER SUPPLY.
1. Turn ignition switch "OFF".
2. Disconnect mass air flow sensor harness connector.
3. Turn ignition switch "ON".
4. Check voltage between terminal ③ and ground with CONSULT or tester.

Voltage: Battery positive voltage

NG → Repair harness or connectors.

OK

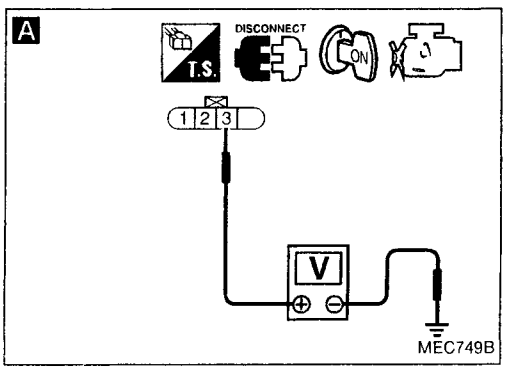

B

CHECK GROUND CIRCUIT.
1. Turn ignition switch "OFF".
2. Disconnect ECM harness connector.
3. Loosen and retighten engine ground screws.
4. Check harness continuity between terminal ② and ECM terminal ⑰.

Continuity should exist.
If OK, check harness for short.

NG → Repair harness or connectors.

OK

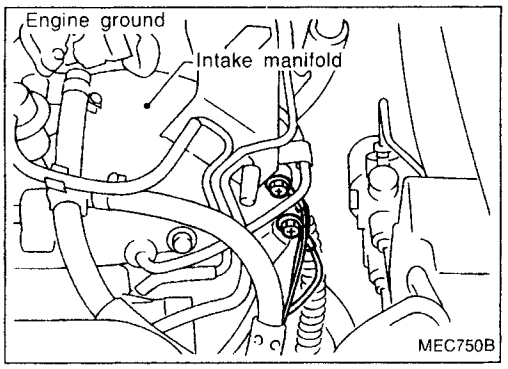

C

CHECK INPUT SIGNAL CIRCUIT.
Check harness continuity between terminal ① and ECM terminal ⑯.

Continuity should exist.
If OK, check harness for short.

NG → Repair harness or connectors.

OK

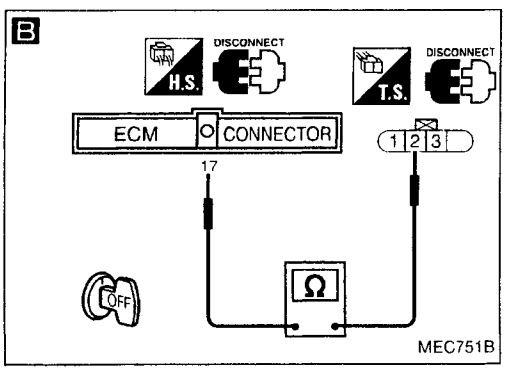

CHECK COMPONENT
(Mass air flow sensor).
Refer to "COMPONENT INSPECTION" on next page.

NG → Replace mass air flow sensor.

OK

Disconnect and reconnect harness connectors in the circuits. Then retest.

Trouble is not fixed.

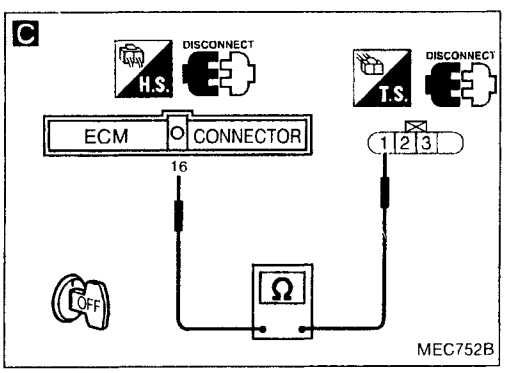

Check ECM pin terminals for damage and check the connection of ECM harness connector. Reconnect ECM harness connector and retest.

INSPECTION END

EC

Simpo PDF Merge and Split Unregistered Version - http://www.simpopdf.com

Mass Air Flow Sensor (MAFS) (Cont'd)

COMPONENT INSPECTION

Mass air flow sensor

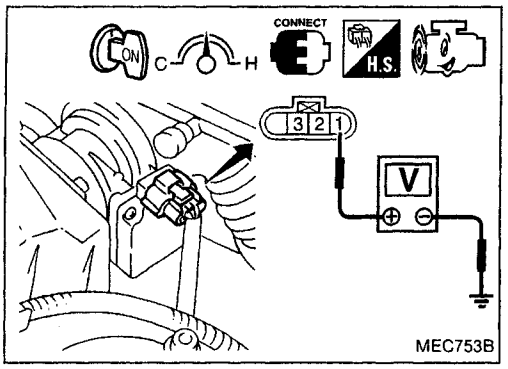

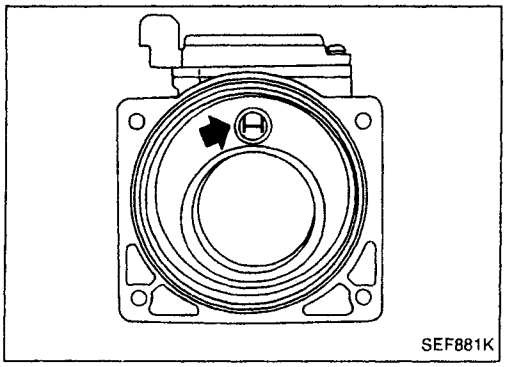

1. Turn ignition switch "ON".
2. Start engine and warm it up sufficiently.
3. Check voltage between terminal ① and ground.

Conditions	Voltage V
Ignition switch "ON" (Engine stopped.)	Less than 1.0
Idle (Engine is warmed-up sufficiently.)	1.3 - 1.7

4. If NG, remove mass air flow sensor from air duct. Check hot wire for damage or dust.

Simpo PDF Merge and Split Unregistered Version - http://www.simpopdf.com

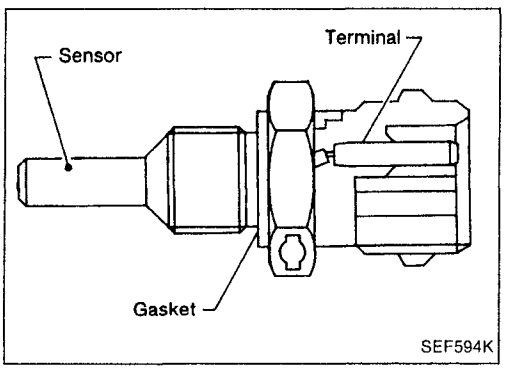

Engine Coolant Temperature Sensor (ECTS)

The engine coolant temperature sensor is used to detect the engine coolant temperature. The sensor modifies a voltage signal from the ECM. The modified signal returns to the ECM as the engine coolant temperature input. The sensor uses a thermistor which is sensitive to the change in temperature. The electrical resistance of the thermistor decreases as temperature increases.

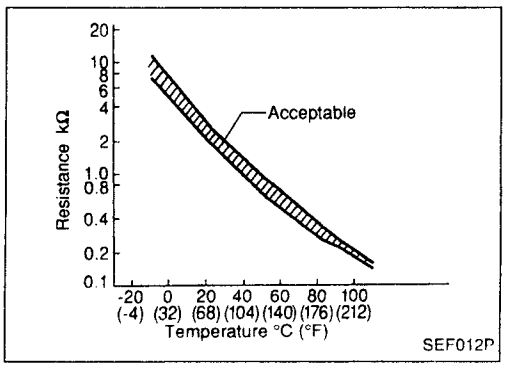

<Reference data>

Engine coolant temperature °C (°F)	Voltage (V)	Resistance (kΩ)
–10 (14)	4.4	7.0 - 11.4
20 (68)	3.5	2.1 - 2.9
50 (122)	2.2	0.68 - 1.00
90 (194)	0.9	0.236 - 0.260

EC

Diagnostic Trouble Code No.	Malfunction is detected when ...	Check Items (Possible Cause)
13	• An excessively high or low voltage from the sensor is sent to ECM.	• Harness or connectors (The sensor circuit is open or shorted.) • Engine coolant temperature sensor

DIAGNOSTIC TROUBLE CODE CONFIRMATION PROCEDURE

1) Turn ignition switch "ON".
2) Select "DATA MONITOR" mode with CONSULT.
3) Wait at least 5 seconds.

OR

1) Turn ignition switch "ON" and wait at least 5 seconds.
2) Turn ignition switch "OFF", wait at least 7 seconds and then turn "ON".
3) Perform "Diagnostic Test Mode II" (Self-diagnostic results) with ECM.

Simpo PDF Merge and Split Unregistered Version - http://www.simpopdf.com

Engine Coolant Temperature Sensor (ECTS) (Cont'd)

EC-ECTS-01

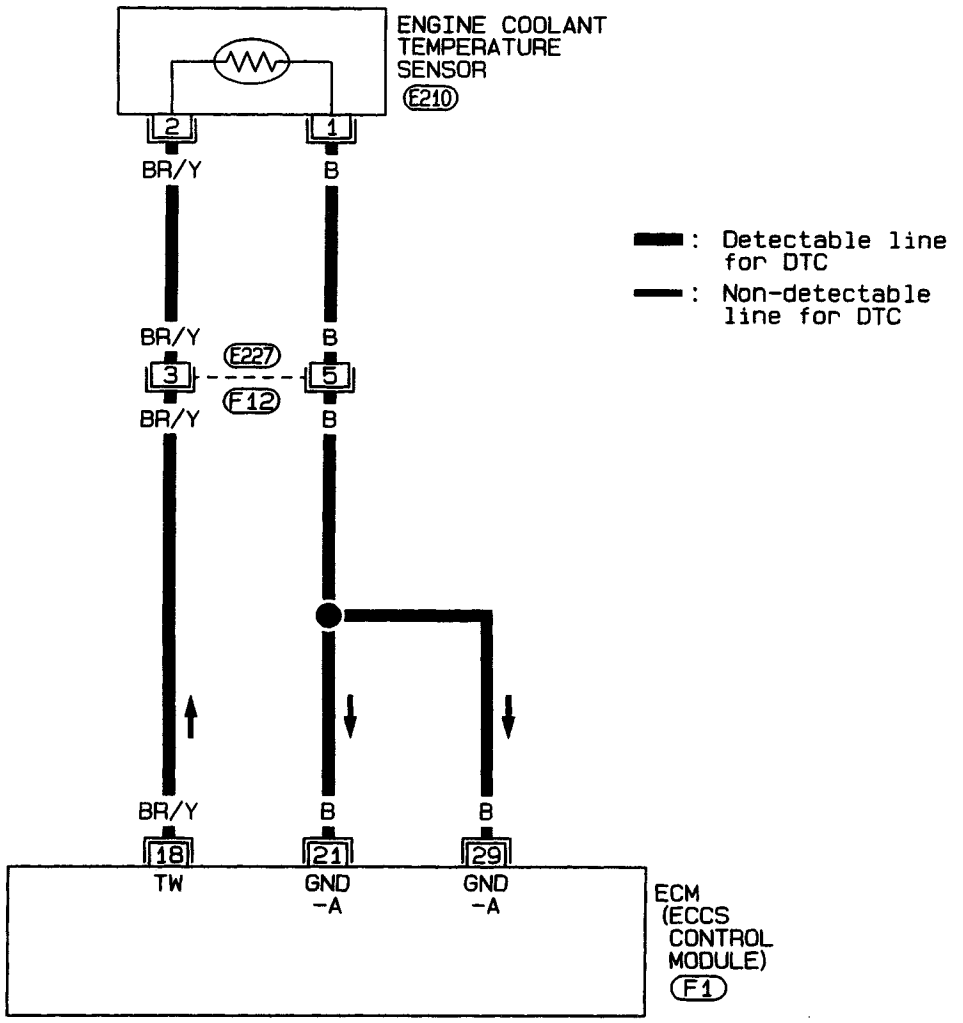

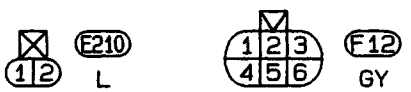

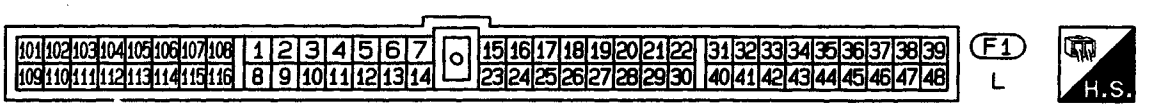

HEC005

Simpo PDF Merge and Split Unregistered Version - http://www.simpopdf.com

Engine Coolant Temperature Sensor (ECTS) (Cont'd)

DIAGNOSTIC PROCEDURE

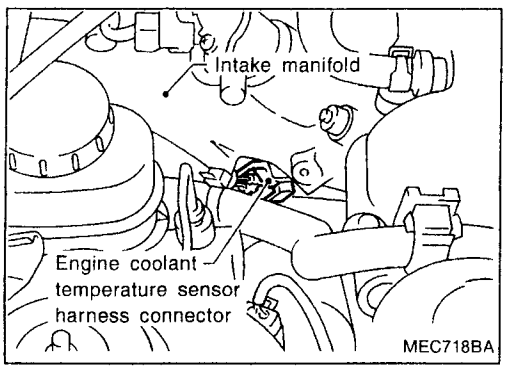

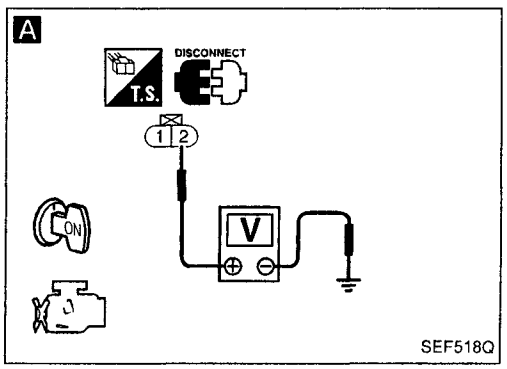

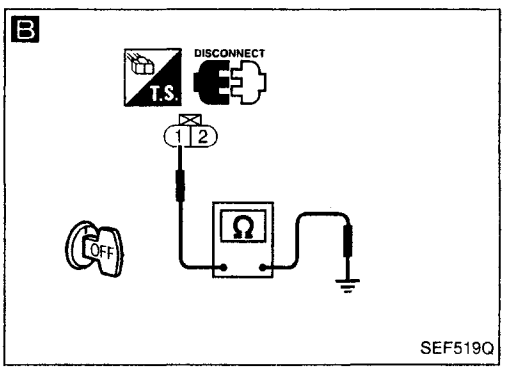

INSPECTION START

A

CHECK POWER SUPPLY.
1. Turn ignition switch "OFF".
2. Disconnect engine coolant temperature sensor harness connector.
3. Turn ignition switch "ON".
4. Check voltage between terminal ② and ground with CONSULT or tester.

Voltage:
Approximately 5V

NG → Check the following.
- Harness for open or short between ECM and engine coolant temperature sensor
- Harness connectors (E227), (F12)

If NG, repair harness or connectors.

OK ↓

B

CHECK GROUND CIRCUIT.
1. Turn ignition switch "OFF".
2. Check harness continuity between terminal ① and engine ground.

Continuity should exist.
If OK, check harness for short.

NG → Check the following.
- Harness for open or short between ECM and engine coolant temperature sensor
- Harness connectors (E227), (F12)

If NG, repair harness or connectors.

OK ↓

CHECK COMPONENT (Engine coolant temperature sensor). Refer to "COMPONENT INSPECTION" on next page.

NG → Replace engine coolant temperature sensor.

OK ↓

Disconnect and reconnect harness connectors in the circuits. Then retest.

Trouble is not fixed. ↓

Check ECM pin terminals for damage and check the connection of ECM harness connector. Reconnect ECM harness connector and retest.

INSPECTION END

EC

Simpo PDF Merge and Split Unregistered Version - http://www.simpopdf.com

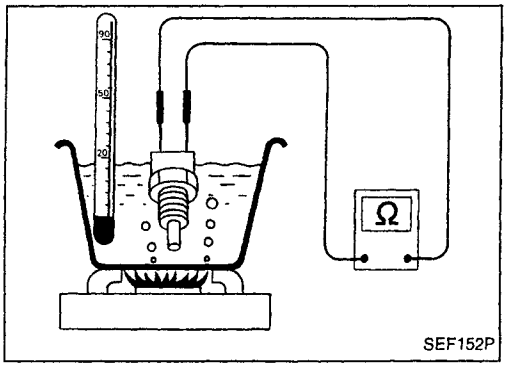

Engine Coolant Temperature Sensor (ECTS) (Cont'd)

COMPONENT INSPECTION

Engine coolant temperature sensor

Check resistance as shown in the figure.

Temperature °C (°F)	Resistance kΩ
20 (68)	2.1 - 2.9
50 (122)	0.68 - 1.00
90 (194)	0.236 - 0.260

If NG, replace engine coolant temperature sensor.

Simpo PDF Merge and Split Unregistered Version - http://www.simpopdf.com

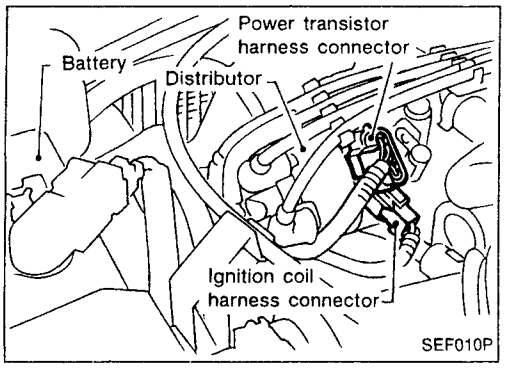

Ignition Signal

COMPONENT DESCRIPTION

Ignition coil & power transistor (Built into distributor)

The ignition coil is a small molded type. The ignition signal from the ECM is sent to the power transistor. The power transistor switches on and off the ignition coil primary circuit. As the primary circuit is turned on and off, the proper high voltage is induced in the coil secondary circuit.

EC

Diagnostic Trouble Code No.	Malfunction is detected when ...	Check Items (Possible Cause)
21	• The ignition signal in the primary circuit is not sent to ECM during engine cranking or running.	• Harness or connectors (The ignition primary circuit is open or shorted.) • Power transistor unit. • Resistor • Camshaft position sensor • Camshaft position sensor circuit

DIAGNOSTIC TROUBLE CODE CONFIRMATION PROCEDURE

Note: If both DTC 11 and 21 are displayed, perform TROUBLE DIAGNOSIS FOR DTC 11 first. Refer to EC-289.

1) Turn ignition switch "ON".
2) Select "DATA MONITOR" mode with CONSULT.
3) Start engine. (If engine does not run, turn ignition switch to "START" for at least 5 seconds.)

OR

1) Turn ignition switch "ON".
2) Start engine. (If engine does not run, turn ignition switch to "START" for at least 5 seconds.)
3) Turn ignition switch "OFF", wait at least 7 seconds and then turn "ON".
4) Perform "Diagnostic Test Mode II" (Self-diagnostic results) with ECM.

Simpo PDF Merge and Split Unregistered Version - http://www.simpopdf.com

Ignition Signal (Cont'd)

EC-IGN/SG-01

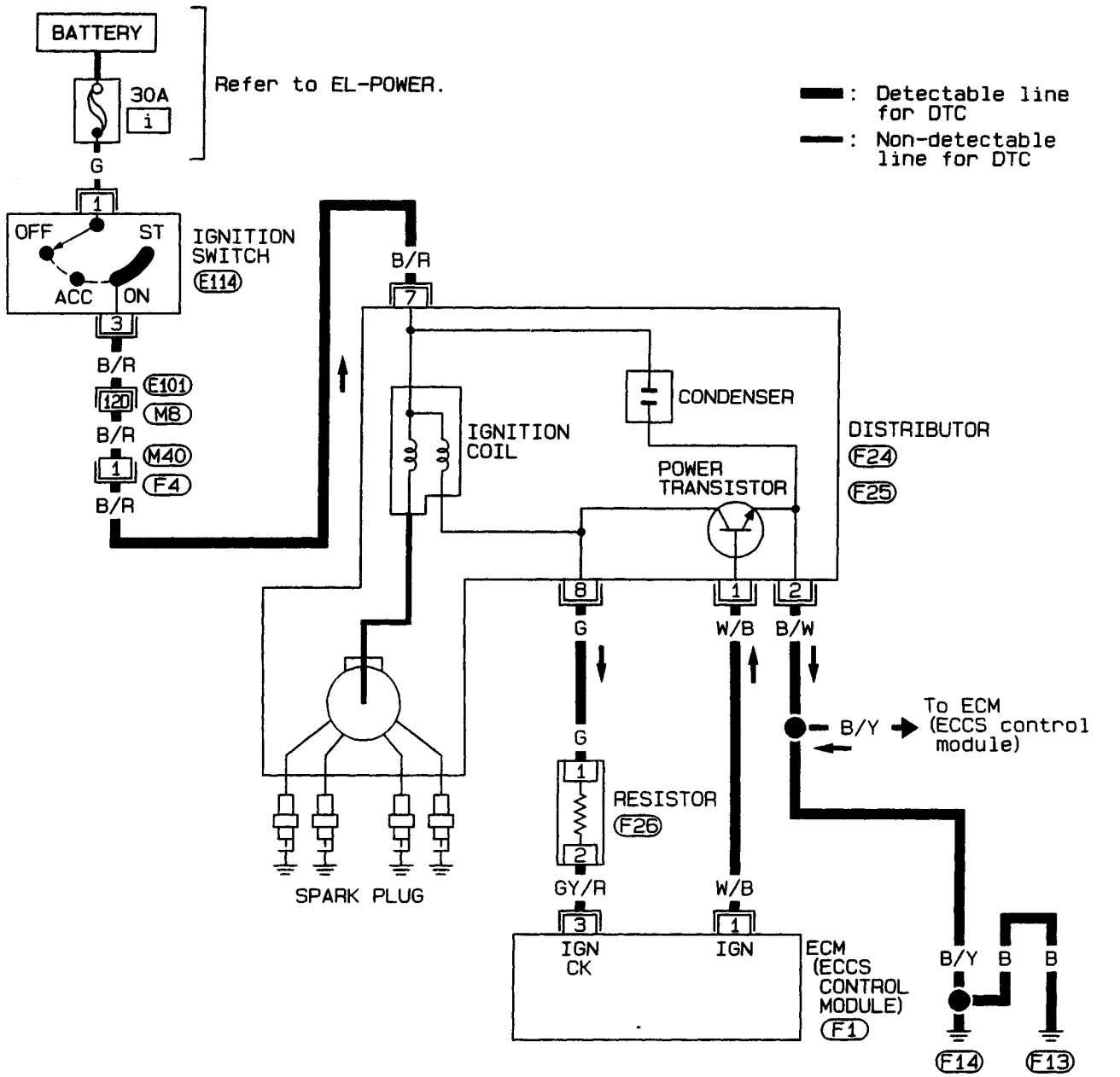

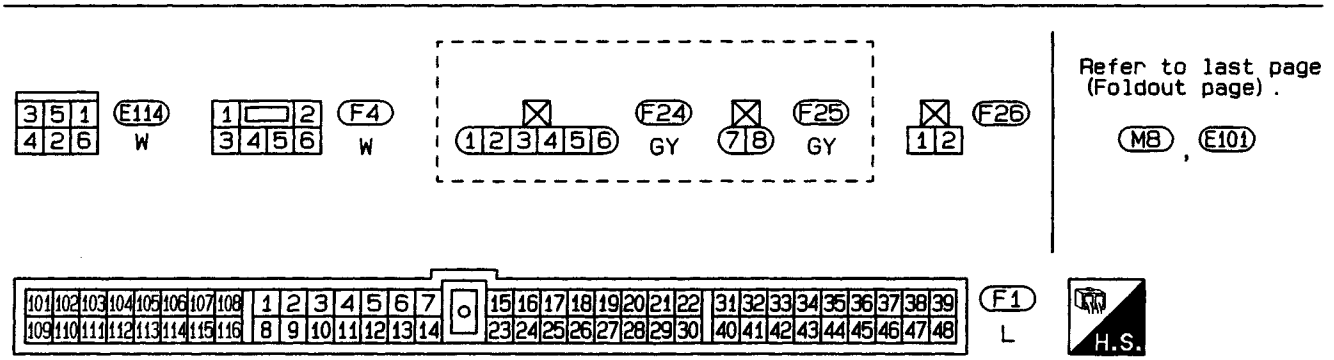

HEC006

Simpo PDF Merge and Split Unregistered Version - http://www.simpopdf.com

Ignition Signal (Cont'd)

DIAGNOSTIC PROCEDURE

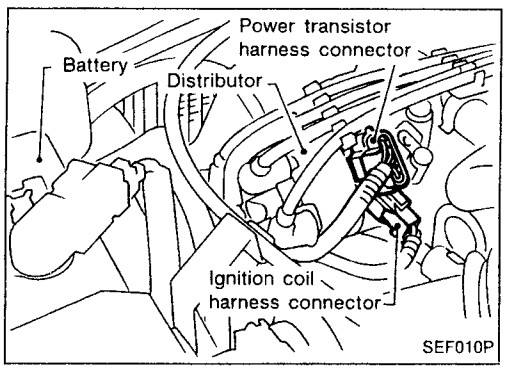

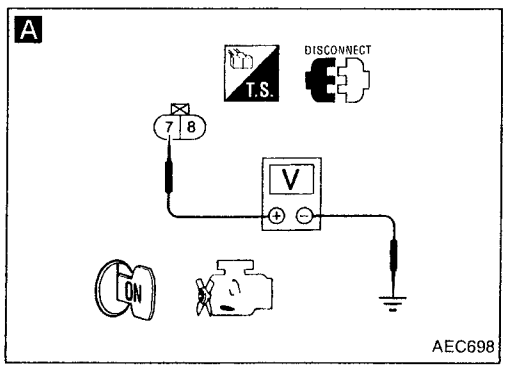

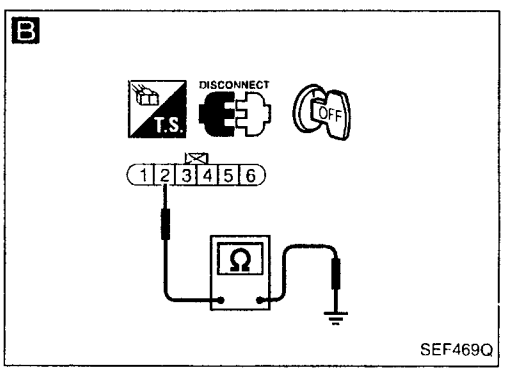

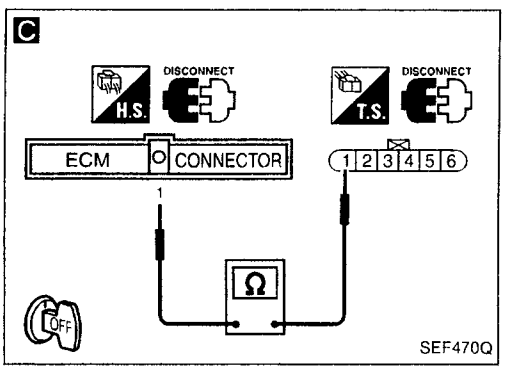

INSPECTION START

Turn ignition switch "OFF", and restart engine.
Is engine running?

Yes → Ⓐ

No

A

CHECK POWER SUPPLY.
1. Turn ignition switch "OFF".
2. Disconnect ignition coil harness connector.
3. Turn ignition switch "ON".
4. Check voltage between terminal ⑦ and ground with CONSULT or tester.
   Voltage: Battery voltage

NG → Check the following.
- Harness connectors (F4), (M40)
- Harness connectors (M8), (E101)
- Harness for open or short between ignition coil and ignition switch

If NG, repair harness or connectors.

OK

B

CHECK GROUND CIRCUIT.
1. Turn ignition switch "OFF".
2. Disconnect power transistor harness connector.
3. Check harness continuity between terminal ② and engine ground.
   Continuity should exist.
   If OK, check harness for short.

NG → Repair harness or connectors.

OK

C

CHECK INPUT SIGNAL CIRCUIT.
1. Disconnect ECM harness connector.
2. Check harness continuity between ECM terminal ① and power transistor terminal ①.
   Continuity should exist.
   If OK, check harness for short.

NG → Repair harness or connectors.

OK

CHECK COMPONENTS (Ignition coil, power transistor).
Refer to "COMPONENT INSPECTION", EC-305.

NG → Replace malfunctioning component(s).

OK

Disconnect and reconnect harness connectors in the circuit. Then retest.

Trouble is not fixed.

Check ECM pin terminals for damage and check the connection of ECM harness connector. Reconnect ECM harness connector and retest.

INSPECTION END

EC

Simpo PDF Merge and Split Unregistered Version - http://www.simpopdf.com

Ignition Signal (Cont'd)

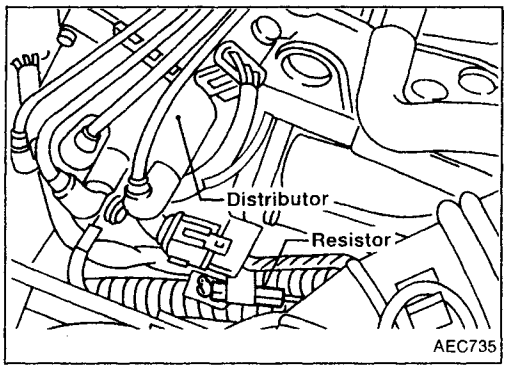

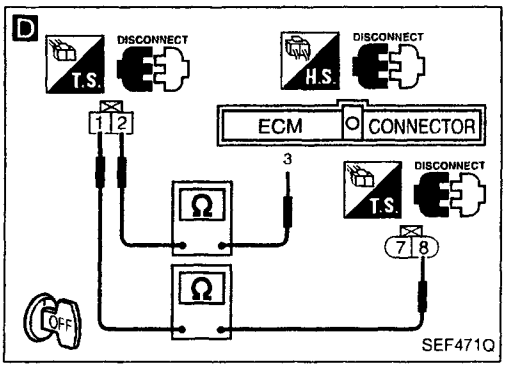

Ⓐ

D

CHECK INPUT SIGNAL CIRCUIT.
1. Stop engine.
2. Disconnect ignition coil harness connector.
3. Strip tape covering resistor.
4. Disconnect ECM harness connector.
5. Check harness continuity between ignition coil terminal ⑧ and resistor terminal ①, resistor terminal ② and ECM terminal ③.
   Continuity should exist.
   If OK, check harness for short.

NG → Repair harness or connectors.

OK ↓

CHECK COMPONENT (Resistor).
Refer to "COMPONENT INSPECTION" on next page.

NG → Replace resistor.

OK ↓

Disconnect and reconnect harness connectors in the circuit. Then retest.

Trouble is not fixed. ↓

Check ECM pin terminals for damage and check the connection of ECM harness connector. Reconnect ECM harness connector and retest.

↓

INSPECTION END

Simpo PDF Merge and Split Unregistered Version - http://www.simpopdf.com

Ignition Signal (Cont'd)

COMPONENT INSPECTION

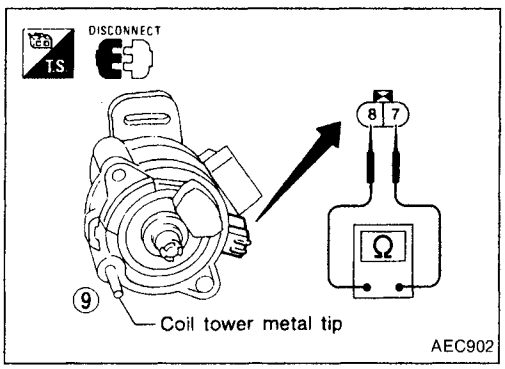

Ignition coil

1. Disconnect ignition coil harness connector.
2. Check resistance as shown in the figure.

Terminal	Resistance [at 25°C (77°F)]
⑦ - ⑧ (Primary coil)	0.5 - 1.0Ω
⑦ - ⑨ (Secondary coil)	Approximately 25 kΩ

For checking secondary coil, remove distributor cap and measure resistance between coil tower metal tip ⑨ and terminal ⑦.
If NG, replace distributor assembly as a unit.

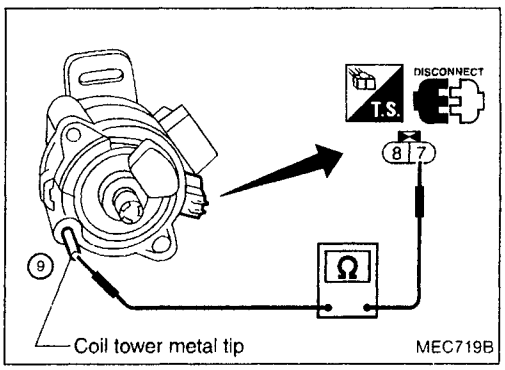

Power transistor

1. Disconnect camshaft position sensor & power transistor harness connector and ignition coil harness connector.
2. Check power transistor resistance between terminals ② and ⑧.

Terminals	Resistance	Result
② and ⑧	Not 0Ω	OK
	0Ω	NG

If NG, replace distributor assembly.

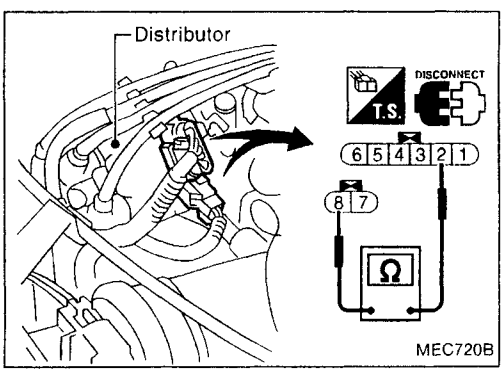

Resistor

1. Disconnect resistor harness connector.
2. Check resistance between terminals ① and ②
   Resistance: Approximately 2.2 kΩ [at 25°C (77°F)]

If NG, replace resistor.

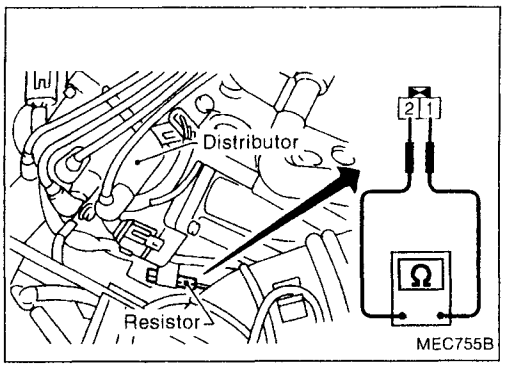

EC

Simpo PDF Merge and Split Unregistered Version - http://www.simpopdf.com

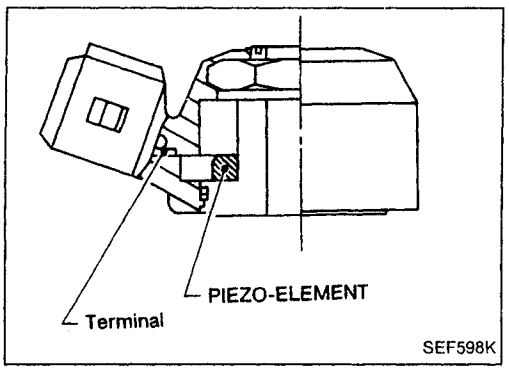

Knock Sensor (KS)

The knock sensor is attached to the cylinder block. It senses engine knocking using a piezoelectric element. A knocking vibration from the cylinder block is sensed as vibrational pressure. This pressure is converted into a voltage signal and sent to the ECM.

Diagnostic Trouble Code No.	Malfunction is detected when	Check Items (Possible Cause)
34	• An excessively low or high voltage from the knock sensor is sent to ECM.	• Harness or connectors (The knock sensor circuit is open or shorted.) • Knock sensor

DIAGNOSTIC TROUBLE CODE CONFIRMATION PROCEDURE

1) Turn ignition switch "ON" and select "DATA MONITOR" mode with CONSULT.
2) Start engine and run it for at least 5 seconds at idle speed.

OR

1) Start engine and run it for at least 5 seconds at idle speed.
2) Turn ignition switch "OFF", wait at least 7 seconds and then turn "ON".
3) Perform "Diagnostic Test Mode II" (Self-diagnostic results) with ECM.

Simpo PDF Merge and Split Unregistered Version - http://www.simpopdf.com

Knock Sensor (KS) (Cont'd)

EC-KS-01

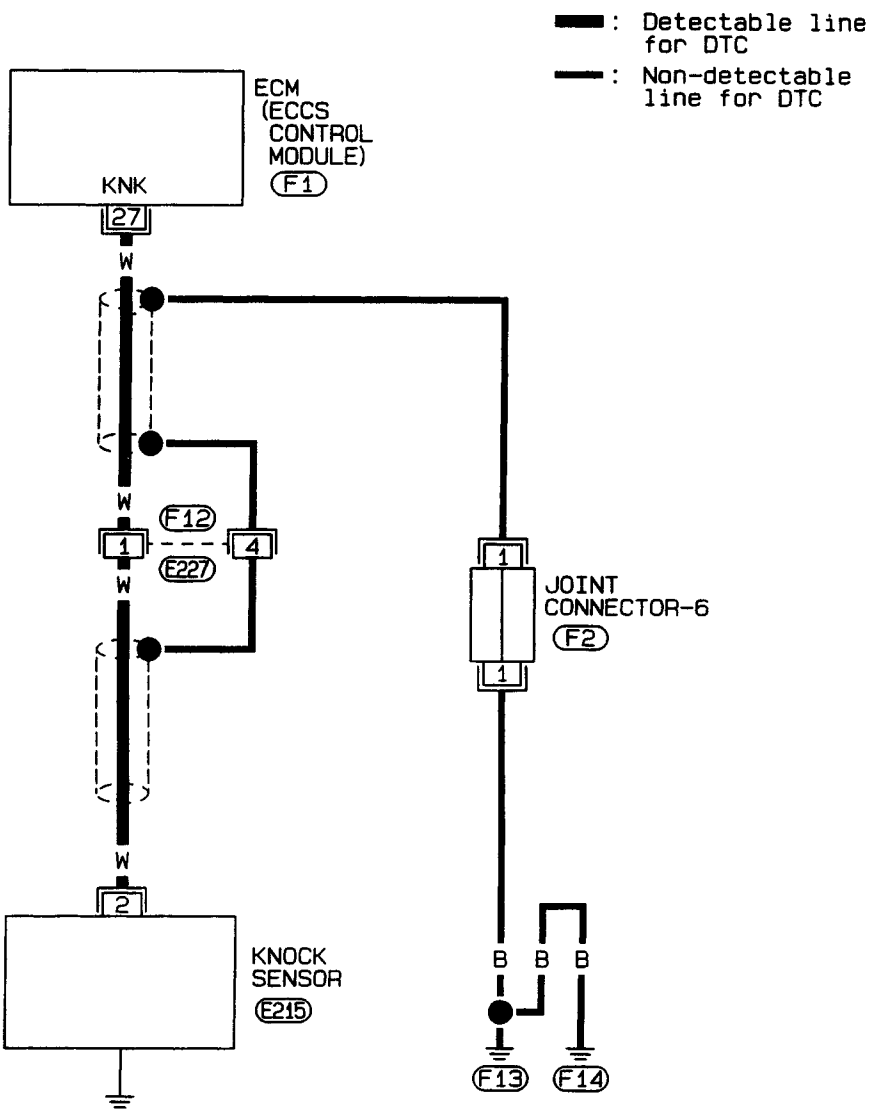

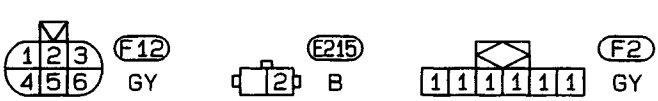

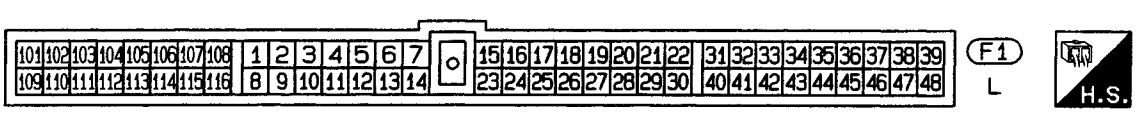

HEC007

Simpo PDF Merge and Split Unregistered Version - http://www.simpopdf.com

Knock Sensor (KS) (Cont'd)

DIAGNOSTIC PROCEDURE

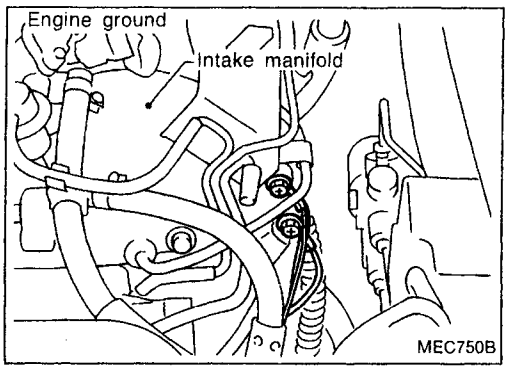

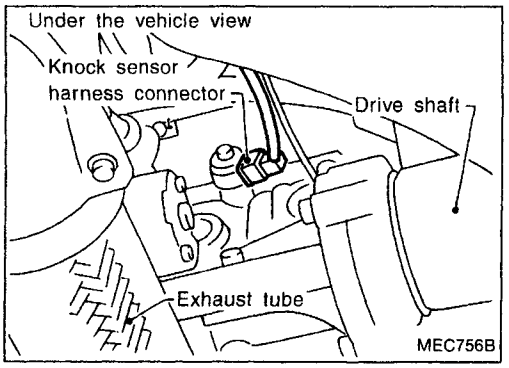

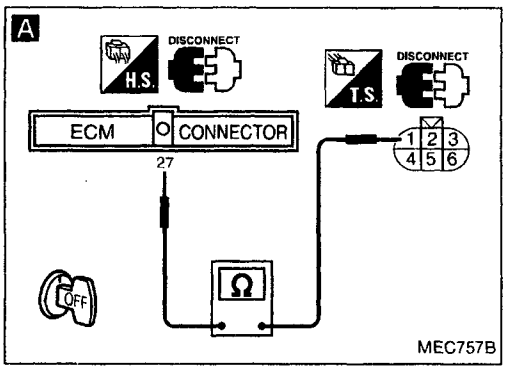

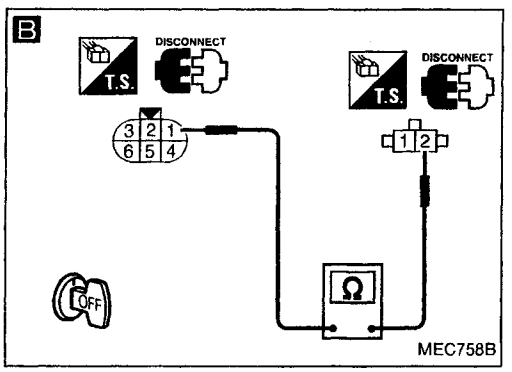

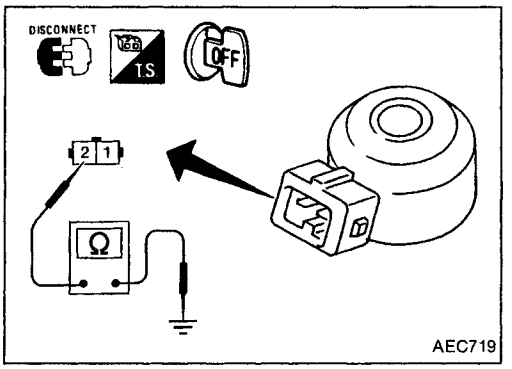

INSPECTION START

↓

Loosen and retighten engine ground screws.

↓

A

CHECK INPUT SIGNAL CIRCUIT.
1. Turn ignition switch "OFF".
2. Disconnect ECM harness connector and knock sensor harness connector.
3. Disconnect sub-harness connectors (F12), (E227).
4. Check harness continuity between terminal ① and ECM terminal ㉗.
   Continuity should exist.
   If OK, check harness for short.

NG → Repair harness or connectors.

↓ OK

B

CHECK SUB-HARNESS CIRCUIT.
1. Disconnect knock sensor harness connector.
2. Check harness continuity between knock sensor harness connector terminal ② and knock sensor sub-harness connector terminal ①.
   Continuity should exist.
   If OK, check harness for short.

NG → Repair harness or connectors.

↓ OK

CHECK COMPONENT
(Knock sensor).
Refer to "COMPONENT INSPECTION" below.

NG → Replace knock sensor.

↓ OK

Disconnect and reconnect harness connectors in the circuit. Then retest.

↓ Trouble is not fixed.

Check ECM pin terminals for damage and check the connection of ECM harness connector. Reconnect ECM harness connector and retest.

↓

INSPECTION END

COMPONENT INSPECTION

Knock sensor

- Use an ohmmeter which can measure more than 10 MΩ.

1. Disconnect knock sensor harness connector.
2. Check resistance between terminal ② and ground.
   Resistance: 500 - 620 kΩ [at 25°C (77°F)]

CAUTION:
Do not use any knock sensors that have been dropped or physically damaged. Use only new ones.

Simpo PDF Merge and Split Unregistered Version - http://www.simpopdf.com

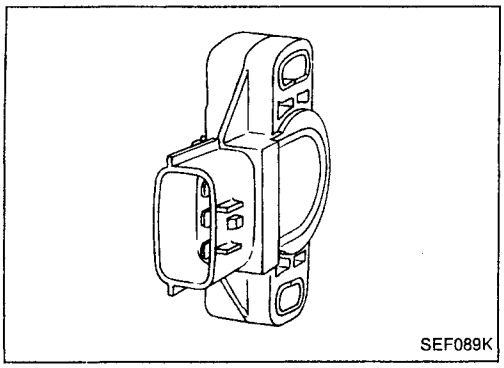
SEF089K

Throttle Position Sensor

The throttle position sensor responds to the accelerator pedal movement. This sensor is a kind of potentiometer which transforms the throttle position into output voltage, and emits the voltage signal to the ECM. In addition, the sensor detects the opening and closing speed of the throttle valve and feeds the voltage signal to the ECM.

Idle position of the throttle valve is determined by the ECM receiving the signal from the throttle position sensor. This one controls engine operation such as fuel cut.

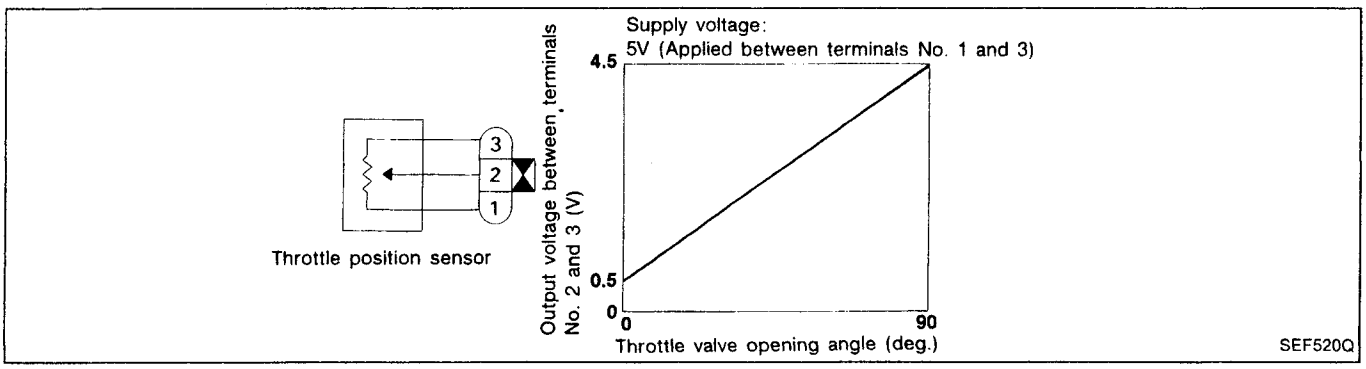

Diagnostic Trouble Code No.	Malfunction is detected when ...	Check Items (Possible Cause)
43	• An excessively low or high voltage from the sensor is sent to ECM.	• Harness or connectors (The sensor circuit is open or shorted.) • Throttle position sensor

Simpo PDF Merge and Split Unregistered Version - http://www.simpopdf.com

Throttle Position Sensor (Cont'd)

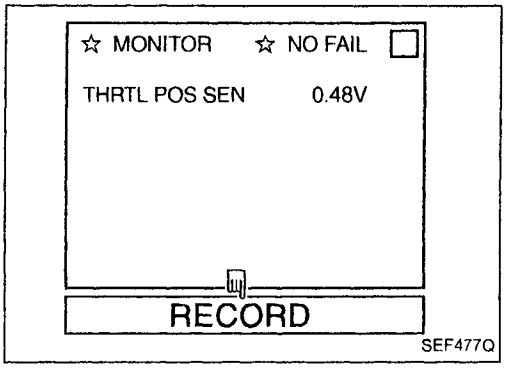

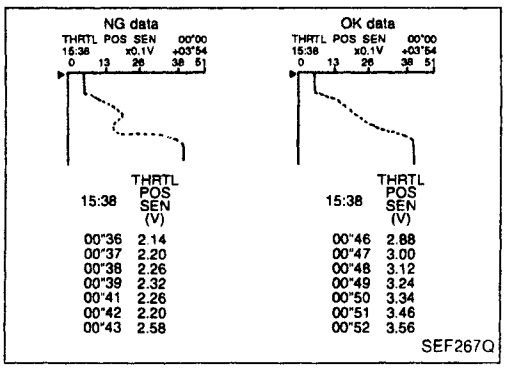

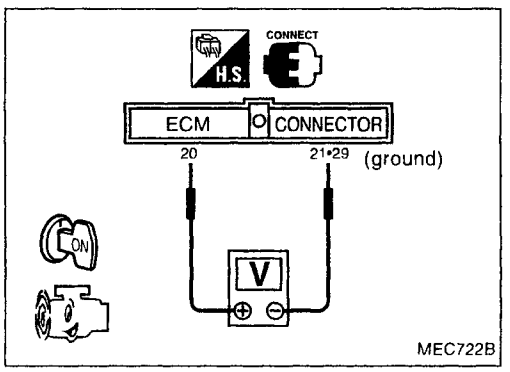

OVERALL FUNCTION CHECK

Use this procedure to check the overall function of the throttle position sensor. During this check, a DTC might not be confirmed.

1) Turn ignition switch "ON".
2) Select "MANU TRIG" and "HI SPEED" in "DATA MONITOR" mode with CONSULT.
3) Select "THRTL POS SEN" in "DATA MONITOR" mode with CONSULT.
4) Press RECORD on CONSULT SCREEN at the same time accelerator pedal is depressed.
5) Print out the recorded data and check the following:
   - The voltage when accelerator pedal fully released is approximately 0.35 - 0.65V.
   - The voltage rise is linear in response to accelerator pedal depression.
   - The voltage when accelerator pedal fully depressed is approximately 4V.

OR

1) Turn ignition switch "ON".
2) Check the voltage between ECM terminals ⑳ and ㉑, ㉙ (ground) and check the following:
   - The voltage when accelerator pedal fully released is approximately 0.35 - 0.65V.
   - The voltage rise is linear in response to accelerator pedal depression.
   - The voltage when accelerator pedal fully depressed is approximately 4V.

Simpo PDF Merge and Split Unregistered Version - http://www.simpopdf.com

Throttle Position Sensor (Cont'd)

EC-TPS-01

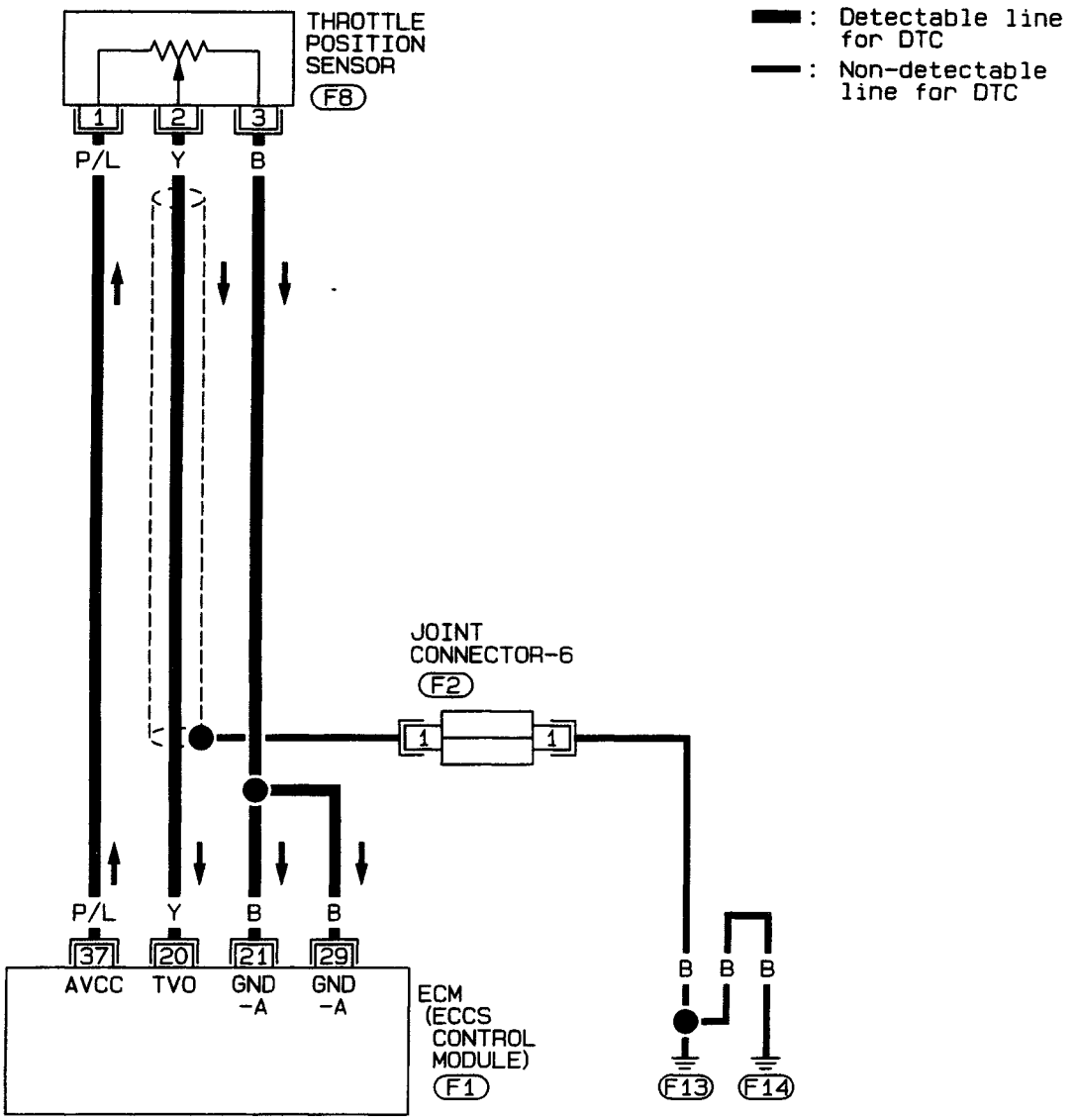

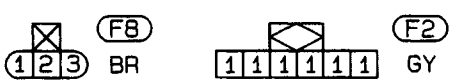

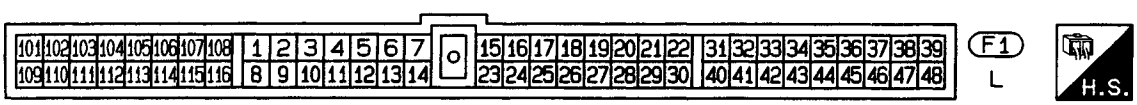

HEC008

Simpo PDF Merge and Split Unregistered Version - http://www.simpopdf.com

Throttle Position Sensor (Cont'd)

DIAGNOSTIC PROCEDURE

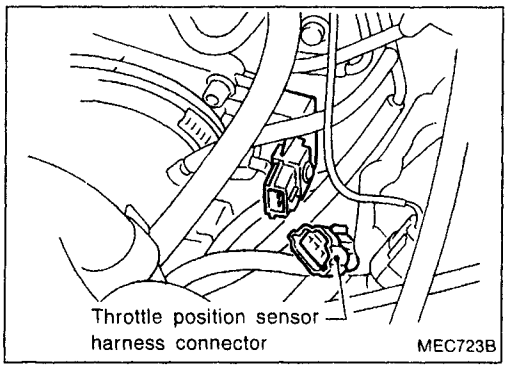

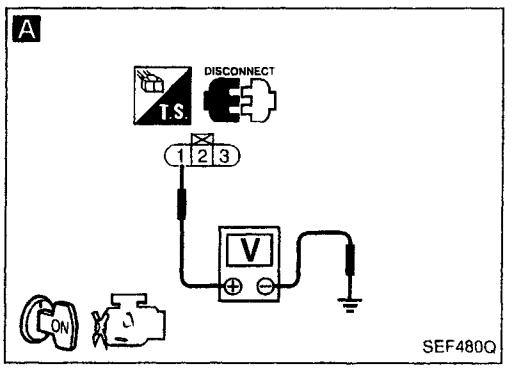

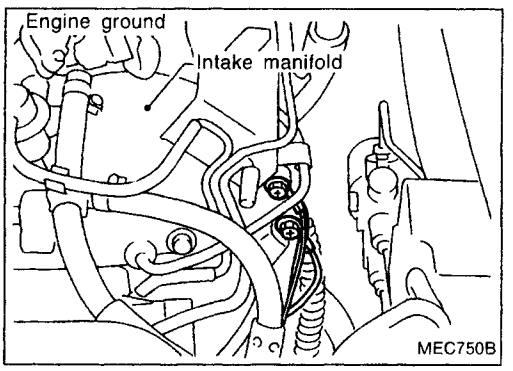

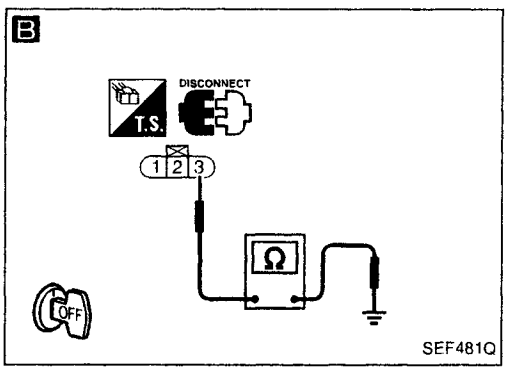

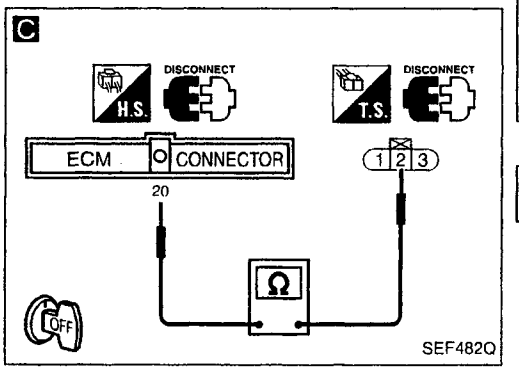

INSPECTION START

A

CHECK POWER SUPPLY.
1. Turn ignition switch "OFF".
2. Disconnect throttle position sensor harness connector.
3. Turn ignition switch "ON".
4. Check voltage between terminal ① and ground with CONSULT or tester.
   Voltage: Approximately 5V

NG → Repair harness or connectors.

OK ↓

B

CHECK GROUND CIRCUIT.
1. Turn ignition switch "OFF".
2. Loosen and retighten engine ground screw.
3. Check harness continuity between terminal ③ and engine ground.
   Continuity should exist.
   If OK, check harness for short.

NG → Check the following.
- Harness for open or short between ECM and throttle position sensor

If NG, repair harness or connectors.

OK ↓

C

CHECK INPUT SIGNAL CIRCUIT.
1. Disconnect ECM harness connector.
2. Check harness continuity between ECM terminal ⑳ and terminal ②.
   Continuity should exist.
   If OK, check harness for short.

NG → Repair harness or connectors.

OK ↓

ADJUST THROTTLE POSITION SENSOR.
Perform "Basic Inspection", EC-271.

OK ↓

CHECK COMPONENT (Throttle position sensor).
Refer to "COMPONENT INSPECTION" on next page.

NG → Replace throttle position sensor. To adjust it, perform "Basic Inspection", EC-271.

OK ↓

Disconnect and reconnect harness connectors in the circuit. Then retest.

Trouble is not fixed. ↓

Check ECM pin terminals for damage and check the connection of ECM harness connector. Reconnect ECM harness connector and retest.

INSPECTION END

Simpo PDF Merge and Split Unregistered Version - http://www.simpopdf.com

Throttle Position Sensor (Cont'd)

COMPONENT INSPECTION

Throttle position sensor

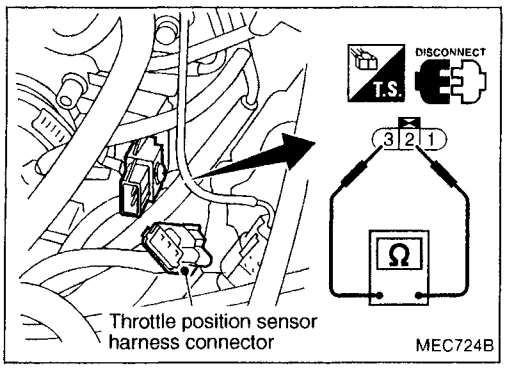

1. Disconnect throttle position sensor harness connector.
2. Make sure that resistance between terminals ② and ③ changes when opening throttle valve manually.

Throttle valve conditions	Resistance [at 25°C (77°F)]
Completely closed	Approximately 1 kΩ
Partially open	1 - 10 kΩ
Completely open	Approximately 10 kΩ

If NG, replace throttle position sensor.
To adjust it, perform "Basic Inspection", EC-271.

EC

Simpo PDF Merge and Split Unregistered Version - http://www.simpopdf.com

Vehicle Speed Sensor (VSS)

EC-VSS-01

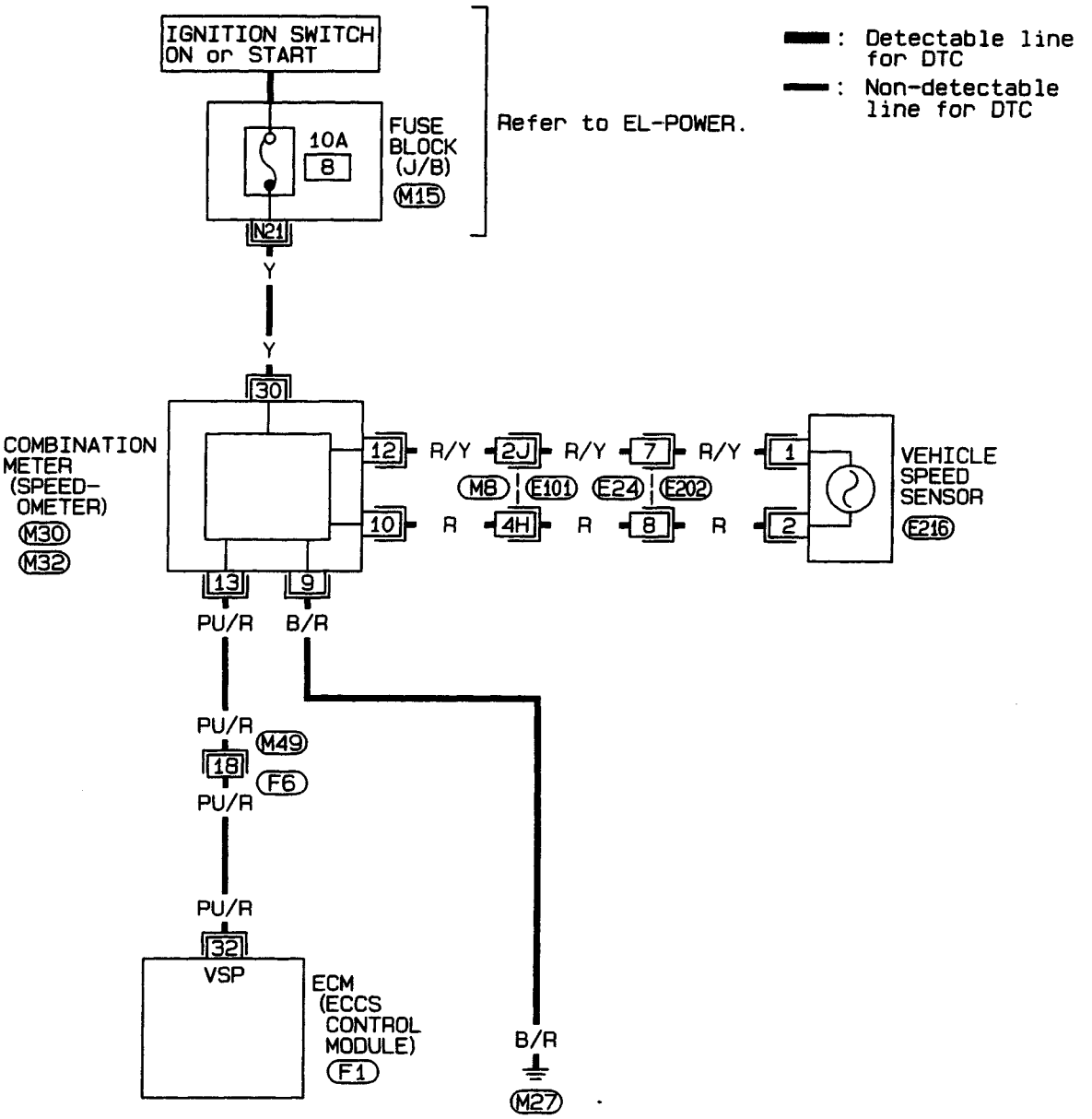

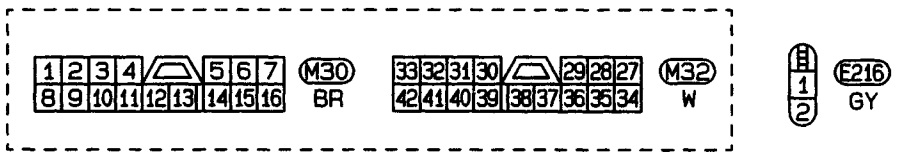

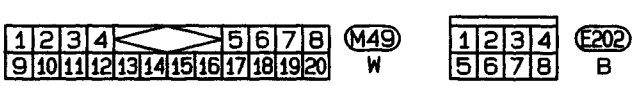

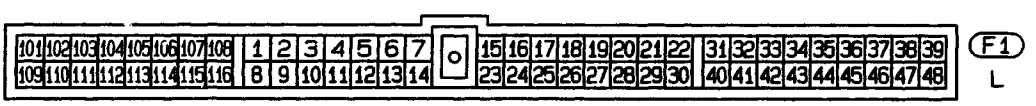

Refer to last page (Foldout page).

M8, E101
M15

HEC009

Simpo PDF Merge and Split Unregistered Version - http://www.simpopdf.com

Vehicle Speed Sensor (VSS) (Cont'd)

COMPONENT DESCRIPTION

The vehicle speed sensor is installed in the transaxle. It contains a pulse generator which provides a vehicle speed signal to the speedometer. The speedometer then sends a signal to the ECM.

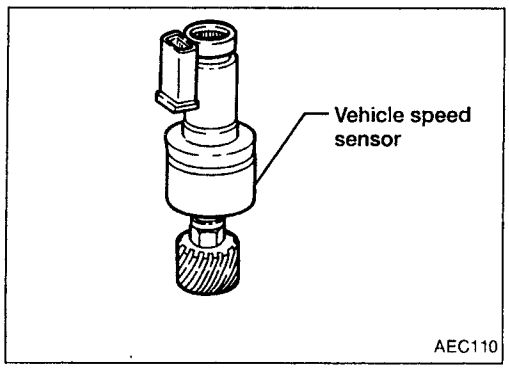

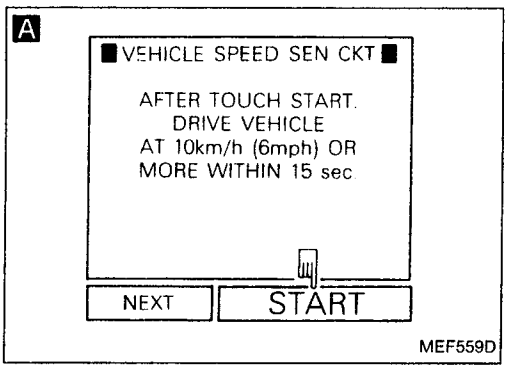

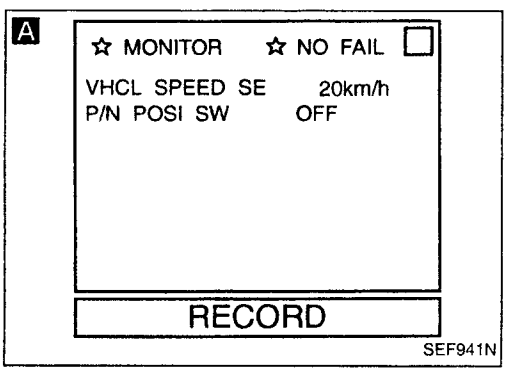

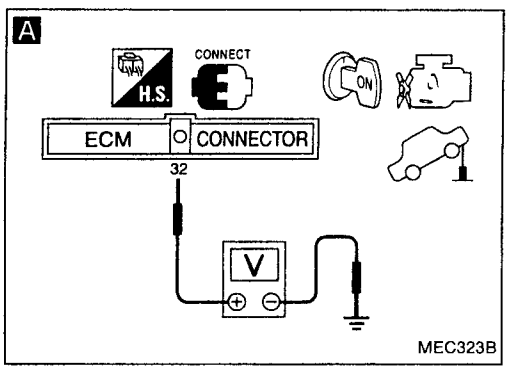

DIAGNOSTIC PROCEDURE

INSPECTION START

A

CHECK OVERALL FUNCTION.
1. Jack up drive wheels.
2. Perform "VEHICLE SPEED SEN CKT" in "FUNCTION TEST" mode with CONSULT.

OR

2. Read "VHCL SPEED SE" signal in "DATA MONITOR" mode with CONSULT.
CONSULT value should be the same as the speedometer indication.

OR

2. Turn ignition switch "ON".
3. Rotate drive wheel by hand.
4. Check voltage between ECM terminal ㉜ and body ground.
Voltage should vary between approx. 0 - 5V.

OK → INSPECTION END

NG

CHECK SPEEDOMETER FUNCTION.
Make sure that speedometer functions properly.

NG → Check vehicle speed sensor and circuit. (Refer to "Inspection/ Speedometer and Vehicle Speed Sensor" of "METER AND GAUGES" in EL section.)

OK

Ⓐ

EC

Simpo PDF Merge and Split Unregistered Version - http://www.simpopdf.com

Vehicle Speed Sensor (VSS) (Cont'd)

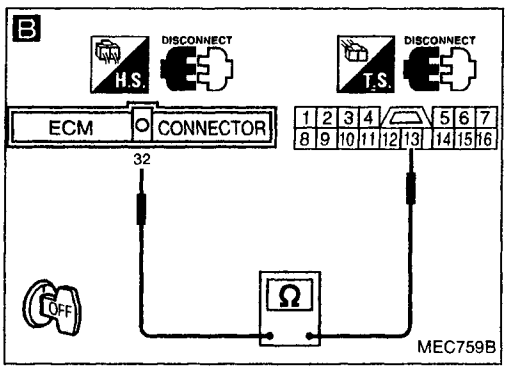

Ⓐ

B

CHECK INPUT SIGNAL CIRCUIT.

1. Turn ignition switch "OFF".
2. Disconnect ECM harness connector and combination meter harness connector.
3. Check harness continuity between ECM terminal ㉜ and terminal ⑬.
   Continuity should exist.
   If OK, check harness for short.

NG →

Check the following.
- Harness connectors (F6), (M49)
- Harness for open or short between ECM and combination meter

If NG, repair harness or connectors.

OK ↓

Disconnect and reconnect harness connectors in the circuit. Then retest.

Trouble is not fixed. ↓

Check ECM pin terminals for damage and check the connection of ECM harness connector. Reconnect ECM harness connector and retest.

↓

INSPECTION END

Simpo PDF Merge and Split Unregistered Version - http://www.simpopdf.com

Start Signal

EC-S/SIG-01

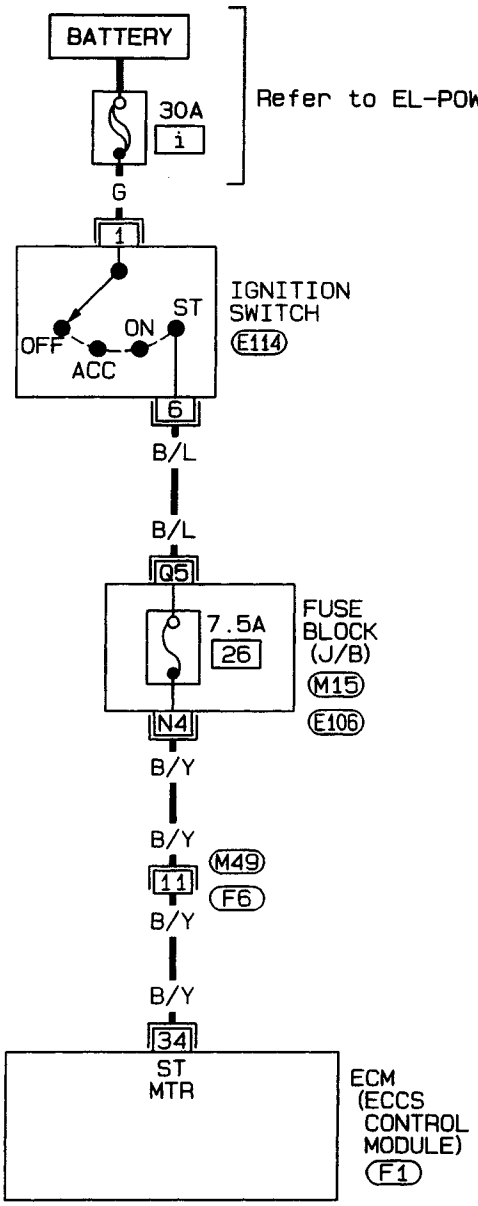

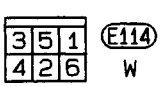

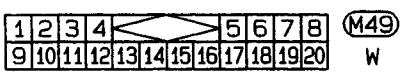

Refer to last page (Foldout page).

M15, E106

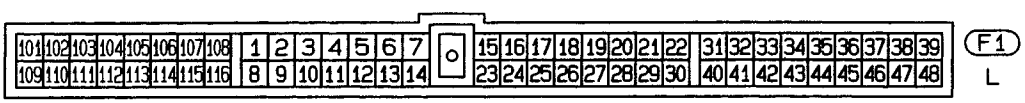

HEC010

Simpo PDF Merge and Split Unregistered Version - http://www.simpopdf.com

Start Signal (Cont'd)

DIAGNOSTIC PROCEDURE

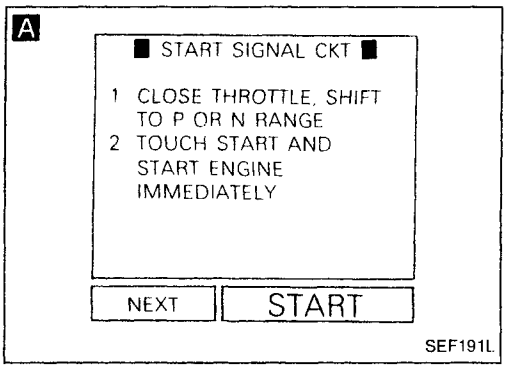

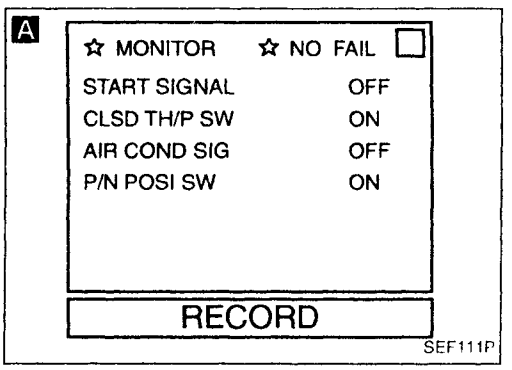

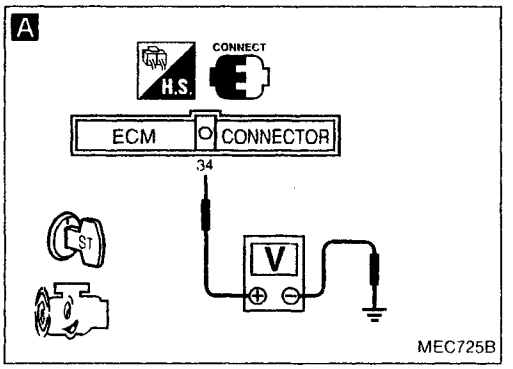

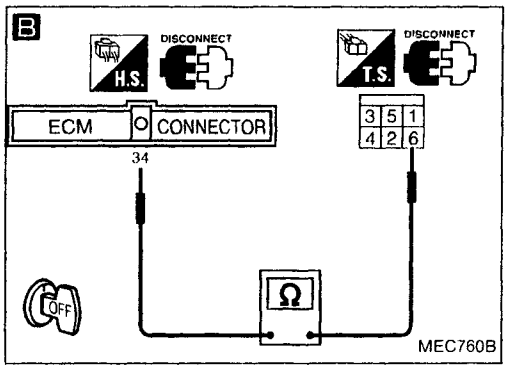

INSPECTION START

A

CHECK OVERALL FUNCTION.

1. Turn ignition switch "ON".
2. Perform "START SIGNAL CKT" in "FUNCTION TEST" mode with CONSULT.

OK → INSPECTION END

OR

1. Turn ignition switch "ON".
2. Check "START SIGNAL" in "DATA MONITOR" mode with CONSULT.

IGN "ON"	OFF
IGN "START"	ON

OR

1. Turn ignition switch to "START".
2. Check voltage between ECM terminal (34) and ground.

Voltage:
Ignition switch "START"
Battery voltage
Except above
Approximately 0V

NG

B

CHECK INPUT SIGNAL CIRCUIT.

1. Turn ignition switch "OFF".
2. Disconnect ECM harness connector and ignition switch harness connector.
3. Check harness continuity between ECM terminal (34) and terminal (6).
Continuity should exist.
If OK, check harness for short.

NG → Check the following.
- Harness connectors (F6), (M49)
- 7.5A fuse
- Harness for open or short between ECM and ignition switch

If NG, repair harness or connectors.

OK

Disconnect and reconnect harness connectors in the circuit. Then retest.

Trouble is not fixed.

Check ECM pin terminals for damage and check the connection of ECM harness connector. Reconnect ECM harness connector and retest.

INSPECTION END

Simpo PDF Merge and Split Unregistered Version - http://www.simpopdf.com

Exhaust Gas Recirculation (EGR) Valve and EVAP Canister Purge Control

SYSTEM DESCRIPTION

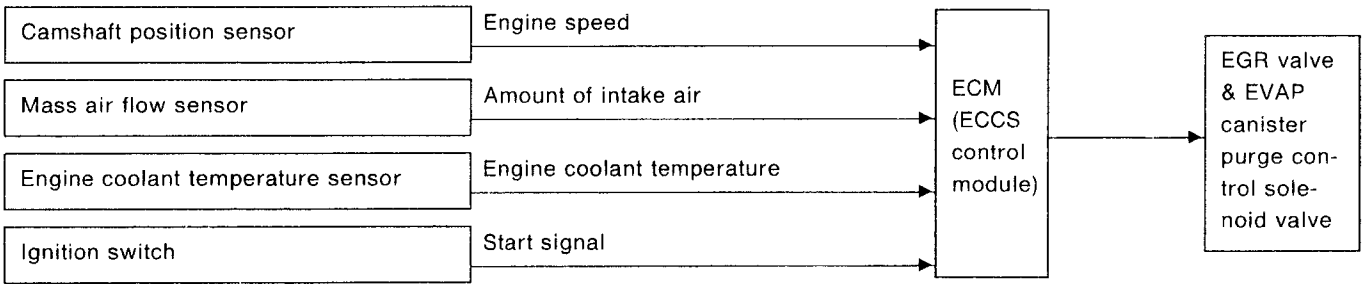

This system cuts and controls vacuum applied to EGR valve and EVAP canister to suit engine operating conditions. This cut-and-control operation is accomplished through the ECM and the EGR valve & EVAP canister purge control solenoid valve. When the ECM detects any of the following conditions, current flows through the solenoid valve. This causes the port vacuum to be discharged into the atmosphere. The EGR valve and EVAP canister remain closed.

- Low engine coolant temperature
- Engine starting
- High-speed engine operation
- Engine idling
- Excessively high engine coolant temperature
- Mass air flow sensor malfunction

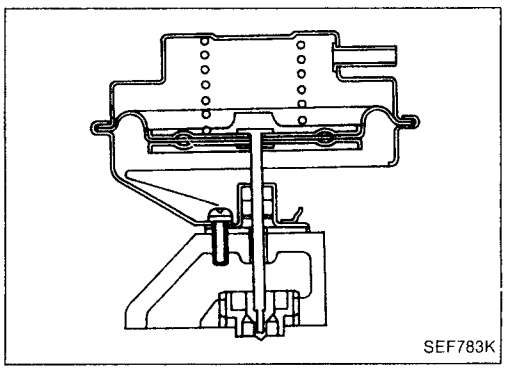

COMPONENT DESCRIPTION

EGR valve

The EGR valve controls the amount of exhaust gas routed to the intake manifold. Vacuum is applied to the EGR valve in response to throttle valve opening. The vacuum controls the movement of a taper valve connected to the vacuum diaphragm in the EGR valve.

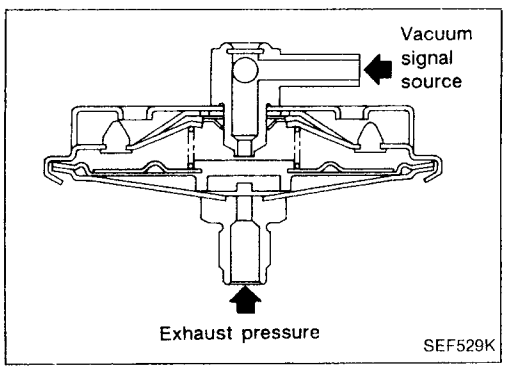

EGRC-BPT valve

The EGRC-BPT valve monitors exhaust pressure to activate the diaphragm, controlling throttle body vacuum applied to the EGR valve. In other words, recirculated exhaust gas is controlled in response to positioning of the EGR valve or to engine operation.

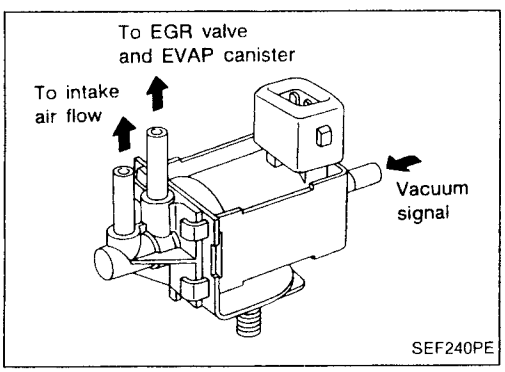

EGR valve & EVAP canister purge control solenoid valve

The EGR valve & EVAP canister purge control solenoid valve responds to signals from the ECM. When the ECM sends an ON (ground) signal, the coil in the solenoid valve is energized. A plunger will then move to cut the vacuum signal (from the throttle body to the EGR valve and EVAP canister purge valve). When the ECM sends an OFF signal, the vacuum signal passes through the solenoid valve. The signal then reaches the EGR valve and EVAP canister.

Simpo PDF Merge and Split Unregistered Version - http://www.simpopdf.com

Exhaust Gas Recirculation (EGR) Valve and EVAP Canister Purge Control (Cont'd)

EC-EGRC/V-01

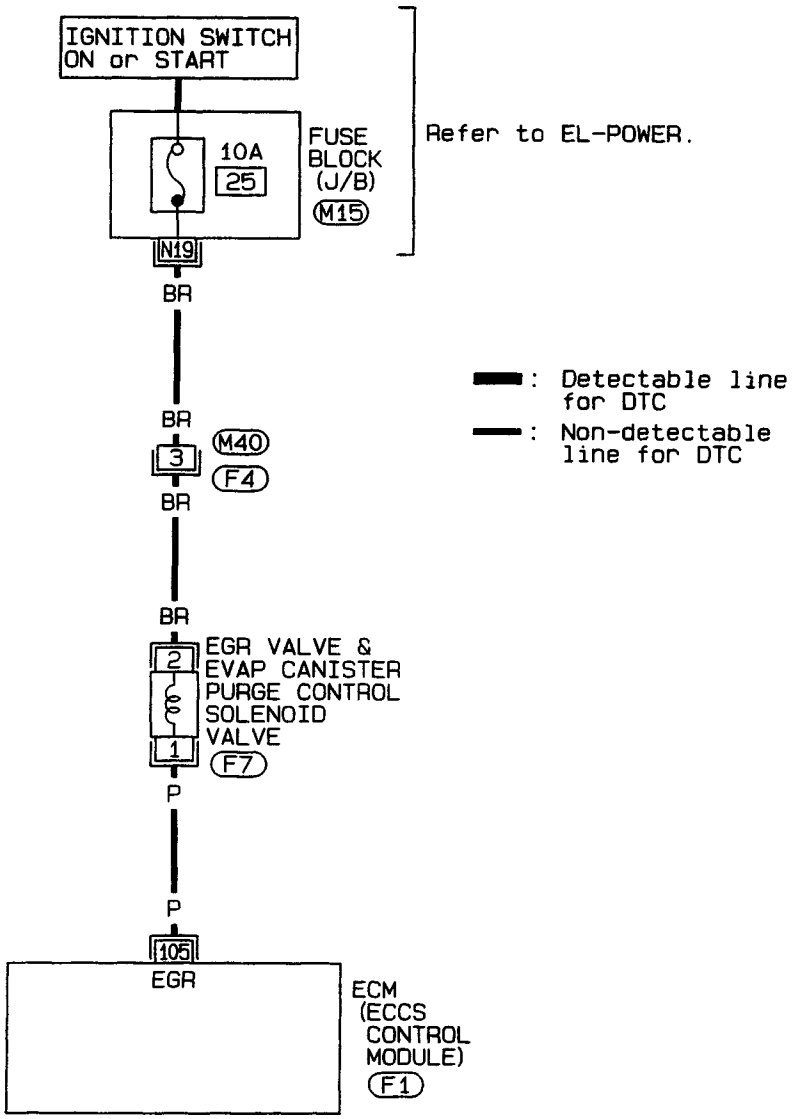

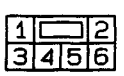

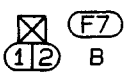

Refer to last page (Foldout page).

M15

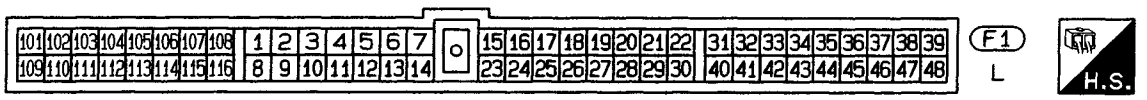

HEC014

Simpo PDF Merge and Split Unregistered Version - http://www.simpopdf.com

Exhaust Gas Recirculation (EGR) Valve and EVAP Canister Purge Control (Cont'd)

DIAGNOSTIC PROCEDURE

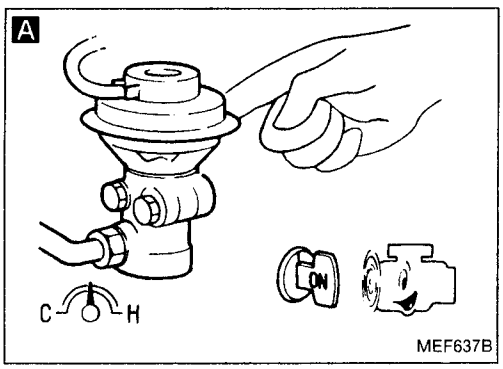

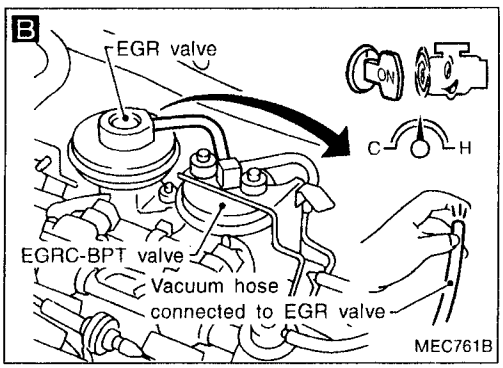

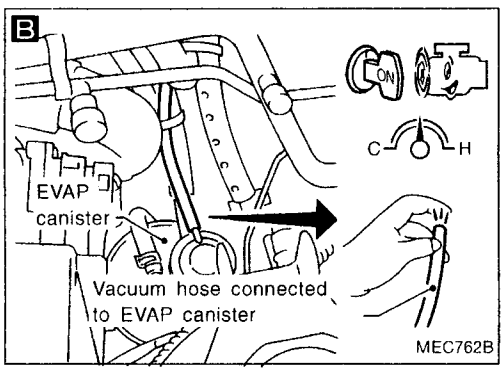

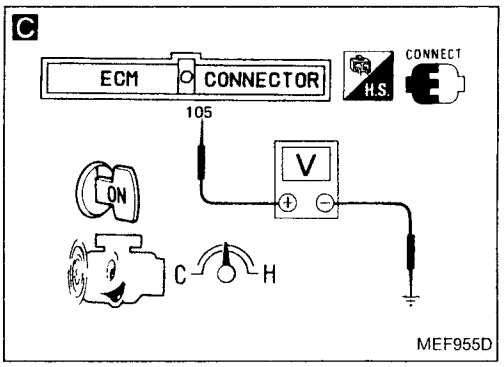

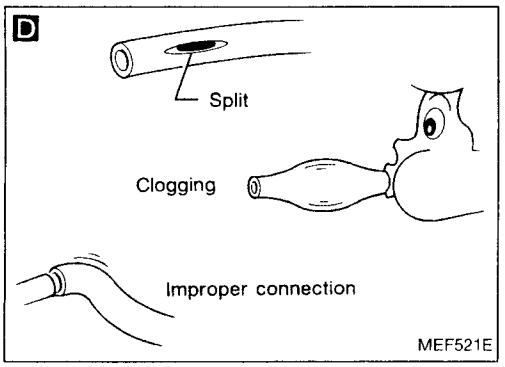

INSPECTION START

A

CHECK OVERALL FUNCTION.

1. Start engine and warm it up sufficiently.
2. Perform diagnostic test mode II (Self-diagnostic results).
   Make sure that Diagnostic trouble code No. 12 is not displayed.
3. Keep engine speed at about 2,000 rpm. Make sure that EGR valve spring moves up and down when engine is raced to about 4,000 rpm. (Use your finger.)

OK → INSPECTION END

NG ↓

B

CHECK VACUUM SOURCE TO EGR VALVE.

1. Disconnect vacuum hose to EGR valve.
2. Disconnect vacuum hose to EVAP canister.
3. Check vacuum existence under the following conditions.

Engine speed is 4,000 rpm:
Vacuum should not exist.
Engine speed is 2,000 rpm:
Vacuum should exist.

OK → CHECK COMPONENTS (EGR valve and EGRC-BPT valve).
Refer to "COMPONENT INSPECTION", EC-323.

NG ↓

Replace malfunctioning component(s).

NG ↓

C

CHECK CONTROL FUNCTION.

Check voltage between ECM terminal (105) and ground under the following conditions.

Engine speed is 4,000 rpm
0.6 - 0.8V
Engine speed is 2,000 rpm
Battery voltage

OK → D

CHECK VACUUM HOSE.
Check vacuum hose for clogging, cracks or improper connection.

NG ↓

Ⓐ

EC

Simpo PDF Merge and Split Unregistered Version - http://www.simpopdf.com

Exhaust Gas Recirculation (EGR) Valve and EVAP Canister Purge Control (Cont'd)

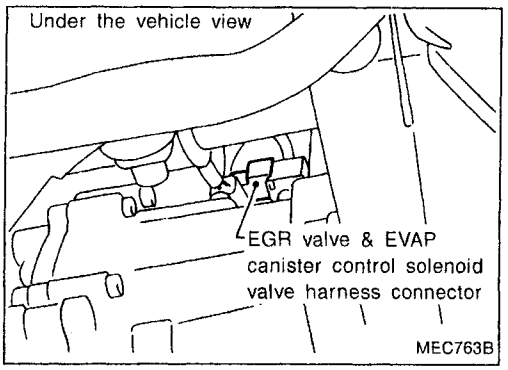

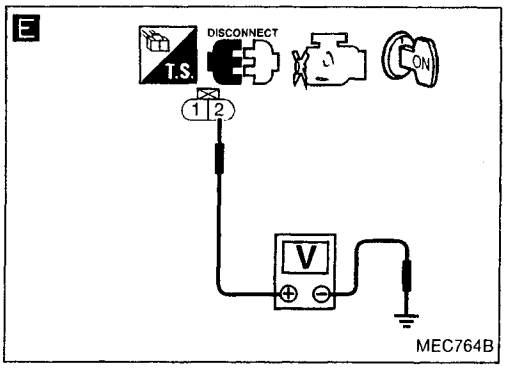

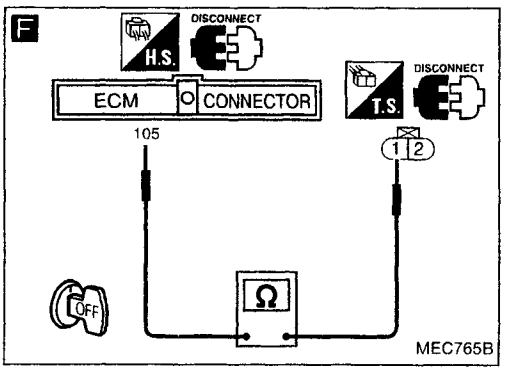

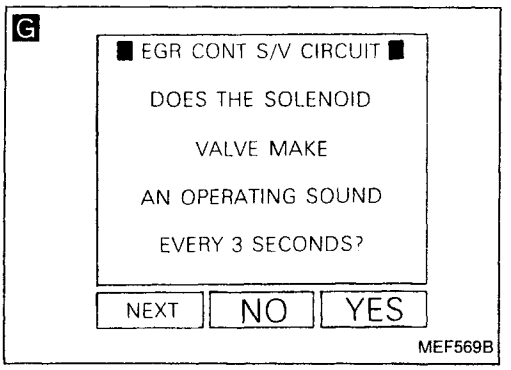

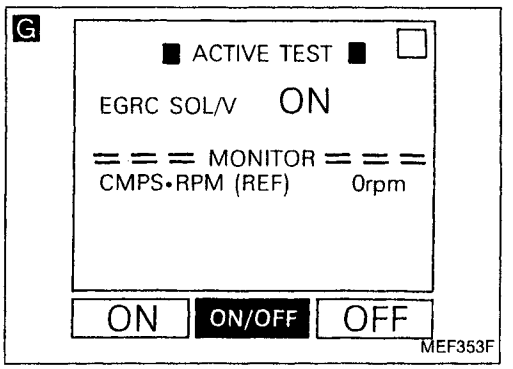

Ⓐ

E

CHECK POWER SUPPLY.
1. Stop engine.
2. Disconnect EGR valve & EVAP canister purge control solenoid valve harness connector.
3. Turn ignition switch "ON".
4. Check voltage between terminal ② and ground.
   Voltage: Battery voltage

NG → Check the following.
- Harness connectors (F4), (M40)
- 10A fuse
- Harness open or short between EGR valve & EVAP canister purge control solenoid valve and fuse

If NG, repair harness or connectors.

OK ↓

F

CHECK OUTPUT SIGNAL CIRCUIT.
1. Turn ignition switch "OFF".
2. Disconnect ECM harness connector.
3. Check harness continuity between ECM terminal (105) and terminal ①.
   Continuity should exist.
   If OK, check harness for short.

NG → Repair harness or connectors.

OK ↓

G

CHECK COMPONENT
(EGR valve & EVAP canister purge control solenoid valve).

1. Reconnect ECM harness connector and EGR valve & EVAP canister purge control solenoid valve harness connector.
2. Turn ignition switch "ON".
3. Perform "EGRC SOL/V CIRCUIT" in "FUNCTION TEST" mode with CONSULT.

NG → Replace EGR valve & EVAP canister purge control solenoid valve.

— OR —

3. Turn EGR valve & EVAP canister purge control solenoid valve "ON" and "OFF" in "ACTIVE TEST" mode with CONSULT and check operating sound.

— OR —

Refer to "COMPONENT INSPECTION" on next page.

OK ↓

Disconnect and reconnect harness connectors in the circuit. Then retest.

Trouble is not fixed. ↓

Check ECM pin terminals for damage and check the connection of ECM harness connector. Reconnect ECM harness connector and retest.

↓

INSPECTION END

Simpo PDF Merge and Split Unregistered Version - http://www.simpopdf.com

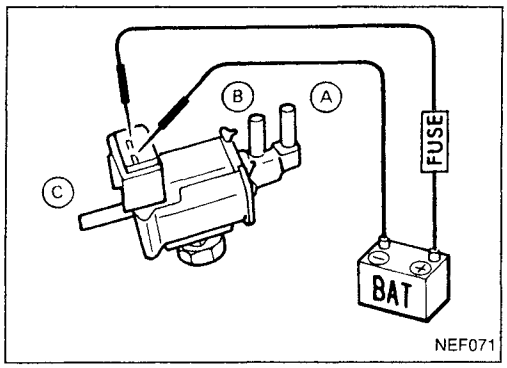

Exhaust Gas Recirculation (EGR) Valve and EVAP Canister Purge Control (Cont'd)

COMPONENT INSPECTION

EGR valve & EVAP canister purge control solenoid valve

1. Disconnect EGR valve & EVAP canister purge control solenoid valve harness connector.
2. Check solenoid valve, following the table as shown below:

Conditions	Air passage continuity between Ⓐ and Ⓑ	Air passage continuity between Ⓑ and Ⓒ
12V direct current supply between terminals ① and ②	Yes	No
No supply	No	Yes

If NG, replace EGR valve & EVAP canister purge control solenoid valve.

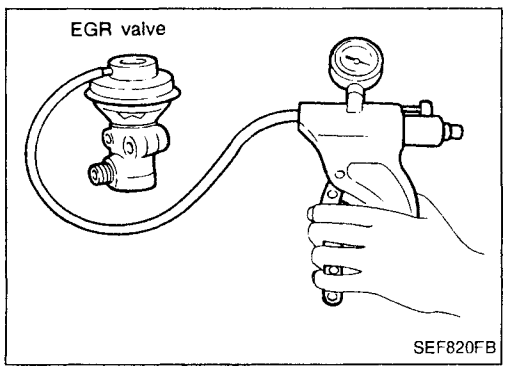

EGR valve

Apply vacuum to EGR vacuum port with a hand vacuum pump.
EGR valve spring should lift.
If NG, replace EGR valve.

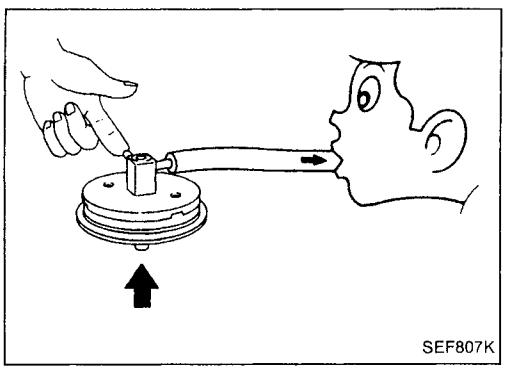

EGRC-BPT valve

Plug one of two ports of EGRC-BPT valve.
Apply a pressure above 0.490 kPa (4.90 mbar, 50 mmH_2O, 1.97 inH_2O) to check for leakage. If a leak is noted, replace valve.

EC

Simpo PDF Merge and Split Unregistered Version - http://www.simpopdf.com

Injector

EC-INJECT-01

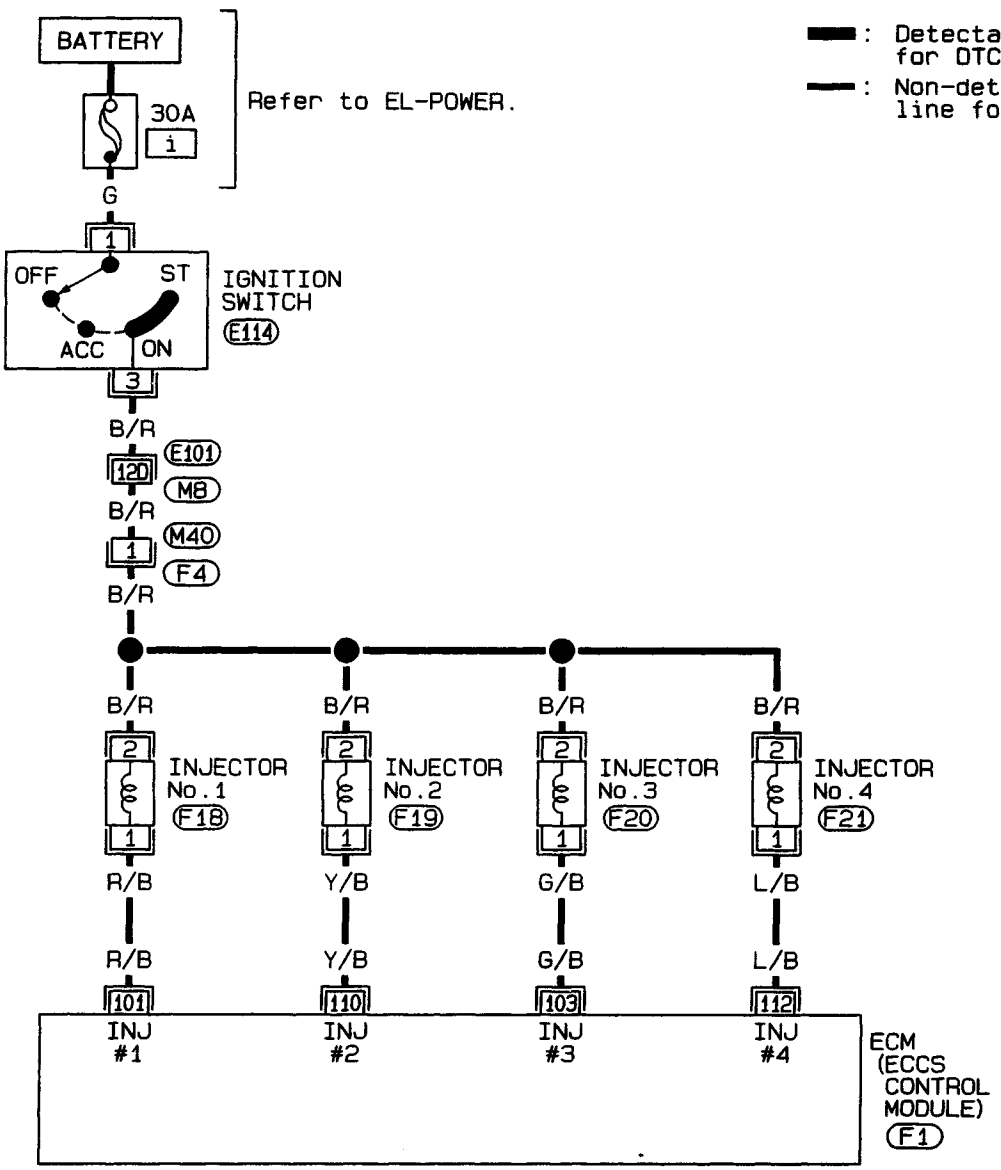

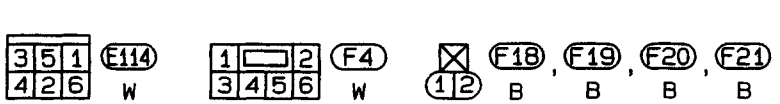

Refer to last page (Foldout page).

M8, E101

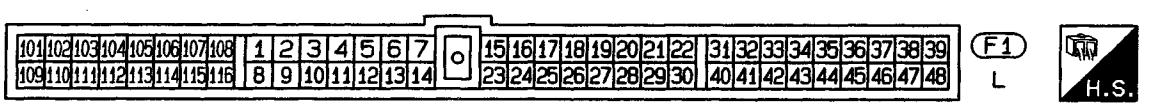

HEC011

Simpo PDF Merge and Split Unregistered Version - http://www.simpopdf.com

Injector (Cont'd)

COMPONENT DESCRIPTION

The fuel injector is a small, precise solenoid valve. When the ECM supplies a ground to the injector circuit, the coil in the injector is energized. The energized coil pulls the needle valve back and allows fuel to flow through the injector into the intake manifold. The amount of fuel injected depends upon the injection pulse duration. Pulse duration is the length of time the injector remains open. The ECM controls the injection pulse duration based on engine fuel needs.

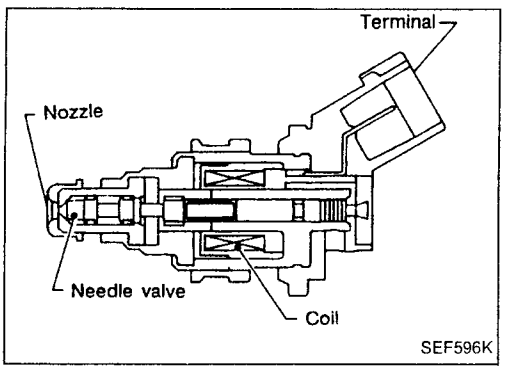

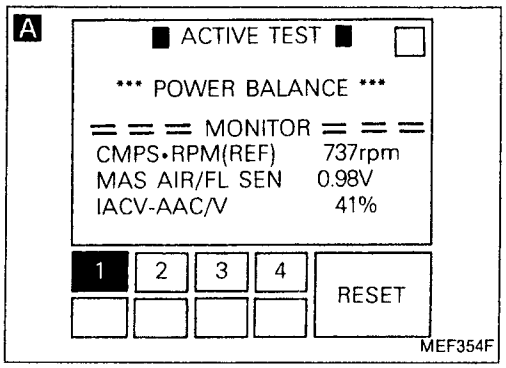

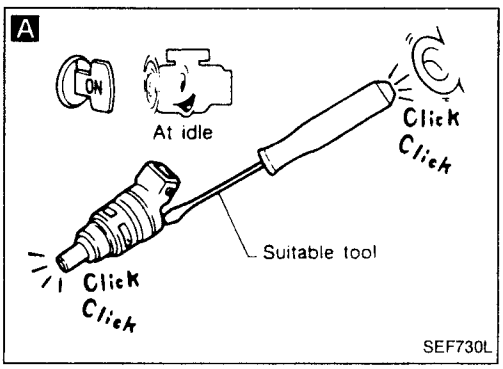

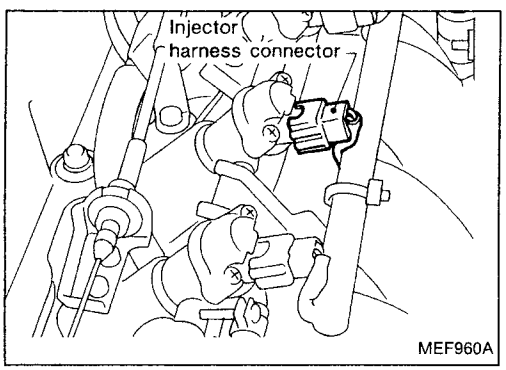

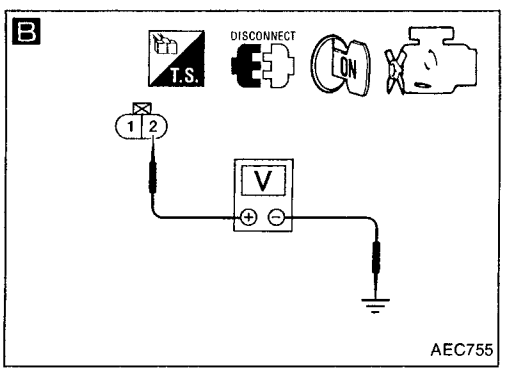

DIAGNOSTIC PROCEDURE

EC

INSPECTION START

A

CHECK OVERALL FUNCTION.

1. Start engine.
2. Perform "POWER BALANCE" in "ACTIVE TEST" mode with CONSULT.
3. Make sure that each circuit produces a momentary engine speed drop.

OR

1. Start engine.
2. Listen to each injector operating sound.

Clicking noise should be heard.

OK → INSPECTION END

NG

B

CHECK POWER SUPPLY.

1. Stop engine.
2. Disconnect injector harness connector.
3. Turn ignition switch "ON".
4. Check voltage between injector harness connector terminal ② and ground with CONSULT or tester.

Voltage: Battery voltage

NG → Check the following.
- Harness connectors (F4), (M40)
- Harness connectors (M8), (E101)
- Harness for open or short between injector and ignition switch

If NG, repair harness or connectors.

OK → Ⓐ

Simpo PDF Merge and Split Unregistered Version - http://www.simpopdf.com

Injector (Cont'd)

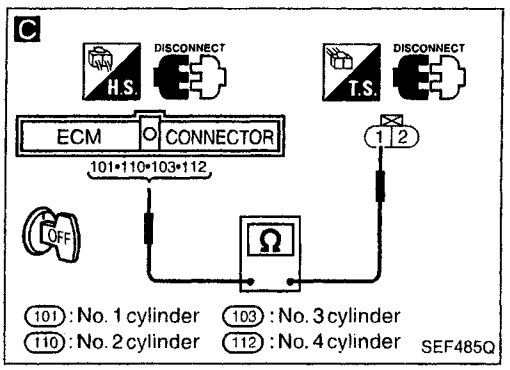

Ⓐ

C

CHECK OUTPUT SIGNAL CIRCUIT.
1. Turn ignition switch "OFF".
2. Disconnect ECM harness connector.
3. Check harness continuity between injector harness connector terminal ① and ECM terminals (101), (110), (103), (112).

Continuity should exist.
If OK, check harness for short.

NG → Repair harness or connectors.

OK ↓

CHECK COMPONENT (Injector).
Refer to "COMPONENT INSPECTION" below.

NG → Replace injector.

OK ↓

Disconnect and reconnect harness connectors in the circuit. Then retest.

Trouble is not fixed. ↓

Check ECM pin terminals for damage and check the connection of ECM harness connector. Reconnect ECM harness connector and retest.

↓

INSPECTION END

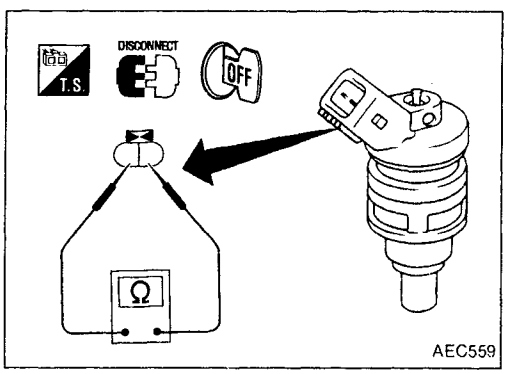

COMPONENT INSPECTION

Injector

1. Disconnect injector harness connector.
2. Check resistance between terminals as shown in the figure.
   Resistance: 10 - 14Ω [at 25° (77°F)]
   If NG, replace injector.

Simpo PDF Merge and Split Unregistered Version - http://www.simpopdf.com

Fuel Pump

SYSTEM DESCRIPTION

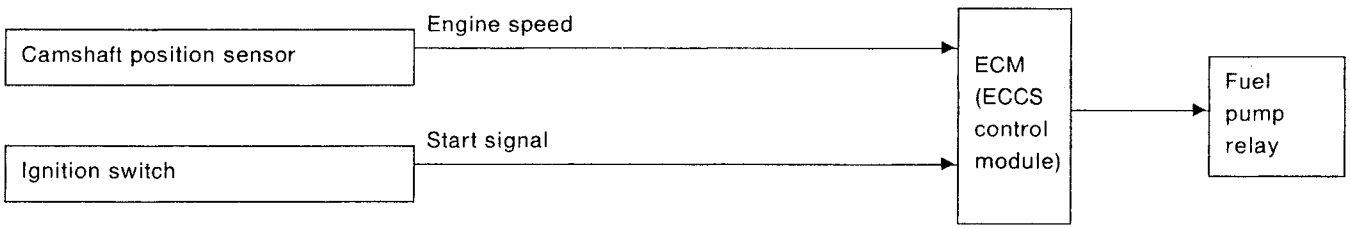

The ECM activates the fuel pump for several seconds after the ignition switch is turned on to improve engine startability. If the ECM receives a 180° signal from the camshaft position sensor, it knows that the engine is rotating, and causes the pump to perform. If the 180° signal is not received when the ignition switch is on, the engine stalls. The ECM stops pump operation and prevents battery discharging, thereby improving safety. The ECM does not directly drive the fuel pump. It controls the ON/OFF fuel pump relay, which in turn controls the fuel pump.

Condition	Fuel pump operation
Ignition switch is turned to "ON"	Operates for 5 seconds
Engine running and cranking	Operates
When engine is stopped	Stops in 1 second
Except as shown above	Stops

EC

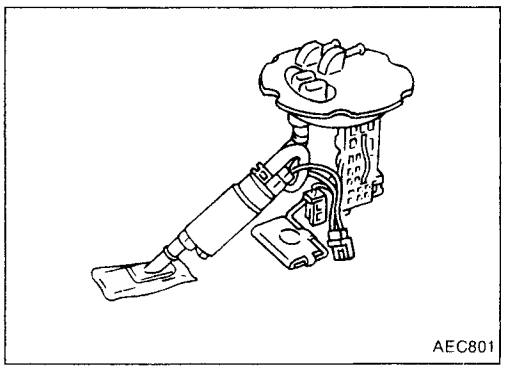

COMPONENT DESCRIPTION

The fuel pump with a fuel damper is an in-tank type (the pump and damper are located in the fuel tank).

Simpo PDF Merge and Split Unregistered Version - http://www.simpopdf.com

Fuel Pump (Cont'd)

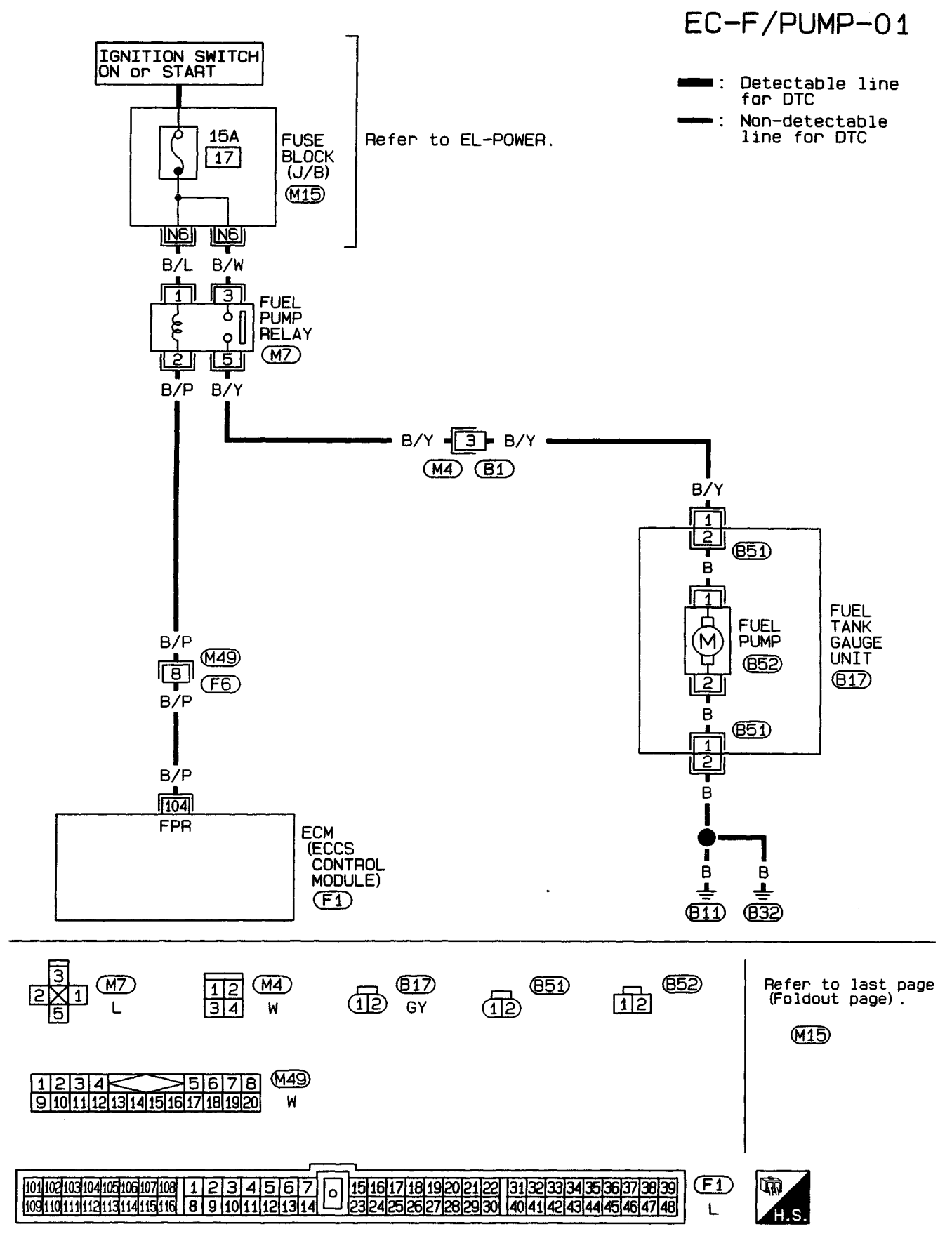

HEC012

Simpo PDF Merge and Split Unregistered Version - http://www.simpopdf.com

Fuel Pump (Cont'd)

DIAGNOSTIC PROCEDURE

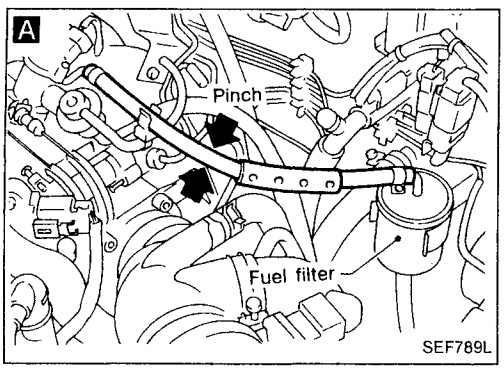

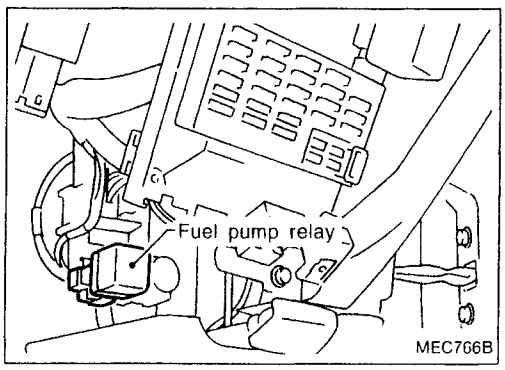

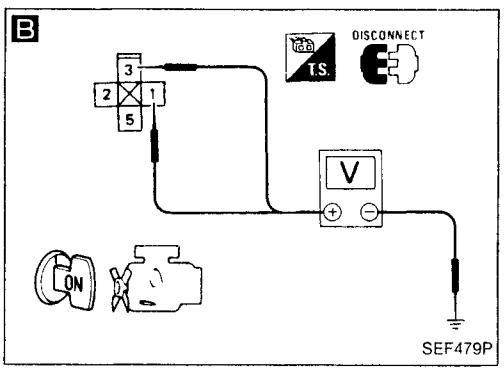

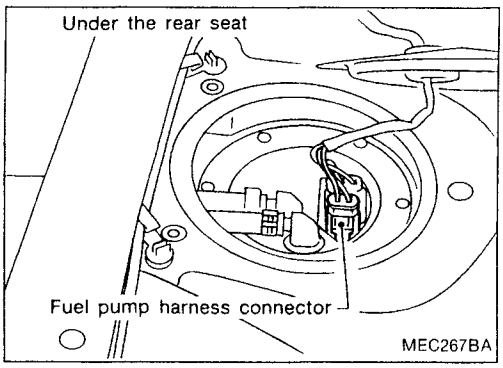

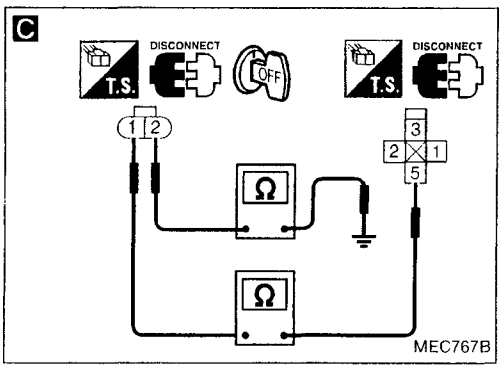

INSPECTION START

A

CHECK OVERALL FUNCTION.
1. Turn ignition switch "ON".
2. Pinch fuel feed hose with fingers.
   Fuel pressure pulsation should be felt on the fuel feed hose for 5 seconds after ignition switch is turned "ON".

OK → INSPECTION END

NG

B

CHECK POWER SUPPLY.
1. Turn ignition switch "OFF".
2. Disconnect fuel pump relay.
3. Turn ignition switch "ON".
4. Check voltage between terminals ①, ③ and ground with CONSULT or tester.
   Voltage: Battery voltage

NG → Check the following.
- 15A fuse
- Harness for open or short between fuse and fuel pump relay

If NG, repair harness or connectors.

OK

C

CHECK POWER AND GROUND CIRCUIT.
1. Turn ignition switch "OFF".
2. Disconnect fuel pump harness connector.
3. Check harness continuity between terminal ② and body ground, terminal ① and fuel pump relay connector terminal ⑤.
   Continuity should exist.
   If OK, check harness for short.

NG → Check the following.
- Harness connectors (M4), (B1)
- Harness for open or short between fuel pump and body ground
- Harness for open or short between fuel pump and fuel pump relay

If NG, repair harness or connectors.

OK

D

CHECK OUTPUT SIGNAL CIRCUIT.
1. Disconnect ECM harness connector.
2. Check harness continuity between ECM terminal (104) and fuel pump relay connector terminal ②.
   Continuity should exist.
   If OK, check harness for short.

NG → Check the following.
- Harness connectors (M49), (F6)
- Harness for open or short between ECM and fuel pump relay

If NG, repair harness or connectors.

OK → Ⓐ

EC

Simpo PDF Merge and Split Unregistered Version - http://www.simpopdf.com

Fuel Pump (Cont'd)

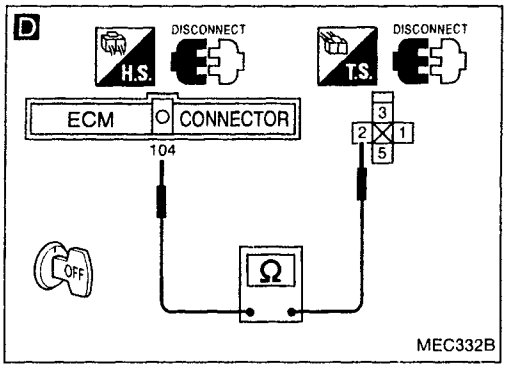

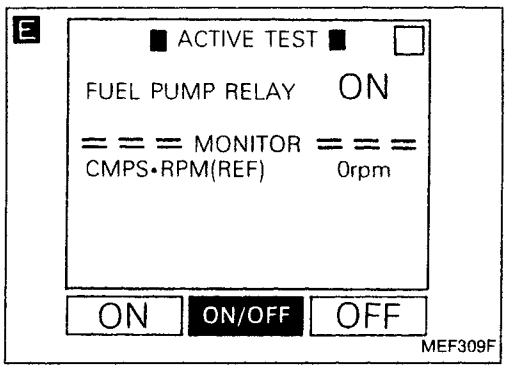

Ⓐ

E

CHECK COMPONENT
(Fuel pump relay).

1. Reconnect fuel pump relay, fuel pump harness connector and ECM harness connector.
2. Turn ignition switch "ON".
3. Turn fuel pump relay "ON" and "OFF" in "ACTIVE TEST" mode with CONSULT and check operating sound.

NG → Replace fuel pump relay.

OR

Refer to "COMPONENT INSPECTION" on next page.

OK ↓

CHECK COMPONENT
(Fuel pump).
Refer to "COMPONENT INSPECTION" on next page.

NG → Replace fuel pump.

OK ↓

Disconnect and reconnect harness connectors in the circuit. Then retest.

Trouble is not fixed. ↓

Check ECM pin terminals for damage and check the connection of ECM harness connector. Reconnect ECM harness connector and retest.

↓

INSPECTION END

Simpo PDF Merge and Split Unregistered Version - http://www.simpopdf.com

Fuel Pump (Cont'd)

COMPONENT INSPECTION

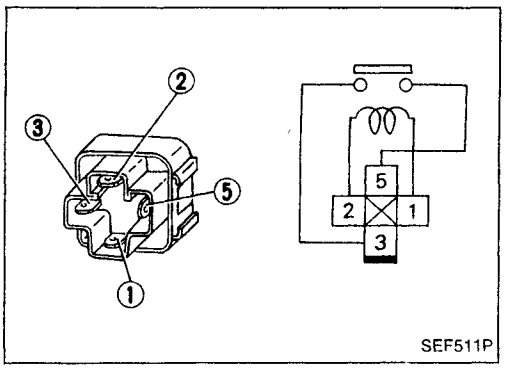

Fuel pump relay

Check continuity between terminals ③ and ⑤.

Conditions	Continuity
12V direct current supply between terminals ① and ②	Yes
No current supply	No

If NG, replace relay.

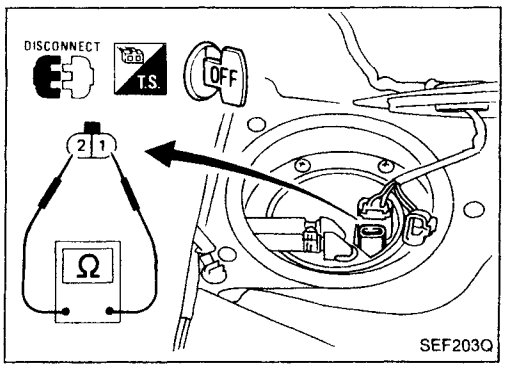

Fuel pump

1. Disconnect fuel pump harness connector.
2. Check resistance between terminals ① and ②.
   Resistance: 0.2 - 5.0Ω [at 25°C (77°F)]

   If NG, replace fuel pump.

EC

Simpo PDF Merge and Split Unregistered Version - http://www.simpopdf.com

Idle Air Control Valve (IACV)-Air Regulator

SYSTEM DESCRIPTION

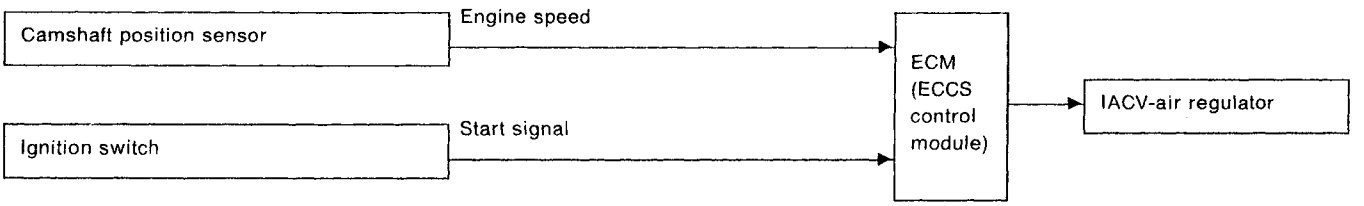

The IACV-air regulator is controlled by the ECM at the same time as fuel pump ON-OFF control.

Condition	IACV-air regulator operation
Ignition switch is turned to "ON"	Operates for 5 seconds
Engine running and cranking	Operates
When engine is stopped	OFF in 1 second
Except as shown above	OFF

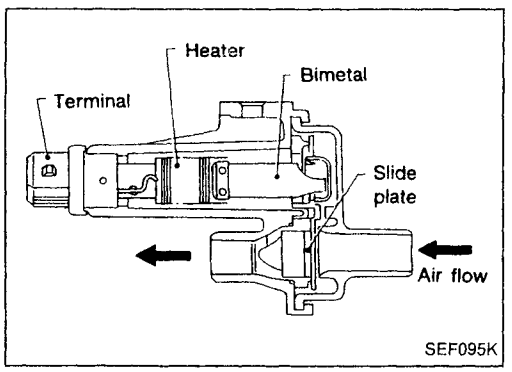

COMPONENT DESCRIPTION

IACV-air regulator provides an air bypass when the engine is cold for a fast idle during warm-up.
A bimetal, heater and rotary shutter are built into the IACV-air regulator. When the bimetal temperature is low, the air bypass port opens. As the engine starts and electric current flows through a heater, the bimetal begins to turn the shutter to close the bypass port. The air passage remains closed until the engine stops and the bimetal temperature drops.

Simpo PDF Merge and Split Unregistered Version - http://www.simpopdf.com

Idle Air Control Valve (IACV)-Air Regulator (Cont'd)

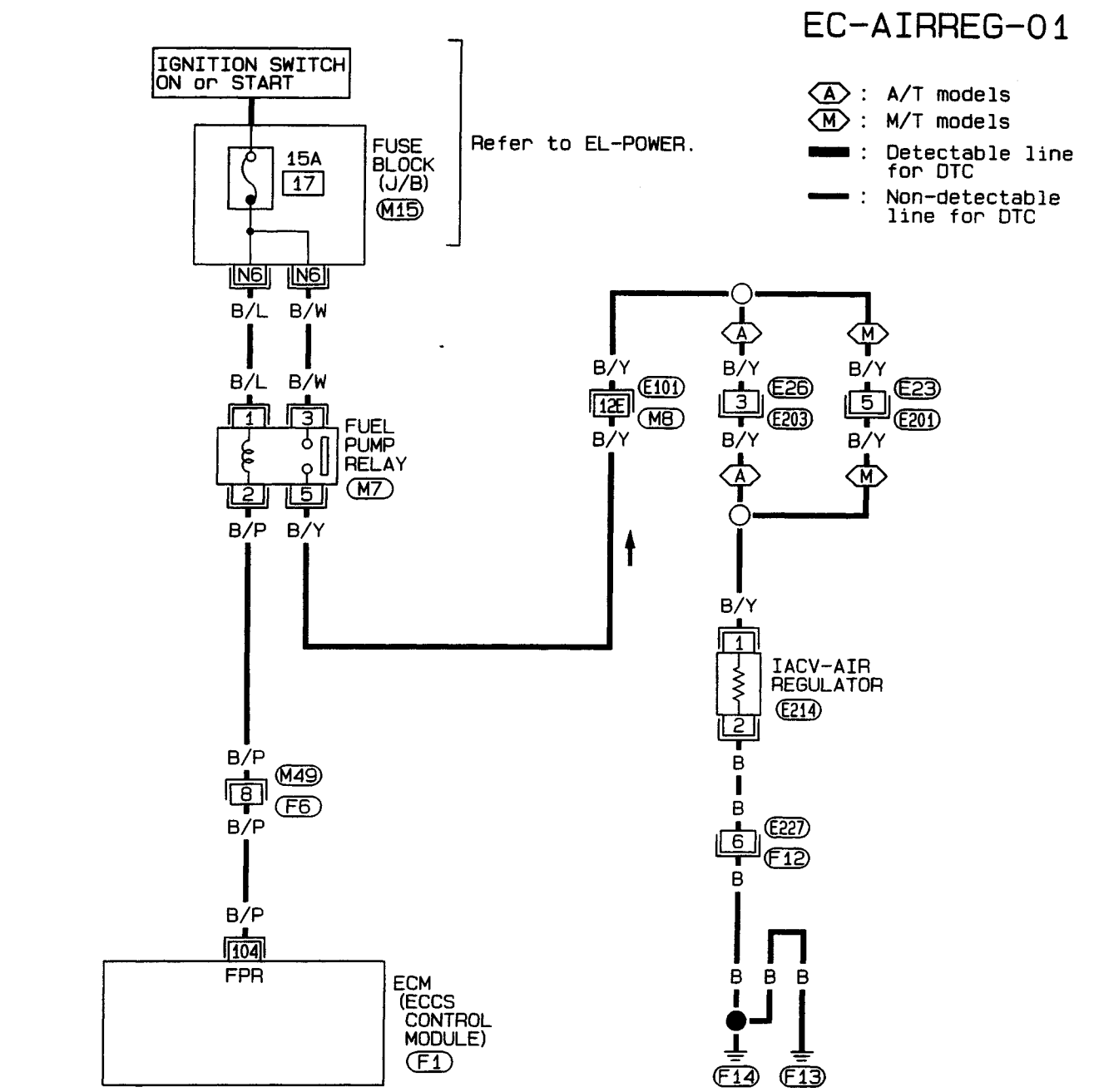

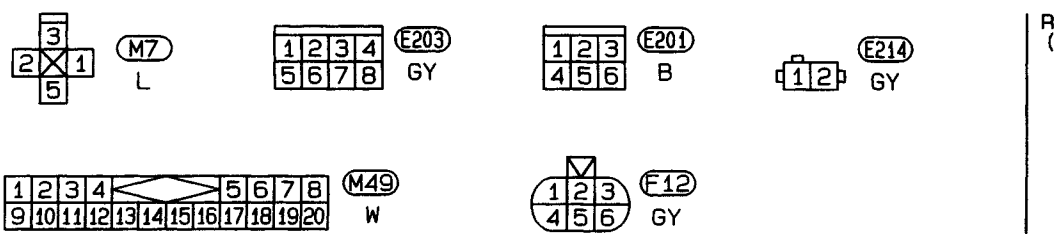

Refer to last page (Foldout page).

M8, E101

M15

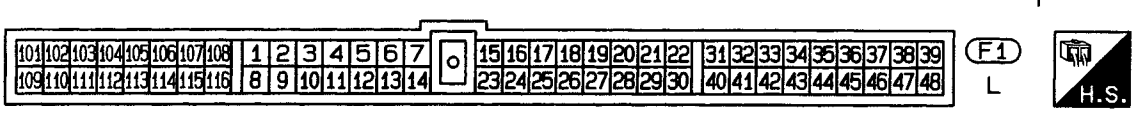

HEC013

Simpo PDF Merge and Split Unregistered Version - http://www.simpopdf.com

Idle Air Control Valve (IACV)-Air Regulator (Cont'd)

DIAGNOSTIC PROCEDURE

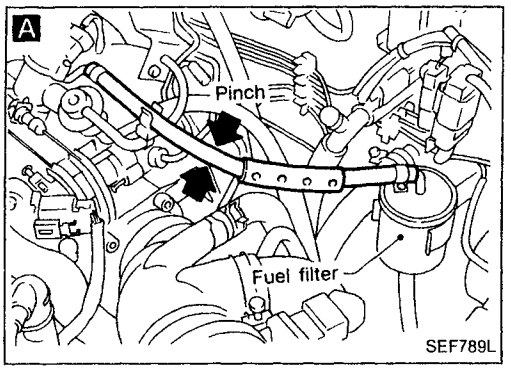

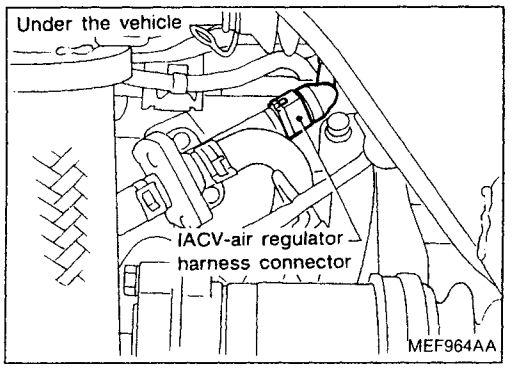

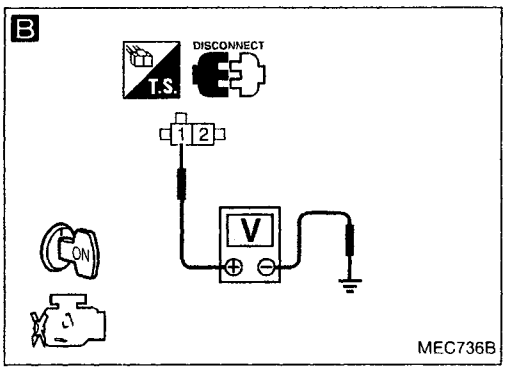

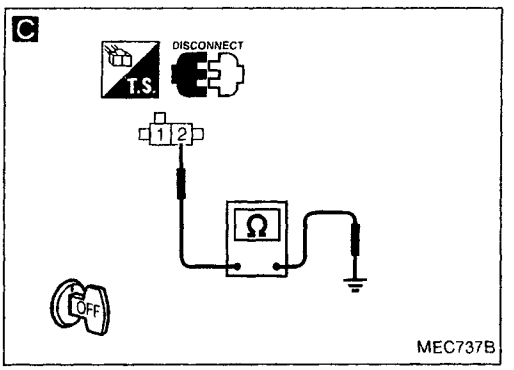

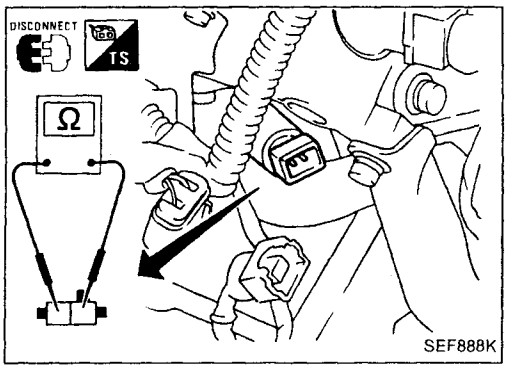

INSPECTION START

A

CHECK CONTROL FUNCTION.
1. Turn ignition switch "ON".
2. Pinch fuel feed hose with fingers.
   Fuel pressure pulsation should be felt on the fuel feed hose for 5 seconds after ignition switch is turned "ON".

NG → Check fuel pump control circuit. (See page EC-327.)

OK ↓

B

CHECK POWER SUPPLY.
1. Turn ignition switch "OFF".
2. Disconnect IACV-air regulator harness connector.
3. Turn ignition switch "ON".
4. Check voltage between terminal ① and ground.
   Battery voltage should exist for 5 seconds after ignition switch is turned "ON".

NG → Check the following.
- Harness connectors (M8), (E101)
- Harness connectors (E23), (E201) (M/T models)
- Harness connectors (E26), (E203) (A/T models)
- Harness for open or short between IACV-air regulator and fuel pump relay

If NG, repair harness or connectors.

OK ↓

C

CHECK GROUND CIRCUIT.
1. Turn ignition switch "OFF".
2. Check harness continuity between terminal ② and body ground.
   Continuity should exist.
   If OK, check harness for short.

NG → Check the following.
- Harness connectors (F12), (E227)
- Harness for open or short between IACV-air regulator and body ground

If NG, repair harness or connectors.

OK ↓

CHECK COMPONENT (IACV-air regulator).
Refer to "COMPONENT INSPECTION" below.

NG → Replace IACV-air regulator.

OK ↓

INSPECTION END

COMPONENT INSPECTION

IACV-air regulator

Disconnect IACV-air regulator harness connector.

- Check IACV-air regulator resistance.
  Resistance:
  Approximately 70 - 80Ω [at 25°C (77°F)]
- Check IACV-air regulator for clogging.

Simpo PDF Merge and Split Unregistered Version - http://www.simpopdf.com

Idle Air Control Valve (IACV) — Auxiliary Air Control (AAC) Valve

SYSTEM DESCRIPTION

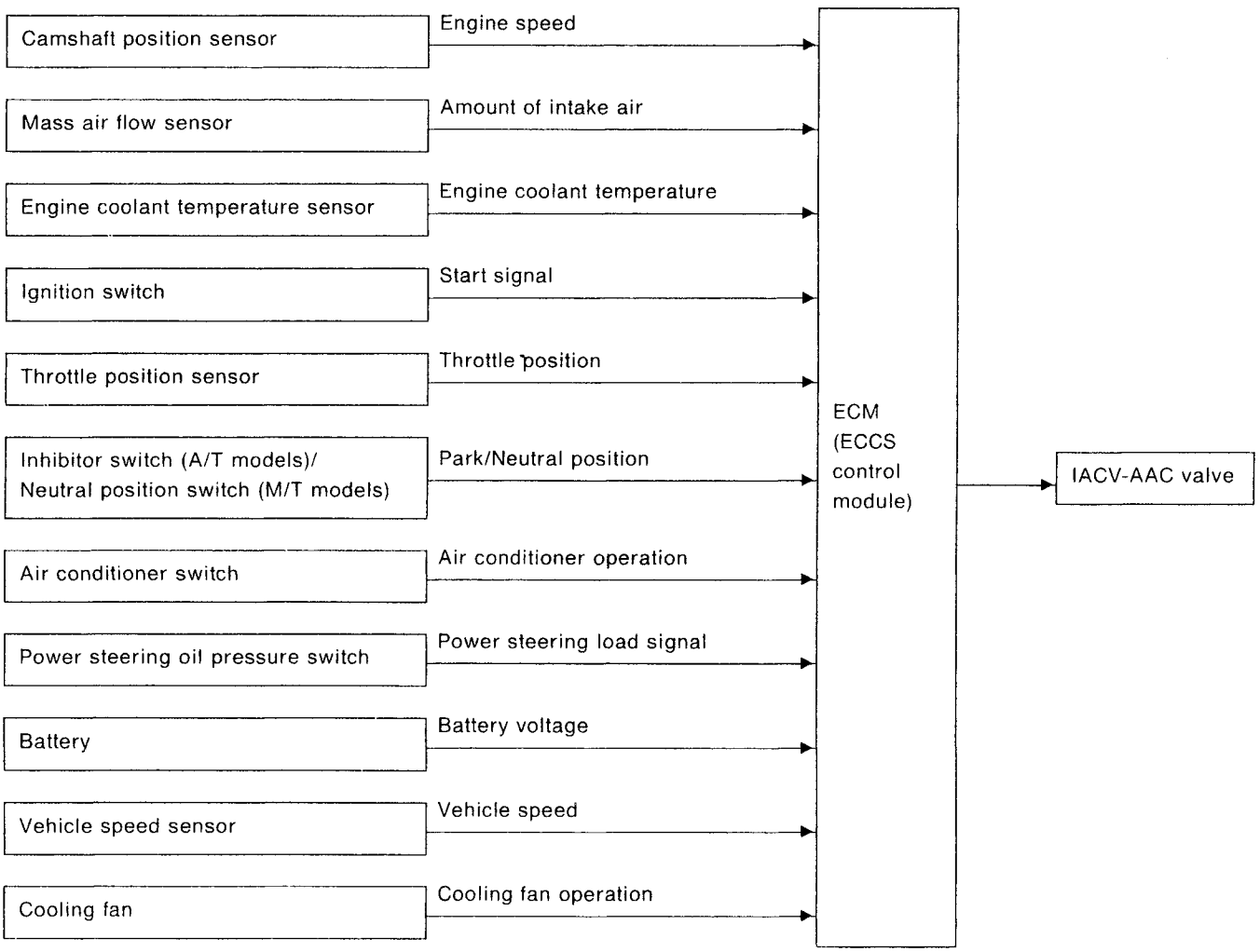

This system automatically controls engine idle speed to a specified level. Idle speed is controlled through fine adjustment of the amount of air which bypasses the throttle valve via IACV-AAC valve. The IACV-AAC valve repeats ON/OFF operation according to the signal sent from the ECM. The camshaft position sensor detects the actual engine speed and sends a signal to the ECM. The ECM then controls the ON/OFF time of the IACV-AAC valve so that engine speed coincides with the target value memorized in ECM. The target engine speed is the lowest speed at which the engine can operate steadily. The optimum value stored in the ECM is determined by taking into consideration various engine conditions, such as during warm up, deceleration, and engine load (air conditioner, power steering and cooling fan operation).

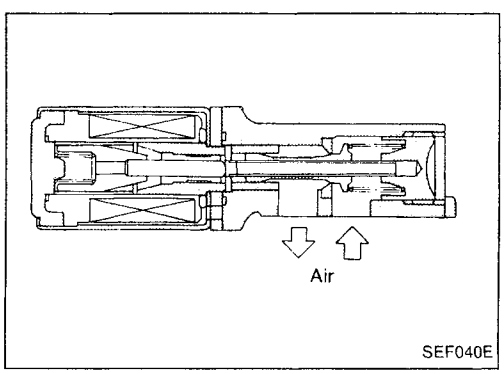

COMPONENT DESCRIPTION

IACV-AAC valve

The IACV-AAC valve is moved by ON/OFF pulses from the ECM. The longer the ON pulse, the greater the amount of air that will flow through the valve. The more air that flows through the valve, the higher the idle speed.

Simpo PDF Merge and Split Unregistered Version - http://www.simpopdf.com

Idle Air Control Valve (IACV) — Auxiliary Air Control (AAC) Valve (Cont'd)

EC-AAC/V-01

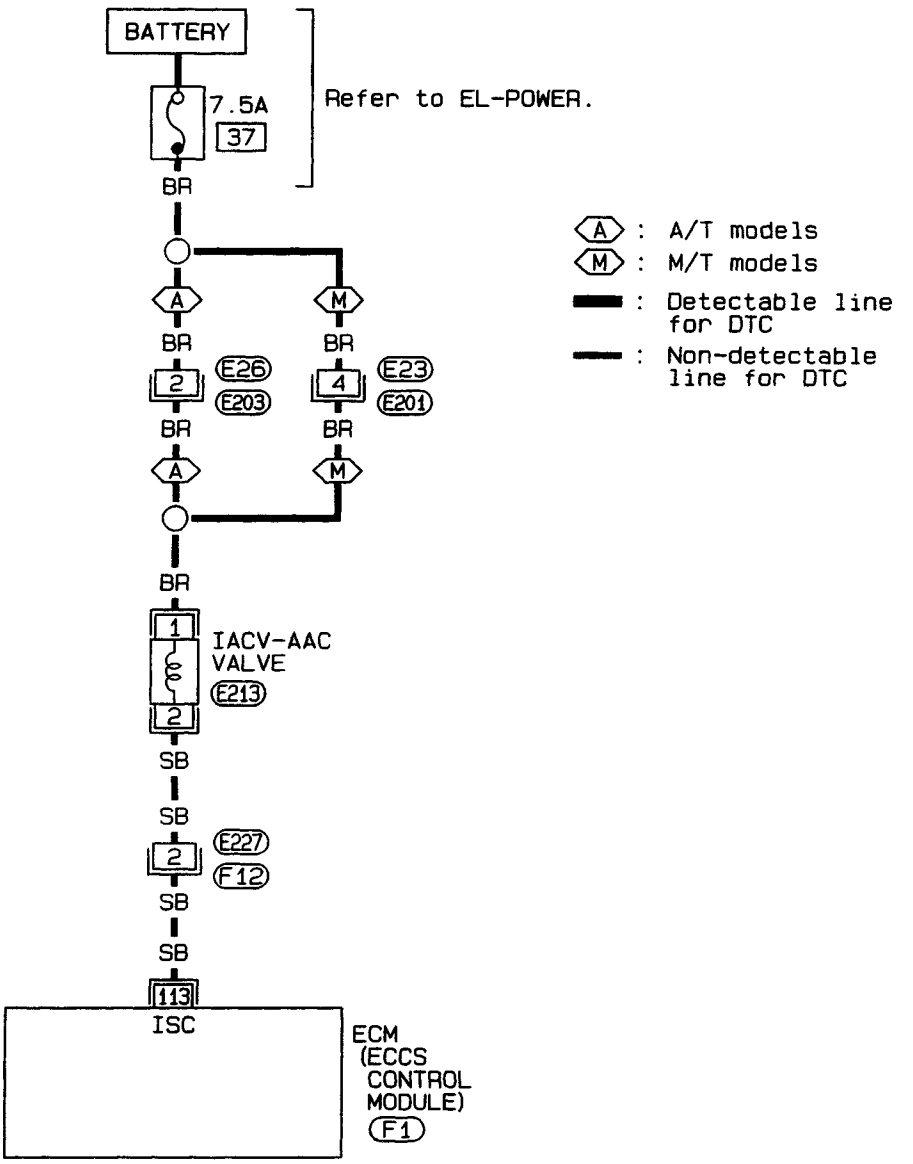

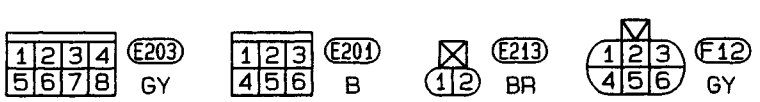

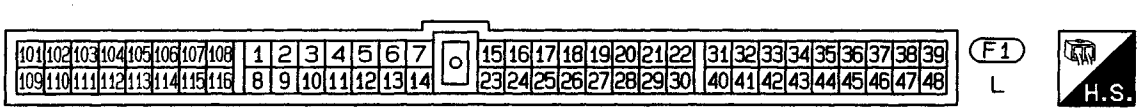

HEC015

Simpo PDF Merge and Split Unregistered Version - http://www.simpopdf.com

Idle Air Control Valve (IACV) — Auxiliary Air Control (AAC) Valve (Cont'd)

DIAGNOSTIC PROCEDURE

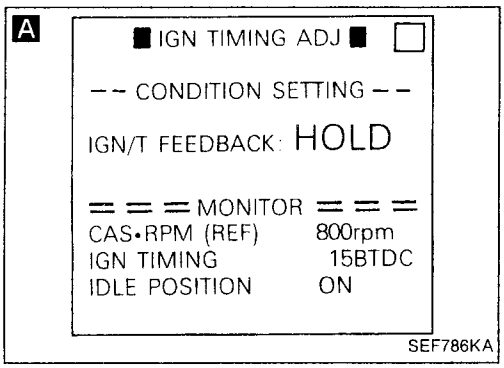

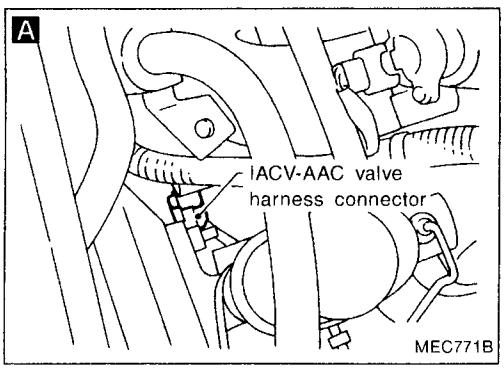

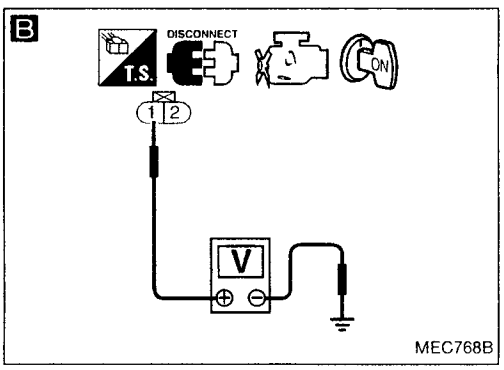

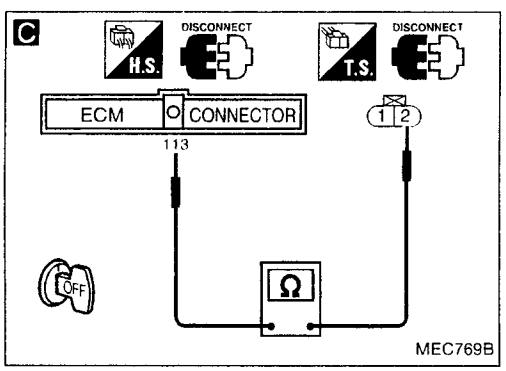

INSPECTION START

A

CHECK OVERALL FUNCTION.
1. Start engine and warm it up sufficiently.
2. Check idle speed.
   800 ± 50 rpm
   If NG, adjust idle speed. (Refer to page EC-243.)
3. ● Perform "IGN TIMING ADJ" in "WORK SUPPORT" mode with CONSULT.
   ● Disconnect IACV-AAC valve harness connector.
4. Make sure that idle speed drops.

Drops → INSPECTION END

Does not drop ↓

B

CHECK POWER SUPPLY.
1. Stop engine.
2. Disconnect IACV-AAC valve harness connector.
3. Turn ignition switch "ON".
4. Check voltage between terminal ① and ground with CONSULT or tester.
   Voltage: Battery voltage

NG → Check the following.
- Harness connectors E23, E201 (M/T models)
- Harness connectors E26, E203 (A/T models)
- 7.5A fuse
- Harness for open or short between IACV-AAC valve harness connector and fuse

If NG, repair harness or connectors.

OK ↓

C

CHECK OUTPUT SIGNAL CIRCUIT.
1. Disconnect ECM harness connector.
2. Check harness continuity between ECM terminal 113 and terminal ②.
   Continuity should exist.
   If OK, check harness for short.

NG → Check the following.
- Harness connectors F12, E227
- Harness for open or short between ECM and IACV-AAC valve

If NG, repair harness or connectors.

OK ↓

CHECK COMPONENT (IACV-AAC valve).
Refer to "COMPONENT INSPECTION" on next page.

NG → Replace IACV-AAC valve.

OK ↓

Disconnect and reconnect harness connectors in the circuit. Then retest.

Trouble is not fixed. ↓

Check ECM pin terminals for damage and check the connection of ECM harness connector. Reconnect ECM harness connector and retest.

INSPECTION END

EC

Simpo PDF Merge and Split Unregistered Version - http://www.simpopdf.com

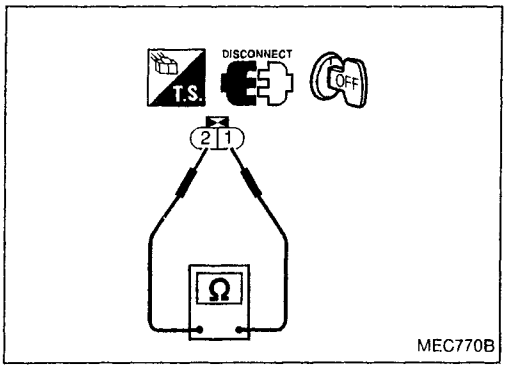

Idle Air Control Valve (IACV) — Auxiliary Air Control (AAC) Valve (Cont'd)

COMPONENT INSPECTION

IACV-AAC valve

Disconnect IACV-AAC valve harness connector.

- Check IACV-AAC valve resistance.
  Resistance:
  Approximately 10Ω [at 25°C (77°F)]
- Check plunger for seizing or sticking.
- Check for broken spring.

Simpo PDF Merge and Split Unregistered Version - http://www.simpopdf.com

Idle Air Control Valve (IACV)-FICD Solenoid Valve

EC-FICD-01

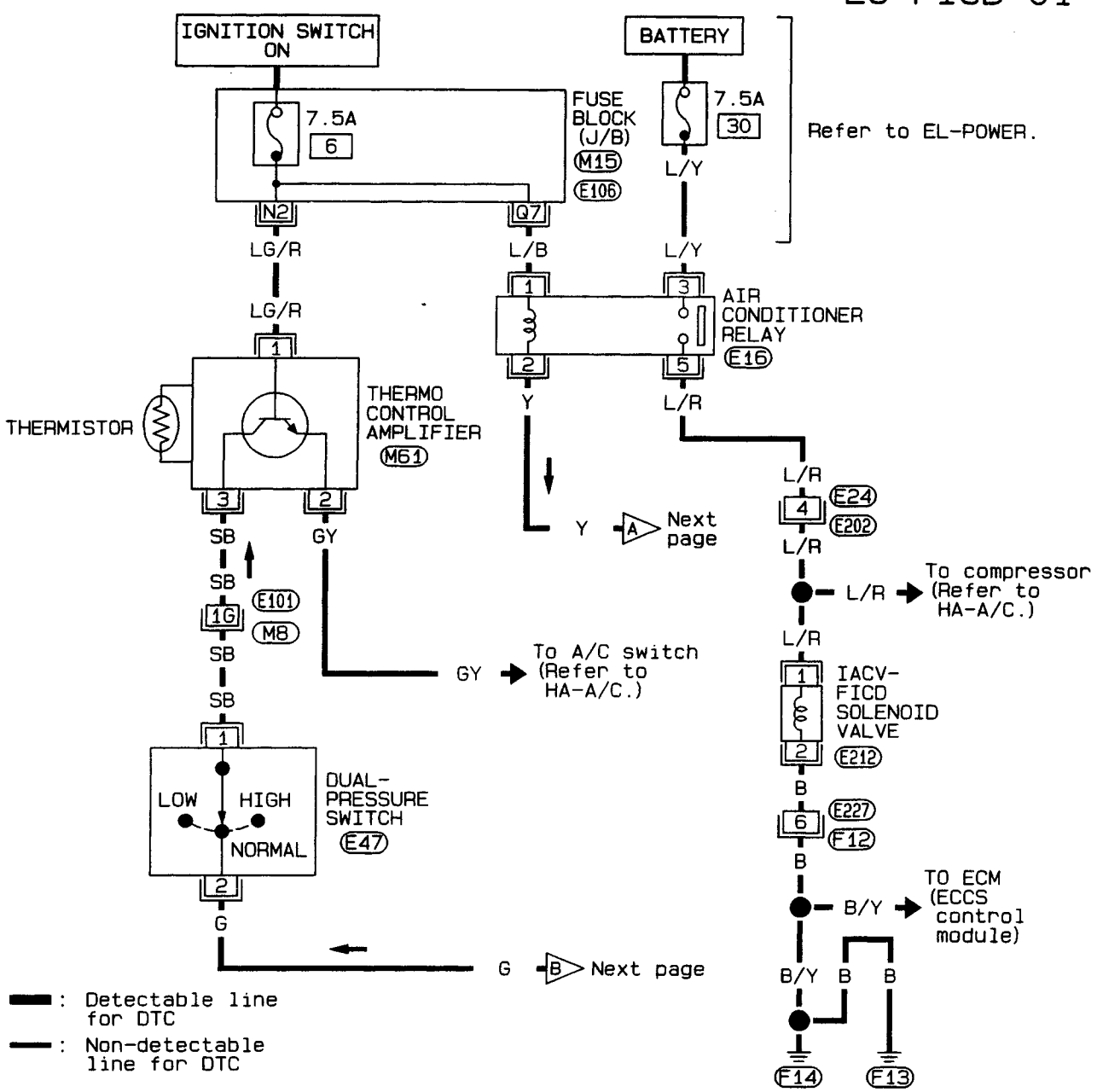

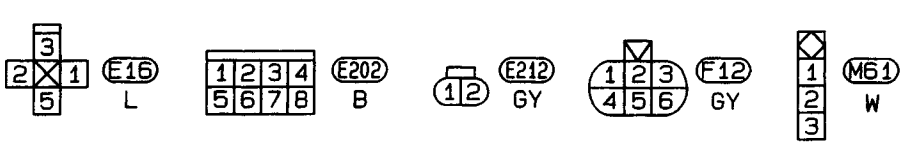

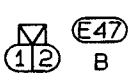

Refer to last page (Foldout page).

M8, E101
M15, E106

HEC021

Simpo PDF Merge and Split Unregistered Version - http://www.simpopdf.com

Idle Air Control Valve (IACV)-FICD Solenoid Valve (Cont'd)

EC-FICD-02

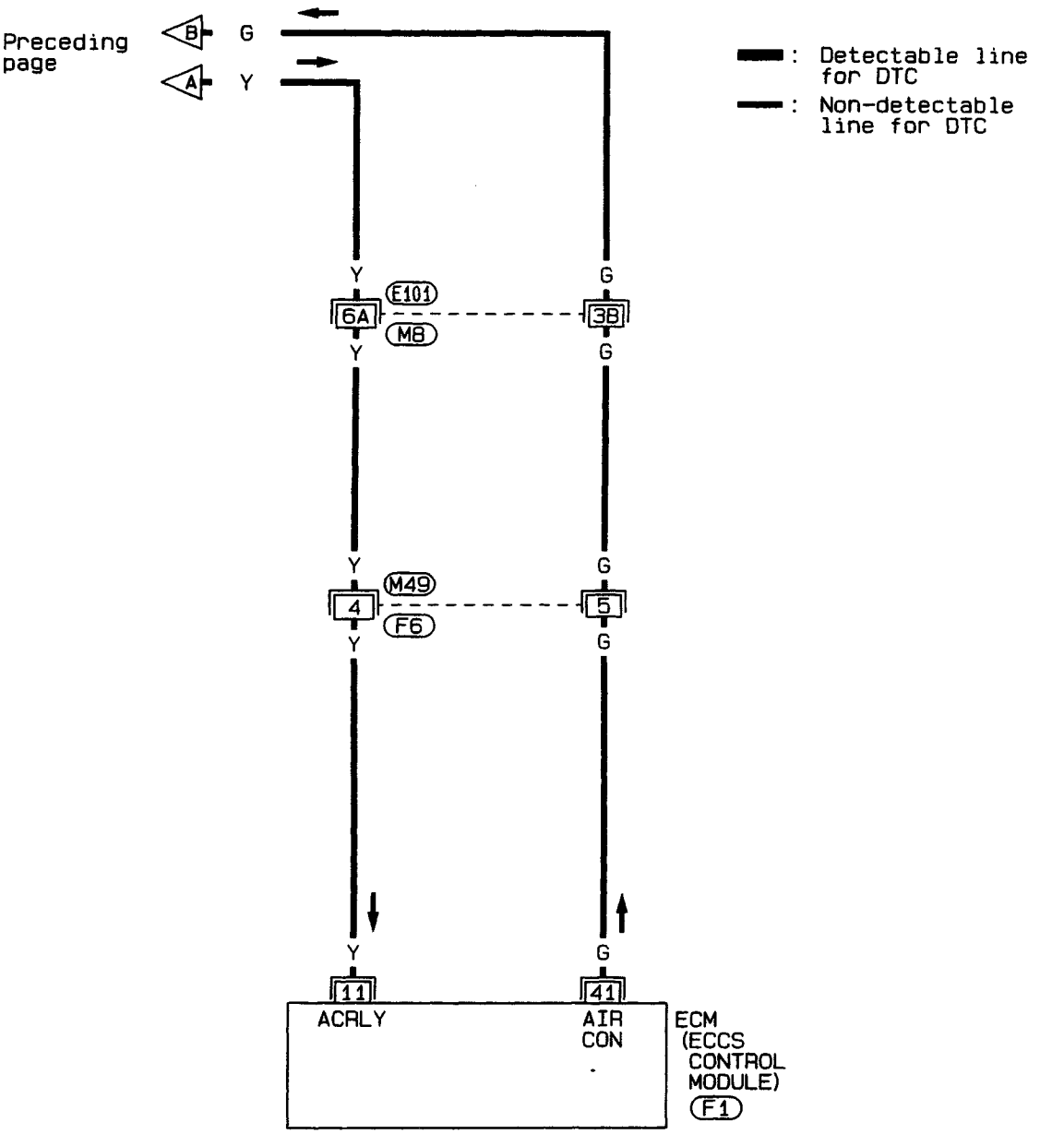

Refer to last page (Foldout page).

M8, E101

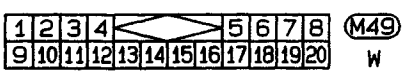

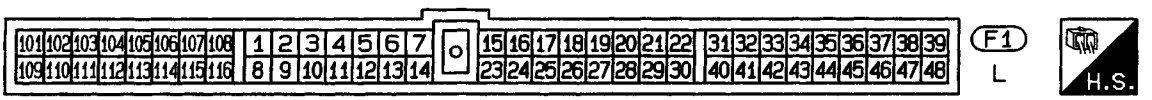

HEC022

Simpo PDF Merge and Split Unregistered Version - http://www.simpopdf.com

Idle Air Control Valve (IACV)-FICD Solenoid Valve (Cont'd)

COMPONENT DESCRIPTION

When the air conditioner is on, the IACV-FICD solenoid valve supplies additional air to adjust to the increased load.

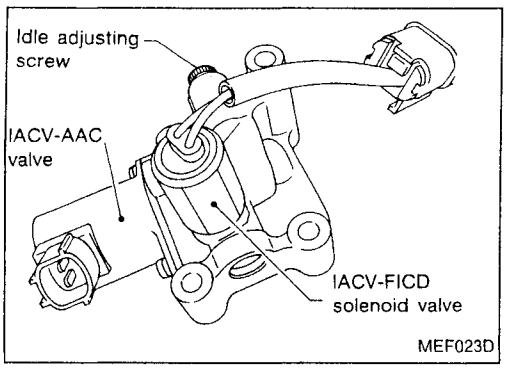

EC

DIAGNOSTIC PROCEDURE

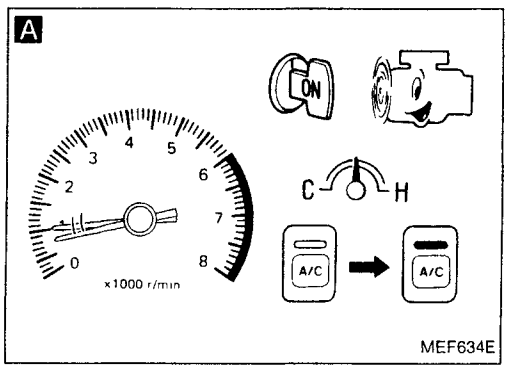

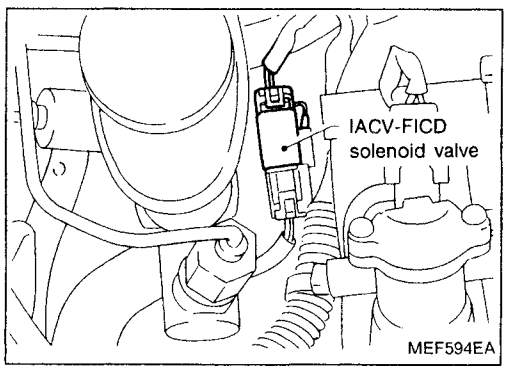

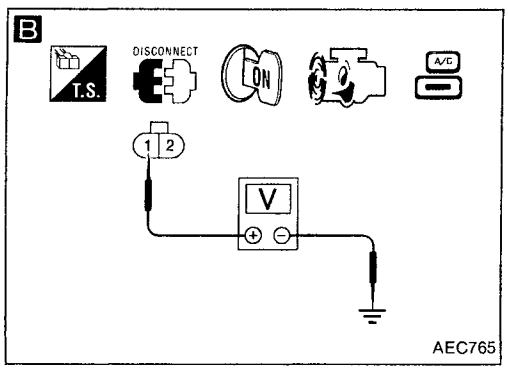

INSPECTION START

A

CHECK OVERALL FUNCTION.
1. Start engine and warm it up sufficiently.
2. Check idle speed.
   800 ± 50 rpm
   If NG, adjust idle speed.
3. Turn air conditioner switch and blower fan switch "ON".
4. Recheck idle speed.
   850 rpm or more

OK → INSPECTION END

NG

Check if air conditioner compressor functions normally.

NG → Refer to "TROUBLE DIAGNOSES" in HA section.

OK

B

CHECK POWER SUPPLY.
1. Stop engine.
2. Disconnect IACV-FICD solenoid valve harness connector.
3. Start engine, then turn air conditioner switch and blower fan "ON".
4. Check voltage between terminal ① and ground with CONSULT or tester.
   Voltage: Battery voltage

NG → Check the following.
- Harness connectors (E24), (E202)
- Harness for open or short between IACV-FICD solenoid valve harness connector and air conditioner relay

If NG, repair harness or connectors.

OK

Ⓐ

Simpo PDF Merge and Split Unregistered Version - http://www.simpopdf.com

Idle Air Control Valve (IACV)-FICD Solenoid Valve (Cont'd)

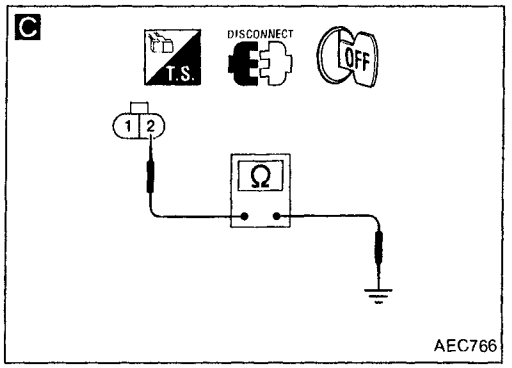

Ⓐ

C

CHECK GROUND CIRCUIT.
1. Turn ignition switch "OFF".
2. Check harness continuity between terminal ② and body ground.
   Continuity should exist.
   If OK, check harness for short.

NG → Check the following.
- Harness connectors (E227), (F12)
- Harness for open or short between IACV-FICD solenoid valve and engine ground

If NG, repair harness or connectors.

OK ↓

CHECK COMPONENT (IACV-FICD solenoid valve). Refer to "COMPONENT INSPECTION" below.

NG → Replace IACV-FICD solenoid valve.

OK ↓

Disconnect and reconnect harness connectors in the circuit. Then retest.

Trouble is not fixed. ↓

Check ECM pin terminals for damage and check the connection of ECM harness connector. Reconnect ECM harness connector. Then retest.

↓

INSPECTION END

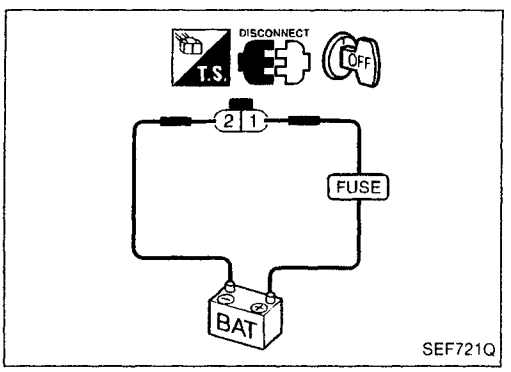

COMPONENT INSPECTION

IACV-FICD solenoid valve

Disconnect IACV-FICD solenoid valve harness connector.

- Check for clicking sound when applying 12V direct current to terminals.

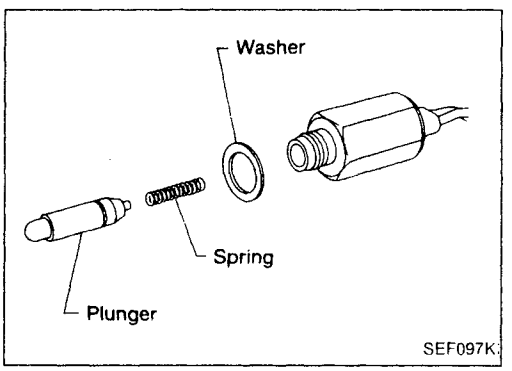

- Check plunger for seizing or sticking.
- Check for broken spring.

Simpo PDF Merge and Split Unregistered Version - http://www.simpopdf.com

Cooling Fan Control

SYSTEM DESCRIPTION

Cooling fan control

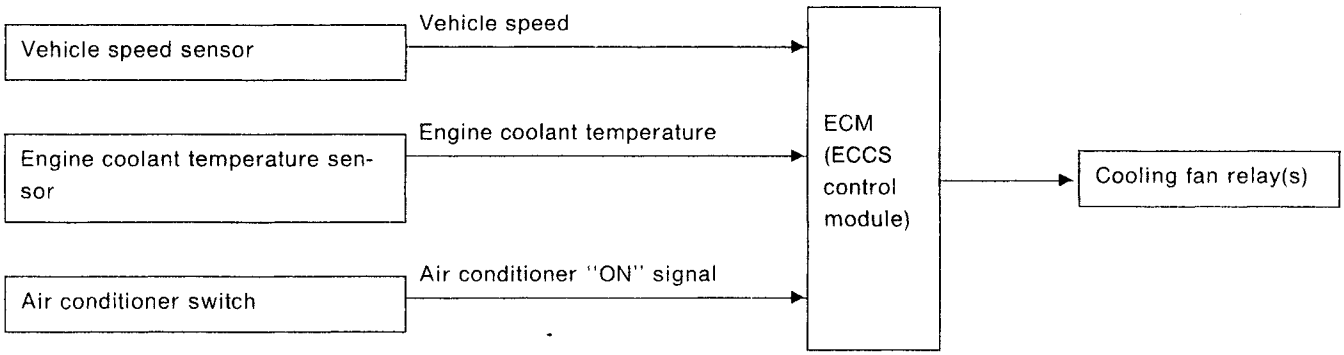

The ECM controls the cooling fan corresponding to the vehicle speed, engine coolant temperature, and air conditioner ON signal. The control system has 3-step control [HIGH/LOW/OFF] on A/T models and 2-step control [ON/OFF] on M/T models.

Operation

For A/T models

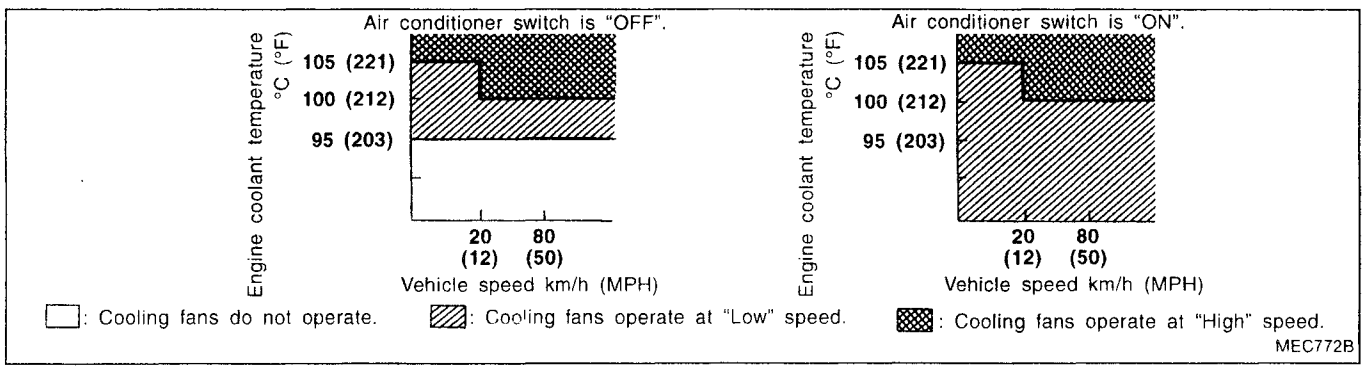

For M/T models

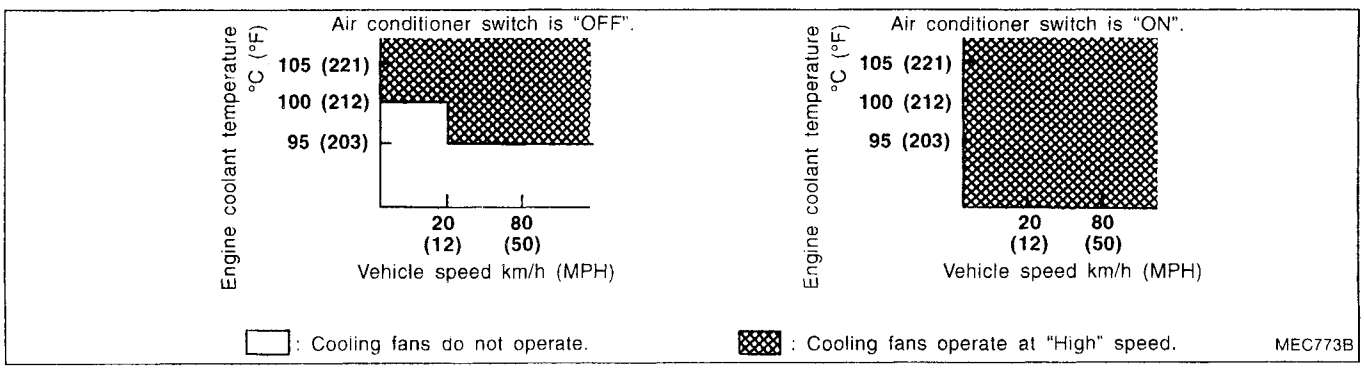

Simpo PDF Merge and Split Unregistered Version - http://www.simpopdf.com

Cooling Fan Control (Cont'd)

M/T models

EC-COOL/F-01

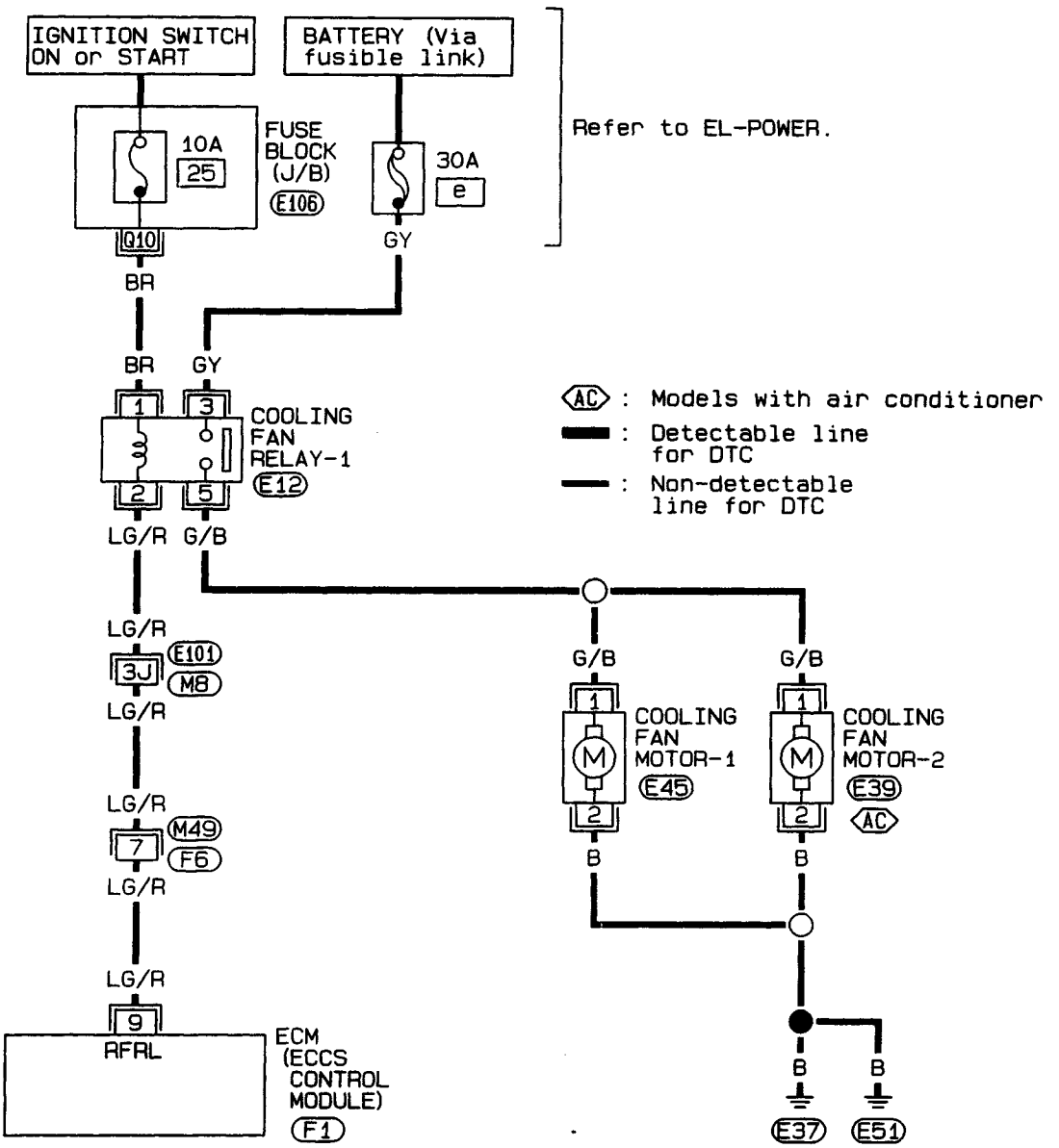

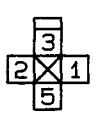

E12
L

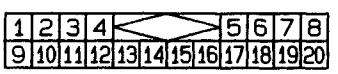

M49
W



E39, E45
GY GY

Refer to last page (Foldout page).

M8, E101
E106

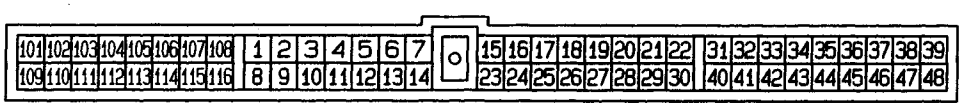

F1
L

H.S.

HEC016

Simpo PDF Merge and Split Unregistered Version - http://www.simpopdf.com

Cooling Fan Control (Cont'd)

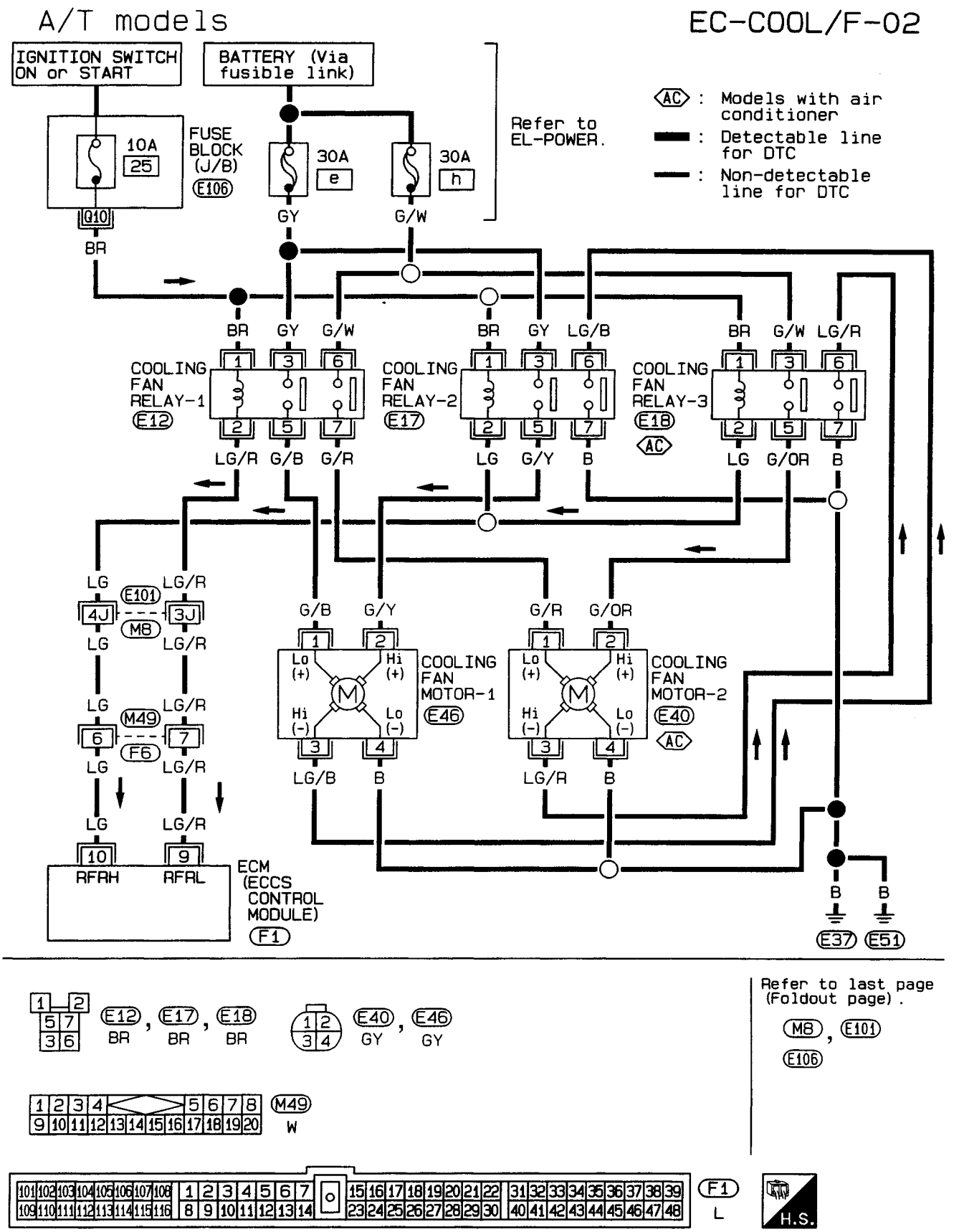

HEC017

Simpo PDF Merge and Split Unregistered Version - http://www.simpopdf.com

Cooling Fan Control (Cont'd)

A

■ COOLING FAN CIRCUIT ■

DOES

COOLING FAN

ROTATE AND STOP

EVERY 3 SECONDS ?

NEXT | NO | YES

MEF311F

A

■ ACTIVE TEST ■

COOLING FAN OFF

= = = MONITOR = = =

COOLAN TEMP/S 88°C

HI | LOW | OFF

MEF313F

A

With air conditioner

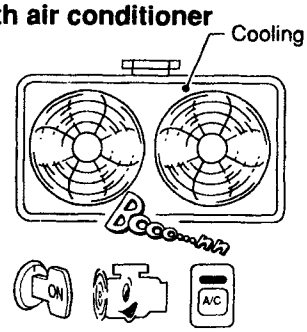

Without air conditioner

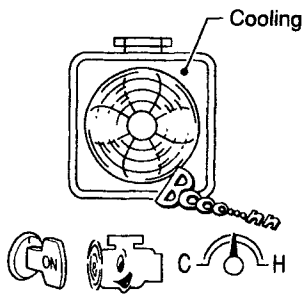

MEF277G

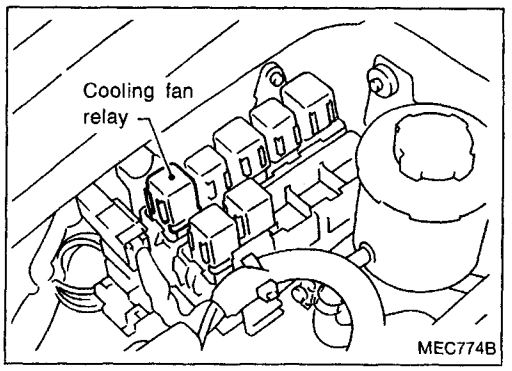

MEC774B

M/T models

INSPECTION START

A

CHECK OVERALL FUNCTION.

1. Turn ignition switch "ON".
2. Perform "COOLING FAN CIRCUIT" in "FUNCTION TEST" mode with CONSULT.

OR

1. Turn ignition switch "ON".
2. Select "COOLING FAN" in "ACTIVE TEST" mode with CONSULT.

OR

With air conditioner

1. Start engine.
2. Set temperature lever at full cold position.
3. Turn air conditioner switch "ON".
4. Turn blower fan switch "ON".
5. Run engine at idle for a few minutes with air conditioner operating.
6. Make sure that cooling fan operates.

Without air conditioner

1. Start engine.
2. Keep engine speed at about 2,000 rpm until engine is warmed up sufficiently.
3. Make sure that cooling fan begins to operate during warm-up.

OK → INSPECTION END

NG

B

CHECK POWER SUPPLY.

1. Turn air conditioner switch "OFF".
2. Turn blower fan switch "OFF". (Step 1 and 2 are only performed for models with air conditioner.)
3. Stop engine.
4. Disconnect cooling fan relay.
5. Turn ignition switch "ON".
6. Check voltage between terminals ①, ③ and ground.

Voltage: Battery voltage

NG →

Check the following.

- 30A fusible link
- 10A fuse
- Harness for open or short between fuse and cooling fan relay
- Harness for open or short between battery and cooling fan relay

If NG, repair harness or connectors.

OK

Ⓐ

Simpo PDF Merge and Split Unregistered Version - http://www.simpopdf.com

Cooling Fan Control (Cont'd)

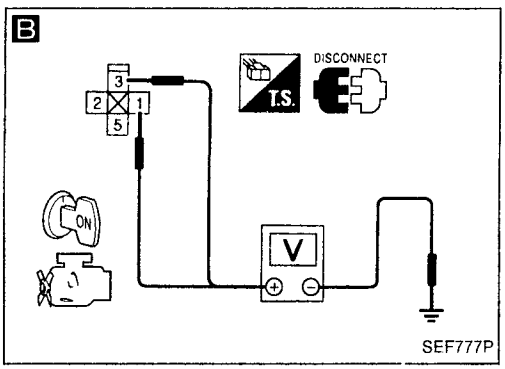

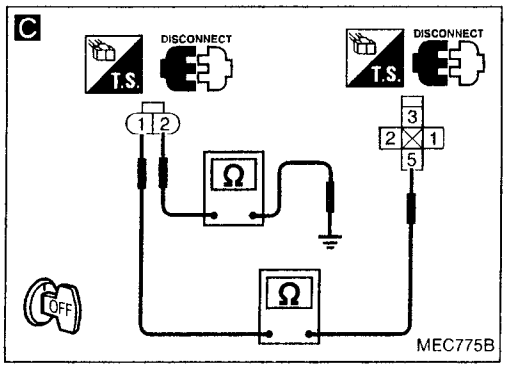

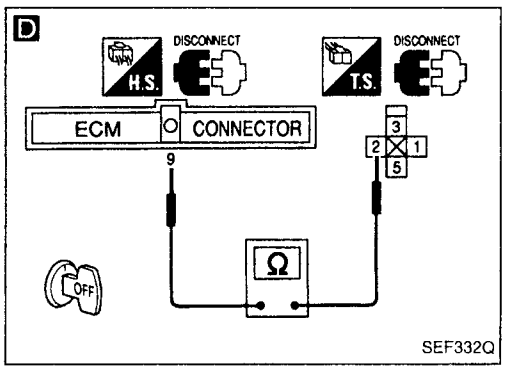

Ⓐ

C

CHECK GROUND CIRCUIT.
1. Turn ignition switch "OFF".
2. Disconnect cooling fan motor-1 harness connector and cooling fan motor-2 harness connector.
3. Check harness continuity between terminal ① and terminal ⑤, terminal ② and body ground.
Continuity should exist.

NG → Repair harness or connectors.

OK ↓

D

CHECK OUTPUT SIGNAL CIRCUIT.
1. Disconnect ECM harness connector.
2. Check harness continuity between ECM terminal ⑨ and terminal ②.
Continuity should exist.
If OK, check harness for short.

NG → Check the following.
- Harness connectors (F6), (M49)
- Harness connectors (M8), (E101)
- Harness for open or short between ECM and cooling fan relay

If NG, repair harness or connectors.

OK ↓

CHECK COMPONENT (Cooling fan relay).
Refer to "COMPONENT INSPECTION", EC-353.

NG → Replace cooling fan relay.

OK ↓

CHECK COMPONENTS (Cooling fan motors).
Refer to "COMPONENT INSPECTION", EC-353.

NG → Replace cooling fan motors.

OK ↓

Disconnect and reconnect harness connectors in the circuit. Then retest.

Trouble is not fixed. ↓

Check ECM pin terminals for damage and check the connection of ECM harness connector. Reconnect ECM harness connector and retest.

↓

INSPECTION END

EC

Simpo PDF Merge and Split Unregistered Version - http://www.simpopdf.com

Cooling Fan Control (Cont'd)

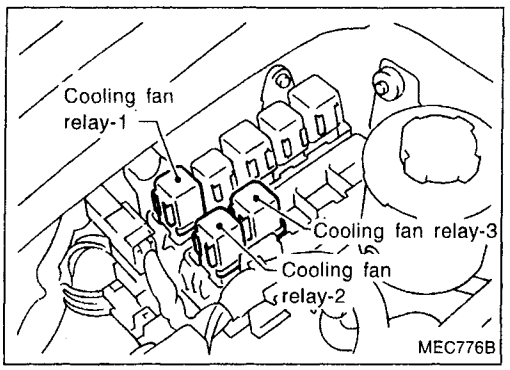

E

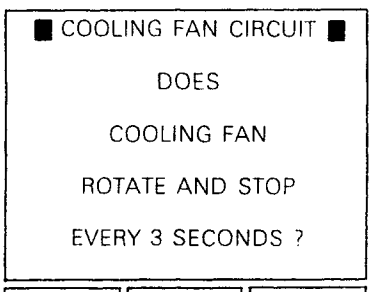

E

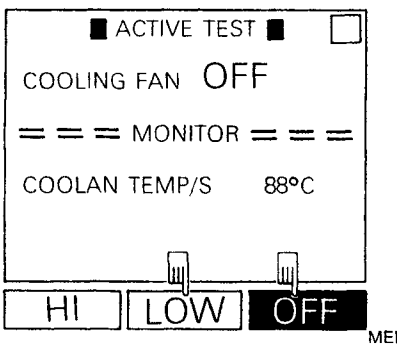

E

With air conditioner

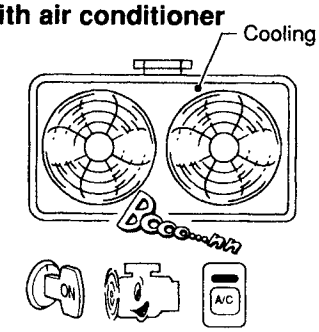

Without air conditioner

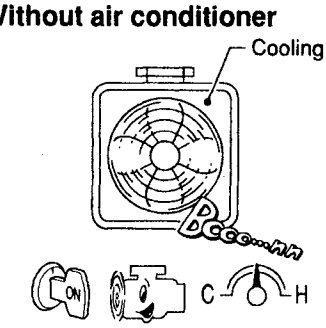

A/T models

INSPECTION START

E

CHECK COOLING FAN LOW SPEED OPERATION.

1. Disconnect cooling fan relays-2 and -3.
2. Turn ignition switch "ON".
3. Perform "COOLING FAN CIRCUIT" in "FUNCTION TEST" mode with CONSULT.

OR

2. Turn ignition switch "ON".
3. Perform "COOLING FAN" in "ACTIVE TEST" mode with CONSULT.

OR

With air conditioner

2. Start engine.
3. Set temperature lever at full cold position.
4. Turn air conditioner switch "ON".
5. Turn blower fan switch "ON".
6. Run engine at idle for a few minutes with air conditioner operating.
7. Make sure that cooling fan operates at low speed.

Without air conditioner

2. Start engine.
3. Keep engine speed at about 2,000 rpm until engine is warmed up sufficiently.
4. Make sure that cooling fan begins to operate at low speed during warm-up.

NG → Check cooling fan low speed control circuit. (Go to PROCEDURE A, EC-350.)

OK → Ⓑ

Simpo PDF Merge and Split Unregistered Version - http://www.simpopdf.com

Cooling Fan Control (Cont'd)

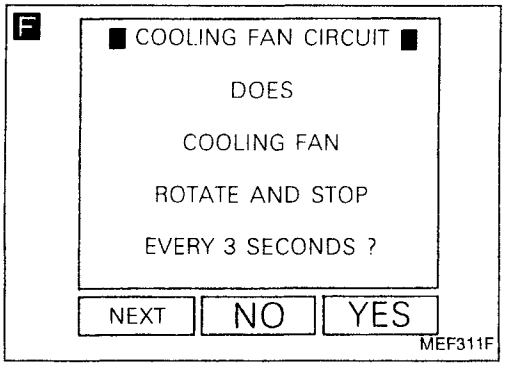

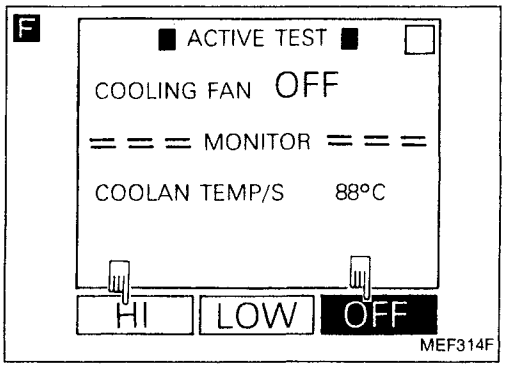

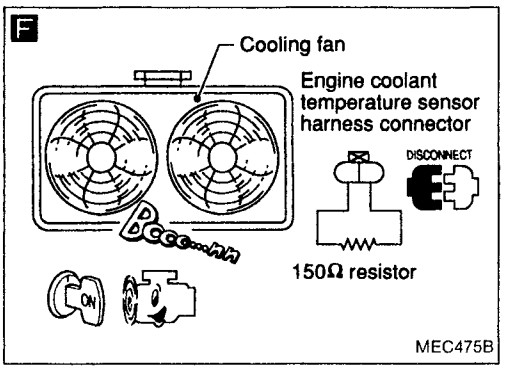

Ⓑ

F

CHECK COOLING FAN HIGH SPEED OPERATION.

1. Turn ignition switch "OFF".
2. Reconnect cooling fan relays-2 and -3.
3. Disconnect cooling fan relay-1.
4. Turn ignition switch "ON".
5. Perform "COOLING FAN CIRCUIT" in "FUNCTION TEST" mode with CONSULT.

OR

4. Turn ignition switch "ON".
5. Perform "COOLING FAN" in "ACTIVE TEST" mode with CONSULT.

OR

4. Turn air conditioner switch and blower fan switch "OFF" (Models with air conditioner).
5. Disconnect engine coolant temperature sensor harness connector.
6. Connect 150Ω resistor to engine coolant temperature sensor harness connector.
7. Restart engine and make sure that cooling fan operates at higher speed than low speed.

NG → Check cooling fan high speed control circuit. (Go to PROCEDURE B, EC-351.)

OK ↓

INSPECTION END

EC

Simpo PDF Merge and Split Unregistered Version - http://www.simpopdf.com

Cooling Fan Control (Cont'd)

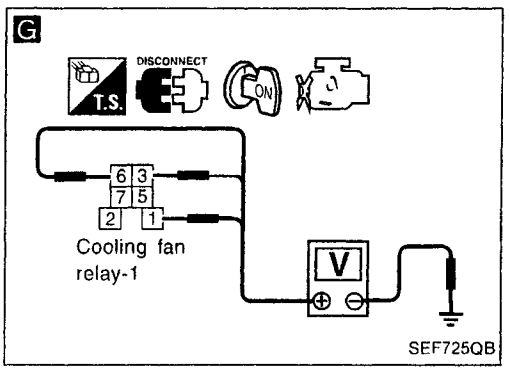

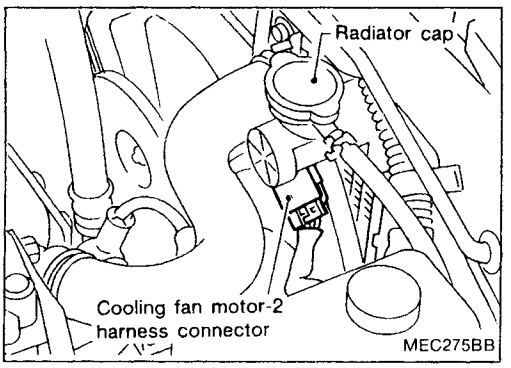

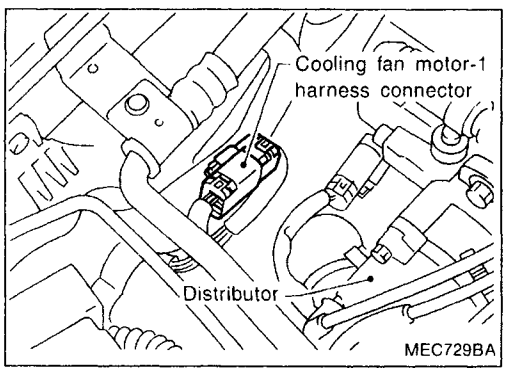

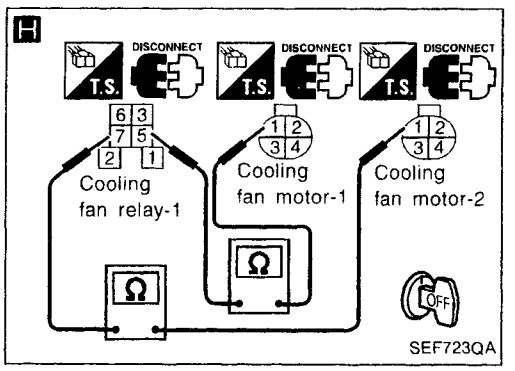

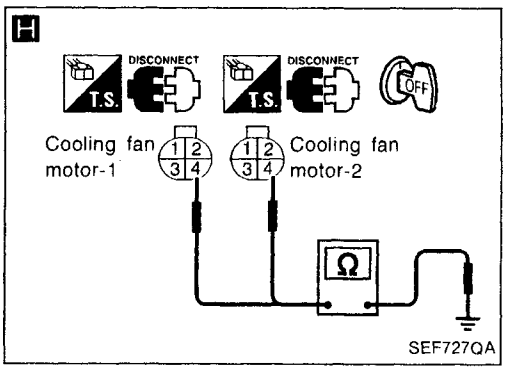

PROCEDURE A

INSPECTION START

G

CHECK POWER SUPPLY.
1. Turn ignition switch "OFF".
2. Disconnect cooling fan relay-1.
3. Turn ignition switch "ON".
4. Check voltage between terminals ①, ③, ⑥ and ground with CONSULT or tester.
   Voltage: Battery voltage

NG → Check the following.
- 10A fuse
- 30A fusible link
- Harness for open or short between cooling fan relay-1 and fuse
- Harness for open or short between cooling fan relay-1 and battery

If NG, repair harness or connectors.

OK

H

CHECK GROUND CIRCUIT.
1. Turn ignition switch "OFF".
2. Disconnect cooling fan motor-1 harness connector and cooling fan motor-2 harness connector.
3. Check harness continuity between cooling fan relay-1 terminal ⑤ and cooling fan motor-1 terminal ①, cooling fan relay-1 terminal ⑦ and cooling fan motor-2 terminal ①.
   Continuity should exist.
   If OK, check harness for short.
4. Check harness continuity between terminal ④ and body ground.
   Continuity should exist.
   If OK, check harness for short.

NG → Repair harness or connectors.

OK

I

CHECK OUTPUT SIGNAL CIRCUIT.
1. Disconnect ECM harness connector.
2. Check harness continuity between ECM terminal ⑨ and terminal ②.
   Continuity should exist.
   If OK, check harness for short.

NG → Check the following.
- Harness connectors (E101), (M8)
- Harness connectors (M49), (F6)
- Harness for open or short between cooling fan relay-1 and ECM

If NG, repair harness or connectors.

OK

CHECK COMPONENT
(Cooling fan relay-1).
Refer to "COMPONENT INSPECTION", EC-353.

NG → Replace cooling fan relay.

OK

Ⓒ

Simpo PDF Merge and Split Unregistered Version - http://www.simpopdf.com

Cooling Fan Control (Cont'd)

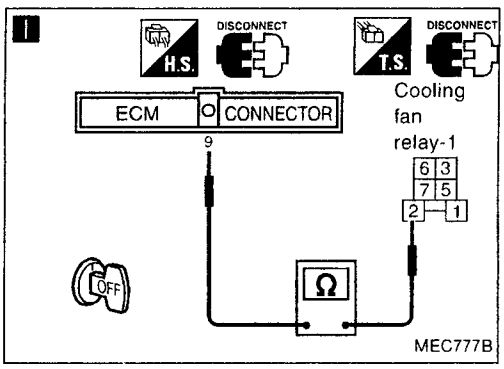

Ⓒ

CHECK COMPONENT
(Cooling fan motors-1 and -2).
Refer to "COMPONENT INSPECTION", EC-353.

NG → Replace cooling fan motors.

OK ↓

Disconnect and reconnect harness connectors in the circuit. Then retest.

Trouble is not fixed. ↓

Check ECM pin terminals for damage and check the connection of ECM harness connector. Reconnect ECM harness connector and retest.

↓

INSPECTION END

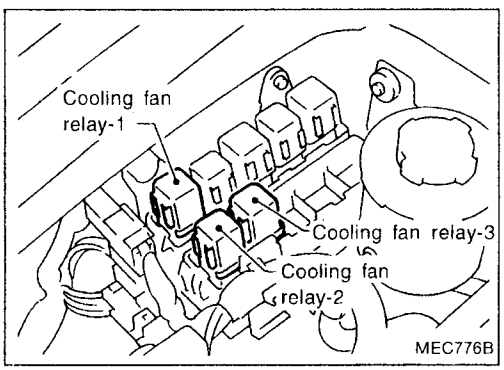

PROCEDURE B

INSPECTION START ↓

J

CHECK POWER SUPPLY.
1. Turn ignition switch "OFF".
2. Disconnect cooling fan relays-2 and -3.
3. Turn ignition switch "ON".
4. Check voltage between cooling fan relay-2 terminals ①, ③ and ground, and between cooling fan relay-3 terminals ①, ③ and ground with CONSULT or tester.
   Voltage: Battery voltage

NG → Check the following.
- 10A fuse
- 30A fusible link
- Harness for open or short between cooling fan relays-2, -3 and fuse
- Harness for open or short between cooling fan relays-2, -3 and battery

If NG, repair harness or connectors.

OK ↓

Ⓓ

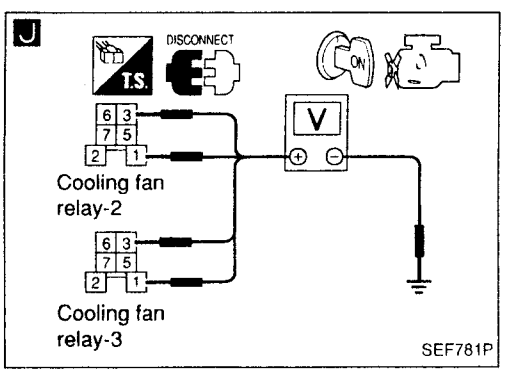

Simpo PDF Merge and Split Unregistered Version - http://www.simpopdf.com

Cooling Fan Control (Cont'd)

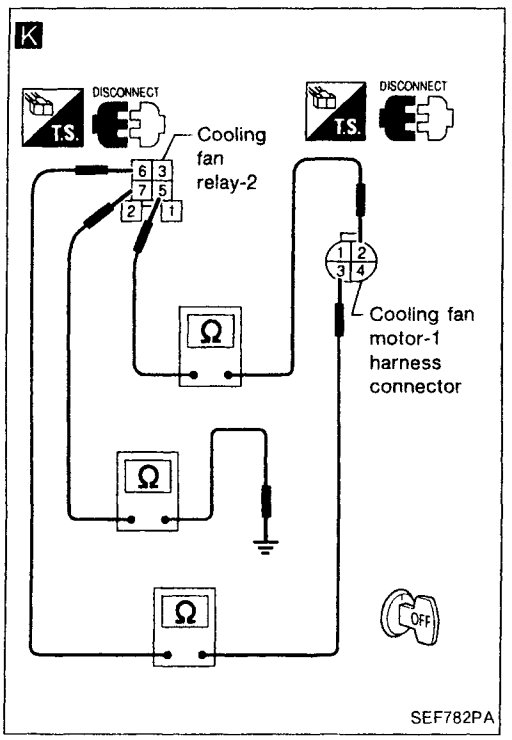

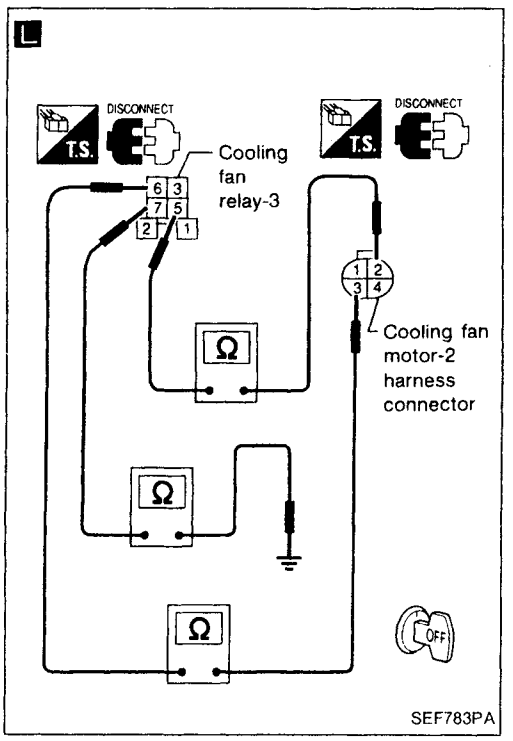

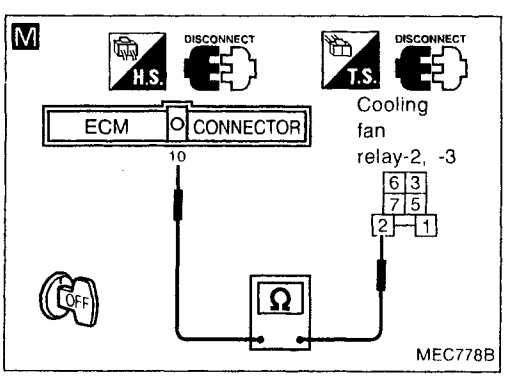

Ⓓ

CHECK GROUND CIRCUIT.
1. Turn ignition switch "OFF".
2. Disconnect cooling fan motor-1 harness connector and cooling fan motor-2 harness connector.

K 3. Check harness continuity between terminal ⑤ and terminal ②, terminal ⑥ and terminal ③, terminal ⑦ and body ground.
Continuity should exist.
If OK, check harness for short.

L 4. Check harness continuity between terminal ⑤ and terminal ②, terminal ⑥ and terminal ③, terminal ⑦ and body ground.
Continuity should exist.
If OK, check harness for short.

NG → Repair harness or connectors.

OK ↓

M

CHECK OUTPUT SIGNAL CIRCUIT.
1. Disconnect ECM harness connector.
2. Check harness continuity between ECM terminal ⑩ and terminal ②.
Continuity should exist.
If OK, check harness for short.

NG → Check the following.
- Harness connectors (F6), (M49)
- Harness connectors (M8), (E101)
- Harness for open or short between cooling fan relays-2, 3 and ECM

If NG, repair harness or connectors.

OK ↓

CHECK COMPONENT
(Cooling fan relays-2, 3).
Refer to "COMPONENT INSPECTION" on next page.

NG → Replace cooling fan relays.

OK ↓

CHECK COMPONENTS
(Cooling fan motors).
Refer to "COMPONENT INSPECTION" on next page.

NG → Replace cooling fan motors.

OK ↓

Disconnect and reconnect harness connectors in the circuit. Then retest.

Trouble is not fixed. ↓

Check ECM pin terminals for damage and check the connection of ECM harness connector. Reconnect ECM harness connector and retest.

↓

INSPECTION END

Simpo PDF Merge and Split Unregistered Version - http://www.simpopdf.com

Cooling Fan Control (Cont'd)

COMPONENT INSPECTION

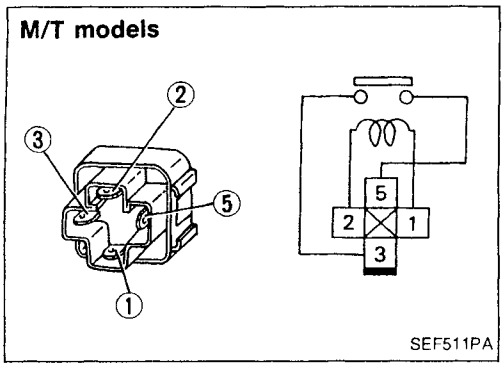

Cooling fan relay (M/T models)

Check continuity between terminals ③ and ⑤.

Conditions	Continuity
12V direct current supply between terminals ① and ②	Yes
No current supply	No

If NG, replace relay.

EC

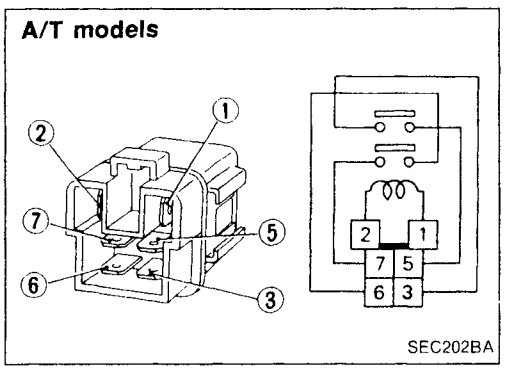

Cooling fan relays-1, -2 and -3 (A/T models)

Check continuity between terminals ③ and ⑤, ⑥ and ⑦.

Conditions	Continuity
12V direct current supply between terminals ① and ②	Yes
No current supply	No

If NG, replace relay.

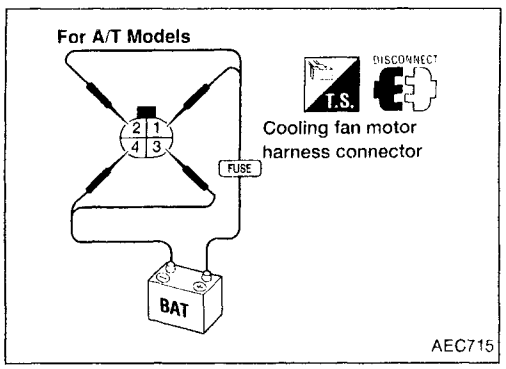

Cooling fan motors-1 and -2

1. Disconnect cooling fan motor harness connectors.
2. Supply cooling fan motor terminals with battery voltage and check operation.

	Speed	Terminals (⊕)	Terminals (⊖)
Cooling fan motor	Low (A/T models)	①	④
	High (A/T models)	①, ②	③, ④
	High (M/T models)	①	②

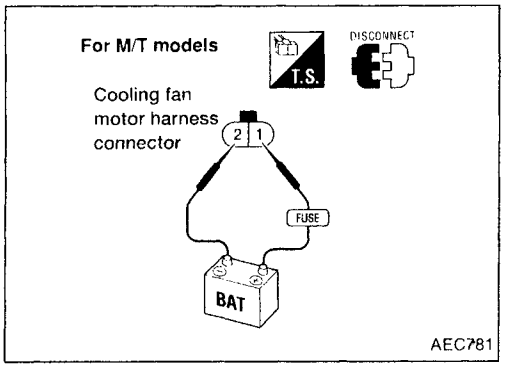

Cooling fan motor should operate.
If NG, replace cooling fan motor.

Simpo PDF Merge and Split Unregistered Version - http://www.simpopdf.com

Power Steering Oil Pressure Switch

EC-PST/SW-01

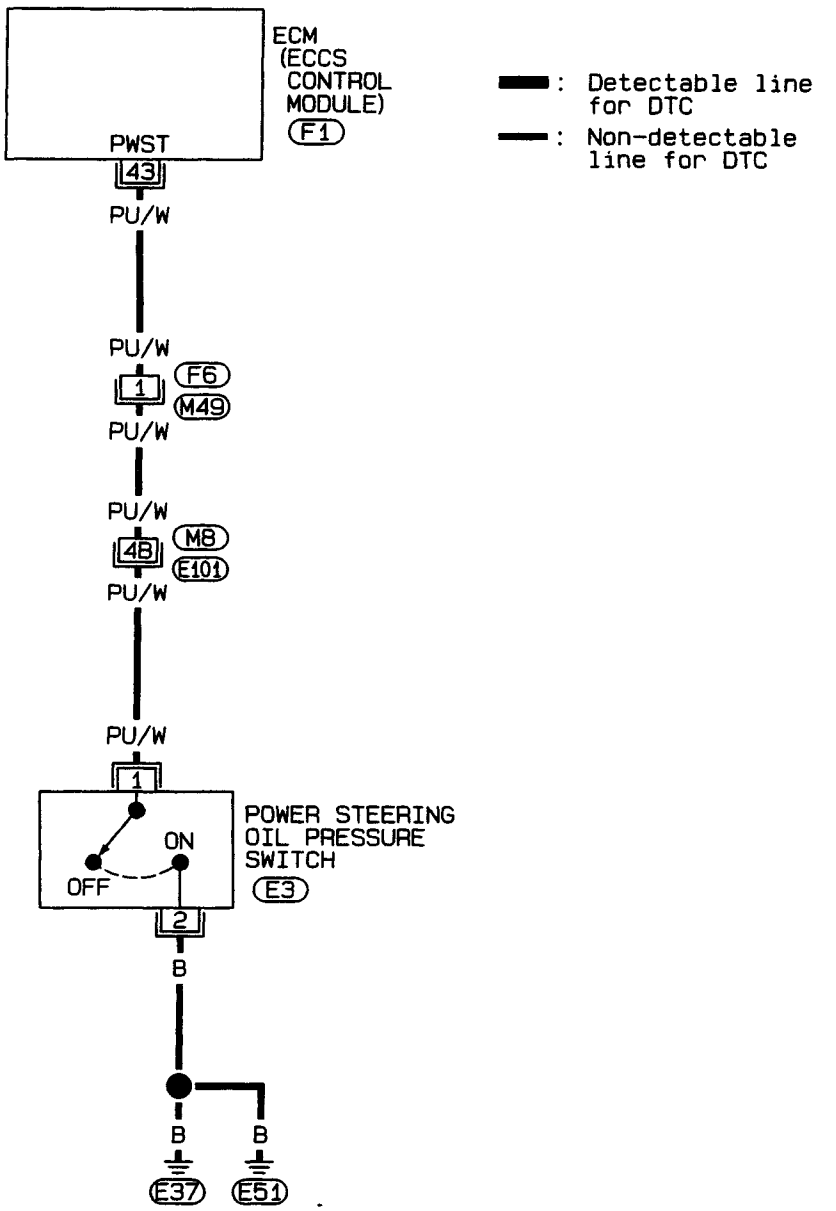

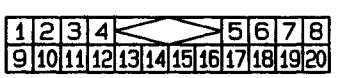

M49
W



E3
GY

Refer to last page
(Foldout page).

M8, E101

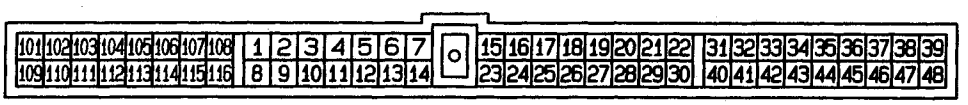

F1
L



HEC018

Simpo PDF Merge and Split Unregistered Version - http://www.simpopdf.com

Power Steering Oil Pressure Switch (Cont'd)

COMPONENT DESCRIPTION

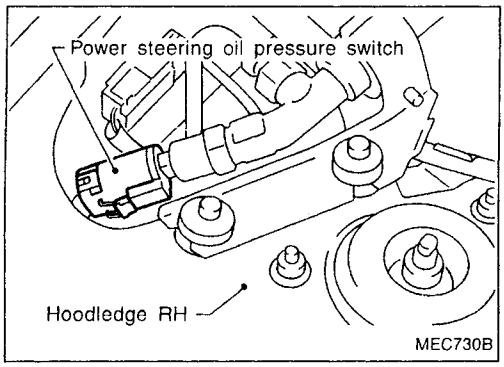

The power steering oil pressure switch is attached to the power steering high-pressure tube and detects a power steering load. When a power steering load is detected, it signals the ECM. The ECM adjusts the IACV-AAC valve to increase the idle speed and adjust for the increased load.

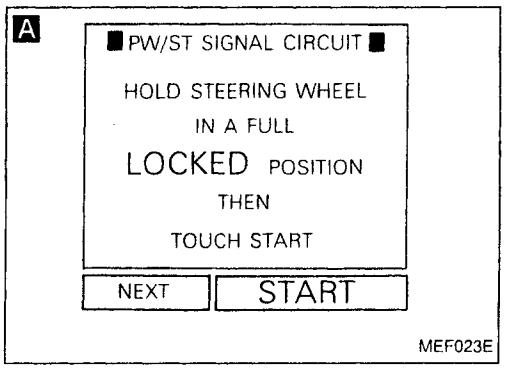

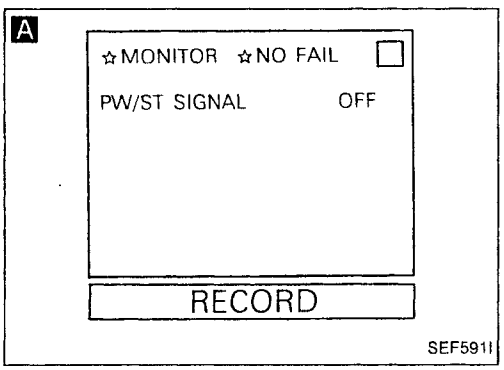

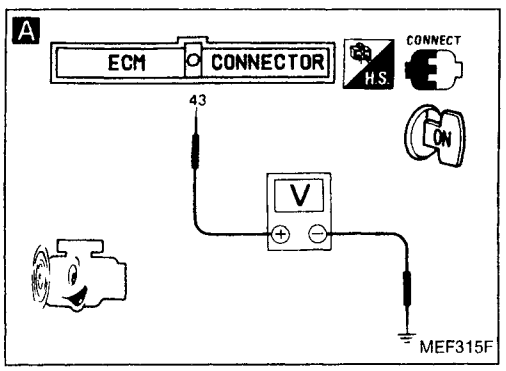

DIAGNOSTIC PROCEDURE

INSPECTION START

A

CHECK OVERALL FUNCTION.

1. Start engine and warm it up sufficiently.
2. Perform "PW/ST SIGNAL CIRCUIT" in "FUNCTION TEST" mode with CONSULT.

OR

2. Check "PW/ST SIGNAL" in "DATA MONITOR" mode with CONSULT.

Steering is in neutral position:
OFF
Steering is turned:
ON

OR

2. Check voltage between ECM terminal ㊸ and ground.

Voltage:
When steering wheel is turned quickly.
Approximately 0V
Except above
Approximately 8 - 10V

OK → INSPECTION END

NG → Ⓐ

EC

Simpo PDF Merge and Split Unregistered Version - http://www.simpopdf.com

Power Steering Oil Pressure Switch (Cont'd)

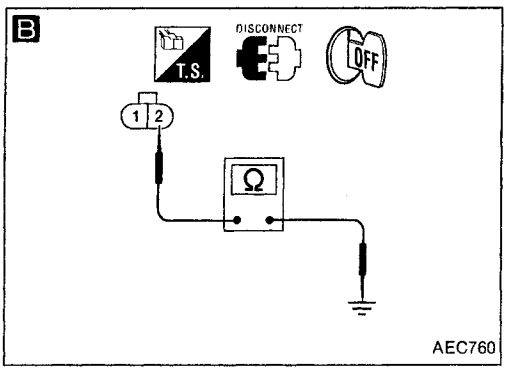

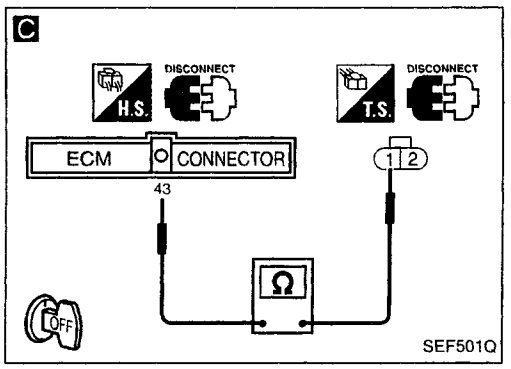

Ⓐ

B

CHECK GROUND CIRCUIT.
1. Turn ignition switch "OFF".
2. Disconnect power steering oil pressure switch harness connector.
3. Check harness continuity between terminal ② and engine ground.
   Continuity should exist.
   If OK, check harness for short.

NG → Repair harness or connectors.

OK ↓

C

CHECK INPUT SIGNAL CIRCUIT.
1. Disconnect ECM harness connector.
2. Check harness continuity between ECM terminal ㊸ and terminal ①.
   Continuity should exist.
   If OK, check harness for short.

NG → Check the following.
- Harness connectors (F6), (M49)
- Harness connectors (M8), (E101)
- Harness for open or short between ECM and power steering oil pressure switch

If NG, repair harness or connectors.

OK ↓

CHECK COMPONENT
(Power steering oil pressure switch).
Refer to "COMPONENT INSPECTION" below.

NG → Replace power steering oil pressure switch.

OK ↓

Disconnect and reconnect harness connectors in the circuit. Then retest.

Trouble is not fixed. ↓

Check ECM pin terminals for damage and check the connection of ECM harness connector. Reconnect ECM harness connector and retest.

↓

INSPECTION END

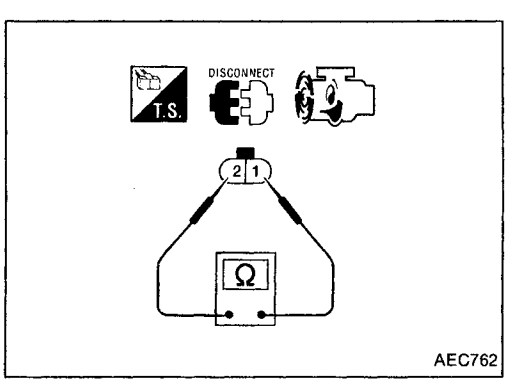

COMPONENT INSPECTION

Power steering oil pressure switch

1. Disconnect power steering oil pressure switch harness connector then start engine.
2. Check continuity between terminals ① and ②.

Conditions	Continuity
Steering wheel is being turned	Yes
Steering wheel is not being turned	No

If NG, replace power steering oil pressure switch.

Simpo PDF Merge and Split Unregistered Version - http://www.simpopdf.com

Park/Neutral Position Switch

EC-PNP/SW-01

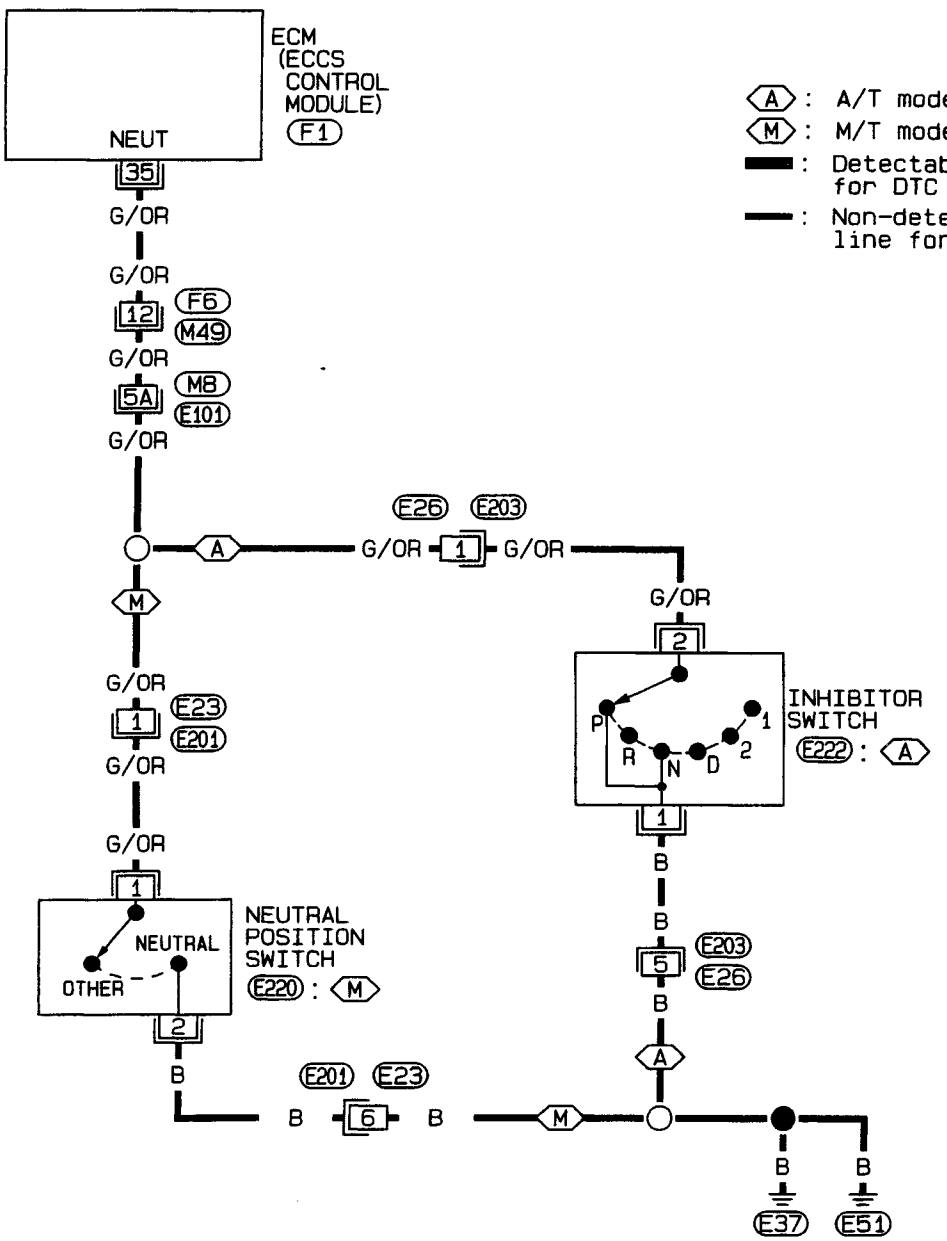

A : A/T models
M : M/T models
: Detectable line for DTC
: Non-detectable line for DTC



M49 W

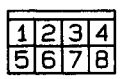

E203 GY



E201 B

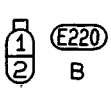

E220 B



E222 GY

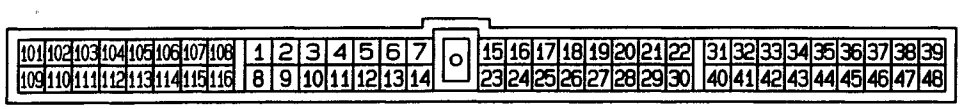

F1 L

H.S.

Refer to last page (Foldout page).

M8, E101

HEC019

Simpo PDF Merge and Split Unregistered Version - http://www.simpopdf.com

Park/Neutral Position Switch (Cont'd)

When the gear position is in "P" (A/T models only) or "N", park/neutral position is "ON". ECM detects the position because the continuity of the line (the "ON" signal) exists.

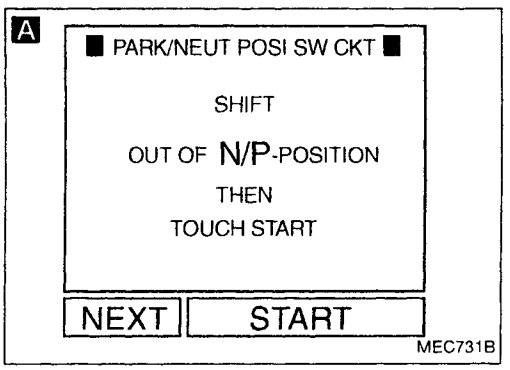

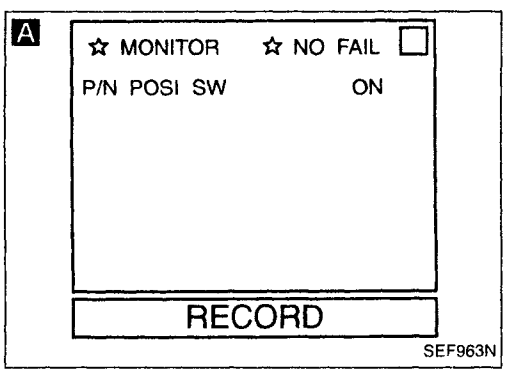

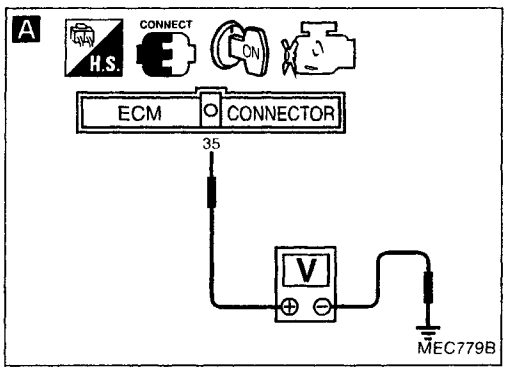

DIAGNOSTIC PROCEDURE

Neutral position switch (M/T models)

INSPECTION START

A

CHECK OVERALL FUNCTION.

1. Turn ignition switch "ON".
2. Perform "PARK/NEUT POSI SW CKT" in "FUNCTION TEST" mode with CONSULT.

OR

2. Select "P/N POSI SW" in "DATA MONITOR" mode with CONSULT.
3. Check "P/N POSI SW" signal under the following conditions.

Neutral position: ON
Except neutral position: OFF

OR

2. Check voltage between ECM terminal ㉟ and ground under the following conditions.

Voltage:
Neutral position
Approximately 0V
Except neutral position
Battery voltage

OK → INSPECTION END

NG → Ⓐ

Simpo PDF Merge and Split Unregistered Version - http://www.simpopdf.com

Park/Neutral Position Switch (Cont'd)

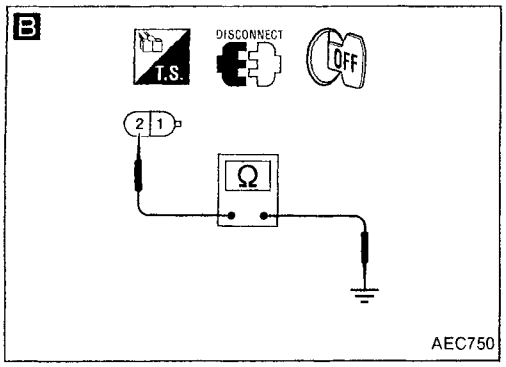

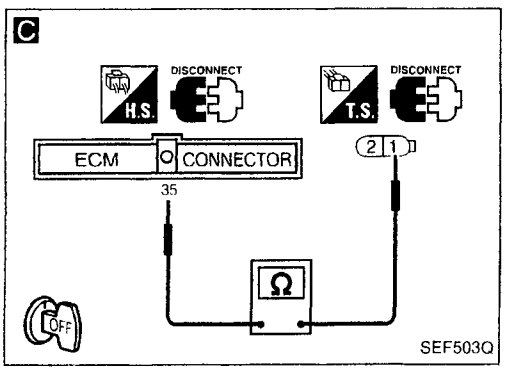

Ⓐ

B

CHECK GROUND CIRCUIT.
1. Turn ignition switch "OFF".
2. Disconnect neutral position switch harness connector.
3. Check harness continuity between terminal ② and body ground.
   Continuity should exist.
   If OK, check harness for short.

NG → Check the following.
- Harness connectors E201, E23
- Harness for open or short between neutral position switch and body ground

If NG, repair harness or connectors.

OK ↓

C

CHECK INPUT SIGNAL CIRCUIT.
1. Disconnect ECM harness connector.
2. Check harness continuity between ECM terminal 35 and terminal ①.
   Continuity should exist.
   If OK, check harness for short.

NG → Check the following.
- Harness connectors F6, M49
- Harness connectors M8, E101
- Harness connectors E23, E201
- Harness for open or short between ECM and neutral position switch

If NG, repair harness or connectors.

OK ↓

CHECK COMPONENT (Neutral position switch).
Refer to MT section.

NG → Replace neutral position switch.

OK ↓

Disconnect and reconnect harness connectors in the circuit. Then retest.

Trouble is not fixed. ↓

Check ECM pin terminals for damage and check the connection of ECM harness connector. Reconnect ECM harness connector and retest.

↓

INSPECTION END

EC

Simpo PDF Merge and Split Unregistered Version - http://www.simpopdf.com

Park/Neutral Position Switch (Cont'd)

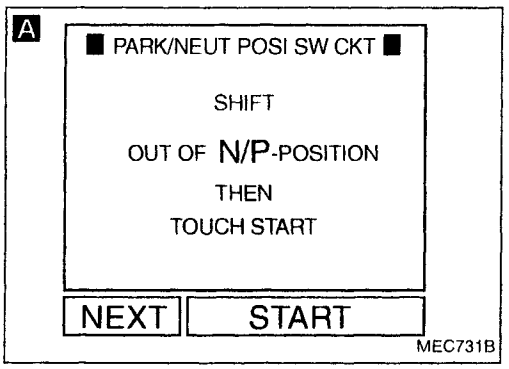

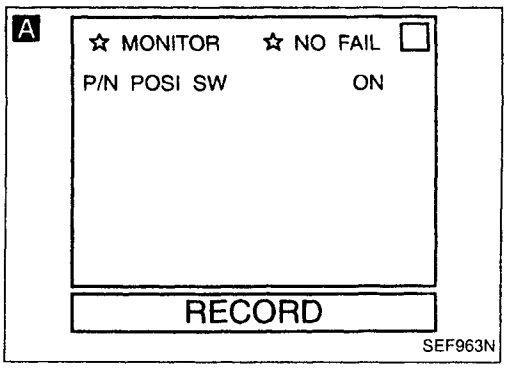

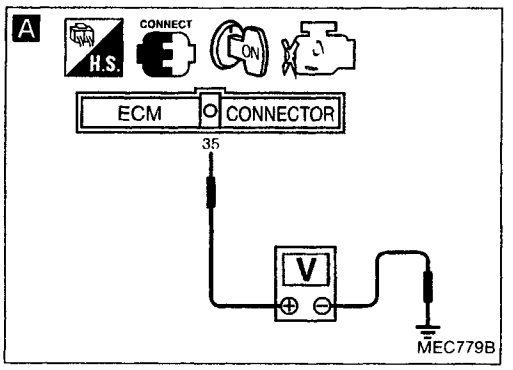

Inhibitor switch (A/T models)

INSPECTION START

A

CHECK OVERALL FUNCTION.

1. Turn ignition switch "ON".
2. Perform "PARK/NEUT POSI SW CKT" in "FUNCTION TEST" mode with CONSULT.

OK → INSPECTION END

OR

1. Turn ignition switch "ON".
2. Select "P/N POSI SW" in "DATA MONITOR" mode with CONSULT.
3. Check "P/N POSI SW" signal under the following conditions.

"N" or "P" position: ON
Except above position: OFF

OR

1. Make sure that inhibitor switch circuit functions properly. (Refer to AT section.)
2. Turn ignition switch "ON".
3. Check voltage between ECM terminal ㉟ and ground under the following conditions.

Voltage:
"N" or "P" position
Approximately 0V
Except above position
Battery voltage

NG

Ⓐ

Simpo PDF Merge and Split Unregistered Version - http://www.simpopdf.com

Park/Neutral Position Switch (Cont'd)

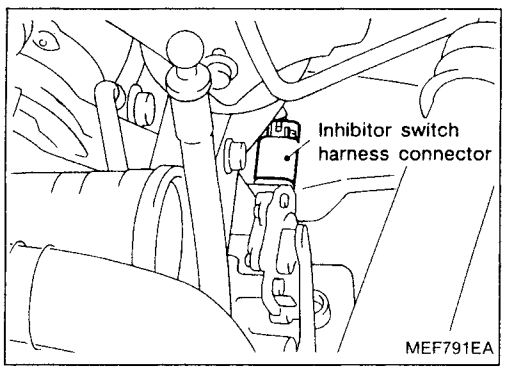

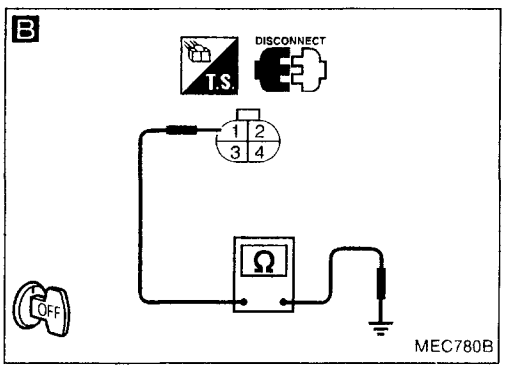

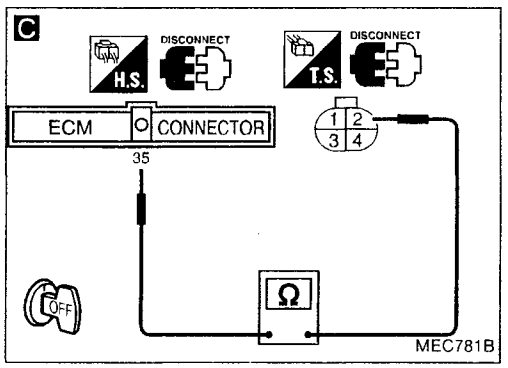

Ⓐ

B

CHECK GROUND CIRCUIT.
1. Disconnect inhibitor switch harness connector.
2. Check harness continuity between terminals ① and body ground.
   Continuity should exist.
   If OK, check harness for short.

NG → Check the following.
- Harness connectors (E203), (E26)
- Harness for open or short between inhibitor switch and body ground

If NG, repair harness or connectors.

OK ↓

C

CHECK INPUT SIGNAL CIRCUIT.
1. Disconnect ECM harness connector.
2. Check harness continuity between ECM terminal ㉟ and terminal ②.
   Continuity should exist.
   If OK, check harness for short.

NG → Check the following.
- Harness connectors (F6), (M49)
- Harness connectors (M8), (E101)
- Harness connectors (E26), (E203)
- Harness for open or short between ECM and inhibitor switch

If NG, repair harness or connectors.

OK ↓

CHECK COMPONENT (Inhibitor switch).
Refer to AT section.

NG → Replace inhibitor switch.

OK ↓

Disconnect and reconnect harness connectors in the circuit. Then retest.

Trouble is not fixed. ↓

Check ECM pin terminals for damage and check the connection of ECM harness connector. Reconnect ECM harness connector and retest.

↓

INSPECTION END

EC

Simpo PDF Merge and Split Unregistered Version - http://www.simpopdf.com

Heated Oxygen Sensor (HO2S)

EC-HO2S-01

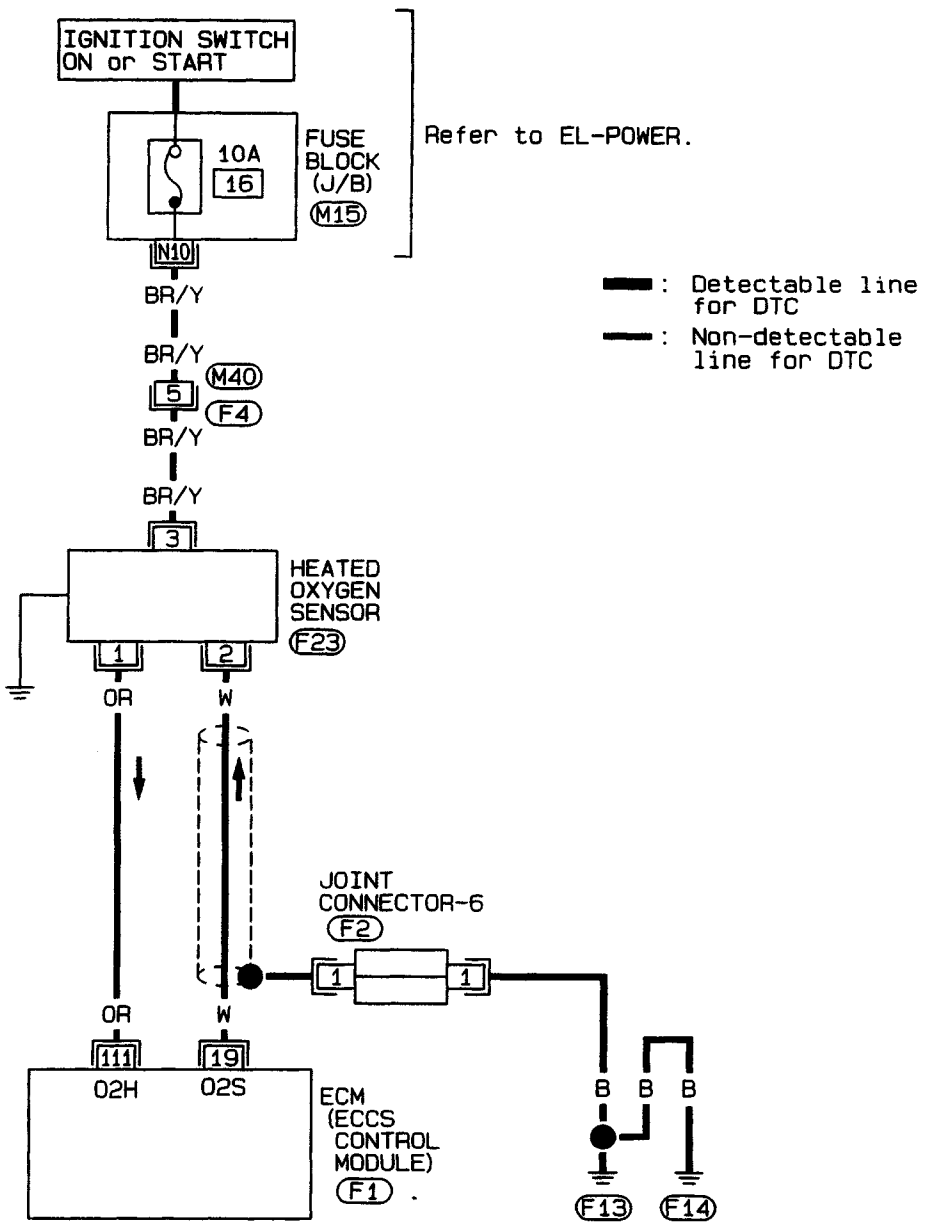

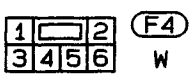

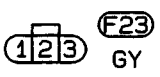

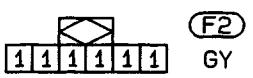

Refer to last page (Foldout page).

M15

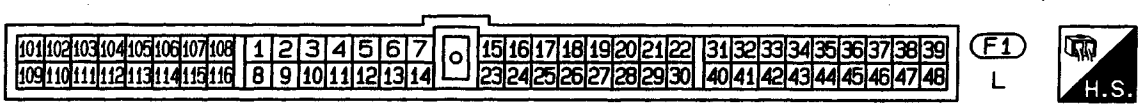

HEC020

Simpo PDF Merge and Split Unregistered Version - http://www.simpopdf.com

Heated Oxygen Sensor (HO2S) (Cont'd)

SYSTEM DESCRIPTION

Heated oxygen sensor heater control

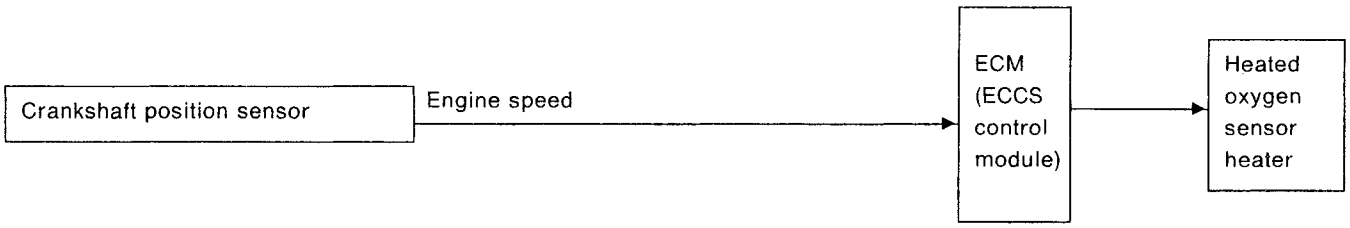

The ECM performs ON/OFF control of the heated oxygen sensor heater corresponding to the engine speed.

OPERATION

Engine speed rpm	Heated oxygen sensor heater
Above 3,200	OFF
Below 3,200	ON

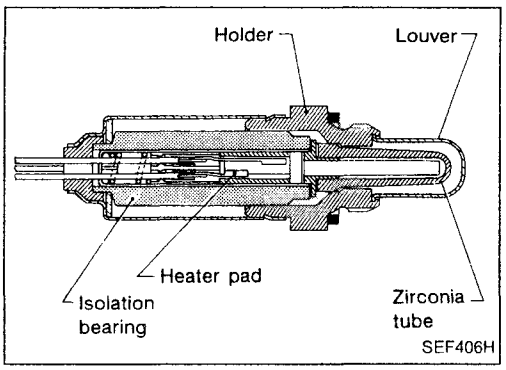

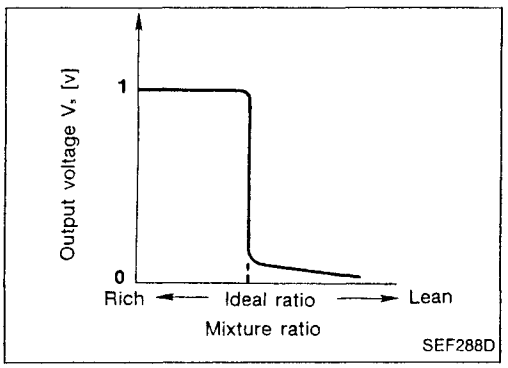

COMPONENT DESCRIPTION

The heated oxygen sensor is placed into the front tube. It detects the amount of oxygen in the exhaust gas compared to the outside air. The heated oxygen sensor has a closed-end tube made of ceramic zirconia. The zirconia generates voltage from approximately 1V in richer conditions to 0V in leaner conditions. The heated oxygen sensor signal is sent to the ECM. The ECM adjusts the injection pulse duration to achieve the ideal air-fuel ratio. The ideal air-fuel ratio occurs near the radical change from 1V to 0V.

EC

Simpo PDF Merge and Split Unregistered Version - http://www.simpopdf.com

Heated Oxygen Sensor (HO2S) (Cont'd)

DIAGNOSTIC PROCEDURE

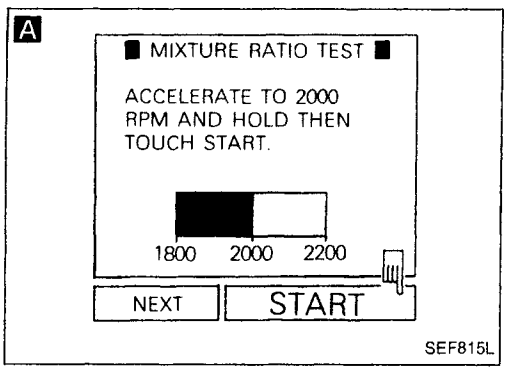

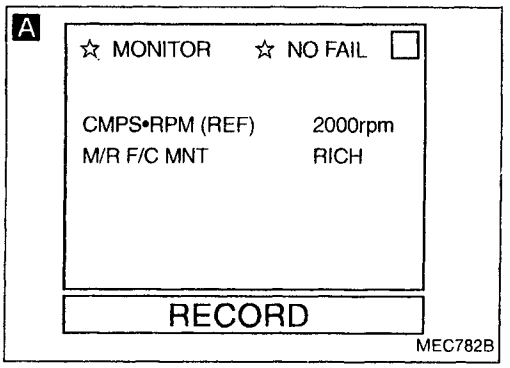

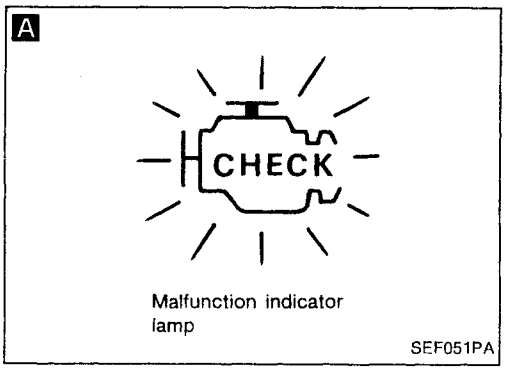

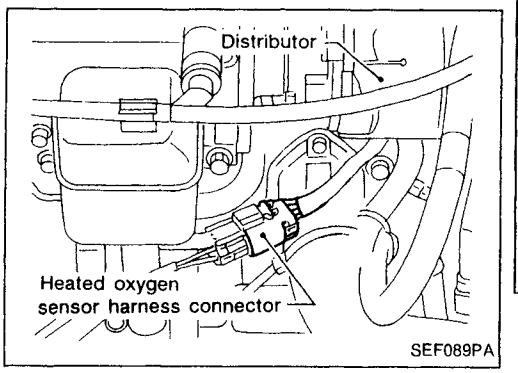

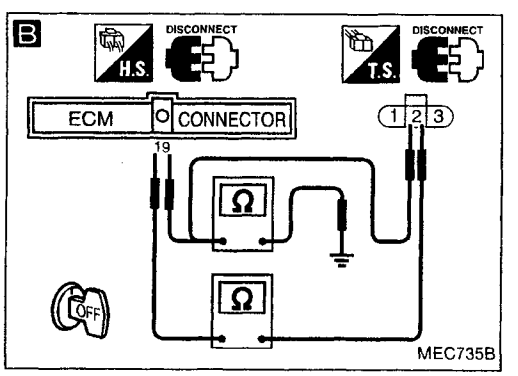

INSPECTION START

A

CHECK HEATED OXYGEN SENSOR CIRCUIT.

1. Start engine and warm it up sufficiently.
2. Perform "MIXTURE RATIO TEST" in "FUNCTION TEST" mode with CONSULT.

OR

2. Make sure that "M/R F/C MNT" in "DATA MONITOR" mode indicates "RICH" and "LEAN" periodically more than 5 times during 10 seconds at 2,000 rpm.

OR

2. Stop engine and set ECM Diagnostic Test Mode II (Heated oxygen sensor monitor).
3. Restart engine and run it at about 2,000 rpm for about 2 minutes under no-load.
4. Keep engine speed at 2,000 rpm and make sure that the malfunction indicator lamp on the instrument panel goes on and off more than 5 times during 10 seconds.

OK → INSPECTION END

NG

B

CHECK INPUT SIGNAL CIRCUIT.

1. Turn ignition switch "OFF".
2. Disconnect heated oxygen sensor harness connector and ECM harness connector.
3. Check harness continuity between ECM terminal ⑲ and terminal ②.
   Continuity should exist.
4. Check harness continuity between ECM terminal ⑲ (or terminal ②) and ground.
   Continuity should not exist.
   If OK, check harness for short.

NG → Repair harness or connectors.

OK

Ⓐ

Simpo PDF Merge and Split Unregistered Version - http://www.simpopdf.com

Heated Oxygen Sensor (HO2S) (Cont'd)

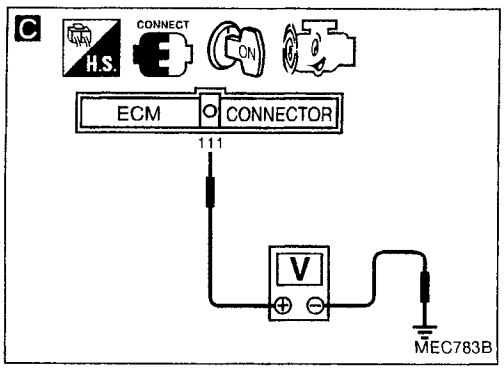

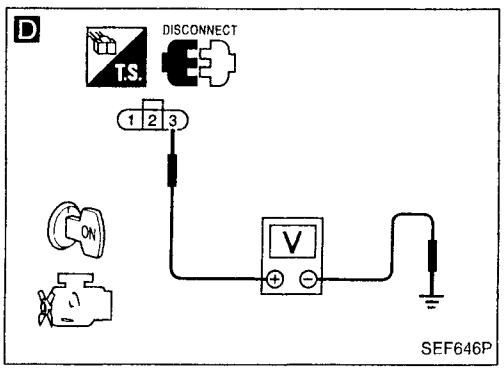

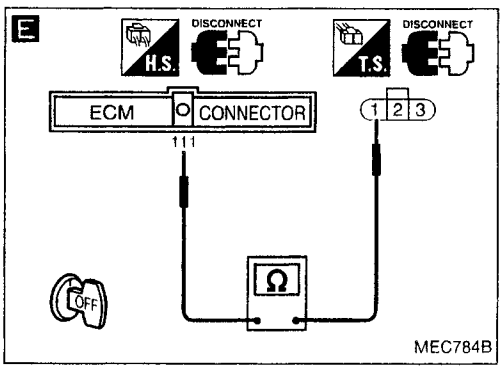

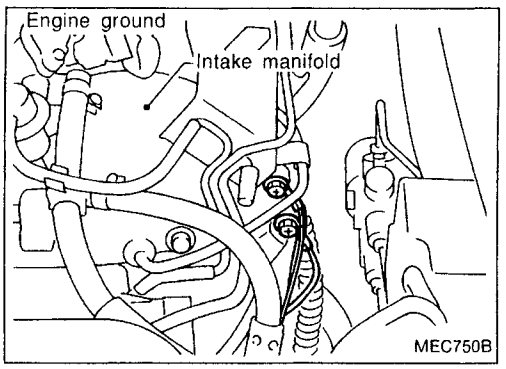

Ⓐ

C

CHECK HEATED OXYGEN SENSOR HEATER CIRCUIT.
1. Reconnect harness connectors.
2. Start engine.
3. Check voltage between ECM terminal (111) and ground with CONSULT or tester under the following conditions.

Voltage:
Engine speed is below 3,200 rpm
Approximately 0V
Engine speed is above 3,200 rpm
Battery voltage

OK → Go to "CHECK COMPONENT".

NG ↓

D

CHECK POWER SUPPLY.
1. Stop engine.
2. Disconnect heated oxygen sensor harness connector.
3. Turn ignition switch "ON".
4. Check voltage between terminal ③ and ground.

Voltage: Battery voltage

NG → Check the following.
- Harness connectors (F4), (M40)
- 10A fuse
- Harness for open or short between heated oxygen sensor and fuse

If NG, repair harness or connectors.

OK ↓

E

CHECK OUTPUT SIGNAL CIRCUIT.
1. Turn ignition switch "OFF".
2. Disconnect ECM harness connector.
3. Check harness continuity between terminal ① and ECM terminal (111).

Continuity should exist.
If OK, check harness for short.

NG → Repair harness or connectors.

OK ↓

Loosen and retighten engine ground screws.

↓

CHECK COMPONENT
(Heated oxygen sensor heater).
Refer to "COMPONENT INSPECTION" on next page.

NG → Replace heated oxygen sensor.

OK ↓

Disconnect and reconnect harness connectors in the circuit. Then retest.

Trouble is not fixed. ↓

Check ECM pin terminals for damage and check the connection of ECM harness connector. Reconnect ECM harness connector and retest.

↓

INSPECTION END

EC

Simpo PDF Merge and Split Unregistered Version - http://www.simpopdf.com

Heated Oxygen Sensor (HO2S) (Cont'd)

COMPONENT INSPECTION

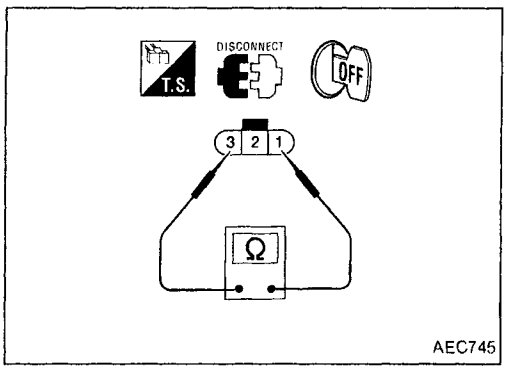

Heated oxygen sensor heater

Check resistance between terminals ① and ③.

Resistance: 3.3 - 6.3Ω [at 25°C (77°F)]

If NG, replace the heated oxygen sensor.

Simpo PDF Merge and Split Unregistered Version - http://www.simpopdf.com

Torque Converter Clutch Solenoid Valve

EC-LKUP-01

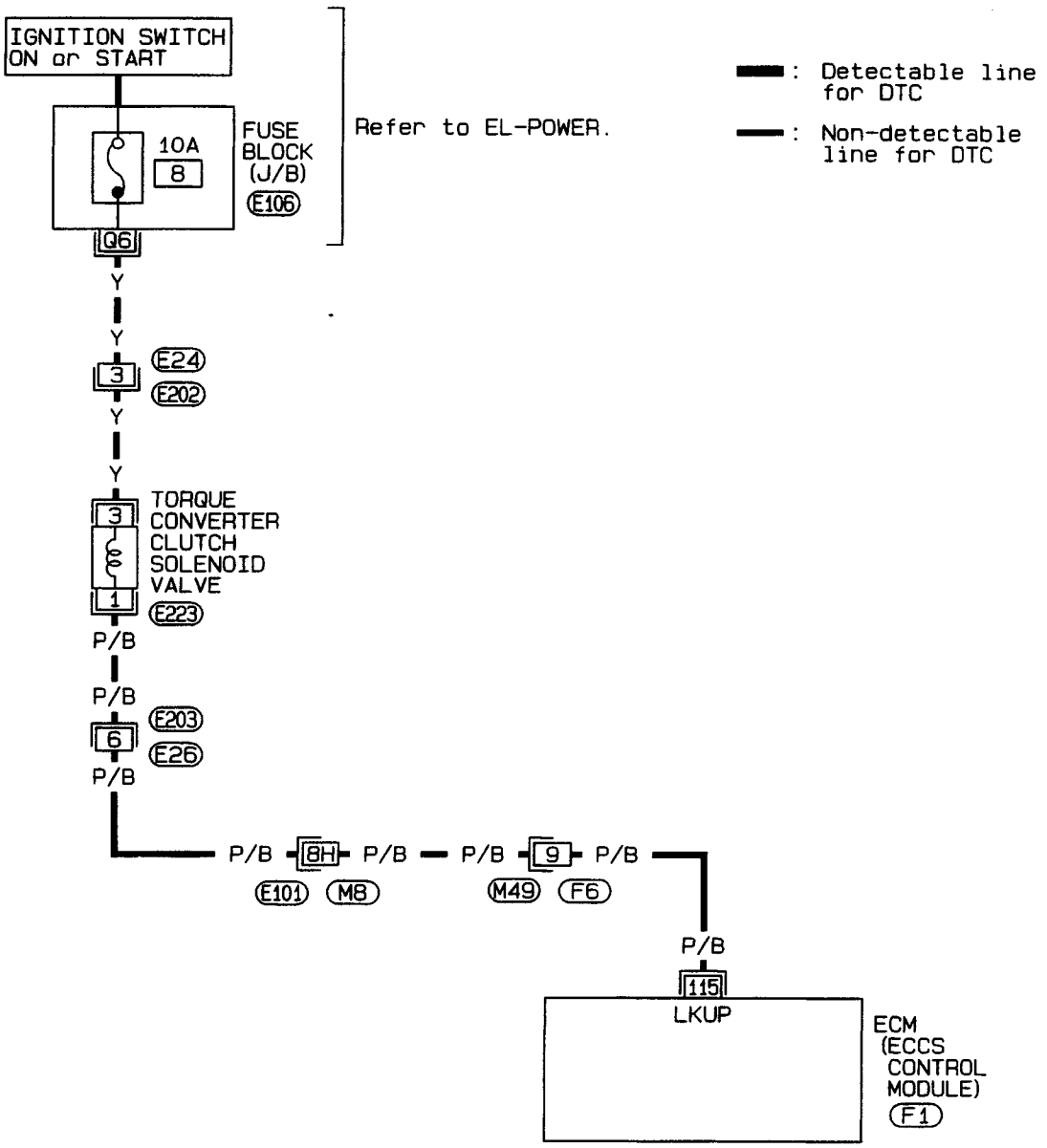

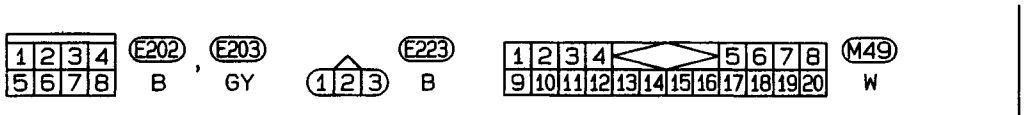

Refer to last page (Foldout page).

M8, E101, E106

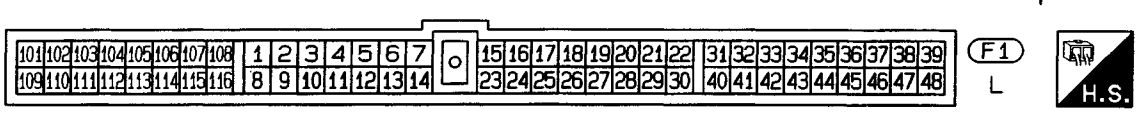

HEC023

Simpo PDF Merge and Split Unregistered Version - http://www.simpopdf.com

Torque Converter Clutch Solenoid Valve (Cont'd)

SYSTEM DESCRIPTION

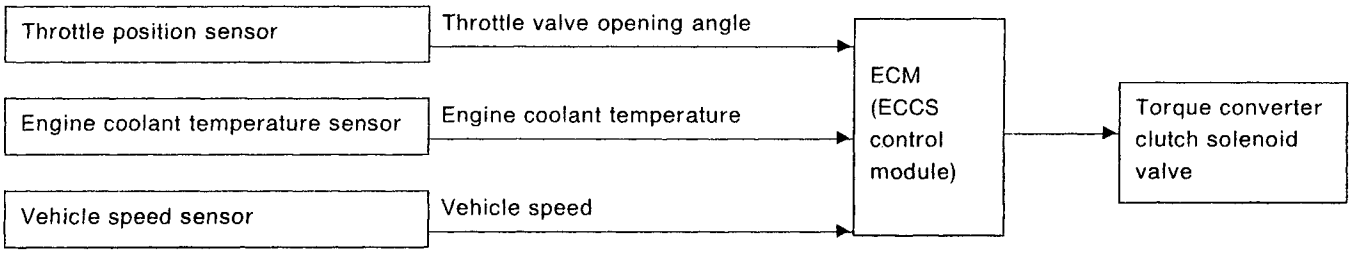

The A/T lock-up is controlled by the ECM through the torque converter clutch solenoid valve. When the ECM detects any of the following conditions, the ECM switches the torque converter clutch solenoid valve OFF to accomplish lock-up operation. While the vehicle is in conditions other than below, the torque converter clutch solenoid valve is always set to ON, releasing the lock-up operation.

- Throttle position is open.
- Engine coolant temperature is 70°C (158°F) or more.
- Vehicle speed is 58 km/h (36 MPH) or more.

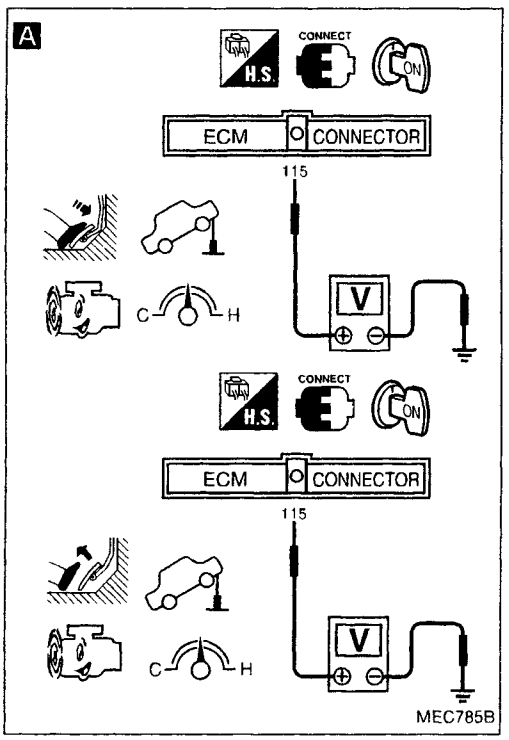

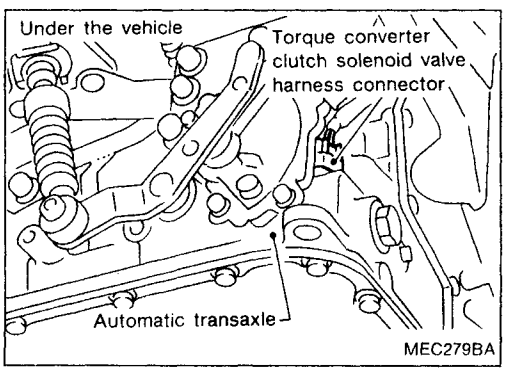

DIAGNOSTIC PROCEDURE

INSPECTION START

A

CHECK CONTROL FUNCTION.
1. Jack up drive wheels.
2. Start engine and warm it up sufficiently.
3. Shift selector lever to "D" position.
4. Check voltage between ECM terminal (115) and ground under the following conditions.

Voltage:
Accelerator pedal is depressed [Vehicle speed is above 58 km/h (36 MPH).]
Battery voltage
Accelerator pedal is fully released
Approximately 0V

OK → CHECK COMPONENT (Torque converter clutch solenoid valve).
Refer to "Electrical Components Inspection" in AT section.
If NG, replace torque converter clutch solenoid valve.

OK → INSPECTION END

NG

B

CHECK POWER SUPPLY.
1. Stop engine.
2. Disconnect torque converter clutch solenoid valve harness connector.
3. Turn ignition switch "ON".
4. Check voltage between terminal (3) and ground.

Voltage: Battery voltage

NG → Check the following.
- Harness connectors (E24), (E202)
- 10A fuse
- Harness for open or short between torque converter clutch solenoid valve and fuse

If NG, repair harness or connectors.

OK → (A)

Simpo PDF Merge and Split Unregistered Version - http://www.simpopdf.com

Torque Converter Clutch Solenoid Valve (Cont'd)

B

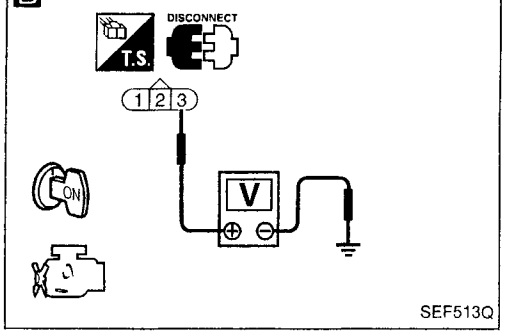

C

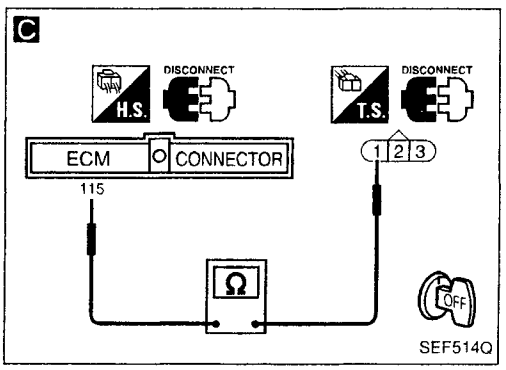

Ⓐ

C

CHECK OUTPUT SIGNAL CIRCUIT.
1. Turn ignition switch "OFF".
2. Disconnect ECM harness connector.
3. Check harness continuity between ECM terminal (115) and terminal ①.
   Continuity should exist.
   If OK, check harness for short.

NG → Check the following.
- Harness connectors (E203), (E26)
- Harness connectors (E101), (M8)
- Harness connectors (M49), (F6)
- Harness for open or short between ECM and torque converter clutch solenoid valve

If NG, repair harness or connectors.

OK ↓

CHECK COMPONENT
(Torque converter clutch solenoid valve).
Refer to "Electrical Components Inspection" in AT section.

NG → Replace torque converter clutch solenoid valve.

OK ↓

Disconnect and reconnect harness connectors in the circuit. Then retest.

Trouble is not fixed. ↓

Check ECM pin terminals for damage and check the connection of ECM harness connector. Reconnect ECM harness connector and retest.

↓

INSPECTION END

EC

Simpo PDF Merge and Split Unregistered Version - http://www.simpopdf.com

Malfunction Indicator Lamp (MIL) & Data Link Connector (DLC) for CONSULT

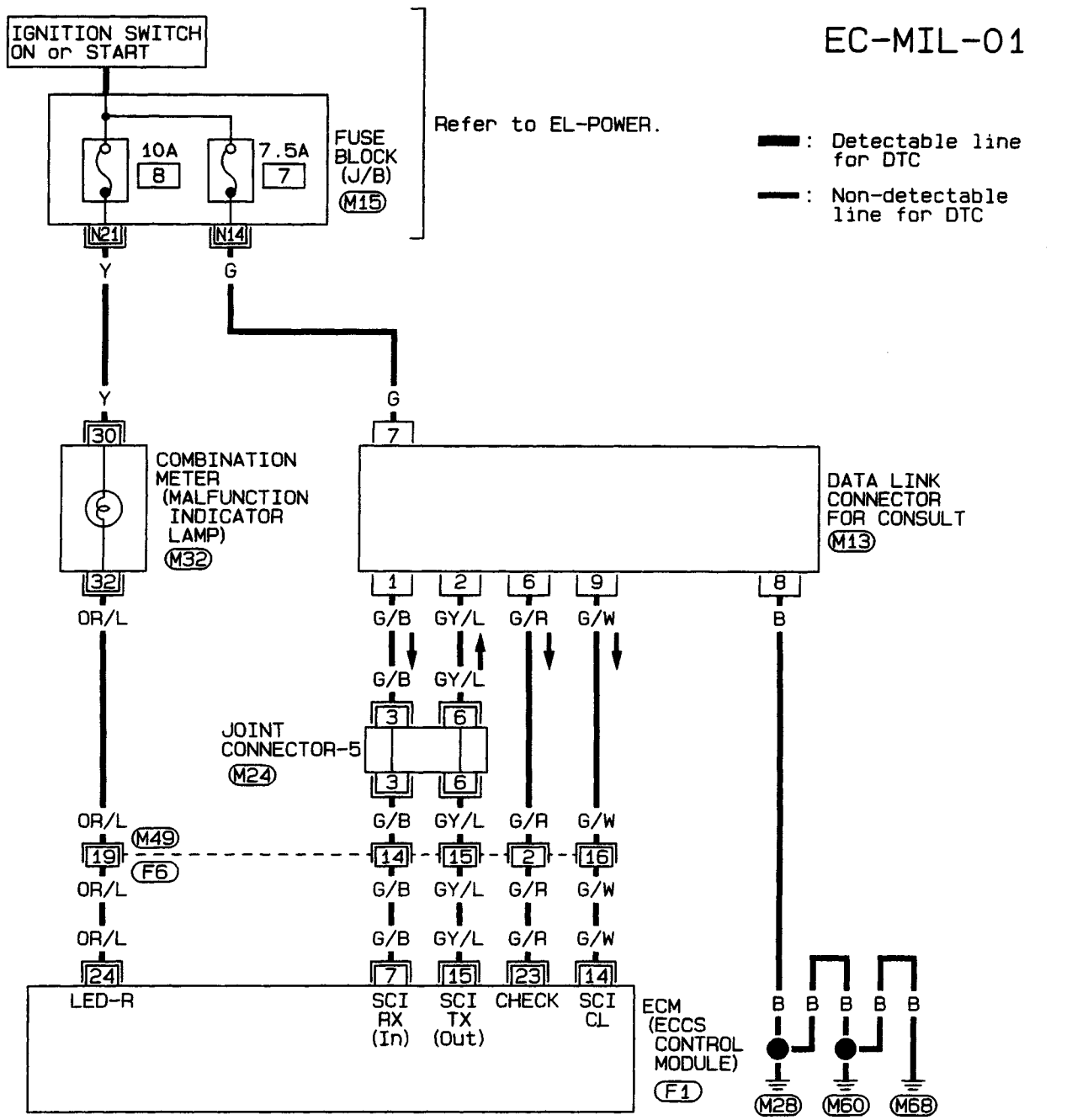

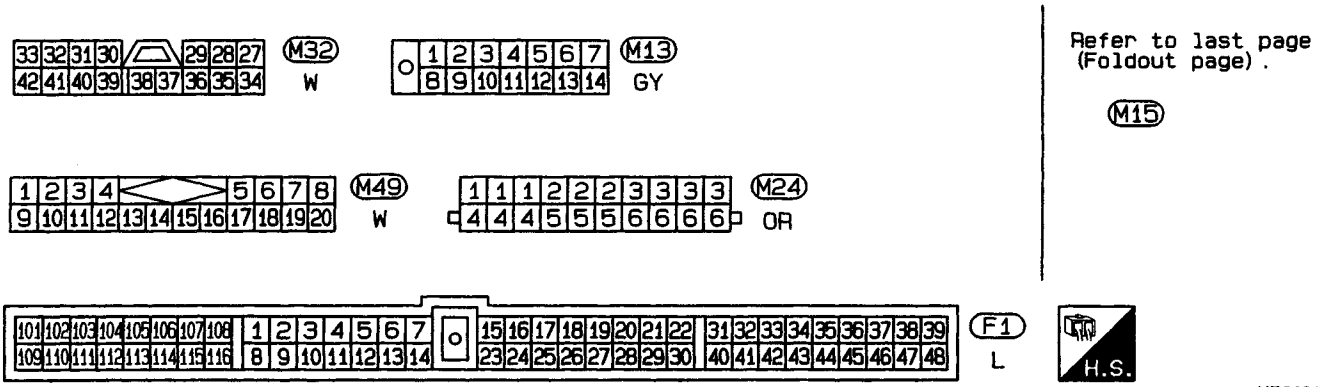

Refer to last page (Foldout page).

M15

HEC024

Simpo PDF Merge and Split Unregistered Version - http://www.simpopdf.com

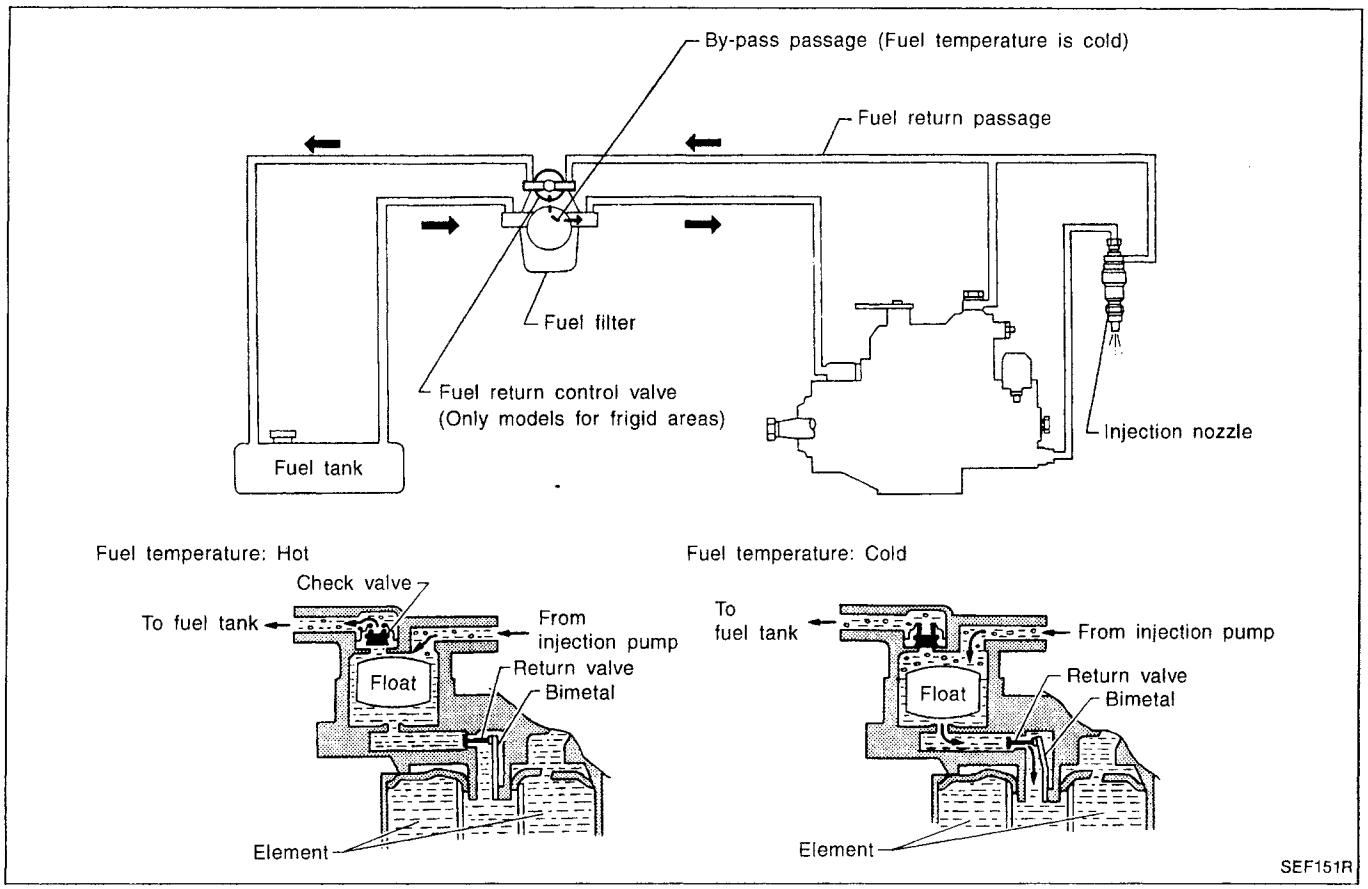

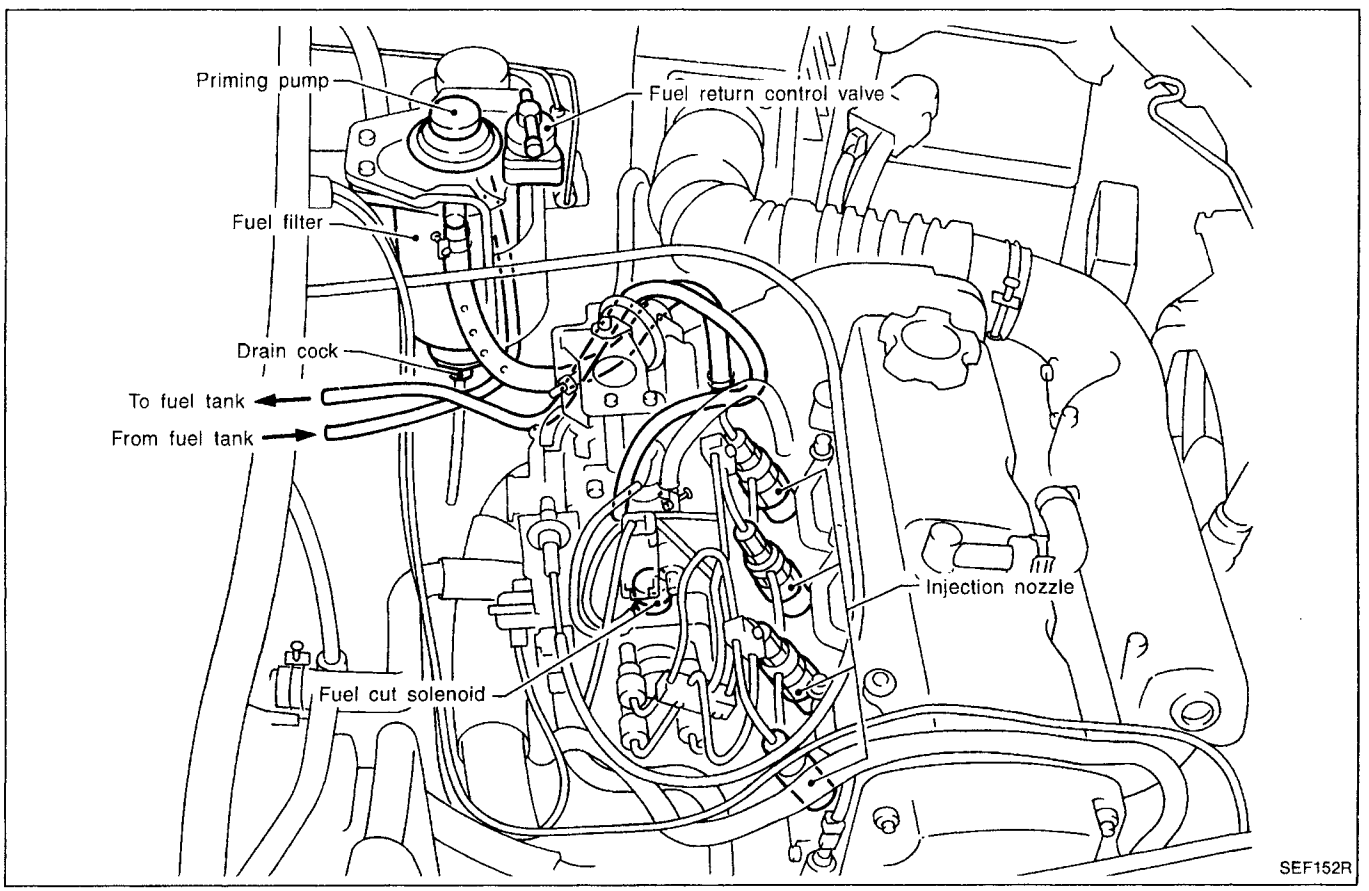

Simpo PDF Merge and Split Unregistered Version - http://www.simpopdf.com

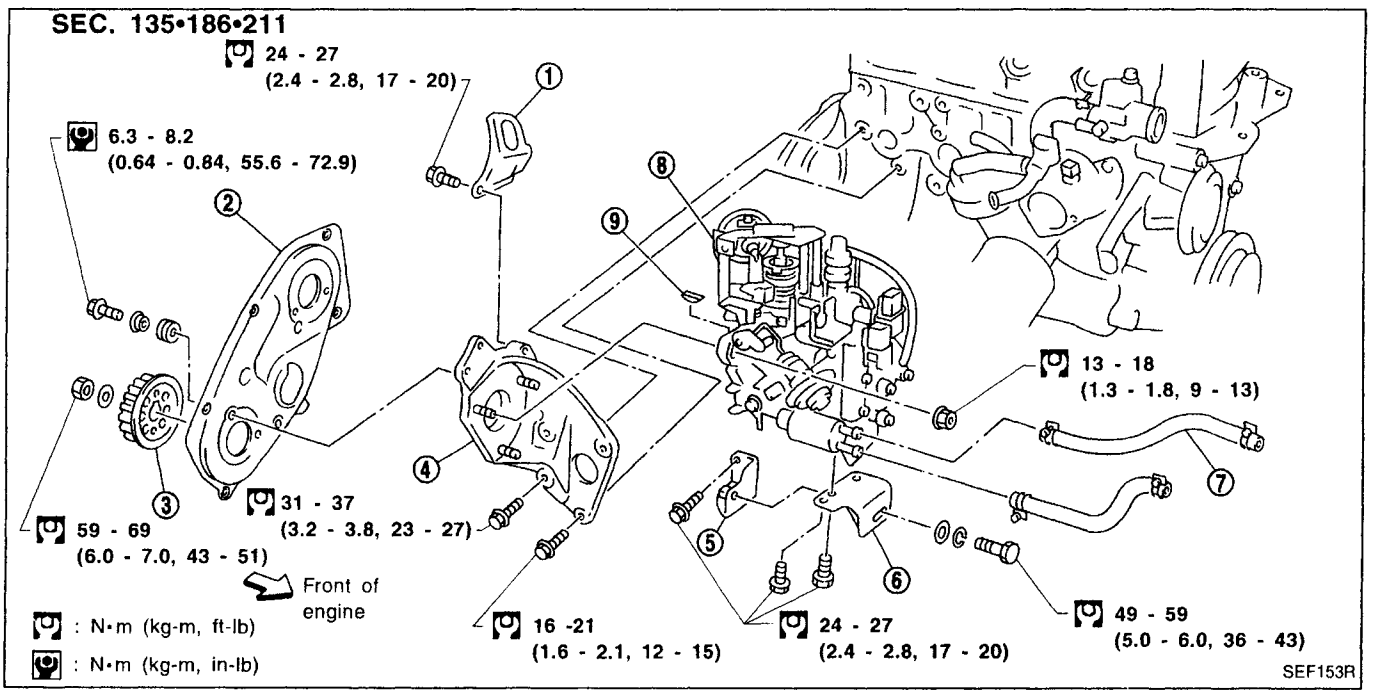

① Engine slinger
② Rear back cover
③ Injection pump sprocket
④ Injection pump bracket
⑤ Bracket
⑥ Bracket
⑦ Water hoses
⑧ Injection pump
⑨ Key

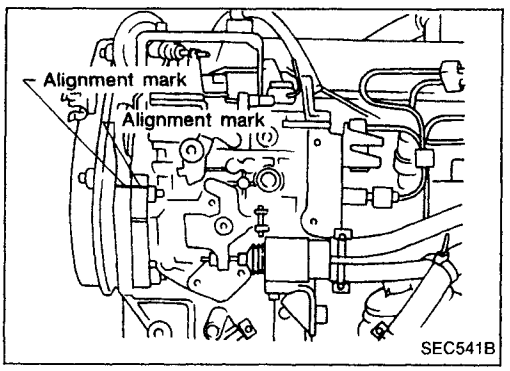

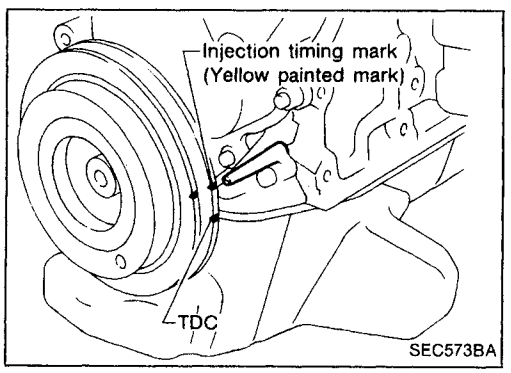

Removal

1. Put a matchmark across injection pump and injection pump bracket.
2. Disconnect battery ⊖ cable, electrical connectors and accelerator wire.
3. Set No. 1 piston at TDC on its compression stroke.
   TDC: Crankshaft pulley notch without painted mark
4. Disconnect water hoses for cold start device.
5. Remove fuel hoses (supply, return and spill) and injection tubes.
6. Remove air duct and injection pump timing belt cover.
7. Remove injection pump timing belt.
   Refer to EM section ("Injection Pump Timing Belt").

Simpo PDF Merge and Split Unregistered Version - http://www.simpopdf.com

Removal (Cont'd)

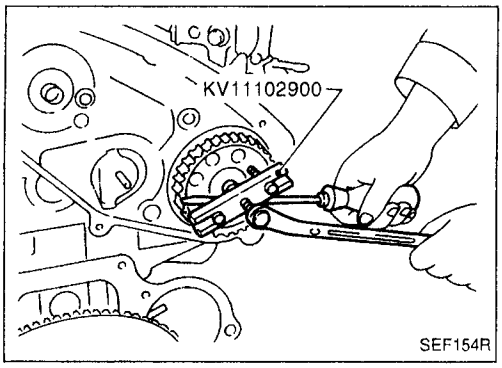

8. Remove injection pump sprocket with Tool.
- **Remove key from injection pump shaft and store safely.**

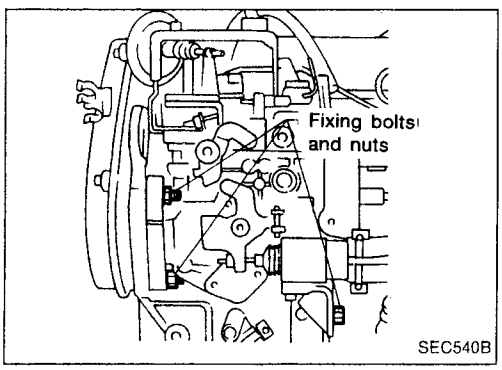

9. Remove injection pump assembly.

EC

Installation

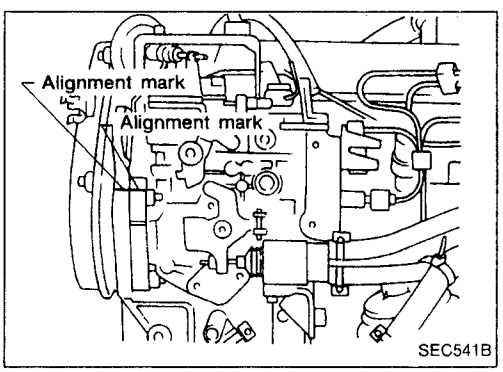

1. With matchmarks aligned, install injection pump.

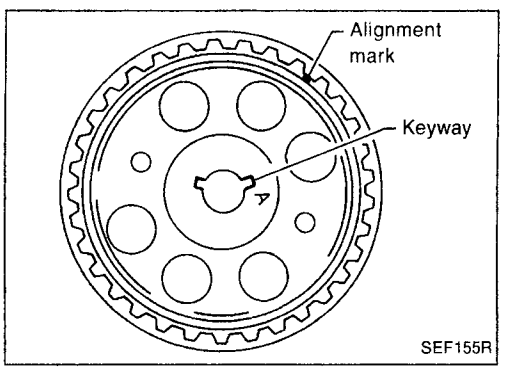

2. Install key on injection pump shaft, then install injection pump sprocket.
- Use mark "A" on sprocket.

3. Install injection pump timing belt.
Refer to EM section ("Injection Pump Timing Belt").

4. Adjust injection timing.
Refer to "Adjustment" on the next page.
5. Install all parts removed.

Simpo PDF Merge and Split Unregistered Version - http://www.simpopdf.com

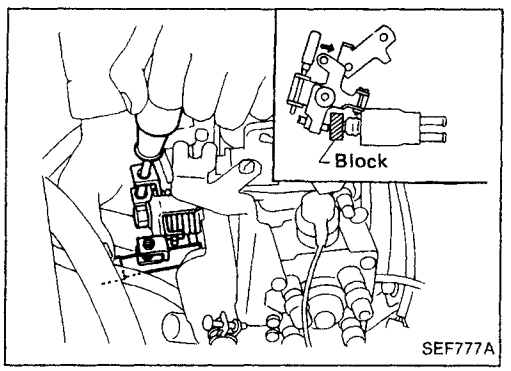

Adjustment

INJECTION TIMING ADJUSTMENT (Plunger lift adjustment)

Preparation of cold start device

1. Turn cold start device linkage clockwise.
2. Set a suitable block [Thickness: about 15 mm (0.59 in)] between cold start device plunger and linkage rod.
3. Turn crankshaft 2 turns clockwise to set the device to normal position.

Checking

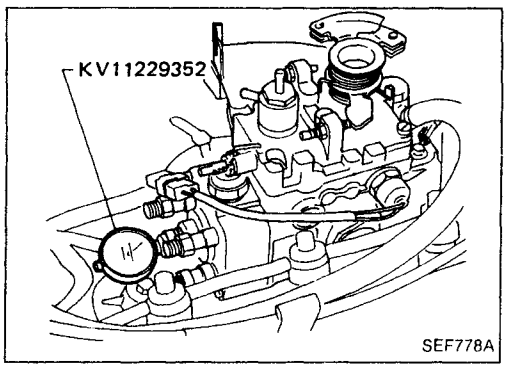

1. Set No. 1 piston at TDC on its compression stroke.
   TDC: Without painted mark
2. Remove injection tubes and air bleeder on the back of injection pump.
3. Set dial gauge so its indicator points to somewhere between 1.0 and 2.0 mm (0.039 and 0.079 in) on the scale.
4. Turn crankshaft 1 turn clockwise and check that dial gauge indicates the same value again.

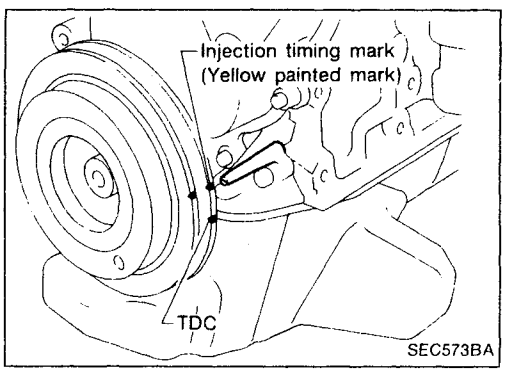

5. Turn crankshaft counterclockwise about 20 to 25 degrees, then set dial gauge indicator to 0 mm (0 in).
6. Turn crankshaft clockwise and set the pump timing mark to the mark on the crankshaft pulley.
   Pump timing mark: Yellow painted mark
   Injection timing: 8° BTDC
7. Read plunger lift.
   Plunger lift:
   0.79 - 0.85 mm (0.0311 - 0.0335 in) at pump timing mark

- **When repeating the checking, start with step 5.**

Adjusting

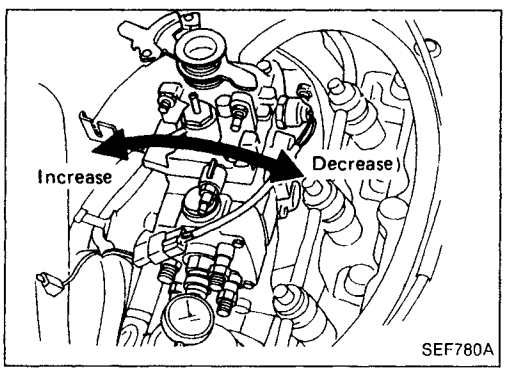

1. If plunger lift is not within the specified value, adjust by turning injection pump.

- **If indication is smaller than the specified value, turn pump body away from engine.**
- **If indication is larger than the specified value, turn pump body towards engine.**

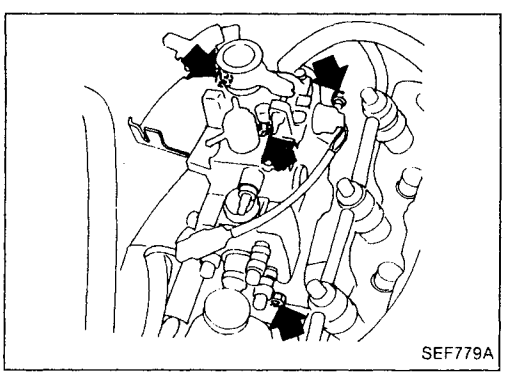

2. Tighten injection pump securing bolts and nuts.
   Nut:
   : 13 - 18 N·m (1.3 - 1.8 kg-m, 9 - 13 ft-lb)
   Bolt:
   : 49 - 59 N·m (5.0 - 6.0 kg-m, 36 - 43 ft-lb)
3. Remove dial gauge and install air bleeder with new washer.
4. Install injection tubes.
   Flare nut:
   : 22 - 25 N·m (2.2 - 2.5 kg-m, 16 - 18 ft-lb)
5. Bleed air from fuel system.

Refer to "Water Draining, Fuel Filter Check and Replacement" of "ENGINE MAINTENANCE" in MA section.

Simpo PDF Merge and Split Unregistered Version - http://www.simpopdf.com

Adjustment (Cont'd)

IDLE SPEED AND MAXIMUM SPEED ADJUSTMENT

CAUTION:

- **Do not remove sealing caps unless absolutely necessary.**
- **Never disturb full-load adjusting screw because this alters the mixture ratio and may result in serious engine problems.**
- **Do not adjust maximum speed adjusting screw to a point exceeding specifications, because exceeding the maximum speed may cause engine damage.**
- **When attaching tachometer pickup, remove fuel tube clamps. (Refer to tachometer instructions.)**

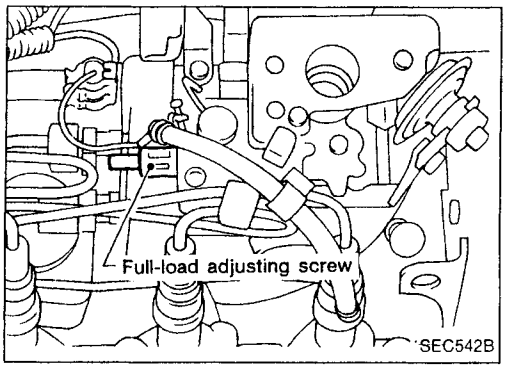

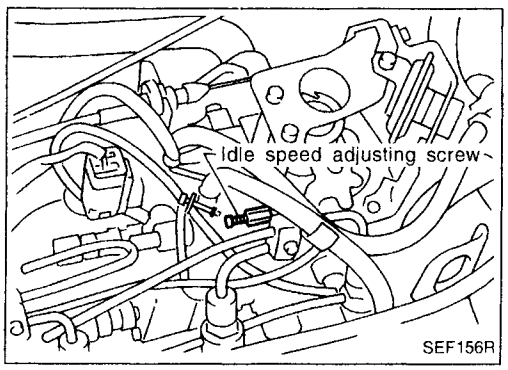

Idle speed adjustment

- Refer to MA section.
  Idle speed: 700^{+50}_{-0} rpm

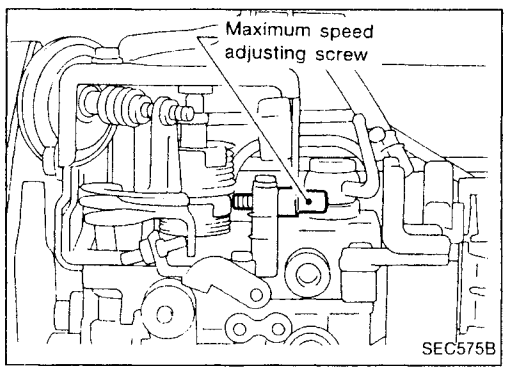

Maximum speed adjustment

1. Start engine and warm it up until coolant temperature indicator points to middle of gauge.
2. Connect tachometer pickup to No. 1 fuel injection tube.
   - Refer to the instructions on tachometer.
3. Depress accelerator pedal fully under no-load and read the tachometer indication.
   Maximum engine speed (Under no-load):
   5,400 rpm
4. If indication is lower than specified maximum engine speed, adjust using maximum speed adjusting screw.
5. After adjustment, tighten lock nut securely and plug it with a sealing cap.

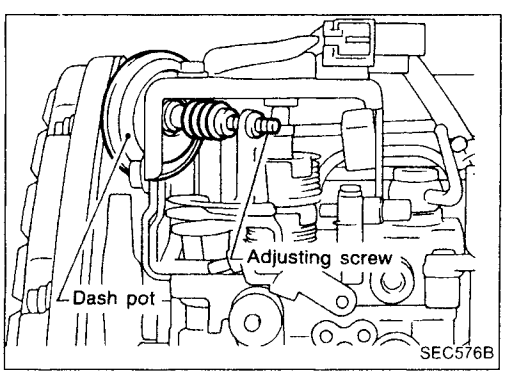

Dash pot adjustment

1. Warm up engine to normal operating temperature.
2. Attach tachometer and adjust touch speed using adjusting screw.
   Touch speed: 1,300 rpm

Simpo PDF Merge and Split Unregistered Version - http://www.simpopdf.com

CAUTION:
Plug flare nut with a cap or rag so that no dust enters the nozzle. Cover nozzle tip for protection of needle.

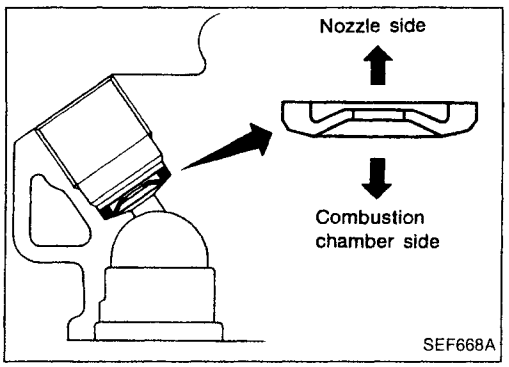

Removal and Installation

1. Remove fuel injection tube and spill tube.
2. Remove injection nozzle assembly.

Also remove washers from nozzle end.

3. Install injection nozzle in the reverse order of removal.

Injection nozzle to engine:
: 59 - 69 N·m (6.0 - 7.0 kg-m, 43 - 51 ft-lb)
Injection nozzle to tube:
: 22 - 25 N·m (2.2 - 2.5 kg-m, 16 - 18 ft-lb)
Spill tube:
: 39 - 49 N·m (4.0 - 5.0 kg-m, 29 - 36 ft-lb)

a. Always clean the nozzle holes.
b. Always use new injection nozzle gasket.
c. Note that small washer should be installed in specified direction.
d. Bleed air from fuel system.

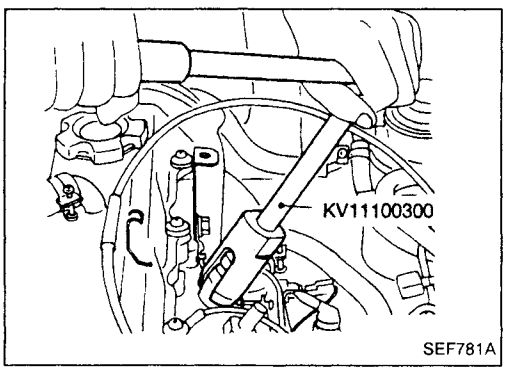

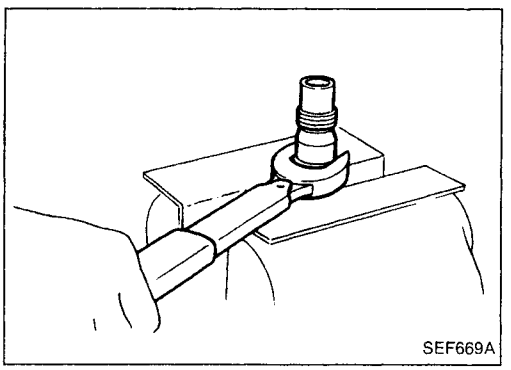

Disassembly

1. Loosen nozzle nut while preventing nozzle top from turning.

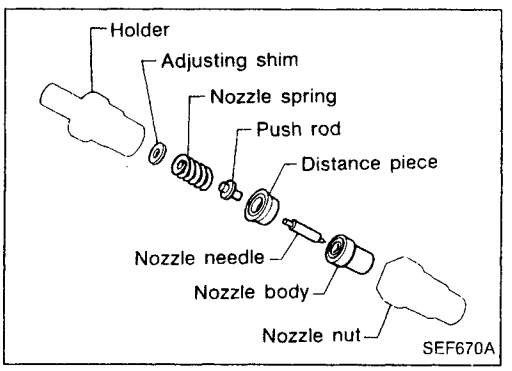

2. Arrange all disassembled parts in the order shown at left.

Simpo PDF Merge and Split Unregistered Version - http://www.simpopdf.com

Inspection

Thoroughly clean all disassembled parts with fresh kerosene or solvent.

- If nozzle needle is damaged or fused, replace nozzle assembly with a new one.
- If end of nozzle needle is seized or excessively discolored, replace nozzle assembly.
- Check nozzle body and distance piece for proper contact. If excessively worn or damaged, replace nozzle assembly or distance piece.
- Check distance piece and nozzle holder for proper contact. If excessively worn or damaged, replace distance piece or nozzle holder.
- Check nozzle spring for excessive wear or damage. If excessively worn or damaged, replace it with a new spring.

Cleaning

a. Do not touch the nozzle mating surface with your fingers.
b. To wash the nozzles, use a wooden stick and brass brush with clean diesel fuel.

1. Remove any carbon from exterior of nozzle body (except wrapping angle portion) by using Tool.

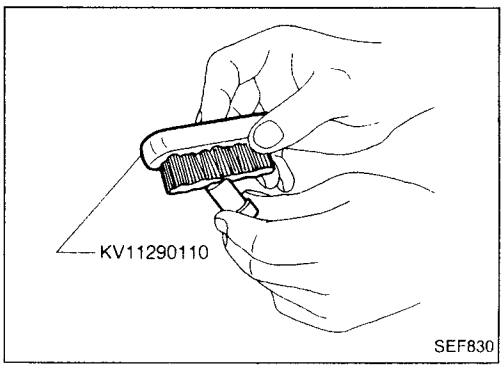

2. Clean oil sump of nozzle body using Tool.

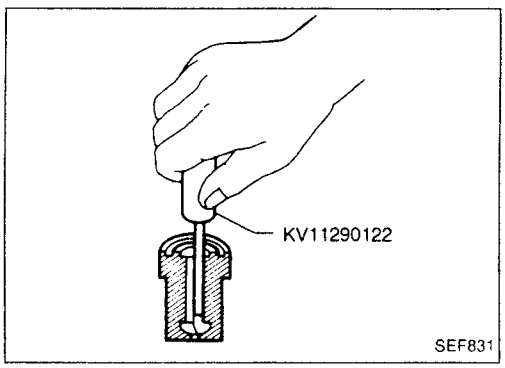

3. Clean nozzle seat by using Tool.

This job should be performed with extra precautions, since efficiency of nozzle depends greatly on a good nozzle seat.

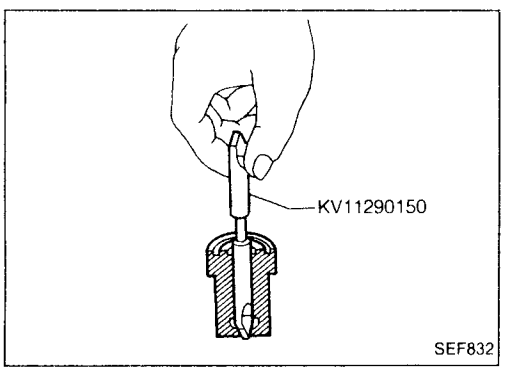

Simpo PDF Merge and Split Unregistered Version - http://www.simpopdf.com

Cleaning (Cont'd)

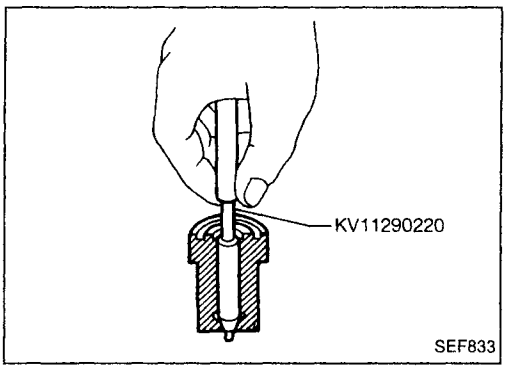

4. Clean spray hole of nozzle body by using Tool.

To prevent spray hole from canting, always clean it by starting with inner side and working towards outside.

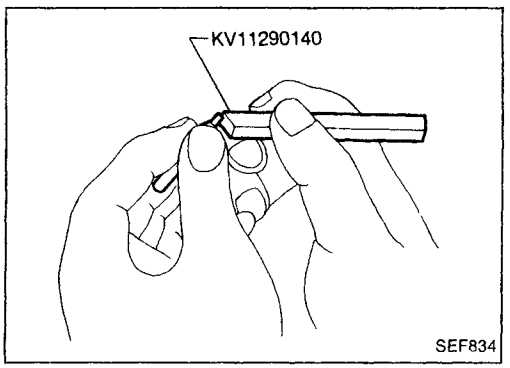

5. Decarbonate nozzle needle tip by using Tool.

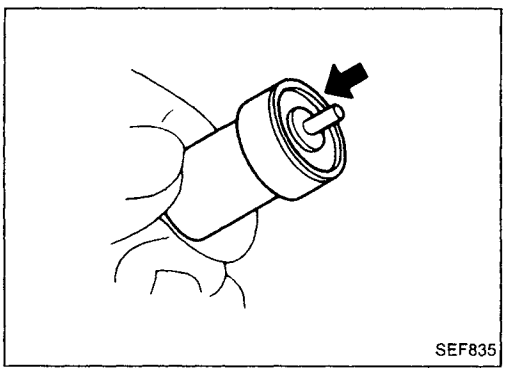

6. Check needle sinking.
(1) Pull needle about halfway out from body and then release it.
(2) Needle should sink into body very smoothly from just its own weight.
(3) Repeat this test and rotate needle slightly each time.

If needle fails to sink smoothly from any position, replace both needle and body as a unit.

Assembly

Assemble in the reverse order of disassembly, observing the following.

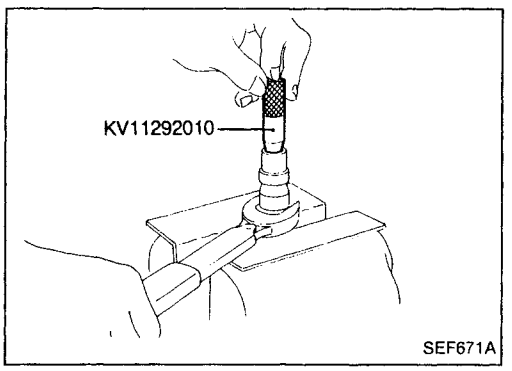

If nozzle body is not installed properly, Tool cannot be removed and nozzle body may be damaged.

Holder to nozzle nut:

: 78 - 98 N·m (8.0 - 10.0 kg-m, 58 - 72 ft-lb)

Simpo PDF Merge and Split Unregistered Version - http://www.simpopdf.com

Test and Adjustment

WARNING:
When using nozzle tester, be careful not to allow diesel fuel sprayed from nozzle to contact your hands or body, and make sure your eyes are properly protected with goggles.

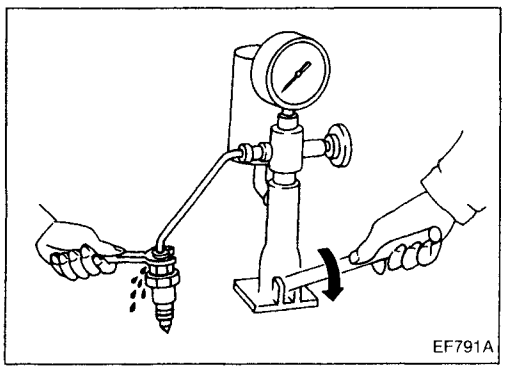
EF791A

INJECTION PRESSURE TEST

1. Install nozzle to injection nozzle tester and bleed air from flare nut.

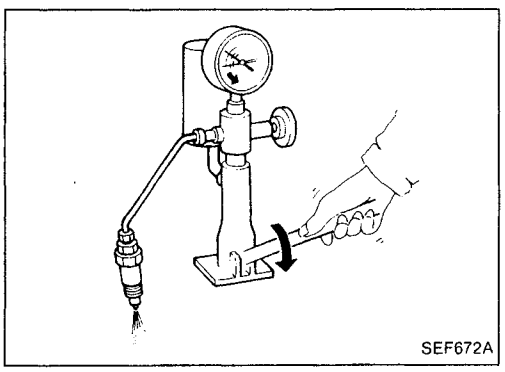
SEF672A

2. Pump the tester handle slowly (one time per second) and watch the pressure gauge.
3. Read the pressure gauge when the injection pressure just starts dropping.

Initial injection pressure:
Used
12,259 - 13,239 kPa (122.6 - 132.4 bar, 125 - 135 kg/cm^2, 1,778 - 1,920 psi)
New
12,749 - 13,534 kPa (127.5 - 135.3 bar, 130 - 138 kg/cm^2, 1,849 - 1,962 psi)

Always check initial injection pressure using a new nozzle.

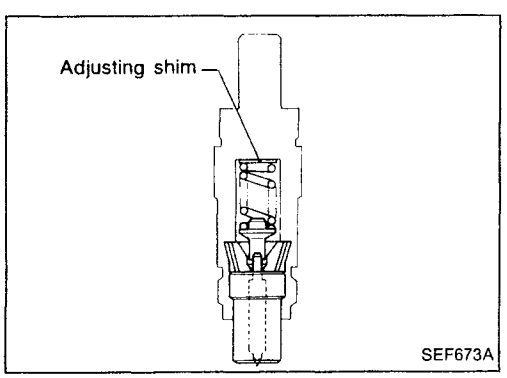

SEF673A

4. To adjust injection pressure, change adjusting shims.

a. Increasing the thickness of adjusting shims increases initial injection pressure. Decreasing thickness reduces initial pressure.
b. A shim thickness of 0.04 mm (0.0016 in) corresponds approximately to a difference of 471 kPa (4.71 bar, 4.8 kg/cm^2, 68 psi) in initial injection pressure.

Refer to SDS for adjusting shim (EC-419).

Simpo PDF Merge and Split Unregistered Version - http://www.simpopdf.com

Test and Adjustment (Cont'd)

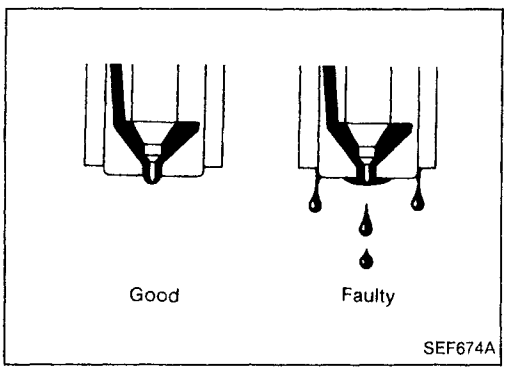

LEAKAGE TEST

1. Maintain the pressure at about 981 to 1,961 kPa (9.8 to 19.6 bar, 10 to 20 kg/cm^2, 142 to 284 psi) below initial injection pressure.
2. Check that there is no dripping from the nozzle tip or around the body.
3. If there is leakage, clean, overhaul or replace nozzle.

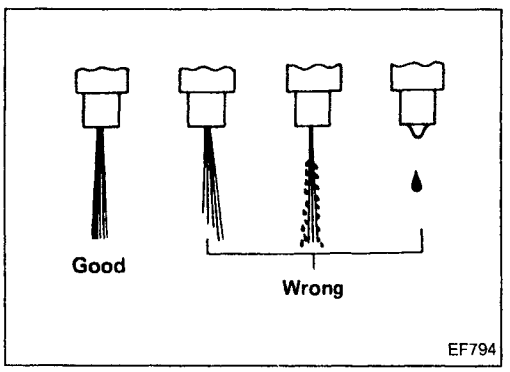

SPRAY PATTERN TEST

1. Pump the tester handle one time per second.
2. Check the spray pattern.
3. If the spray pattern is not correct, clean or replace nozzle.

Simpo PDF Merge and Split Unregistered Version - http://www.simpopdf.com

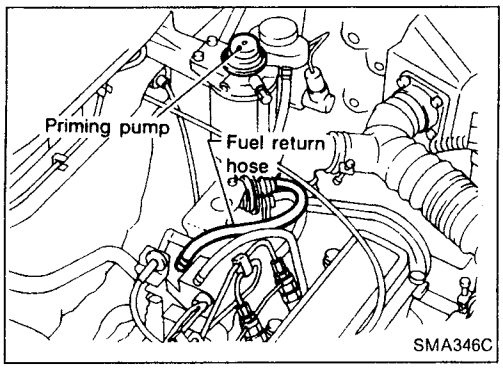

Priming Pump Check

Before checking priming pump, make sure that fuel filter is filled with fuel.

1. Disconnect fuel return hose.

Place a suitable container beneath hose end.

2. Pump priming pump and check that the fuel overflows from the hose end. If not, replace priming pump.

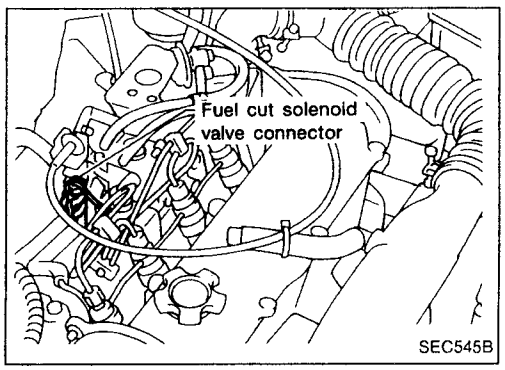

Fuel Cut Solenoid Valve

1. Disconnect fuel cut solenoid valve harness connector and check voltage.

Ignition switch	Voltage
OFF	0V
ON	Battery voltage

2. Check fuel cut solenoid valve for circuit continuity.
3. Remove fuel cut solenoid valve and check that plunger moves smoothly and that spring is normal.

EC

Simpo PDF Merge and Split Unregistered Version - http://www.simpopdf.com

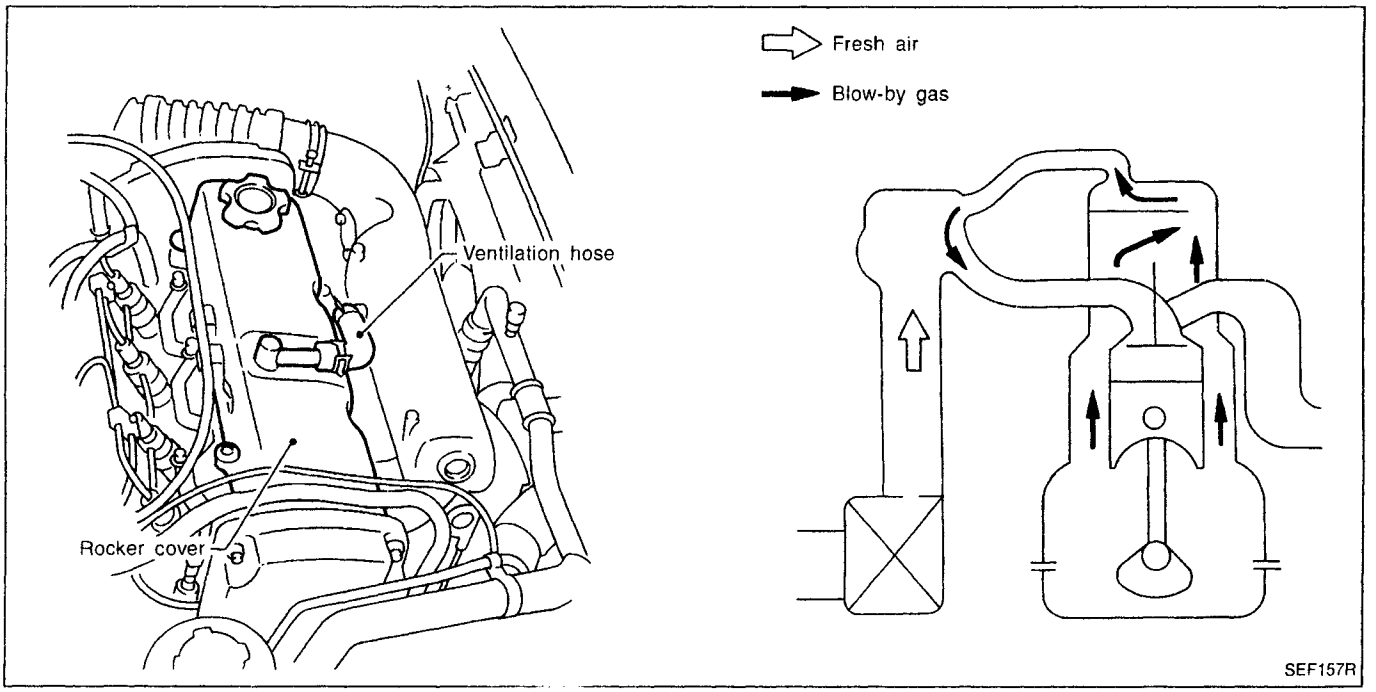

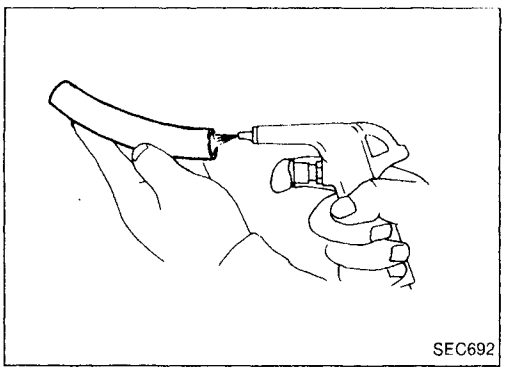

Ventilation Hose

1. Check hoses and hose connections for leaks.
2. Disconnect all hoses and clean with compressed air. If any hose cannot be freed of obstructions, replace.

Simpo PDF Merge and Split Unregistered Version - http://www.simpopdf.com

Component Parts Location

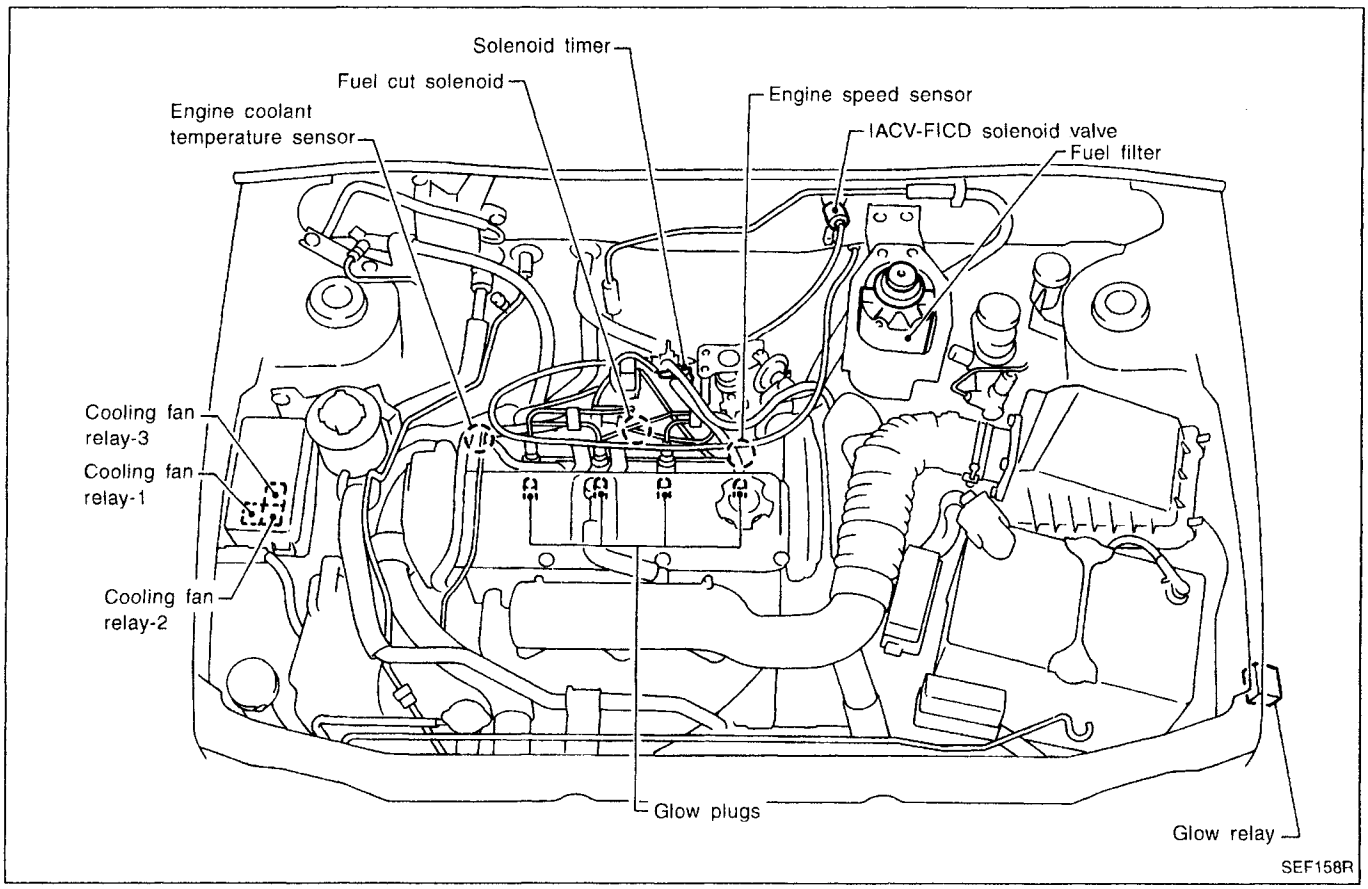

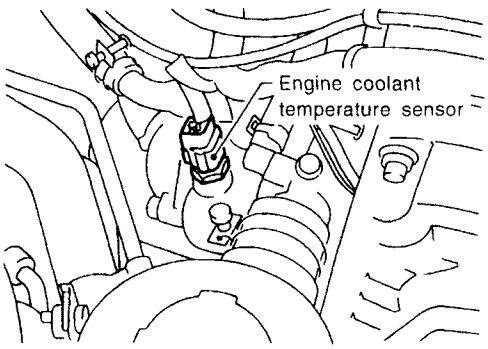

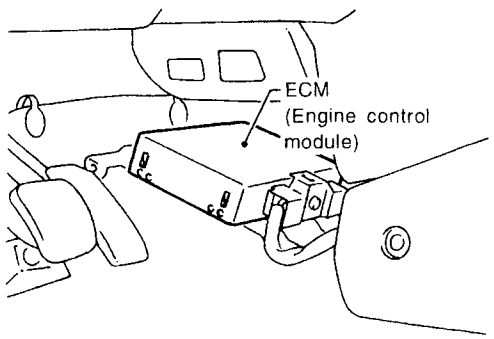

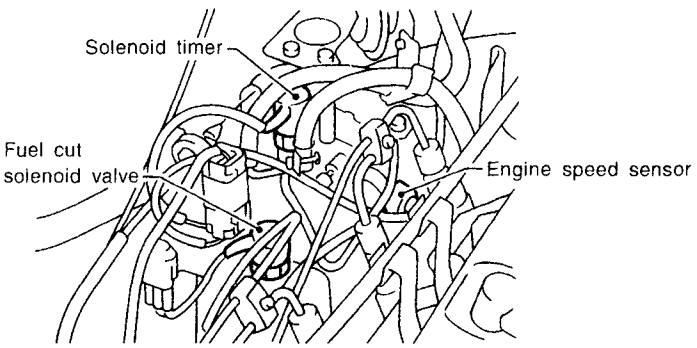

Simpo PDF Merge and Split Unregistered Version - http://www.simpopdf.com

System Diagram

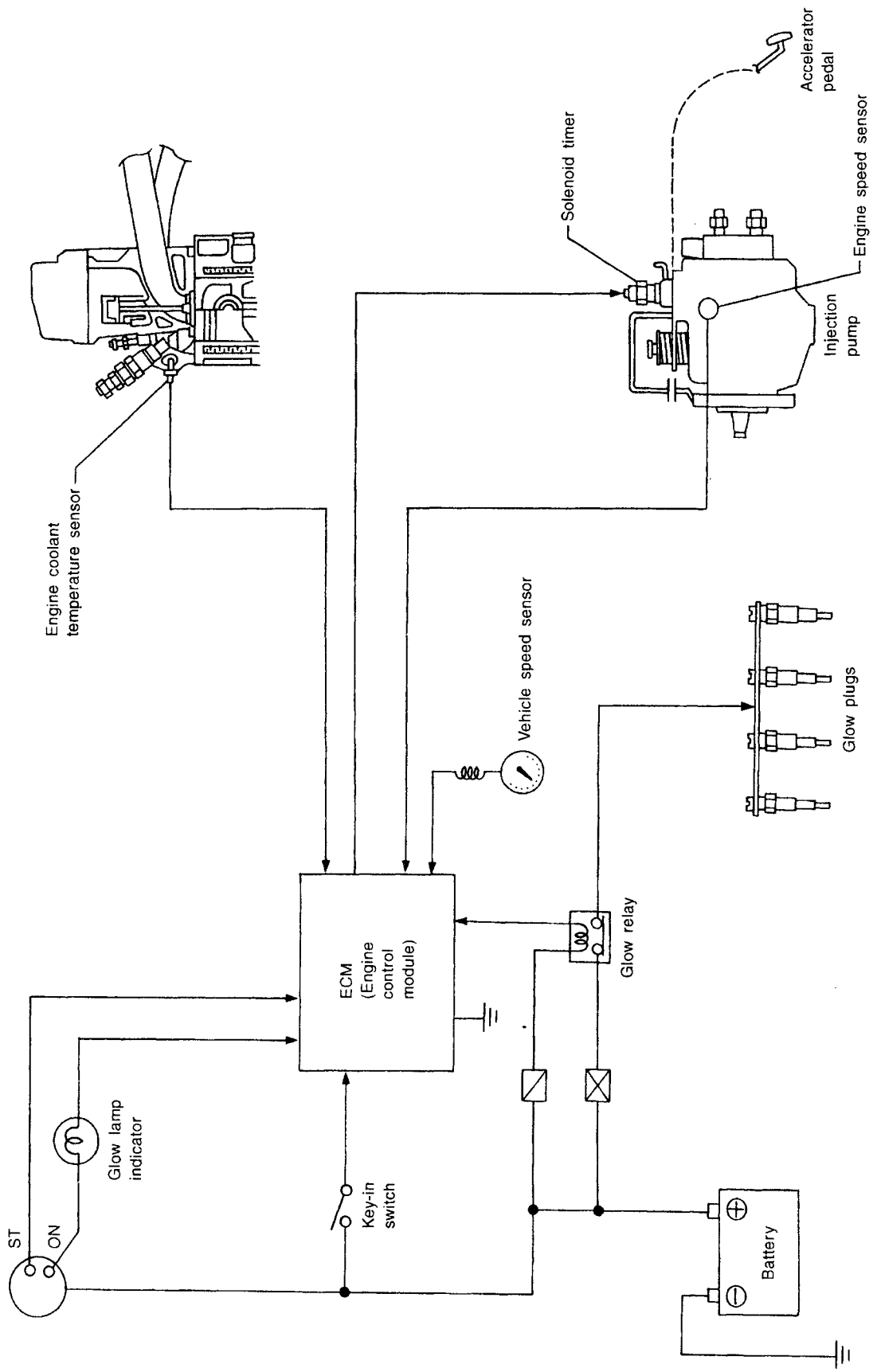

SEF160R

Simpo PDF Merge and Split Unregistered Version - http://www.simpopdf.com

Circuit Diagram

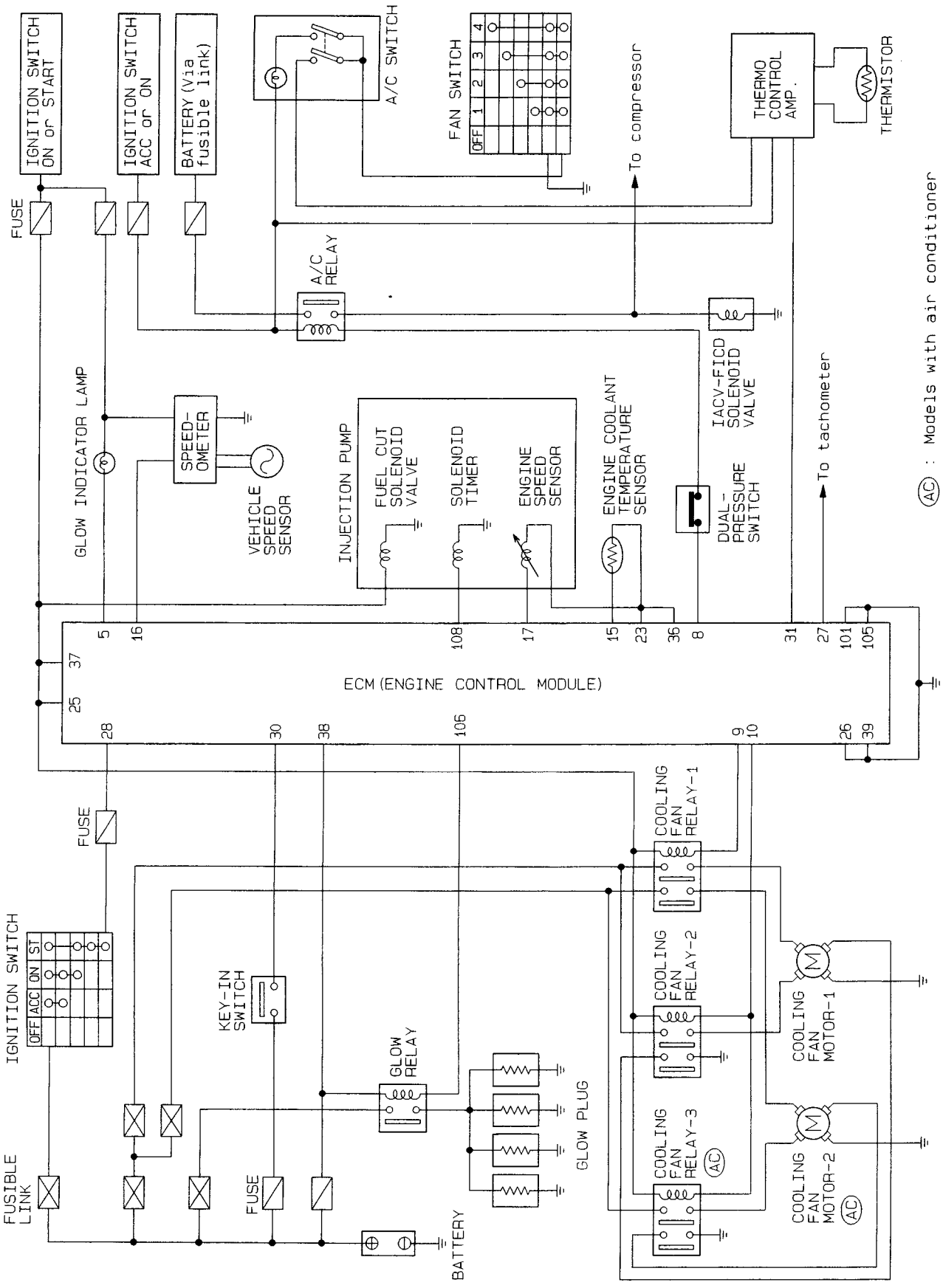

HEC087

Simpo PDF Merge and Split Unregistered Version - http://www.simpopdf.com

System Chart

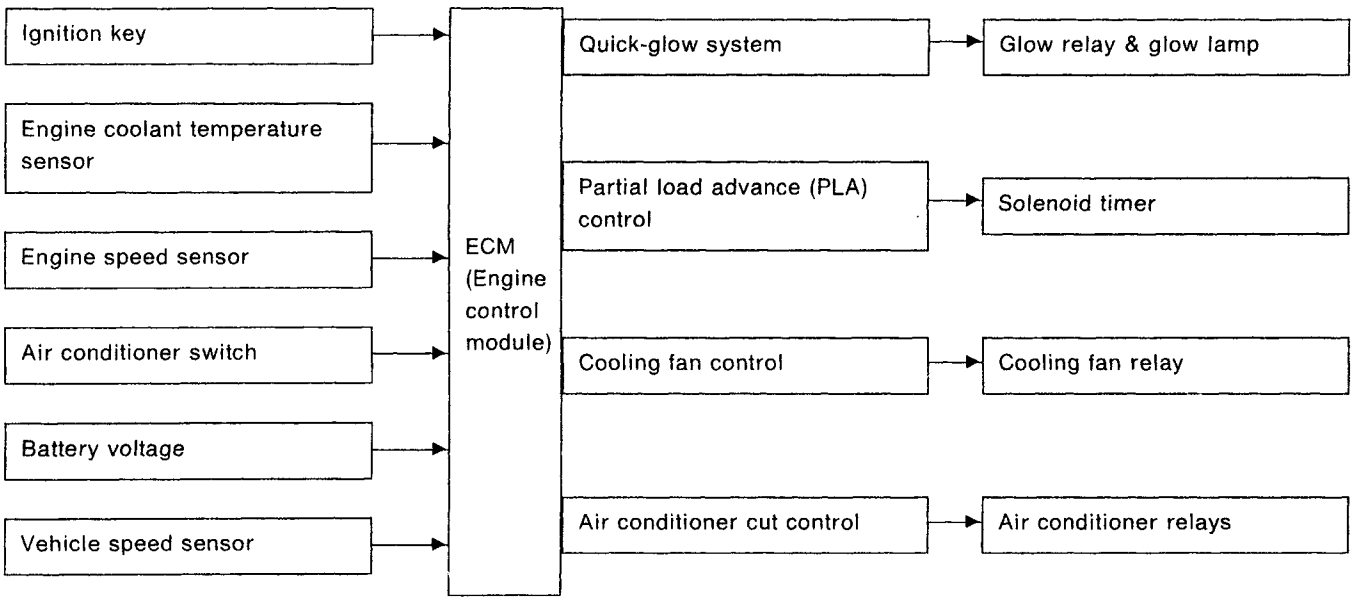

Simpo PDF Merge and Split Unregistered Version - http://www.simpopdf.com

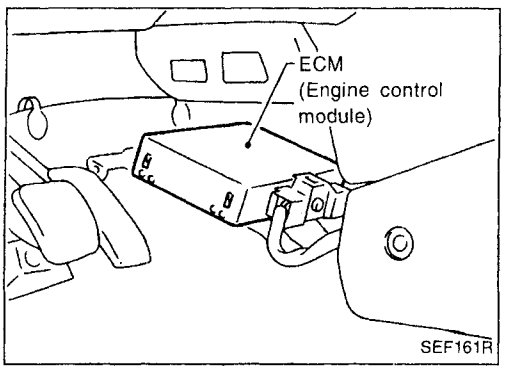

ECM Terminals and Reference Values

PREPARATION

1. ECM is located behind the center console panel. For this inspection, remove the center console under cover.

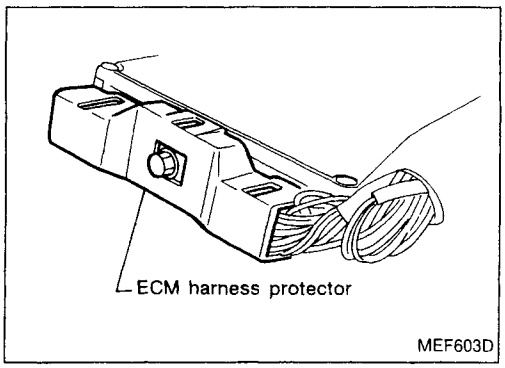

2. Remove ECM harness protector.

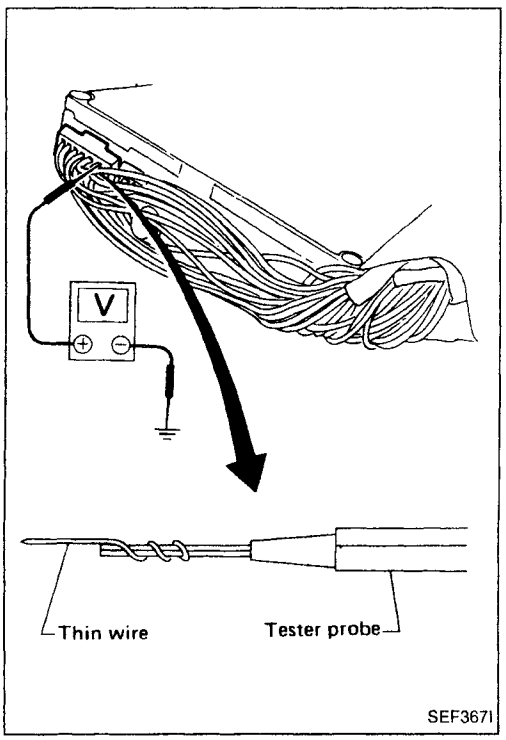

3. Perform all voltage measurements with the connectors connected. Extend tester probe as shown to perform tests easily.

ECM HARNESS CONNECTOR TERMINAL LAYOUT

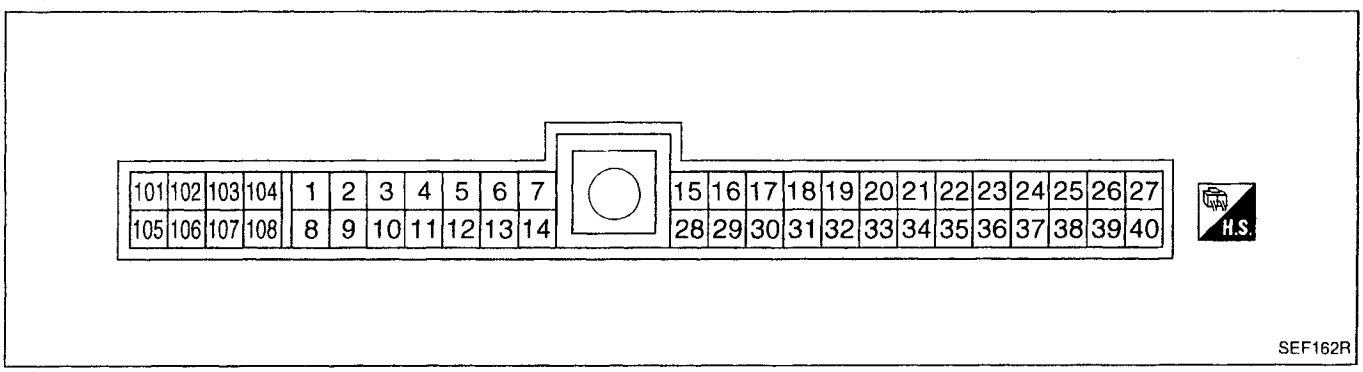

Simpo PDF Merge and Split Unregistered Version - http://www.simpopdf.com

ECM Terminals and Reference Values (Cont'd)

ECM INSPECTION TABLE

*Data are reference values.

TER-MINAL NO.	ITEM	CONDITION	*DATA
8	Air conditioner relay	Engine is running. └ Both A/C switch and blower fan switch are "ON".	Approximately 0V
		Engine is running. └ A/C switch is "OFF".	BATTERY VOLTAGE (11 - 14V)
9	Cooling fan relay (Low speed)	Engine is running. └ Cooling fan is not operating.	BATTERY VOLTAGE (11 - 14V)
		Engine is running. └ Cooling fan is operating.	1V
10	Cooling fan relay (High speed)	Engine is running. ├ Cooling fan is not operating. └ Cooling fan is operating at low speed.	BATTERY VOLTAGE (11 - 14V)
		Engine is running. └ Cooling fan is operating at high speed.	1V
15	Engine coolant temperature sensor	Engine is running.	0 - 5.0V Output voltage varies with engine coolant temperature.
25 37	Power supply for ECM	Ignition switch "ON"	BATTERY VOLTAGE (11 - 14V)
28	Start signal	Ignition switch "ON"	Approximately 0V
		Ignition switch "START"	BATTERY VOLTAGE (11 - 14V)
30	Key-in switch	Ignition key is not inserted.	0V
		Ignition key is inserted.	BATTERY VOLTAGE (11 - 14V) [for 3 seconds at engine coolant temperature of approx. 60°C (140°F) or less]
31	Air conditioner switch	Engine is running. └ Both air conditioner switch and blower fan switch are "ON".	Approximately 0V
		Engine is running. └ Air conditioner switch is "OFF".	BATTERY VOLTAGE (11 - 14V)
38	Power supply	Ignition switch "OFF"	BATTERY VOLTAGE (11 - 14V)
106	Glow relay	Refer to "Quick-glow System".	

Simpo PDF Merge and Split Unregistered Version - http://www.simpopdf.com

ECM Terminals and Reference Values (Cont'd)

*Data are reference values.

TER-MINAL NO.	ITEM	CONDITION	*DATA
108	Solenoid timer	Engine is running. └ Engine coolant temperature is lower than 10°C (50°F).	BATTERY VOLTAGE (11 - 14V)
		Engine is running. └ Engine coolant temperature is higher than 10°C (50°F).	Approximately 0V

Simpo PDF Merge and Split Unregistered Version - http://www.simpopdf.com

Quick-glow System

SYSTEM DESCRIPTION

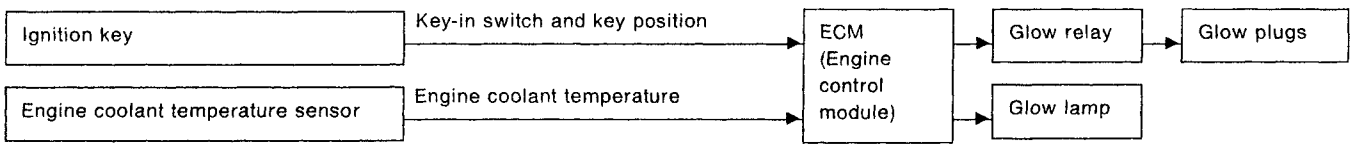

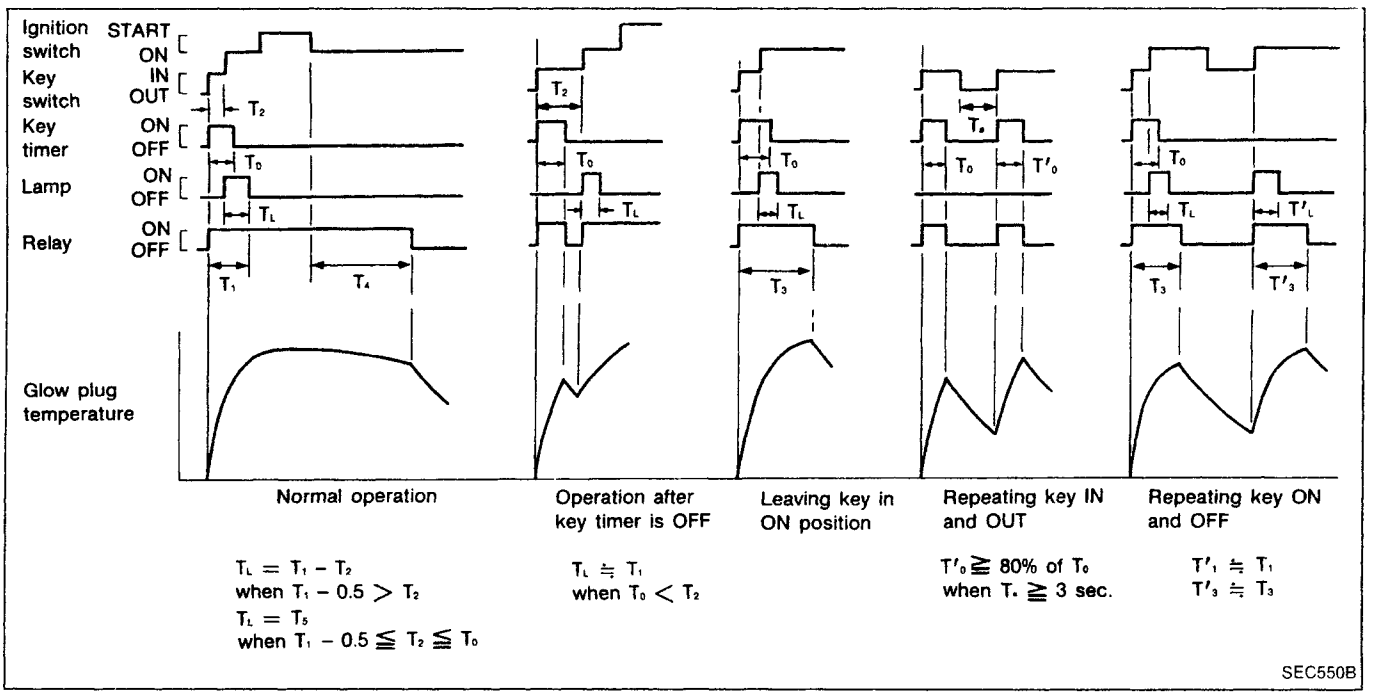

When the ignition key is inserted into the key cylinder, the engine control module turns on the relay and the "high-level" electric current flows through the glow plugs and heats them up quickly. When the ignition switch is turned on, the control module turns on the indicator. After T_1 seconds have passed from key in, the control module turns off the indicator.

While cranking, the relay remains on. The relay automatically turns off after T_4 seconds have passed from the engine start.

	Second	Engine coolant temperature sensor		Remarks
		Engine coolant temperature °C (°F)	Resistance (kΩ)	
T_0	3.1 - 3.9	—	—	
T_1	5.0 - 7.0	−25 (−13)	19.7	
	1.8 - 3.2	20 (68)	2.5	
	0.8 - 2.2	60 (140)	0.6	
T_3	17.0 - 23.0	Lower than 60 (140)	More than 0.6	
	4.0 - 6.0	Higher than 60 (140)	Less than 0.6	
T_4	255 - 345	Lower than 60 (140)	More than 0.6	When alternator is working
	Less than 10	Higher than 60 (140)	Less than 0.6	
(T_4)	15 - 25	Lower than 60 (140)	More than 0.6	When alternator is not working
	3 - 7	Higher than 60 (140)	Less than 0.6	
T_5	0.1 - 0.9	—	—	

Simpo PDF Merge and Split Unregistered Version - http://www.simpopdf.com

Quick-glow System (Cont'd)

DESCRIPTION

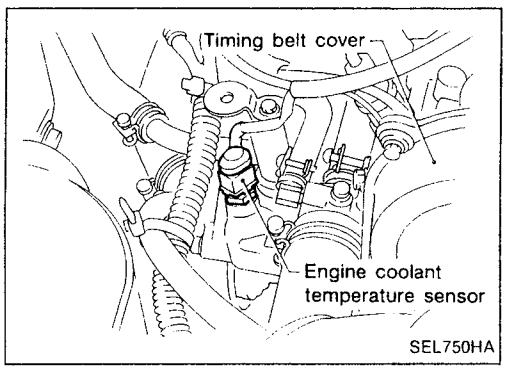

Engine coolant temperature sensor (ECTS)

The engine coolant temperature sensor detects engine coolant temperature and transmits a signal to the ECM.
Electrical resistance of the thermistor decreases in response to the temperature rise.

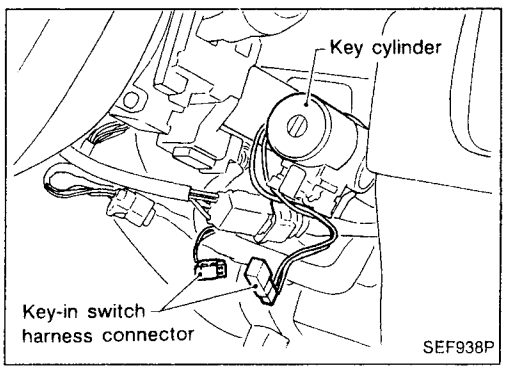

Key-in switch

The key-in switch is built into the key cylinder. The ECM detects the key position and controls the key-in glow system.

EC

Simpo PDF Merge and Split Unregistered Version - http://www.simpopdf.com

Quick-glow System (Cont'd)

EC-GLOW-01

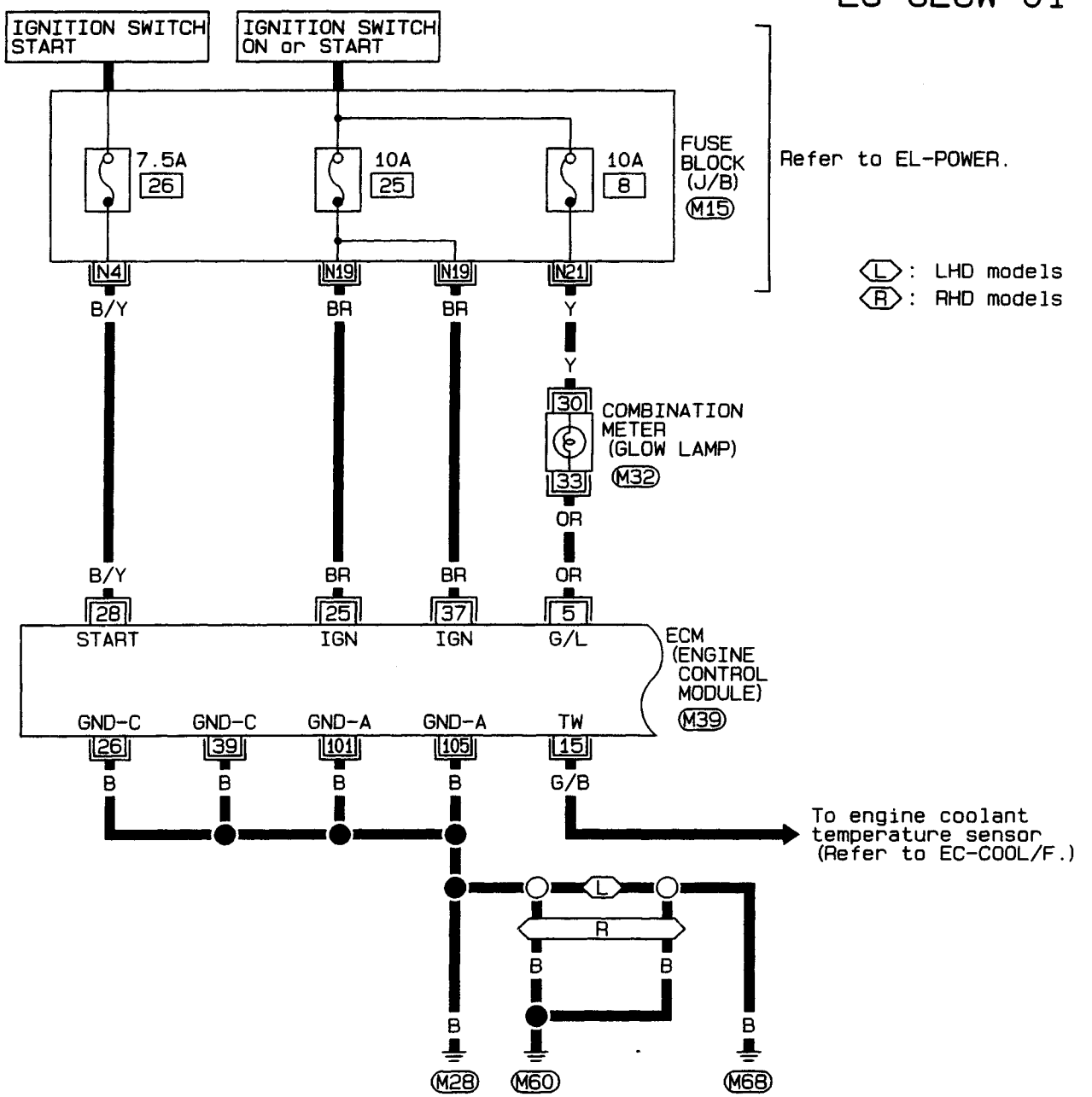



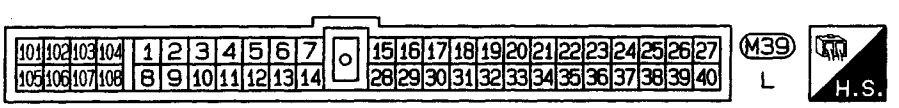

Refer to last page (Foldout page).

M15

HEC088

Simpo PDF Merge and Split Unregistered Version - http://www.simpopdf.com

Quick-glow System (Cont'd)

EC-GLOW-02

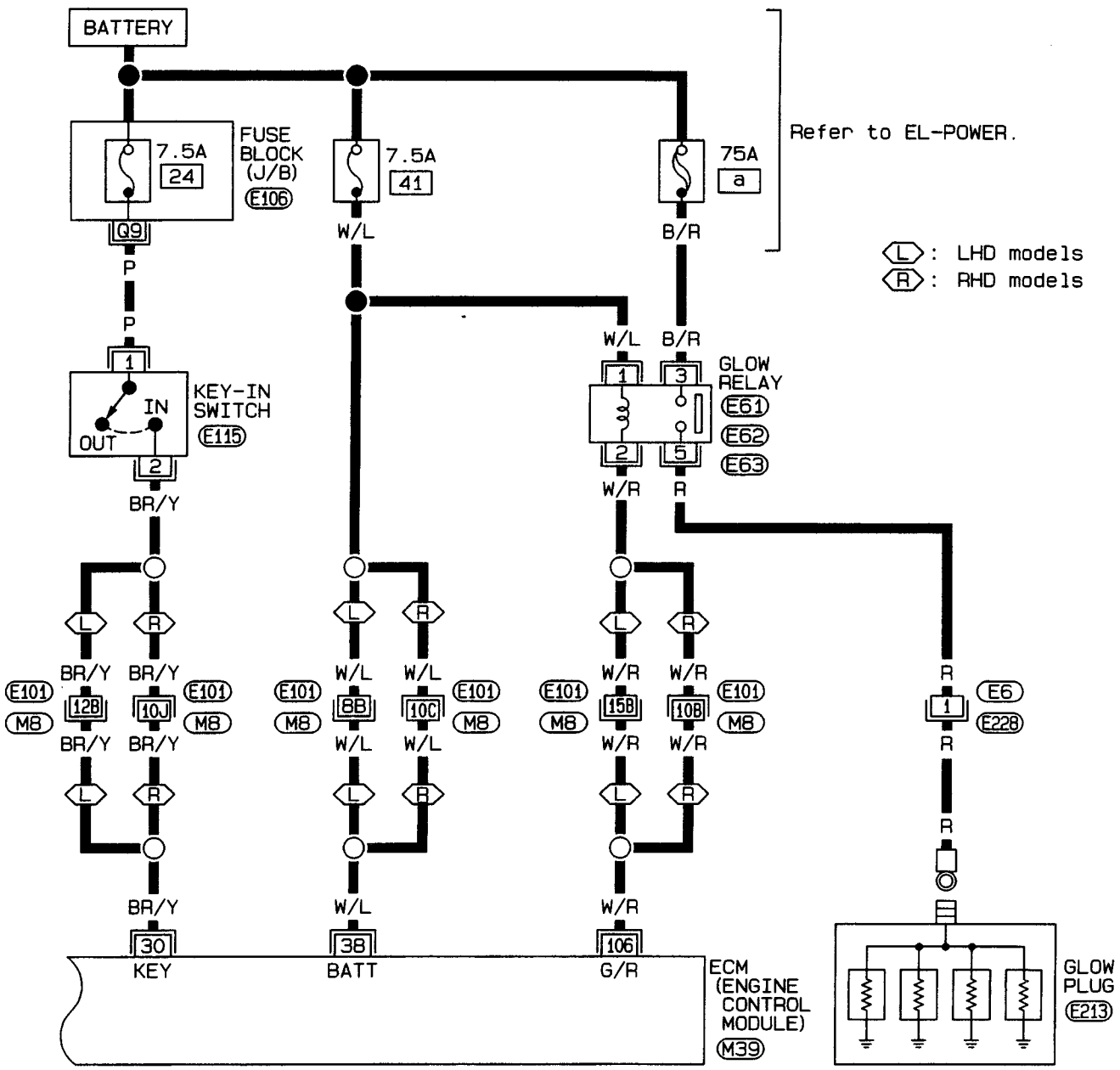

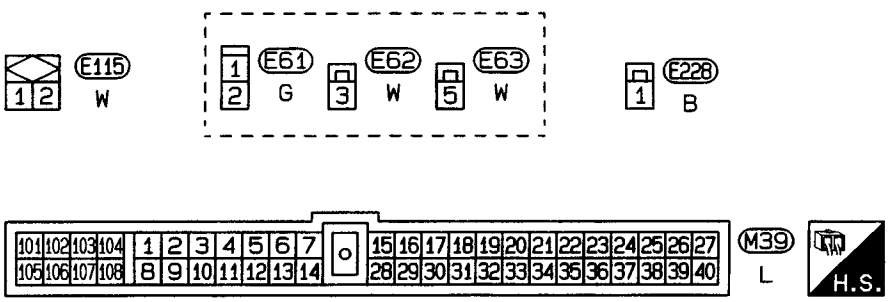

Refer to last page (Foldout page).

M8 , E101

E106

Simpo PDF Merge and Split Unregistered Version - http://www.simpopdf.com

Quick-glow System (Cont'd)

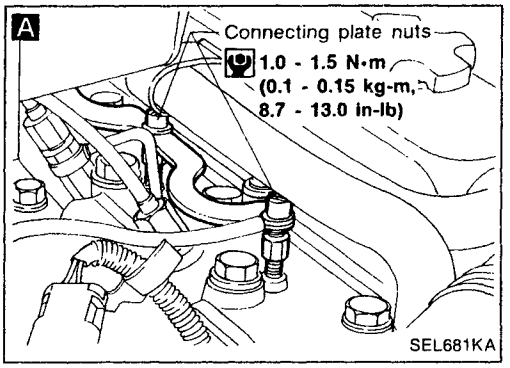

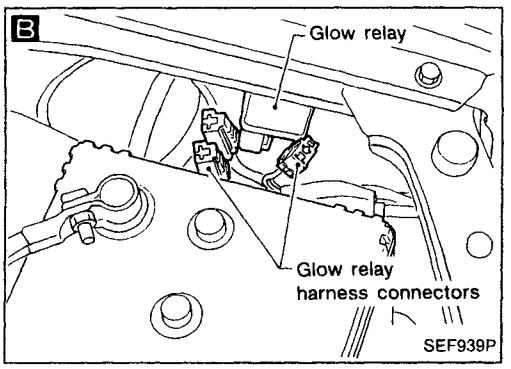

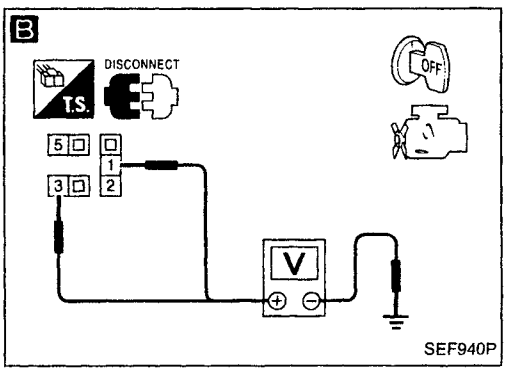

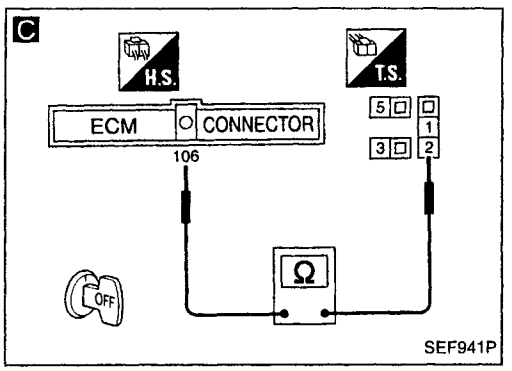

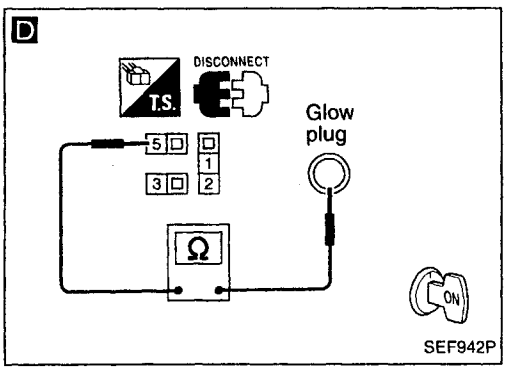

INSPECTION START

Check fuel level, fuel supplying system, starter motor, etc.
NG → Correct.

OK

A

Check that all glow plug connecting plate nuts are installed properly.
NG → Install properly.

OK

CHECK OVERALL FUNCTION.
Check entire quick-glow system. (Refer to "System Operation Check" on next page.)
OK → CHECK COMPONENT (Glow plug).
See page EC-397.

NG

CHECK POWER SUPPLY AND GROUND CIRCUIT.
(Refer to "Power Supply and ground circuit for ECM", EC-396).
NG → Repair harness or connector.

OK

B

CHECK VOLTAGE BETWEEN GLOW RELAY AND GROUND.
1) Check voltage between terminals ①, ③ and ground with tester.
Voltage: Battery voltage
NG → Check the following.
- 7.5A fuse
- 75A fusible link
- Harness continuity between glow relay and fuse

If NG, repair harness or connectors.

OK

C

CHECK OUTPUT SIGNAL CIRCUIT.
1) Check harness continuity between ECM terminal (106) and terminal ②.
Continuity should exist.
NG → Repair harness or connectors.

OK

D

CHECK HARNESS CONTINUITY BETWEEN GLOW RELAY AND GLOW PLUG.
1) Disconnect ECM harness connector.
2) Disconnect glow relay.
3) Check harness continuity between glow relay terminal ⑤ and glow plug.
Continuity should exist.
NG → Repair harness or connectors.

OK

Ⓐ

Simpo PDF Merge and Split Unregistered Version - http://www.simpopdf.com

Quick-glow System (Cont'd)

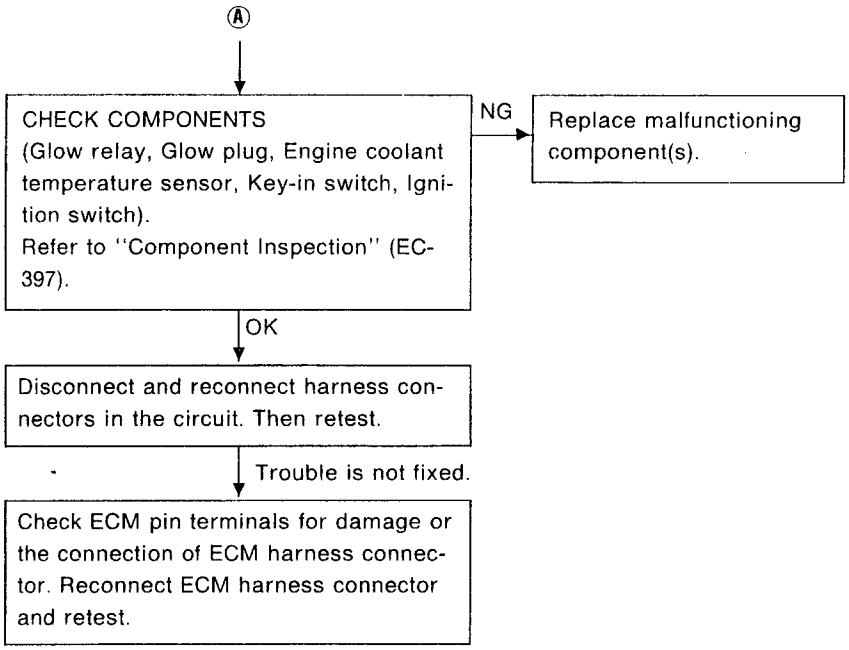

EC

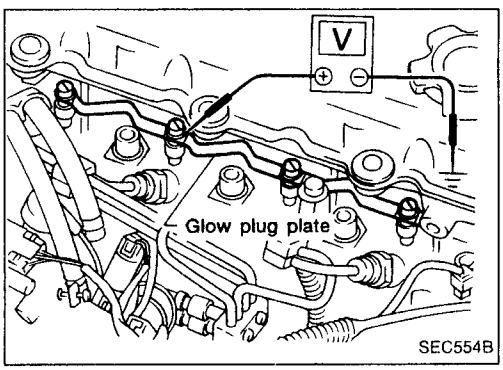

SYSTEM OPERATION CHECK

Set voltmeter between glow plug and engine body.

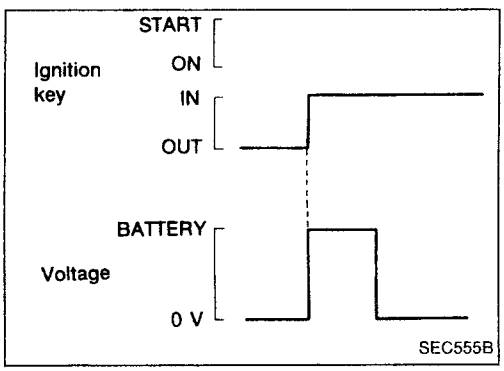

1. Key-in glow system
- Read voltage when ignition key is inserted into ignition switch.

Voltage:

Battery voltage for about 3 seconds

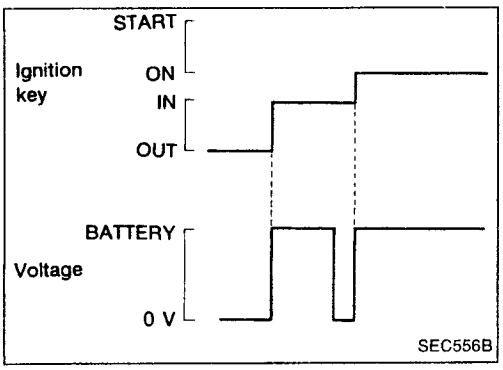

2. Quick-glow (Pre-glow) system

1) Turn ignition switch "ON" 3 or more seconds after key-in.
2) Read voltage.

Voltage:

Battery voltage for about 20* seconds

*** Coolant temperature is lower than 60°C (140°F).**

*** Repeating ignition key "ON" and "OFF" may change the time.**

Simpo PDF Merge and Split Unregistered Version - http://www.simpopdf.com

Quick-glow System (Cont'd)

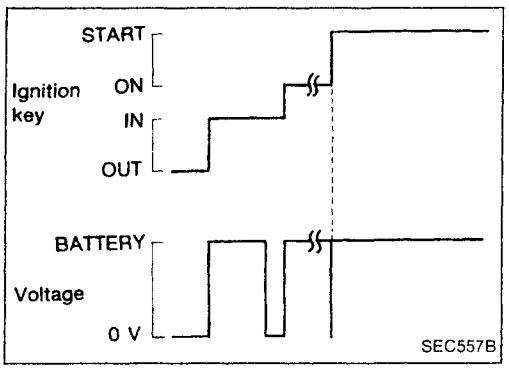

3. Quick-glow (Cranking) system
1) Disconnect "S" terminal for starter motor to prevent engine from cranking.
2) Read voltage when ignition key is turned to "START".
Voltage:
Battery voltage*
*** For about 20 seconds after returning ignition switch to "ON".**

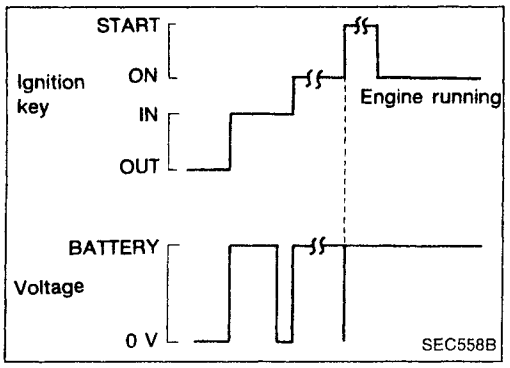

4. After-glow system
1) Connect "S" terminal to starter motor.
2) Start engine and read voltage.
Voltage:
Battery voltage for 5* minutes
*** Coolant temperature is lower than 60°C (140°F).**

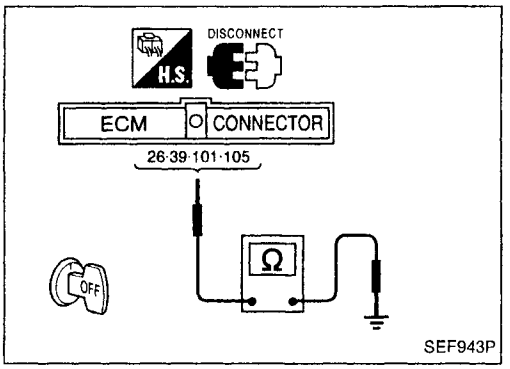

POWER SUPPLY AND GROUND CIRCUIT FOR ECM

1. Disconnect "S" terminal for starter motor to prevent engine from cranking.
2. Disconnect ECM harness connector.
3. Check terminals (26), (39), (101), (105) for ground continuity.
Continuity should exist (0Ω).

- If NG, check ground harness.

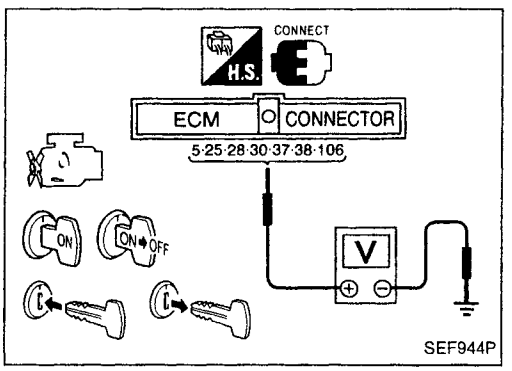

4. Check voltage at each terminal according to the following chart.

Terminal No.	Ignition switch position		Voltage
(38)	OFF (Not inserted)		Battery voltage
(106)	OFF (Not inserted)		
(30)	OFF (Not inserted)		0V
	OFF (Inserted)		Battery voltage
(25), (37)	OFF		0V
	ON	START	Battery voltage
(5)	OFF		0V
	ON	START	Battery voltage
(28)	OFF	ON	0V
	START		Battery voltage

Simpo PDF Merge and Split Unregistered Version - http://www.simpopdf.com

Quick-glow System (Cont'd)

- If NG, check component parts and their related harness according to the following chart.

Terminal No.	Parts which should be checked						
	Battery	Fuse /Fusible link	Glow relay	Key-in switch	Ignition switch	Glow indicator bulb	Harness
38	X	X					X
106	X	X	X				X
30	X	X		X			X
25, 37	X	X			X		X
5	X	X			X	X	X
28	X	X			X		X

EC

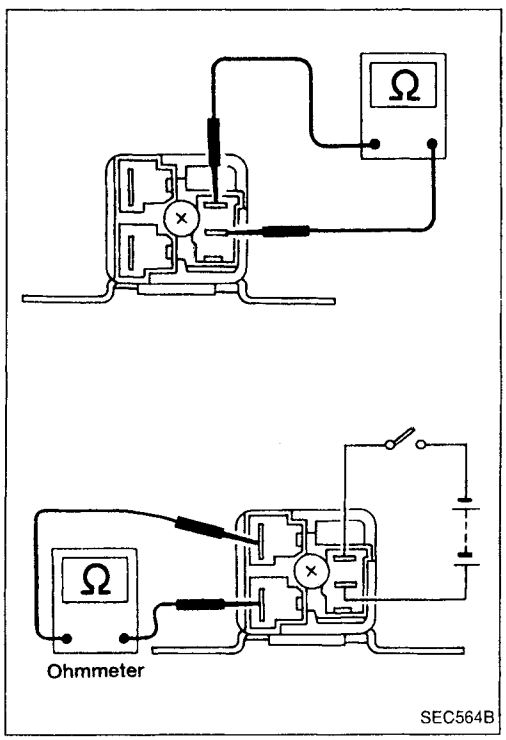

COMPONENT INSPECTION

Glow relay

1. Check relay for coil continuity.
   Continuity should exist.
2. Check relay for proper operation.

Coil voltage	Continuity	Contact point
0V	No	OFF
12V	Yes	ON

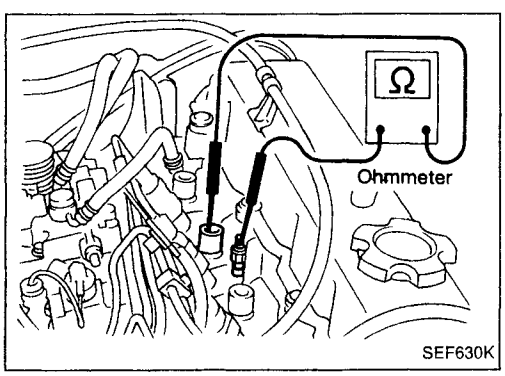

Glow plug

1. Remove glow plug connecting plate.
2. Check each glow plug for continuity.
   Continuity should exist:
   Approximately 0.65Ω

- If NG, replace glow plug.

Simpo PDF Merge and Split Unregistered Version - http://www.simpopdf.com

Quick-glow System (Cont'd)

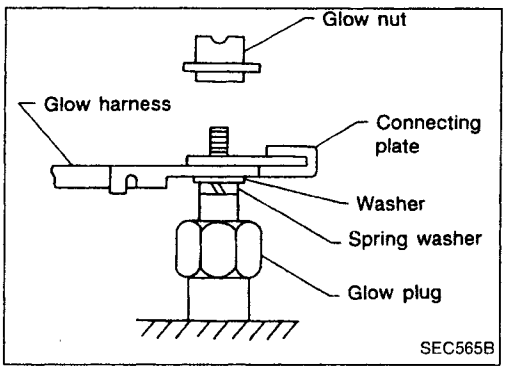

3. Install glow plug connecting plate securely.

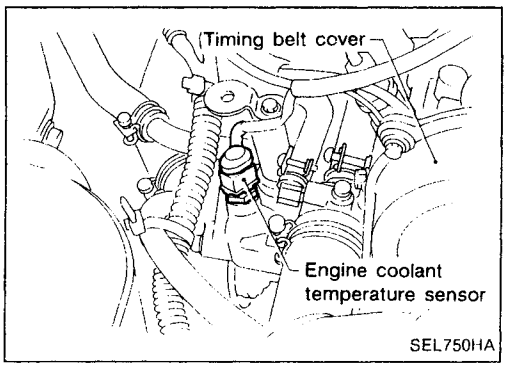

Engine coolant temperature sensor

Check engine coolant temperature sensor resistance.

Coolant temp. °C (°F)	Resistance kΩ
–15 (5)	11.5
0 (32)	5.6
10 (50)	3.7
40 (104)	1.2

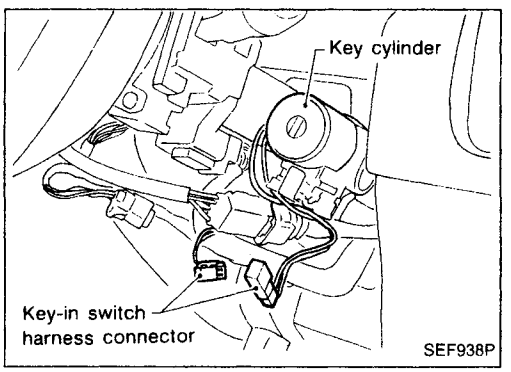

Key-in switch

Check continuity between terminals of key-in switch connector.

Ignition key	Continuity
Not inserted	No continuity
Inserted	Continuity should exist.

Alternator

Refer to "CHARGING SYSTEM" in EL section.

Simpo PDF Merge and Split Unregistered Version - http://www.simpopdf.com

Partial Load Advance (PLA) Control

SYSTEM DESCRIPTION

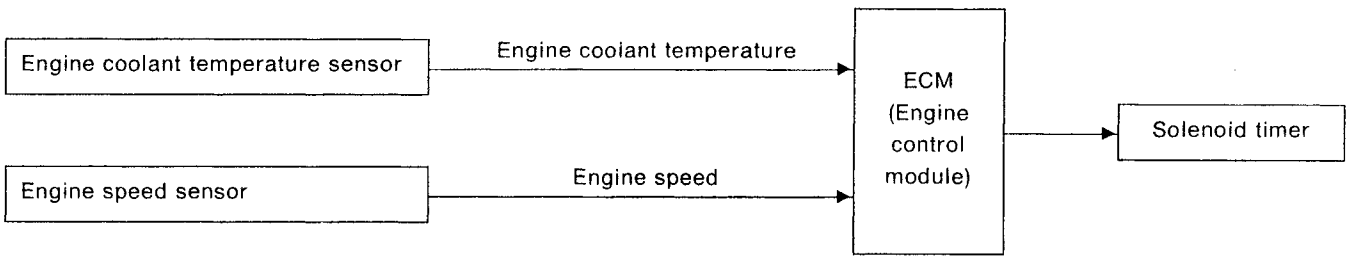

This system switches the solenoid timer on and off corresponding to the engine coolant temperature and engine speed. The solenoid timer operation advances and retards the fuel injection timing as follows:

- The injection timing advances when the timer is ON, while it retards when the timer is OFF.
- When the engine stalls or the ignition switch is in the START position, the solenoid timer is set to OFF.
- When the engine coolant temperature is lower than 10°C (50°F), the timer is set to ON.

EC

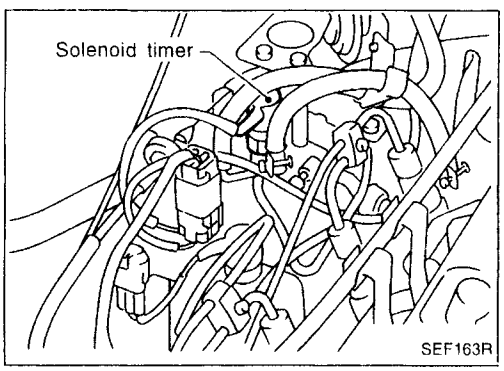

DESCRIPTION

Solenoid timer

The solenoid timer switches on and off in accordance with a signal from the ECM. This timer operation changes the pressure in the injection pump, thereby controlling the fuel injection timing.

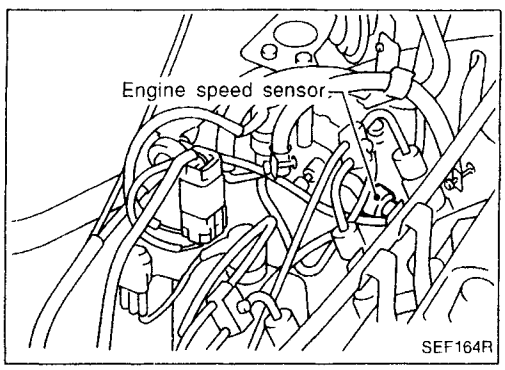

Engine speed sensor

The engine speed sensor detects engine speed by monitoring the rotation of drive shaft gear in the injection pump. The sensor sends a signal of 37 pulses per drive shaft rotation to the ECM.

Simpo PDF Merge and Split Unregistered Version - http://www.simpopdf.com

Partial Load Advance (PLA) Control (Cont'd)

LHD models

EC-PLA-01

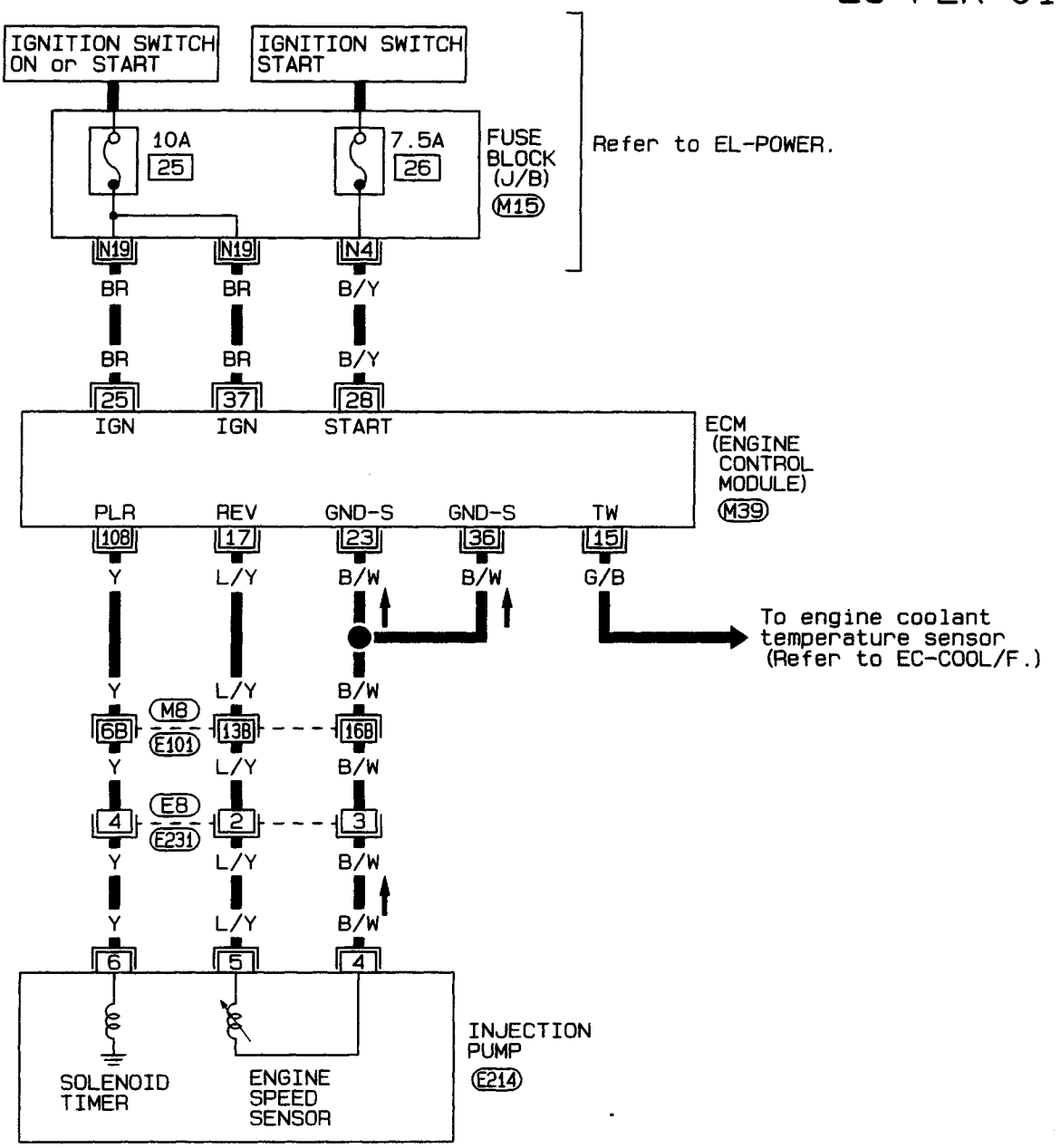



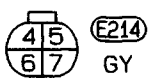

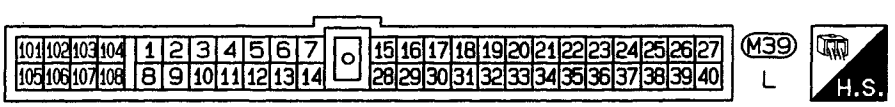

Refer to last page (Foldout page).

M8, E101

M15

HEC090

Simpo PDF Merge and Split Unregistered Version - http://www.simpopdf.com

RHD models

EC-PLA-02

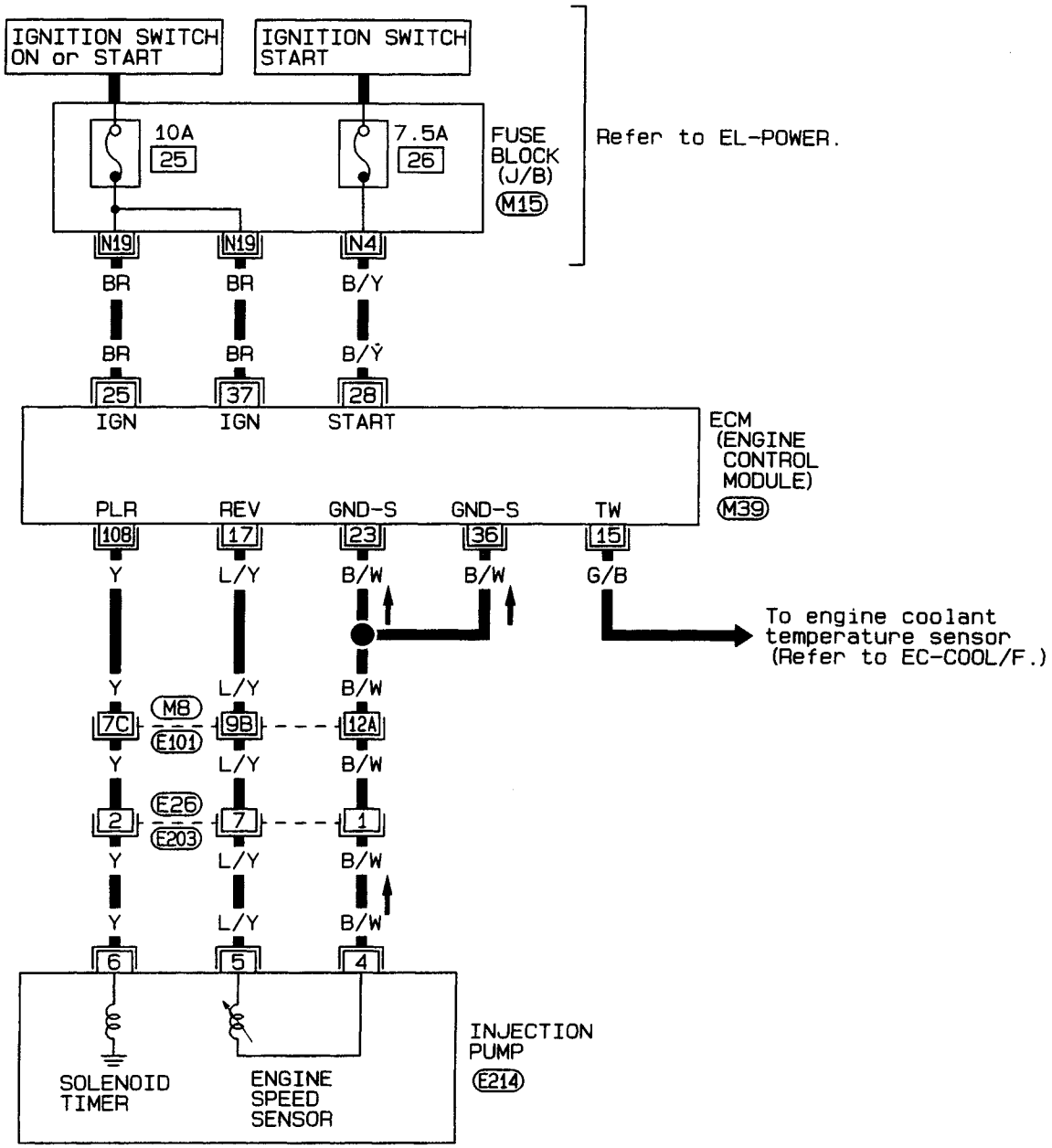

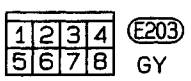

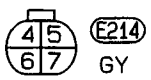

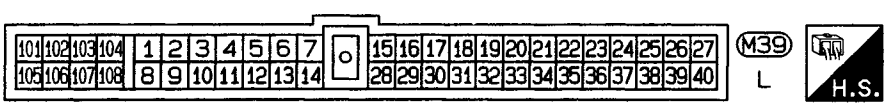

Refer to last page (Foldout page).

M8, E101

M15

HEC091

Simpo PDF Merge and Split Unregistered Version - http://www.simpopdf.com

Partial Load Advance (PLA) Control (Cont'd)

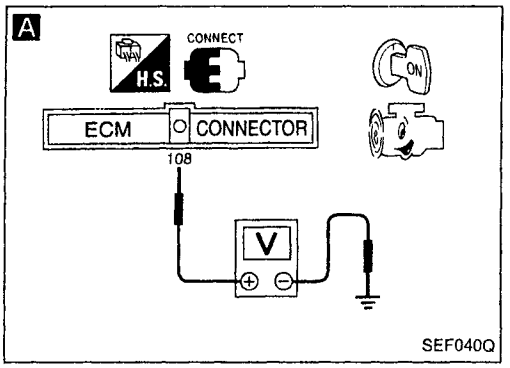

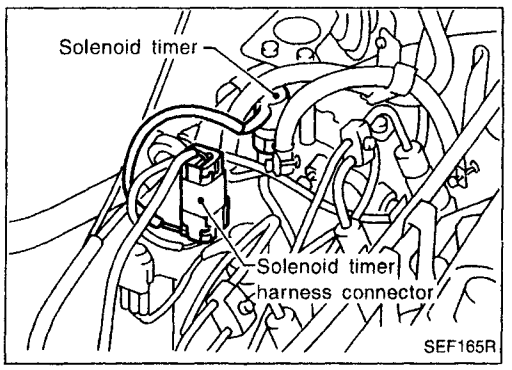

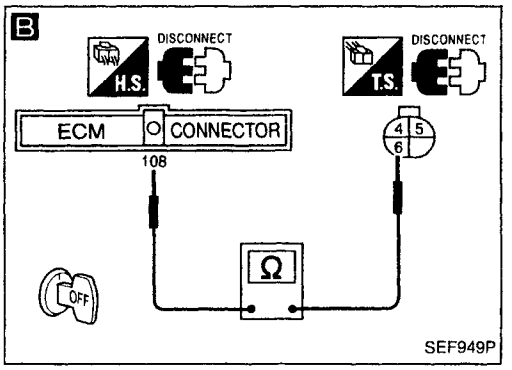

INSPECTION START

A

CHECK OVERALL FUNCTION.
1) Start engine.
2) Check voltage between ECM terminal (108) and ground.
Voltage:
Engine coolant temperature is lower than 10°C (50°F)
Battery voltage
Engine coolant temperature is higher than 60°C (140°F)
0V

OK → INSPECTION END

NG ↓

B

CHECK INPUT SIGNAL CIRCUIT.
1) Disconnect ECM harness connector.
2) Disconnect injection pump harness connector.
3) Check harness continuity between ECM terminal (108) and terminal (6).
Continuity should exist.

NG → Repair harness or connectors.

OK ↓

CHECK COMPONENT
(Solenoid timer, engine speed sensor).
Refer to "COMPONENT INSPECTION" on next page.

NG → Replace solenoid timer, engine speed sensor.

OK ↓

Disconnect and reconnect harness connectors in the circuit. Then retest.

Trouble is not fixed. ↓

Check ECM pin terminals for damage or the connection of ECM harness connector. Reconnect ECM harness connector and retest.

Simpo PDF Merge and Split Unregistered Version - http://www.simpopdf.com

Partial Load Advance (PLA) Control (Cont'd)

COMPONENT INSPECTION

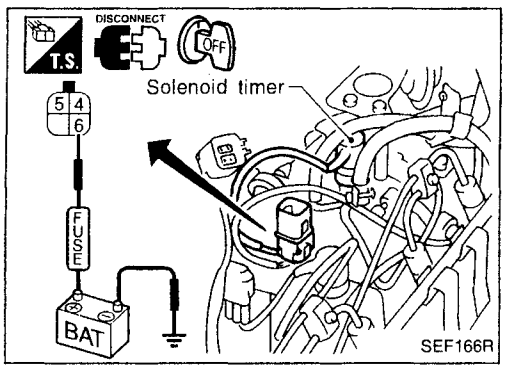

Solenoid timer

1. Disconnect solenoid timer harness connector.
2. Apply battery voltage to solenoid timer terminals and listen for operating sound.

Condition	Operating sound
With battery voltage applied	Yes
Without battery voltage applied	No

If NG, replace power steering oil pressure switch.

EC

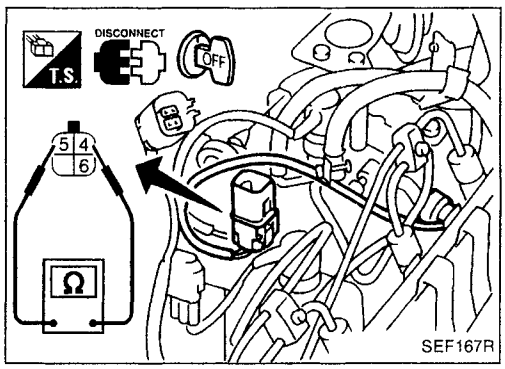

Engine speed sensor

1. Disconnect engine speed sensor harness connector.
2. Check resistance between terminals ④ and ⑤.
   Resistance: Approximately 1.6Ω

   If NG, replace fuel pump.

Simpo PDF Merge and Split Unregistered Version - http://www.simpopdf.com

Cooling Fan Control

SYSTEM DESCRIPTION

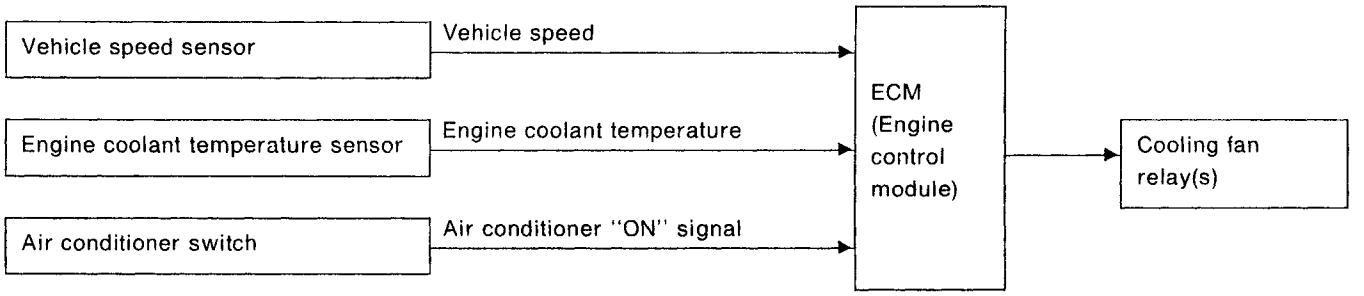

The ECM controls the cooling fan corresponding to the vehicle speed, engine coolant temperature, air conditioner system pressure and air conditioner ON signal. The control system has 3-step control [HIGH/LOW/OFF].

Operation

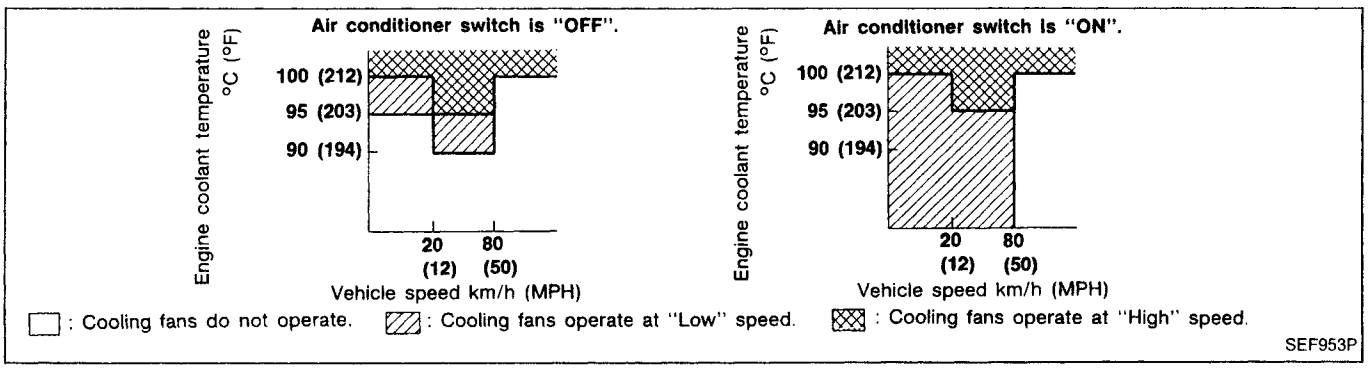

Simpo PDF Merge and Split Unregistered Version - http://www.simpopdf.com

Cooling Fan Control (Cont'd)

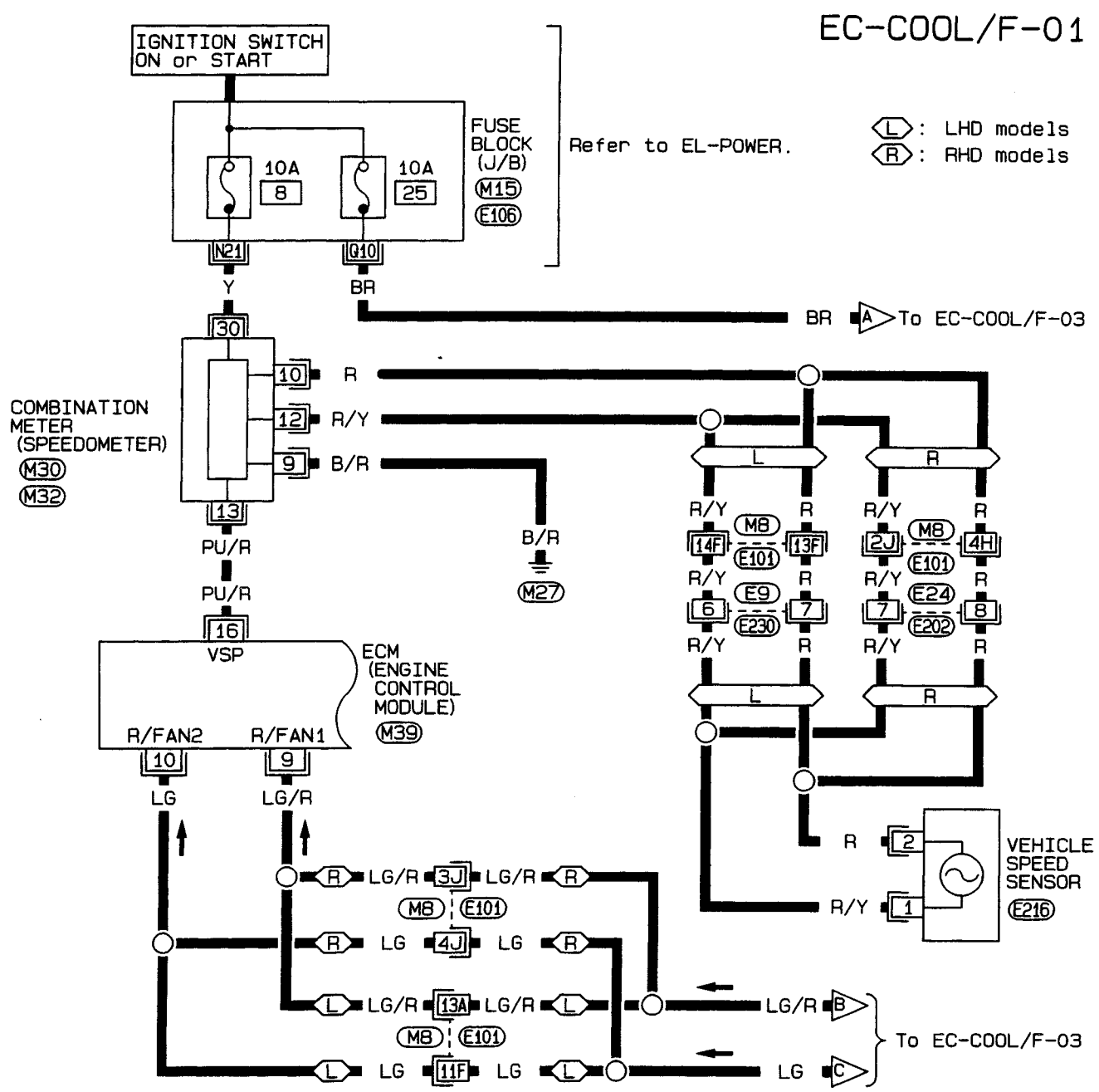

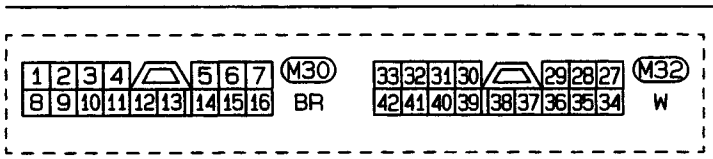

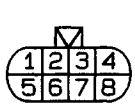

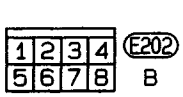

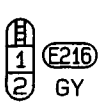

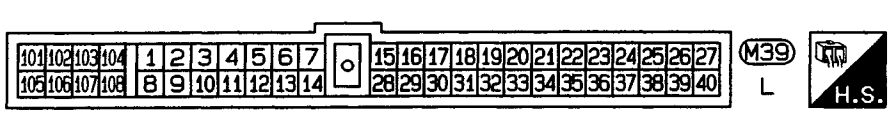

Refer to last page (Foldout page).

M8, E101
M15, E106

HEC092

Simpo PDF Merge and Split Unregistered Version - http://www.simpopdf.com

Cooling Fan Control (Cont'd)

EC-COOL/F-02

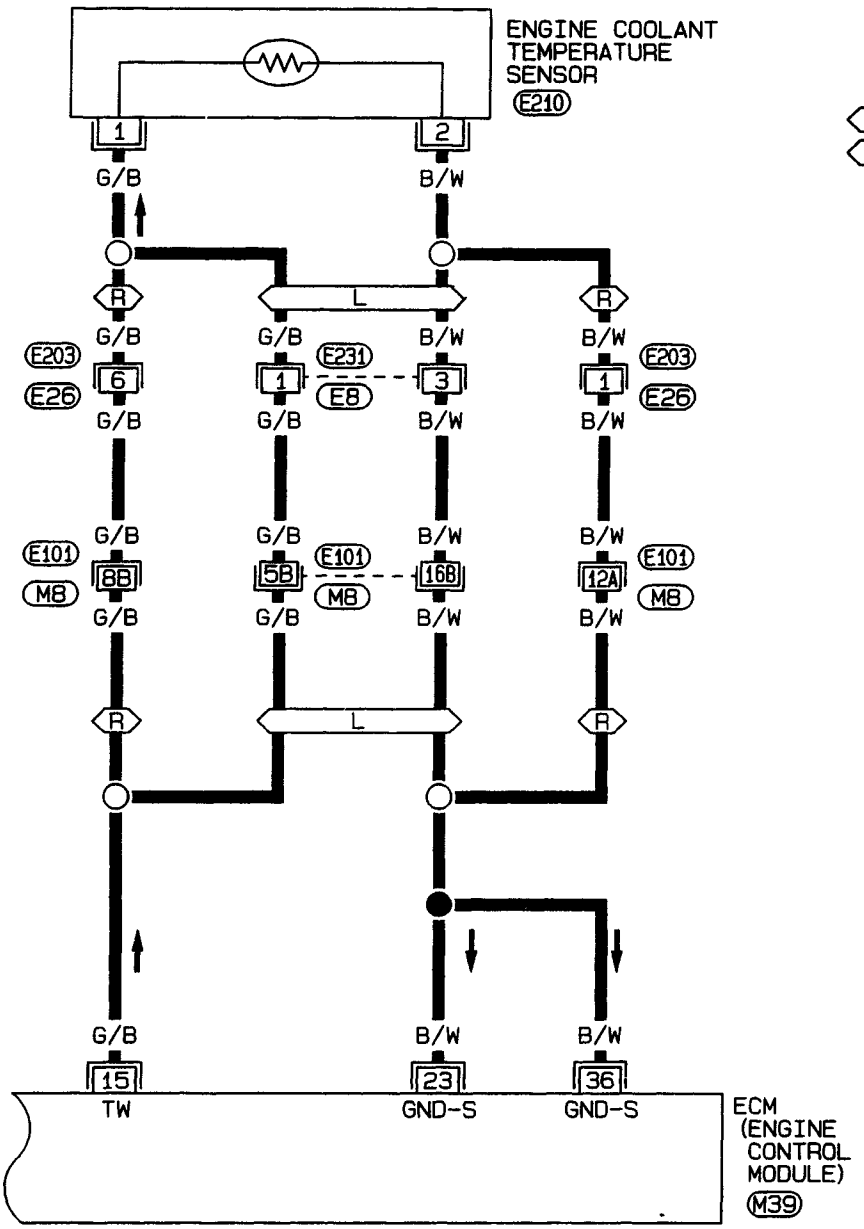

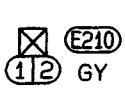

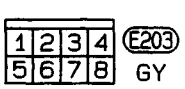

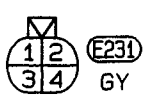

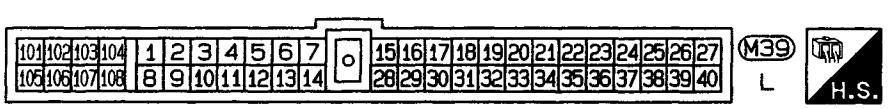

Refer to last page (Foldout page).

M8, E101

HEC093

Simpo PDF Merge and Split Unregistered Version - http://www.simpopdf.com

Cooling Fan Control (Cont'd)

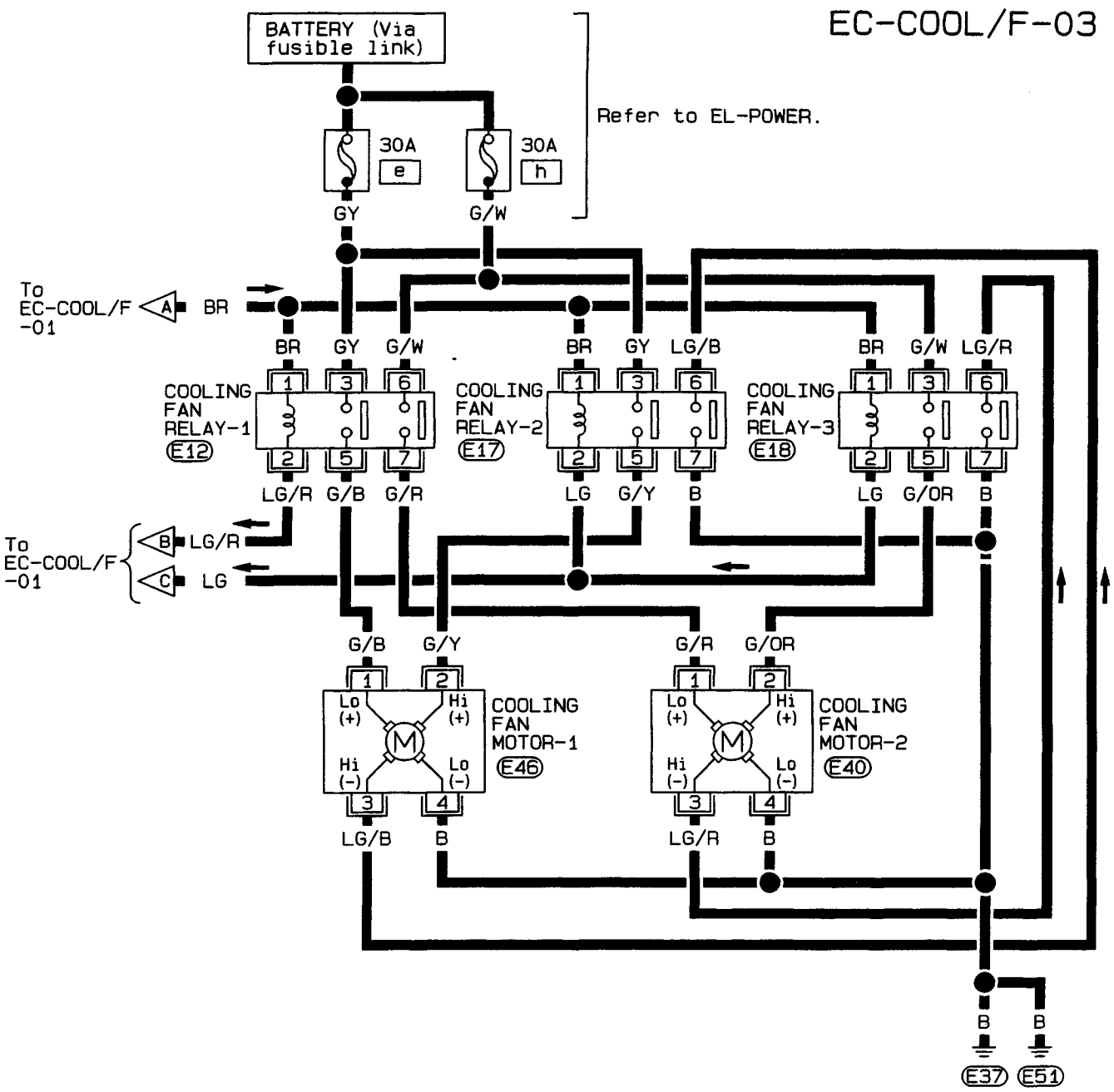

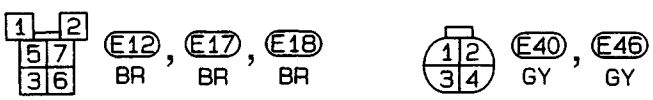

Simpo PDF Merge and Split Unregistered Version - http://www.simpopdf.com

Cooling Fan Control (Cont'd)

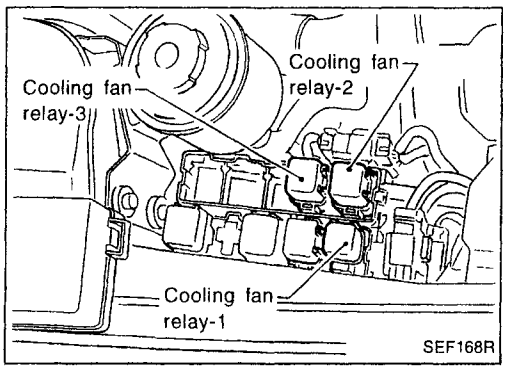

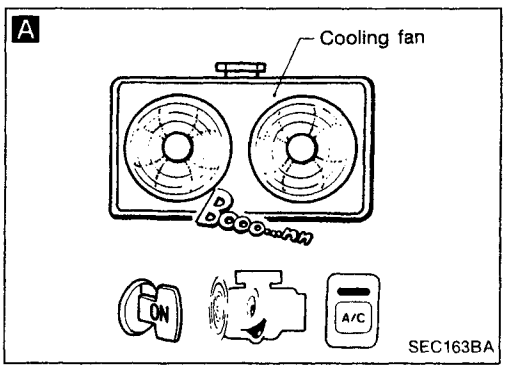

INSPECTION START

A

CHECK COOLING FAN LOW SPEED OPERATION.
1) Turn ignition switch "OFF".
2) Disconnect engine coolant temperature sensor connector.
3) Disconnect cooling fan relays 1, 2 and 3.
4) Turn ignition switch "ON".
5) Reconnect cooling fan relay 1.
6) Make sure that cooling fan operates at low speed.

NG → Check cooling fan low speed control circuit. (Go to PROCEDURE C.)

OK

B

CHECK COOLING FAN HIGH SPEED OPERATION.
1) Turn ignition switch "OFF".
2) Reconnect cooling fan relay-2 and cooling fan relay-3.
3) Turn ignition switch "ON".
4) Make sure that cooling fan operates at high speed.

NG → Check cooling fan high speed control circuit. (Go to PROCEDURE D.)

OK

INSPECTION END

Simpo PDF Merge and Split Unregistered Version - http://www.simpopdf.com

Cooling Fan Control (Cont'd)

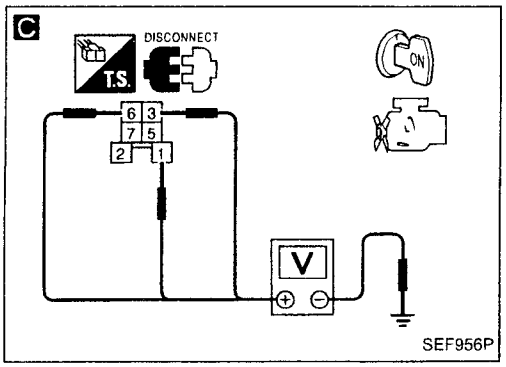

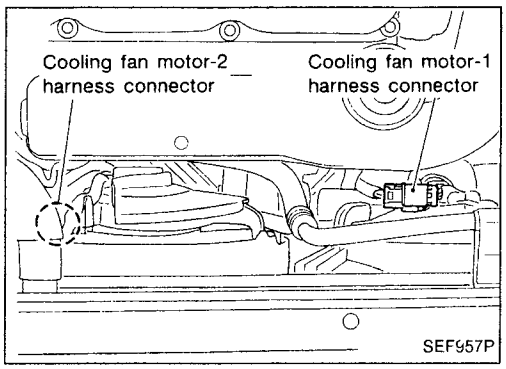

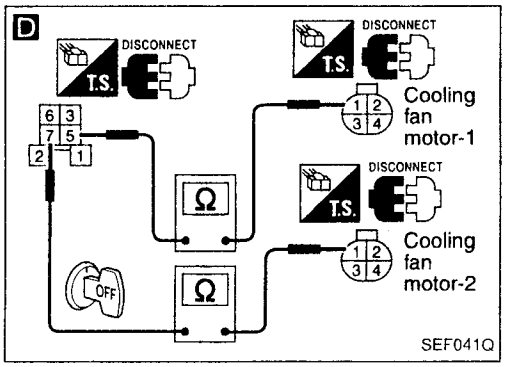

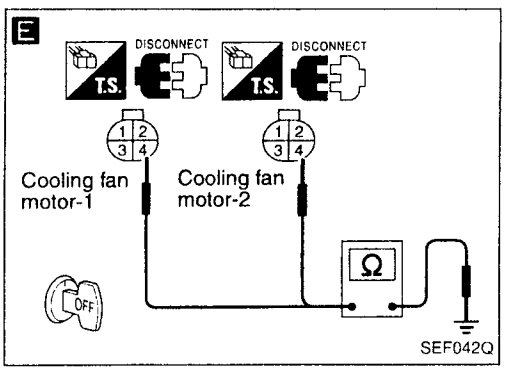

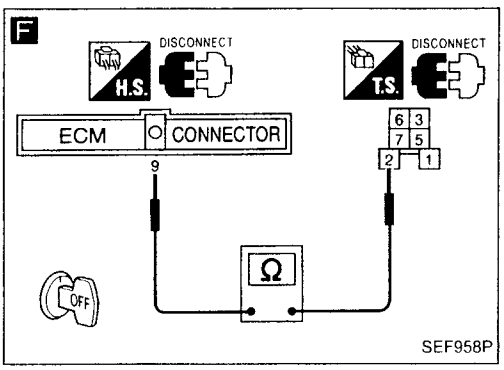

PROCEDURE C

INSPECTION START

C

CHECK POWER SUPPLY.
1) Turn ignition switch "OFF".
2) Disconnect cooling fan relay-1.
3) Turn ignition switch "ON".
4) Check voltage between terminals ①, ③, ⑥ and ground.
Voltage: Battery voltage

NG → Check the following.
- Harness connector (E106)
- 10A fuse
- 30A fusible links
- 75A fusible link
- Harness continuity between cooling fan relay-1 and fuse
- Harness continuity between cooling fan relay-1 and battery

If NG, repair harness or connectors.

OK ↓

CHECK GROUND CIRCUIT.
1) Turn ignition switch "OFF".
2) Disconnect cooling fan motor-1 harness connector and cooling fan motor-2 harness connector.
D 3) Check harness continuity between terminal ⑦ and terminal ① , terminal ⑤ and terminal ① .
Continuity should exist.
E 4) Check harness continuity between terminal ④ and body ground.
Continuity should exist.

NG → Repair harness or connectors.

OK ↓

F

CHECK OUTPUT SIGNAL CIRCUIT.
1) Disconnect ECM harness connector.
2) Check harness continuity between ECM terminal ⑨ and terminal ② .
Continuity should exist.

NG → Check the following.
- Harness connectors (E101), (M8)
- Harness continuity between cooling fan relay-1 and ECM

If NG, repair harness or connectors.

OK ↓

CHECK COMPONENT
(Cooling fan relay-1).
Refer to "COMPONENT INSPECTION".
(See page EC-412.)

NG → Replace cooling fan relay.

OK ↓

Ⓐ

EC

Simpo PDF Merge and Split Unregistered Version - http://www.simpopdf.com

Cooling Fan Control (Cont'd)

Ⓐ

CHECK COMPONENT
(Cooling fan motors).
Refer to "COMPONENT INSPECTION".
(See page EC-412.)

NG → Replace cooling fan motors.

OK

Disconnect and reconnect harness connectors in the circuit. Then retest.

Trouble is not fixed.

Check ECM pin terminals for damage or the connection of ECM harness connector. Reconnect ECM harness connector and retest.

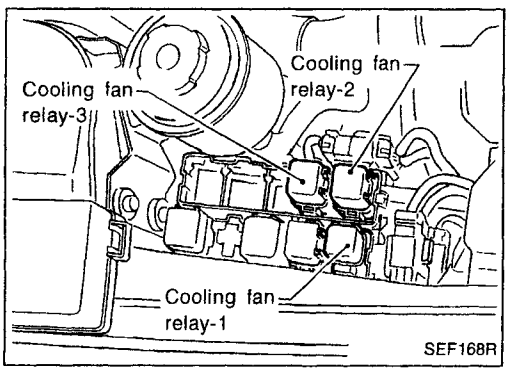

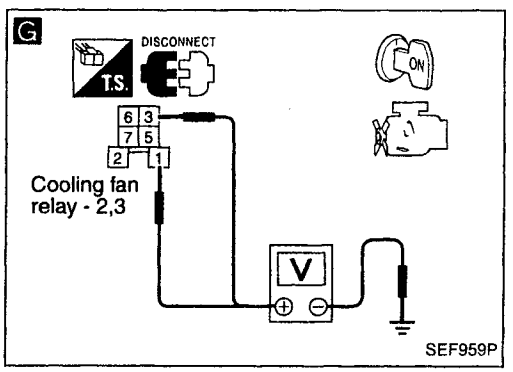

PROCEDURE D

INSPECTION START

G

CHECK POWER SUPPLY.
1) Turn ignition switch "OFF".
2) Disconnect cooling fan relay-2 and cooling fan relay-3.
3) Turn ignition switch "ON".
4) Check voltage between cooling fan relay-2, 3 terminals ①, ③ and ground.
Voltage: Battery voltage

NG → Check the following.
- Harness connectors (E106)
- 10A fuse
- 30A fusible links
- 75A fusible link
- Harness continuity between cooling fan relay-2, 3 and fuse
- Harness continuity between cooling fan relay-2, 3 and battery

If NG, repair harness or connectors.

OK

Ⓑ

Simpo PDF Merge and Split Unregistered Version - http://www.simpopdf.com

Cooling Fan Control (Cont'd)

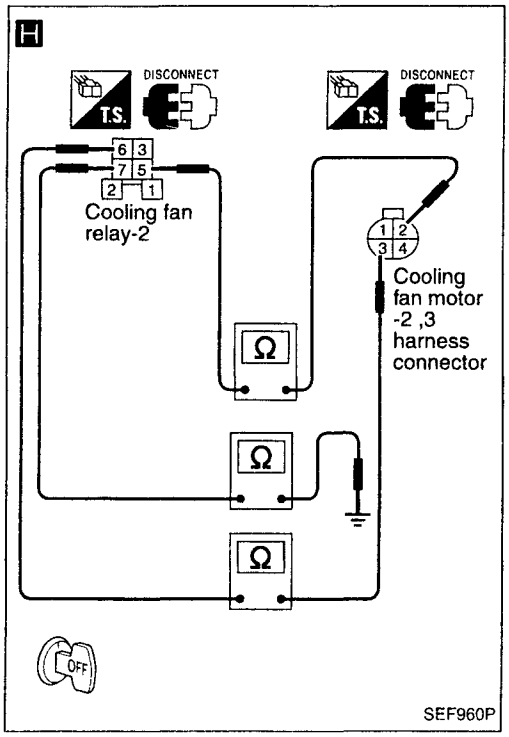

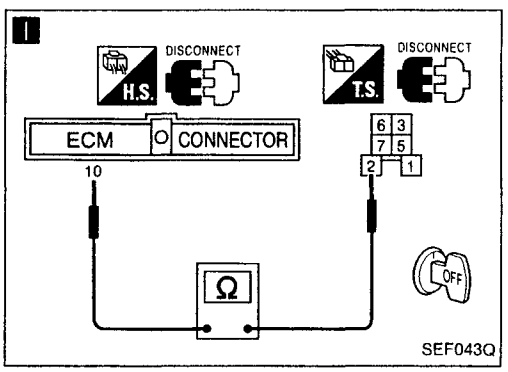

Ⓑ

CHECK GROUND CIRCUIT.
1) Turn ignition switch "OFF".
2) Disconnect cooling fan motor-1 harness connector and cooling fan motor-2, 3 harness connectors.
H 3) Check harness continuity between terminal ⑤ and terminal ②, terminal ⑥ and terminal ③, terminal ⑦ and body ground.
Continuity should exist.

NG → Repair harness or connectors.

OK ↓

I

CHECK OUTPUT SIGNAL CIRCUIT.
1) Disconnect ECM harness connector.
2) Check harness continuity between ECM terminal ⑩ and terminal ②.
Continuity should exist.

NG → Check the following.
- Harness connectors (E101), (M8)
- Harness continuity between cooling fan relay-2, 3 and ECM

If NG, repair harness or connectors.

OK ↓

CHECK COMPONENT
(Cooling fan relay-2, 3).
Refer to "COMPONENT INSPECTION" on next page.

NG → Replace cooling fan relays.

OK ↓

CHECK COMPONENTS
(Cooling fan motors).
Refer to "COMPONENT INSPECTION" on next page.

NG → Replace cooling fan motors.

OK ↓

Disconnect and reconnect harness connectors in the circuit. Then retest.

Trouble is not fixed. ↓

Check ECM pin terminals for damage or the connection of ECM harness connector. Reconnect ECM harness connector and retest.

EC

Simpo PDF Merge and Split Unregistered Version - http://www.simpopdf.com

Cooling Fan Control (Cont'd)

COMPONENT INSPECTION

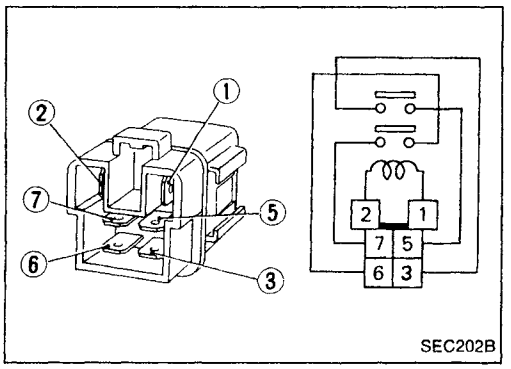

Cooling fan relays-1, -2 and -3

Check continuity between terminals ③ and ⑤, ⑥ and ⑦.

Conditions	Continuity
12V direct current supply between terminals ① and ②	Yes
No current supply	No

If NG, replace relay.

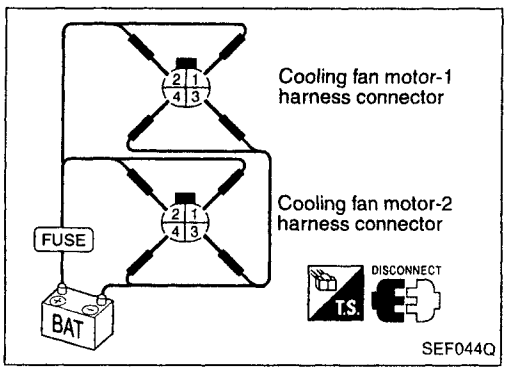

Cooling fan motors-1 and -2

1. Disconnect cooling fan motor harness connectors.
2. Supply cooling fan motor terminals with battery voltage and check operation.

	Speed	Terminals	
		(⊕)	(⊖)
Cooling fan motor-1	Low	①	④
	High	②, ①	④, ③
Cooling fan motor-2	Low	①	④
	High	②, ①	④, ③

Cooling fan motor should operate.
If NG, replace cooling fan motor.

Simpo PDF Merge and Split Unregistered Version - http://www.simpopdf.com

Air Conditioner Cut Control

SYSTEM DESCRIPTION

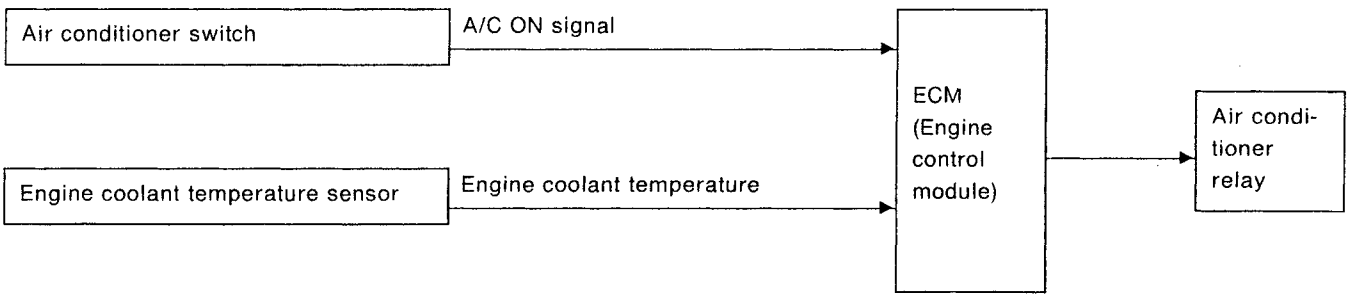

EC

The air conditioner is turned off under the following conditions:
RHD models
- Engine coolant temperature is higher than 97°C (207°F)

LHD models
- Engine coolant temperature is higher than 105°C (221°F)

For trouble diagnoses, refer to "TROUBLE DIAGNOSES" in HA section.

Simpo PDF Merge and Split Unregistered Version - http://www.simpopdf.com

Air Conditioner Cut Control (Cont'd)

LHD models

EC-A/CCUT-01

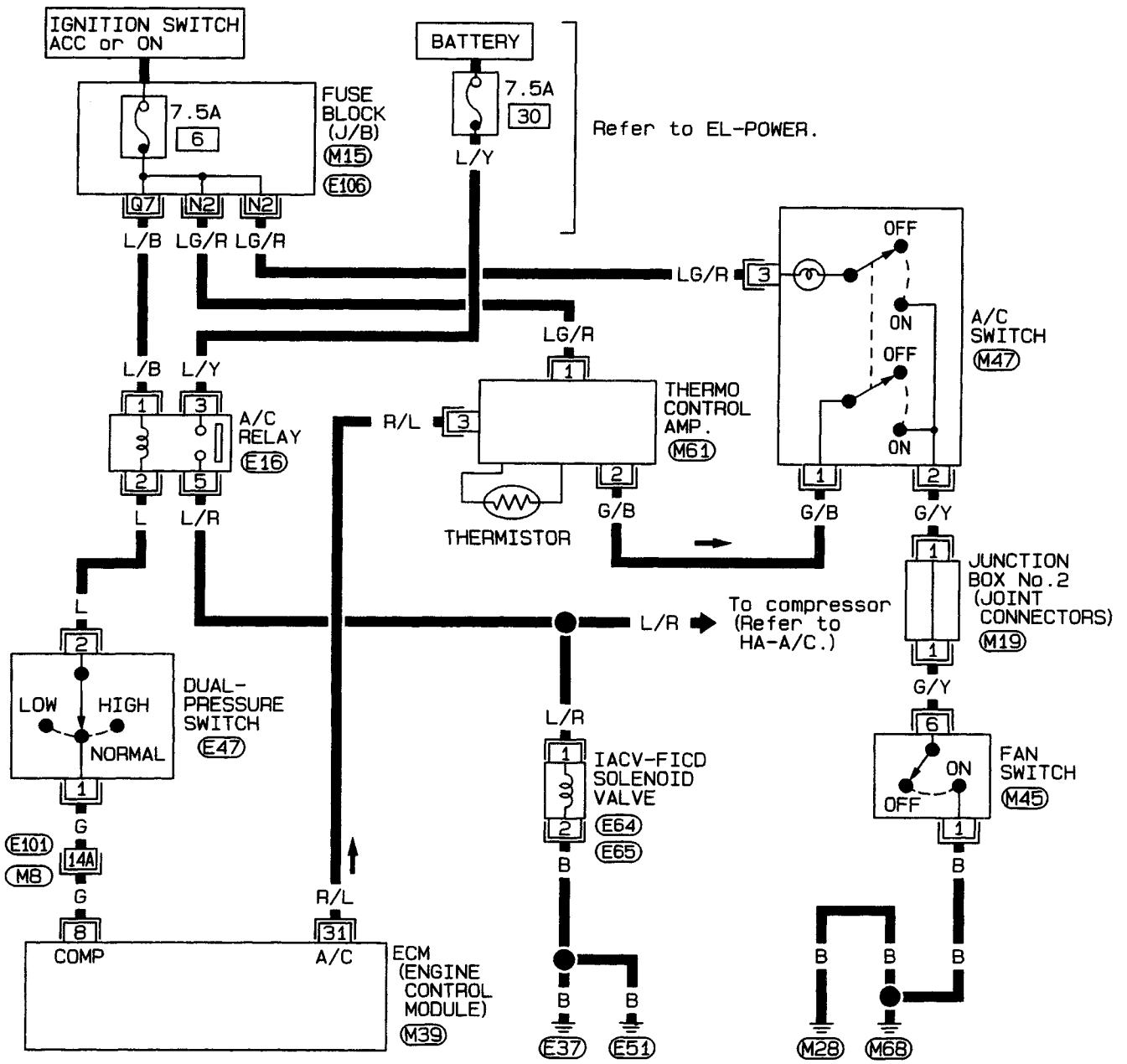

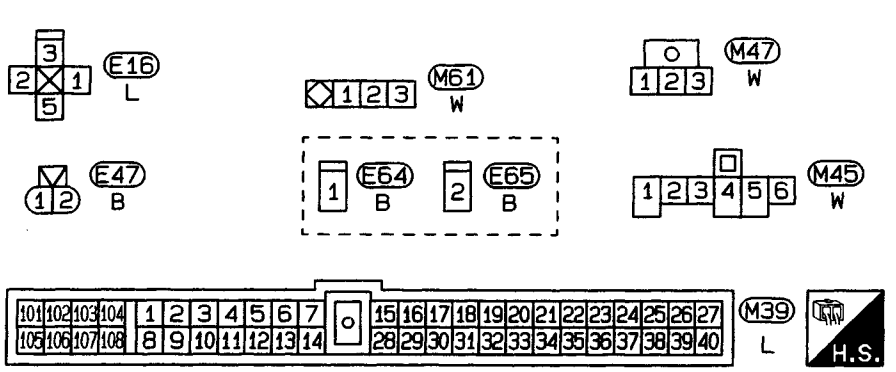

Refer to last page (Foldout page).

M8, E101
M15, E106
M19

HEC095

Simpo PDF Merge and Split Unregistered Version - http://www.simpopdf.com

Air Conditioner Cut Control (Cont'd)

RHD models

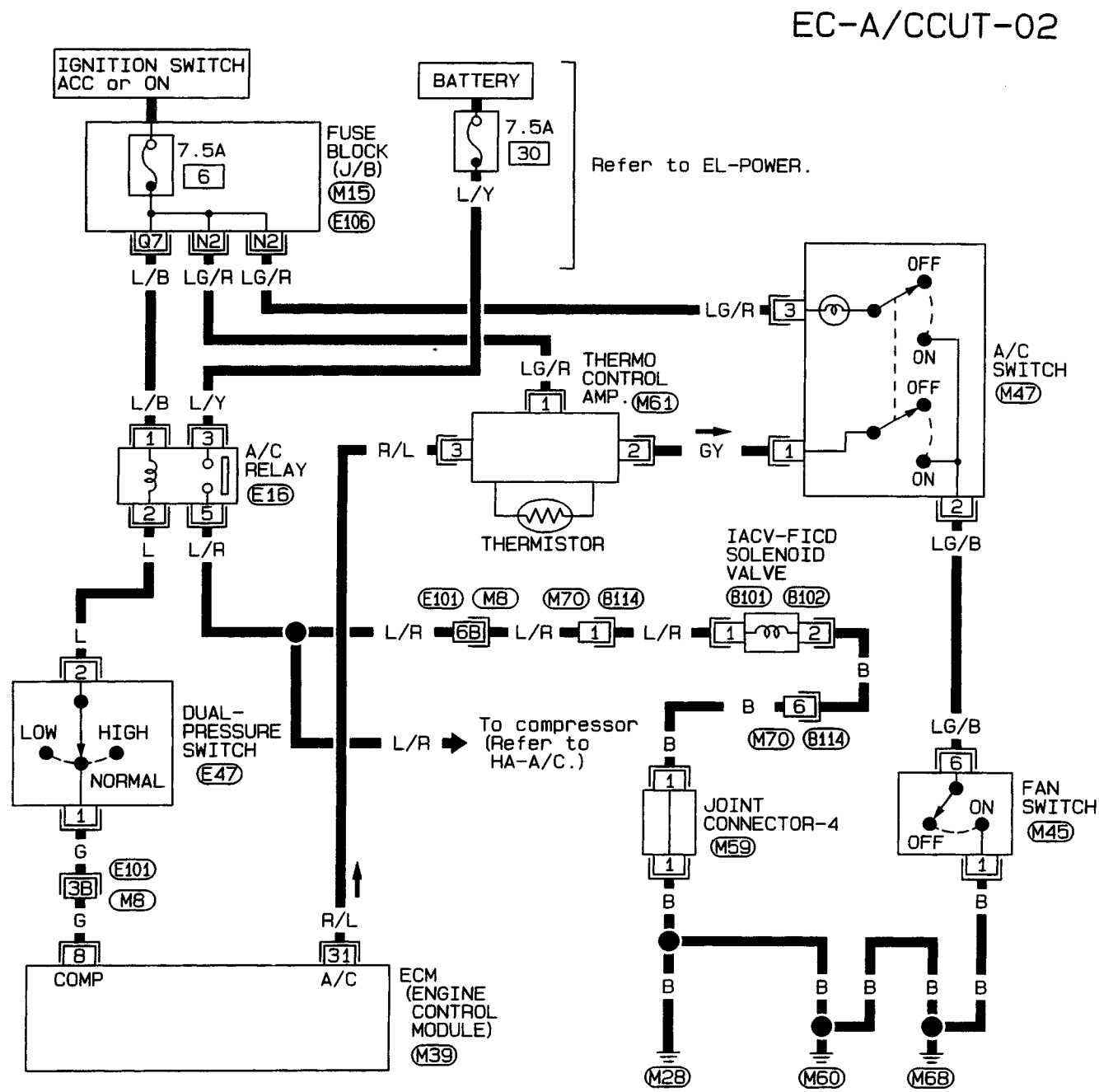

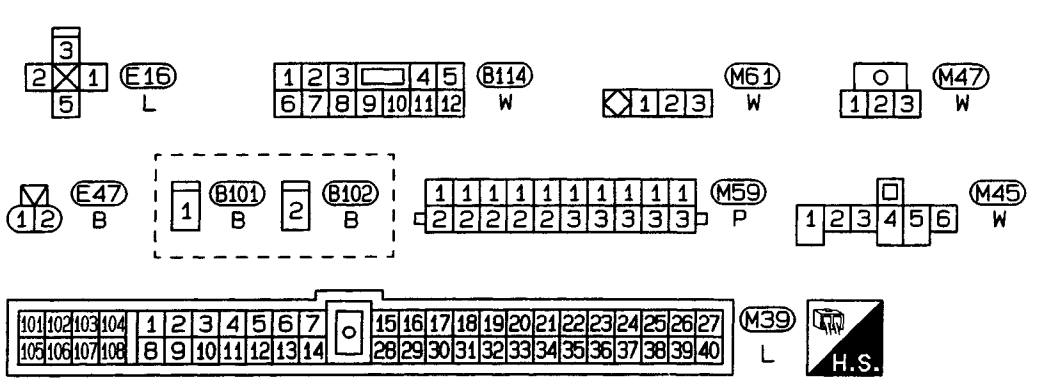

Refer to last page (Foldout page).

M8, E101
M15, E106

Simpo PDF Merge and Split Unregistered Version - http://www.simpopdf.com

Fuel Cut Control

EC-FCUT-01

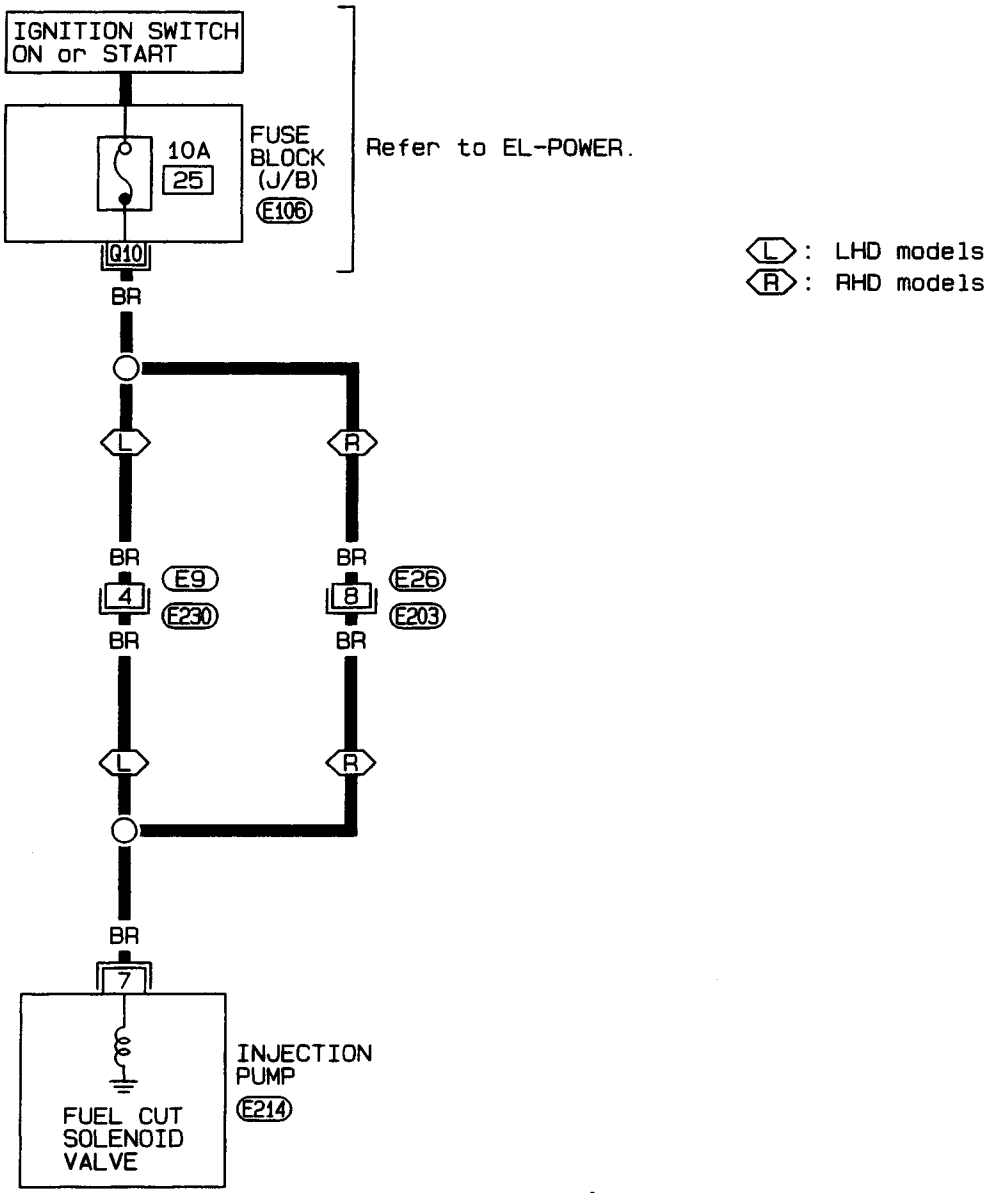

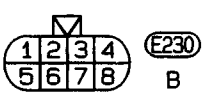

E230
B

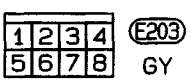

E203
GY



E214
GY

Refer to last page
(Foldout page).

E106

HEC097

Simpo PDF Merge and Split Unregistered Version - http://www.simpopdf.com

General Specifications

PRESSURE REGULATOR Regulated pressure kPa (bar, kg/cm^2, psi)	299 (2.99, 3.05, 43.4)

Inspection and Adjustment

Idle speed*1 rpm	
No-load*2	GA14DE, GA16DE for Europe and Israel A/T: 800 ± 50 Models with daytime light system M/T: 800 ± 50 Models without daytime light system M/T: 700 ± 50 GA15DE M/T: 630 ± 50 A/T: 750 ± 50 GA16DE for Australia M/T: 675 ± 50 A/T: 800 ± 50 GA16DE except for Europe and Israel, and Australia M/T: 650 ± 50 A/T: 800 ± 50
Air conditioner: ON	900 or more
Ignition timing	GA14DE, GA16DE for Europe and Israel and GA16DE except for Australia 10° ± 2° BTDC GA15DE 6° ± 2° BTDC GA16DE for Australia 8° ± 2° BTDC
Throttle position sensor idle position*3 V	0.40 - 0.60

*1: Feedback controlled and needs no adjustments
*2: Under the following conditions:
- Air conditioner switch: OFF
- Electric load: OFF (Lights, heater, fan & rear defogger)
- A/T models: in "N" position

*3: Engine is warmed up sufficiently.

IGNITION COIL

Primary voltage	V	12
Primary resistance [at 20°C (68°F)]	Ω	Approximately 0.5 - 1.0
Secondary resistance [at 20°C (68°F)]	kΩ	Approximately 12

MASS AIR FLOW SENSOR

Supply voltage	V	Battery voltage
Output voltage	V	1.2 - 1.8*

*: Engine is warmed up sufficiently and idling under no-load.

ENGINE COOLANT TEMPERATURE SENSOR

Temperature °C (°F)	Resistance kΩ
20 (68)	2.1 - 2.9
90 (194)	0.24 - 0.26
110 (230)	0.14 - 0.15

FUEL PUMP

Resistance [at 25°C (77°F)]	Ω	Approximately 0.2 - 5

IACV-AAC VALVE

Resistance [at 25°C (77°F)]	Ω	Approximately 10 (For Europe and Israel) 50 - 100 (Except for Europe and Israel)

INJECTOR

Resistance [at 25°C (77°F)]	Ω	Approximately 10 - 14

RESISTOR

Resistance [at 25°C (77°F)]	kΩ	Approximately 2.2

THROTTLE POSITION SENSOR

Accelerator pedal conditions	Resistance kΩ [at 25°C (77°F)]
Completely released	Approximately 0.5*
Partially released	0.5 - 4
Completely depressed	Approximately 4

*: Engine is warmed up sufficiently.

EC

Simpo PDF Merge and Split Unregistered Version - http://www.simpopdf.com

General Specifications

PRESSURE REGULATOR Fuel pressure at idling kPa (bar, kg/cm^2, psi)	
Vacuum hose is connected	Approximately 235 (2.35, 2.4, 34)
Vacuum hose is disconnected	Approximately 294 (2.94, 3.0, 43)

Inspection and Adjustment

Idle speed*1 rpm No-load*2 (in "N" position)	800 ± 50
Air conditioner: ON (in "N" position)	850 or more
Ignition timing	15° ± 2° BTDC
Throttle position sensor idle position V	0.35 - 0.65

*1: Feedback controlled and needs no adjustments
*2: Under the following conditions:
- Air conditioner switch: OFF
- Electric load: OFF (Lights, heater fan & rear defogger)

IGNITION COIL

Primary voltage	V	12
Primary resistance [at 25°C (77°F)]	Ω	0.5 - 1.0
Secondary resistance [at 25°C (77°F)]	kΩ	Approximately 25

MASS AIR FLOW SENSOR

Supply voltage	V	Battery voltage (11 - 14)
Output voltage	V	1.3 - 1.7*

*: Engine is warmed up sufficiently and idling under no-load.

ENGINE COOLANT TEMPERATURE SENSOR

Temperature °C (°F)	Resistance kΩ
20 (68)	2.1 - 2.9
50 (122)	0.68 - 1.00
90 (194)	0.236 - 0.260

HEATED OXYGEN SENSOR HEATER

Resistance [at 25°C (77°F)]	Ω	3.3 - 6.3

FUEL PUMP

Resistance [at 25°C (77°F)]	Ω	Approximately 0.2 - 5.0

IACV-AAC VALVE

Resistance [at 25°C (77°F)]	Ω	Approximately 10.0

INJECTOR

Resistance [at 25°C (77°F)]	Ω	10 - 14

RESISTOR

Resistance [at 25°C (77°F)]	kΩ	Approximately 2.2

THROTTLE POSITION SENSOR

Throttle valve conditions	Resistance kΩ [at 25°C (77°F)]
Completely closed	Approximately 1
Partially open	1 - 10
Completely open	Approximately 10

Simpo PDF Merge and Split Unregistered Version - http://www.simpopdf.com

VE-type Injection Pump

GENERAL SPECIFICATIONS

Unit : rpm

Engine		CD20
Idle speed	FICD: OFF	700^{+50}_{-0}
	FICD: ON	800
Dash pot touch speed		1,300
Maximum engine speed		5,400

Pump numbers

Engine	Part number	Pump assembly number
CD20	16700-75J01	104740-2610

Pump data is not yet available.
(Pump data will be given by Technical Bulletin, or refer to CALIBRATION STANDARD published by ZEXEL.)

EC

INSPECTION AND ADJUSTMENT

Installation of injection pump

Engine		CD20
Plunger lift (Injection timing)	mm (in)	0.79 - 0.85 (0.0311 - 0.0335) (equivalent to 8° BTDC)

Injection Nozzle

INSPECTION AND ADJUSTMENT

Injection nozzle assembly

Unit: kPa (bar, kg/cm^2, psi)

Initial injection pressure	
New	12,749 - 13,534 (127.5 - 135.3, 130 - 138, 1,849 - 1,962)
Used	12,259 - 13,239 (122.6 - 132.4, 125 - 135, 1,778 - 1,920)

Adjusting shims

Thickness mm (in)	Parts No.
0.50 (0.0197)	16613-V0700
0.54 (0.0213)	16613-V0702
0.58 (0.0228)	16613-V0704
0.62 (0.0244)	16613-V0706
0.66 (0.0260)	16613-V0708
0.70 (0.0276)	16613-V0710
0.74 (0.0291)	16613-V0712
0.78 (0.0307)	16613-V0714
0.82 (0.0323)	16613-V0716
0.86 (0.0339)	16613-V0718
0.90 (0.0354)	16613-V0720
0.94 (0.0370)	16613-V0722
0.98 (0.0386)	16613-V0724
1.00 (0.0394)	16613-V0760

Simpo PDF Merge and Split Unregistered Version - http://www.simpopdf.com

ELECTRICAL SYSTEM

SECTION EL

When you read wiring diagrams:
● Read GI section, "HOW TO READ WIRING DIAGRAMS".
When you perform trouble diagnoses, read GI section, "HOW TO FOLLOW FLOW CHART IN TROUBLE DIAGNOSES" and "HOW TO PERFORM EFFICIENT DIAGNOSIS FOR AN ELECTRICAL INCIDENT".

CONTENTS

PRECAUTIONS 4
Supplemental Restraint System (SRS) "AIR BAG" (Dual Air Bag System) 4
Supplemental Restraint System (SRS) "AIR BAG" (Single Air Bag System) 4
HARNESS CONNECTOR 5
Description 5
STANDARDIZED RELAY 6
Description 6
POWER SUPPLY ROUTING 8
Schematic 8
Wiring Diagram — POWER — 10
Fuse 19
Fusible Link 19
Circuit Breaker 19
GROUND DISTRIBUTION 20
BATTERY 25
How to Handle Battery 25
Battery Test and Charging Chart 28
Service Data and Specifications (SDS) 32
STARTING SYSTEM 33
Wiring Diagram — START — 33
Trouble Diagnoses 35
Construction 36
Removal and Installation 45
Magnetic Switch Check 46
Pinion/Clutch Check 46
Brush Check 46
Yoke Check 47
Armature Check 48
Assembly 49
Service Data and Specifications (SDS) 50
CHARGING SYSTEM 52
Wiring Diagram — CHARGE — 52
Trouble Diagnoses 54
Construction 55
Removal and Installation 57
Disassembly 57
Rotor Check 57
Brush Check 58
Stator Check 58
Diode Check 59
Assembly 60
Service Data and Specifications (SDS) 61
COMBINATION SWITCH 62
Combination Switch/Check 62
Replacement 64
HEADLAMP — Without Daytime Light System — 65
Wiring Diagram — H/LAMP — 65
Trouble Diagnoses 67
HEADLAMP — Daytime Light System — 68
Operation (Daytime light system) 68
System Description 69
Schematic 70
Wiring Diagram — DTRL — 71
Trouble Diagnoses (Daytime Light) 74
HEADLAMP 75
Bulb Replacement 75
Aiming Adjustment 75
HEADLAMP — Headlamp Aiming Control — 77
Wiring Diagram — AIM — 77
Description 81
EXTERIOR LAMP 82
Clearance, License and Tail Lamps/Schematic 82
Clearance, License and Tail Lamps/Wiring Diagram — TAIL/L — 83
Stop Lamp/Wiring Diagram — STOP/L — 92
Back-up Lamp/Wiring Diagram — BACK/L — 94
Front Fog Lamp/Wiring Diagram — F/FOG — 96
Front Fog Lamp Bulb Replacement 101

Simpo PDF Merge and Split Unregistered Version - http://www.simpopdf.com

CONTENTS (Cont'd.)

Front Fog Lamp Aiming Adjustment 101
Rear Fog Lamp/Wiring Diagram — R/FOG — 102
Turn Signal and Hazard Warning Lamps/ Schematic 106
Turn Signal and Hazard Warning Lamps/Wiring Diagram — TURN — 107
Turn Signal and Hazard Warning Lamps/Trouble Diagnoses 113
Combination Flasher Unit Check 113
Bulb Specifications 114
INTERIOR LAMP 115
Illumination/Schematic 115
Illumination/Wiring Diagram — ILL — 116
Interior, Spot, Trunk Room and Luggage Room Lamps/Wiring Diagram — INT/L — 122
Bulb Specifications 126
METER AND GAUGES 127
Combination Meter 127
Speedometer, Tachometer, Temp. and Fuel Gauges/Wiring Diagram — METER — 129
Inspection/Fuel Gauge and Water Temperature Gauge 133
Inspection/Tachometer 134
Inspection/Speedometer and Vehicle Speed Sensor 135
Fuel Tank Gauge Unit Check 137
Thermal Transmitter Check 137
Vehicle Speed Sensor Signal Check 137
WARNING LAMPS AND BUZZER 138
Warning Lamps/Schematic 138
Warning Lamps/Wiring Diagram — WARN — 139
Oil Pressure Switch Check 151
Fuel Warning Lamp Sensor Check 151
Diode Check 151
Warning Buzzer Unit 151
Warning Buzzer/System Description 152
Warning Buzzer/Wiring Diagram — BUZZER — 154
Components Inspection — Warning Buzzer 157
WIPER AND WASHER 160
Front Wiper and Washer/System Description 160
Front Wiper and Washer/Wiring Diagram — WIPER — 162
Front Wiper Amplifier Check 166
Front Wiper Installation and Adjustment 166
Front Wiper Linkage 167
Front Washer Nozzle Adjustment 168
Front Washer Tube Layout 168
Rear Wiper and Washer/System Description 169
Rear Wiper and Washer/Wiring Diagram — WIP/R — 171
Rear Wiper Amplifier Check 175
Rear Wiper Installation and Adjustment 175
Rear Washer Nozzle Adjustment 175
Rear Washer Tube Layout 176
Check Valve (for rear washer) 176
Headlamp Wiper and Washer/Wiring Diagram — HLC — 177
Headlamp Wiper Motor Check 179
Headlamp Wiper Installation 179
Headlamp Washer Tube Layout 179
Check Valve (For headlamp washer) 179
POWER WINDOW 180
System Description 180
Schematic 183
Wiring Diagram — WINDOW — 185
Trouble Diagnoses 197
POWER DOOR LOCK 198
System Description 198
Schematic 200
Wiring Diagram — D/LOCK — 202
Trouble Diagnoses — Type 1 (For Europe and Australia) 212
Trouble Diagnoses — Type 2 (Except for Europe and Australia) 216
POWER DOOR MIRROR 220
Wiring Diagram — MIRROR — 220
ELECTRIC SUN ROOF 224
Wiring Diagram — SROOF — 224
HORN, CIGARETTE LIGHTER AND CLOCK 226
Wiring Diagram — HORN — 226
REAR WINDOW DEFOGGER AND DOOR MIRROR DEFOGGER 230
System Description (For models with daytime light system) 230
Wiring Diagram — DEF — 231
Filament Check 235
Filament Repair 236
AUDIO AND ANTENNA 237
Audio/System Description 237
Wiring Diagram — AUDIO — 238
Radio Fuse Check 243
Location of Antenna 243
Antenna Rod Replacement 243
HEATED SEAT 245
Wiring Diagram — H/SEAT — 245
NATS (Nissan Anti-Theft System) 247
System Description 247
System Composition 247

Simpo PDF Merge and Split Unregistered Version - http://www.simpopdf.com

CONTENTS (Cont'd.)

Component Parts Location 248
Wiring Diagram — NATS — 249
Trouble Diagnoses 251
LOCATION OF ELECTRICAL UNITS 266
Engine Compartment 266
Passenger Compartment 267
HARNESS LAYOUT 269
How to Read Harness Layout 269
Outline 270
Engine Control Harness 271
Engine Room Harness 274
Main Harness 280
Body Harness 284
Body No. 2 Harness 292
Engine Harness 294
Air Bag Harness 297
Room Lamp Harness 298
Back Door Harness 299
Front Door Harness (LH side) 300
Front Door Harness (RH side) 302
Rear Door Harness 304
SUPER MULTIPLE JUNCTION (SMJ) ..... Foldout
Terminal Arrangement ..... Foldout
FUSE BLOCK — Junction Box (J/B) ..... Foldout
Terminal Arrangement ..... Foldout
ELECTRICAL UNITS ..... Foldout
Terminal Arrangement ..... Foldout
JOINT CONNECTOR (J/C) ..... Foldout
Terminal Arrangement ..... Foldout

WIRING DIAGRAM REFERENCE CHART

COOLING SYSTEM ..... LC SECTION
ECCS (Ignition system) ..... EC SECTION
AUTOMATIC TRANSAXLE CONTROL SYSTEM ..... AT SECTION
ANTI-LOCK BRAKE SYSTEM ..... BR SECTION
SRS "AIR BAG" ..... RS SECTION
HEATER AND AIR CONDITIONER ..... HA SECTION

Simpo PDF Merge and Split Unregistered Version - http://www.simpopdf.com

Supplemental Restraint System (SRS) "AIR BAG" (Dual Air Bag System)

The Supplemental Restraint System "Air Bag", used along with a seat belt, helps to reduce the risk or severity of injury to the driver and front passenger in a frontal collision. The Supplemental Restraint System consists of air bag modules (located in the center of the steering wheel and on the instrument panel on the passenger side), a diagnosis sensor unit, warning lamp, wiring harness and spiral cable. Information necessary to service the system safely is included in the **RS section** of this Service Manual.

WARNING:

- **To avoid rendering the SRS inoperative, which could increase the risk of personal injury or death in the event of a collision which would result in air bag inflation, all maintenance must be performed by an authorized NISSAN dealer.**
- **Improper maintenance, including incorrect removal and installation of the SRS, can lead to personal injury caused by unintentional activation of the system.**
- **Do not use electrical test equipment on any circuit related to the SRS unless instructed to in this Service Manual. SRS wiring harnesses are covered with yellow insulation either just before the harness connectors or for the complete harness, for easy identification.**

Supplemental Restraint System (SRS) "AIR BAG" (Single Air Bag System)

The Supplemental Restraint System "Air Bag", used along with a seat belt, helps to reduce the risk or severity of injury to the driver in a frontal collision. The Supplemental Restraint System consists of an air bag module (located in the center of the steering wheel), a diagnosis sensor unit, warning lamp and spiral cable. Information necessary to service the system safely is included in the **RS section** of this Service Manual.

WARNING:

- **To avoid rendering the SRS inoperative, which could increase the risk of personal injury or death in the event of a collision which would result in air bag inflation, all maintenance must be performed by an authorized NISSAN dealer.**
- **Improper maintenance, including incorrect removal and installation of the SRS, can lead to personal injury caused by unintentional activation of the system.**
- **Do not use electrical test equipment on any circuit related to the SRS.**

Simpo PDF Merge and Split Unregistered Version - http://www.simpopdf.com

Description

HARNESS CONNECTOR

- All harness connectors have been modified to prevent accidental looseness or disconnection.
- The connector can be disconnected by pushing or lifting the locking section.

CAUTION:
Do not pull the harness when disconnecting the connector.
[Example]

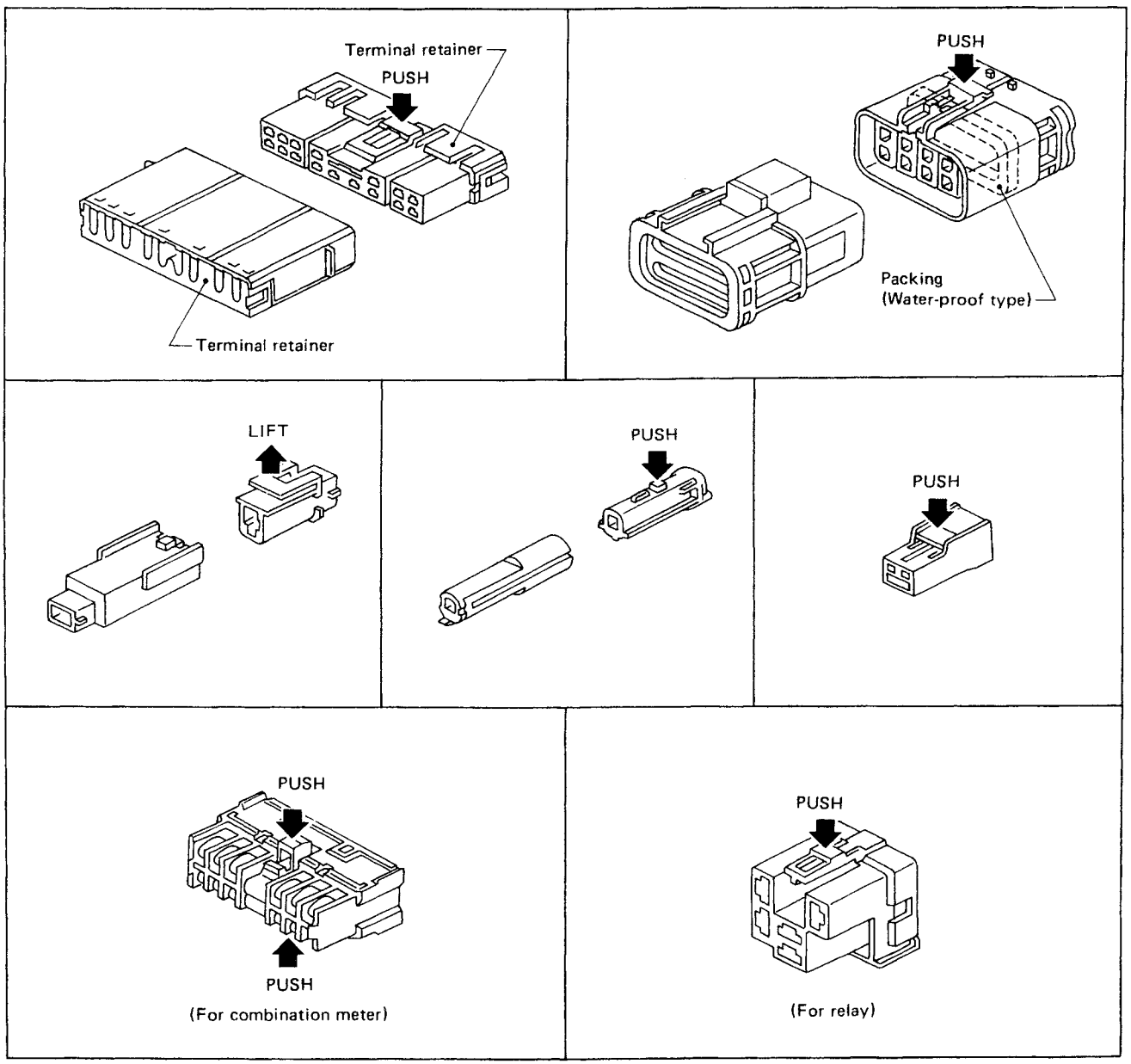

SEL769D

EL

Simpo PDF Merge and Split Unregistered Version - http://www.simpopdf.com

Description

NORMAL OPEN, NORMAL CLOSED AND MIXED TYPE RELAYS

Relays can mainly be divided into three types: normal open, normal closed and mixed type relays.

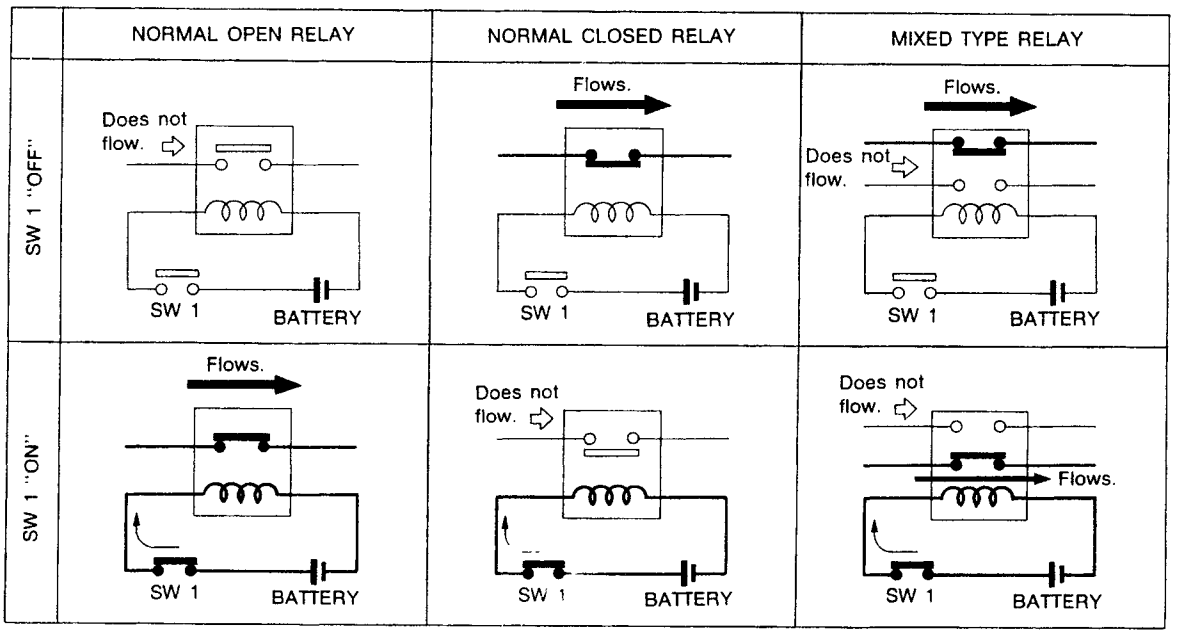

SEL881H

TYPE OF STANDARDIZED RELAYS

1M ..... 1 Make		2M ..... 2 Make	
1T ..... 1 Transfer		1M·1B ..... 1 Make 1 Break	

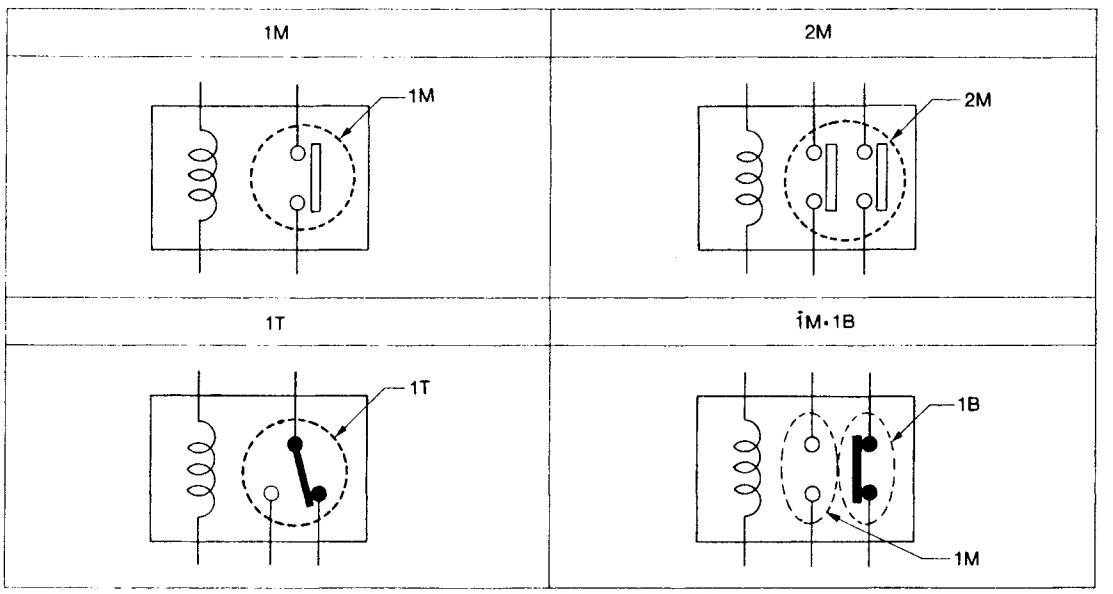

SEL882H

Simpo PDF Merge and Split Unregistered Version - http://www.simpopdf.com

Description (Cont'd)

Type	Outer view	Circuit	Connector symbol and connection	Case color
1T	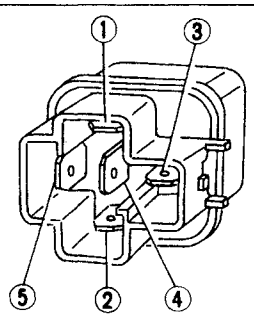	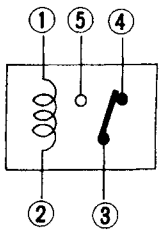	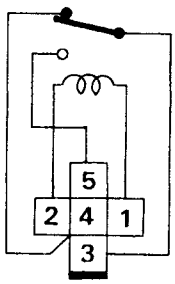	BLACK
2M	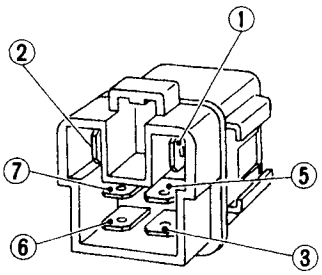	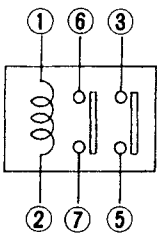	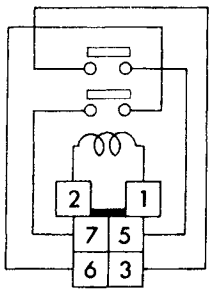	BROWN
1M•1B	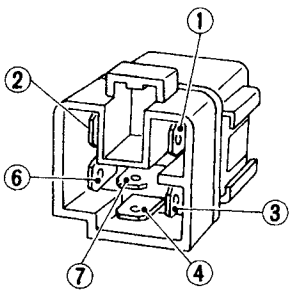	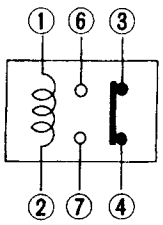	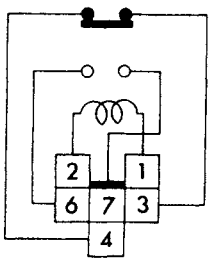	GRAY
1M	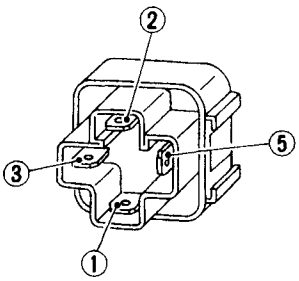	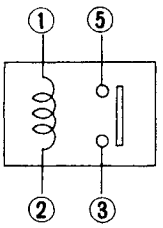	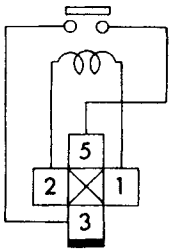	BLUE

The arrangement of terminal numbers on the actual relays may differ from those shown above.

EL

SEL661TA

Simpo PDF Merge and Split Unregistered Version - http://www.simpopdf.com

Schematic

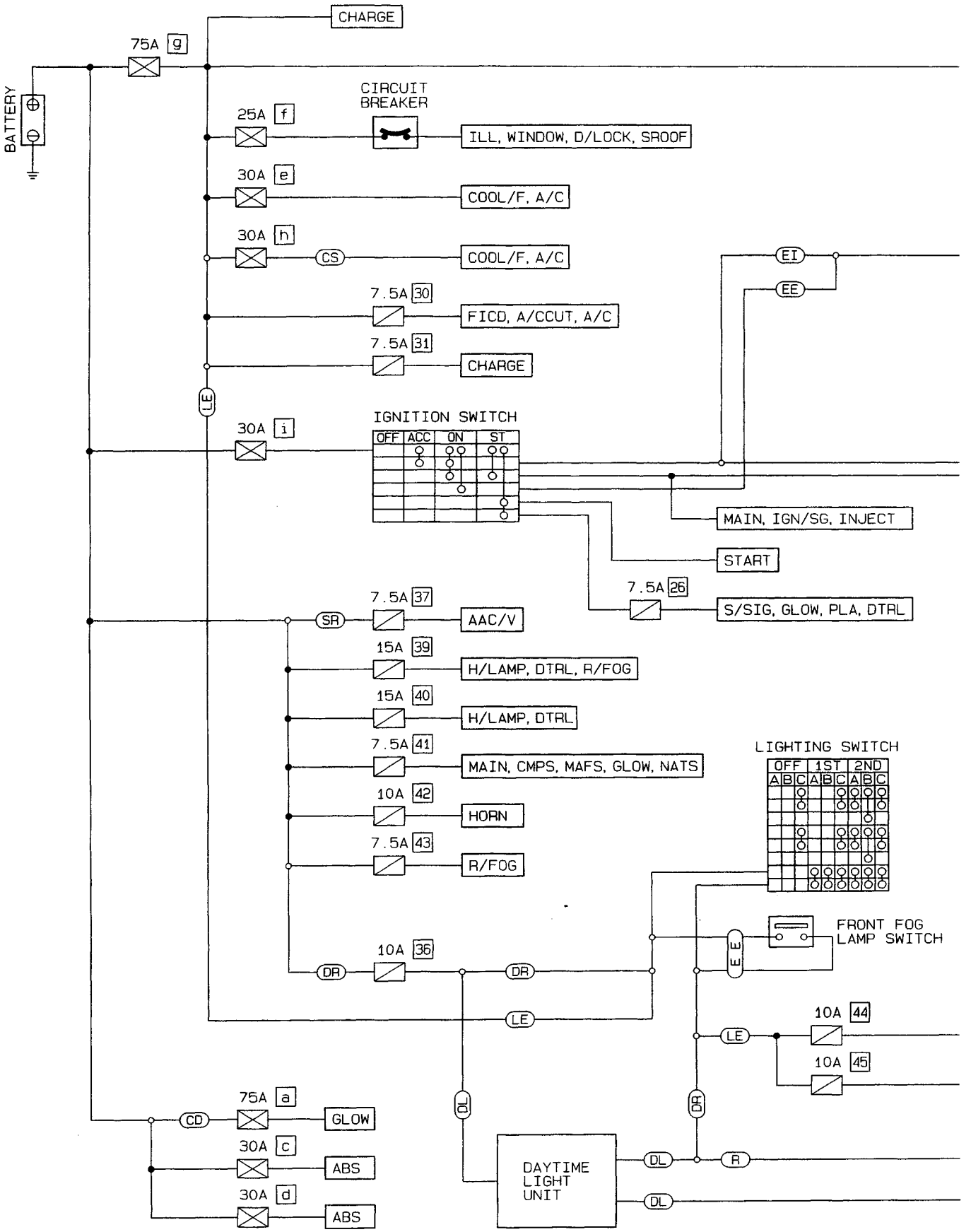

Simpo PDF Merge and Split Unregistered Version - http://www.simpopdf.com

Schematic (Cont'd)

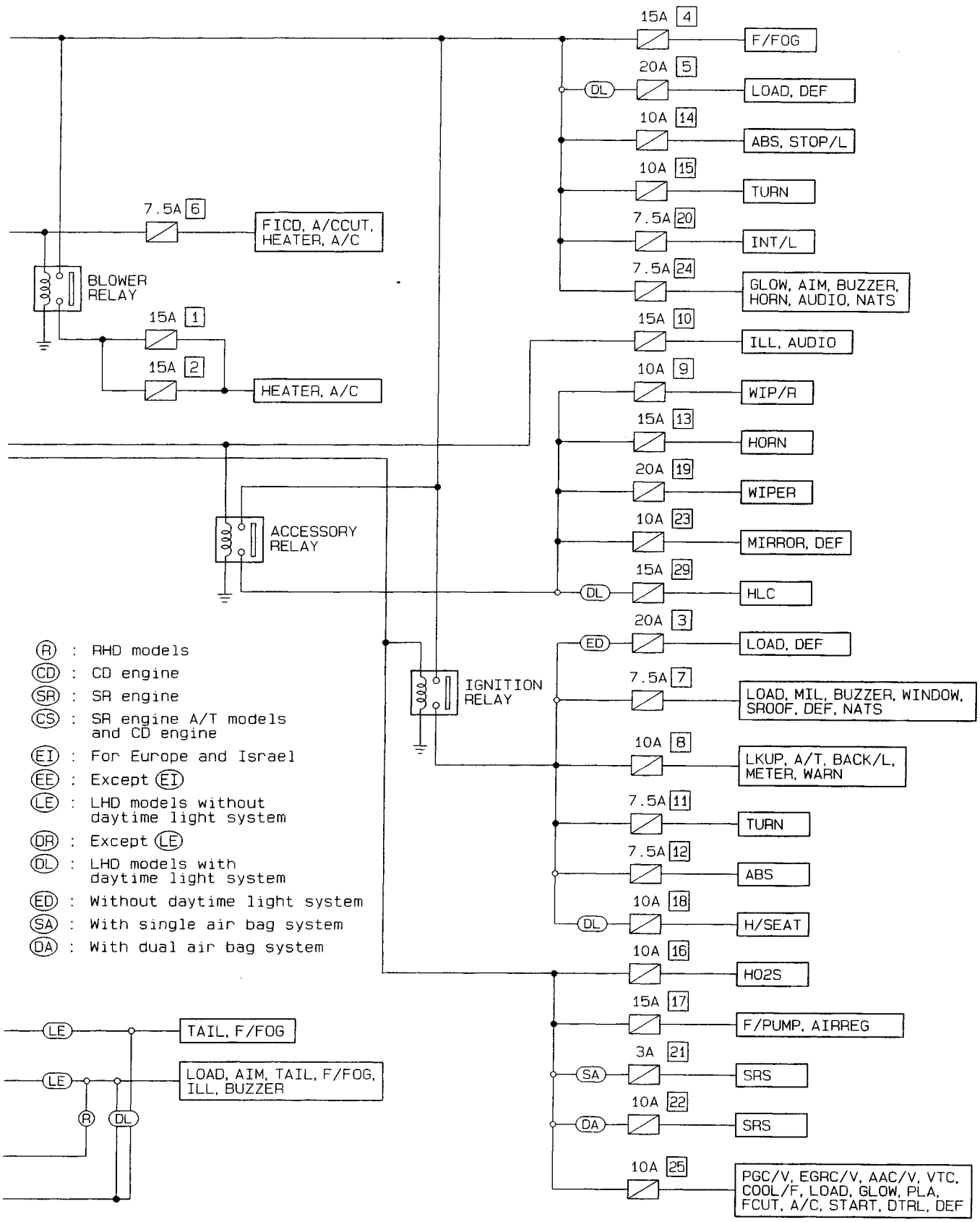

HEL096

EL

Simpo PDF Merge and Split Unregistered Version - http://www.simpopdf.com

Wiring Diagram — POWER —

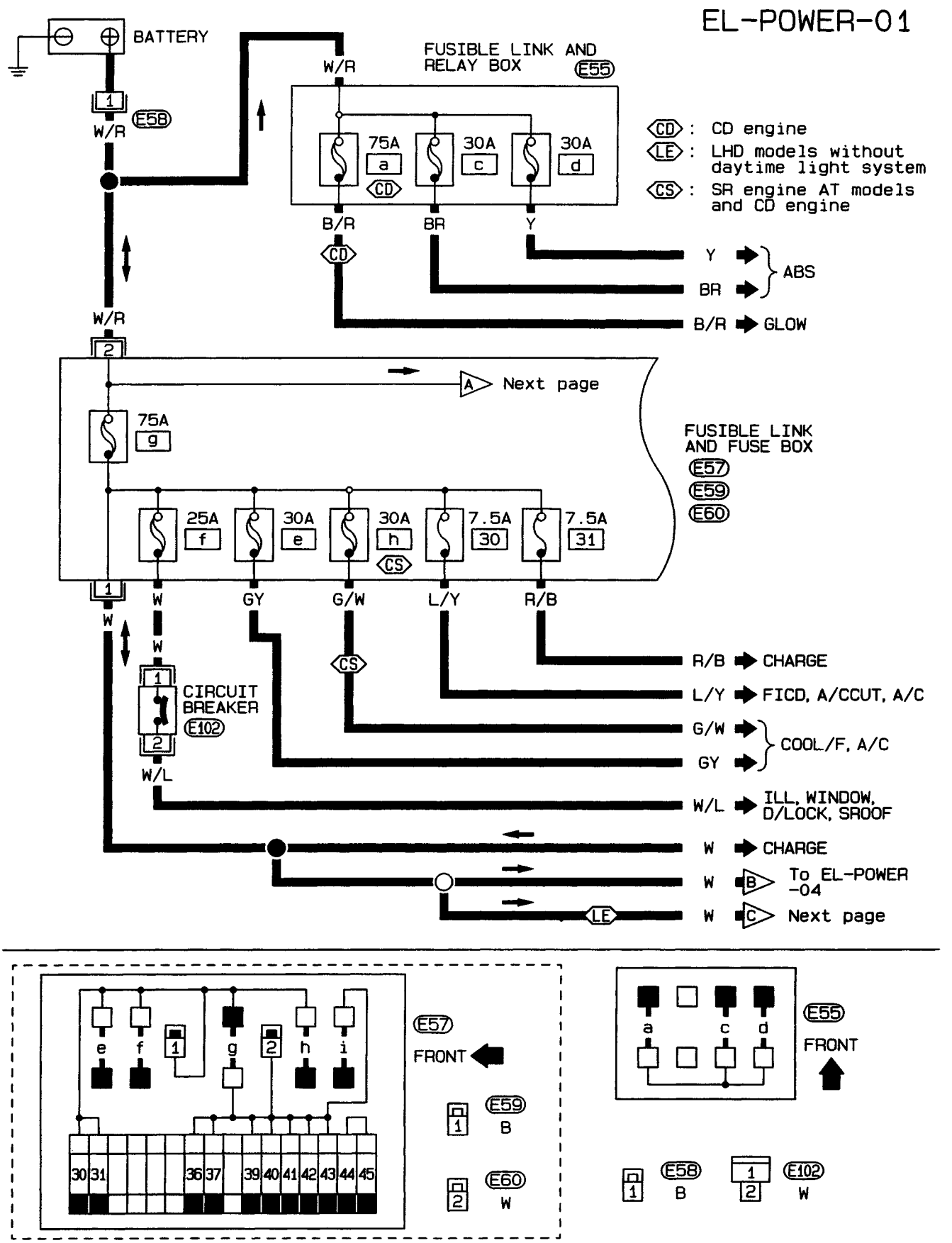

HEL002

Simpo PDF Merge and Split Unregistered Version - http://www.simpopdf.com

Wiring Diagram — POWER — (Cont'd)

EL-POWER-02

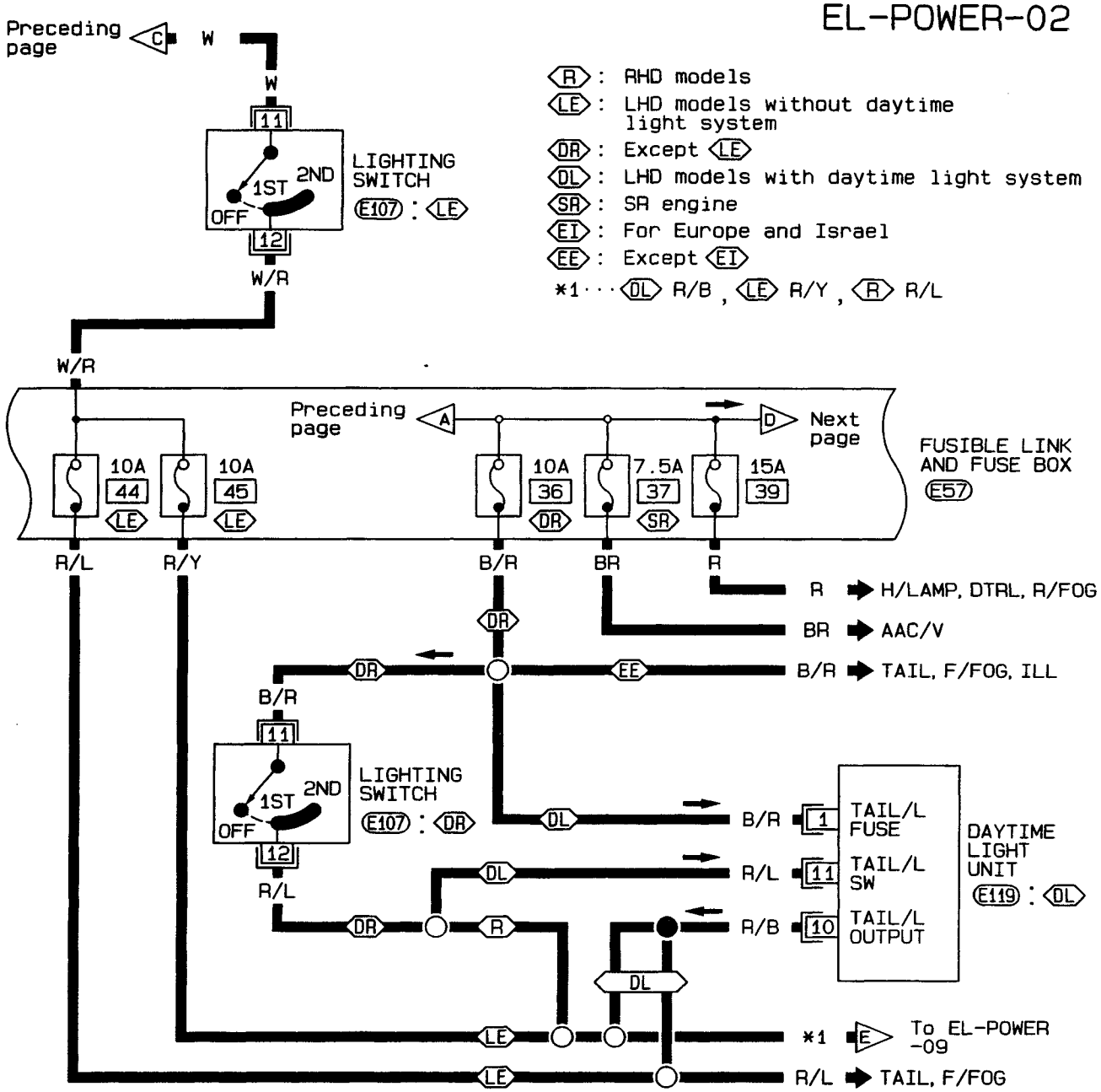

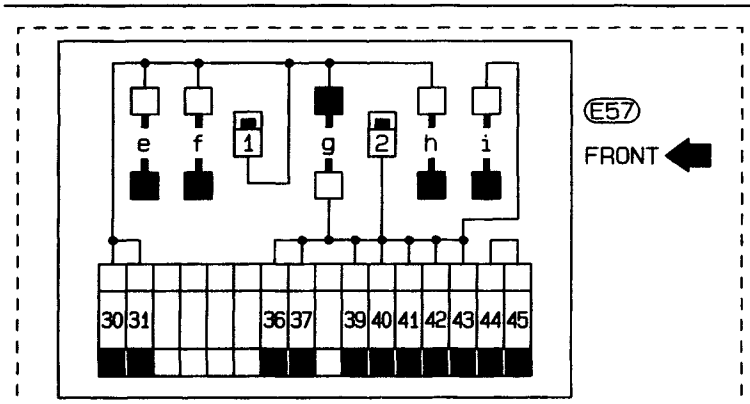

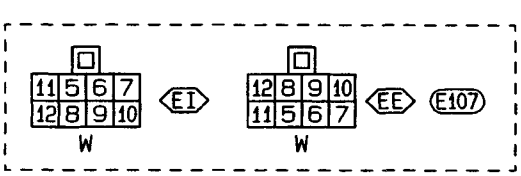

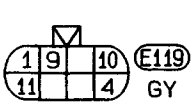

HEL003

Simpo PDF Merge and Split Unregistered Version - http://www.simpopdf.com

Wiring Diagram — POWER — (Cont'd)

EL-POWER-03

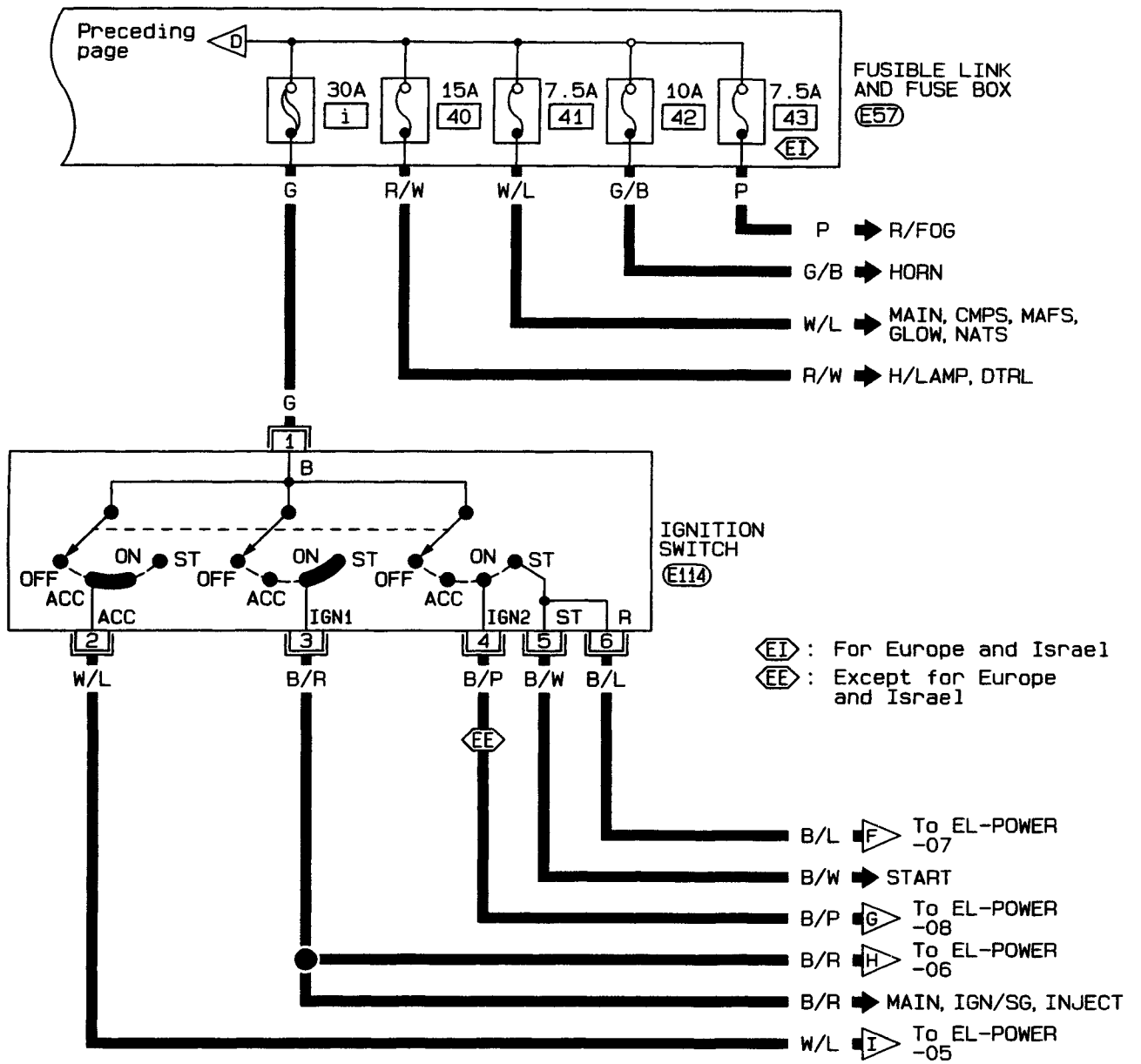

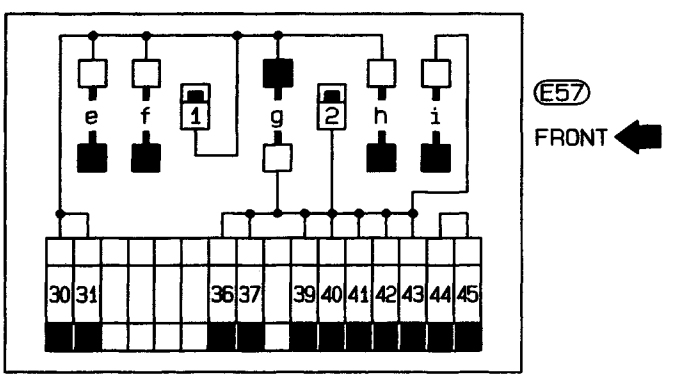

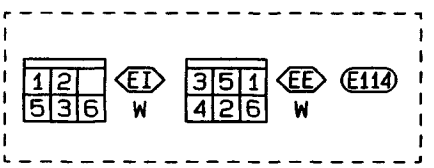

HEL004

Simpo PDF Merge and Split Unregistered Version - http://www.simpopdf.com

Wiring Diagram — POWER — (Cont'd)

EL-POWER-04

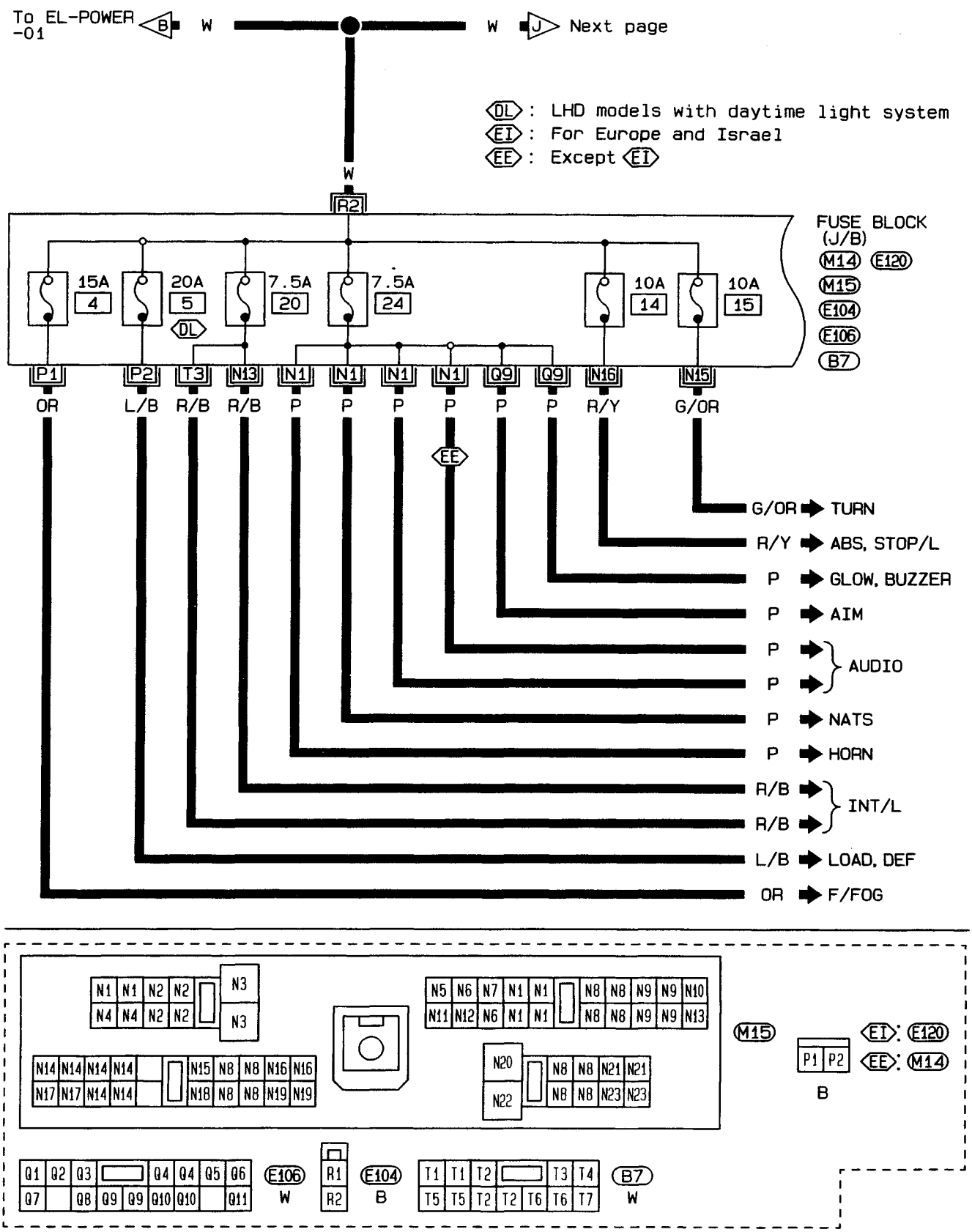

HEL005

EL

Simpo PDF Merge and Split Unregistered Version - https://www.simpopdf.com

Wiring Diagram — POWER — (Cont'd)

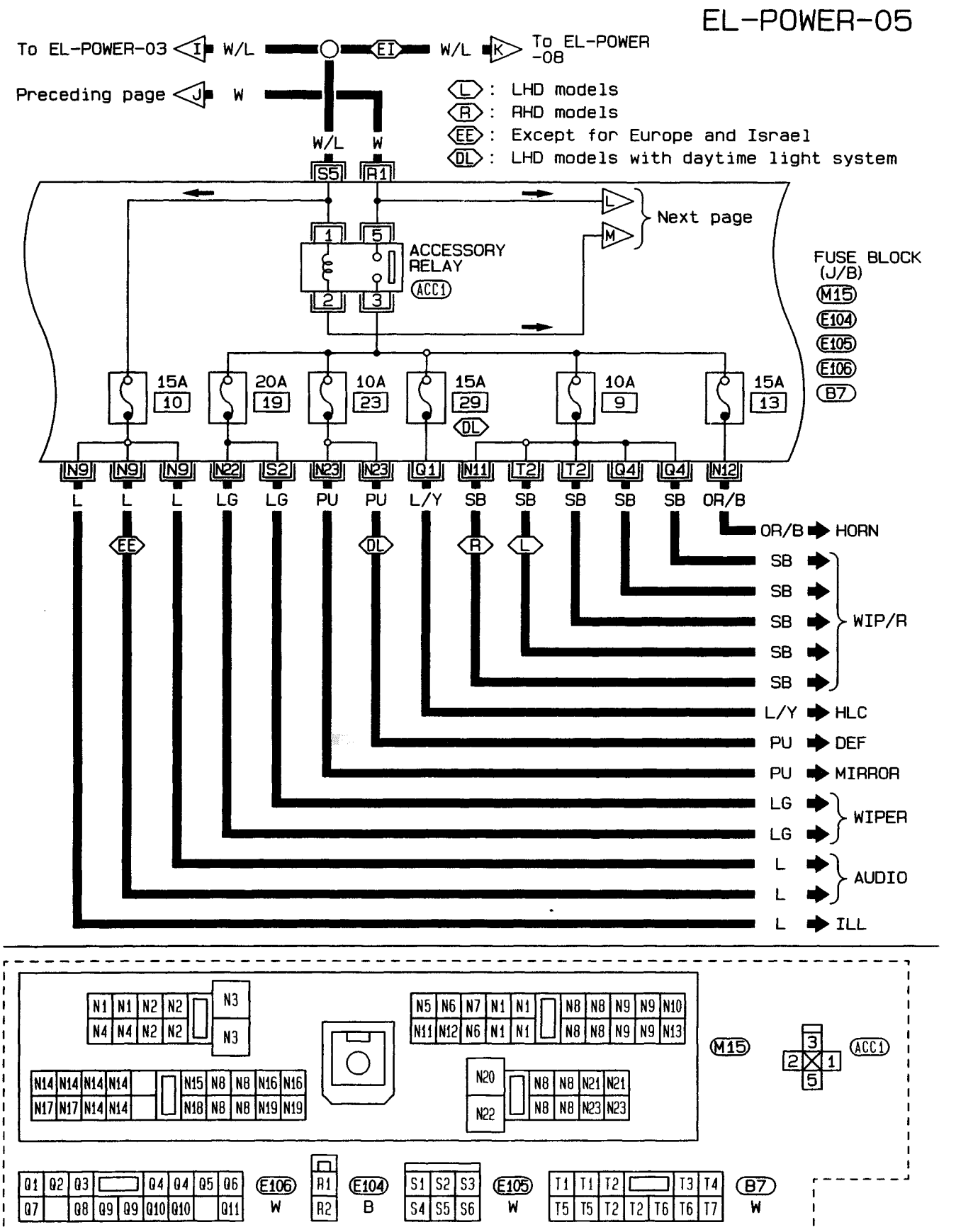

HEL006

Simpo PDF Merge and Split Unregistered Version - http://www.simpopdf.com

Wiring Diagram — POWER — (Cont'd)

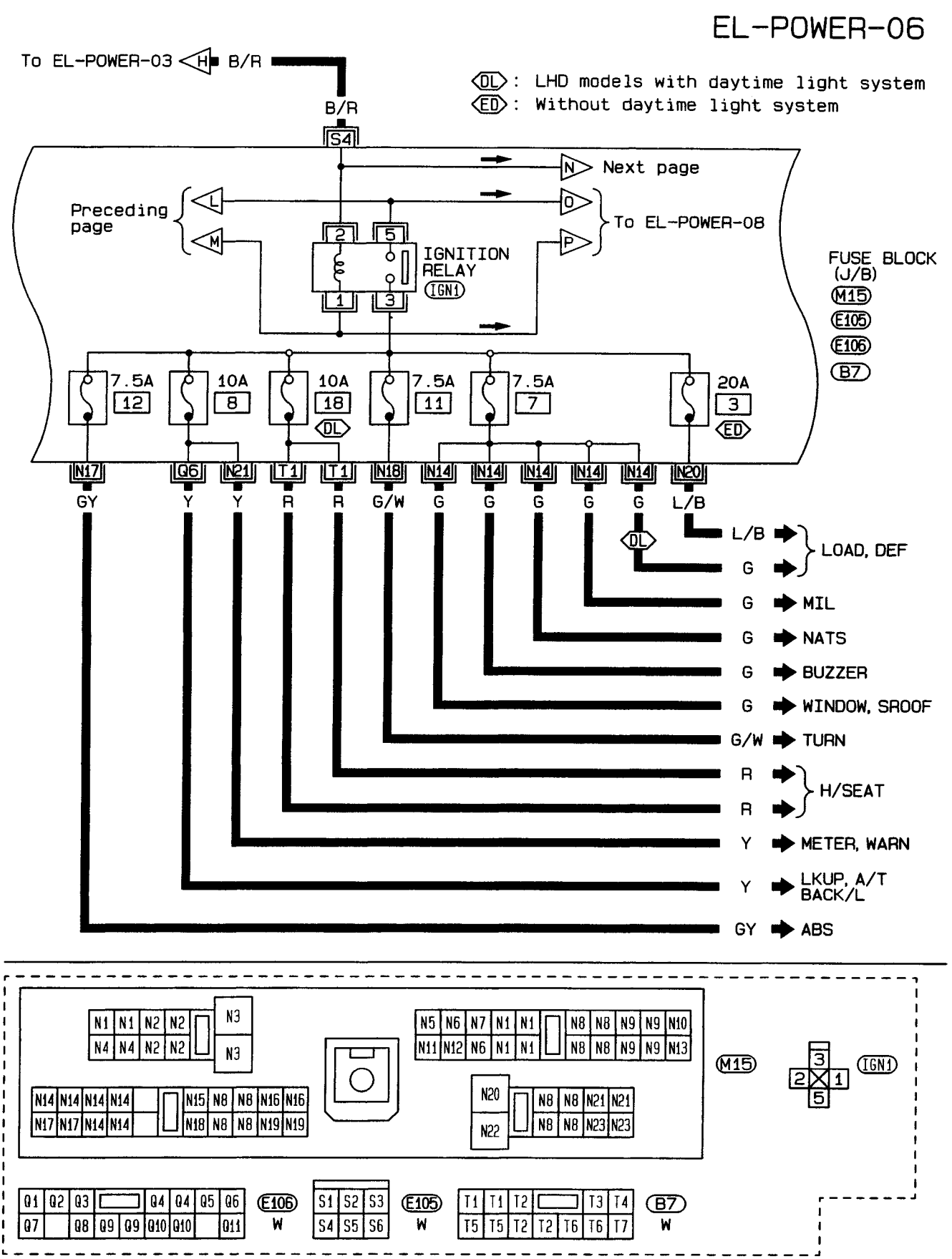

HEL007

Simpo PDF Merge and Split Unregistered Version - http://www.simpopdf.com

Wiring Diagram — POWER — (Cont'd)

EL-POWER-07

(A) : A/T models
(SA) : With single air bag system
(DA) : With dual air bag system

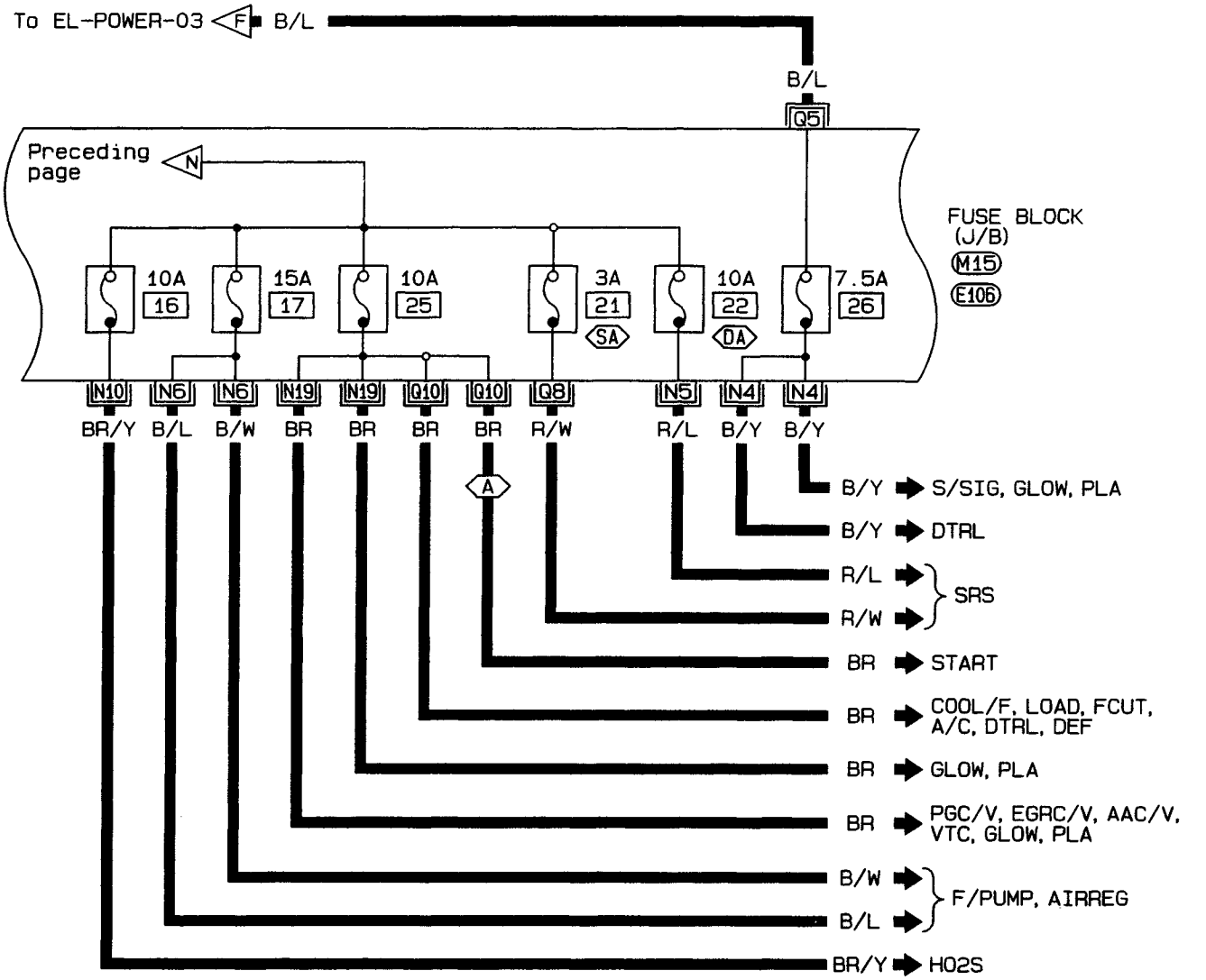

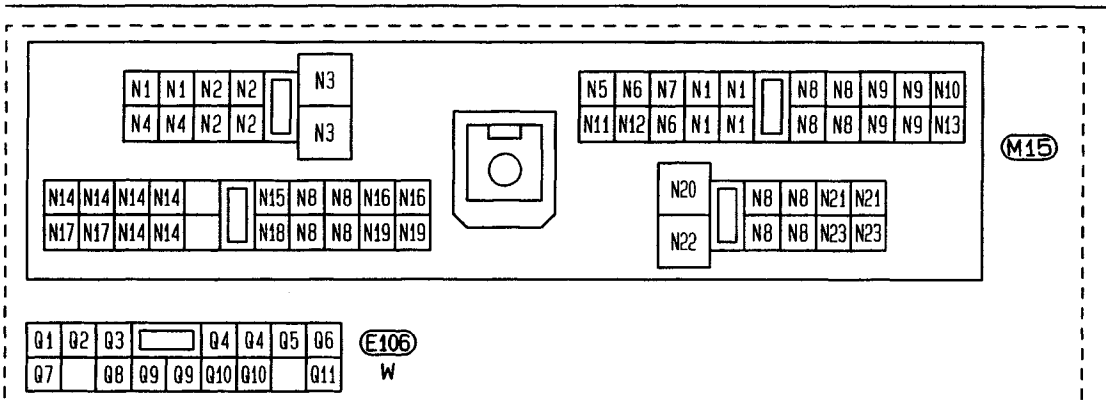

HEL008

Simpo PDF Merge and Split Unregistered Version - http://www.simpopdf.com

Wiring Diagram — POWER — (Cont'd)

EL-POWER-08

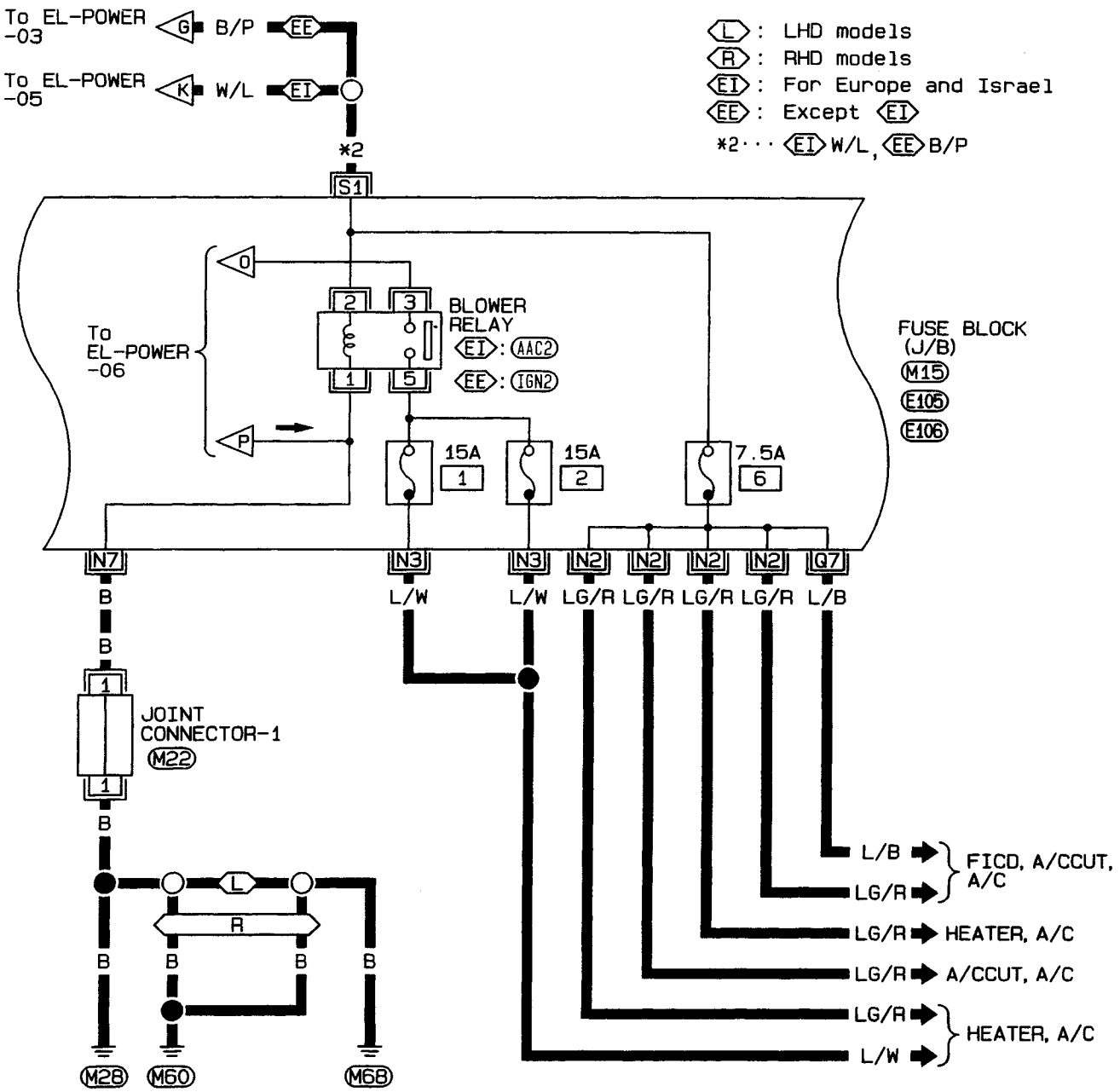

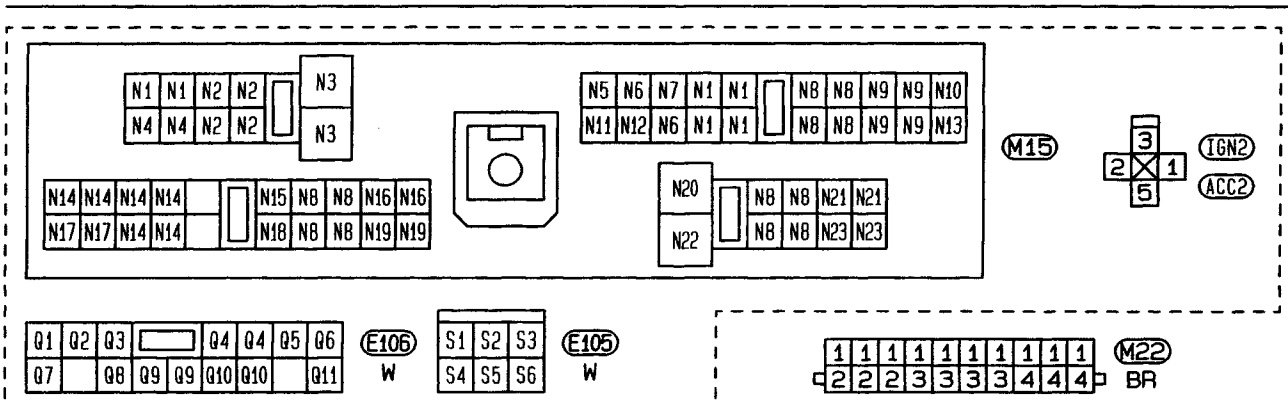

HEL009

Simpo PDF Merge and Split Unregistered Version - http://www.simpopdf.com

Wiring Diagram — POWER — (Cont'd)

EL-POWER-09

(L) : LHD models
(R) : RHD models
(DL) : LHD models with daytime light system
(LE) : LHD models without daytime light system
(DR) : Except (LE)
(TM) : Models with tachometer
*1 ··· (DL) R/B, (LE) R/Y, (R) R/L
*3 ··· (L) R/G, (R) R/L
*4 ··· (L) R/Y, (R) R/L

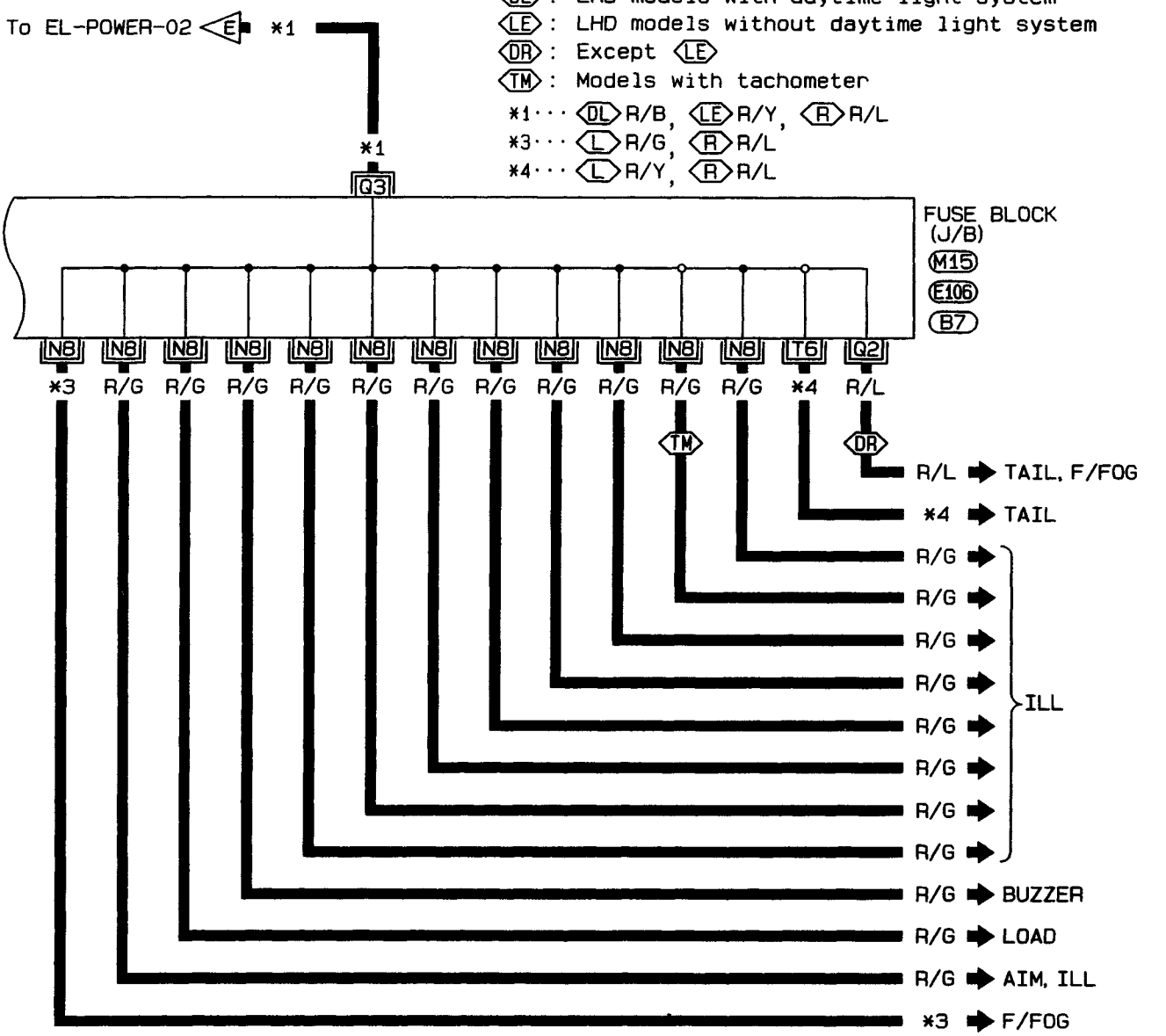

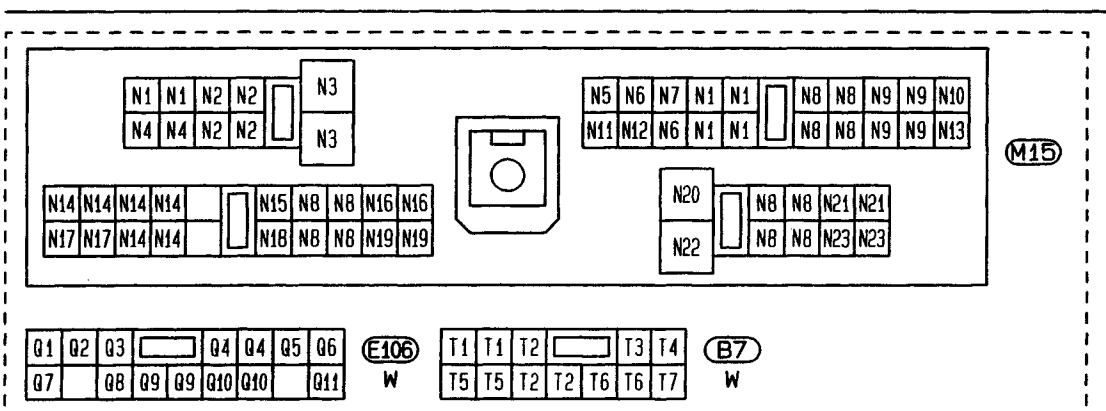

HEL010

Simpo PDF Merge and Split Unregistered Version - http://www.simpopdf.com

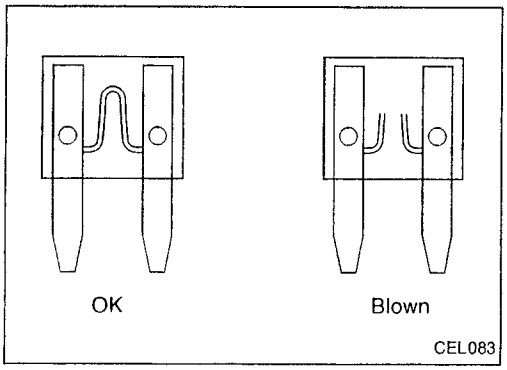

Fuse

- If fuse is blown, be sure to eliminate cause of problem before installing new fuse.
- Use fuse of specified rating. Never use fuse of more than specified rating.
- Do not partially install fuse; always insert it into fuse holder properly.
- Remove fuse for clock if vehicle is not used for a long period of time.

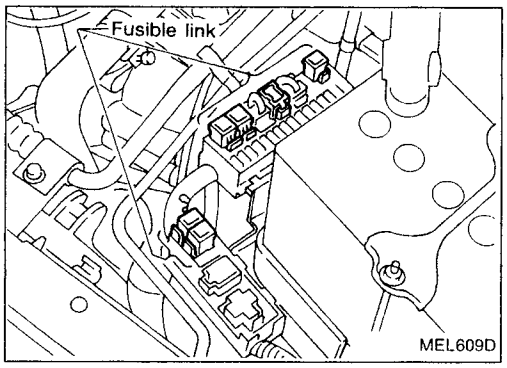

Fusible Link

A melted fusible link can be detected by visual inspection. If its condition is questionable, use circuit tester or test lamp.

CAUTION:

- **If fusible link should melt, it is possible that critical circuit (power supply or large current carrying circuit) is shorted. In such a case, carefully check and eliminate cause of problem.**
- **Never wrap outside of fusible link with vinyl tape.**
  Important: Never let fusible link touch any other wiring harness or vinyl or rubber parts.

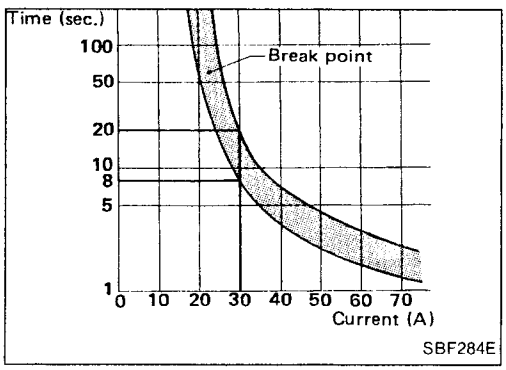

Circuit Breaker

For example, when current is 30A, the circuit is broken within 8 to 20 seconds.

Circuit breakers are used in the following systems.

- Power window
- Power door lock
- Electric sun roof

EL

Simpo PDF Merge and Split Unregistered Version - http://www.simpopdf.com

GROUND	CONNECT TO	CONN. NO.	CELL CORD
E37/E51	AIR BAG DIAGNOSIS SENSOR UNIT (Single air bag system)	E108	RS-SRS
	BRAKE FLUID LEVEL SWITCH	E2	EL-WARN
	CLEARANCE LAMP LH	E50	EL-TAIL/L
	CLEARANCE LAMP RH	E33	EL-TAIL/L
	COOLING FAN MOTOR-1 (1-mode type)	E45	EC-COOL/F HA-A/C
	COOLING FAN MOTOR-1 (2-mode type—GA engine for Europe)	E66	EC-COOL/F HA-A/C
	COOLING FAN MOTOR-1 (2-mode type—except GA engine for Europe)	E46	EC-COOL/F HA-A/C
	COOLING FAN MOTOR-2 (1-mode type)	E39	EC-COOL/F HA-A/C
	COOLING FAN MOTOR-2 (2-mode type—GA engine for Europe)	E67	EC-COOL/F HA-A/C
	COOLING FAN MOTOR-2 (2-mode type—except GA engine for Europe)	E40	EC-COOL/F HA-A/C
	COOLING FAN RELAY-1	E12	EC-COOL/F HA-A/C
	COOLING FAN RELAY-2	E17	EC-COOL/F HA-A/C
	COOLING FAN RELAY-3	E18	EC-COOL/F HA-A/C
	DAYTIME LIGHT UNIT	E119	EL-DTRL
	FRONT FOG LAMP LH	E52	EL-F/FOG
	FRONT FOG LAMP RH	E36	EL-F/FOG
	FRONT TURN SIGNAL LAMP LH	E53	EC-TURN
	FRONT TURN SIGNAL LAMP RH	E32	EC-TURN
	FRONT WIPER AND WASHER SWITCH	E113	EL-WIPER
	FUEL FILTER SWITCH	E5	EL-WARN
	HEADLAMP AIMING MOTOR UNIT LH	E48	EL-AIM
	HEADLAMP AIMING MOTOR UNIT RH	E35	EL-AIM
	HEADLAMP LH	E49	EL-H/LAMP EL-DTRL
	HEADLAMP RH	E34	EL-H/LAMP EL-DTRL
	HEADLAMP WIPER MOTOR LH	E44	EL-HLC
	HEADLAMP WIPER MOTOR RH	E41	EL-HLC
	IACV-FICD SOLENOID VALVE (LHD models with CD20 engine)	E65	EC-A/CCUT HA-A/C
	INHIBITOR SWITCH	E222	EC-PNP/SW AT-A/T EL-START
	NEUTRAL POSITION SWITCH	E220	EC-PNP/SW
	POWER STEERING OIL PRESSURE SWITCH (RHD models with gasoline engine)	E3	EC-PST/SW
	REAR FOG LAMP RELAY	E20	EL-R/FOG
	REAR WIPER AND WASHER SWITCH	E112	EL-WIP/R
	REAR WIPER RELAY	E15	EL-WIP/R
	SIDE TURN SIGNAL LAMP (Driver side)	E1	EL-TURN
	WASHER FLUID LEVEL SWITCH	E30	EL-WARN

Simpo PDF Merge and Split Unregistered Version - http://www.simpopdf.com

GROUND	CONNECT TO	CONN. NO.	CELL CORD
M27	COMBINATION METER (TACHOMETER)	M31	EL-METER
	COMBINATION METER (AIR BAG WARNING LAMP)	M*1	RS-SRS EL-WARN
	COMBINATION METER (CLOCK ILLUMINATION) (For Europe and Israel)	M*1	EL-ILL EL-HORN
	COMBINATION METER (FUEL GAUGE)	M*1	EL-METER
	COMBINATION METER (HIGH BEAM INDICATOR)	M*1	EL-H/LAMP EL-DTRL
	COMBINATION METER (SPEEDOMETER)	M*1	EC-VSS EC-COOL/F EL-METER
	COMBINATION METER (TURN)	M*2	EL-TURN
	COMBINATION METER (WATER TEMP. GAUGE)	M*1	EL-METER
M28/M68 (LHD models) M28/M60/M68 (RHD models)	A/T CONTROL DEVICE (OD CONTROL SWITCH)	M42	AT-A/T
	A/T CONTROL DEVICE (A/T INDICATOR ILLUMINATION)	M42	EL-ILL
	ACCESSORY RELAY (In fuse block)	M15	EL-POWER
	ASHTRAY ILLUMINATION	M44	EL-ILL
	BLOWER RELAY (In fuse block)	M15	EL-POWER
	CIGARETTE LIGHTER SOCKET	M43	EL-HORN
	COMBINATION FLASHER UNIT	M20	EL-TURN
	COMBINATION METER (METER ILLUMINATION) (For Europe and Israel)	M30 M32	EL-ILL
	DATA LINK CONNECTOR FOR CONSULT	M13	EC-MIL BR-ABS RS-SRS
	DOOR LOCK TIMER (Type-1)	M34	EL-D/LOCK
	DOOR LOCK TIMER (Type-2)	M35	EL-D/LOCK
	DOOR MIRROR REMOTE CONTROL SWITCH	M9	EL-MIRROR
	ECM (ENGINE CONTROL MODULE)	M39	EC-GLOW
	FAN SWITCH	M45	EC-A/CCUT EC-LOAD HA-A/C
	FAN SWITCH ILLUMINATION	M48	HA-A/C EL-ILL
	FRONT FOG LAMP SWITCH	M10	EL-F/FOG EL-ILL
	FRONT WIPER AMPLIFIER	M74	EL-WIPER
	FRONT WIPER MOTOR (With ABS, dual air bag or rear power window)	M83	EL-WIPER
	GLOVE BOX LAMP SWITCH	M66	EL-ILL
	HAZARD SWITCH	M54	EL-TURN EL-ILL
	HEADLAMP AIMING SWITCH	M11	EL-AIM
	HEADLAMP WIPER AND WASHER SWITCH	M56	EL-ILL EL-HLC
	IGNITION RELAY (In fuse block)	M15	EL-POWER
	ILLUMINATION CONTROL SWITCH	M21	EL-ILL
	MIRROR DEFOGGER RELAY	M17	EL-DEF
	NATS IMMU	M36	EL-NATS

*1: M30 (With tachometer), M32 (Without tachometer)
*2: M30 (Without tachometer), M31 (With tachometer)

Simpo PDF Merge and Split Unregistered Version - https://www.simpopdf.com

GROUND	CONNECT TO	CONN. NO.	CELL CORD
M28/M68 (LHD models) M28/M60/M68 (RHD models)	POWER STEERING OIL PRESSURE SWITCH (LHD models without ABS, dual air bag and rear power window)	M82	EC-PST/SW
	POWER WINDOW RELAY	M16	EL-ILL EL-WINDOW
	REAR FOG LAMP SWITCH	M55	EL-R/FOG EL-ILL EL-BUZZER
	REAR WINDOW DEFOGGER SWITCH	M53	EL-ILL EL-DEF
	REAR WINDOW DEFOGGER TIMER	M37	EL-DEF
	REAR WIPER AMPLIFIER (RHD models)	M21	EL-WIP/R
	RECIRCULATION SWITCH	M46	HA-A/C
	SIDE TURN SIGNAL LAMP (Passenger side) (GA engine without ABS, dual air bag and rear power window)	M81	EL-TURN
	SUN ROOF RELAY	M16	EL-SROOF
	WARNING BUZZER UNIT (For Australia)	M38	EL-BUZZER
	FRONT WIPER MOTOR (With ABS, dual air bag or rear power window)	B105	EL-WIPER
	REAR WIPER AMPLIFIER (LHD models)	B8	EL-WIP/R
	IACV-FICD SOLENOID VALVE (RHD models with CD engine)	B102	EC-A/CCUT HA-A/C
	POWER STEERING OIL PRESSURE SWITCH (LHD models with ABS, dual air bag or rear power window)	B102	EC-PST/SW
	SIDE TURN SIGNAL LAMP (Passenger side) (Except GA engine without ABS, dual air bag and rear power window)	B108	EL-TURN
	AIR BAG DIAGNOSIS SENSOR UNIT (Dual air bag system)	Z1	RS-SRS
	SPOT LAMP	R2	EL-INT/L
	DOOR LOCK ACTUATOR (Driver side)	D8	EL-D/LOCK
	DOOR LOCK ACTUATOR (Passenger side)	D38	EL-D/LOCK
	DOOR MIRROR DEFOGGER (Driver side)	D4	EL-DEF
	DOOR MIRROR DEFOGGER (Passenger side)	D34	EL-DEF
	LOCK KNOB SWITCH	D9	EL-D/LOCK
	POWER WINDOW MAIN SWITCH (Without rear power window)	D6	EL-WINDOW
	POWER WINDOW MAIN SWITCH (With rear power window)	D7	EL-WINDOW EL-D/LOCK

Simpo PDF Merge and Split Unregistered Version - http://www.simpopdf.com

GROUND	CONNECT TO	CONN. NO.	CELL CORD
F13/F14	DISTRIBUTOR (CAMSHAFT POSITION SENSOR)	F24	EC-CMPS
	DISTRIBUTOR (POWER TRANSISTOR)	F24	EC-IGN/SG
	ECM (ECCS CONTROL MODULE)	F1	EC-MAIN
	IACV-FICD SOLENOID VALVE (GA16DE engine except for Europe and Israel)	F9	EC-FICD HA-A/C
	IACV-FICD SOLENOID VALVE (GA engine for Europe and Israel and GA15DE engine)	F11	EC-FICD HA-A/C
	SHIELD WIRE (CAMSHAFT POSITION SENSOR)	F24	EC-CMPS
	SHIELD WIRE (HEATED OXYGEN SENSOR)	F23	EC-HO2S
	SHIELD WIRE (KNOCK SENSOR) (GA engine)	F102	EC-KS
	SHIELD WIRE (MASS AIR FLOW SENSOR) (GA engine for Europe and Israel and GA15DE engine)	F12	EC-MAFS
	SHIELD WIRE (MASS AIR FLOW SENSOR) (GA16DE engine except for Europe and Israel and SR engine)	F27	EC-MAFS
	SHIELD WIRE (OXYGEN SENSOR)	F22	EC-O2S
	SHIELD WIRE (THROTTLE POSITION SENSOR)	F8	EC-TPS
	IACV-AIR REGULATOR	E214	EC-AIRREG
	IACV-FICD SOLENOID VALVE (SR engine)	E212	EC-FICD HA-A/C
	SHIELD WIRE (KNOCK SENSOR) (SR engine)	E215	EC-KS
E205	ALTERNATOR	E233	EL-CHARGE EL-WARN
B11/B32 (Sedan) B11/B32/D105 (Hatchback)	FRONT DOOR SWITCH (Driver side)	B9	RS-SRS EL-BUZZER
	FUEL PUMP	B17	EC-F/PUMP
	FUEL TANK GAUGE UNIT	B18	EL-METER EL-WARN
	HEATED SEAT LH	B12	EL-H/SEAT
	HEATED SEAT RH	B16	EL-H/SEAT
	HEATED SEAT SWITCH LH	B13	EL-H/SEAT
	HEATED SEAT SWITCH RH	B15	EL-H/SEAT
	REAR COMBINATION LAMP LH (TAIL AND STOP) (Hatchback)	B27	EL-TAIL/L EL-STOP/L
	REAR COMBINATION LAMP LH (TURN SIGNAL) (Hatchback)	B27	EL-TURN
	REAR COMBINATION LAMP RH (TAIL AND STOP) (Hatchback)	B28	EL-TAIL/L EL-STOP/L
	REAR COMBINATION LAMP RH (TURN SIGNAL) (Hatchback)	B28	EL-TURN
	HIGH-MOUNTED STOP LAMP (In rear air spoiler) (Hatchback)	D112	EL-STOP/L
	HIGH-MOUNTED STOP LAMP (On rear window) (Hatchback)	D108	EL-STOP/L
	LICENSE PLATE LAMP LH (Hatchback)	D107	EL-TAIL/L
	LICENSE PLATE LAMP RH (Hatchback)	D109	EL-TAIL/L

Simpo PDF Merge and Split Unregistered Version - http://www.simpopdf.com

GROUND	CONNECT TO	CONN. NO.	CELL CORD
B11/B32 (Sedan) B11/B32/D105 (Hatchback)	LUGGAGE ROOM LAMP SWITCH	D110	EL-INT/L
	REAR COMBINATION LAMP LH (BACK-UP)	D103	EL-BACK/L
	REAR COMBINATION LAMP LH (REAR FOG) (LHD Hatchback models for Europe)	D103	EL-R/FOG
	REAR COMBINATION LAMP LH (TAIL) (Hatchback except for Europe and Australia)	D103	EL-TAIL/L
	REAR COMBINATION LAMP RH (BACK-UP)	D111	EL-BACK/L
	REAR COMBINATION LAMP RH (REAR FOG) (RHD Hatchback models for Europe)	D111	EL-R/FOG
	REAR COMBINATION LAMP RH (TAIL) (Hatchback except for Europe and Australia)	D111	EL-TAIL/L
T10/T11	HIGH-MOUNTED STOP LAMP (Sedan)	T6	EL-STOP/L
	LICENSE PLATE LAMP LH (Sedan)	T5	EL-TAIL/L
	LICENSE PLATE LAMP RH (Sedan)	T7	EL-TAIL/L
	REAR COMBINATION LAMP LH (BACK-UP) (LHD Sedan models)	T3	EL-BACK/L
	REAR COMBINATION LAMP LH (REAR FOG) (Sedan)	T3	EL-R/FOG
	REAR COMBINATION LAMP LH (TAIL AND STOP) (Sedan)	T2	EL-TAIL/L EL-STOP/L
	REAR COMBINATION LAMP LH (TAIL) (Sedan except for Europe and Australia)	T3	EL-TAIL/L
	REAR COMBINATION LAMP LH (TURN SIGNAL) (Sedan)	T2	EL-TURN
	REAR COMBINATION LAMP RH (BACK-UP) (Sedan)	T8	EL-BACK/L
	REAR COMBINATION LAMP RH (REAR FOG) (RHD Sedan models)	T8	EL-R/FOG
	REAR COMBINATION LAMP RH (TAIL AND STOP) (Sedan)	T9	EL-TAIL/L EL-STOP/L
	REAR COMBINATION LAMP RH (TAIL) (Sedan except for Europe and Australia)	T8	EL-TAIL/L
	REAR COMBINATION LAMP RH (TURN SIGNAL) (Sedan)	T9	EL-TAIL/L
	TRUNK ROOM LAMP SWITCH	T4	EL-INT/L
B110	SHIELD WIRE (WHEEL SPEED SENSOR FRONT LH) (LHD models)	E4	BR-ABS
	SHIELD WIRE (WHEEL SPEED SENSOR FRONT RH) (RHD models)	E11	BR-ABS
	SHIELD WIRE (WHEEL SPEED SENSOR FRONT LH) (RHD models)	B106	BR-ABS
	SHIELD WIRE (WHEEL SPEED SENSOR FRONT RH) (LHD models)	B107	BR-ABS
B112	ABS CONTROL UNIT	B111	BR-ABS
	ABS RELAY BOX	B104	BR-ABS
B204	REAR WINDOW DEFOGGER	B203	EL-DEF

Simpo PDF Merge and Split Unregistered Version - http://www.simpopdf.com

CAUTION:
- **If it becomes necessary to start the engine with a booster battery and jumper cables, use a 12-volt booster battery.**
- **After connecting battery cables, ensure that they are tightly clamped to battery terminals for good contact.**
- **Never add distilled water through the hole used to check specific gravity.**

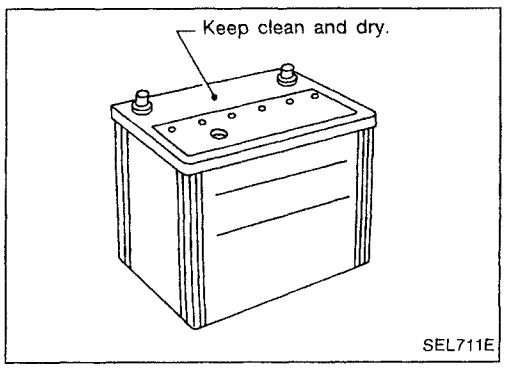

How to Handle Battery

METHODS OF PREVENTING OVER-DISCHARGE

The following precautions must be taken to prevent over-discharging a battery.
- The battery surface (particularly its top) should always be kept clean and dry.
- The terminal connections should be clean and tight.
- At every routine maintenance, check the electrolyte level.

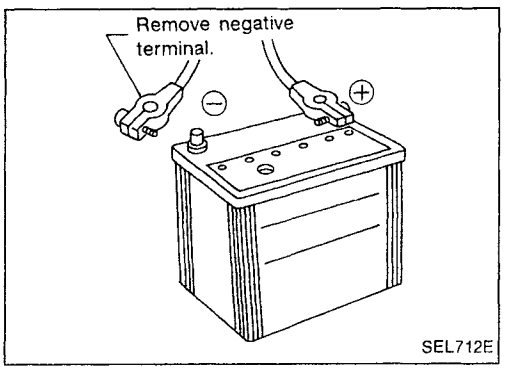

- When the vehicle is not going to be used over a long period of time, disconnect the negative battery terminal. (If the vehicle has an extended storage switch, turn it off.)

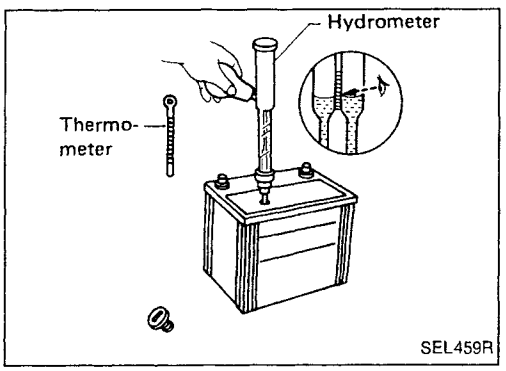

- Check the charge condition of the battery.
  Periodically check the specific gravity of the electrolyte. Keep a close check on charge condition to prevent overdischarge.

CHECKING ELECTROLYTE LEVEL

WARNING:
Do not allow battery fluid to come in contact with skin, eyes, fabrics, or painted surfaces. After touching a battery, do not touch or rub your eyes until you have thoroughly washed your hands. If the acid contacts the eyes, skin or clothing, immediately flush with water for 15 minutes and seek medical attention.

Simpo PDF Merge and Split Unregistered Version - http://www.simpopdf.com

How to Handle Battery (Cont'd)

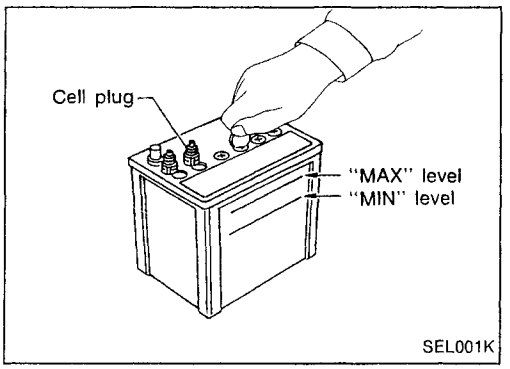

- Remove the cell plug using a suitable tool.
- Add distilled water up to the MAX level.

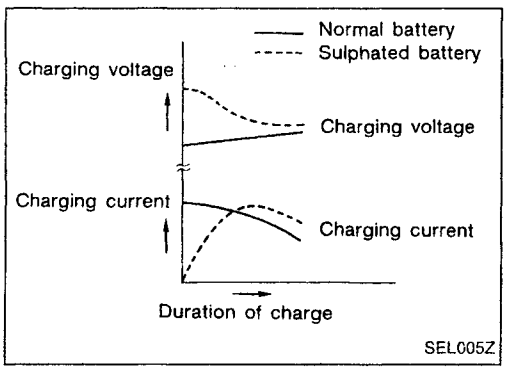

SULPHATION

A battery will be completely discharged if it is left unattended for a long time and the specific gravity becomes less than 1.100. This may result in sulphation on the cell plates.
To find if a discharged battery has been "sulphated", pay attention to its voltage and current when charging it. As shown in the figure at left, if the battery has been "sulphated", less current and higher voltage may be observed in the initial stage of charging.

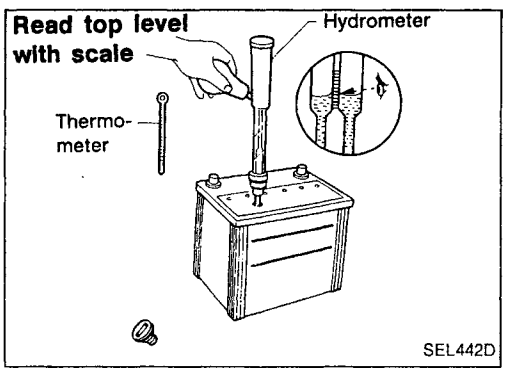

SPECIFIC GRAVITY CHECK

1. Read hydrometer and thermometer indications at eye level.

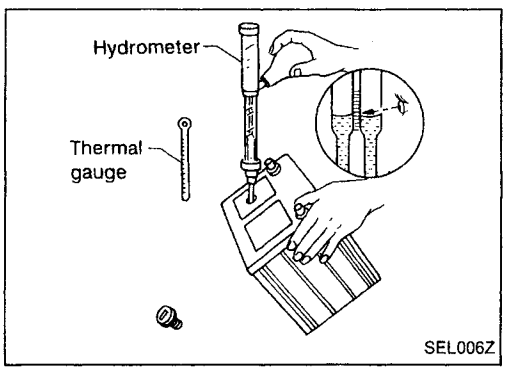

- When electrolyte level is too low, tilt battery case to raise it for easy measurement.

Simpo PDF Merge and Split Unregistered Version - http://www.simpopdf.com

How to Handle Battery (Cont'd)

2. Convert into specific gravity at 20°C (68°F).

Example:

- When electrolyte temperature is 35°C (95°F) and specific gravity of electrolyte is 1.230, converted specific gravity at 20°C (68°F) is 1.240.
- When electrolyte temperature is 0°C (32°F) and specific gravity of electrolyte is 1.210, converted specific gravity at 20°C (68°F) is 1.196.

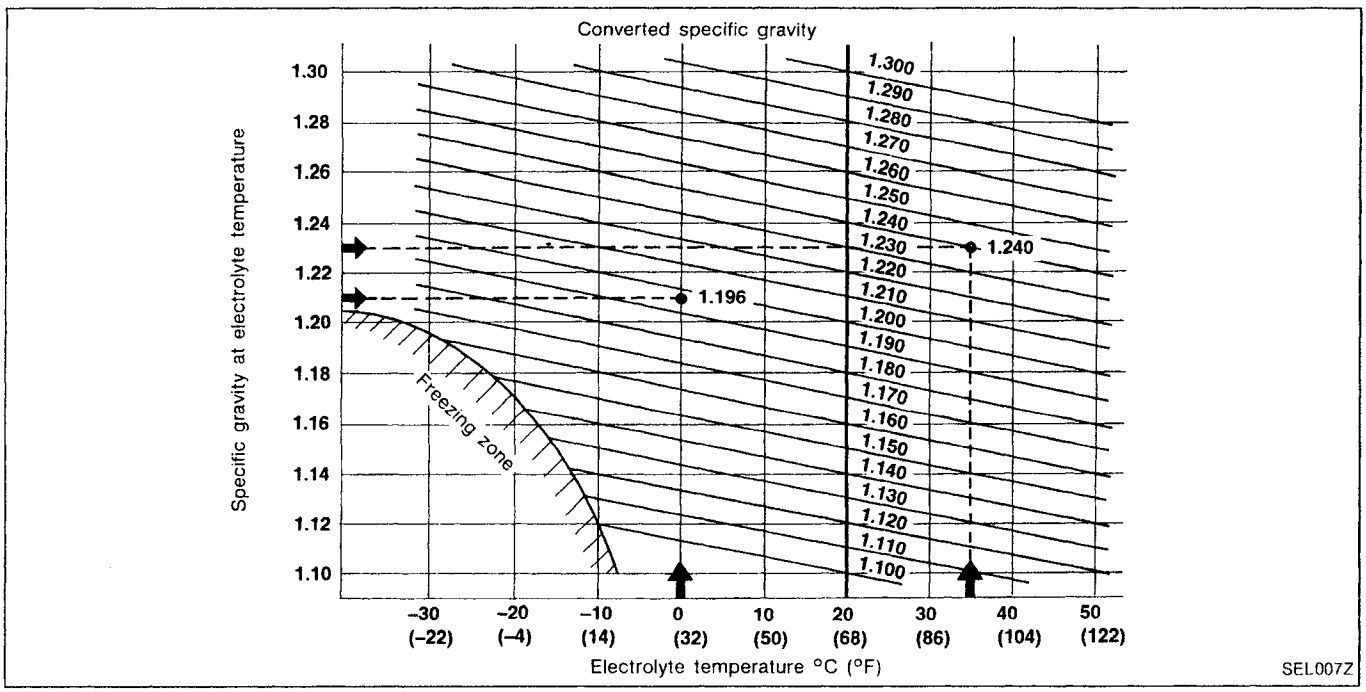

EL

Simpo PDF Merge and Split Unregistered Version - http://www.simpopdf.com

Battery Test and Charging Chart

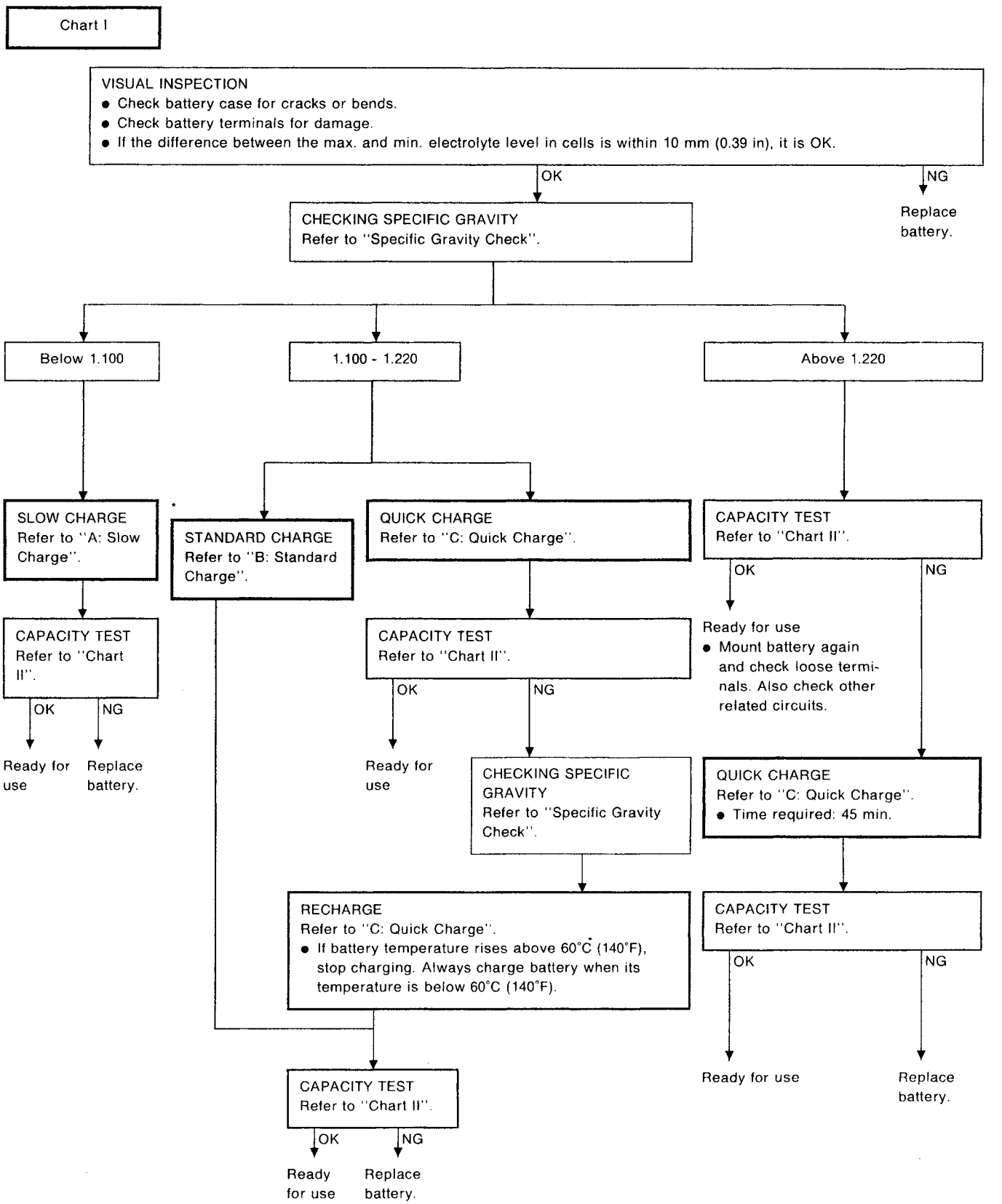

*** "STANDARD CHARGE" is recommended if the vehicle is in storage after charging.**

Simpo PDF Merge and Split Unregistered Version - http://www.simpopdf.com

Battery Test and Charging Chart (Cont'd)

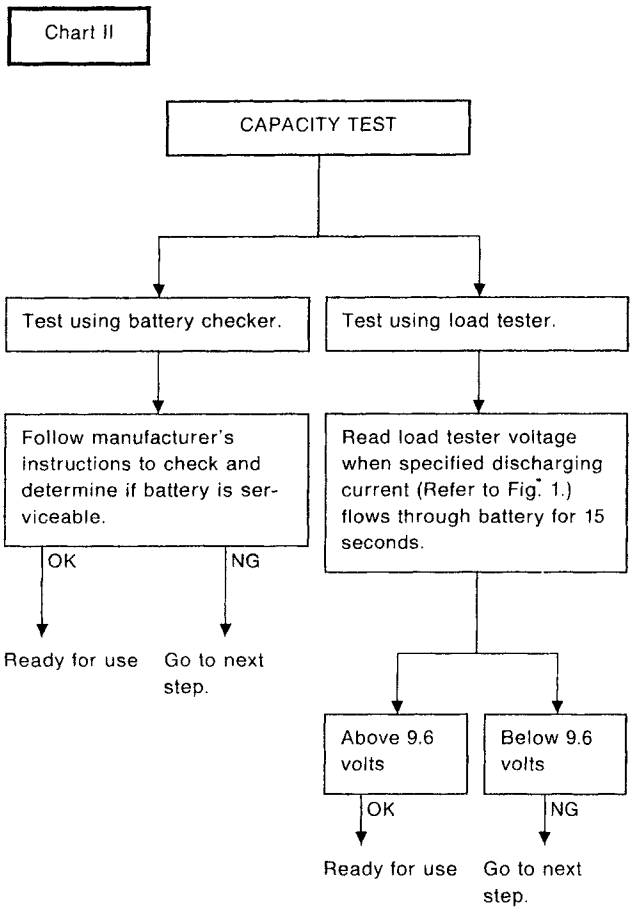

- Check battery type and determine the specified current using the following table.

Fig. 1 DISCHARGING CURRENT (Load Tester)

Type	Current (A)
28B19R(L)	90
34B19R(L)	99
46B24R(L)	135
55B24R(L)	135
50D23R(L)	150
55D23R(L)	180
65D26R(L)	195
80D26R(L)	195
75D31R(L)	210
95D31R(L)	240
115D31R(L)	240
95E41R(L)	300
130E41R(L)	330

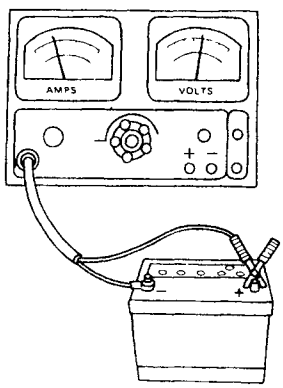

SEL008Z

EL

Simpo PDF Merge and Split Unregistered Version - http://www.simpopdf.com

Battery Test and Charging Chart (Cont'd)

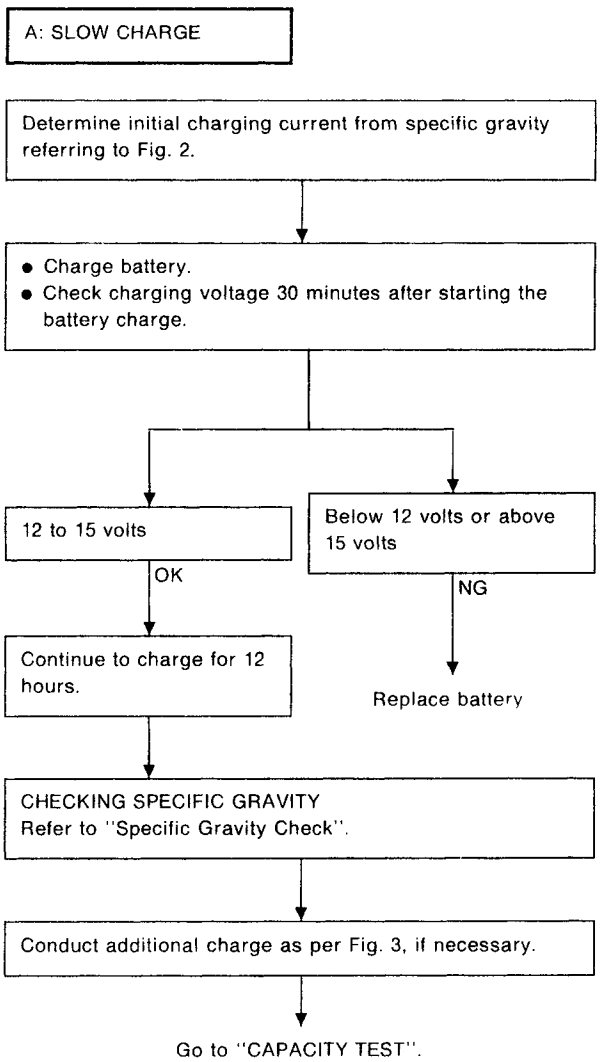

Fig. 2 INITIAL CHARGING CURRENT SETTING (Slow charge)

CONVERTED SPECIFIC GRAVITY	BATTERY TYPE												
	28B19R(L)	34B19R(L)	46B24R(L)	55B24R(L)	50D23R(L)	55D23R(L)	65D26R(L)	80D26R(L)	75D31R(L)	95D31R(L)	115D31R(L)	95E41R(L)	130E41R(L)
Below 1.100	4.0 (A)		5.0 (A)		7.0 (A)		8.0 (A)		9.0 (A)	10.0 (A)			14.0 (A)

- Check battery type and determine the specified current using the table shown above.
- After starting charging, adjustment of charging current is not necessary.

Fig. 3 ADDITIONAL CHARGE (Slow charge)

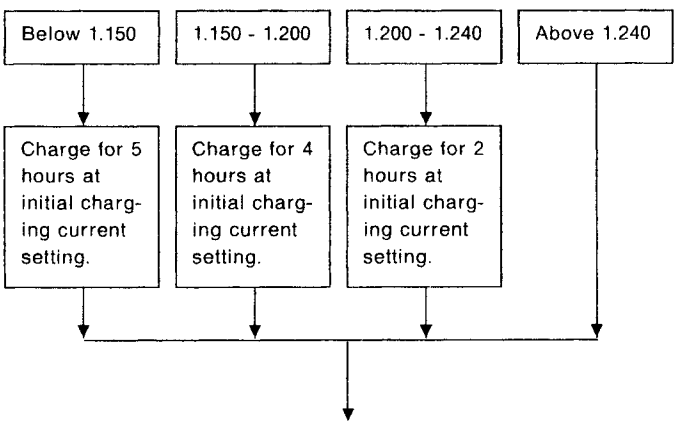

CAUTION:

- **Set charging current to value specified in Fig. 2. If charger is not capable of producing specified current value, set its charging current as close to that value as possible.**
- **Keep battery away from open flame while it is being charged.**
- **When connecting charger, connect leads first, then turn on charger. Do not turn on charger first, as this may cause a spark.**
- **If battery temperature rises above 60°C (140°F), stop charging. Always charge battery when its temperature is below 60°C (140°F).**

Simpo PDF Merge and Split Unregistered Version - http://www.simpopdf.com

Battery Test and Charging Chart (Cont'd)

B: STANDARD CHARGE

Determine initial charging current from specific gravity, referring to Fig. 4.

↓

Charge battery for 8 hours.

↓

CHECKING SPECIFIC GRAVITY
Refer to "Specific Gravity Check".

↓

Conduct additional charge as per Fig. 5, if necessary.

↓

Go to "CAPACITY TEST".

Fig. 4 INITIAL CHARGING CURRENT SETTING
(Standard charge)

CONVERTED SPECIFIC GRAVITY	BATTERY TYPE										
	28B19R(L)	34B19R(L)	46B24R(L)	55B24R(L)	50D23R(L)	55D23R(L)	65D26R(L)	80D26R(L)	75D31R(L)	95D31R(L)	115D31R(L)	95E41R(L)	130E41R(L)
1.100 - 1.130	4.0 (A)		5.0 (A)		6.0 (A)		7.0 (A)		8.0 (A)	9.0 (A)			13.0 (A)
1.130 - 1.160	3.0 (A)		4.0 (A)		5.0 (A)		6.0 (A)		7.0 (A)	8.0 (A)			11.0 (A)
1.160 - 1.190	2.0 (A)		3.0 (A)		4.0 (A)		5.0 (A)		6.0 (A)	7.0 (A)			9.0 (A)
1.190 - 1.220	2.0 (A)		2.0 (A)		3.0 (A)		4.0 (A)		5.0 (A)	5.0 (A)			7.0 (A)

- Check battery type and determine the specified current using the table shown above.
- After starting charging, adjustment of charging current is not necessary.

Fig. 5 ADDITIONAL CHARGE (Standard charge)

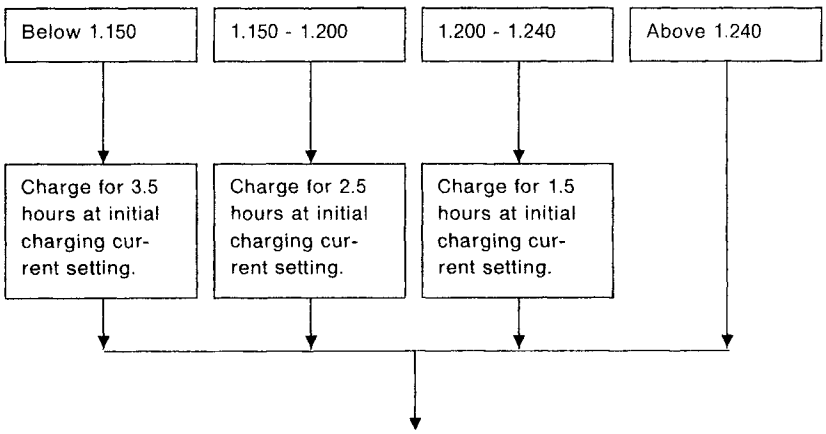

CAUTION:

- **Do not use standard charge method on a battery whose specific gravity is less than 1.100.**
- **Set charging current to value specified in Fig. 4. If charger is not capable of producing specified current value, set its charging current as close to that value as possible.**
- **Keep battery away from open flame while it is being charged.**
- **When connecting charger, connect leads first, then turn on charger. Do not turn on charger first, as this may cause a spark.**
- **If battery temperature rises above 60°C (140°F), stop charging. Always charge battery when its temperature is below 60°C (140°F).**

Simpo PDF Merge and Split Unregistered Version - http://www.simpopdf.com

Battery Test and Charging Chart (Cont'd)

C: QUICK CHARGE

Determine initial charging current setting and charging time from specific gravity, referring to Fig. 6.

↓

Charge battery.

↓

Go to "CAPACITY TEST".

Fig. 6 INITIAL CHARGING CURRENT SETTING AND CHARGING TIME (Quick charge)

BATTERY TYPE		28B19R(L) 34B19R(L)	46B24R(L) 55B24R(L) 50D23R(L)	55D23R(L) 65D26R(L) 80D26R(L)	75D31R(L) 95D31R(L) 115D31R(L) 95E41R(L)	130E41R(L)
CURRENT [A]		10 (A)	15 (A)	20 (A)	30 (A)	40 (A)
CONVERTED SPECIFIC GRAVITY	1.100 - 1.130	2.5 hours				
	1.130 - 1.160	2.0 hours				
	1.160 - 1.190	1.5 hours				
	1.190 - 1.220	1.0 hours				
	Above 1.220	0.75 hours (45 min.)				

- Check battery type and determine the specified current using the table shown above.
- After starting charging, adjustment of charging current is not necessary.

CAUTION:

- **Do not use quick charge method on a battery whose specific gravity is less than 1.100.**
- **Set initial charging current to value specified in Fig. 6. If charger is not capable of producing specified current value, set its charging current as close to that value as possible.**
- **Keep battery away from open flame while it is being charged.**
- **When connecting charger, connect leads first, then turn on charger. Do not turn on charger first, as this may cause a spark.**
- **Be careful of a rise in battery temperature because a large current flow is required during quick-charge operation.**
  If battery temperature rises above 60°C (140°F), stop charging. Always charge battery when its temperature is below 60°C (140°F).
- **Do not exceed the charging time specified in Fig. 6, because charging battery over the charging time can cause deterioration of the battery.**

Service Data and Specifications (SDS)

Applied model		GA engines			CD20	SR20DE
Type		28B19L	55D23L	65D26L	95D31L	34B19L
Capacity	V-AH	12 - 30	12 - 60	12 - 65	12 - 80	12 - 33

Simpo PDF Merge and Split Unregistered Version - http://www.simpopdf.com

Wiring Diagram — START —

M/T MODELS

EL-START-01

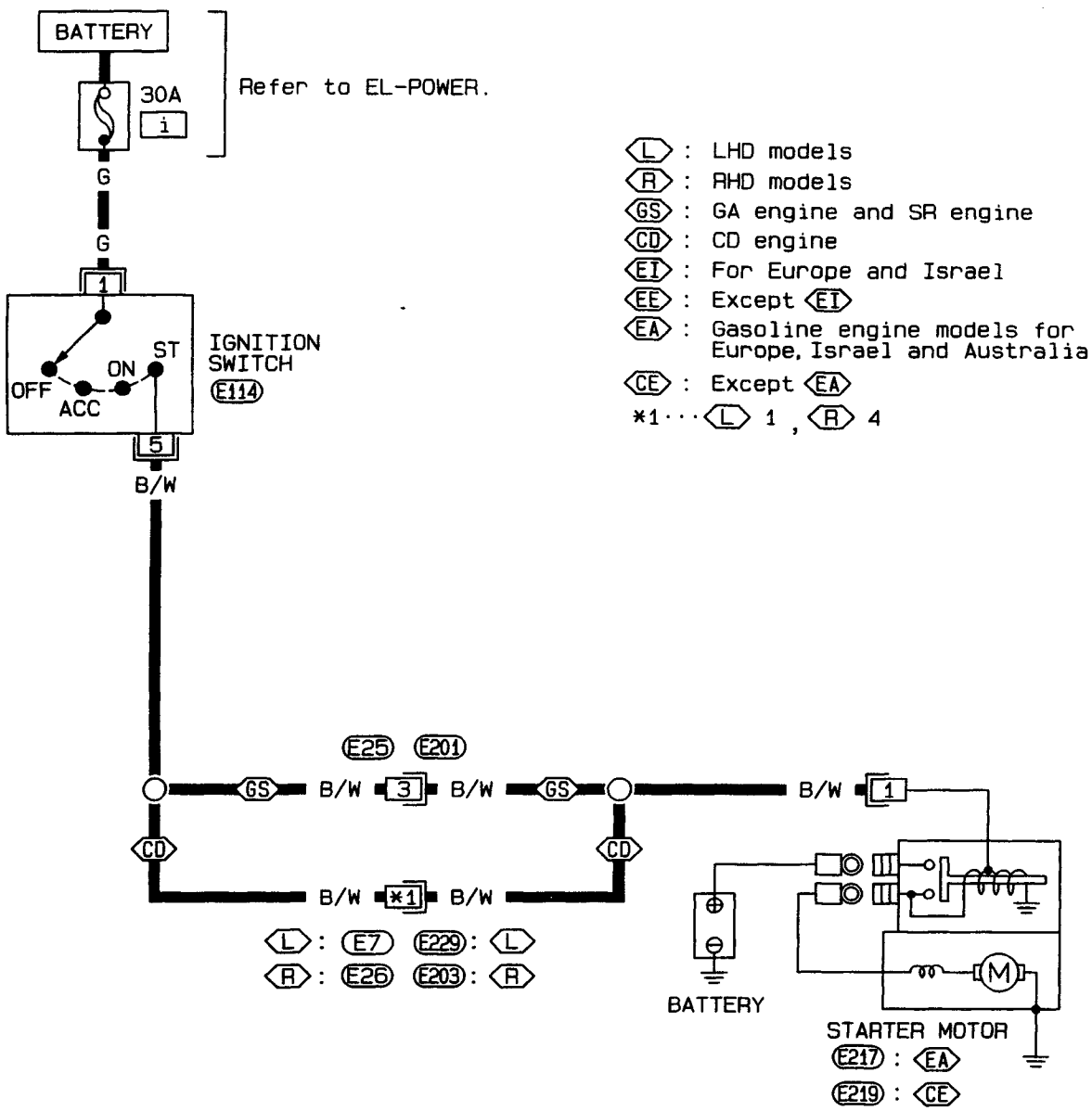

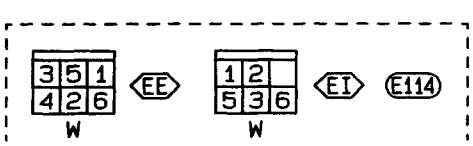

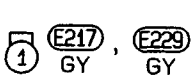

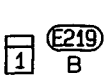

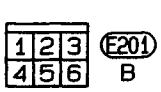

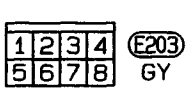

HEL194

Simpo PDF Merge and Split Unregistered Version - http://www.simpopdf.com

Wiring Diagram — START — (Cont'd)

A/T MODELS

EL-START-02

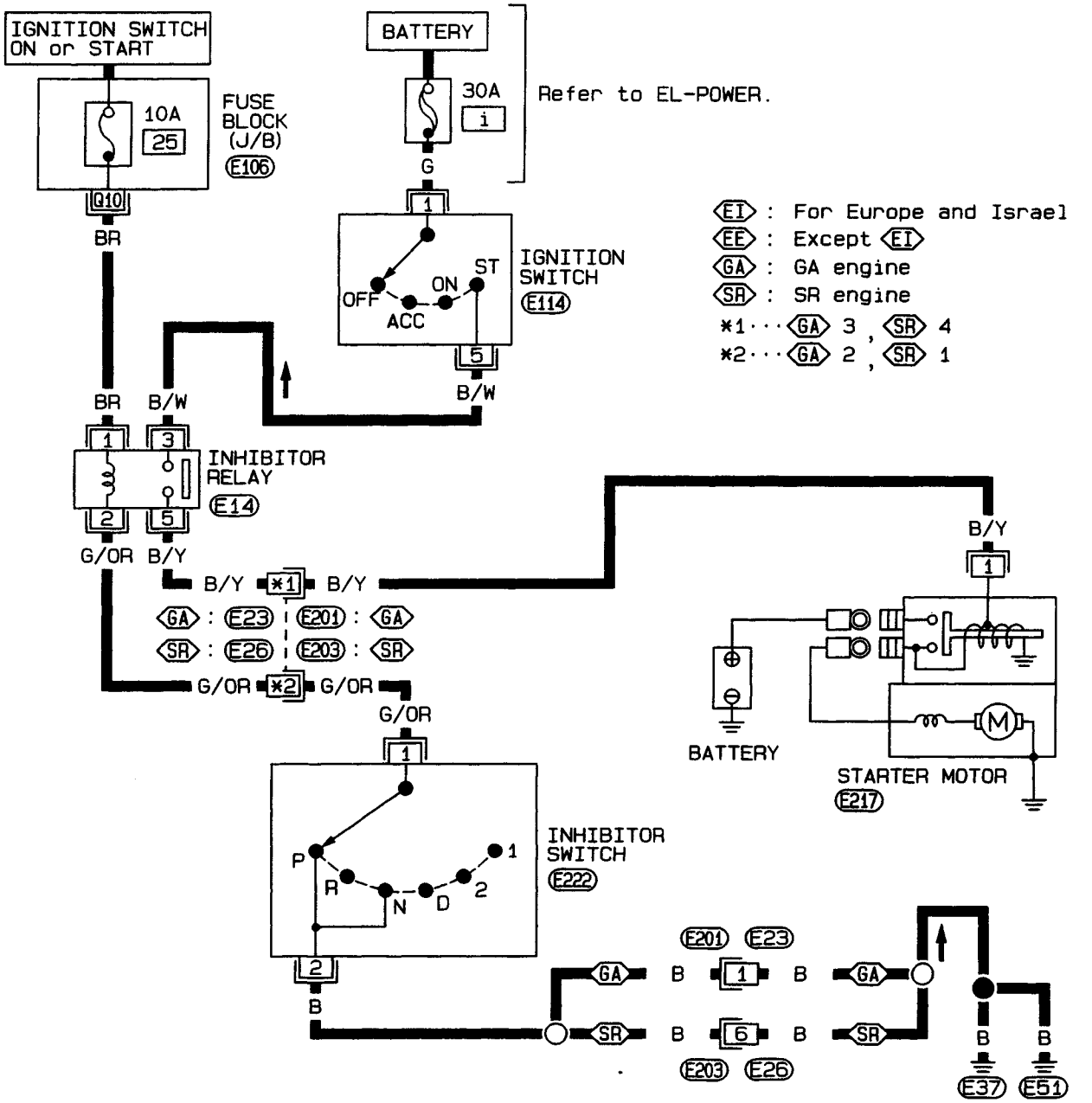

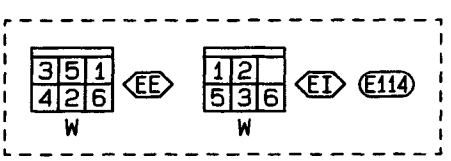

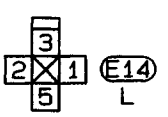

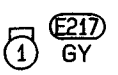

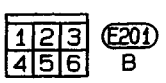

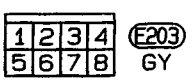

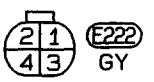

Refer to last page (Foldout page).

E106

HEL195

Simpo PDF Merge and Split Unregistered Version - http://www.simpopdf.com

Trouble Diagnoses

If any abnormality is found, immediately disconnect battery negative terminal.

Starter does not stop. → Replace magnetic switch.

Engine does not start.

Does engine turn by cranking?
- Yes → Does engine turn normally?
  - Yes → Check ignition/fuel system.
  - No (Turns slowly.) → Check battery as follows:
    - Charging condition
    - Terminal connections
    - Terminal corrosion
    - OK → Repair starter motor.
    - NG → Ⓐ
- No → Does starter motor turn?
  - Yes → Does gear shaft turn?
    - Yes → Check pinion clutch.
    - No → Check reduction gear, armature and gear shaft.
  - No → Check fuse and fusible link.
    - NG → Replace.
    - OK → Check battery as follows:
      - Charging condition
      - Terminal connections
      - Terminal corrosion
      - NG → Ⓐ
        - Charge battery.
        - Repair connections and corrosion of battery terminals.
      - OK → Check starting system wiring.
        - NG → Repair.
        - OK → Does magnetic switch operation sound occur?
          - No → Replace magnetic switch
          - Yes → Check condition of pinion and ring gear mesh.
            - NG
              - Adjust pinion movement.
              - Check pinion moving mechanism.
              - Check ring gear.
            - OK → Does starter turn under no load by connecting wires as follows?

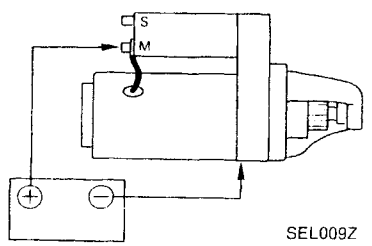

- Yes → Replace magnetic switch.
- No → Repair starter motor.

EL

Simpo PDF Merge and Split Unregistered Version - http://www.simpopdf.com

Construction

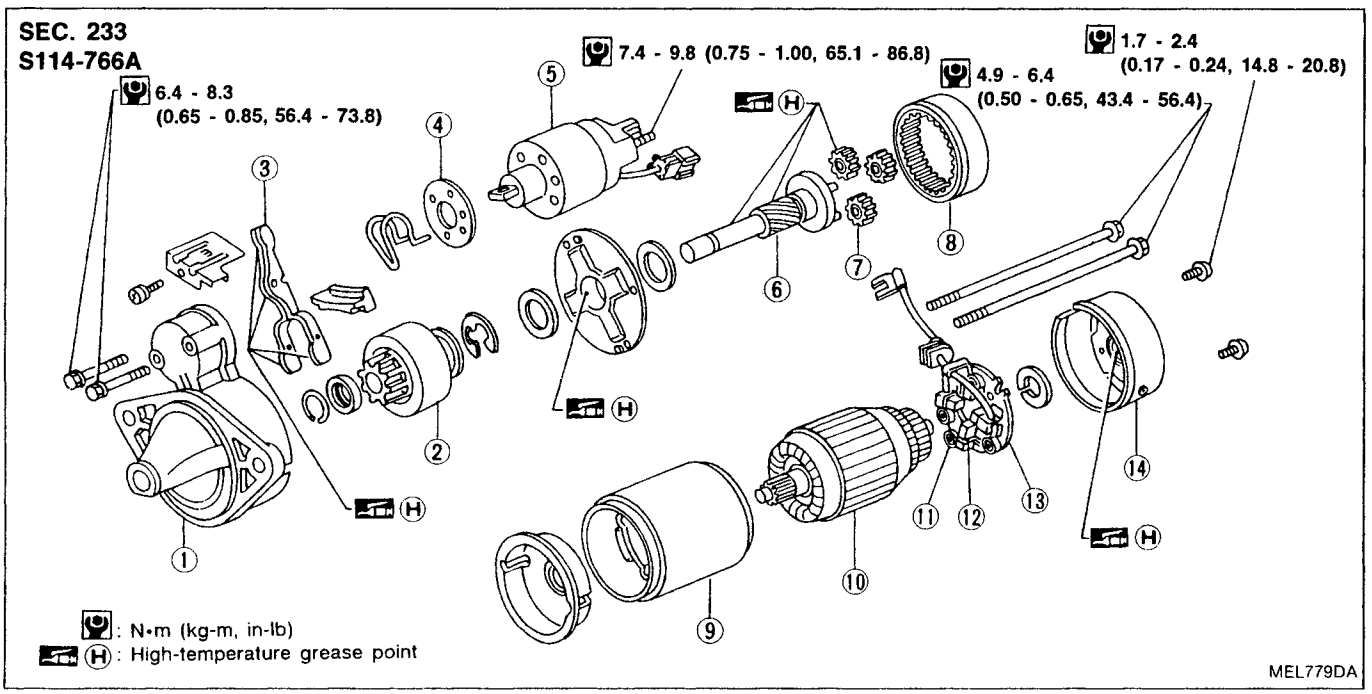

①	Gear case	⑥	Pinion shaft	⑪	Brush spring
②	Pinion assembly	⑦	Planetary gear	⑫	Brush (–)
③	Shift lever	⑧	Internal gear	⑬	Brush holder
④	Adjusting plate	⑨	Yoke	⑭	Rear cover
⑤	Magnetic switch assembly	⑩	Armature		

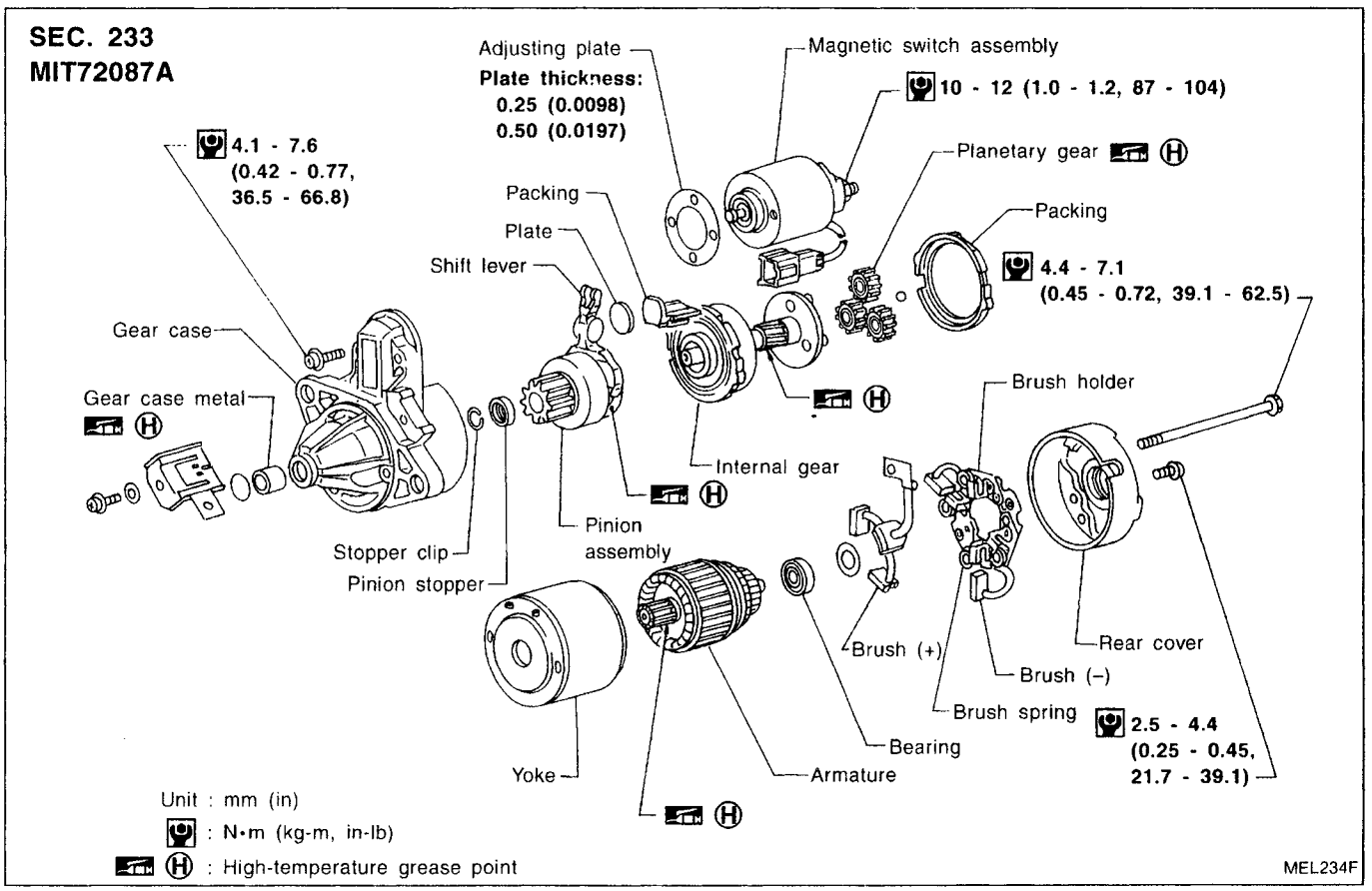

Simpo PDF Merge and Split Unregistered Version - http://www.simpopdf.com

Construction (Cont'd)

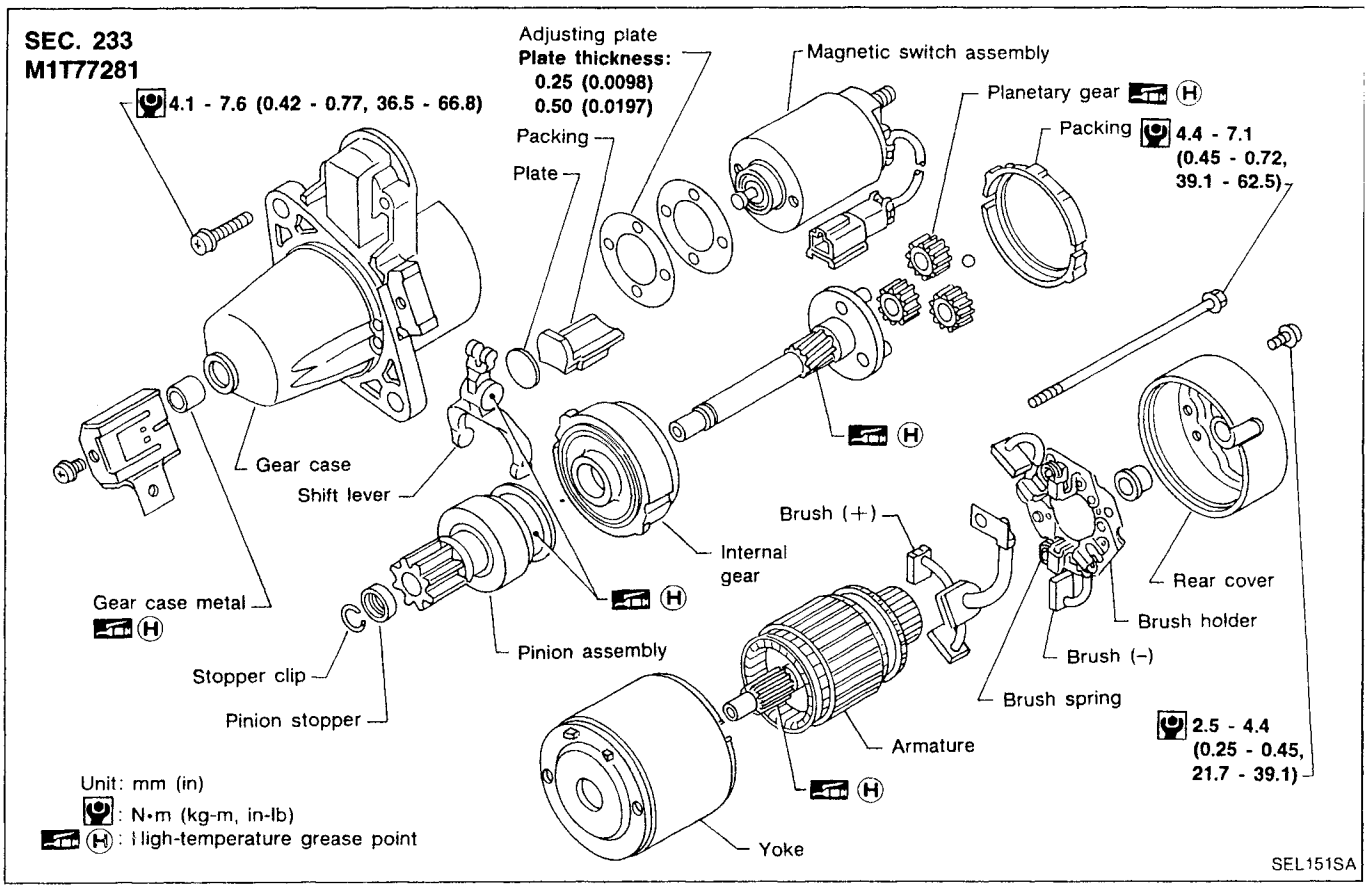

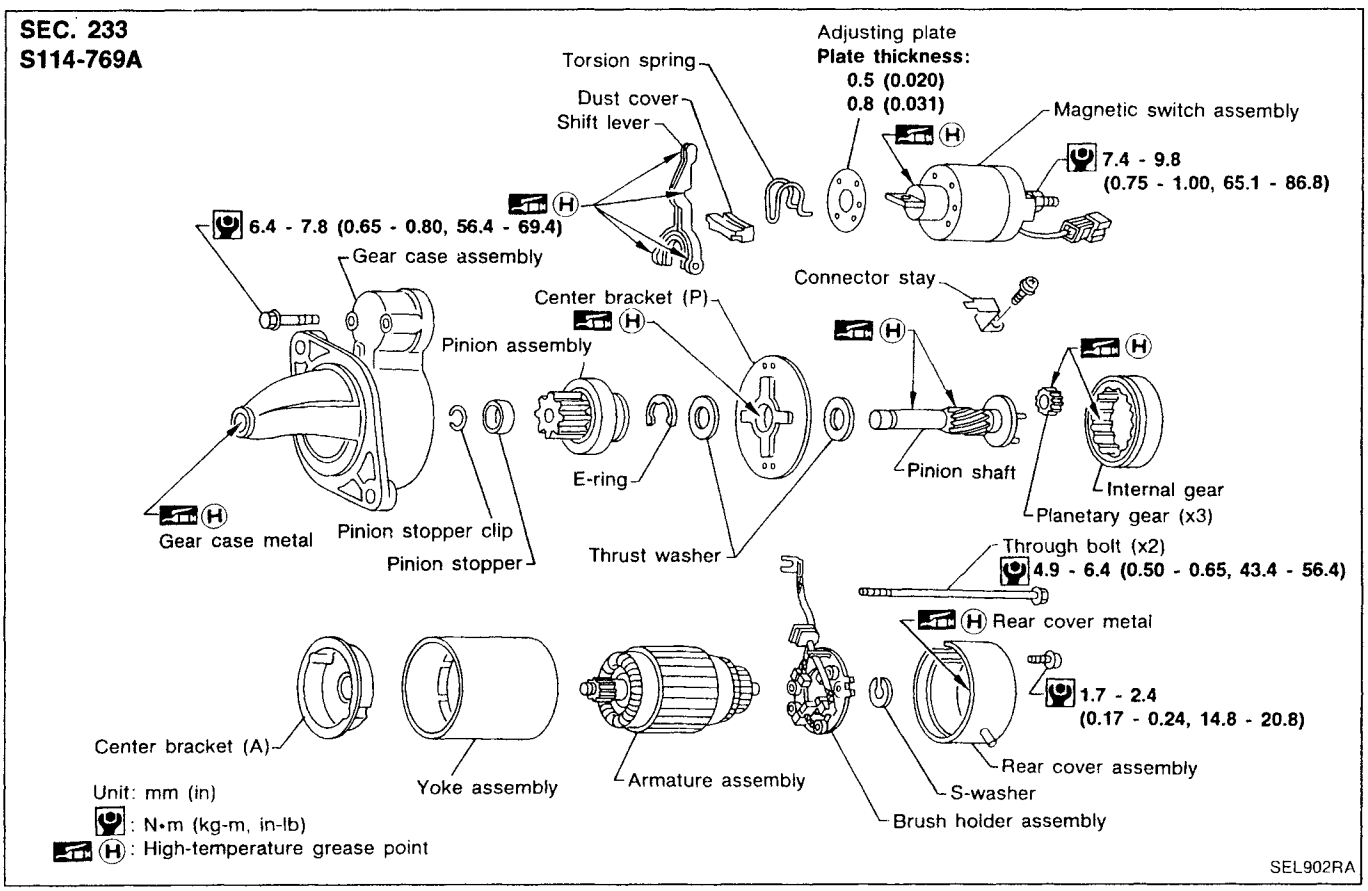

EL

Simpo PDF Merge and Split Unregistered Version - http://www.simpopdf.com

Construction (Cont'd)

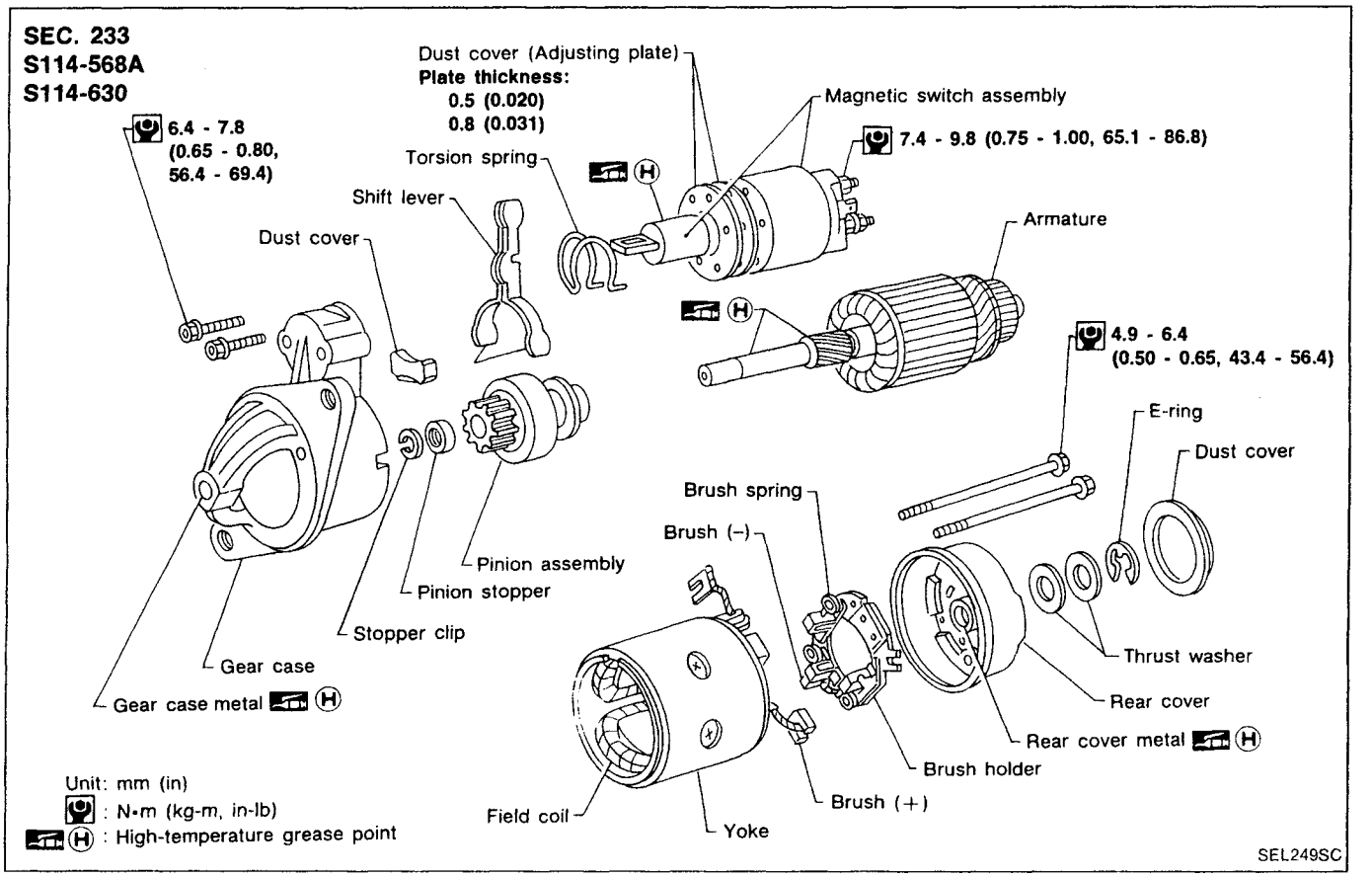

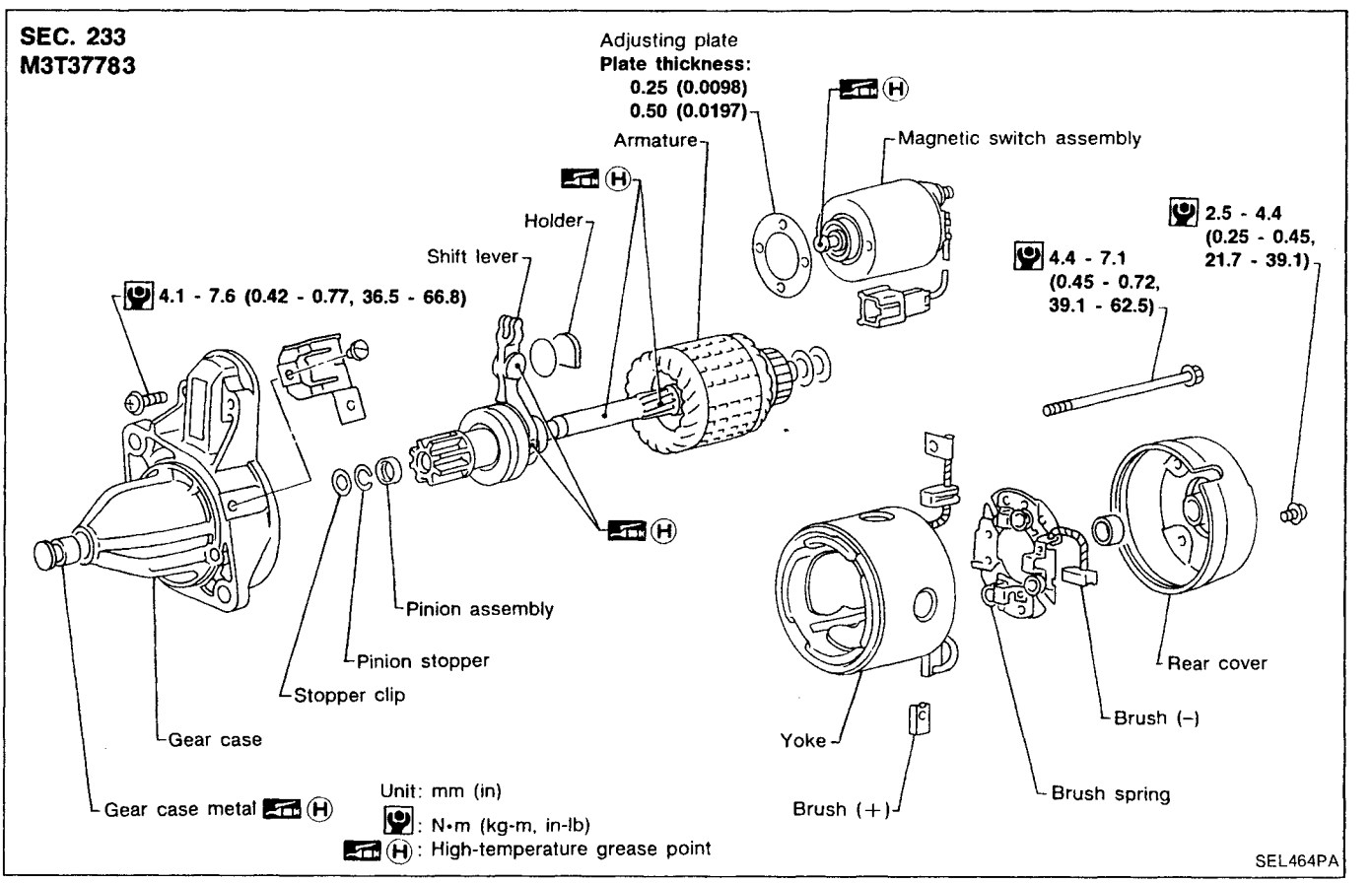

Simpo PDF Merge and Split Unregistered Version - http://www.simpopdf.com

Construction (Cont'd)

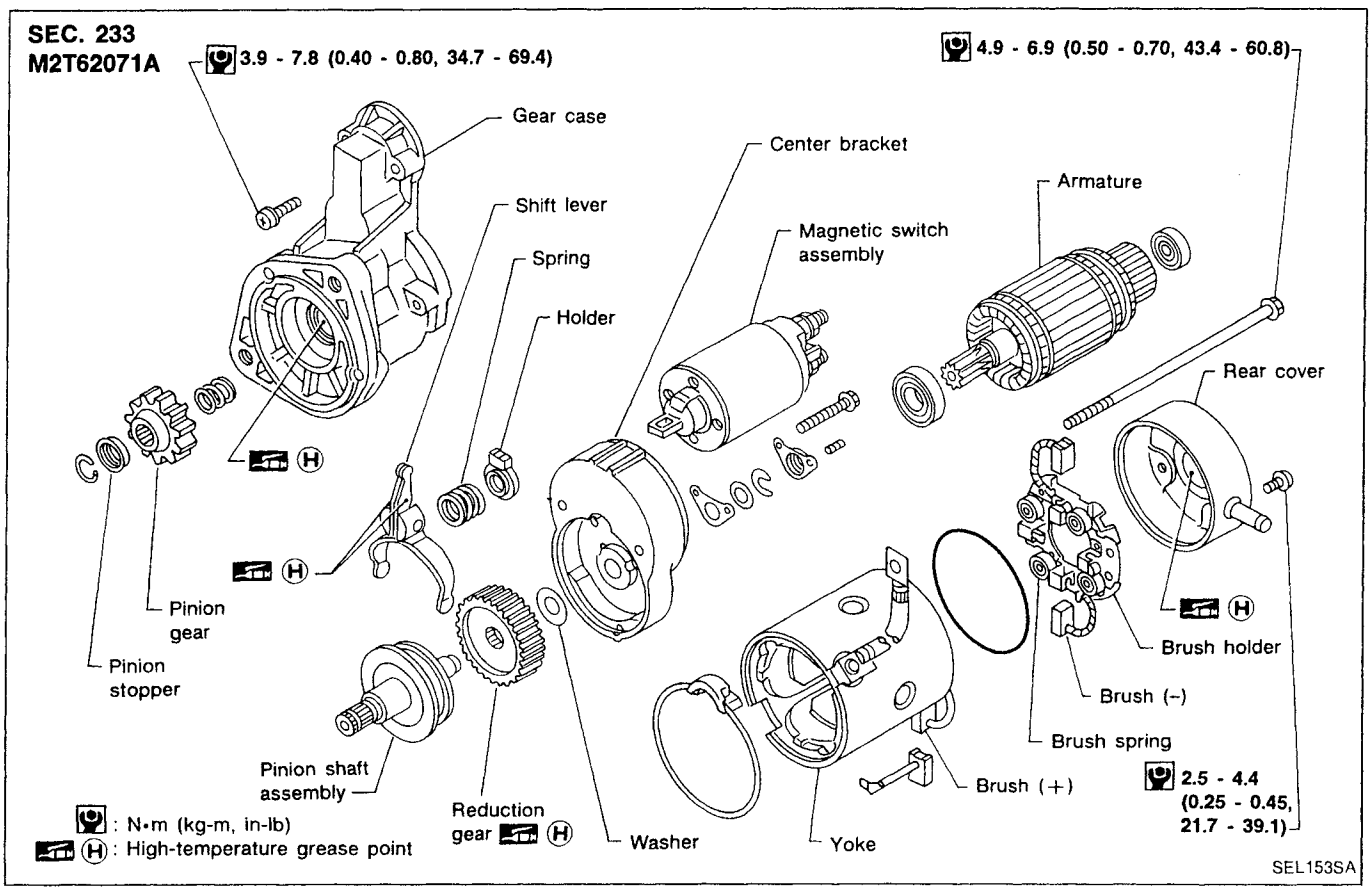

Simpo PDF Merge and Split Unregistered Version - http://www.simpopdf.com

Construction (Cont'd)

SEC. 233
S13-305
S13-331

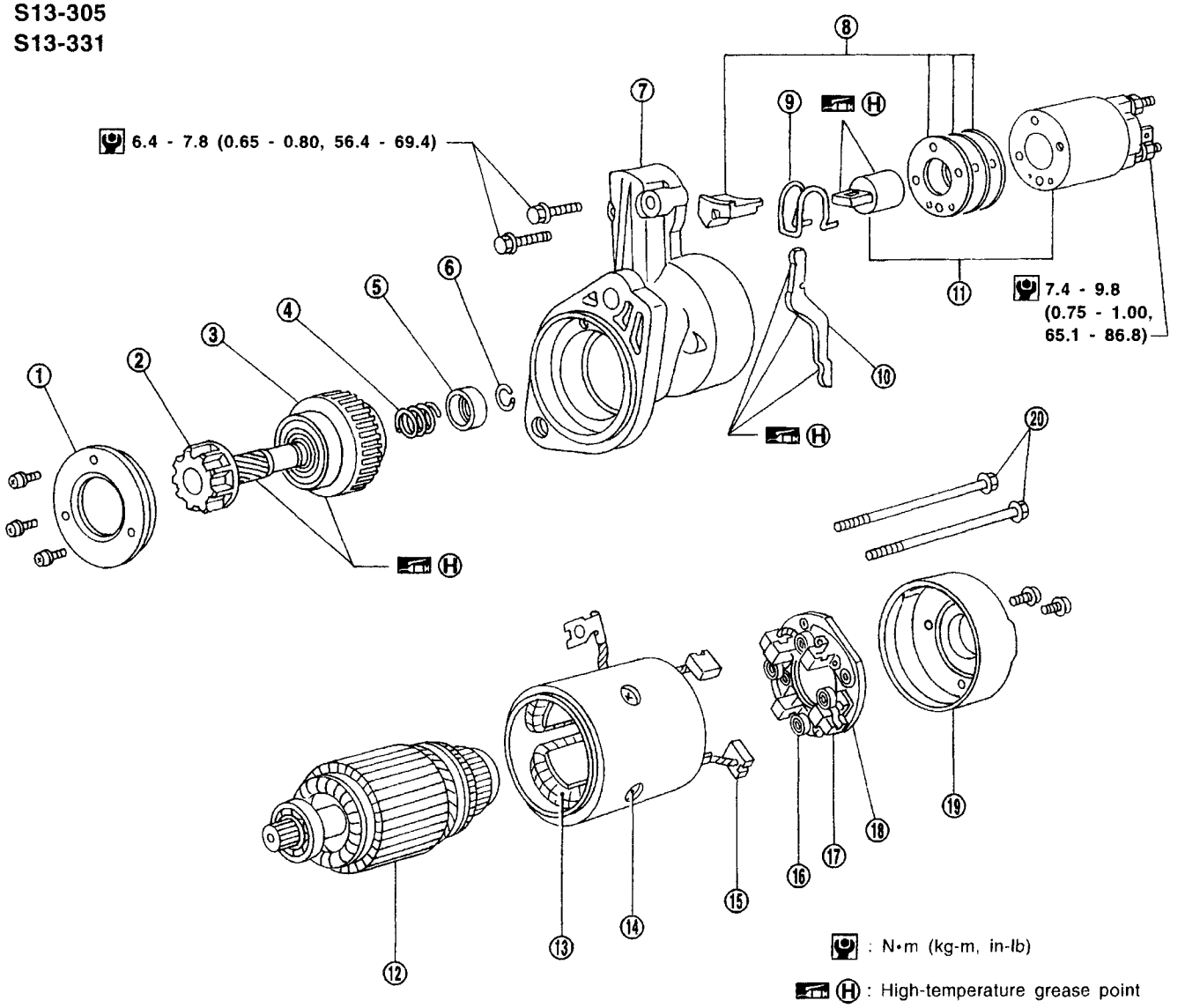

MEL233F

① Bearing retainer
② Pinion shaft
③ Clutch assembly
④ Return spring
⑤ Pinion stopper
⑥ Stopper clip
⑦ Gear case
⑧ Dust cover
⑨ Torsion spring
⑩ Shift lever
⑪ Magnetic switch assembly
⑫ Armature assembly
⑬ Field coil
⑭ Yoke
⑮ Brush (+)
⑯ Brush spring
⑰ Brush (–)
⑱ Brush holder
⑲ Rear cover
⑳ Through-bolt

Simpo PDF Merge and Split Unregistered Version - http://www.simpopdf.com

Construction (Cont'd)

SEC. 233
M2T61871A

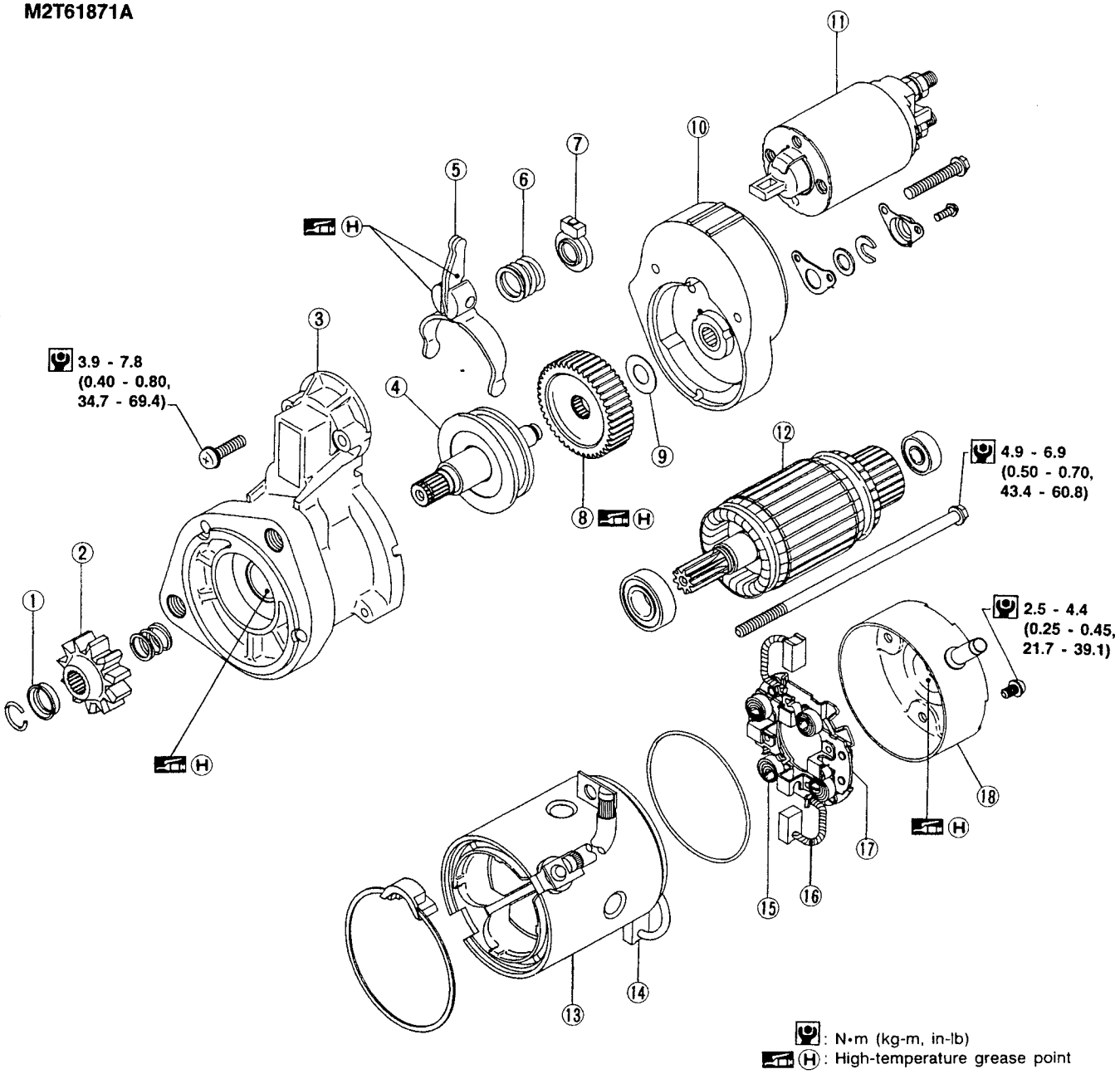

SEL554PA

①	Pinion stopper	⑦	Holder	⑬	Yoke
②	Pinion assembly	⑧	Reduction gear	⑭	Brush (+)
③	Gear case	⑨	Washer	⑮	Brush spring
④	Pinion shaft assembly	⑩	Center bracket	⑯	Brush (–)
⑤	Shift lever	⑪	Magnetic switch assembly	⑰	Brush holder
⑥	Spring	⑫	Armature	⑱	Rear cover

EL

Simpo PDF Merge and Split Unregistered Version - http://www.simpopdf.com

Construction (Cont'd)

SEC. 233
M1T72985A

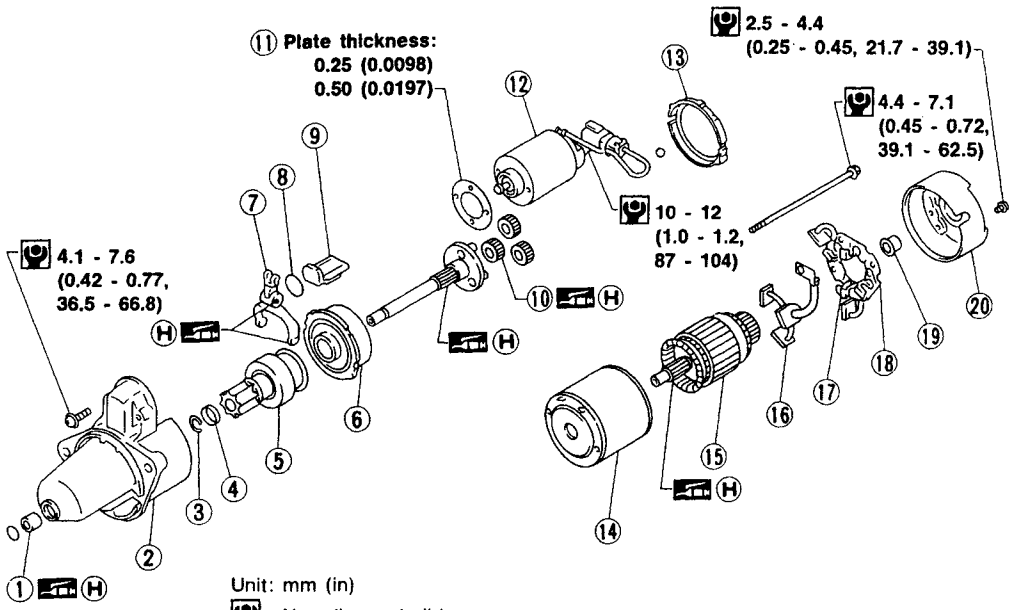

SEL663QA

① Sleeve bearing
② Gear case
③ Stopper clip
④ Pinion stopper
⑤ Pinion assembly
⑥ Internal gear
⑦ Shift lever
⑧ Plate
⑨ Packing
⑩ Planetary gear
⑪ Adjusting plate
⑫ Magnetic switch assembly
⑬ Packing
⑭ Yoke
⑮ Armature
⑯ Bush (+)
⑰ Brush spring
⑱ Brush holder
⑲ Bearing
⑳ Rear cover

SEC. 233
S114-806

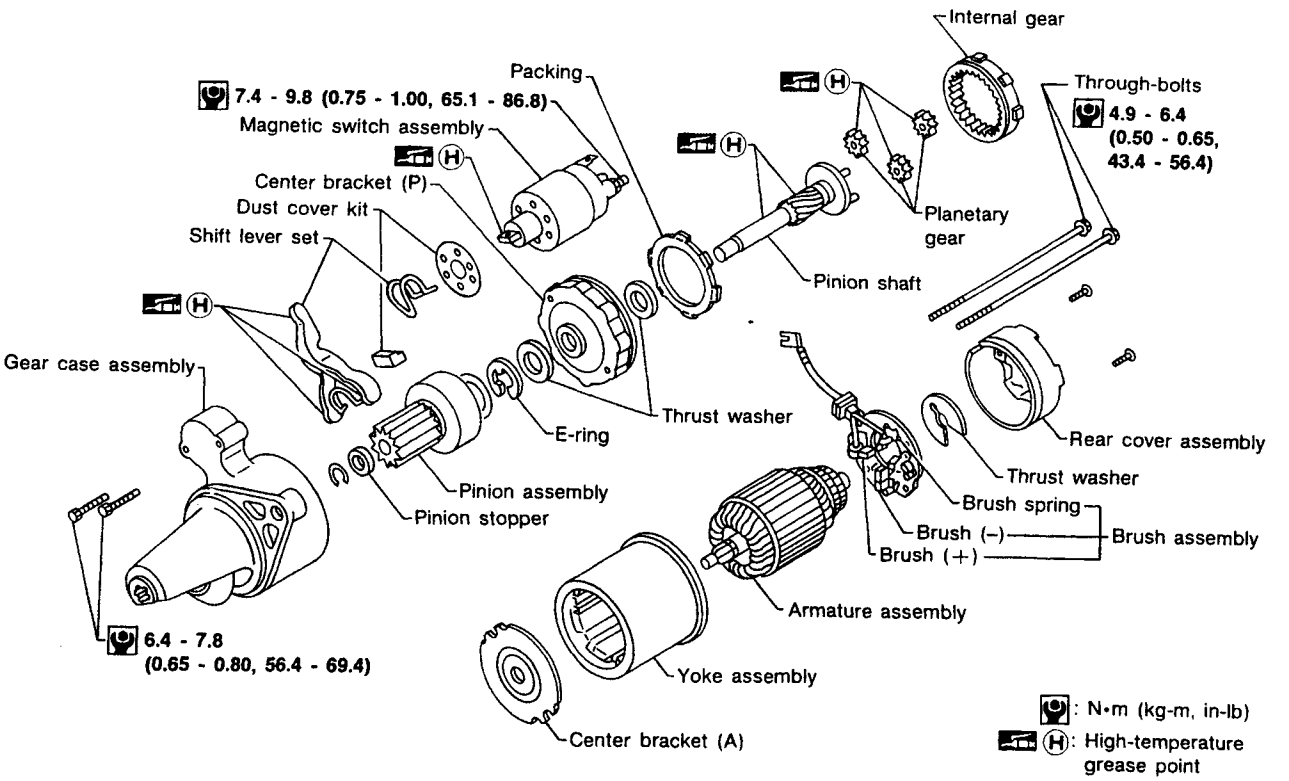

MEL675EA

Simpo PDF Merge and Split Unregistered Version - http://www.simpopdf.com

Construction (Cont'd)

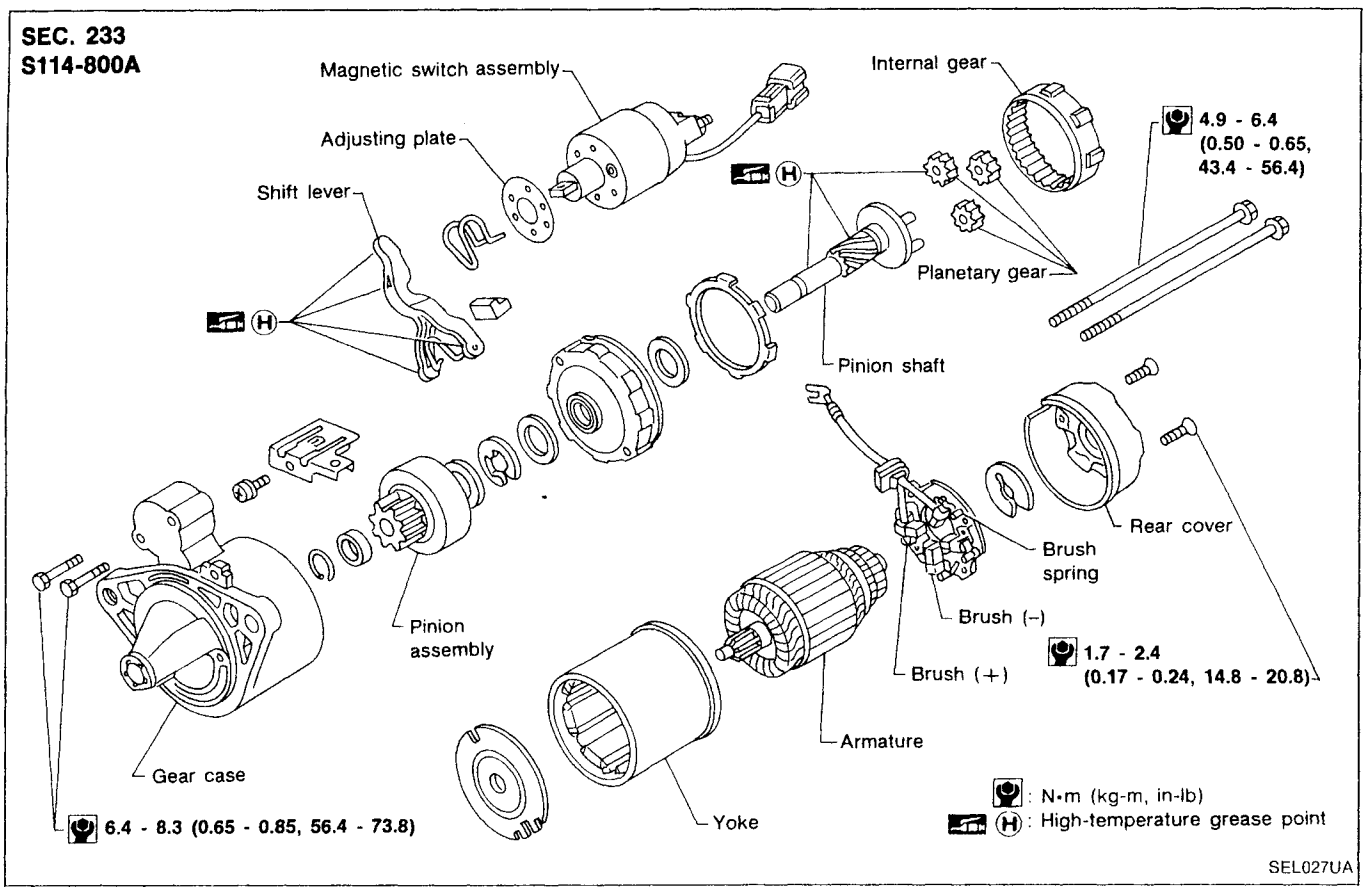

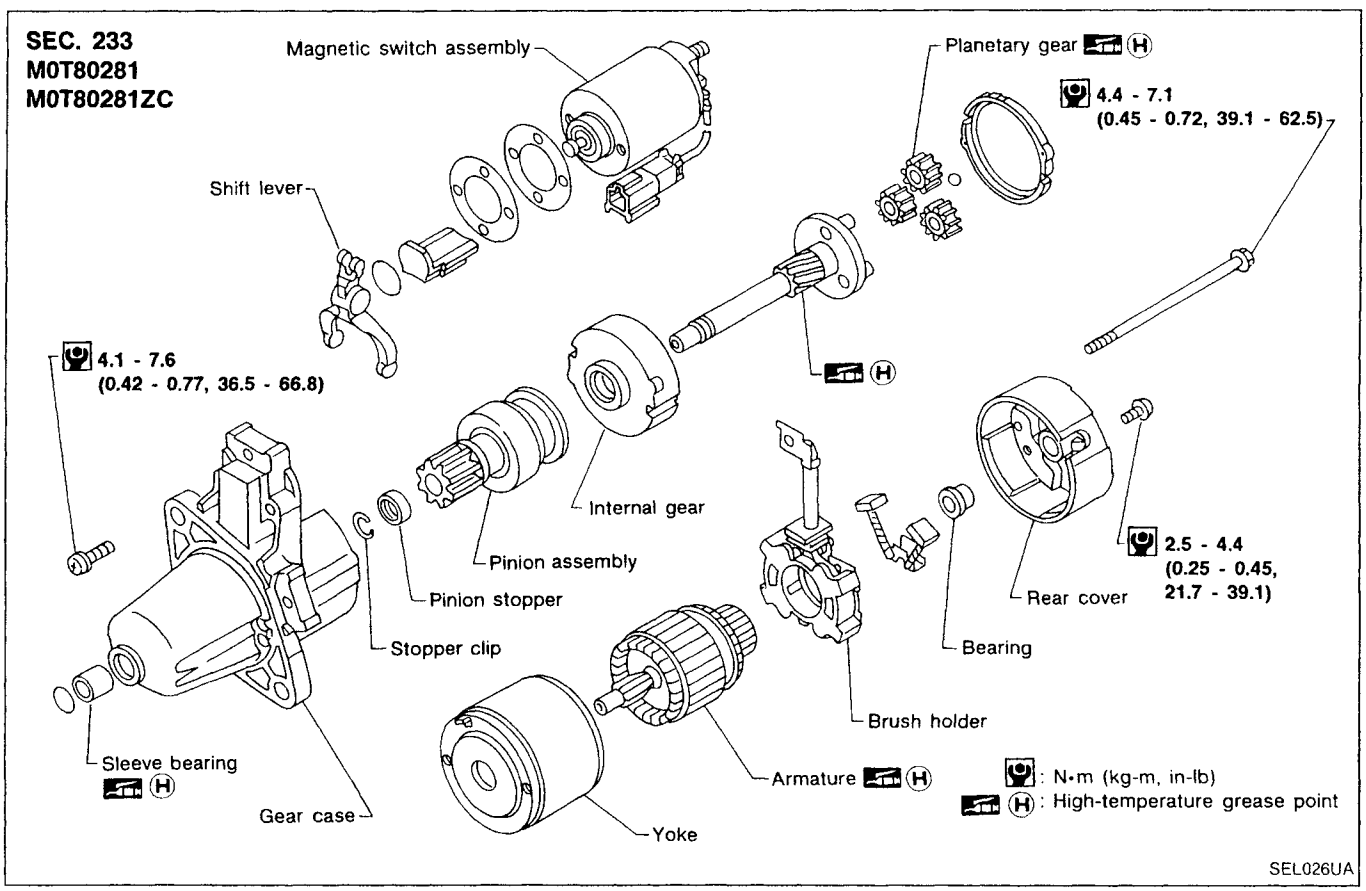

EL

Simpo PDF Merge and Split Unregistered Version - http://www.simpopdf.com

Construction (Cont'd)

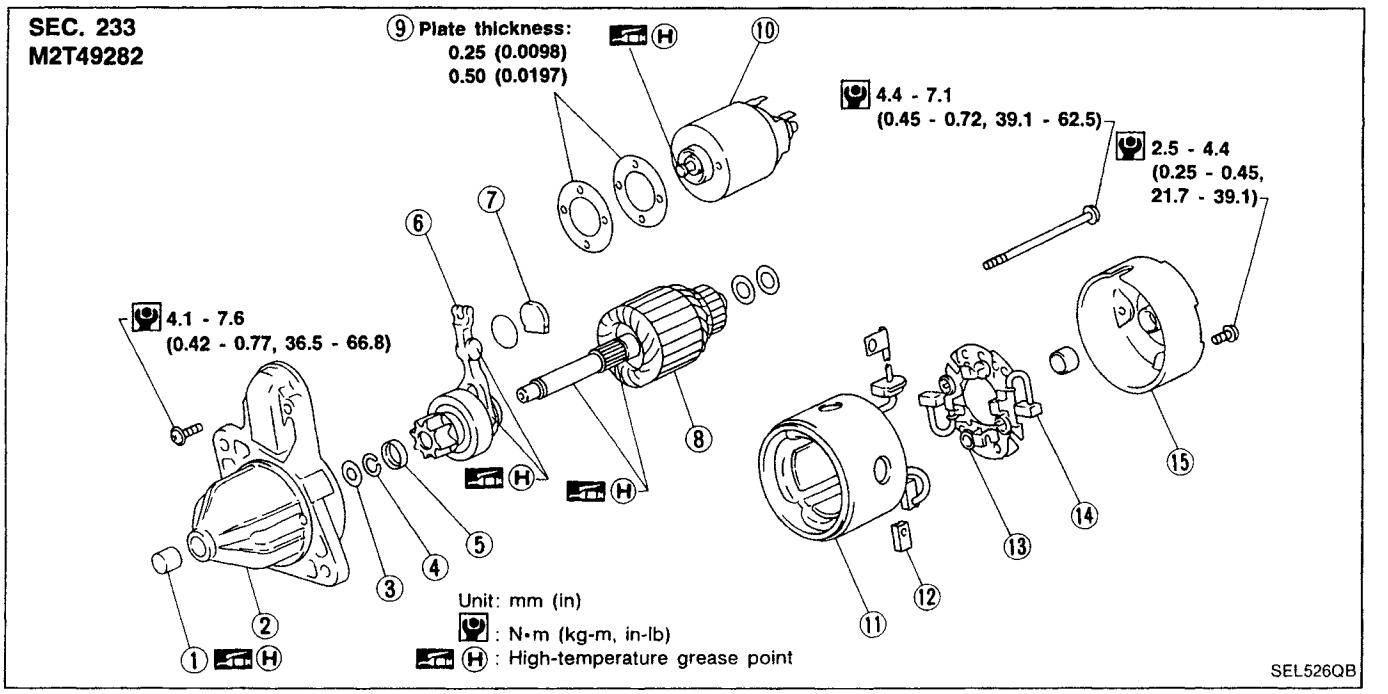

①	Gear case metal	⑥	Shift lever	⑪	Yoke
②	Gear case	⑦	Holder	⑫	Brush (+)
③	Stopper clip	⑧	Armature	⑬	Brush spring
④	Pinion stopper	⑨	Adjusting plate	⑭	Brush (–)
⑤	Pinion assembly	⑩	Magnetic switch assembly	⑮	Rear cover

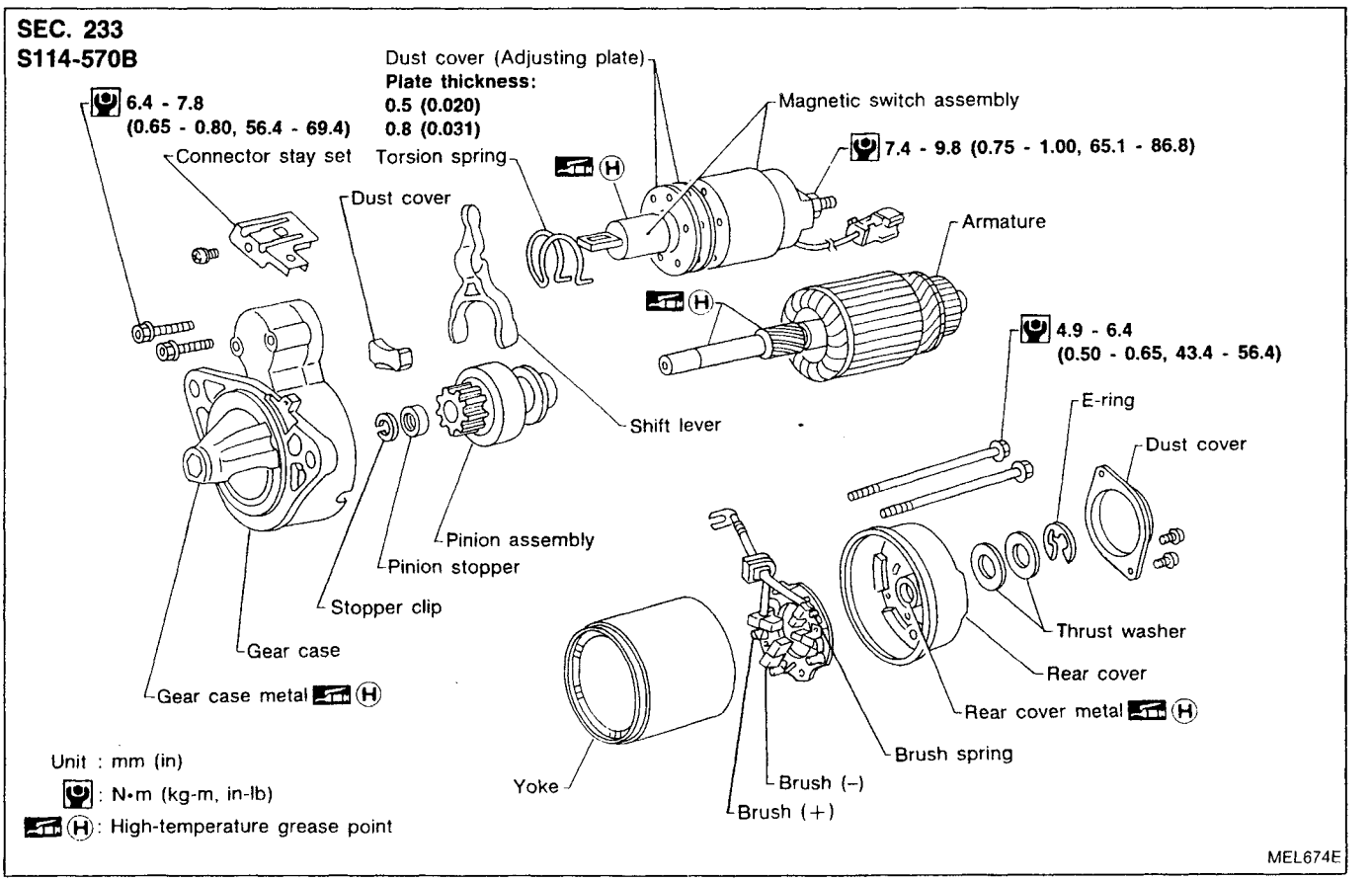

Simpo PDF Merge and Split Unregistered Version - http://www.simpopdf.com

Construction (Cont'd)

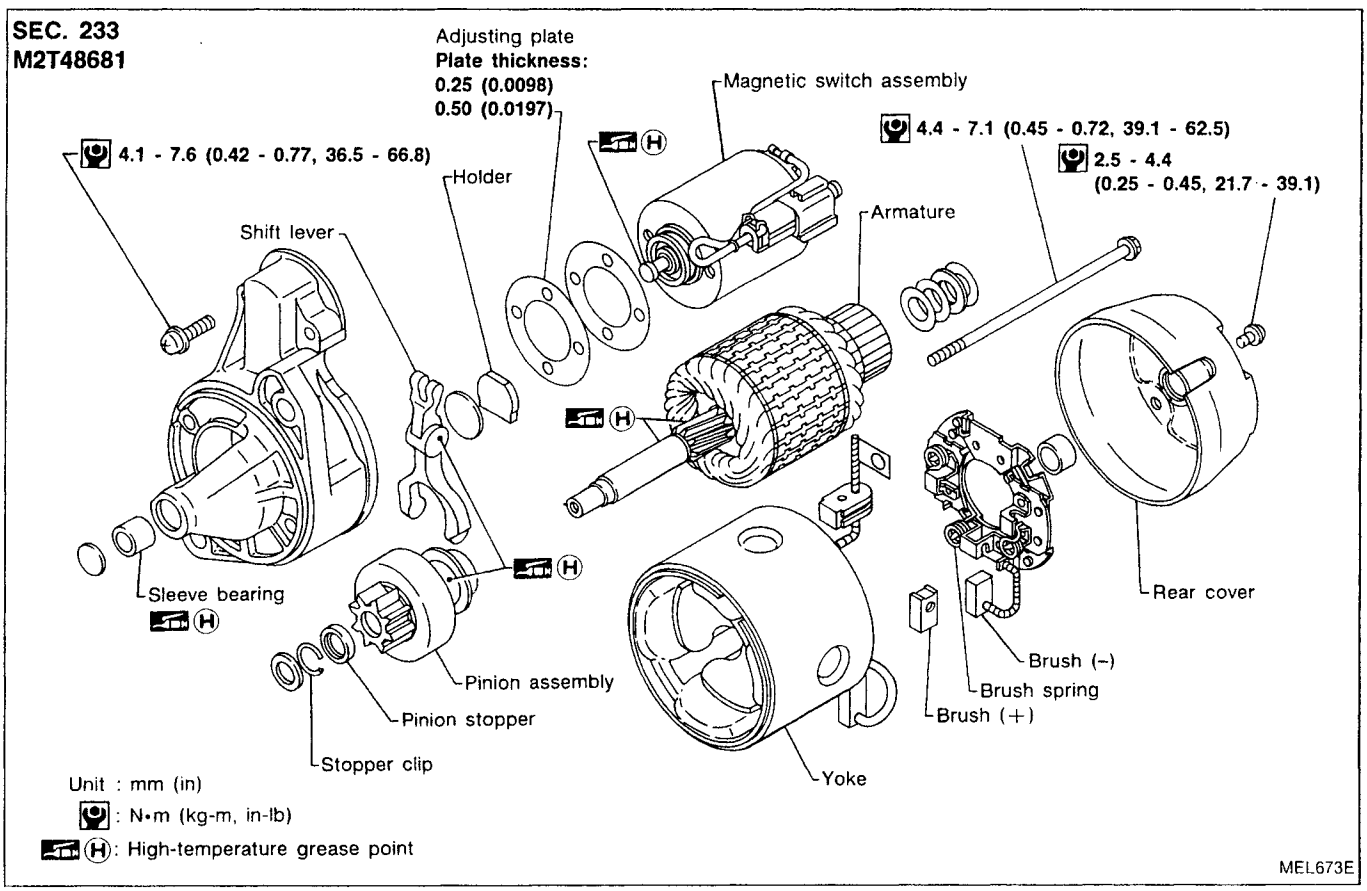

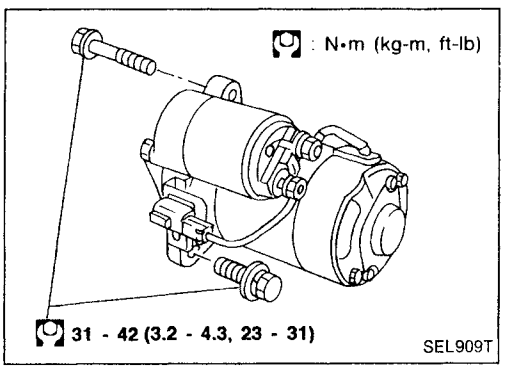

Removal and Installation

EL

Simpo PDF Merge and Split Unregistered Version - http://www.simpopdf.com

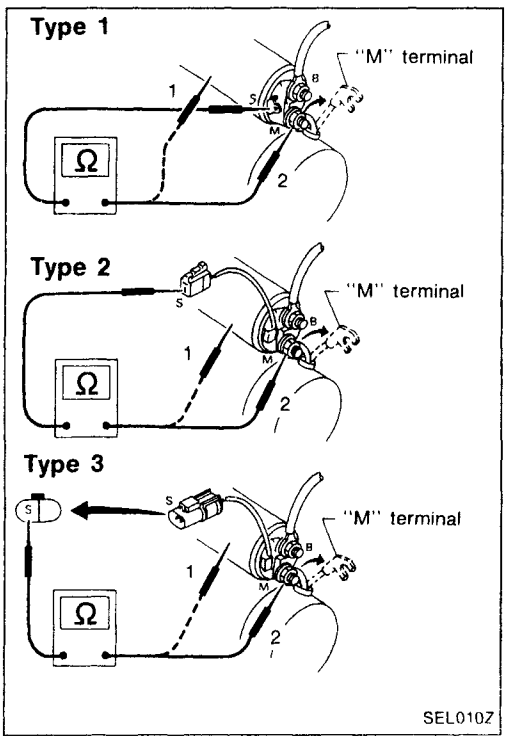

Magnetic Switch Check

- Before starting to check, disconnect battery ground cable.
- Disconnect "M" terminal of starter motor.

1. Continuity test (between "S" terminal and switch body).
- No continuity ... Replace.
2. Continuity test (between "S" terminal and "M" terminal).
- No continuity ... Replace.

Pinion/Clutch Check

1. Inspect pinion teeth.
- Replace pinion if teeth are worn or damaged. (Also check condition of ring gear teeth.)
2. Inspect reduction gear teeth.
- Replace reduction gear if teeth are worn or damaged. (Also check condition of armature shaft gear teeth.)
3. Check to see if pinion locks in one direction and rotates smoothly in the opposite direction.
- If it locks or rotates in both directions, or unusual resistance is evident. ... Replace.

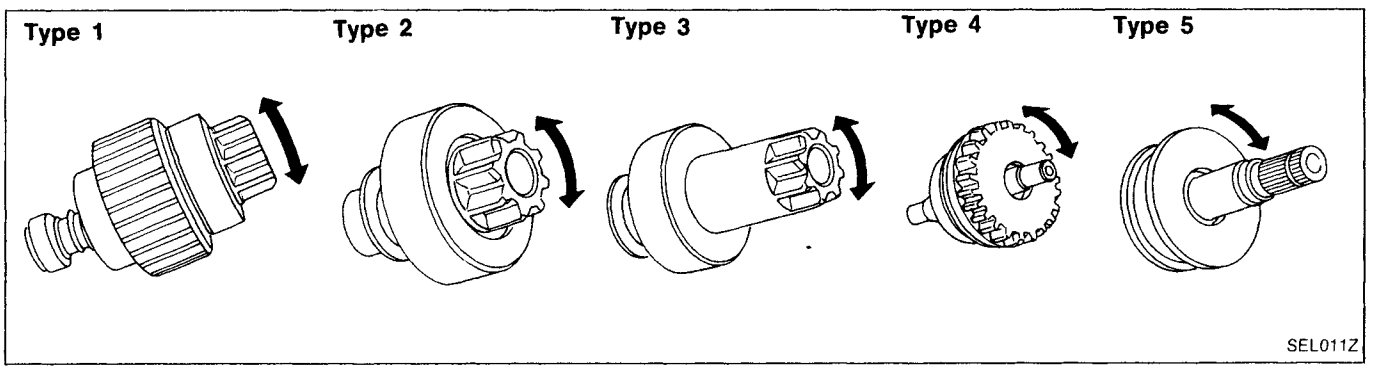

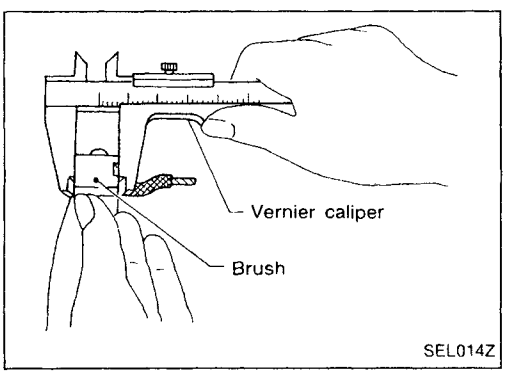

Brush Check

BRUSH

Check wear of brush.

Wear limit length:

Refer to SDS (EL-50).

- Excessive wear ... Replace.

Simpo PDF Merge and Split Unregistered Version - http://www.simpopdf.com

Brush Check (Cont'd)

BRUSH SPRING PRESSURE

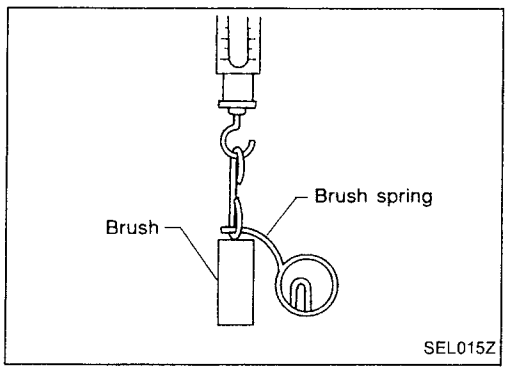

Check brush spring pressure with brush spring detached from brush.

Spring pressure (with new brush):
Refer to SDS (EL-50).

- Not within the specified values ... Replace.

BRUSH HOLDER

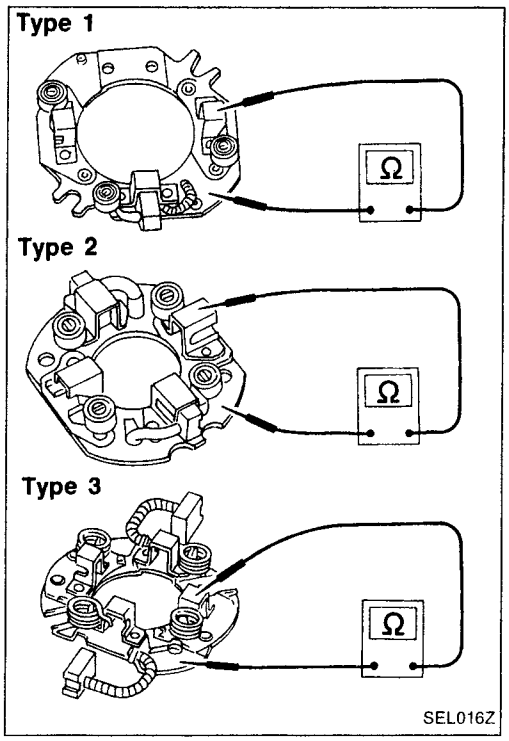

1. Perform insulation test between brush holder (positive side) and its base (negative side).
- Continuity exists. ... Replace.
2. Check brush to see if it moves smoothly.
- If brush holder is bent, replace it; if sliding surface is dirty, clean.

Yoke Check

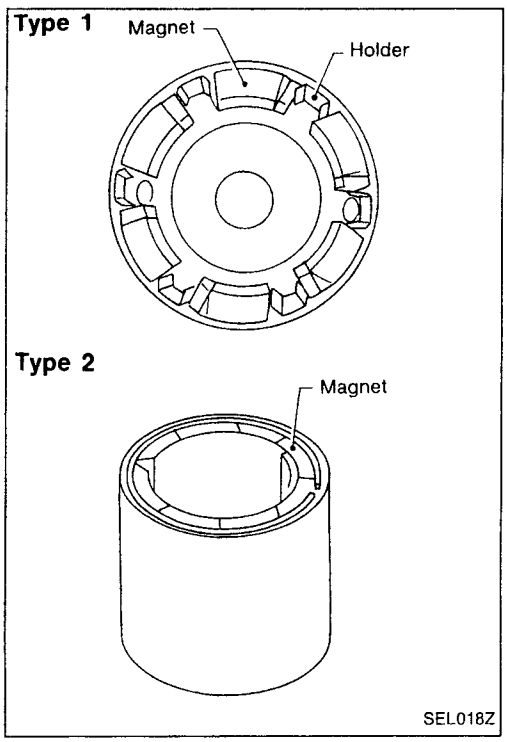

Magnet is secured to yoke by bonding agent. Check magnet to see that it is secured to yoke and for any cracks. Replace malfunctioning parts as an assembly.
Holder may move slightly as it is only inserted and not bonded.

CAUTION:
Do not clamp yoke in a vice or strike it with a hammer.

EL

Simpo PDF Merge and Split Unregistered Version - http://www.simpopdf.com

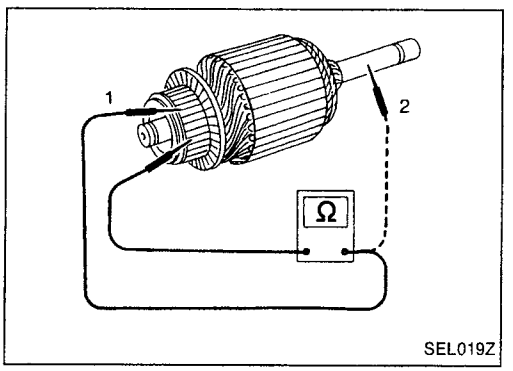

Armature Check

1. Continuity test (between two segments side by side).
- No continuity ... Replace.
2. Insulation test (between each commutator bar and shaft).
- Continuity exists. ... Replace.

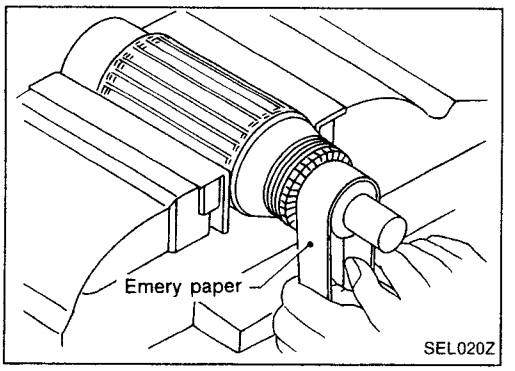

3. Check commutator surface.
- Rough ... Sand lightly with No. 500 - 600 emery paper.

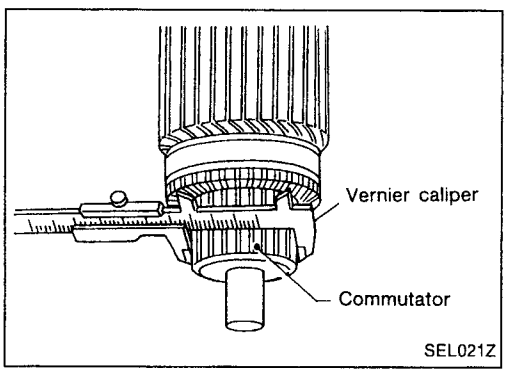

4. Check diameter of commutator.
   Commutator minimum diameter:
   Refer to SDS (EL-50).
- Less than specified value ... Replace.

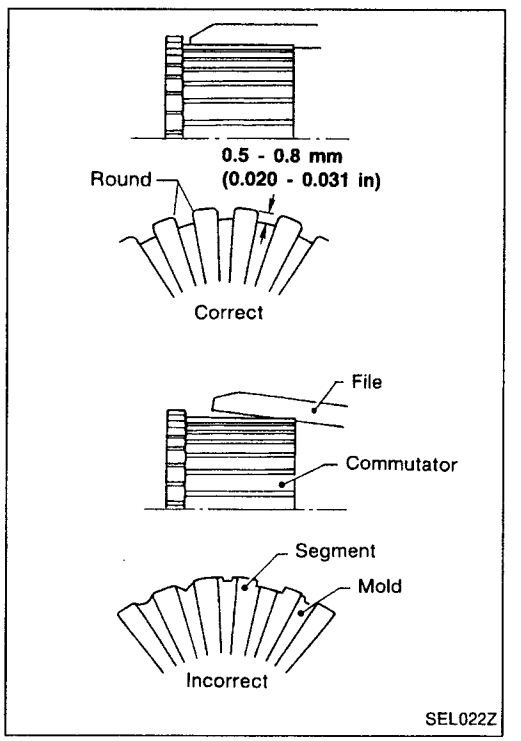

5. Check depth of insulating mold from commutator surface.
- Less than 0.2 mm (0.008 in) ... Undercut to 0.5 to 0.8 mm (0.020 to 0.031 in)

Simpo PDF Merge and Split Unregistered Version - http://www.simpopdf.com

Assembly

Apply high-temperature grease to lubricate the bearing, gears and frictional surface when assembling the starter.
Carefully observe the following instructions.

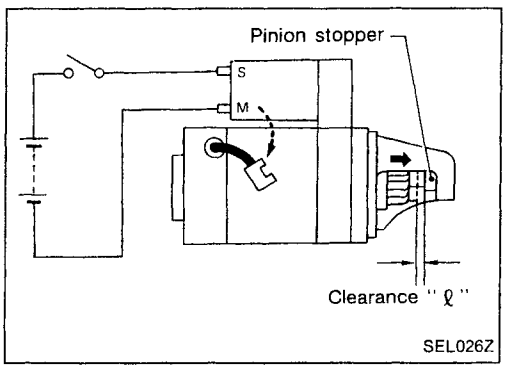

PINION PROTRUSION LENGTH ADJUSTMENT

With pinion driven out by magnetic switch, push pinion back to remove slack and measure clearance "ℓ" between the front edge of the pinion and the pinion stopper.

Clearance "ℓ":
Refer to SDS (EL-50).

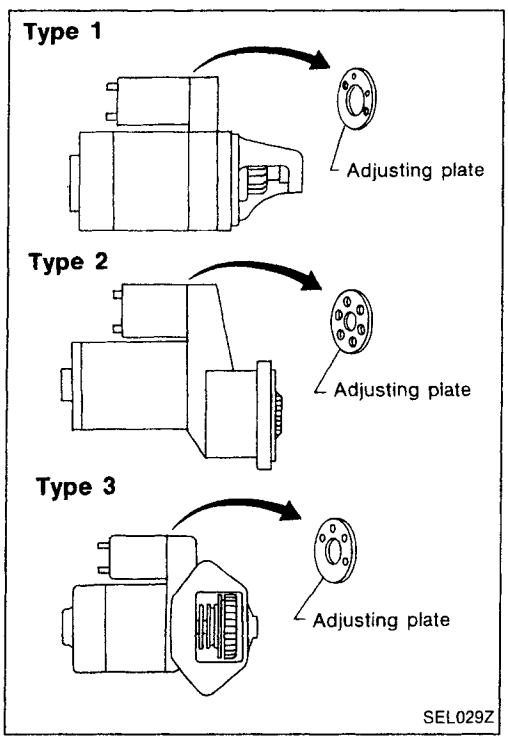

- Not in the specified value ... Adjust by adjusting plate.

EL

Simpo PDF Merge and Split Unregistered Version - http://www.simpopdf.com

Service Data and Specifications (SDS)

STARTER

Type	S114-766A	M1T72087A	M1T77281	S114-769A	S114-630	M3T37783	M2T62071A	S13-305	S13-331	M2T61871A
	HITACHI	MITSUBISHI		HITACHI		MITSUBISHI		HITACHI		MITSUBISHI
	Reduction				Non-reduction		Reduction			
Applied model	Europe									
	GA engines						CD20			
	A/T		M/T							
System voltage V	12									
No-load Terminal voltage V	11.0				11.5		11.0			
Current A	Less than 85	50 - 75		Less than 85	Less than 60		Less than 105	Less than 140		Less than 110
Revolution rpm	More than 2,950	3,000 - 4,000		More than 2,950	More than 7,000	More than 6,500	More than 4,030	More than 3,900		More than 4,100
Minimum diameter of commutator mm (in)	28.0 (1,102)	28.8 (1.134)		28.0 (1,102)	39.0 (1.535)	31.4 (1.236)		35.5 (1.398)		31.4 (1.236)
Minimum length of brush mm (in)	10.5 (0.413)	12.0 (0.472)		10.5 (0.413)	11.0 (0.433)	11.5 (0.453)		11.0 (0.433)		11.5 (0.453)
Brush spring tension N (kg, lb)	16.2 (1.65, 3.64)	13.7 - 25.5 (1.4 - 2.6, 3.1 - 5.7)		14.7 - 17.7 (1.5 - 1.8, 3.3 - 4.0)	17.7 - 21.6 (1.8 - 2.2, 4.0 - 4.9)	13.7 - 25.5 (1.4 - 2.6, 3.1 - 5.7)		28.4 - 34.3 (2.90 - 3.50, 6.38 - 7.71)		13.7 - 25.5 (1.4 - 2.6, 3.1 - 5.7)
Clearance between bearing metal and armature shaft mm (in)	Less than 0.2 (0.008)	—	Less than 0.2 (0.008)	—	Less than 0.2 (0.008)	—				
Clearance "ℓ" between pinion front edge and pinion stopper mm (in)	0.3 - 2.5 (0.012 - 0.098)	0.5 - 2.0 (0.020 - 0.079)		0.3 - 2.5 (0.012 - 0.098)		0.5 - 2.0 (0.020 - 0.079)	—	0.3 - 2.0 (0.012 - 0.079)	0.3 - 0.8 (0.012 - 0.031)	—
Movement "ℓ" in height of pinion assembly mm (in)	—						0.5 - 2.0 (0.020 - 0.079)	—	—	0.3 - 1.5 (0.012 - 0.059)

Simpo PDF Merge and Split Unregistered Version - http://www.simpopdf.com

Service Data and Specifications (SDS) (Cont'd)

Type	M1T72985A	S114-806	S114-800A	M0T80281ZC	M0T80281	M2T49282	S114-568A	S114-570B	M2T48681
	MITSUBISHI	HITACHI		MITSUBISHI			HITACHI		MITSUBISHI
	Reduction			Non-reduction					
Applied model	Australia					RHD Except Europe and Australia			
	SR20DE	GA engines							
		A/T		M/T				A/T	
System voltage V	12								
No-load									
Terminal voltage V	11.0					11.5			
Current A	50 - 75	Less than 90				Less than 53	Less than 60		Less than 53
Revolution rpm	3,000 - 4,000	More than 2,700	More than 2,750			More than 6,000			
Minimum diameter of commutator mm (in)	28.8 (1.134)	28.0 (1.102)		28.8 (1.134)		31.4 (1.236)	28.0 (1.102)		31.4 (1.236)
Minimum length of brush mm (in)	12.0 (0.472)	10.5 (0.413)		7.0 (0.276)		11.5 (0.453)	9.0 (0.354)		11.5 (0.453)
Brush spring tension N (kg, lb)	13.7 - 25.5 (1.4 - 2.6, 3.1 - 5.7)	12.7 - 17.7 (1.3 - 1.8, 2.9 - 4.0)		11.77 - 23.53 (1.2 - 2.4, 2.6 - 5.3)		13.7 - 25.5 (1.4 - 2.6, 3.1 - 5.7)	9.8 - 13.7 (1.0 - 1.4, 2.2 - 3.1)		13.7 - 25.5 (1.4 - 2.6, 3.1 - 5.7)
Clearance between bearing metal and armature shaft mm (in)	Less than 0.2 (0.008)								
Clearance "f" between pinion front edge and pinion stopper mm (in)	0.5 - 2.0 (0.020 - 0.079)	0.3 - 2.5 (0.012 - 0.098)		0.5 - 2.0 (0.020 - 0.079)			0.3 - 2.5 (0.012 - 0.098)		0.5 - 2.0 (0.020 - 0.079)
Movement "f" in height of pinion assembly mm (in)	—								

EL

Simpo PDF Merge and Split Unregistered Version - http://www.simpopdf.com

Wiring Diagram — CHARGE —

GASOLINE ENGINE MODELS

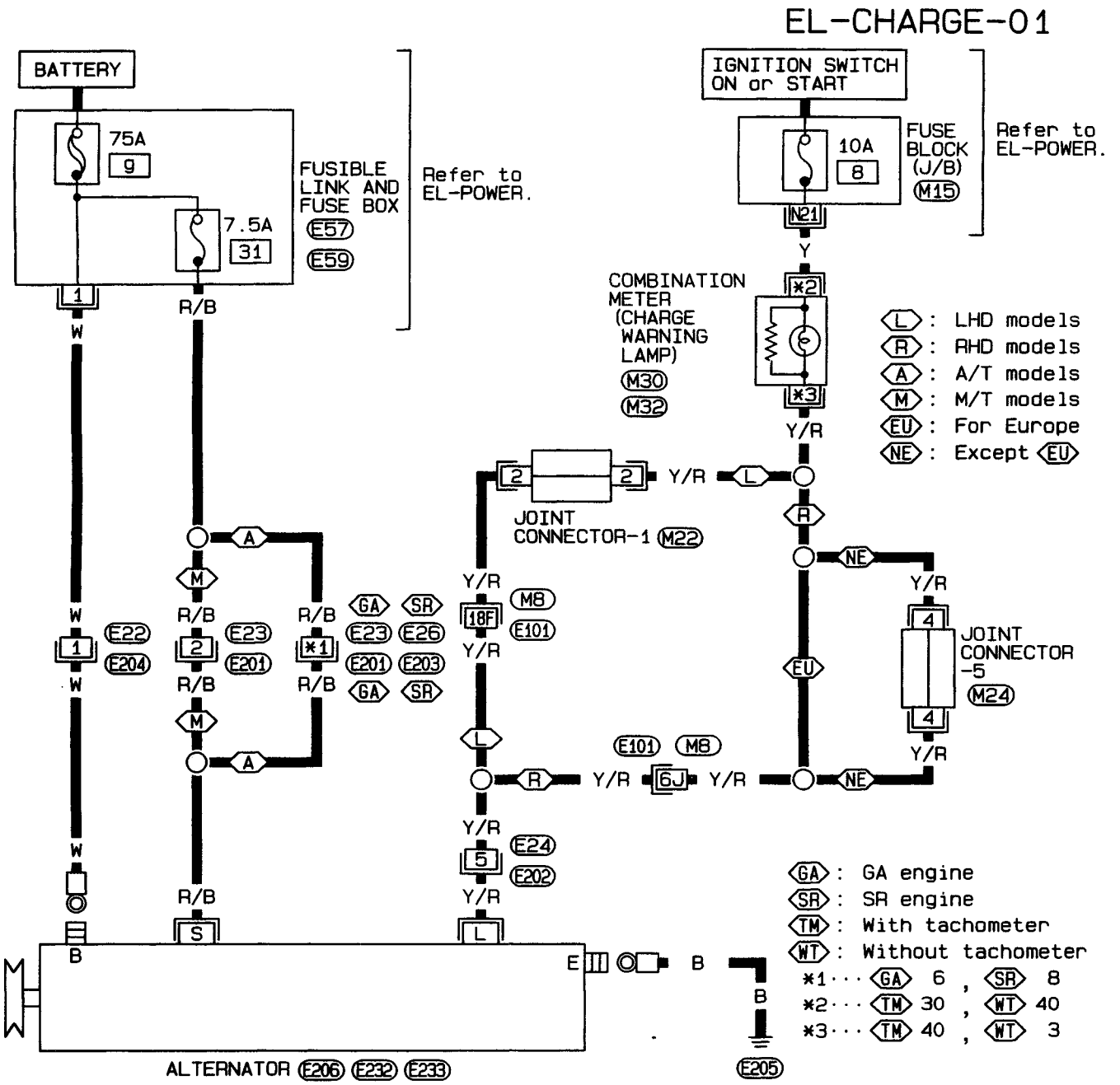

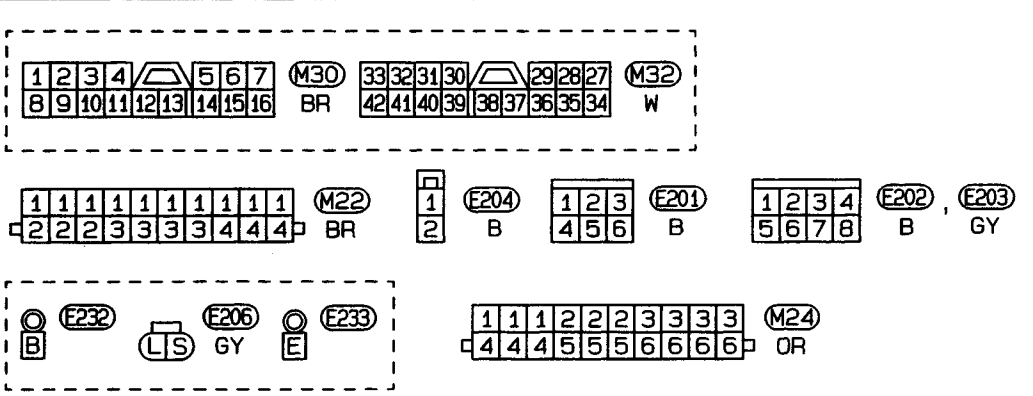

Refer to last page (Foldout page).

M8 , E101

M15

E57 , E59

HEL196

Simpo PDF Merge and Split Unregistered Version - http://www.simpopdf.com

Wiring Diagram — CHARGE — (Cont'd)

DIESEL ENGINE MODELS

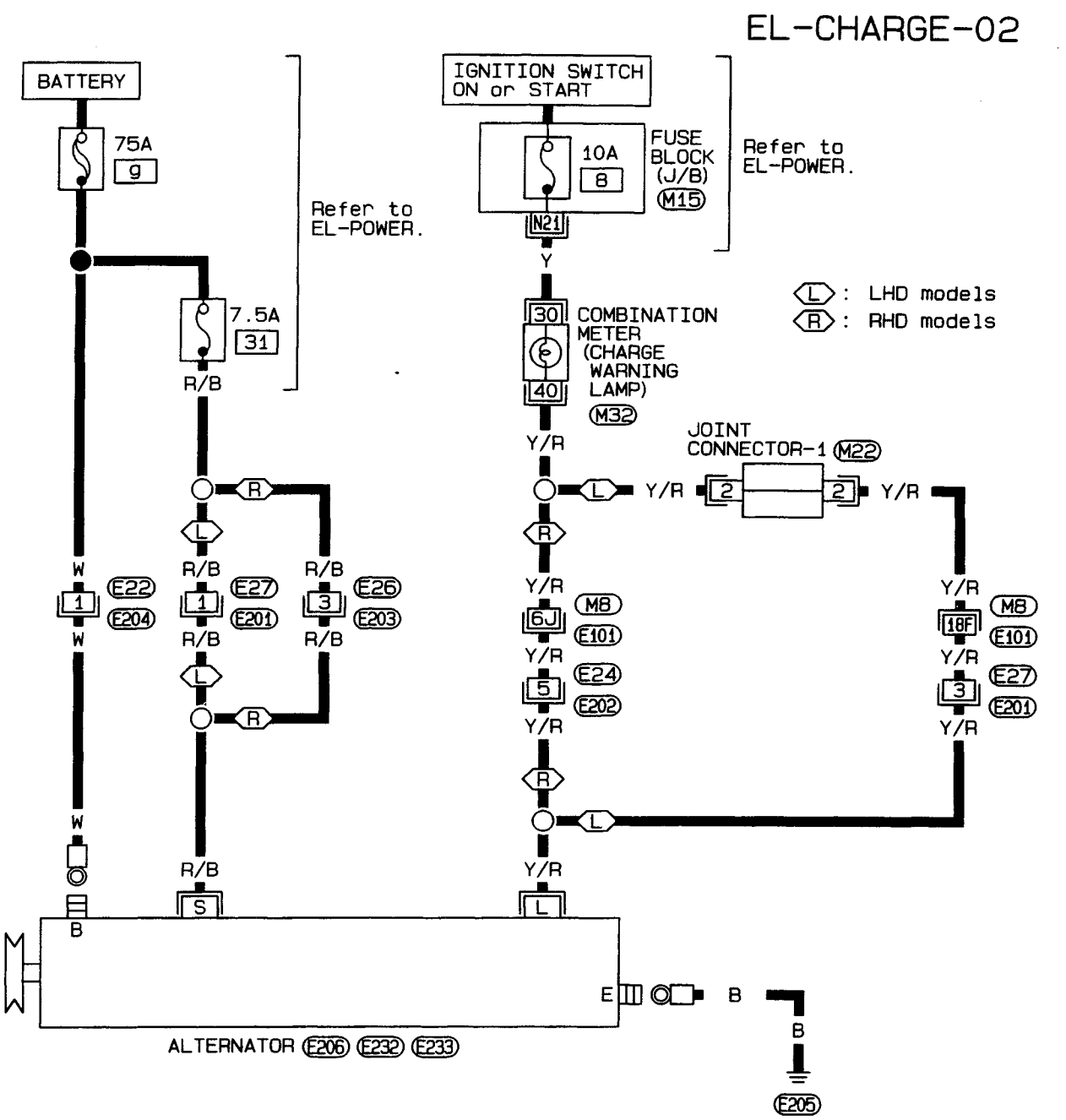

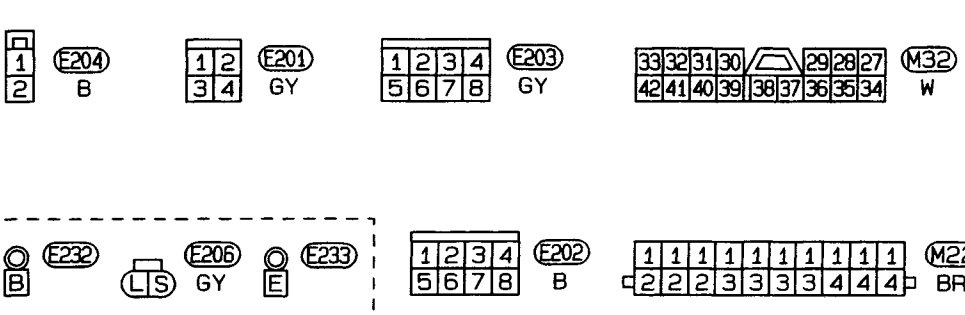

Refer to last page (Foldout page).

M8, E101

M15

EL

HEL197

Simpo PDF Merge and Split Unregistered Version - http://www.simpopdf.com

Trouble Diagnoses

Before conducting an alternator test, make sure that the battery is fully charged. A 30-volt voltmeter and suitable test probes are necessary for the test. The alternator can be checked easily by referring to the Inspection Table.

Before starting, inspect the fusible link.

WITH IC REGULATOR

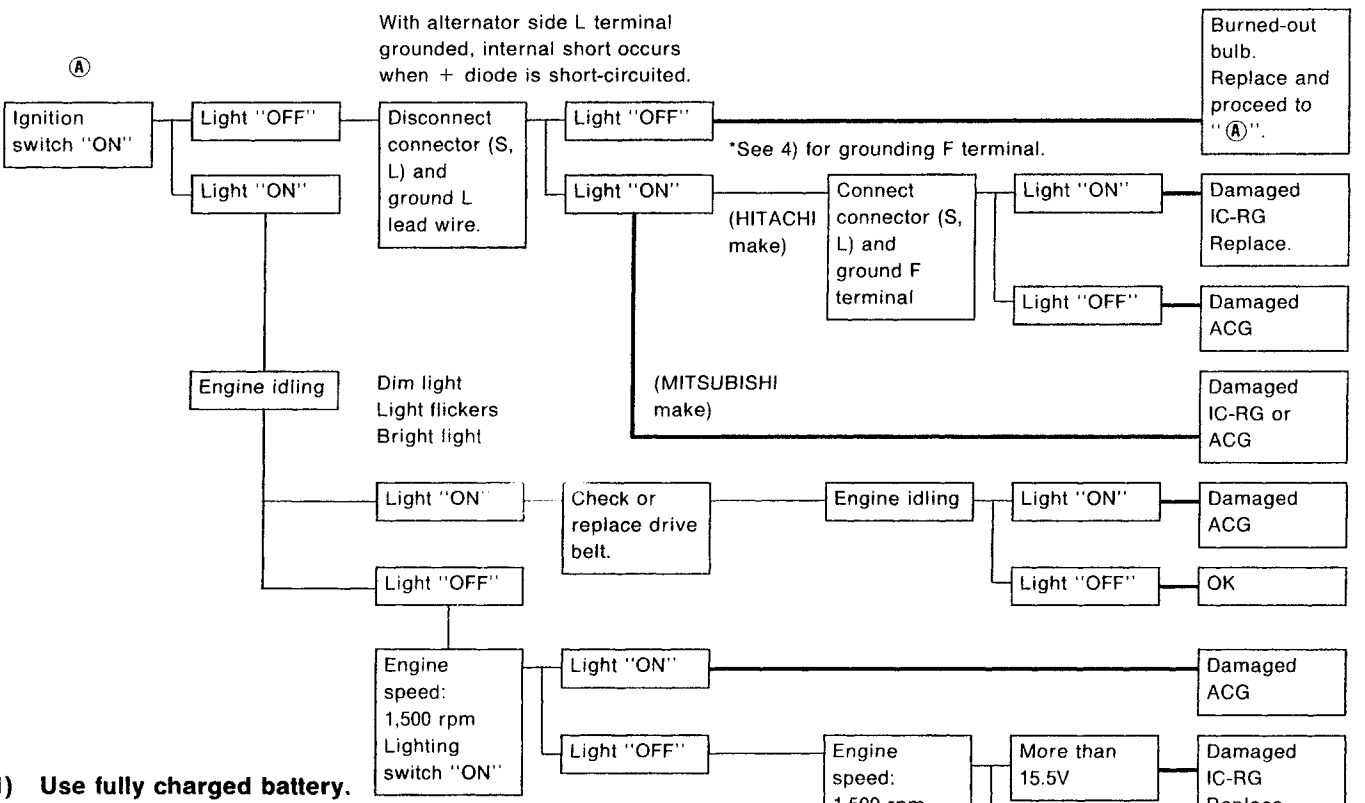

1) **Use fully charged battery.**
2) **Light : Charge warning light**
   ACG : Alternator parts except IC regulator
   IC-RG : IC regulator
   OK : IC-alternator is in good condition.
3) **When reaching "Damaged ACG", remove alternator from vehicle and disassembly, inspect and correct or replace faulty parts.**
4) ***Method of grounding F terminal (HITACHI make only)**

Gasoline engine model

Contact tip of wire with brush and attach wire to alternator body.

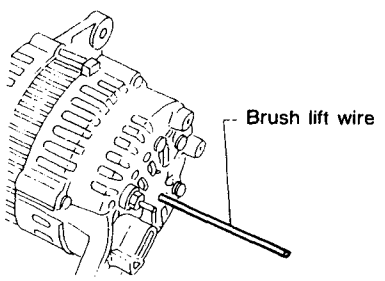

SEL030Z

5) **Terminals "S", "L", "B" and "E" are marked on rear cover of alternator.**

Simpo PDF Merge and Split Unregistered Version - http://www.simpopdf.com

Construction

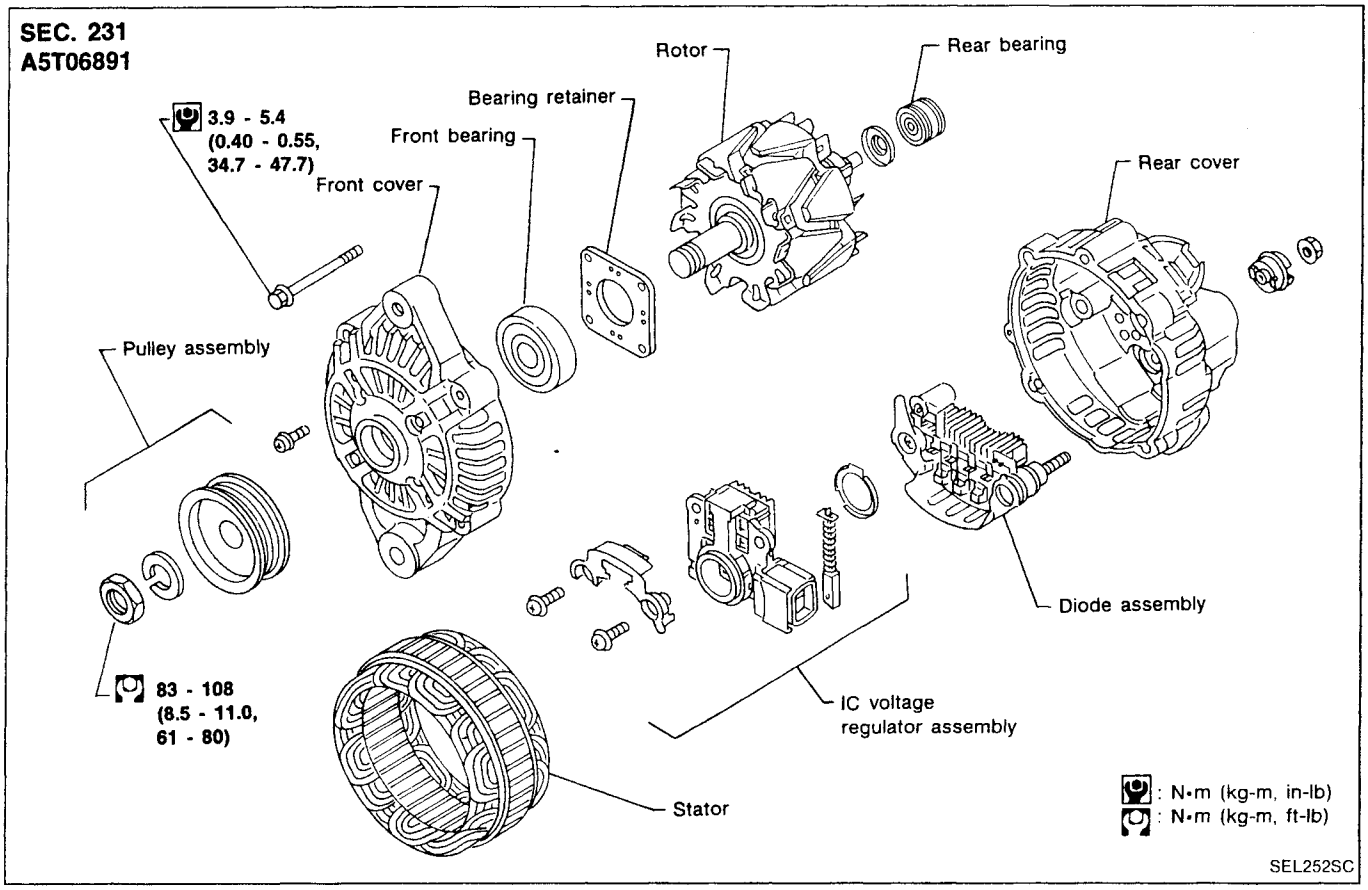

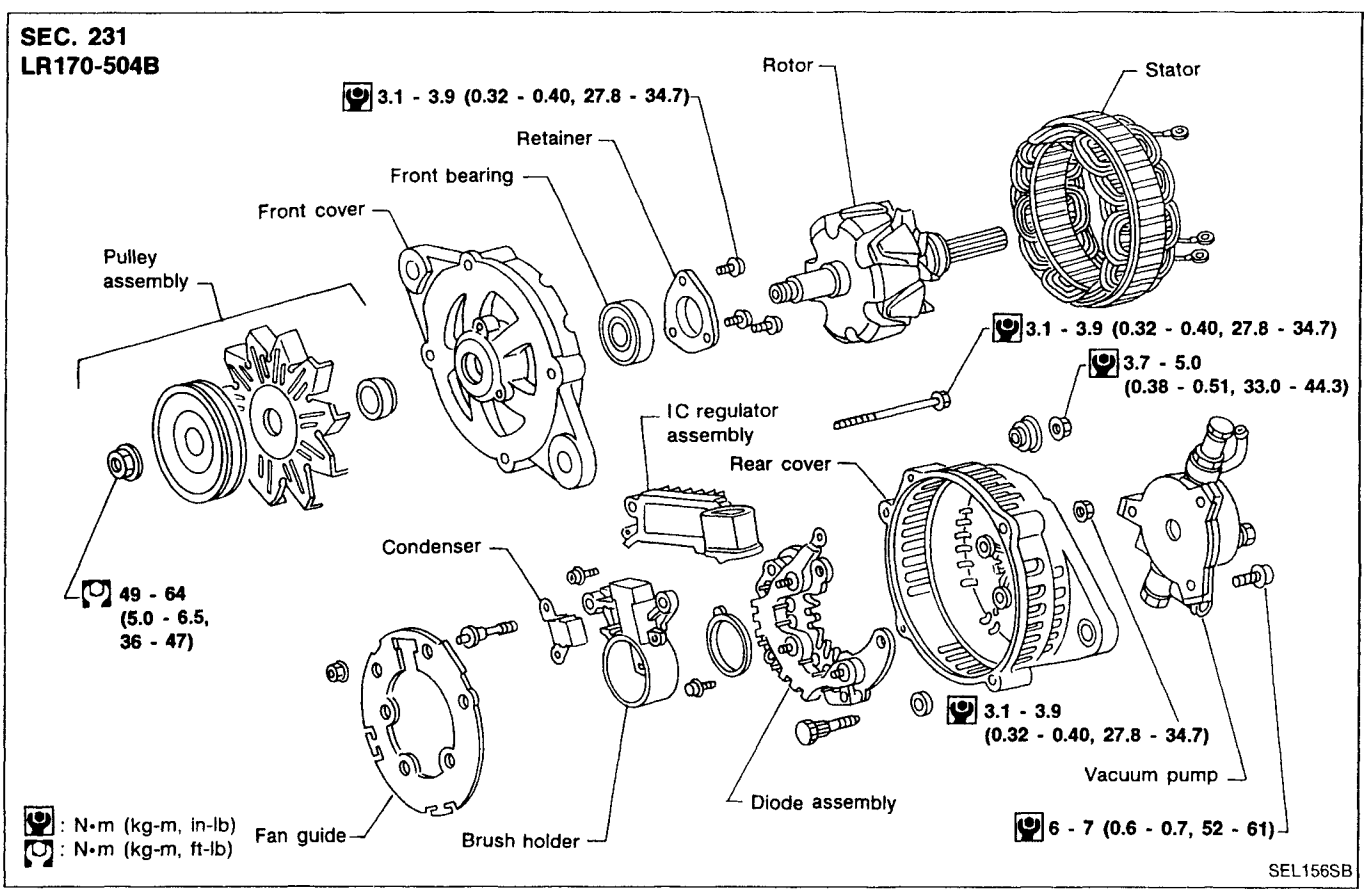

EL

Simpo PDF Merge and Split Unregistered Version - http://www.simpopdf.com

Construction (Cont'd)

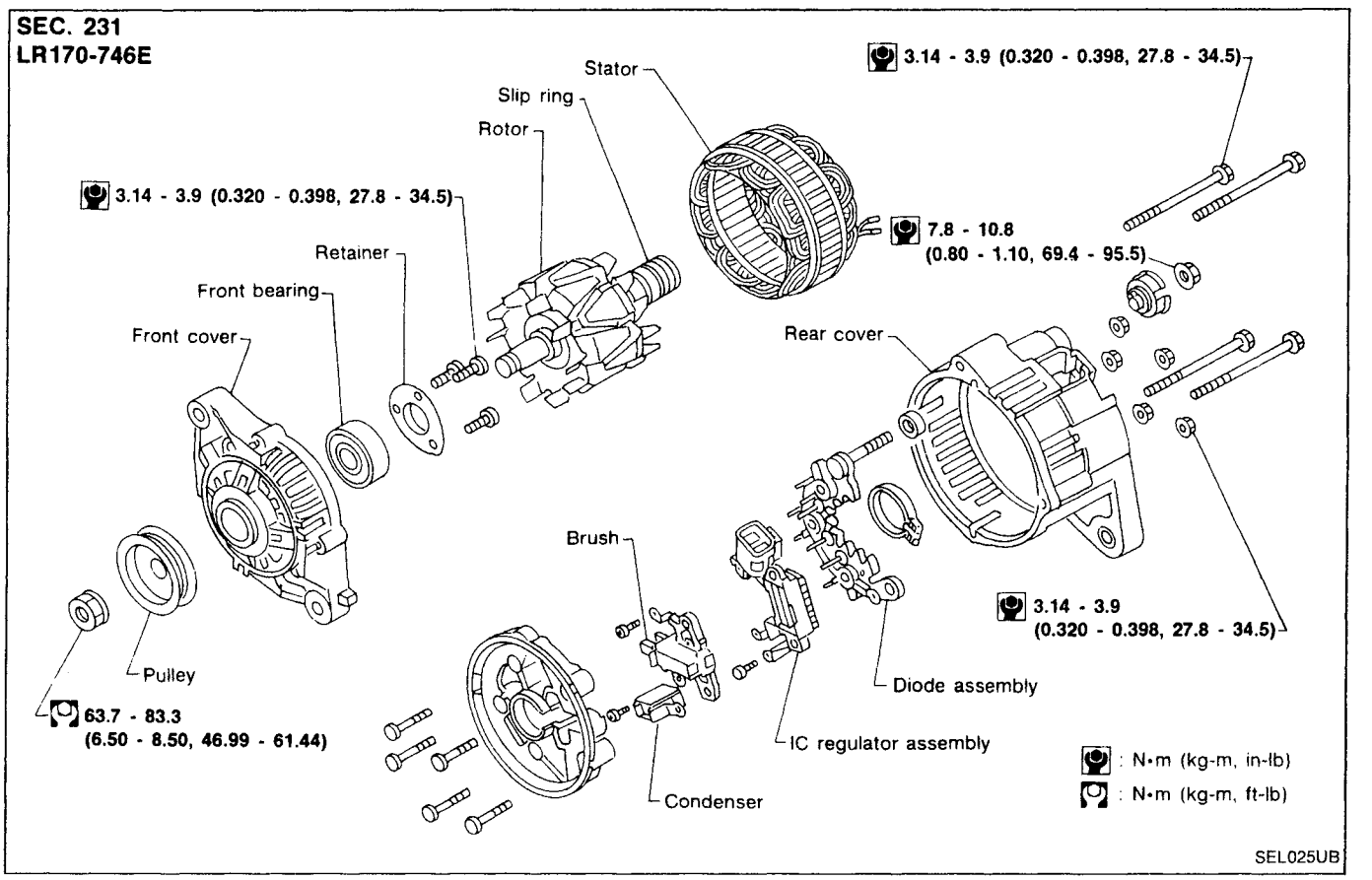

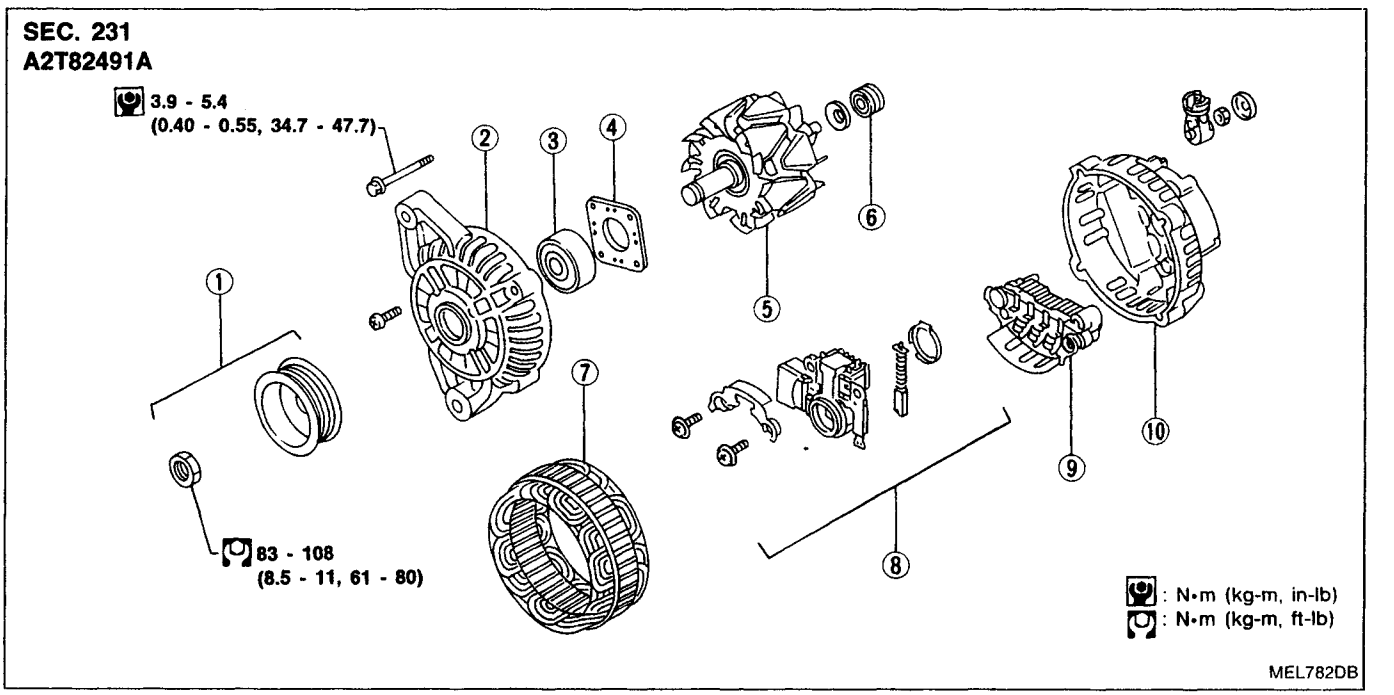

① Pulley assembly
② Front cover
③ Front bearing
④ Bearing retainer
⑤ Rotor
⑥ Rear bearing
⑦ Stator
⑧ IC voltage regulator assembly
⑨ Diode assembly
⑩ Rear cover

Simpo PDF Merge and Split Unregistered Version - http://www.simpopdf.com

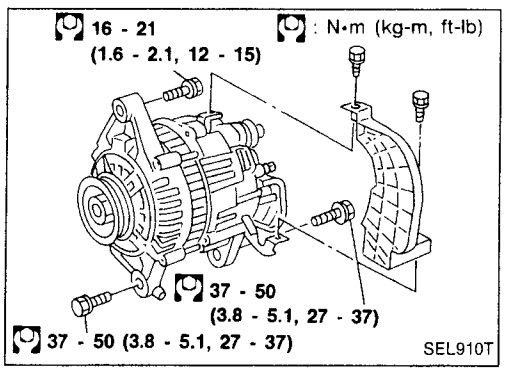

Removal and Installation

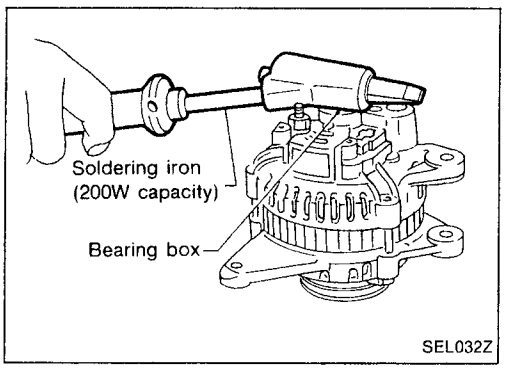

Disassembly

REAR COVER REMOVAL

CAUTION:

Rear cover may be hard to remove because a ring is used to lock outer race of rear bearing. To facilitate removal of rear cover, heat just bearing box section with a 200W soldering iron. Do not use a heat gun, as it can damage diode assembly.

REAR BEARING

CAUTION:

- **Do not reuse rear bearing after removal. Replace with a new one.**
- **Do not lubricate rear bearing outer race.**

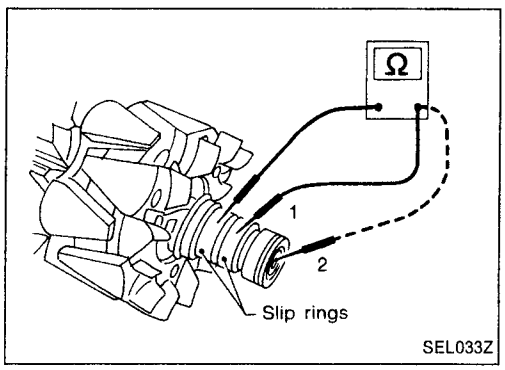

Rotor Check

1. Resistance test
   Resistance: Refer to SDS (EL-61).
   - Not within the specified values ... Replace rotor.
2. Insulator test
   - Continuity exists ... Replace rotor.
3. Check slip ring for wear.
   Slip ring minimum outer diameter:
   Refer to SDS (EL-61).
   - Not within the specified values ... Replace rotor.

EL

Simpo PDF Merge and Split Unregistered Version - http://www.simpopdf.com

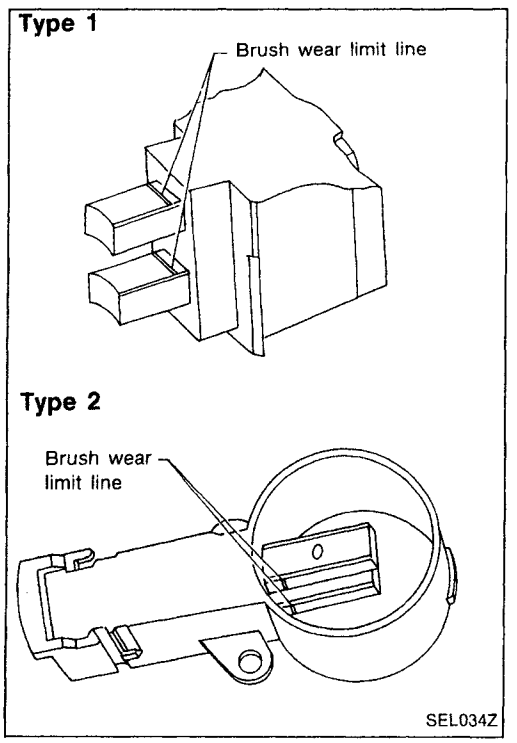

Brush Check

1. Check smooth movement of brush.
   - Not smooth ... Check brush holder and clean.
2. Check brush for wear.
   - Replace brush if it is worn down to the limit line.

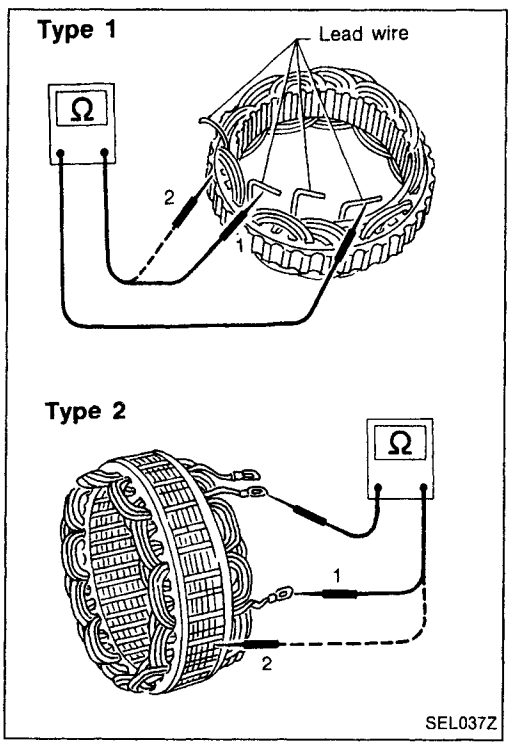

Stator Check

1. Continuity test
   - No continuity ... Replace stator.
2. Ground test
   - Continuity exists ... Replace stator.

Simpo PDF Merge and Split Unregistered Version - http://www.simpopdf.com

Diode Check

MAIN DIODES

- Use an ohmmeter to check condition of diodes as indicated in chart below.
- If any of the test results is not satisfactory, replace diode assembly.

	Ohmmeter probes		Judgement
	Positive ⊕	Negative ⊖	
Diodes check (Positive side)	Positive diode plate	Diode terminals	Diode conducts in only one direction.
	Diode terminals	Positive diode plate	
Diodes check (Negative side)	Negative diode plate	Diode terminals	Diode conducts in only one direction.
	Diode terminals	Negative diode plate	

Type 1

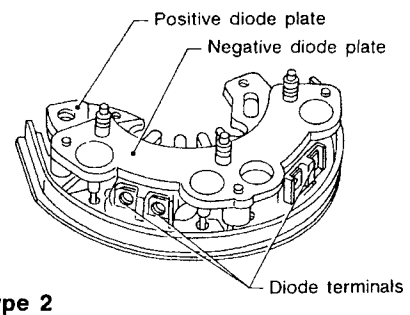

Type 2

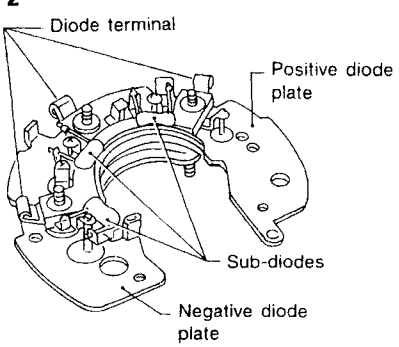

Type 3

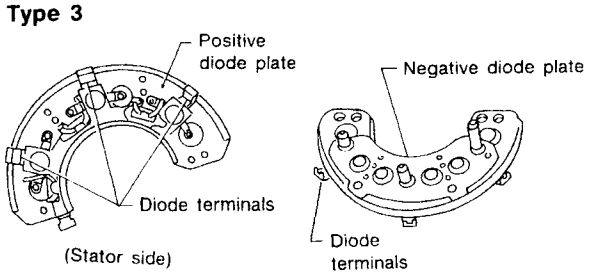

Type 4

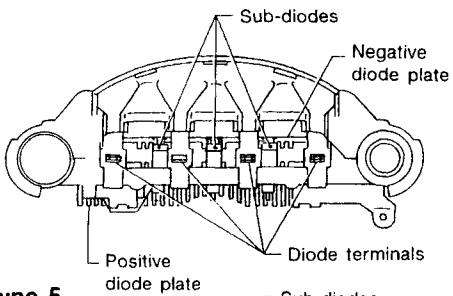

Type 5

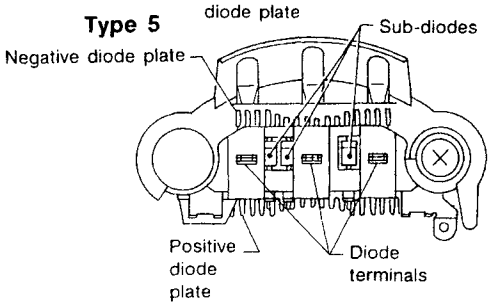

Type 6

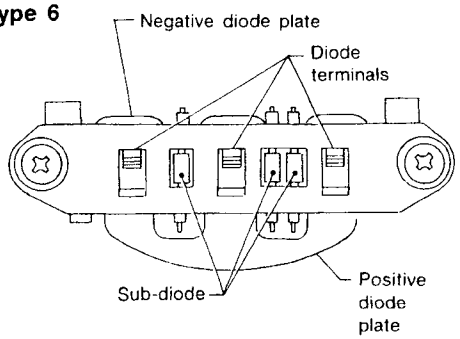

SEL039Z

EL

Simpo PDF Merge and Split Unregistered Version - http://www.simpopdf.com

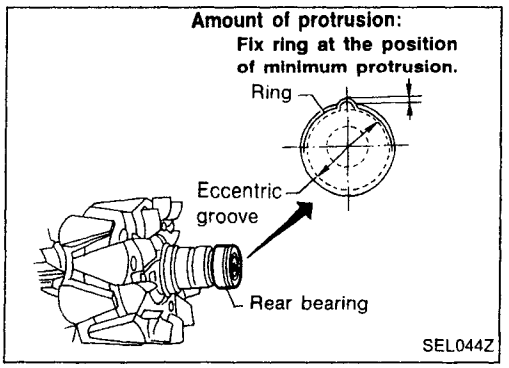

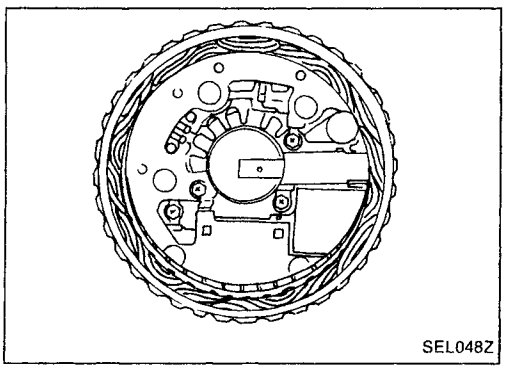

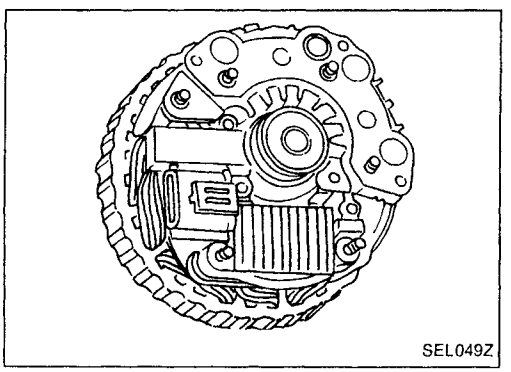

Assembly

RING FITTING IN REAR BEARING

- Fix ring into groove in rear bearing so that it is as close to the adjacent area as possible.

CAUTION:

Do not reuse rear bearing after removal.

REAR COVER INSTALLATION

(1) Fit brush assembly, diode assembly, regulator assembly and stator.

(2) Push brushes up with fingers and install them to rotor.

Take care not to damage slip ring sliding surface.

Simpo PDF Merge and Split Unregistered Version - http://www.simpopdf.com

Service Data and Specifications (SDS)

ALTERNATOR

Type	A5T06891	LR170-746E	LR170-504B	A2T82491A
	MITSUBISHI	HITACHI		MITSUBISHI
Applied model	GA engines		CD20	SR20DE
Nominal rating V-A	12-70			12-80
Ground polarity	Negative			
Minimum revolutions under no-load (when 13.5V is applied) rpm	Less than 1,300	Less than 1,000		Less than 1,300
Hot output current (When 13.5V is applied) A/rpm	More than 21/1,300 More than 50/2,500	More than 22/1,300 More than 50/2,500 More than 67/5,000	More than 27/1,300 More than 56/2,500 More than 66/5,000	More than 22/1,300 More than 50/2,500 More than 65/2,500
Regulated output voltage V	14.1 - 14.7			
Minimum length of brush mm (in)	5.0 (0.197)	6.0 (0.236)		5.0 (0.197)
Brush spring pressure N (g, oz)	4.609 - 5.786 (470 - 590, 16.58 - 20.81)	1.0 - 3.43 (102 - 350, 3.60 - 12.34)	0.92 - 3.28 (94 - 334, 3.32 - 11.78)	4.609 - 5.786 (470 - 590, 16.58 - 20.81)
Slip ring minimum diameter mm (in)	22.1 (0.870)	26.0 (1.024)	31.6 (1.244)	22.1 (0.870)
Rotor coil resistance at 20°C (68°F) Ω	2.5 - 2.9	2.58	4.8	2.4 - 2.9

EL

Simpo PDF Merge and Split Unregistered Version - http://www.simpopdf.com

Combination Switch/Check

FOR EUROPE AND ISRAEL

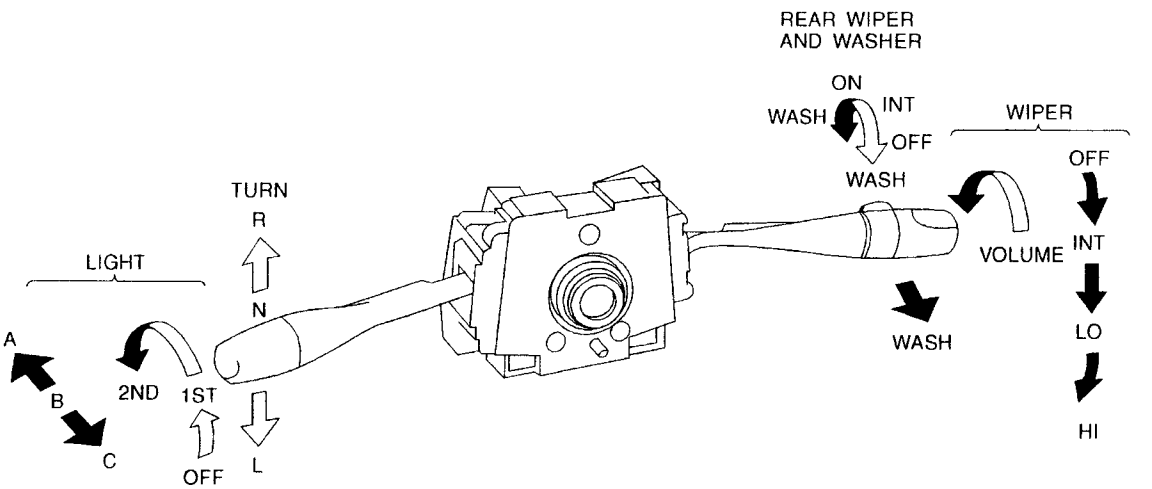

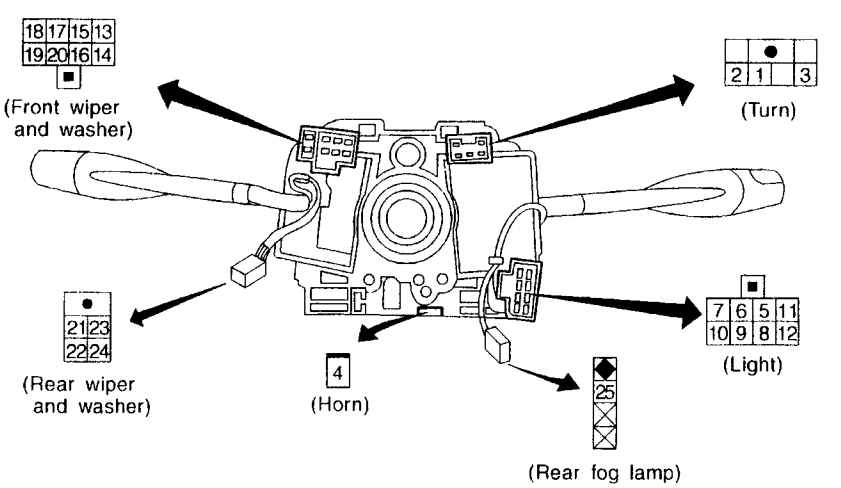

LIGHTING SWITCH

	OFF			1ST			2ND		
	A	B	C	A	B	C	A	B	C
5			○			○	○	○	○
6			○			○	○		○
7								○	
8			○			○	○	○	○
9			○			○	○		○
10								○	
11				○	○	○	○	○	○
12				○	○	○	○	○	○
25							○	○	○

FRONT WIPER AND WASHER SWITCH

	OFF	INT	LO	HI	WASH
13	○	○			
14	○	○	○		
15		○			
16				○	
17		○	○	○	○
18					○

TURN SIGNAL SWITCH

	L	N	R
1	○		○
2			○
3	○		

REAR WIPER AND WASHER SWITCH

	WASH	OFF	INT	ON	WASH
21			○		
22				○	○
23	○				○
24	○		○	○	○

INTERMITTENT WIPER VOLUME

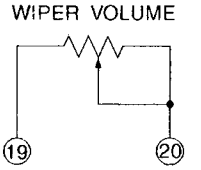

HORN SWITCH (Without air bag)

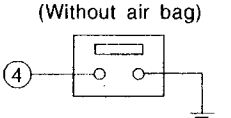

HEL011

Simpo PDF Merge and Split Unregistered Version - http://www.simpopdf.com

Combination Switch/Check (Cont'd)

EXCEPT FOR EUROPE AND ISRAEL

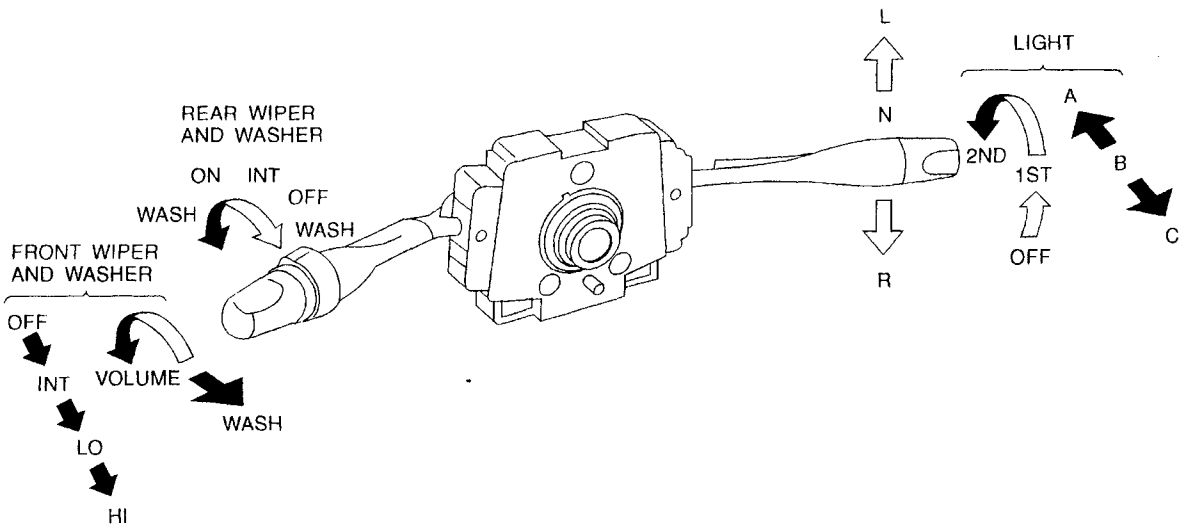

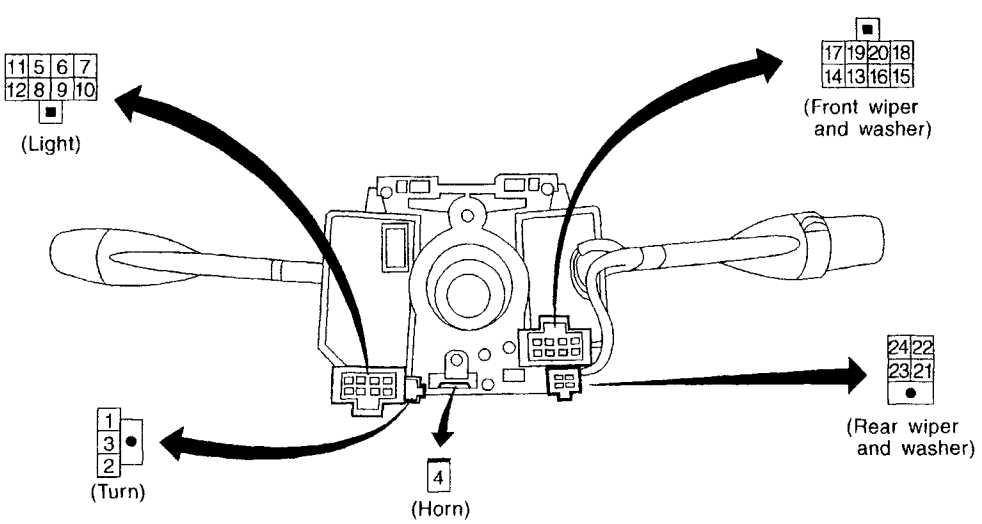

LIGHTING SWITCH

	OFF			1ST			2ND		
	A	B	C	A	B	C	A	B	C
5		○				○	○	○	○
6		○				○	○		○
7								○	
8		○				○	○	○	○
9		○				○	○		○
10								○	
11				○	○	○	○	○	○
12				○	○	○	○	○	○

FRONT WIPER AND WASHER SWITCH

	OFF	INT	LO	HI	WASH
13	○	○			
14	○	○	○		
15		○			
16		○	○	○	
17		○	○	○	○
18					○

REAR WIPER AND WASHER SWITCH

	WASH	OFF	INT	ON	WASH
21			○		
22				○	○
23	○				○
24	○		○	○	○

HORN SWITCH
(Without air bag)

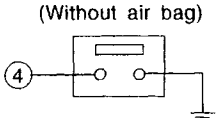

INTERMITTENT
WIPER VOLUME

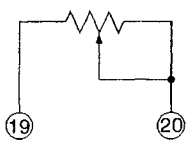

TURN SIGNAL
SWITCH

	L	N	R
1	○		○
2			○
3	○		

EL

HEL012

Simpo PDF Merge and Split Unregistered Version - http://www.simpopdf.com

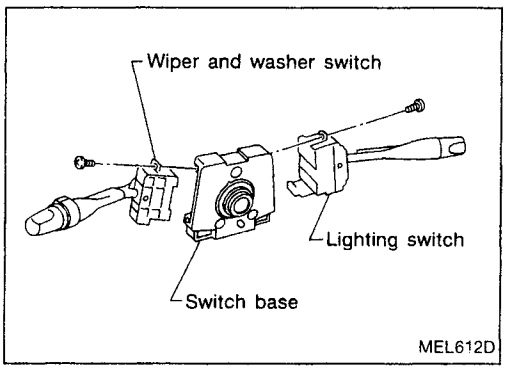

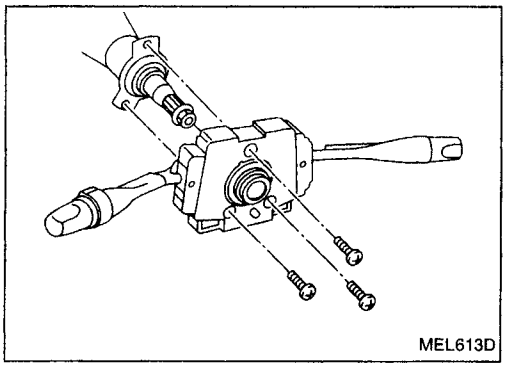

Replacement

For removing/installing air bag module and spiral cable, refer to RS section.

- Each switch can be replaced without removing combination switch base.
- To remove combination switch base, remove base attaching screw.

Simpo PDF Merge and Split Unregistered Version - http://www.simpopdf.com

Wiring Diagram — H/LAMP —

EL-H/LAMP-01

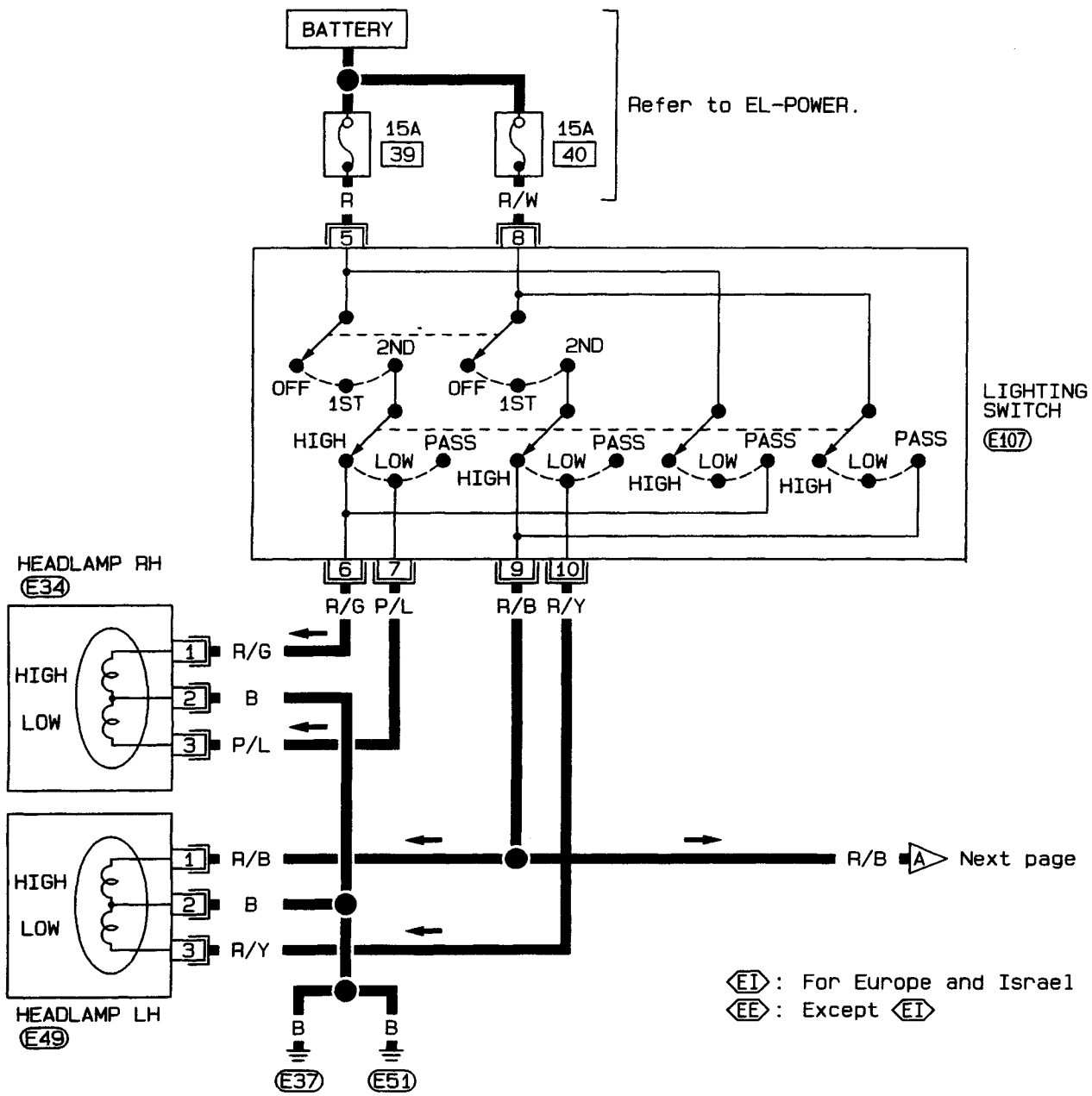

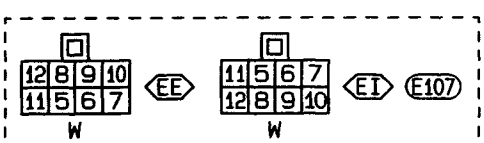

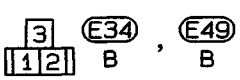

EL

Simpo PDF Merge and Split Unregistered Version - http://www.simpopdf.com

Wiring Diagram — H/LAMP — (Cont'd)

EL-H/LAMP-02

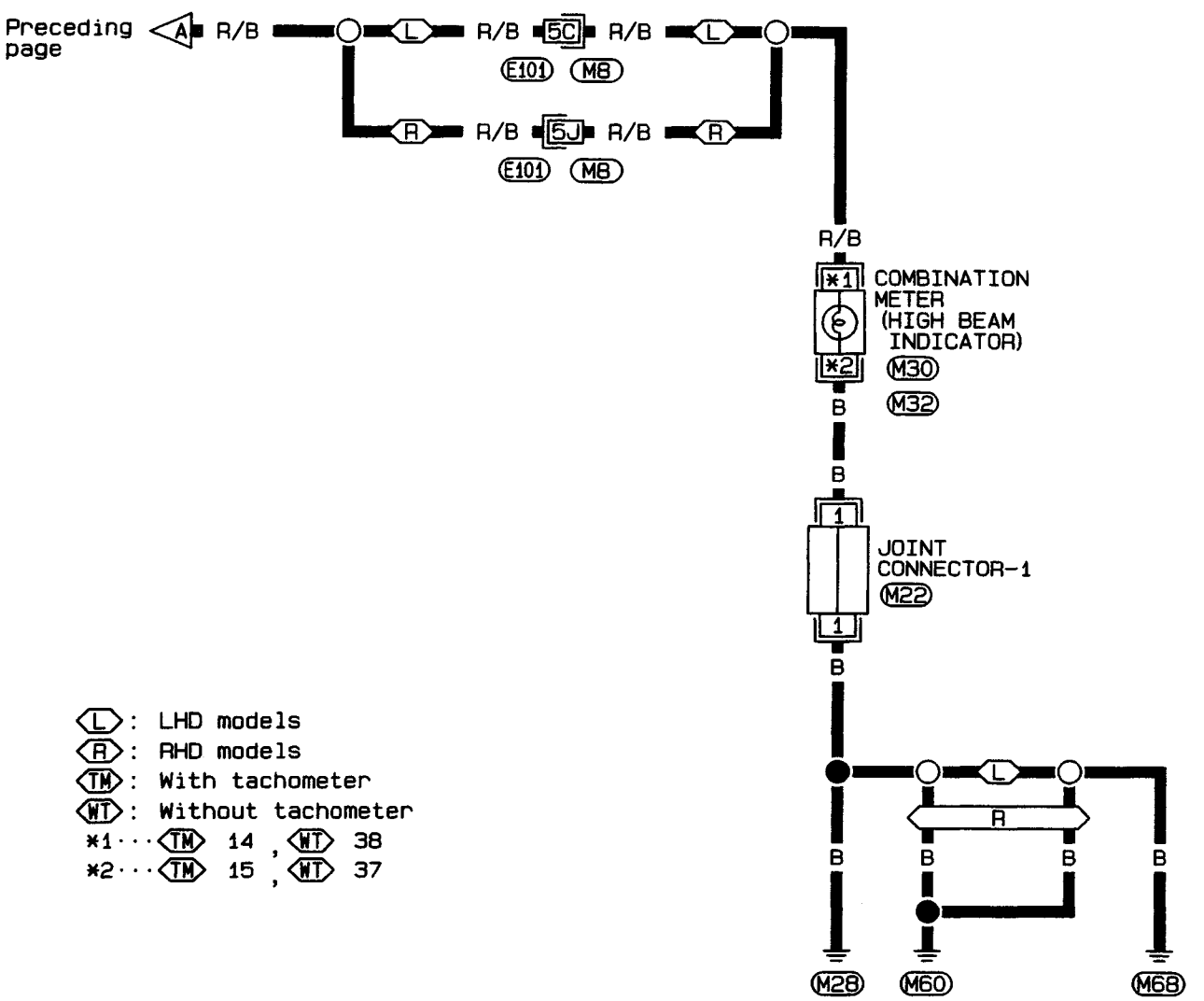

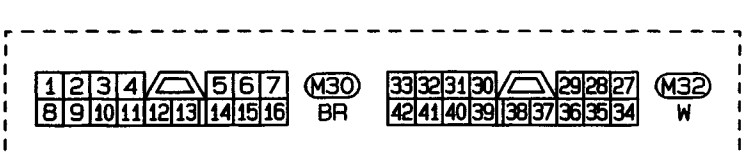

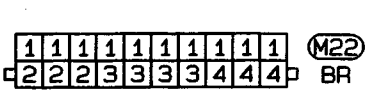

Refer to last page (Foldout page).

M8 , E101

HEL014

Simpo PDF Merge and Split Unregistered Version - http://www.simpopdf.com

Trouble Diagnoses

Symptom	Possible cause	Repair order
LH headlamps do not operate.	1. Bulb 2. LH headlamp ground 3. 15A fuse 4. Lighting switch	1. Check bulb. 2. Check LH headlamp ground. (Terminal ②) 3. Check 15A fuse (No. 40, located in fusible link and fuse box). 4. Check lighting switch.
RH headlamps do not operate.	1. Bulb 2. RH headlamp ground 3. 15A fuse 4. Lighting switch	1. Check bulb. 2. Check RH headlamp ground. (Terminal ②) 3. Check 15A fuse (No. 39, located in fusible link and fuse box). 4. Check lighting switch.
LH high beam does not operate, but LH low beam operates.	1. Bulb 2. Open in LH high beam circuit 3. Lighting switch	1. Check bulb. 2. Check R/B wire between lighting switch and LH headlamp for an open circuit. 3. Check lighting switch.
LH low beam does not operate, but LH high beam operates.	1. Bulb 2. Open in LH low beam circuit 3. Lighting switch	1. Check bulb. 2. Check R/Y wire between lighting switch and LH headlamp for an open circuit. 3. Check lighting switch.
RH high beam does not operate, but RH low beam operates.	1. Bulb. 2. Open in RH high beam circuit 3. Lighting switch.	1. Check bulb. 2. Check R/G wire between lighting switch and RH headlamp for an open circuit. 3. Check lighting switch.
RH low beam does not operate, but RH high beam operates.	1. Bulb 2. Open in RH low beam circuit 3. Lighting switch	1. Check bulb. 2. Check P/L wire between lighting switch and RH headlamp for an open circuit. 3. Check lighting switch.
High beam indicator does not work.	1. Bulb 2. High beam indicator ground 3. Open in high beam circuit	1. Check bulb in combination meter. 2. Check combination meter ground. [Terminal ⑮ (with tachometer) or ㊲ (without tachometer)] 3. Check R/B wire between lighting switch and combination meter for an open circuit.

Simpo PDF Merge and Split Unregistered Version - http://www.simpopdf.com

Operation (Daytime light system)

The headlamps' low beam and clearance, license, tail and illumination lamps automatically turn on after starting the engine with lighting switch in "OFF" position.
Lighting switch operations other than the above are the same as conventional light systems.

Engine		With engine stopped									With engine running								
Lighting switch		OFF			1ST			2ND			OFF			1ST			2ND		
		A	B	C	A	B	C	A	B	C	A	B	C	A	B	C	A	B	C
Headlamp	High beam	X	X	○	X	X	○	○	X	○	X	X	○	X	X	○	○	X	○
	Low beam	X	X	X	X	X	X	X	○	X	○	○	○	X	X	X	X	○	X
Clearance and tail lamp		X	X	X	○	○	○	○	○	○	○	○	○	○	○	○	○	○	○
License and instrument illumination lamp		X	X	X	○	○	○	○	○	○	○	○	○	○	○	○	○	○	○

○: Lamp "ON"
X: Lamp "OFF"
□ : Added functions

Simpo PDF Merge and Split Unregistered Version - http://www.simpopdf.com

System Description

The headlamp system on vehicles for North Europe contains a daytime light unit. The unit activates the following whenever the engine is running with the lighting switch in the OFF position:

- Low beam headlamps
- Clearance, license, tail and illumination lamps

Power is supplied at all times

- through 15A fuse (No. 40 , located in the fusible link and fuse box)
- to daytime light unit terminal ② and
- to lighting switch terminal ⑧.

Power is also supplied at all times

- through 15A fuse (No. 39 , located in the fusible link and fuse box)
- to daytime light unit terminal ③ and
- to lighting switch terminal ⑤.

Power is also supplied at all times

- through 10A fuse (No. 36 , located in the fusible link and fuse box)
- to daytime light unit terminal ① and
- to lighting switch terminal ⑪.

With the ignition switch in the ON or START position, power is supplied

- through 10A fuse (No. 25 , located in the fuse block)
- to daytime light unit terminal ⑦.

With the ignition switch in the START position, power is supplied

- through 7.5A fuse (No. 26 , located in the fuse block)
- to daytime light unit terminal ⑥.

Ground is supplied to daytime light unit terminal ⑨ through body grounds E37 and E51.

HEADLAMP OPERATION (Daytime light cancel operation)

Power is supplied at all times

- through 10A fuse (No. 36 , located in the fuse and fusible link box)
- to lighting switch terminal ⑪.

When the lighting switch is turned to the 1st or 2nd position

- through lighting switch terminal ⑫,
- to daytime light unit terminal ⑪.

Then daytime light will be canceled. And the lighting system operation will be the same as no daytime light system.

DAYTIME LIGHT OPERATION

With the engine running and the lighting switch in the OFF position, power is supplied

- from alternator terminal Ⓛ
- to daytime light unit terminal ⑧
- to daytime light unit terminal ②
- through daytime light unit terminal ⑤
- to terminal ③ of LH headlamp
- to daytime light unit terminal ③
- through daytime light unit terminal ④
- to terminal ③ of RH headlamp
- to daytime light unit terminal ①
- through daytime light unit terminal ⑩
- to tail lamp and illumination.

Ground is supplied to terminal ② of each headlamp through body grounds E37 and E51.
Ground is also supplied to terminal ⑨ of daytime light unit through body grounds E37 and E51.

EL

Simpo PDF Merge and Split Unregistered Version - http://www.simpopdf.com

Schematic

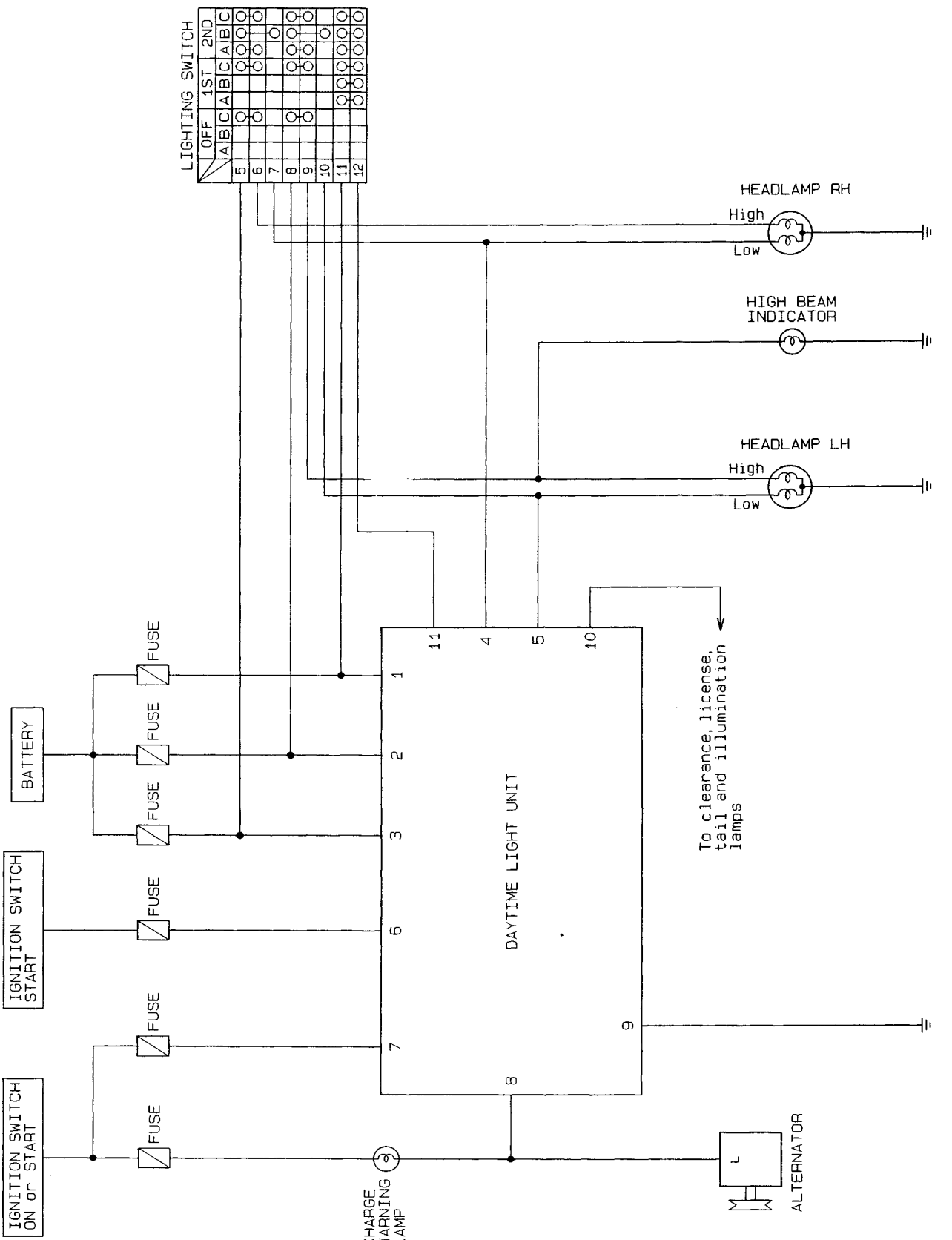

HEL015

Simpo PDF Merge and Split Unregistered Version - http://www.simpopdf.com

Wiring Diagram — DTRL —

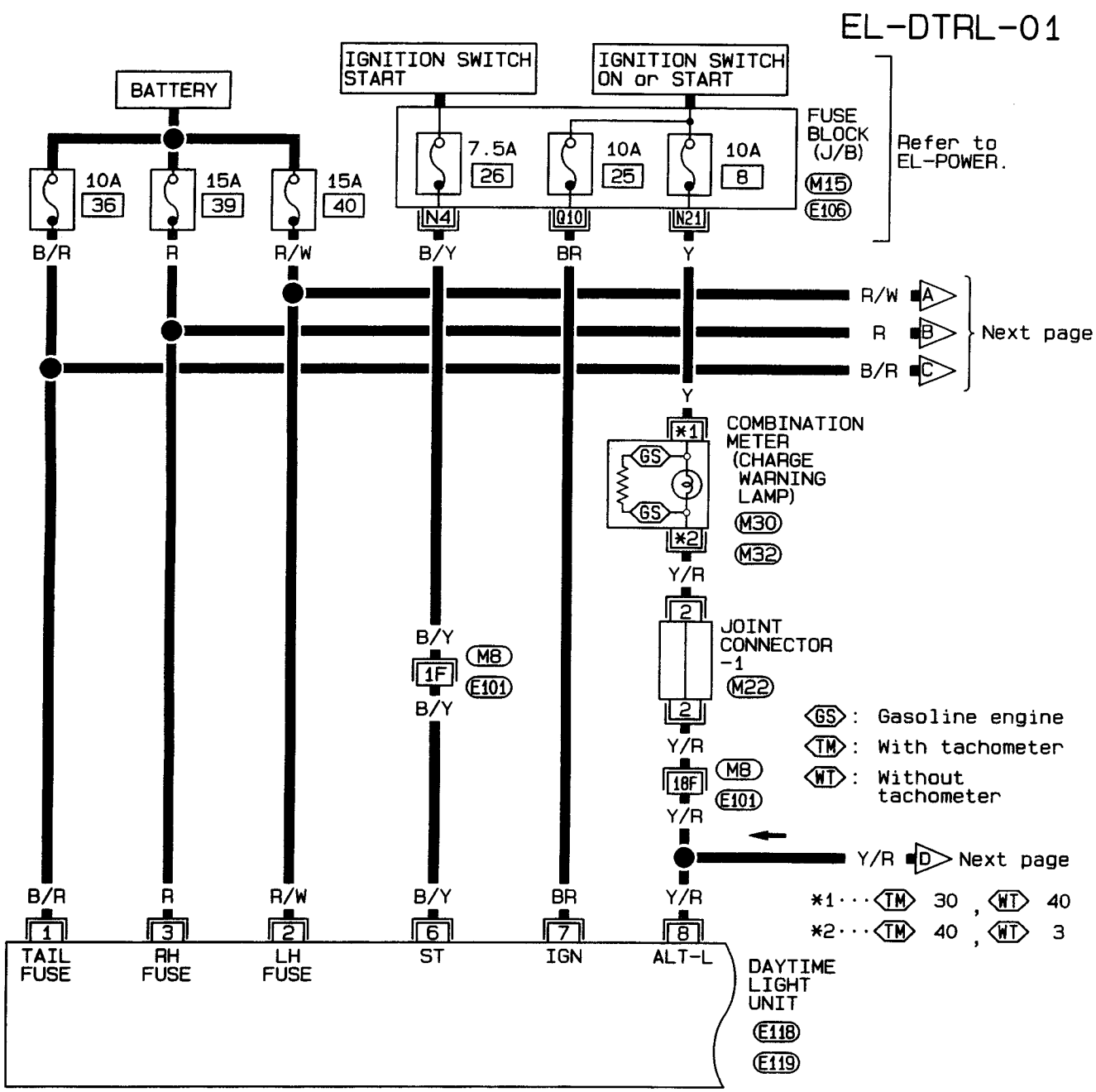

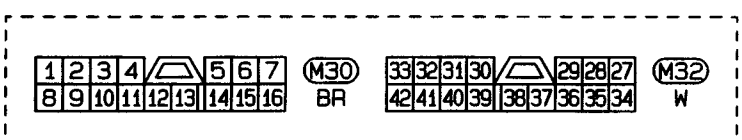

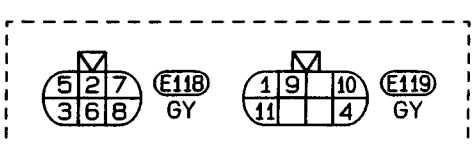

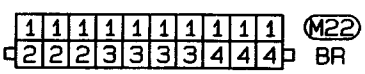

Refer to last page (Foldout page).

M8 , E101

M15 , E106

EL

HEL016

Simpo PDF Merge and Split Unregistered Version - http://www.simpopdf.com

Wiring Diagram — DTRL — (Cont'd)

EL-DTRL-02

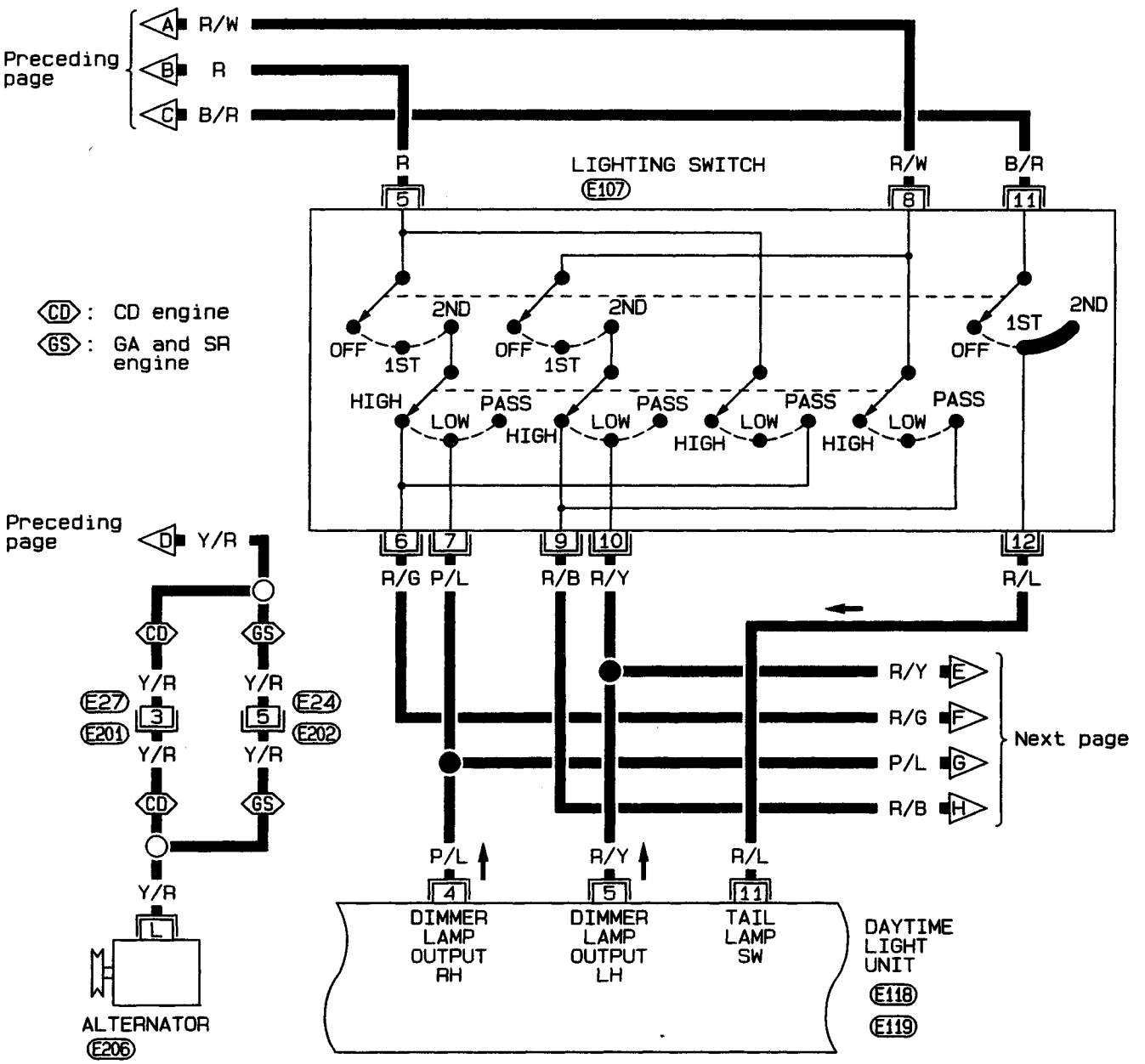

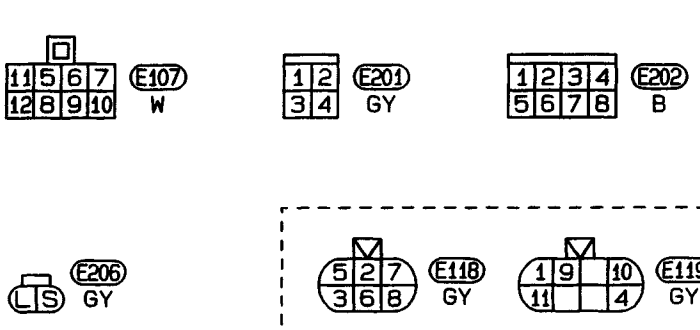

HEL017

Simpo PDF Merge and Split Unregistered Version - http://www.simpopdf.com

Wiring Diagram — DTRL — (Cont'd)

EL-DTRL-03

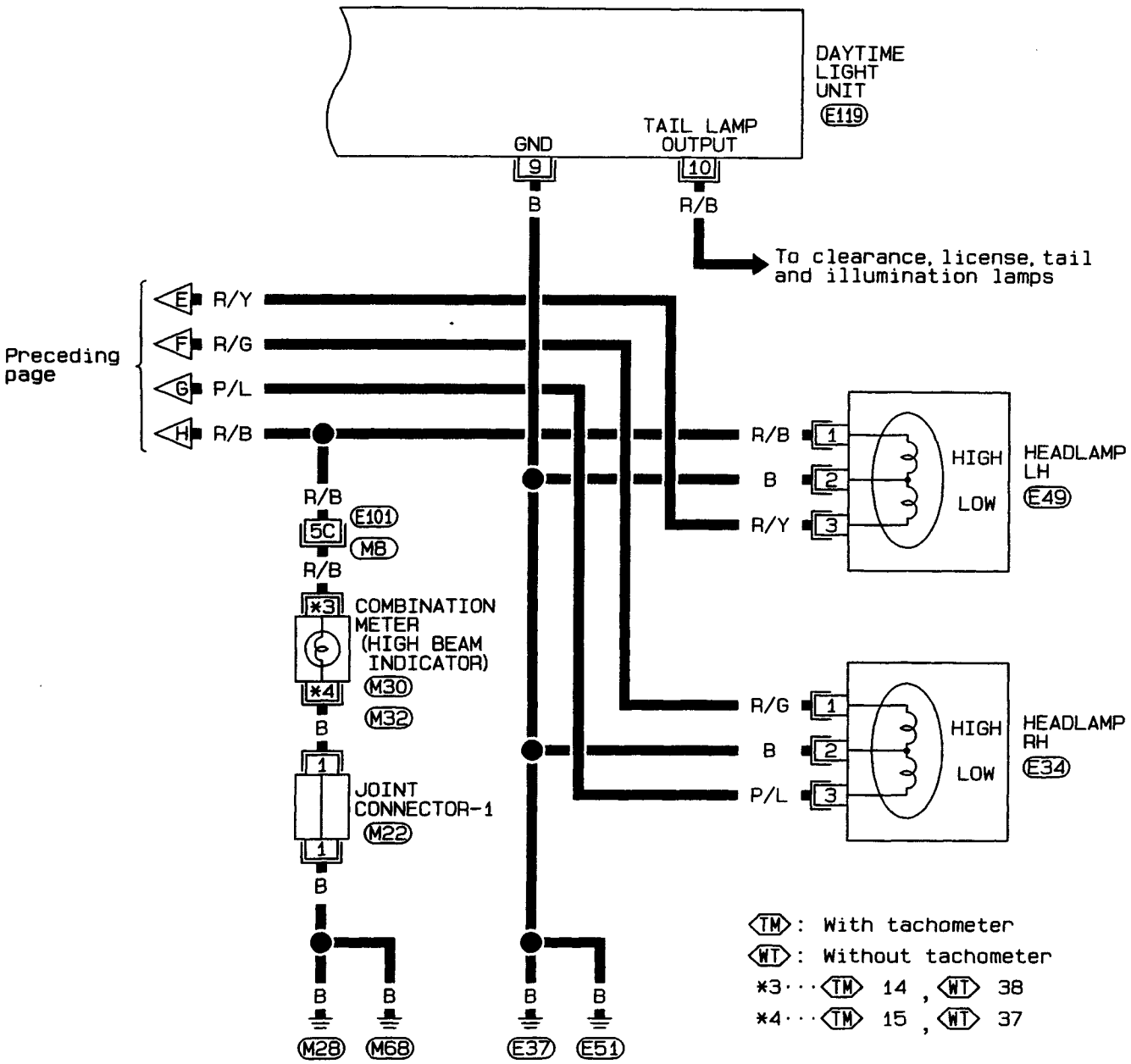

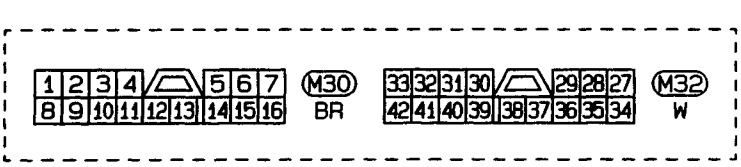

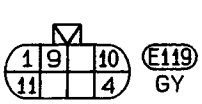



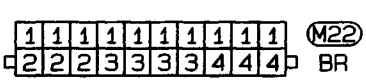

Refer to last page (Foldout page).

M8 , E101

EL

HEL018

Simpo PDF Merge and Split Unregistered Version - http://www.simpopdf.com

Trouble Diagnoses (Daytime Light)

DAYTIME LIGHT CONTROL UNIT INSPECTION TABLE

(Input/output operation signal)

Terminal No.	Connections	INPUT (I)/ OUTPUT (O)	Operated condition		Voltage (V) (Approximate values)
1	Power source for illumination & tail lamp	—	—		12
2	Power source for headlamp LH	—	—		12
3	Power source for headlamp RH	—	—		12
4	Headlamp RH	O	ON (daytime light operating*)		12
			OFF		0
5	Headlamp LH	O	ON (daytime light operating*)		12
			OFF		0
6	Start signal	I	Ignition switch	START	12
				ON, ACC or OFF	0
7	Power source	—	Ignition switch	ON or START	12
				ACC or OFF	0
8	Alternator "L" terminal	I	Engine	Running	12
				Stopped	0
9	Ground	—	—		—
10	Illumination & tail lamp	O	ON (daytime light operating*)		12
			OFF		0
11	Lighting switch	I	1ST·2ND position		12
			OFF		0

*: Daytime light operating: Lighting switch in "OFF" position with engine running.

Simpo PDF Merge and Split Unregistered Version - http://www.simpopdf.com

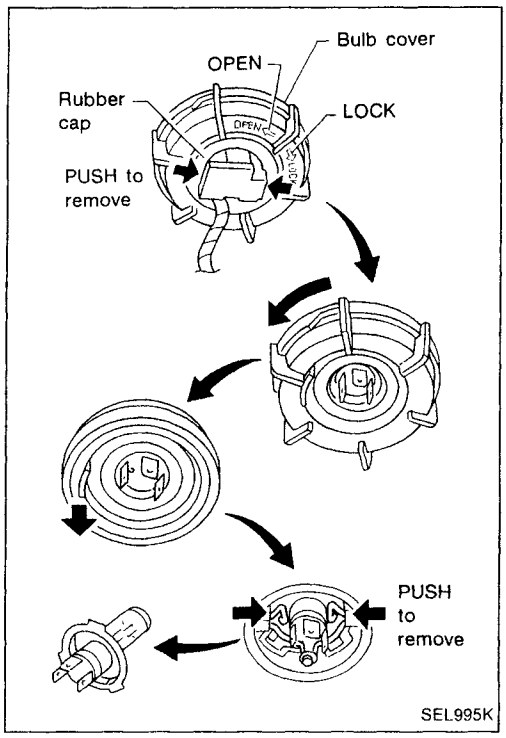

Bulb Replacement

The headlamp is a semi-sealed beam type which uses a replaceable halogen bulb. The bulb can be replaced from the engine compartment side without removing the headlamp body.

- **Grasp only the plastic base when handling the bulb. Never touch the glass envelope.**

1. Disconnect the battery cable.
2. Disconnect the harness connector from the back side of the bulb.
3. Turn the bulb retaining ring counterclockwise until it is free from the headlamp reflector, and then remove it.
4. Pull off the rubber cap.
5. Remove the headlamp bulb carefully. Do not shake or rotate the bulb when removing it.
6. Install in the reverse order of removal.

CAUTION:

- **Do not leave headlamp reflector without bulb for a long period of time. Dust, moisture, smoke, etc. entering headlamp body may affect the performance of the headlamp. Remove headlamp bulb from the headlamp reflector just before a replacement bulb is installed.**

Bulb Specifications

Item	Wattage (W)
Semi-sealed beam	
High/Low	60/55

Aiming Adjustment

When performing headlamp aiming adjustment, use an aiming machine, aiming wall screen or headlamp tester. Aimers should be in good repair, calibrated and operated in accordance with respective operation manuals.
If any aimer is not available, aiming adjustment can be done as follows:
For details, refer to the regulations in your own country.
CAUTION:

- **Keep all tires inflated to correct pressures.**
- **Place vehicle and tester on one and same flat surface.**
- **See that vehicle is unloaded (except for full levels of coolant, engine oil and fuel, and spare tire, jack and tools). Have the driver or equivalent weight placed in driver's seat.**

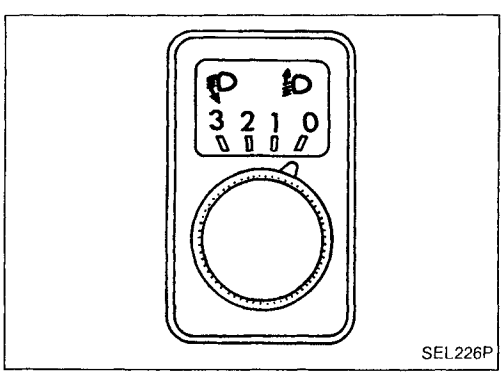

CAUTION:
Be sure aiming switch is set to "0" when performing aiming adjustment on vehicles equipped with headlamp aiming control.

EL

Simpo PDF Merge and Split Unregistered Version - http://www.simpopdf.com

Aiming Adjustment (Cont'd)

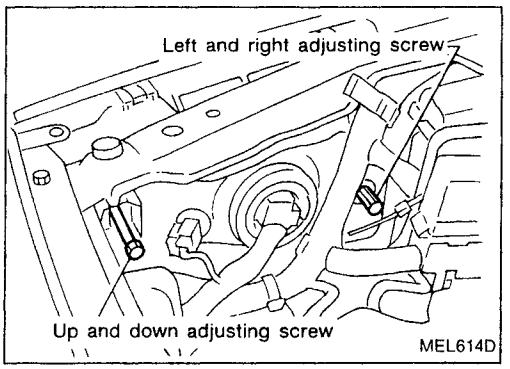

LOW BEAM

1. Turn headlamp low beam on.
2. Use adjusting screws to perform aiming adjustment.

- **First tighten the adjusting screw all the way and then make adjustment by loosening the screw.**

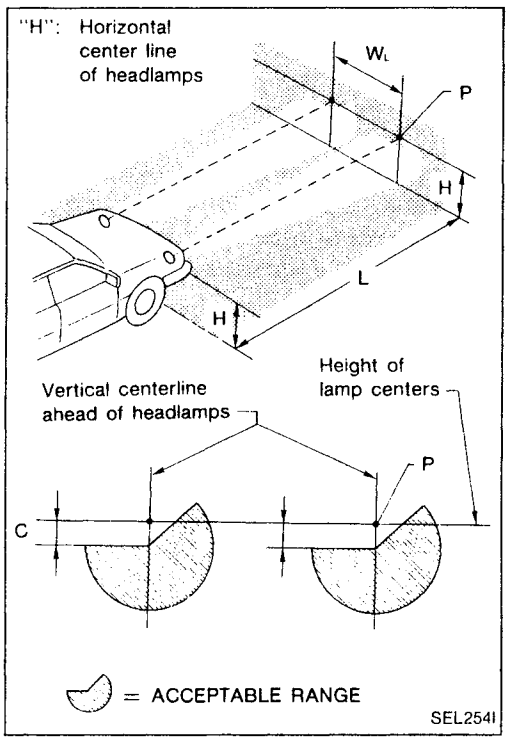

- **Adjust headlamps so that main axis of light is parallel to center line of body and is aligned with point P shown in illustration.**
- **Figure to the left shows headlamp aiming pattern for driving on right side of road; for driving on left side of road, aiming pattern is reversed.**
- **Dotted lines in illustration show center of headlamp.**

"H": Horizontal center line of headlamps
"W_L": Distance between each headlamp center
"L": 5,000 mm (196.85 in)
"C": 65 mm (2.56 in)

Simpo PDF Merge and Split Unregistered Version - http://www.simpopdf.com

Wiring Diagram — AIM —

LHD MODELS

EL-AIM-01

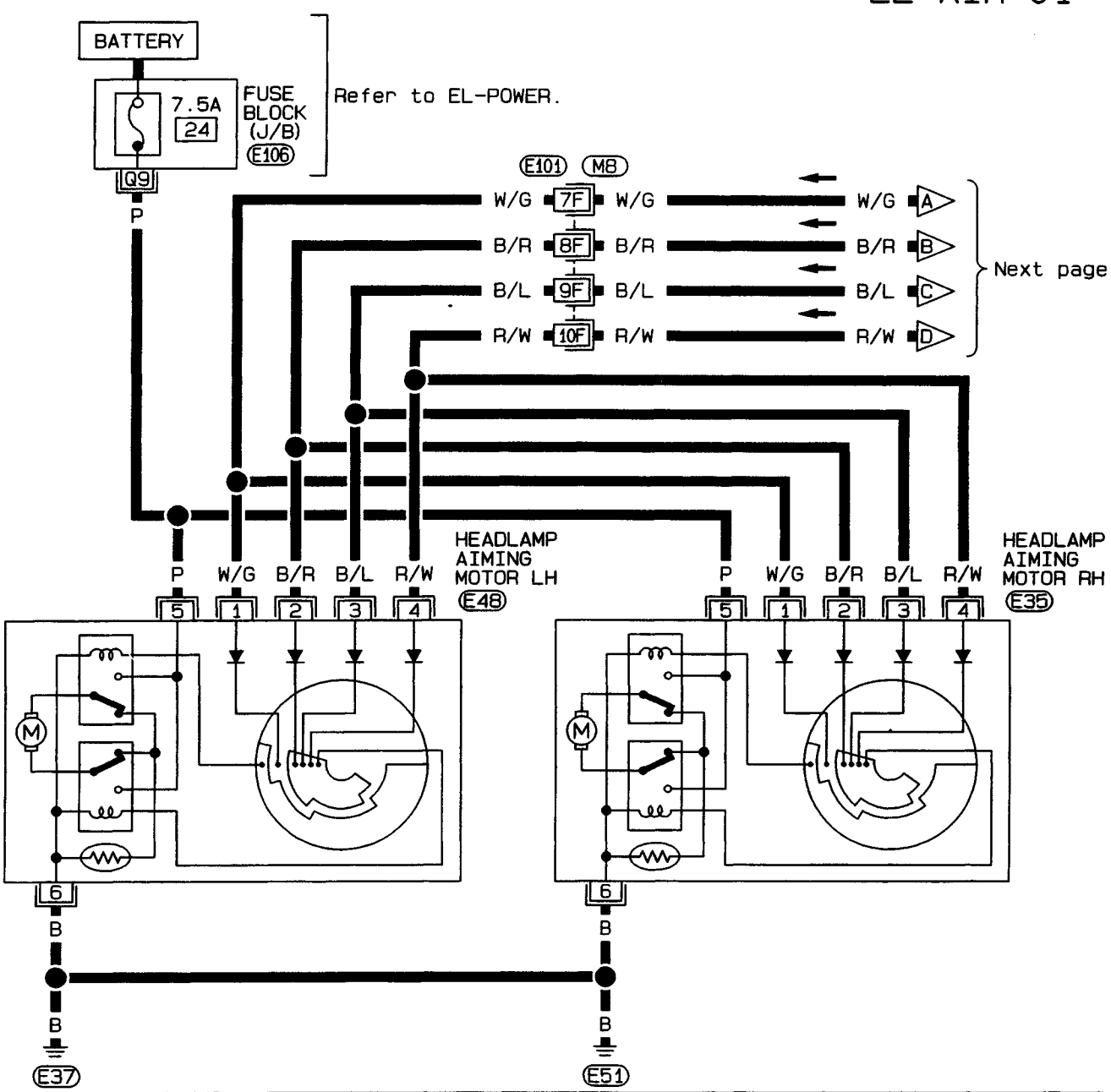

1 2 3 4 5 6 E35 GY , E48 GY

Refer to last page (Foldout page).

M8 , E101

E106

EL

HEL019

Simpo PDF Merge and Split Unregistered Version - http://www.simpopdf.com

Wiring Diagram — AIM — (Cont'd)

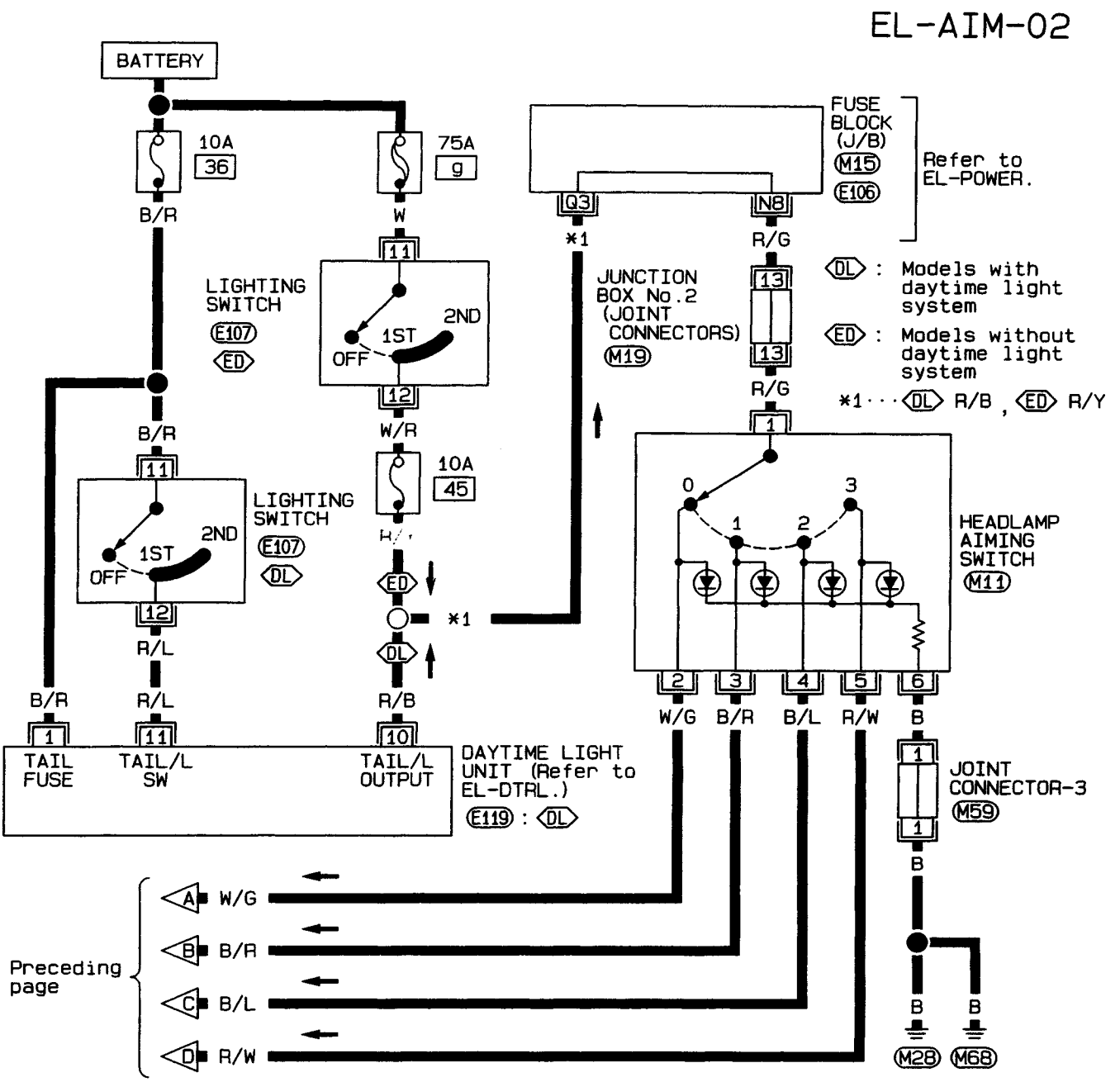

Refer to last page (Foldout page).

M15 , E106

M19

HEL020

Simpo PDF Merge and Split Unregistered Version - http://www.simpopdf.com

Wiring Diagram — AIM — (Cont'd)

RHD MODELS

EL-AIM-03

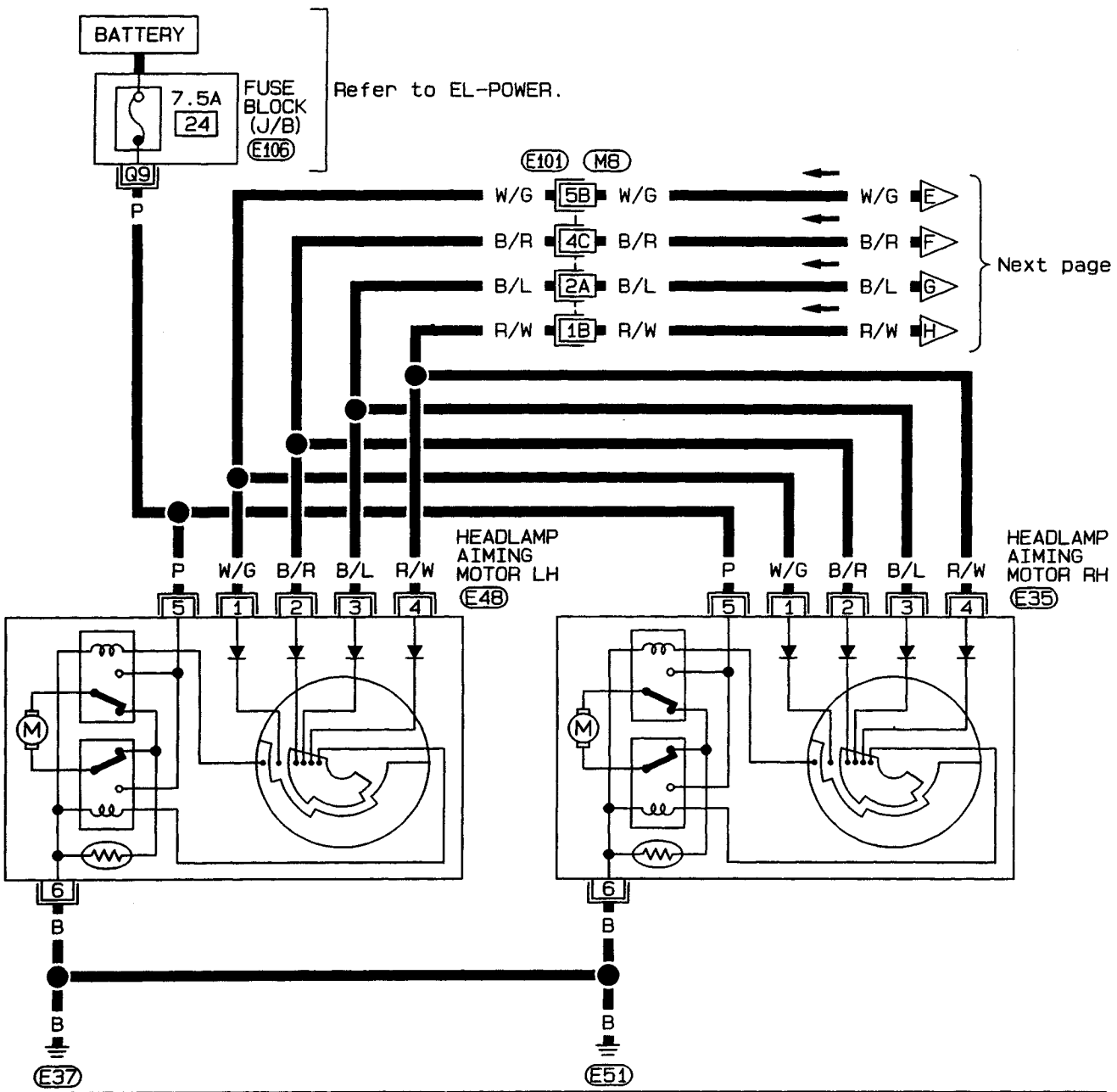



Refer to last page (Foldout page).

M8 , E101

E106

EL

HEL021

Simpo PDF Merge and Split Unregistered Version - http://www.simpopdf.com

Wiring Diagram — AIM — (Cont'd)

EL-AIM-04

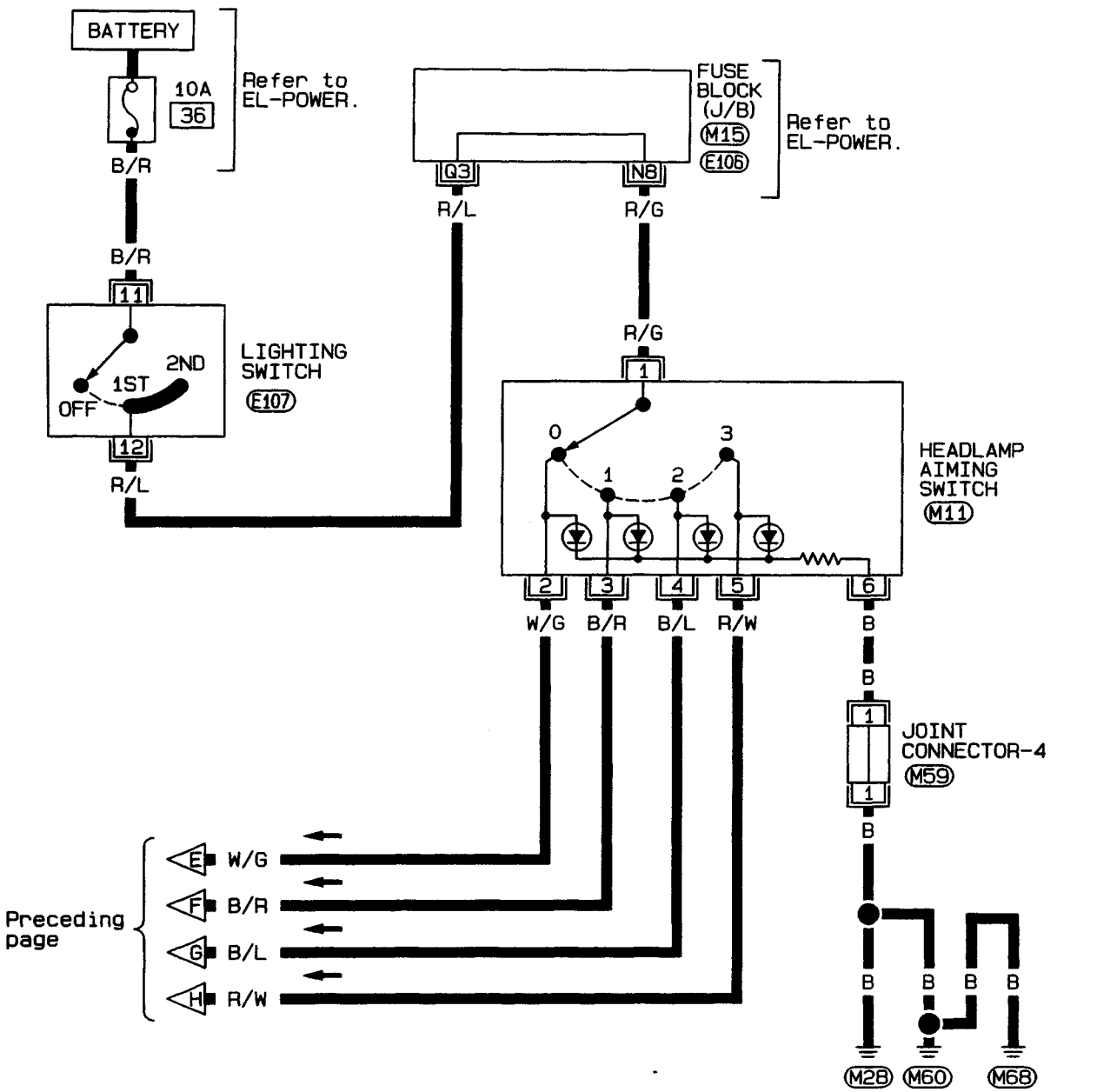

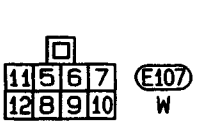

E107
W

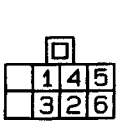

M11
W

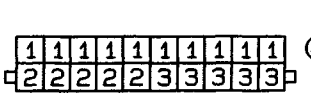

M59
P

Refer to last page (Foldout page).

M15, E106

HEL022

Simpo PDF Merge and Split Unregistered Version - http://www.simpopdf.com

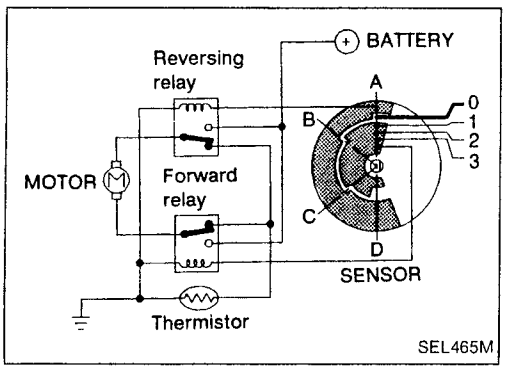

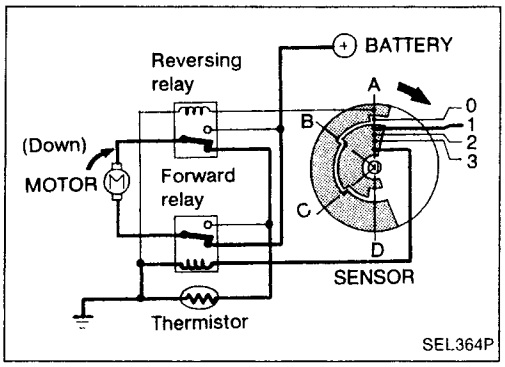

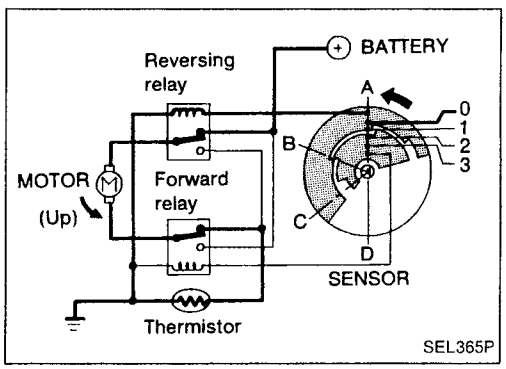

Description

CIRCUIT OPERATION

[Example]

Aiming switch "0"

- When the aiming switch is set to "0", the motor will not start. This is because the power terminals are positioned at the nonconductive section of the sensor's rotary unit.

Aiming switch "0" → "1"

- When the aiming switch is moved from "0" to "1", the sensor's conductive section activates the relay. Power is supplied through the relay to the motor. The headlamps will then move in the "DOWN" direction.
- The motor continues to rotate while the rotary unit of the sensor moves from point A to point B.
- The power terminals will then be positioned at the nonconductive section, disconnecting the power to the motor. The motor will then stop.

Aiming switch "1" → "0"

- When the aiming switch is moved from "1" to "0", the sensor's conductive section activates the relay. Power is supplied through the relay to the motor. The motor will rotate to move the headlamps in the "UP" direction.
- When the rotary unit of the sensor moves from point B to point A, the motor will stop.

EL

Simpo PDF Merge and Split Unregistered Version - http://www.simpopdf.com

Clearance, License and Tail Lamps/Schematic

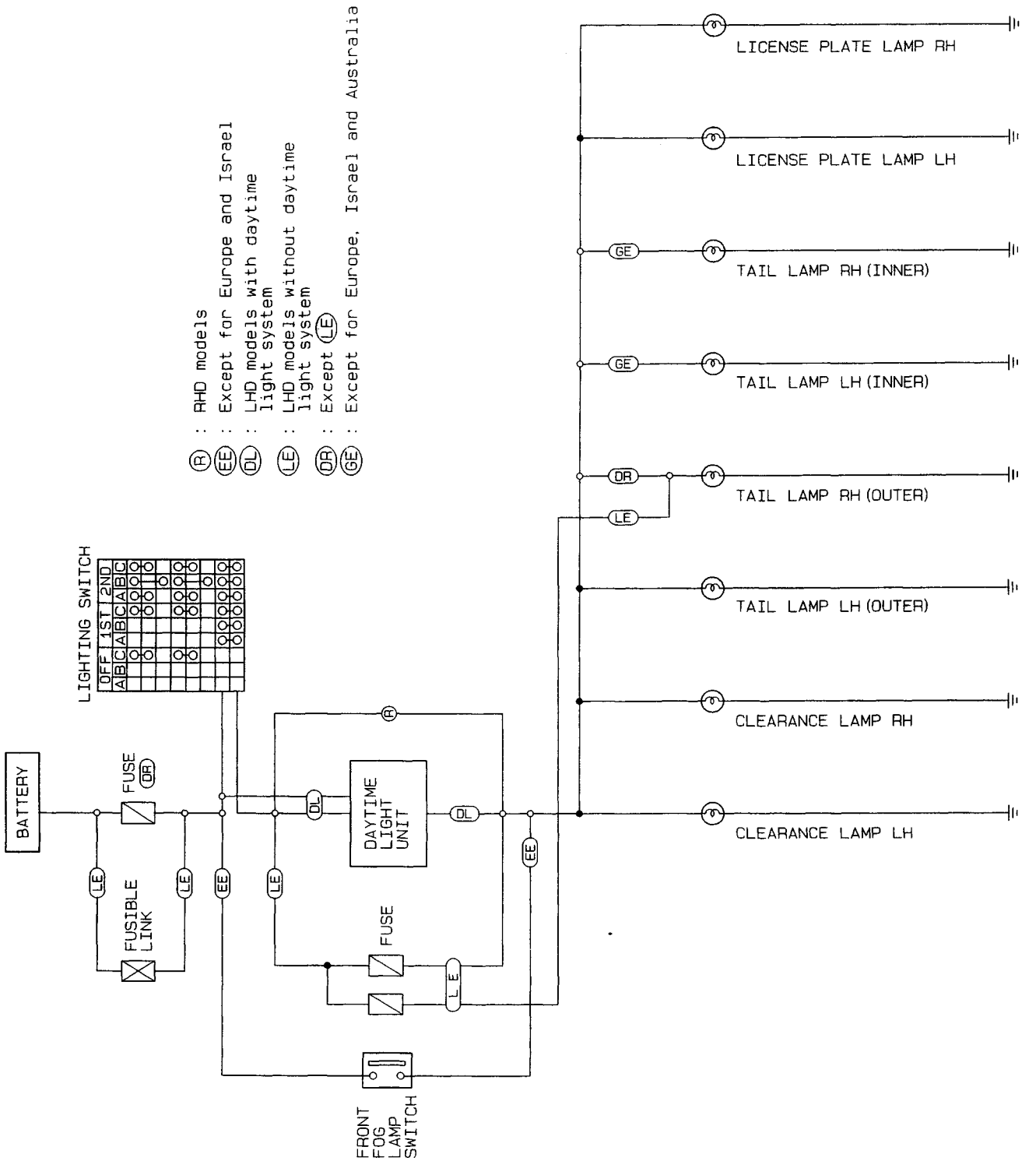

HEL032

Simpo PDF Merge and Split Unregistered Version - http://www.simpopdf.com

Clearance, License and Tail Lamps/Wiring Diagram — TAIL/L —

LHD MODELS WITH DAYTIME LIGHT SYSTEM

EL-TAIL/L-01

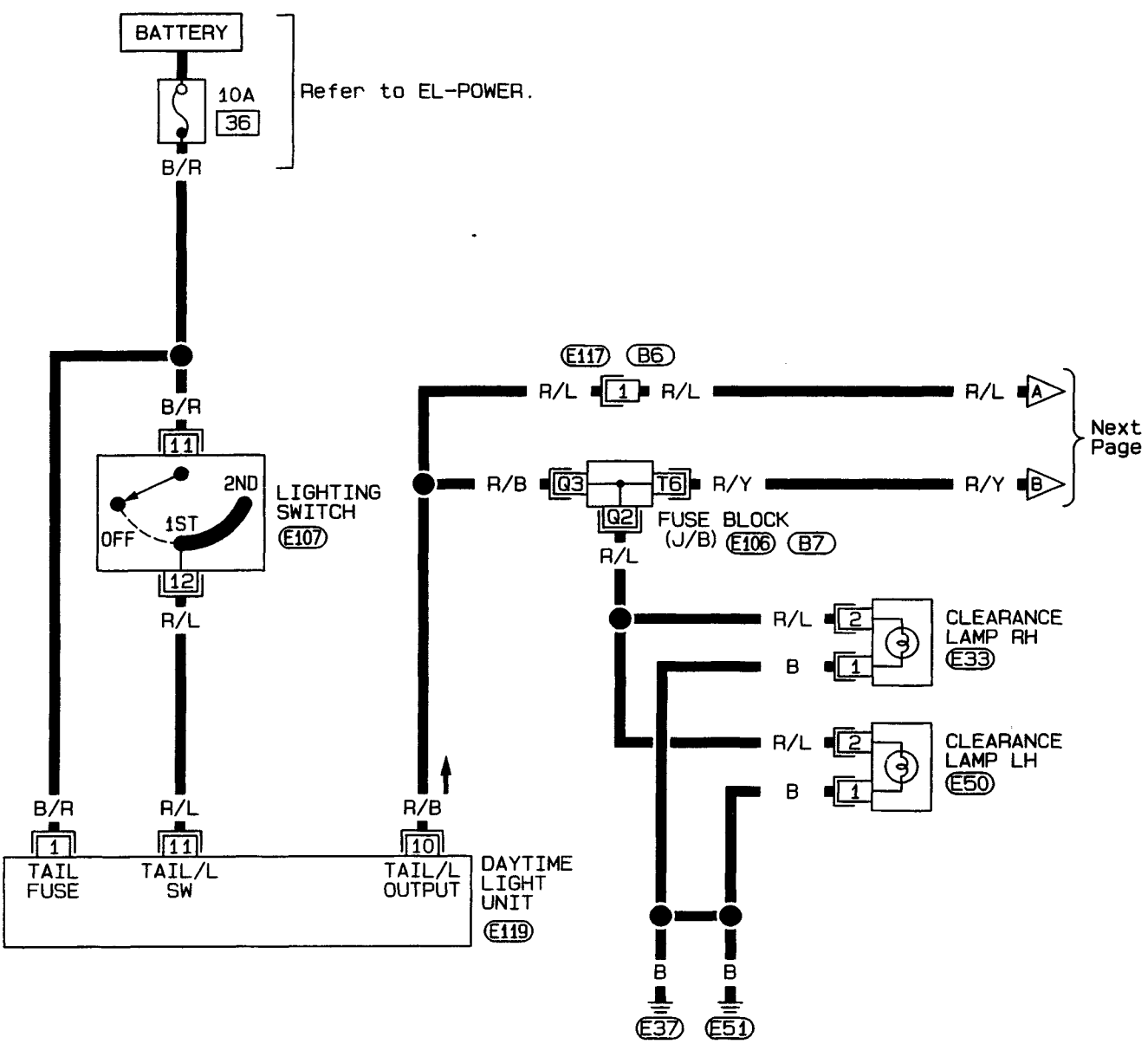

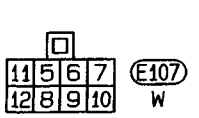

E107 W

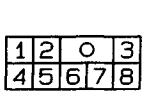

E117 W



E33 B , E50 B

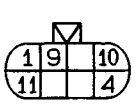

E119 GY

Refer to last page (Foldout page).

E106 , B7

HEL023

EL

Simpo PDF Merge and Split Unregistered Version - http://www.simpopdf.com

Clearance, License and Tail Lamps/Wiring Diagram — TAIL/L — (Cont'd)

EL-TAIL/L-02

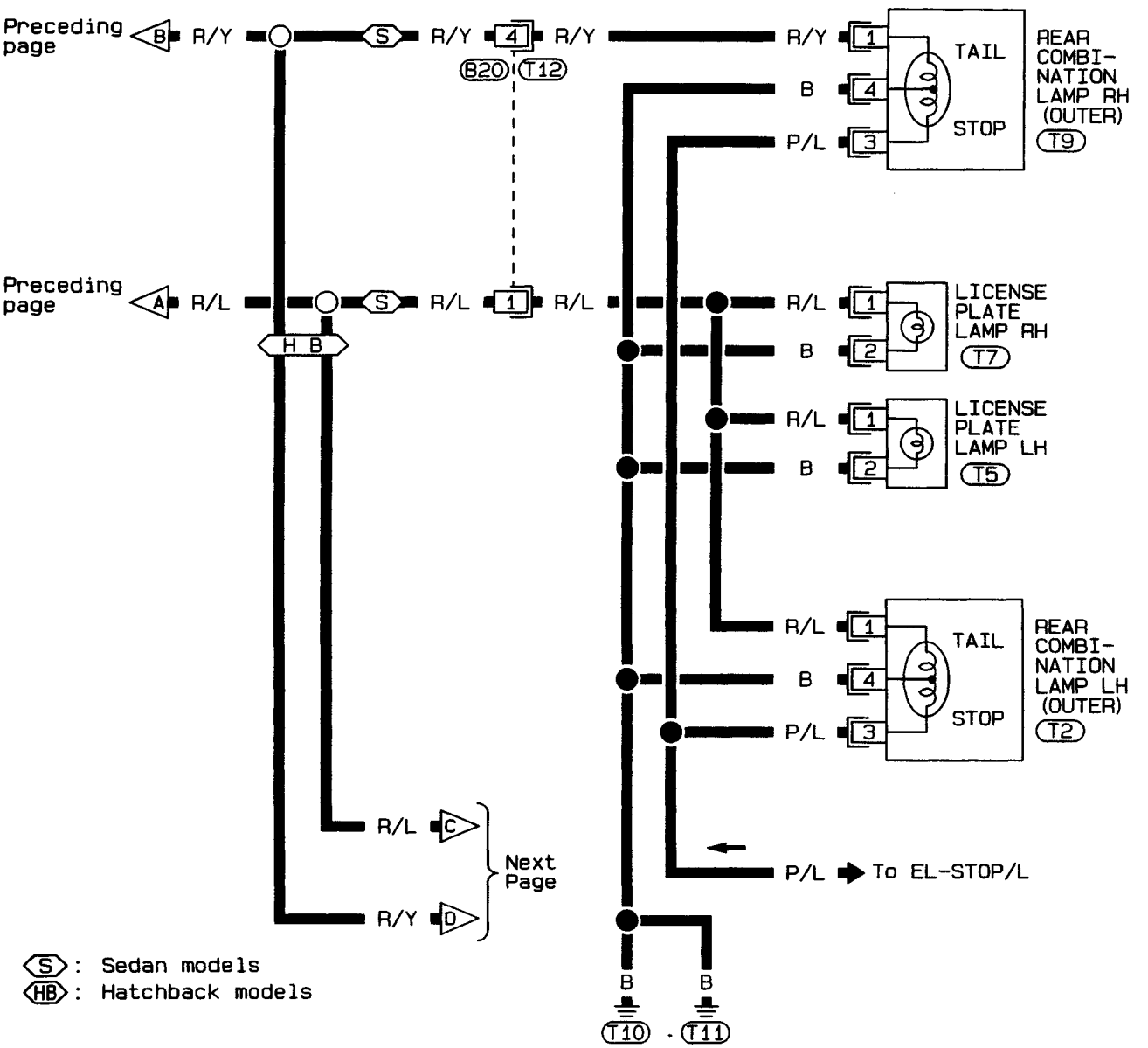

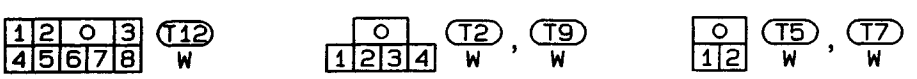

HEL024

Simpo PDF Merge and Split Unregistered Version - http://www.simpopdf.com

Clearance, License and Tail Lamps/Wiring Diagram — TAIL/L — (Cont'd)

EL-TAIL/L-03

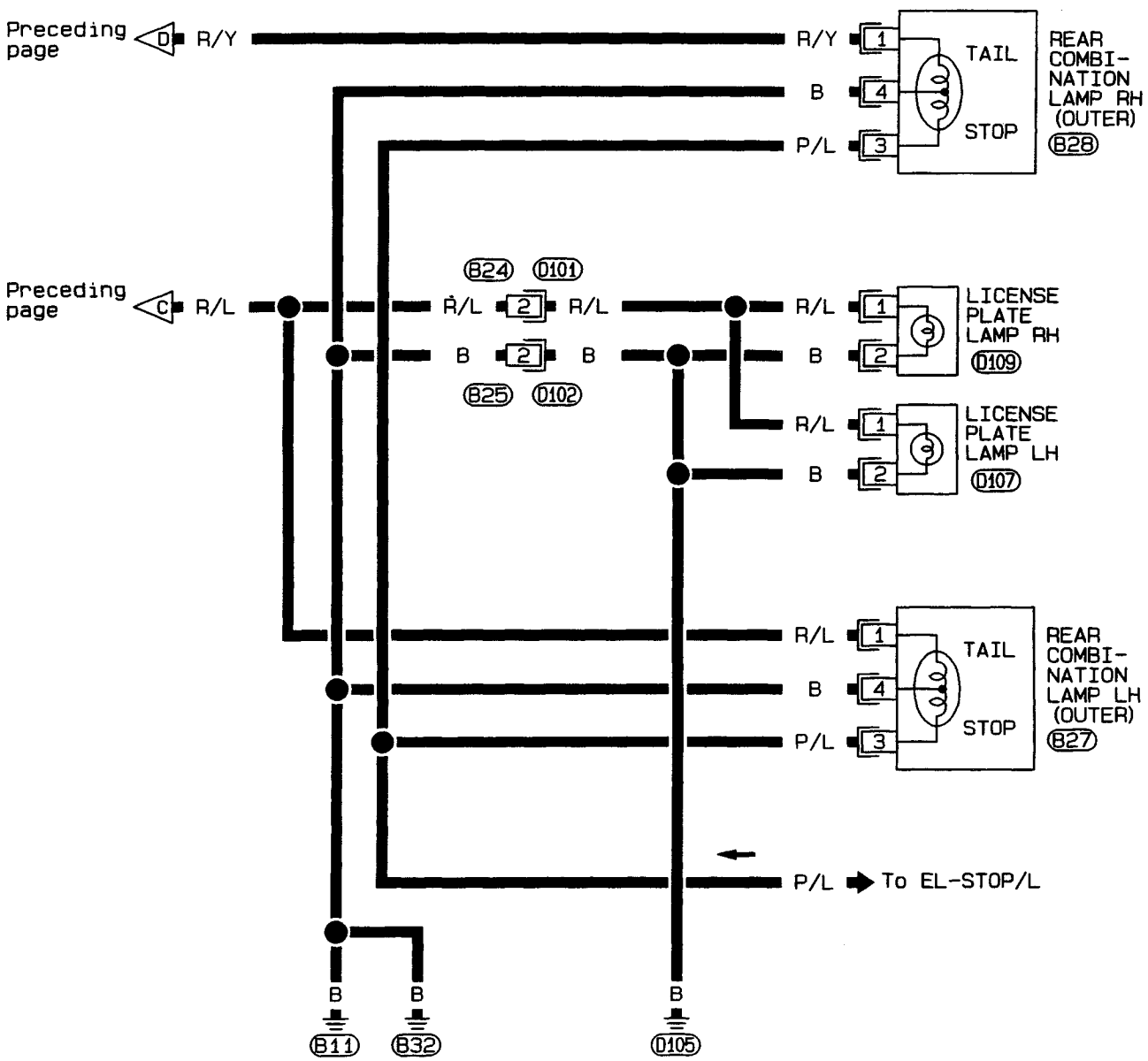

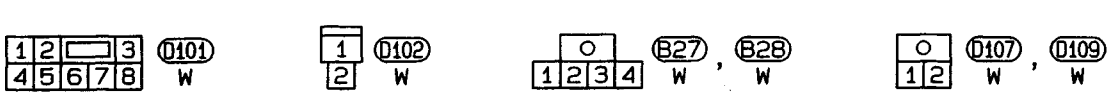

EL

HEL025

Simpo PDF Merge and Split Unregistered Version - http://www.simpopdf.com

Clearance, License and Tail Lamps/Wiring Diagram — TAIL/L — (Cont'd)

LHD MODELS WITHOUT DAYTIME LIGHT SYSTEM

EL-TAIL/L-04

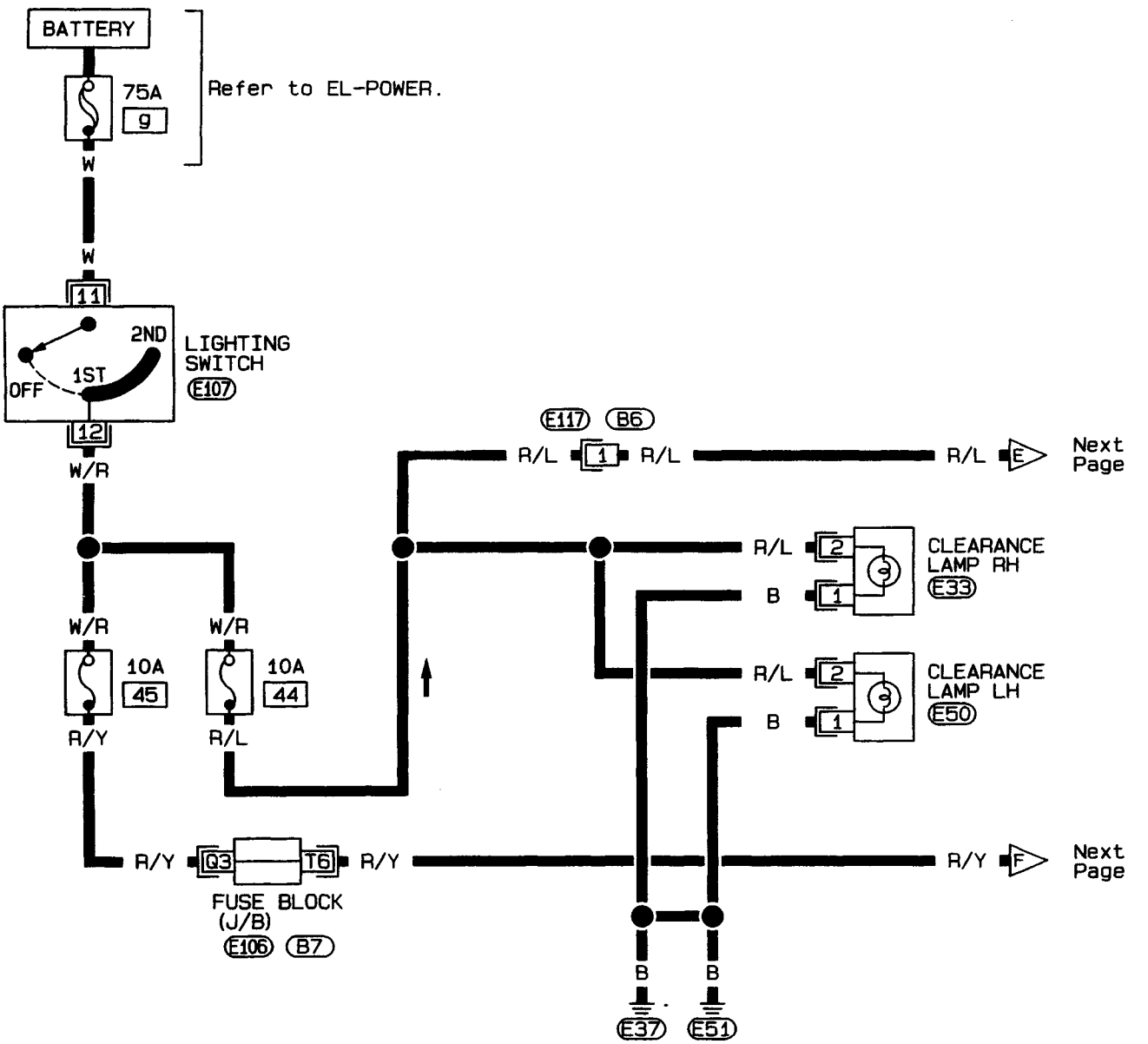

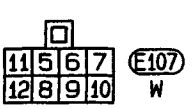

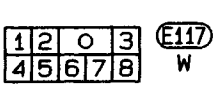



Refer to last page (Foldout page).

E106, B7

Simpo PDF Merge and Split Unregistered Version - http://www.simpopdf.com

Clearance, License and Tail Lamps/Wiring Diagram — TAIL/L — (Cont'd)

EL-TAIL/L-05

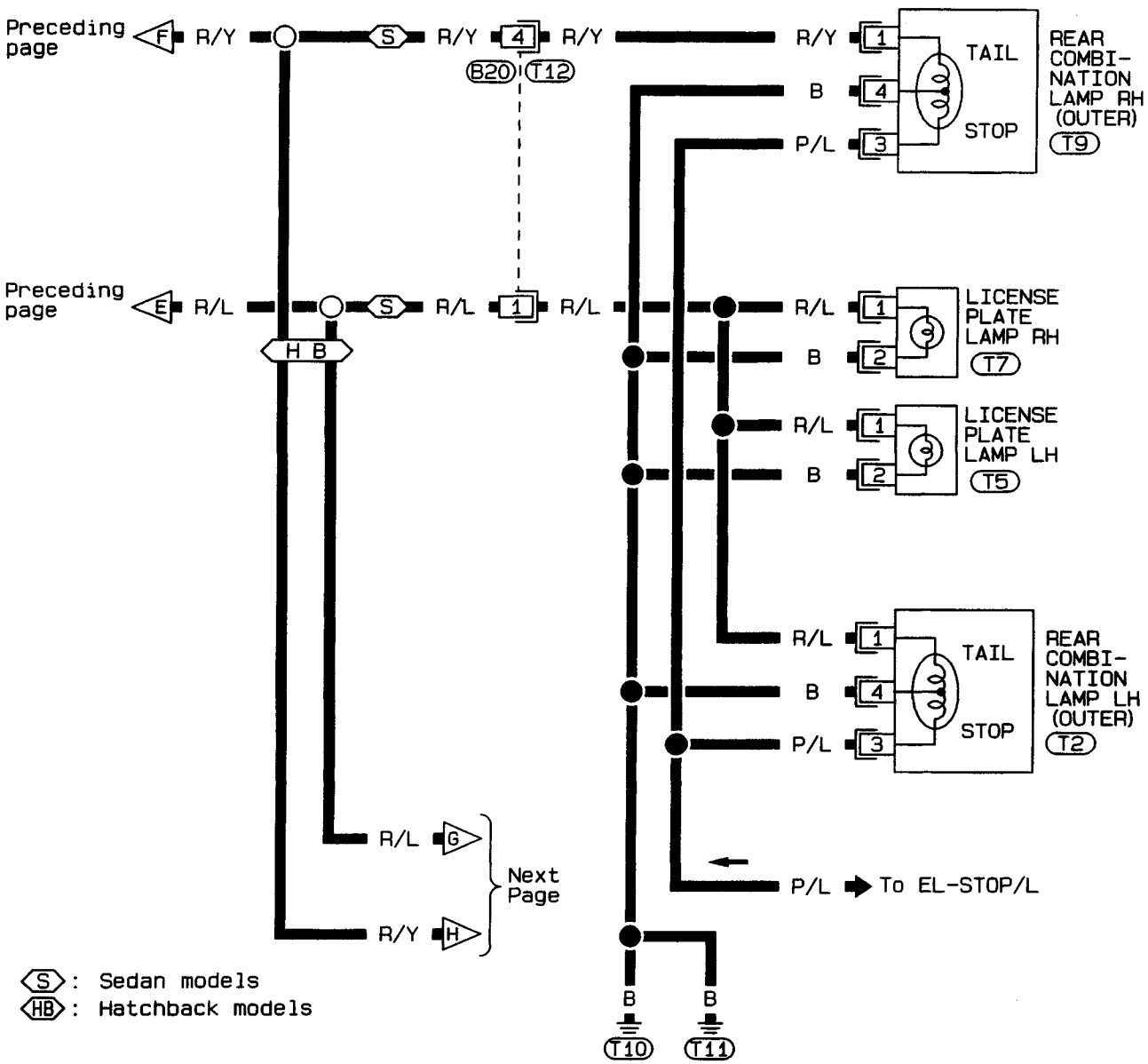

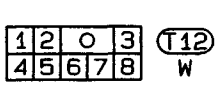

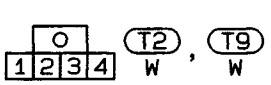

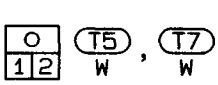

EL

HEL027

Simpo PDF Merge and Split Unregistered Version - http://www.simpopdf.com

Clearance, License and Tail Lamps/Wiring Diagram — TAIL/L — (Cont'd)

EL-TAIL/L-06

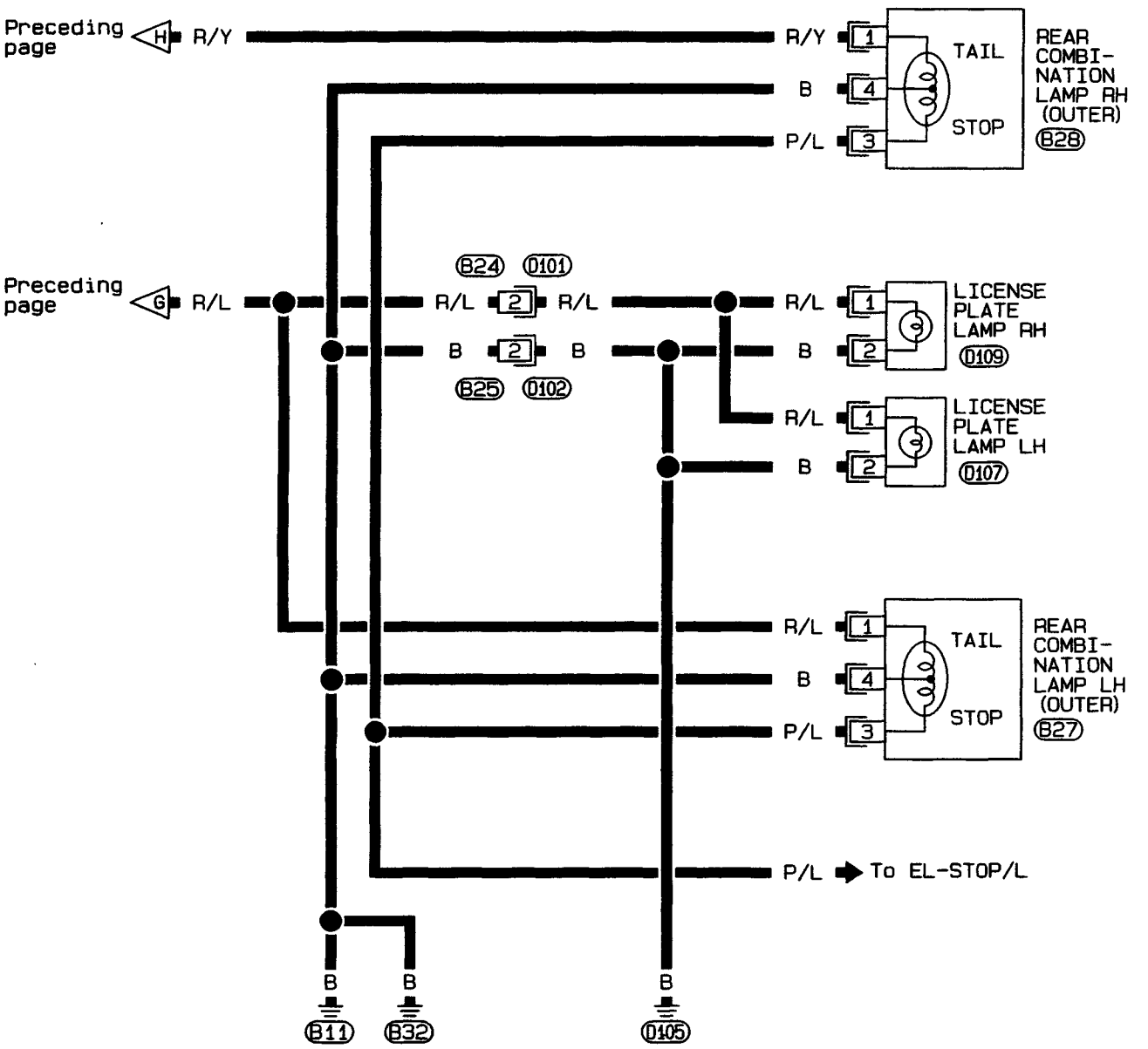

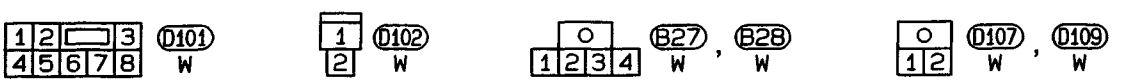

HEL028

Simpo PDF Merge and Split Unregistered Version - http://www.simpopdf.com

Clearance, License and Tail Lamps/Wiring Diagram — TAIL/L — (Cont'd)

RHD MODELS

EL-TAIL/L-07

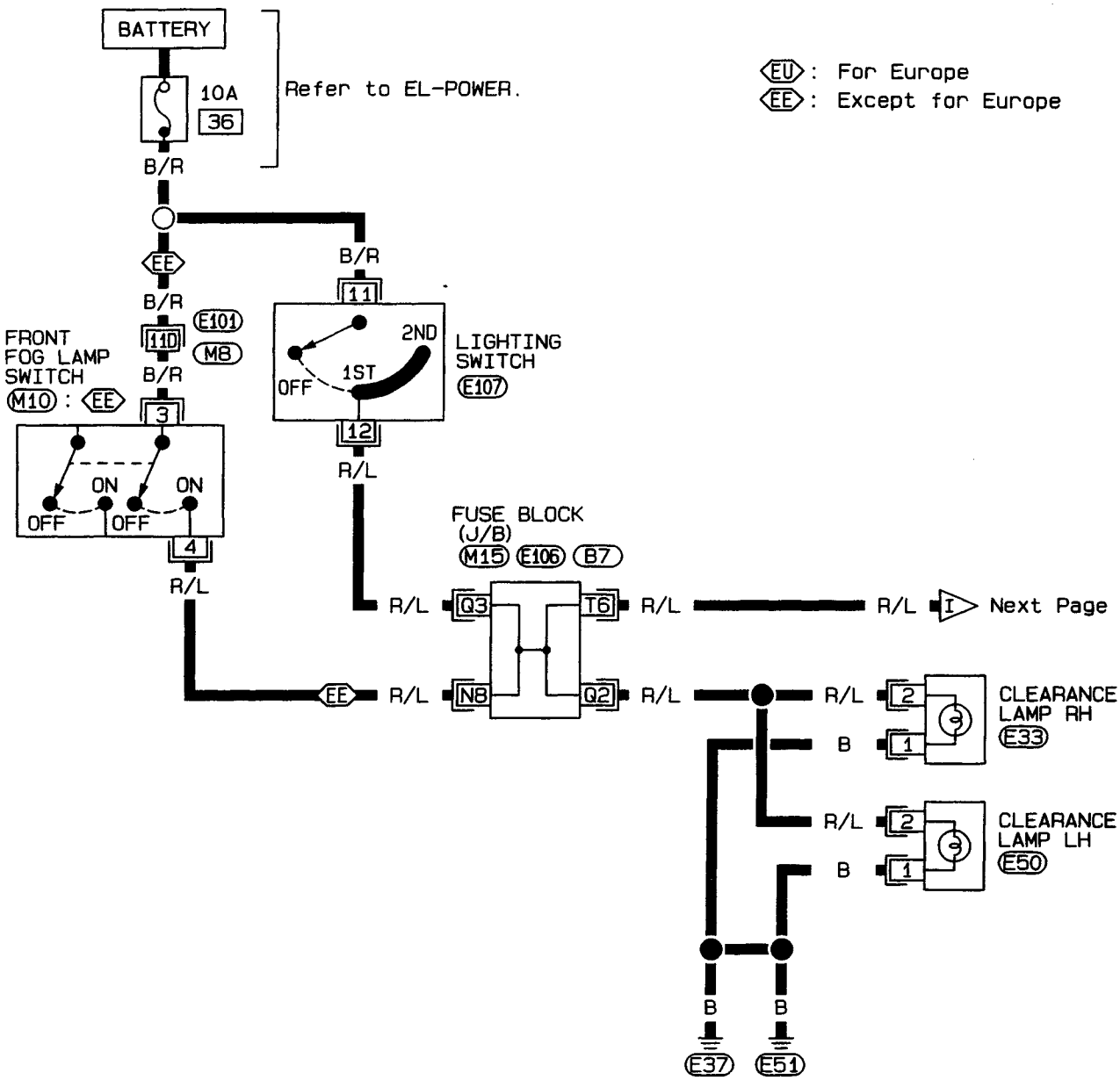

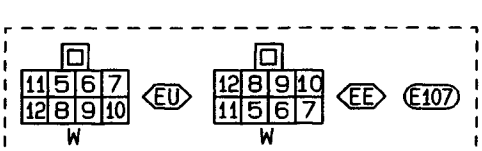

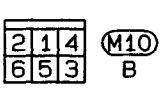

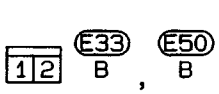

Refer to last page (Foldout page).

M8, E101
M15, E106, B7

EL

HEL029

Simpo PDF Merge and Split Unregistered Version - http://www.simpopdf.com

Clearance, License and Tail Lamps/Wiring Diagram — TAIL/L — (Cont'd)

EL-TAIL/L-08

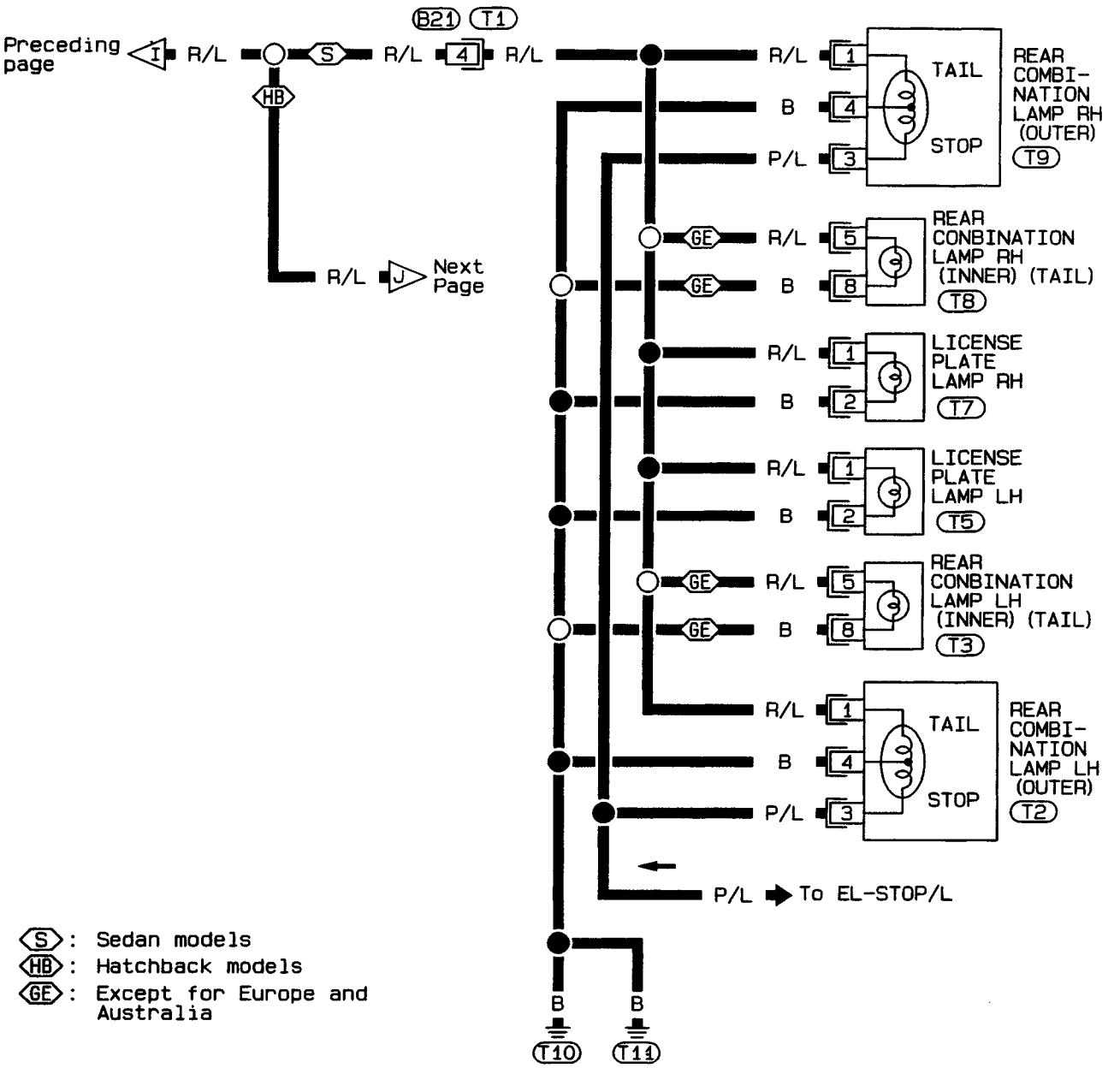



HEL030

Simpo PDF Merge and Split Unregistered Version - http://www.simpopdf.com

Clearance, License and Tail Lamps/Wiring Diagram — TAIL/L — (Cont'd)

EL-TAIL/L-09

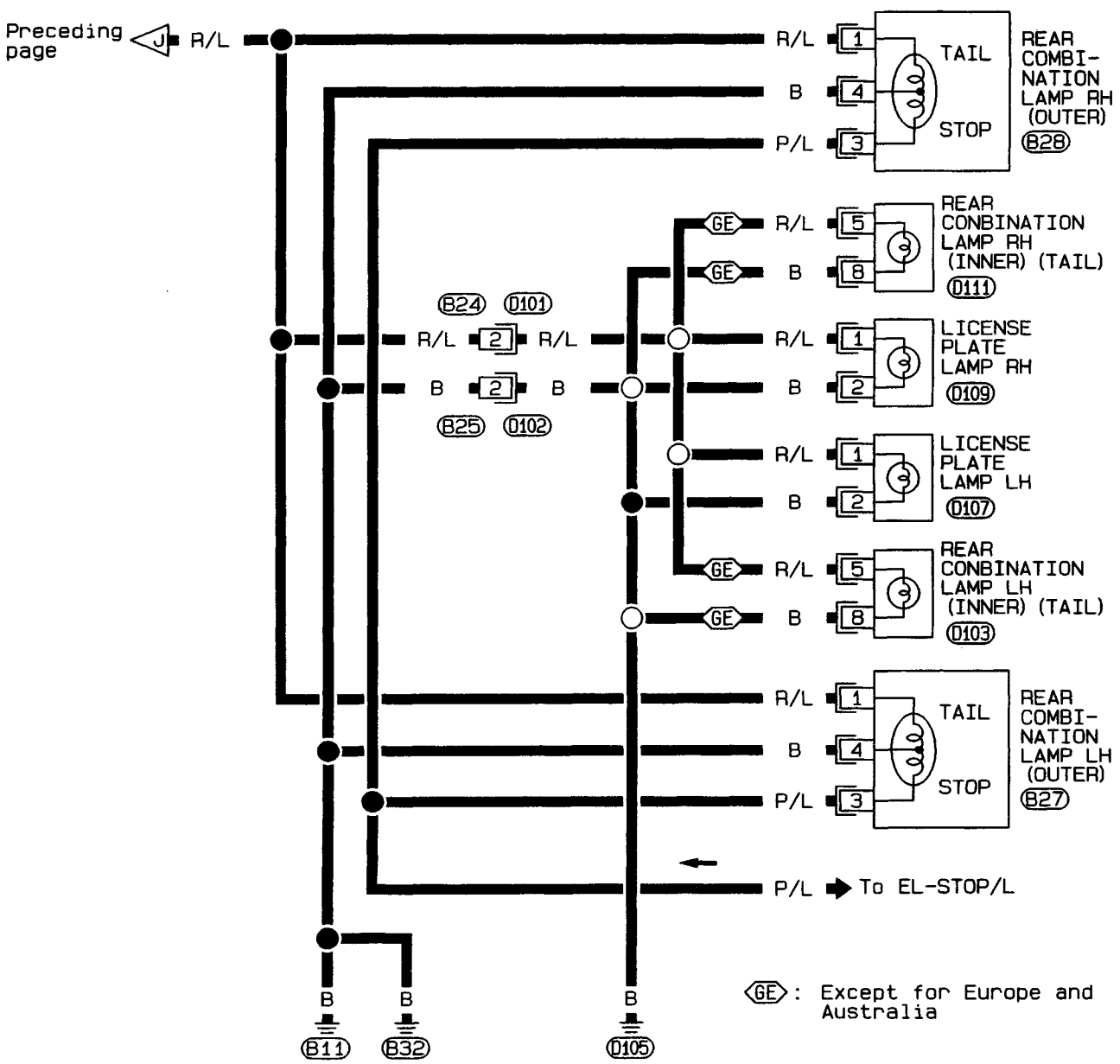

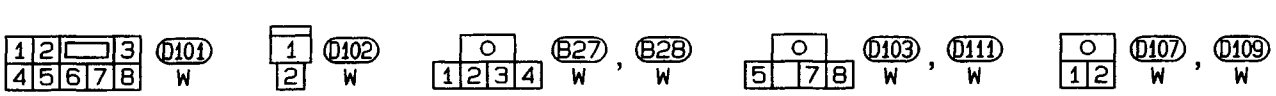

EL

HEL031

Simpo PDF Merge and Split Unregistered Version - http://www.simpopdf.com

Stop Lamp/Wiring Diagram — STOP/L —

SEDAN MODELS

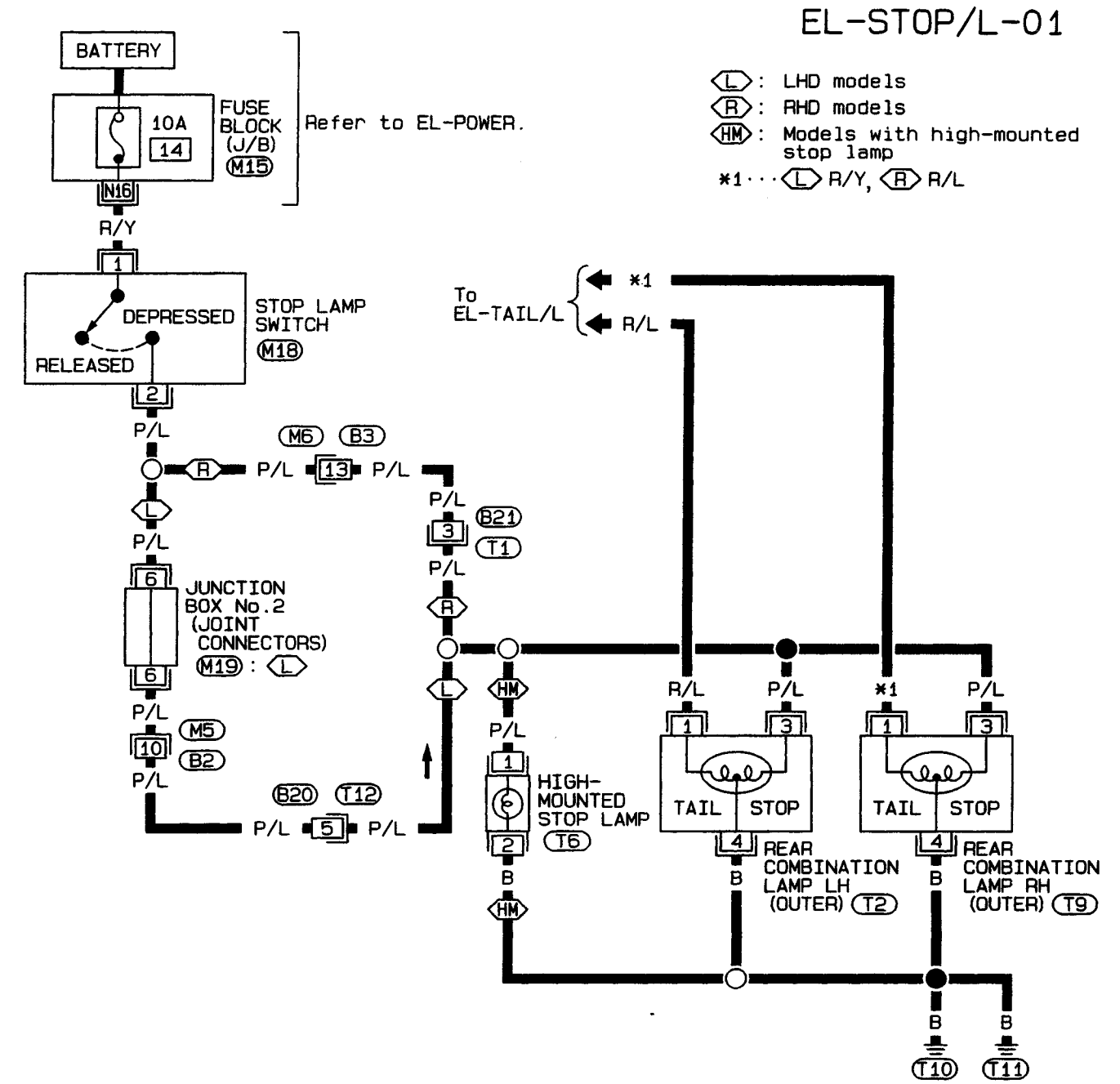

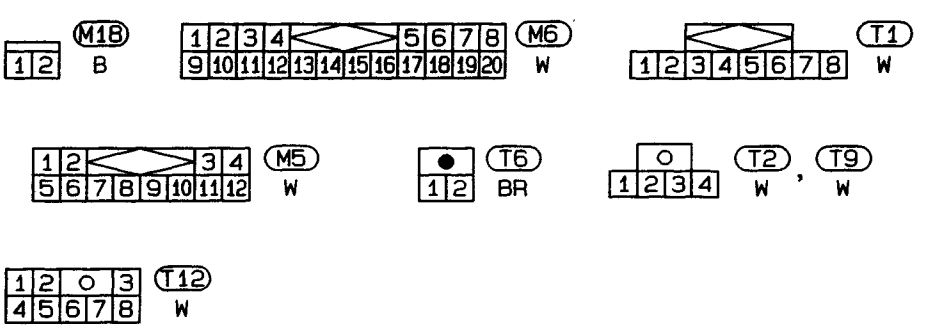

Refer to last page (Foldout page).

M15

M19

HEL033

Simpo PDF Merge and Split Unregistered Version - http://www.simpopdf.com

HATCHBACK MODELS

Stop Lamp/Wiring Diagram — STOP/L — (Cont'd)

EL-STOP/L-02

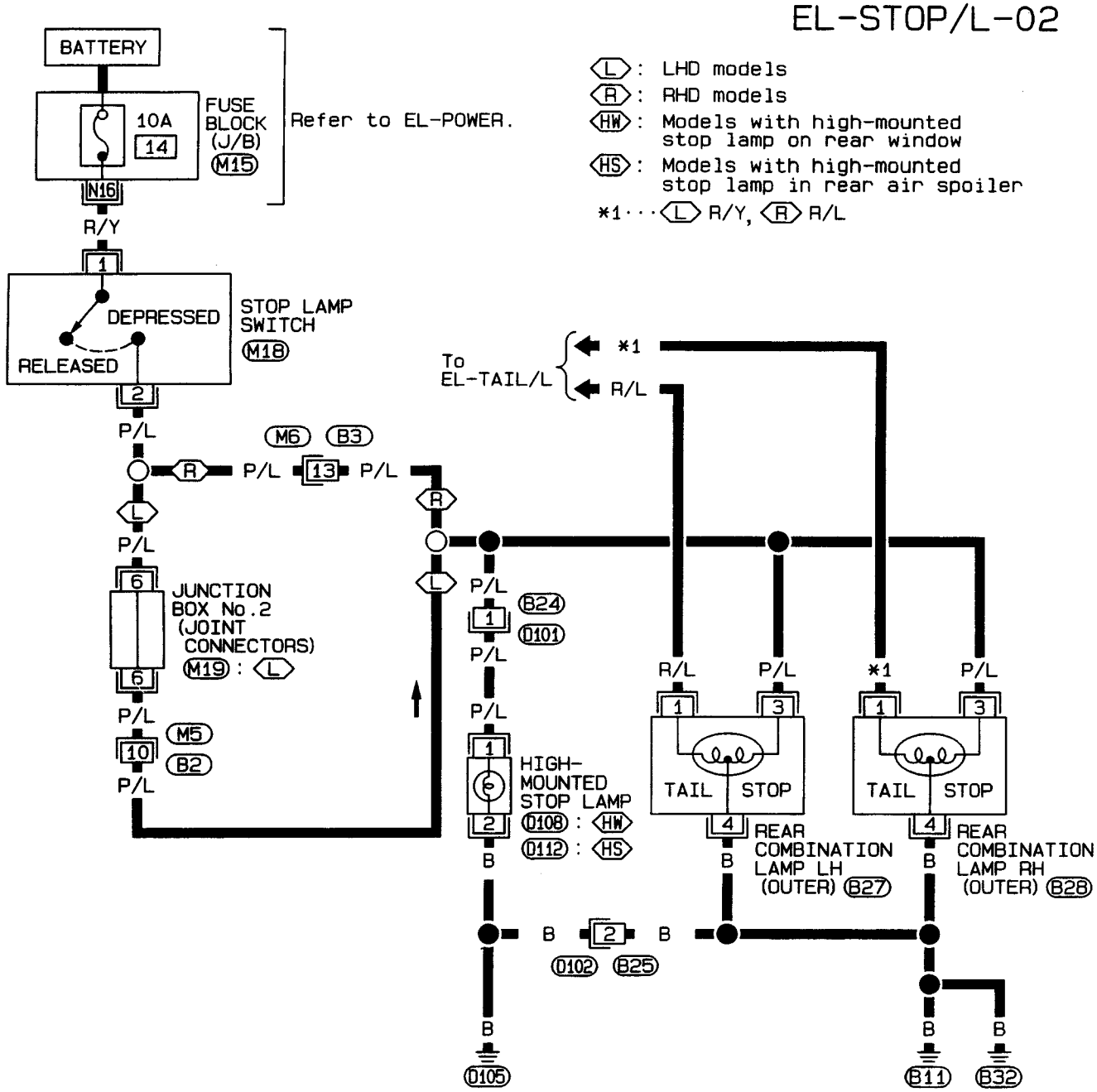

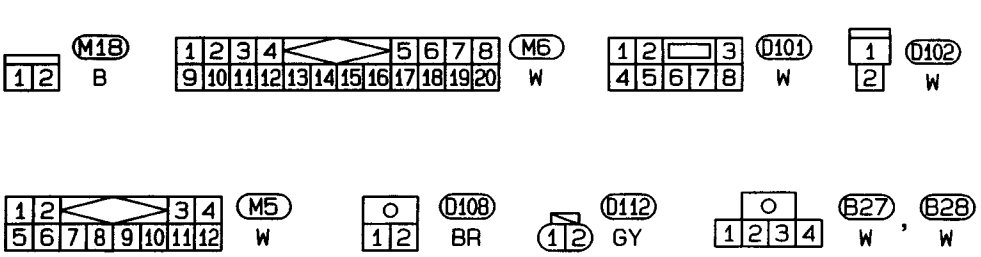

Refer to last page (Foldout page).
M15
M19

EL

HEL034

Simpo PDF Merge and Split Unregistered Version - http://www.simpopdf.com

Back-up Lamp/Wiring Diagram — BACK/L —

EL-BACK/L-01

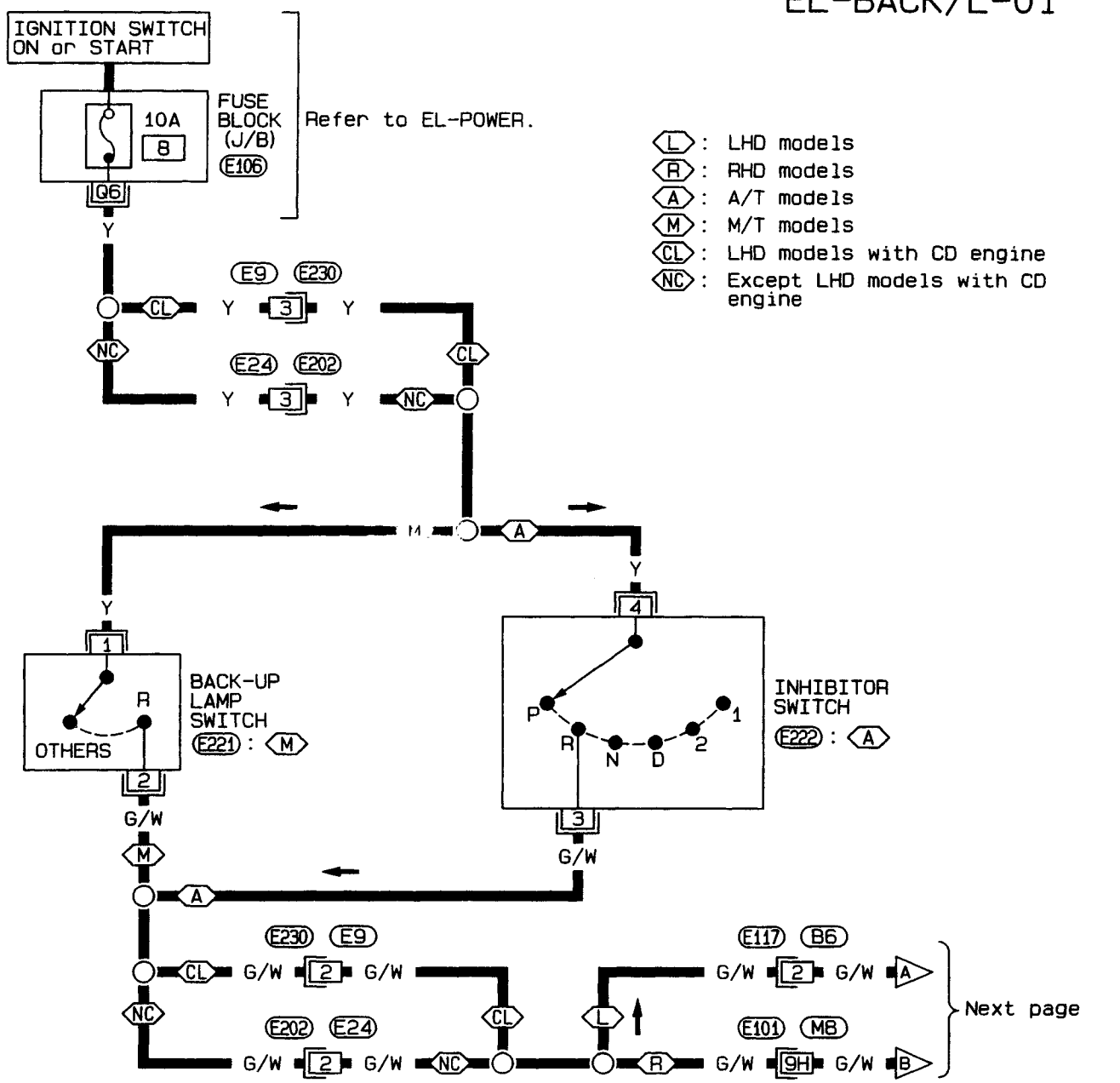

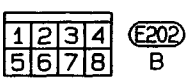

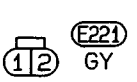

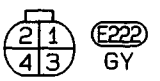

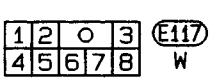

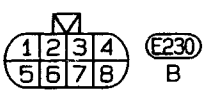

Refer to last page (Foldout page).

M8 , E101

E106

HEL035

Simpo PDF Merge and Split Unregistered Version - http://www.simpopdf.com

Back-up Lamp/Wiring Diagram — BACK/L — (Cont'd)

EL-BACK/L-02

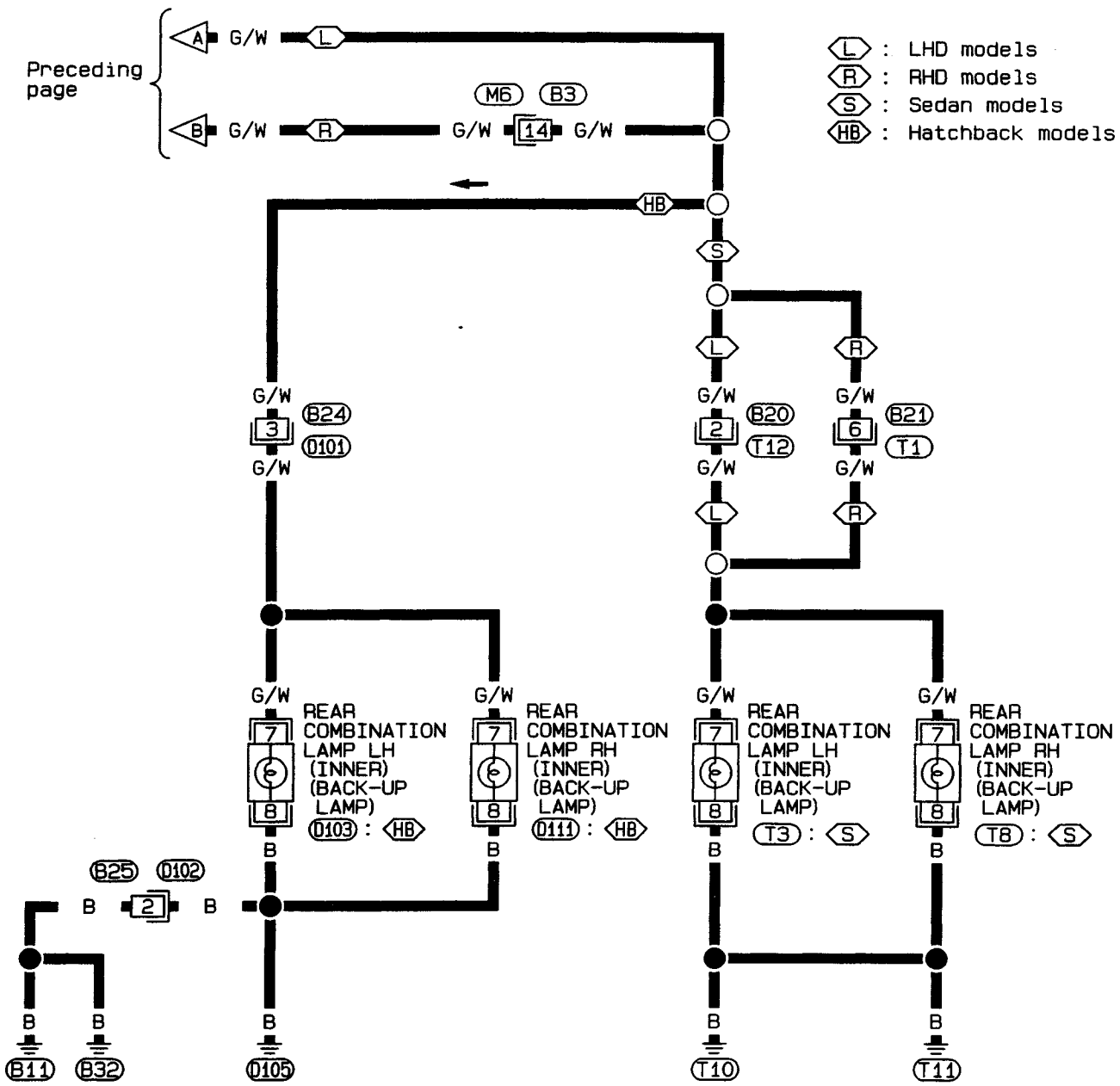

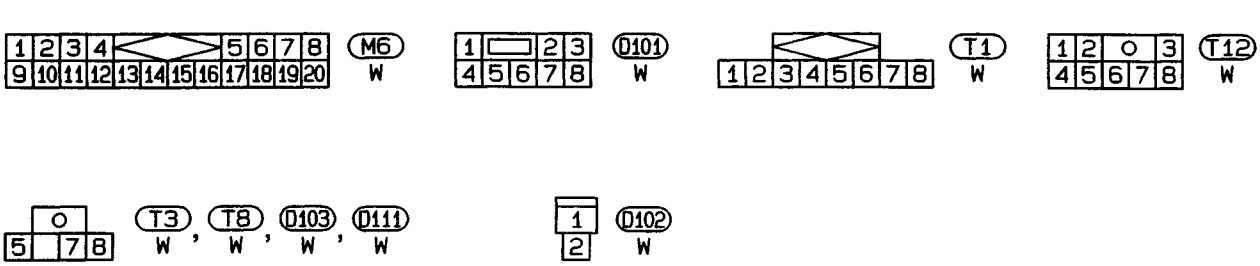

HEL036

Simpo PDF Merge and Split Unregistered Version - http://www.simpopdf.com

Front Fog Lamp/Wiring Diagram — F/FOG —

LHD MODELS WITH DAYTIME LIGHT SYSTEM

EL-F/FOG-01

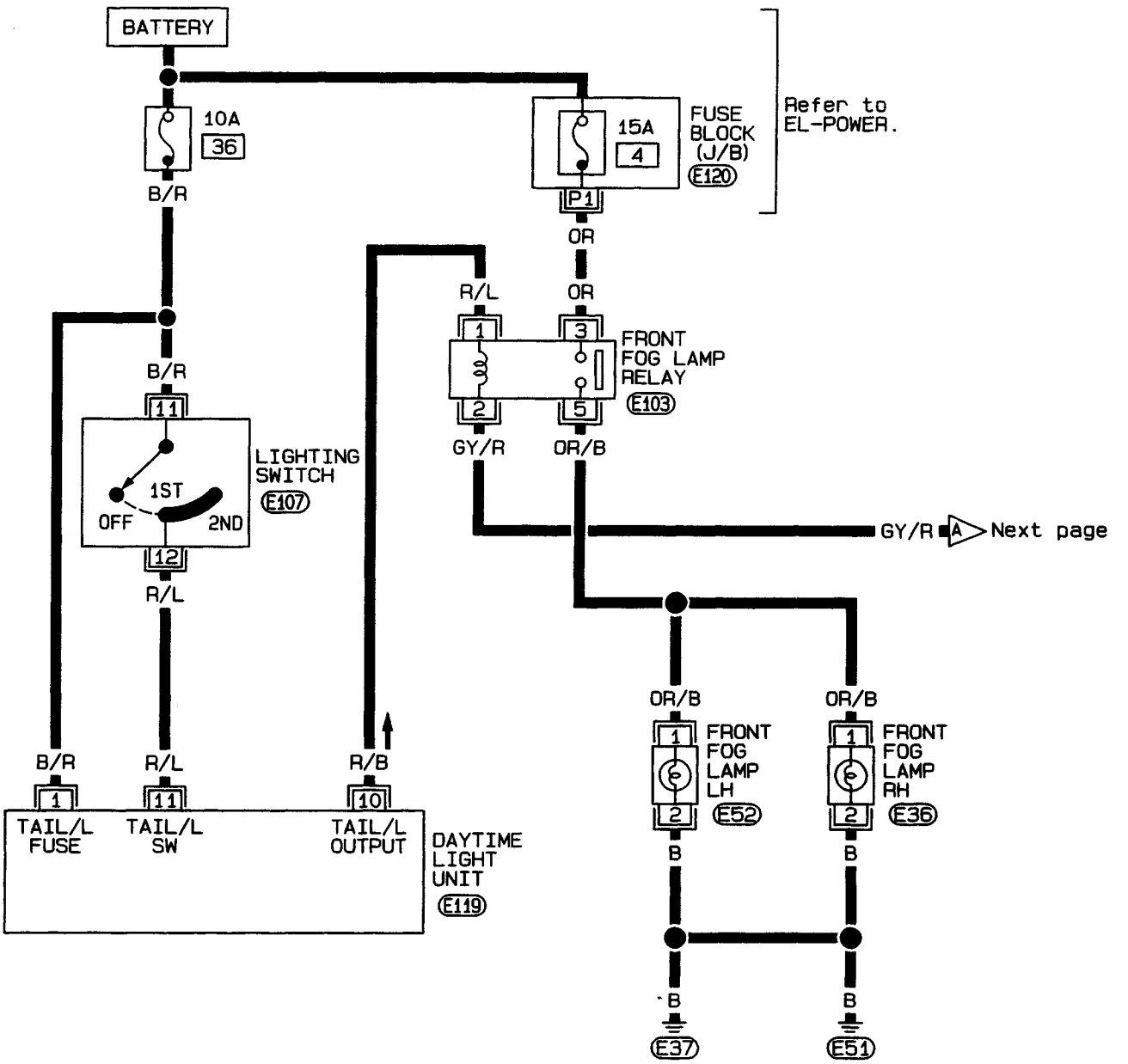

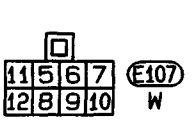

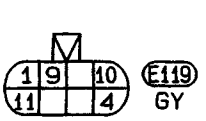

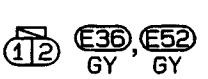

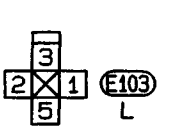

Refer to last page (Foldout page).

E120

HEL037

Simpo PDF Merge and Split Unregistered Version - http://www.simpopdf.com

Front Fog Lamp/Wiring Diagram — F/FOG — (Cont'd)

EL-F/FOG-02

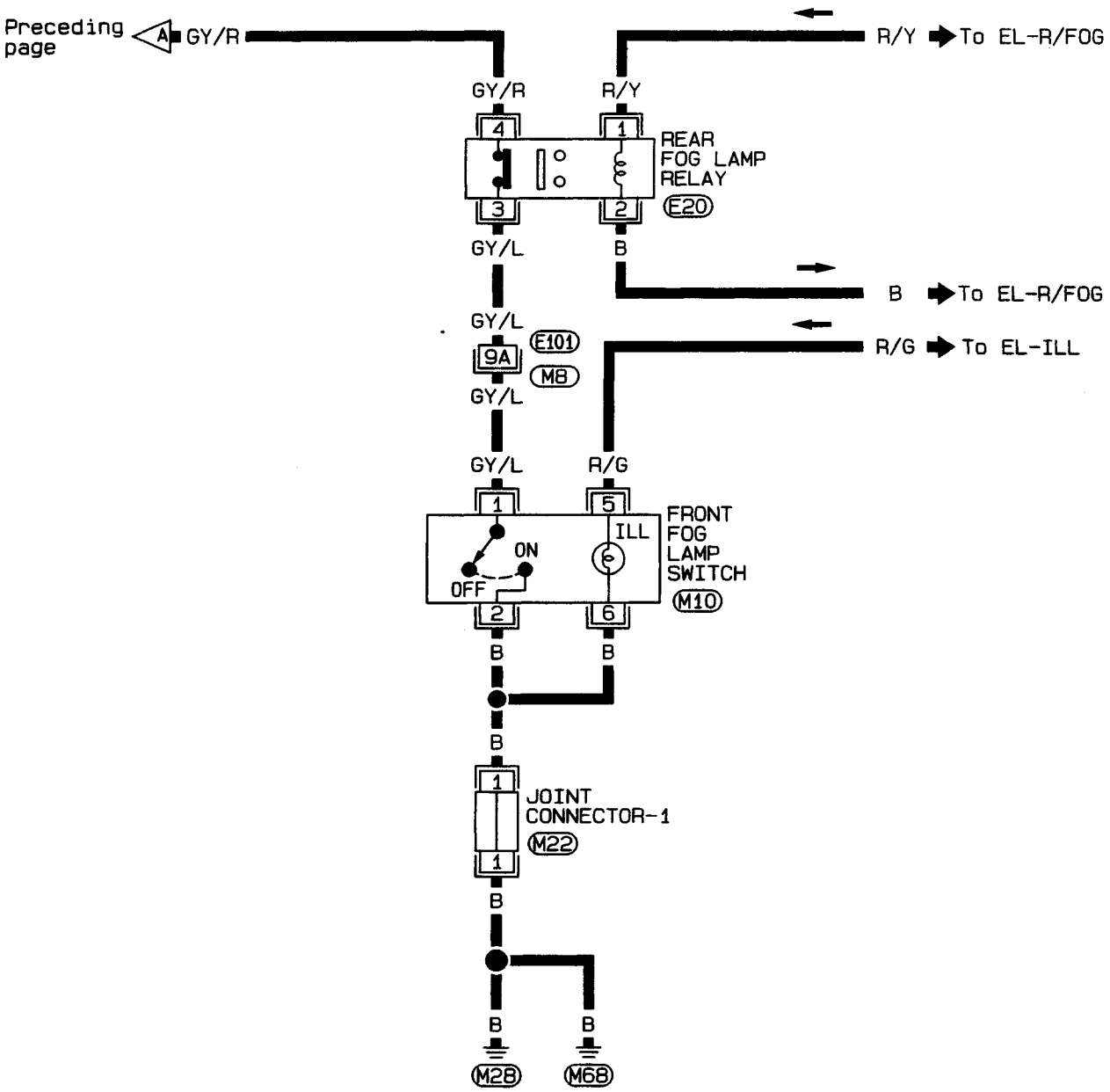

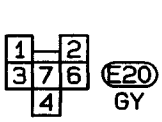

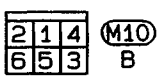

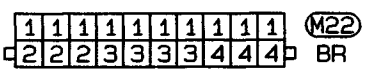

Refer to last page (Foldout page).

M8, E101

EL

HEL038

Simpo PDF Merge and Split Unregistered Version - http://www.simpopdf.com

Front Fog Lamp/Wiring Diagram — F/FOG — (Cont'd)

LHD MODELS WITHOUT DAYTIME LIGHT SYSTEM

EL-F/FOG-03

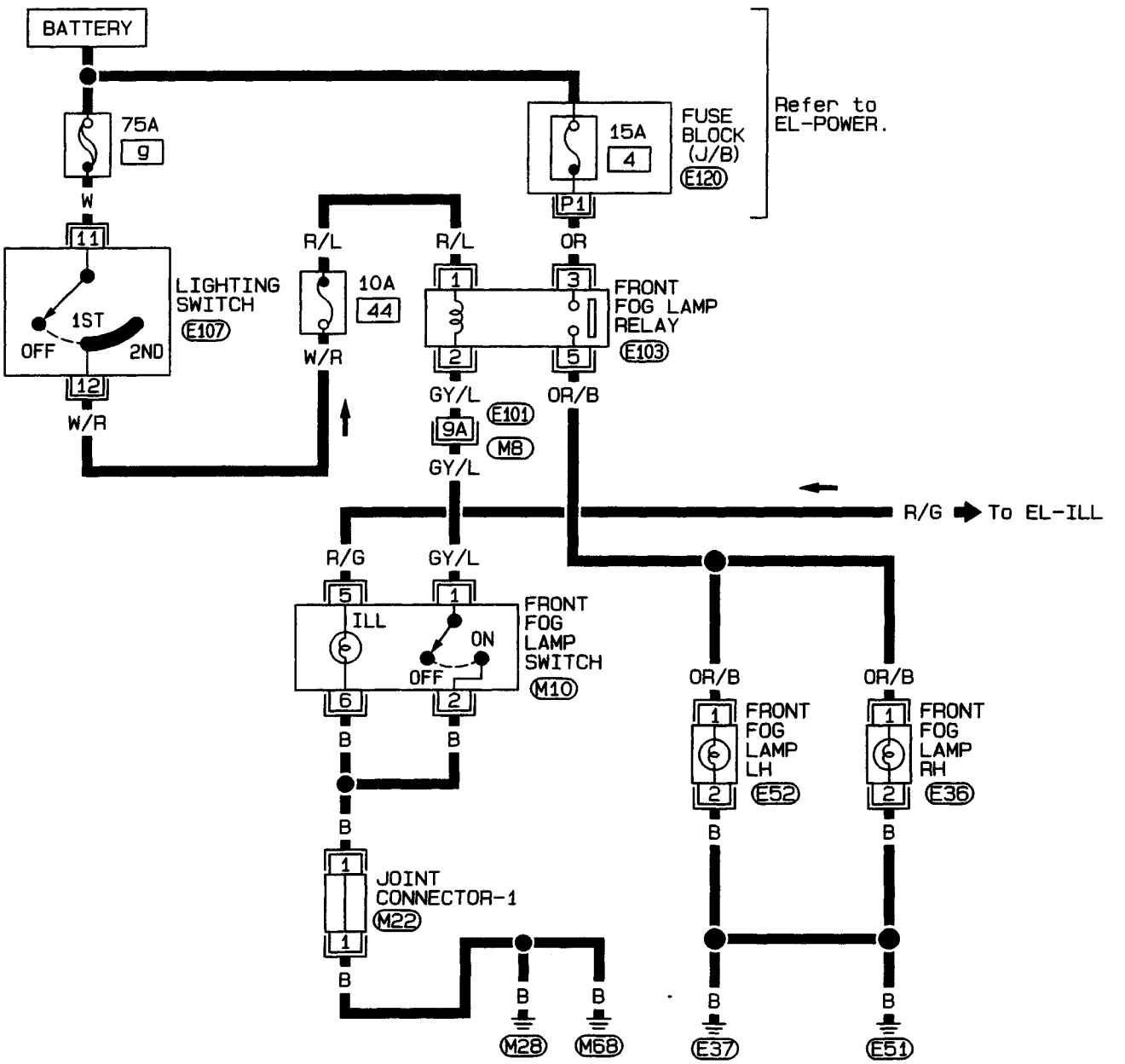

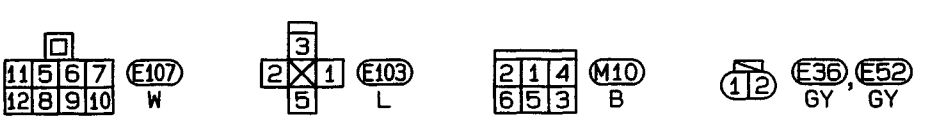

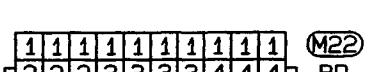

Refer to last page (Foldout page).

M8, E101
E120

HEL039

Simpo PDF Merge and Split Unregistered Version - http://www.simpopdf.com

Front Fog Lamp/Wiring Diagram — F/FOG — (Cont'd)

RHD MODELS FOR EUROPE

EL-F/FOG-04

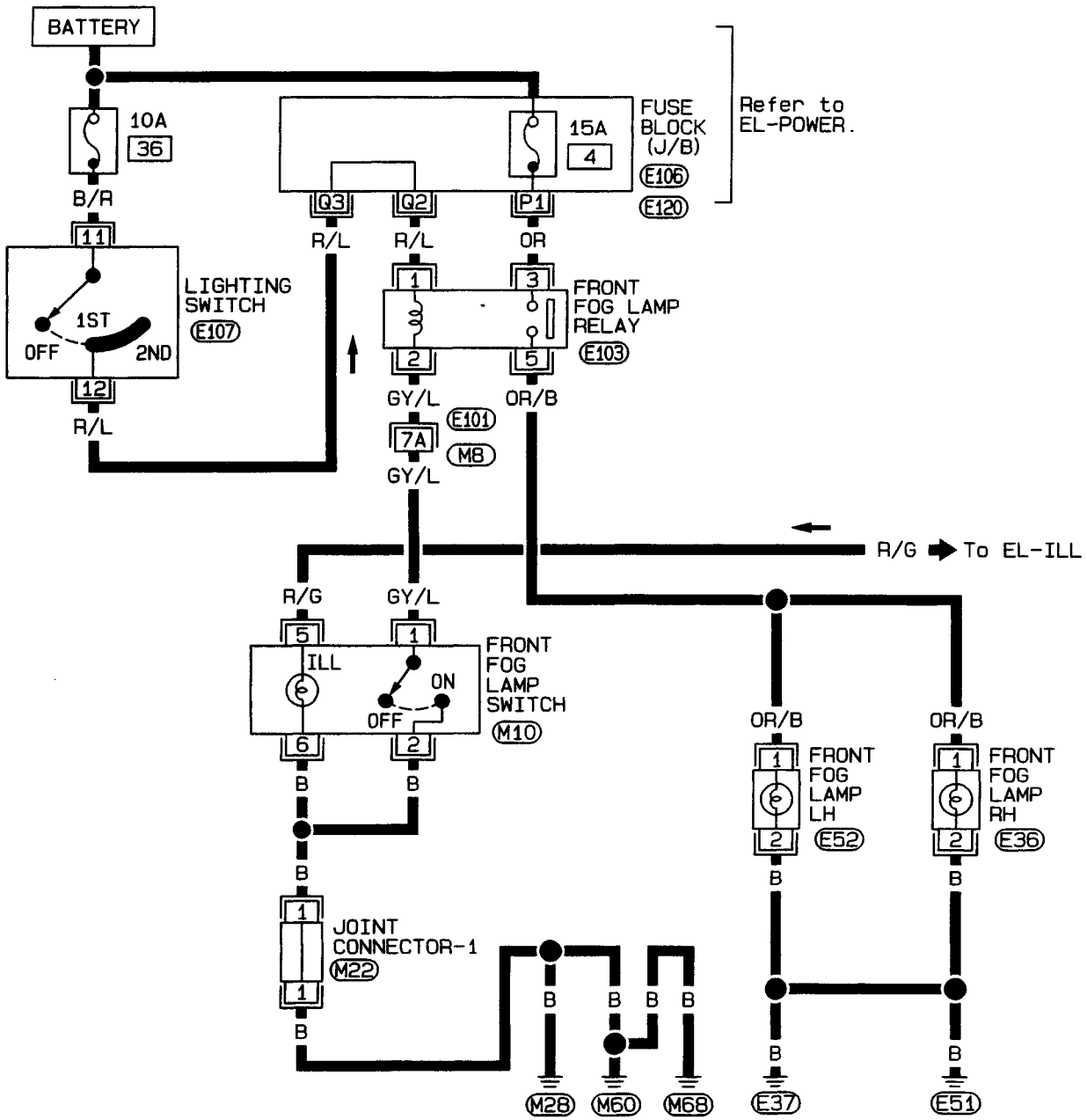

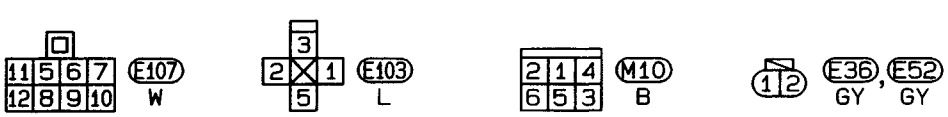

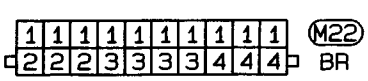

Refer to last page (Foldout page).

M8, E101
E106, E120

HEL040

Simpo PDF Merge and Split Unregistered Version - http://www.simpopdf.com

Front Fog Lamp/Wiring Diagram — F/FOG — (Cont'd)

RHD MODELS EXCEPT FOR EUROPE

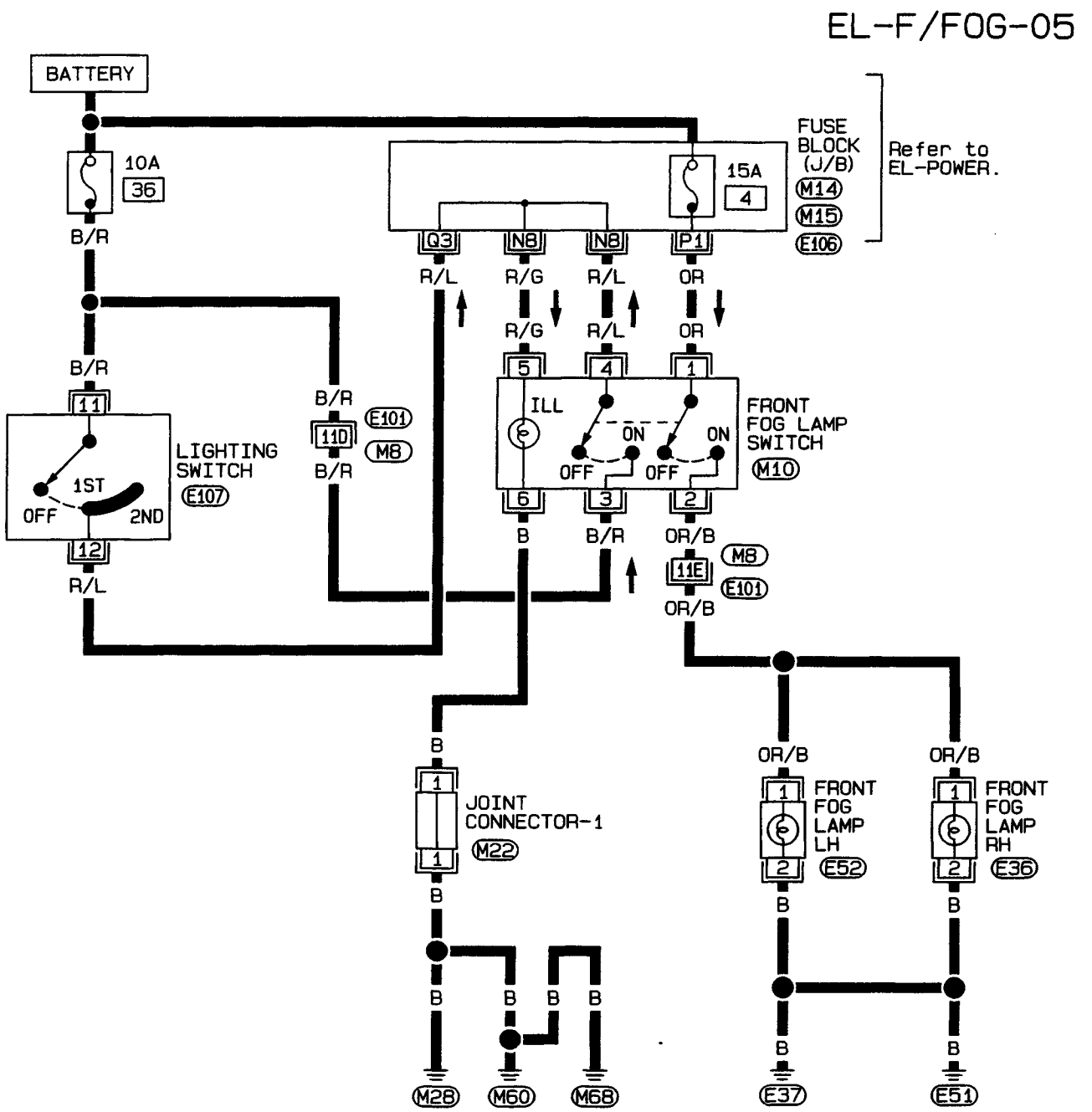

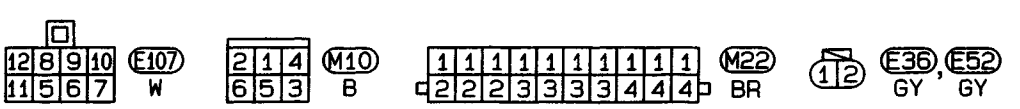

Refer to last page (Foldout page).

M8, E101

M14, M15, E106

HEL041

Simpo PDF Merge and Split Unregistered Version - http://www.simpopdf.com

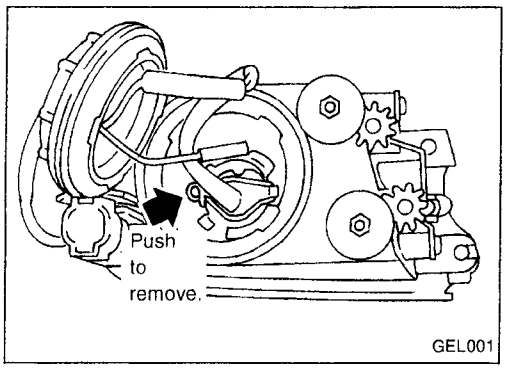

Front Fog Lamp Bulb Replacement

The front fog lamp is a semi-sealed beam type which uses a replaceable halogen bulb.

- **Grasp only the plastic base when handling the bulb. Never touch the glass envelope.**

1. Disconnect the battery cable.
2. Disconnect the harness connector from the back side of the bulb.
3. Turn the bulb retaining ring counterclockwise until it is free from the front fog lamp reflector, and then remove it.
4. Pull off the rubber cap.
5. Remove the front fog lamp bulb carefully. Do not shake or rotate the bulb when removing it.
6. Install in the reverse order of removal.

CAUTION:

- **Do not leave front fog lamp reflector without bulb for a long period of time. Dust, moisture, smoke, etc. entering front fog lamp body may affect the performance of the front fog lamp. Remove front fog lamp bulb from the front fog lamp reflector just before a replacement bulb is installed.**

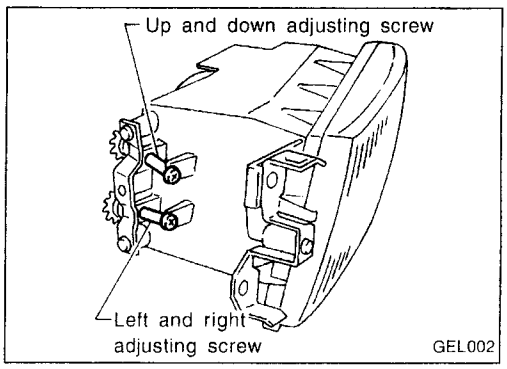

Front Fog Lamp Aiming Adjustment

Before performing aiming adjustment, make sure of the following.

a. Keep all tires inflated to correct pressure.
b. Place vehicle on level ground.
c. See that vehicle is unloaded (except for full levels of coolant, engine oil and fuel, and spare tire, jack, and tools). Have the driver or equivalent weight placed in driver's seat.

Adjust aiming by turning the adjusting screw.

EL

Simpo PDF Merge and Split Unregistered Version - http://www.simpopdf.com

Rear Fog Lamp/Wiring Diagram — R/FOG —

WITH DAYTIME LIGHT SYSTEM

EL-R/FOG-01

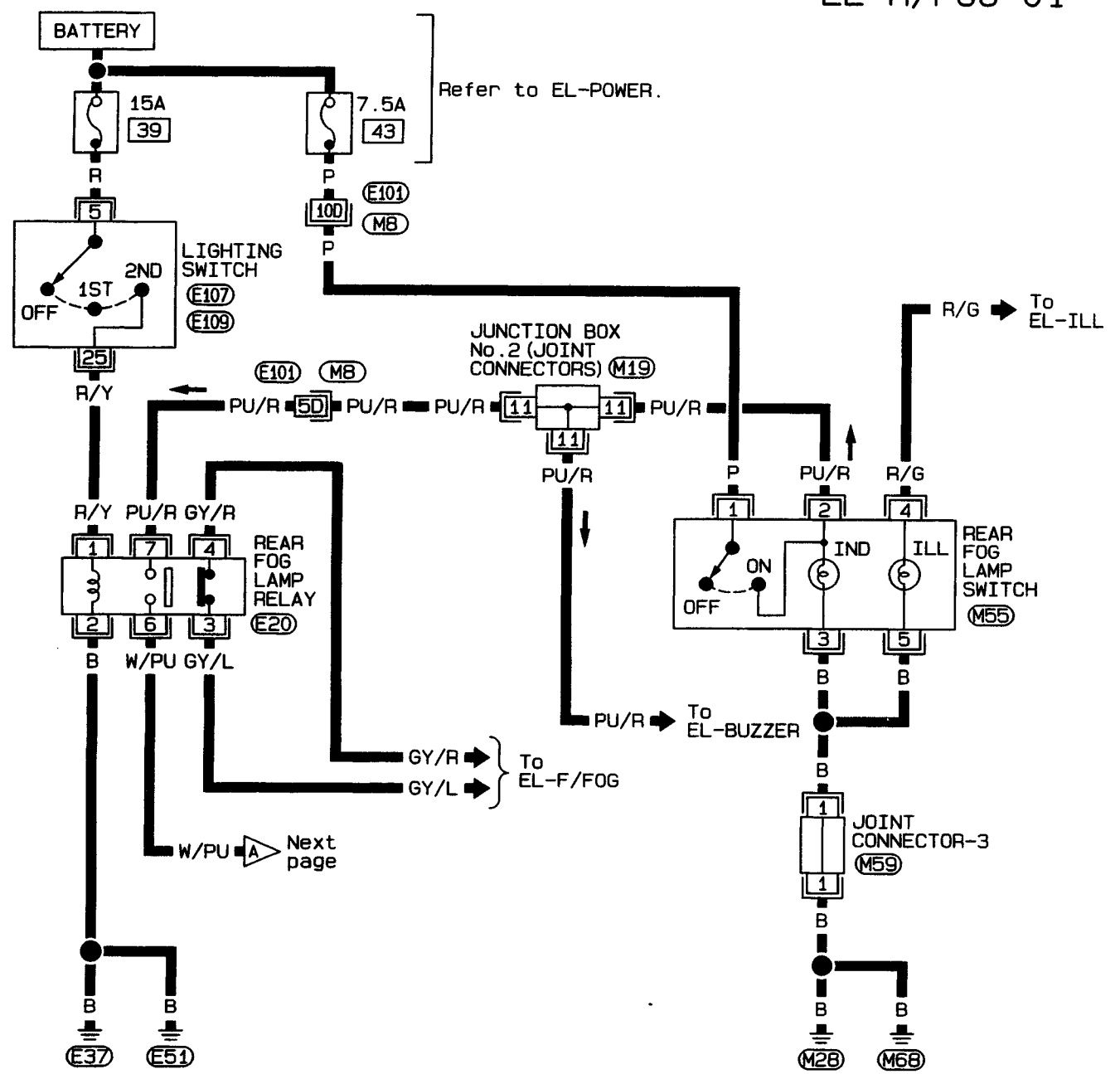

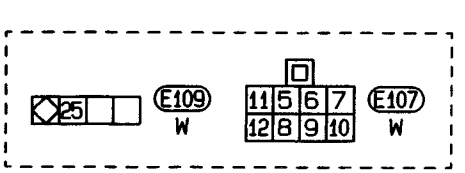

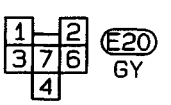

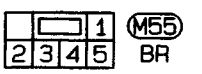

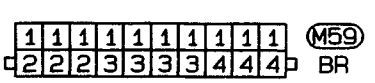

Refer to last page (Foldout page).

M8, E101

M19

HEL042

Simpo PDF Merge and Split Unregistered Version - http://www.simpopdf.com

Rear Fog Lamp/Wiring Diagram — R/FOG — (Cont'd)

EL-R/FOG-02

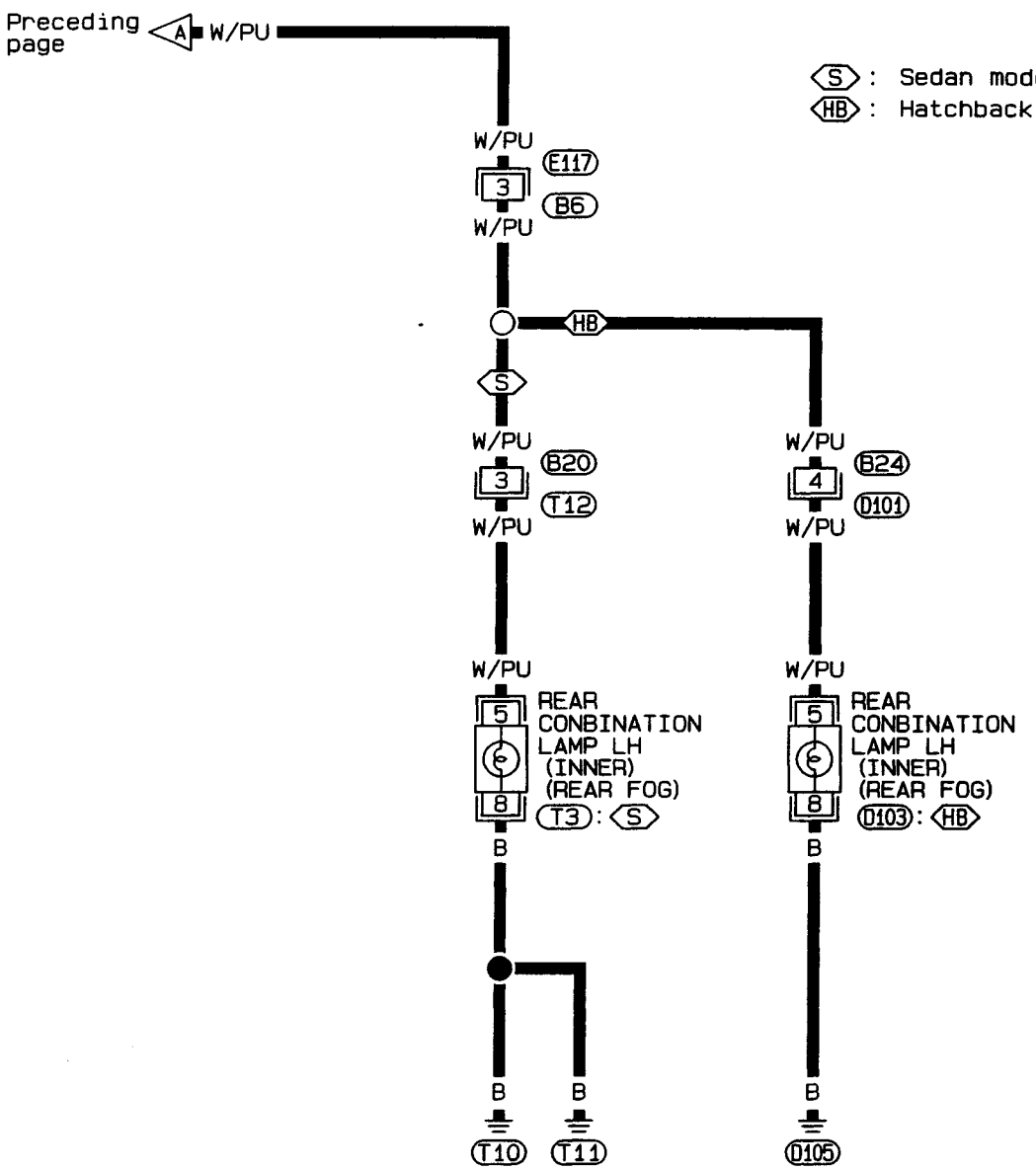

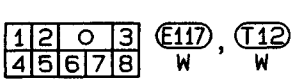

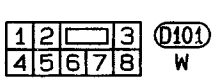

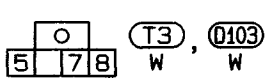

EL

HEL043

Simpo PDF Merge and Split Unregistered Version - http://www.simpopdf.com

Rear Fog Lamp/Wiring Diagram — R/FOG — (Cont'd)

WITHOUT DAYTIME LIGHT SYSTEM

EL-R/FOG-03

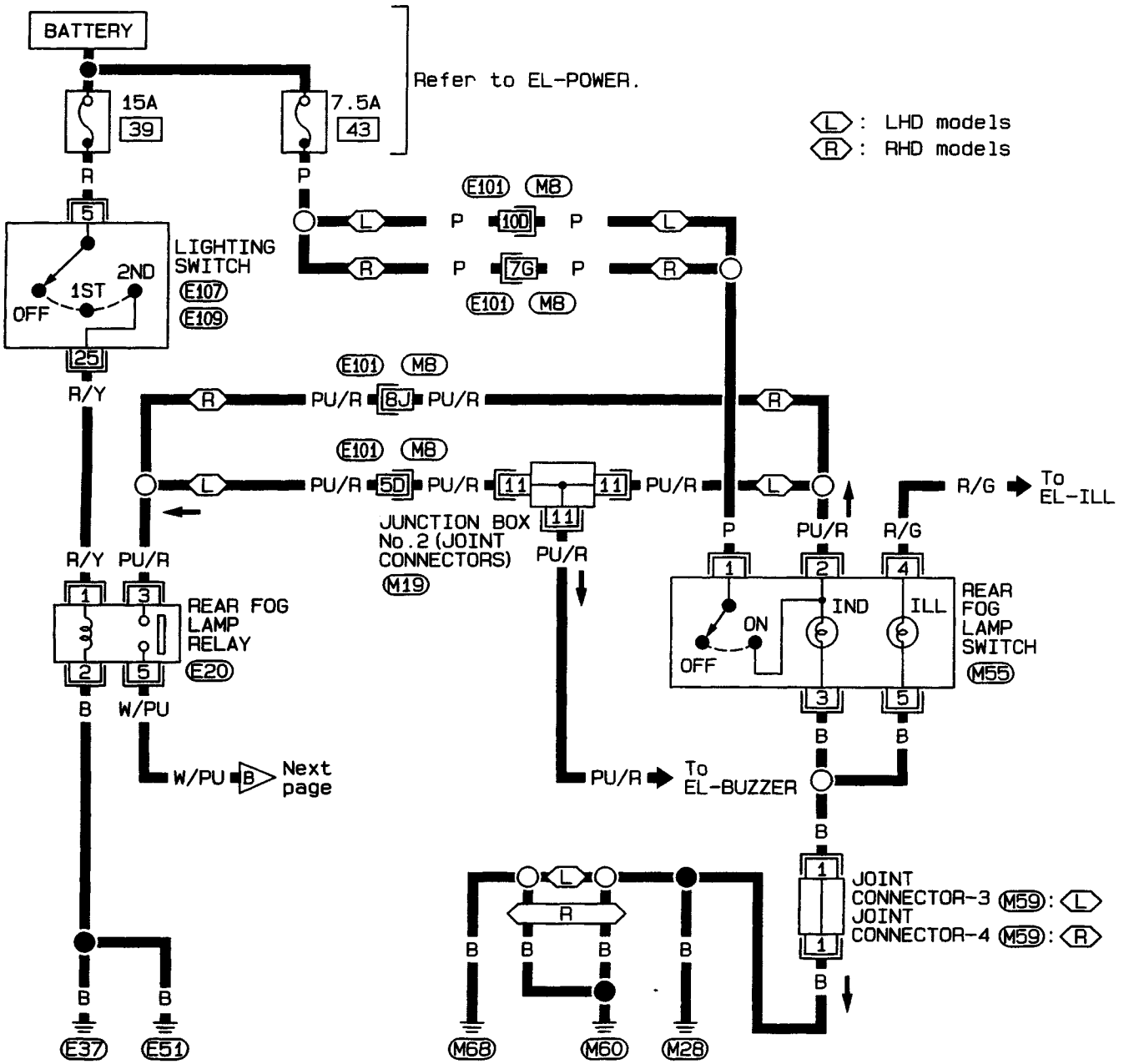

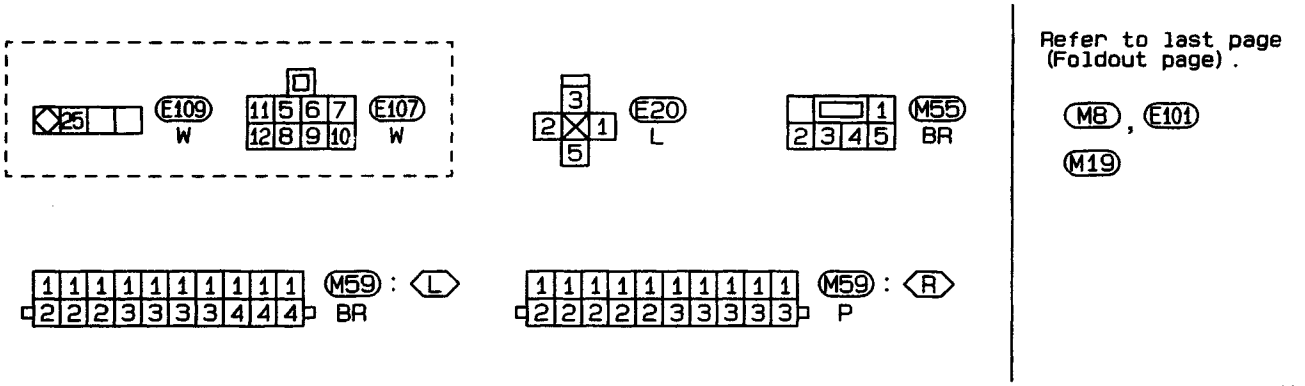

Refer to last page (Foldout page).

M8, E101

M19

HEL044

Simpo PDF Merge and Split Unregistered Version - http://www.simpopdf.com

Rear Fog Lamp/Wiring Diagram — R/FOG — (Cont'd)

EL-R/FOG-04

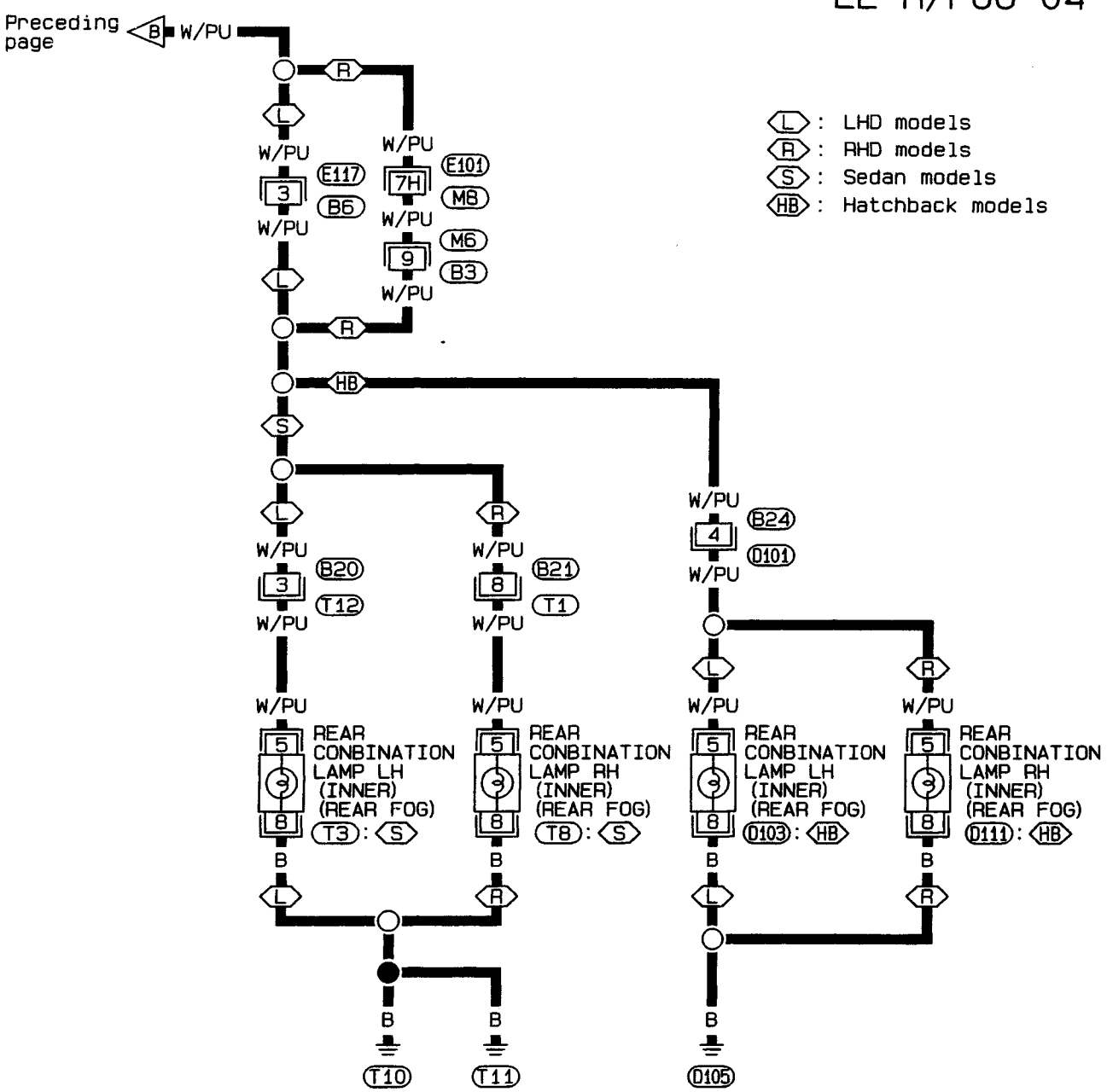

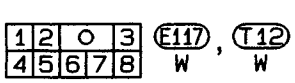

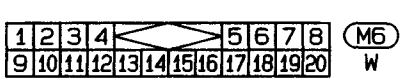



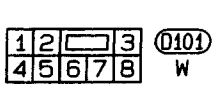

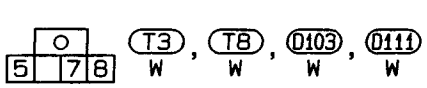

Refer to last page (Foldout page).

M8, E101

EL

Simpo PDF Merge and Split Unregistered Version - http://www.simpopdf.com

Turn Signal and Hazard Warning Lamps/ Schematic

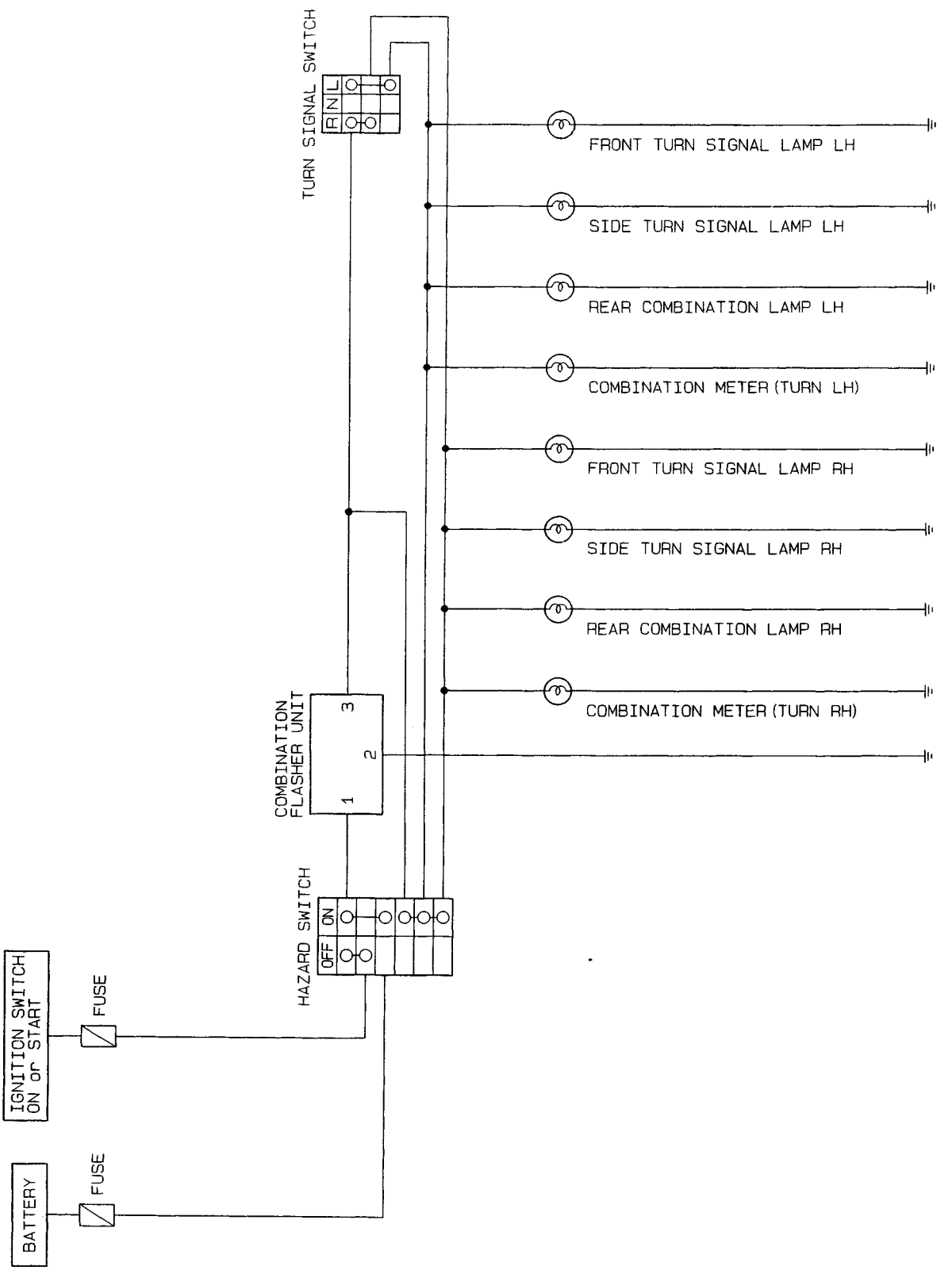

HEL052

Simpo PDF Merge and Split Unregistered Version - http://www.simpopdf.com

Turn Signal and Hazard Warning Lamps/Wiring Diagram — TURN —

LHD MODELS

EL-TURN-01

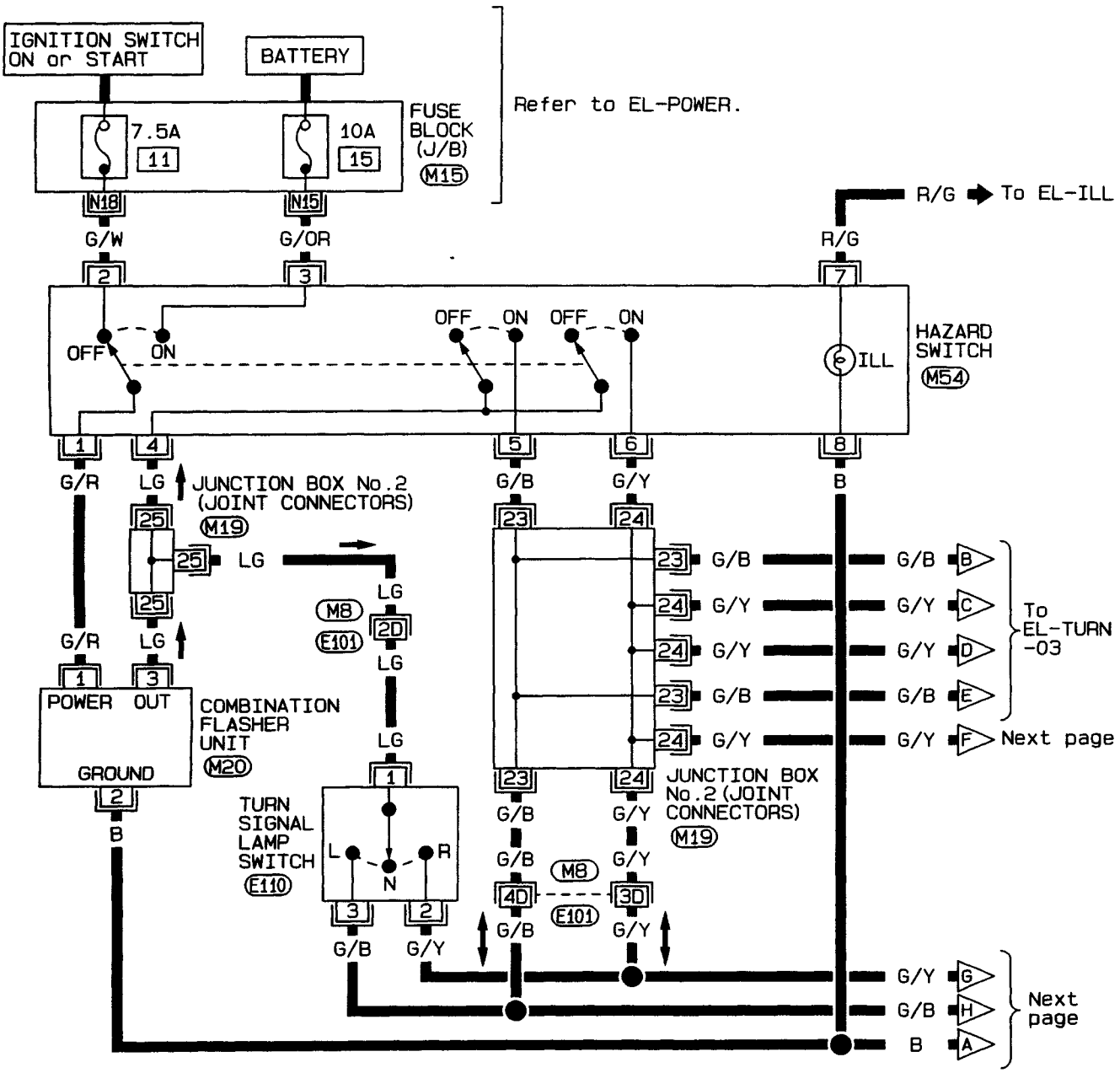

M54 W

M20 B

E110 W

Refer to last page (Foldout page).

M8, E101

M15

M19

HEL046

Simpo PDF Merge and Split Unregistered Version - http://www.simpopdf.com

Turn Signal and Hazard Warning Lamps/Wiring Diagram — TURN — (Cont'd)

EL-TURN-02

NB : GA engine without dual air bag system and ABS
BH : Except NB

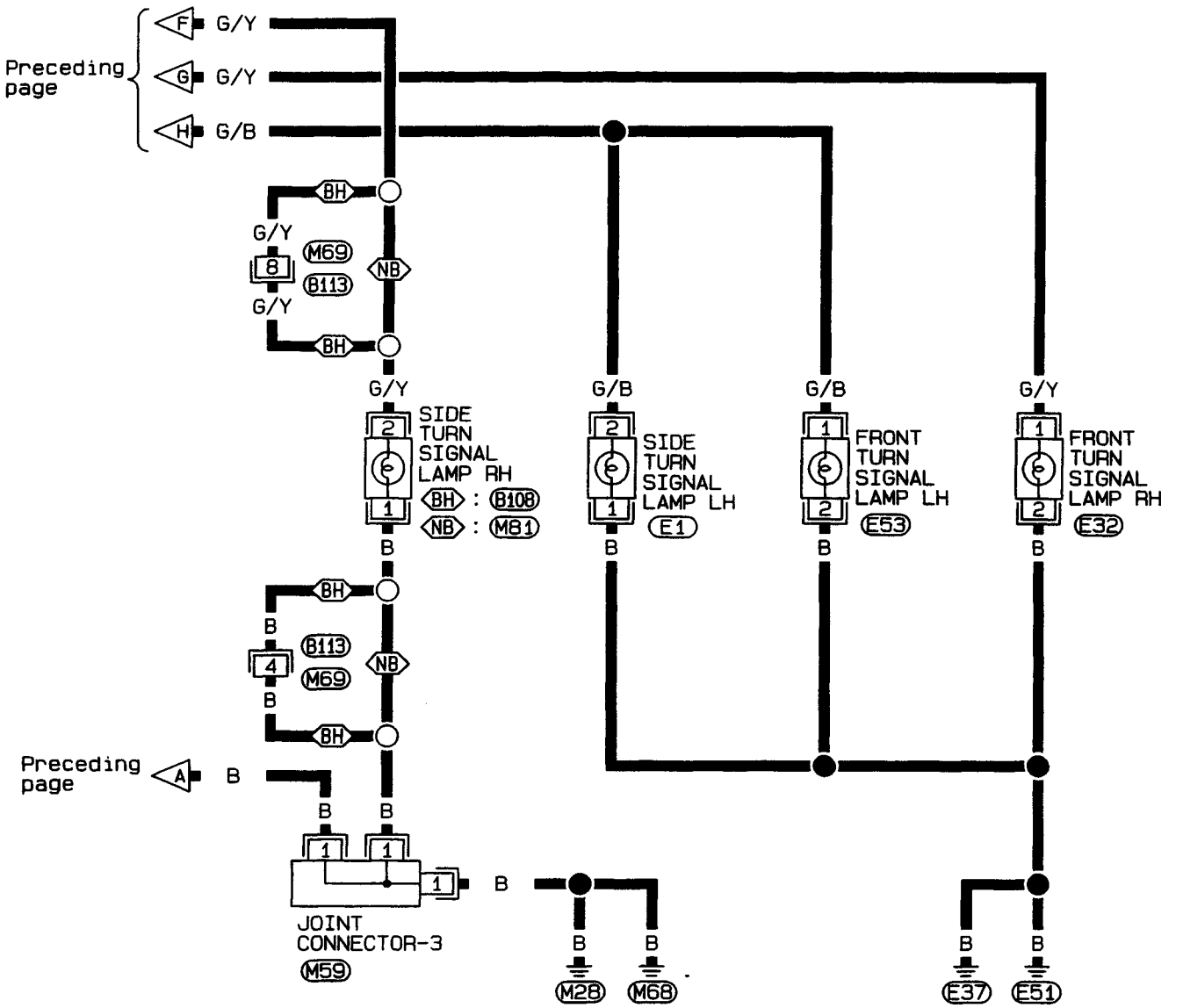

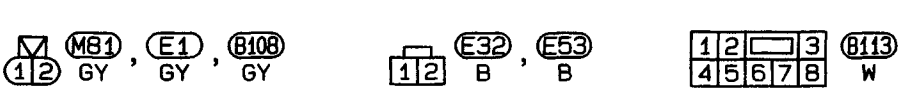

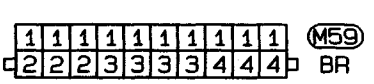

HEL047

Simpo PDF Merge and Split Unregistered Version - http://www.simpopdf.com

Turn Signal and Hazard Warning Lamps/Wiring Diagram — TURN — (Cont'd)

EL-TURN-03

S : Sedan models
HB : Hatchback models
TM : With tachometer
WT : Without tachometer

*1 ··· TM 37 , WT 14
*2 ··· TM 36 , WT 12
*3 ··· TM 17 , WT 13

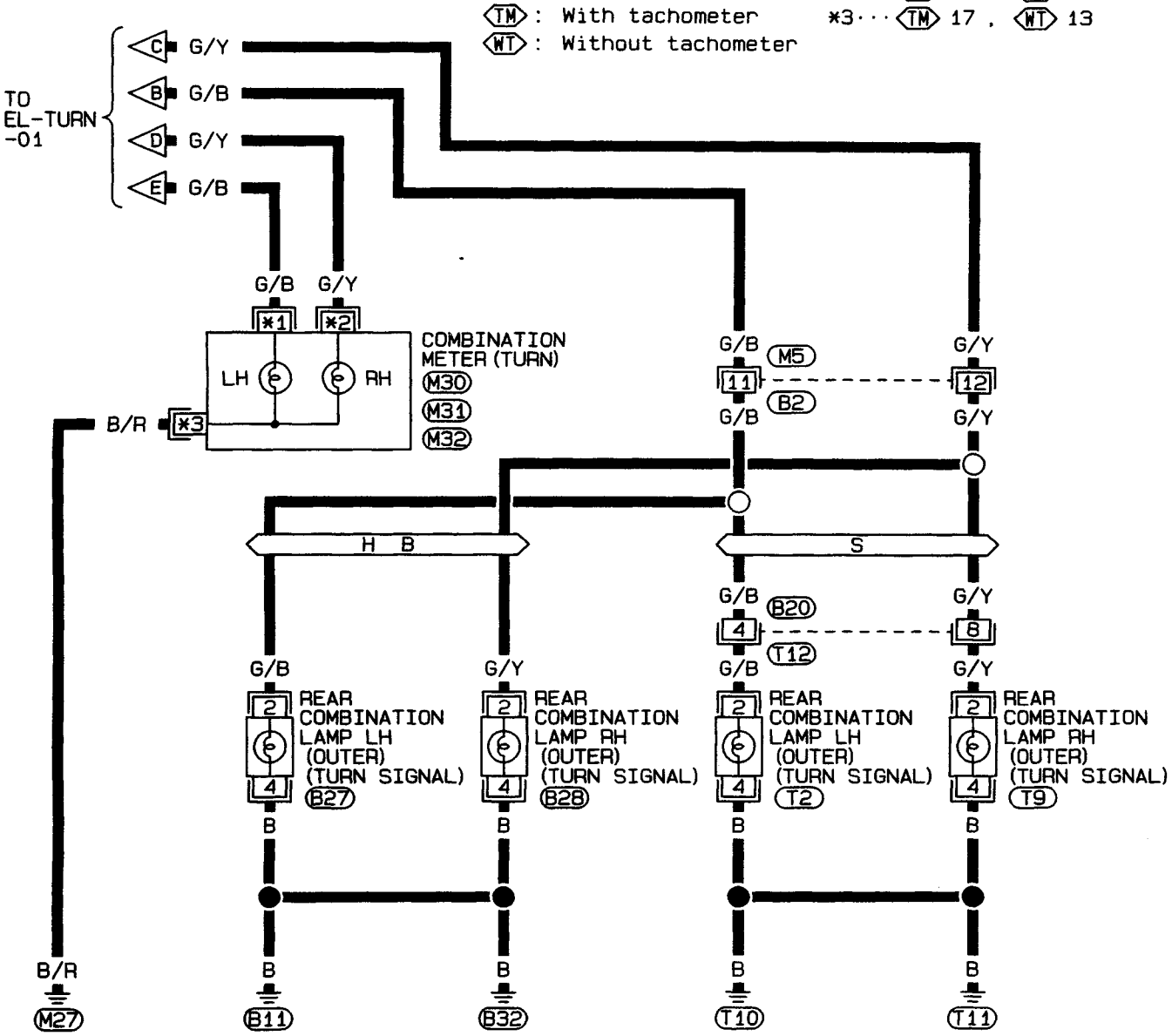

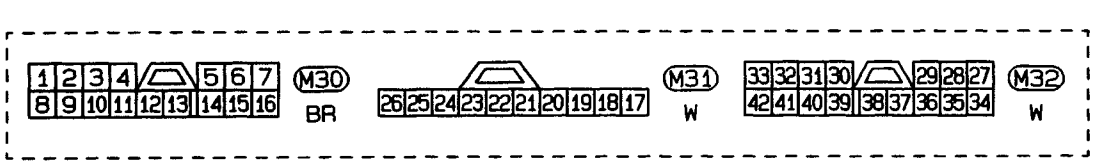

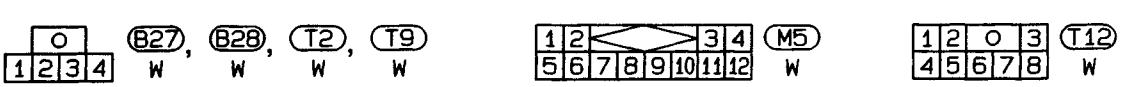

HEL048

Simpo PDF Merge and Split Unregistered Version - http://www.simpopdf.com

Turn Signal and Hazard Warning Lamps/Wiring Diagram — TURN — (Cont'd)

RHD MODELS

EL-TURN-04

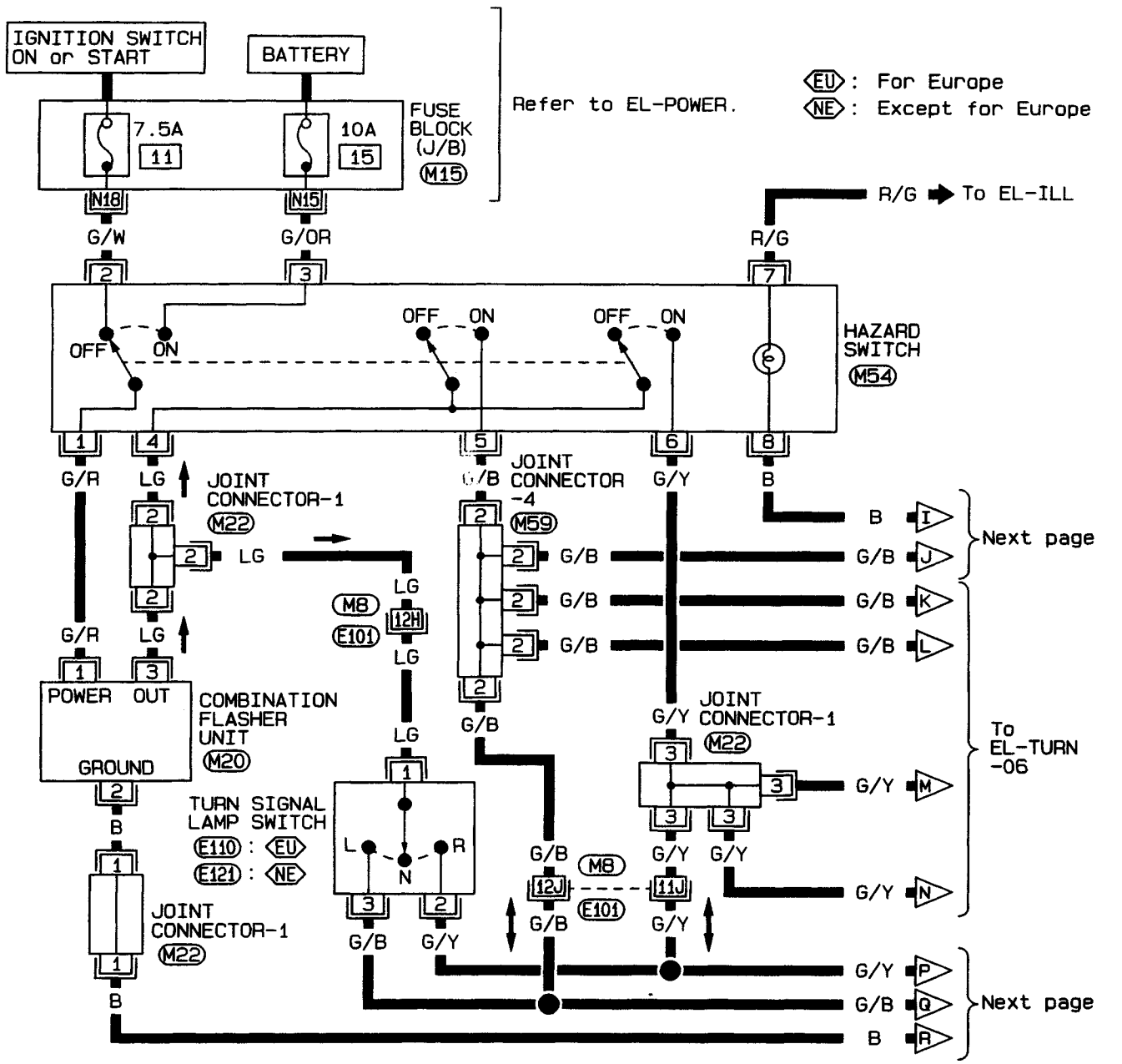

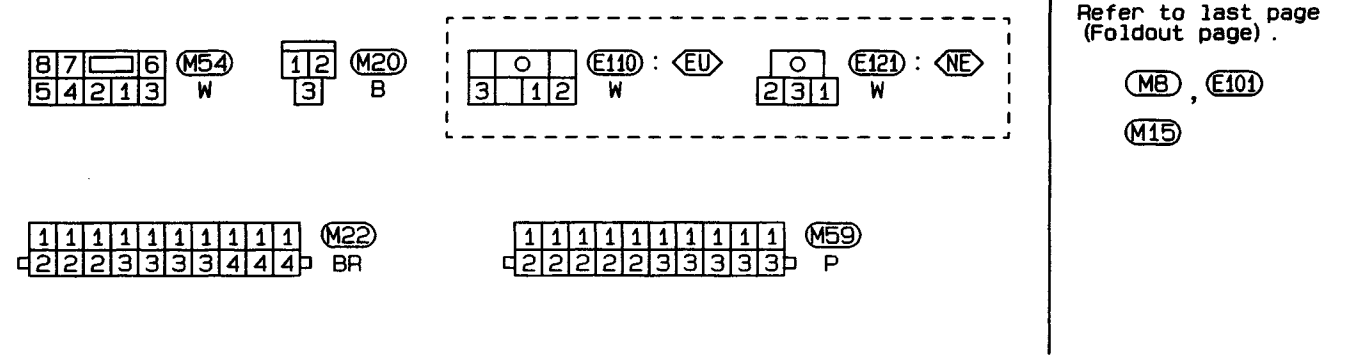

Refer to last page (Foldout page).

M8, E101

M15

HEL049

Simpo PDF Merge and Split Unregistered Version - http://www.simpopdf.com

Turn Signal and Hazard Warning Lamps/Wiring Diagram — TURN — (Cont'd)

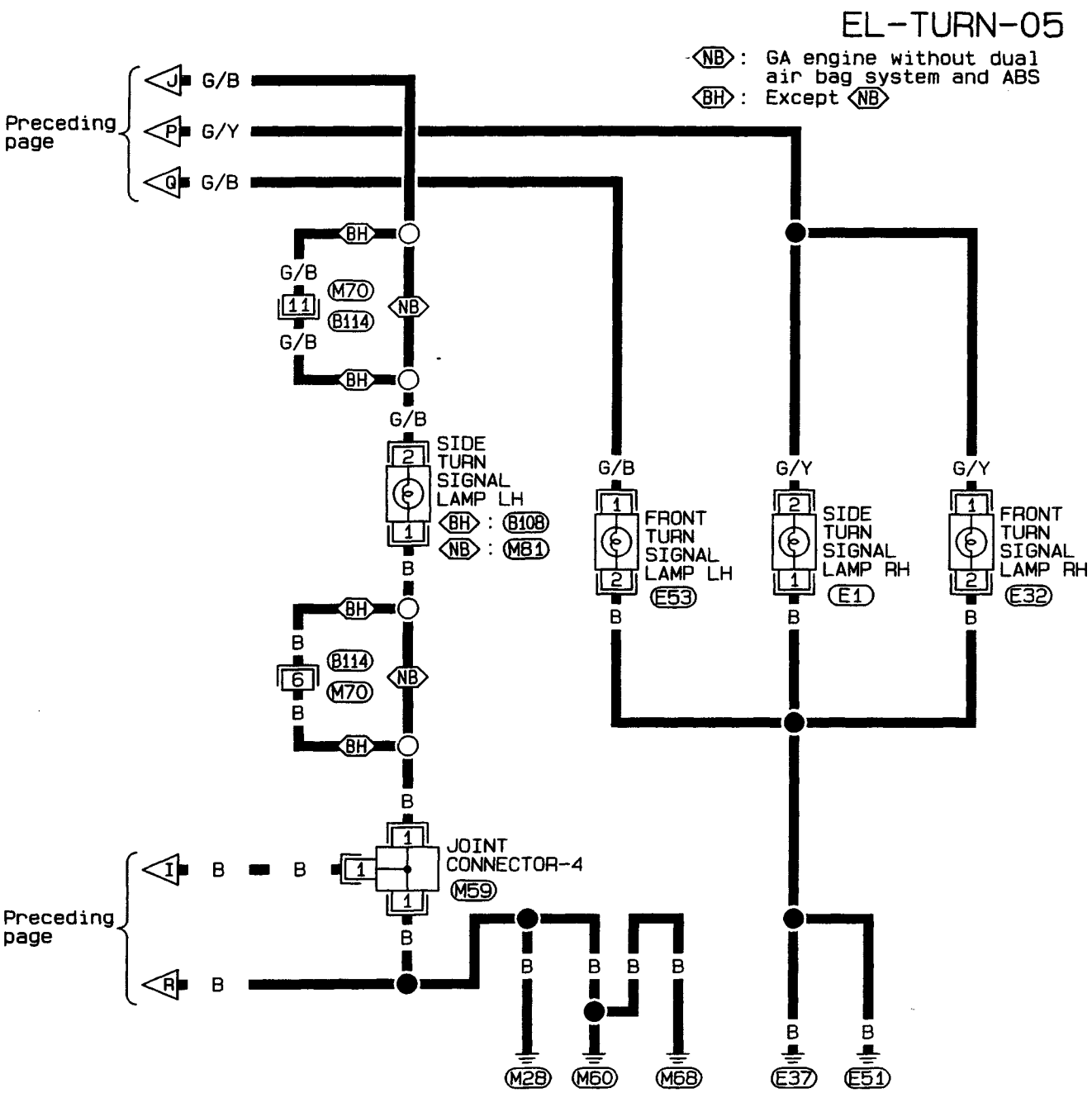

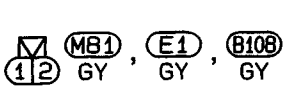

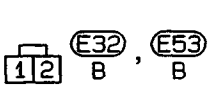

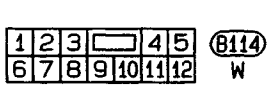

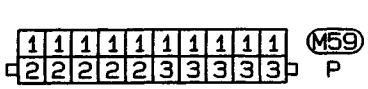

EL

HEL050

Simpo PDF Merge and Split Unregistered Version - http://www.simpopdf.com

Turn Signal and Hazard Warning Lamps/Wiring Diagram — TURN — (Cont'd)

EL-TURN-06

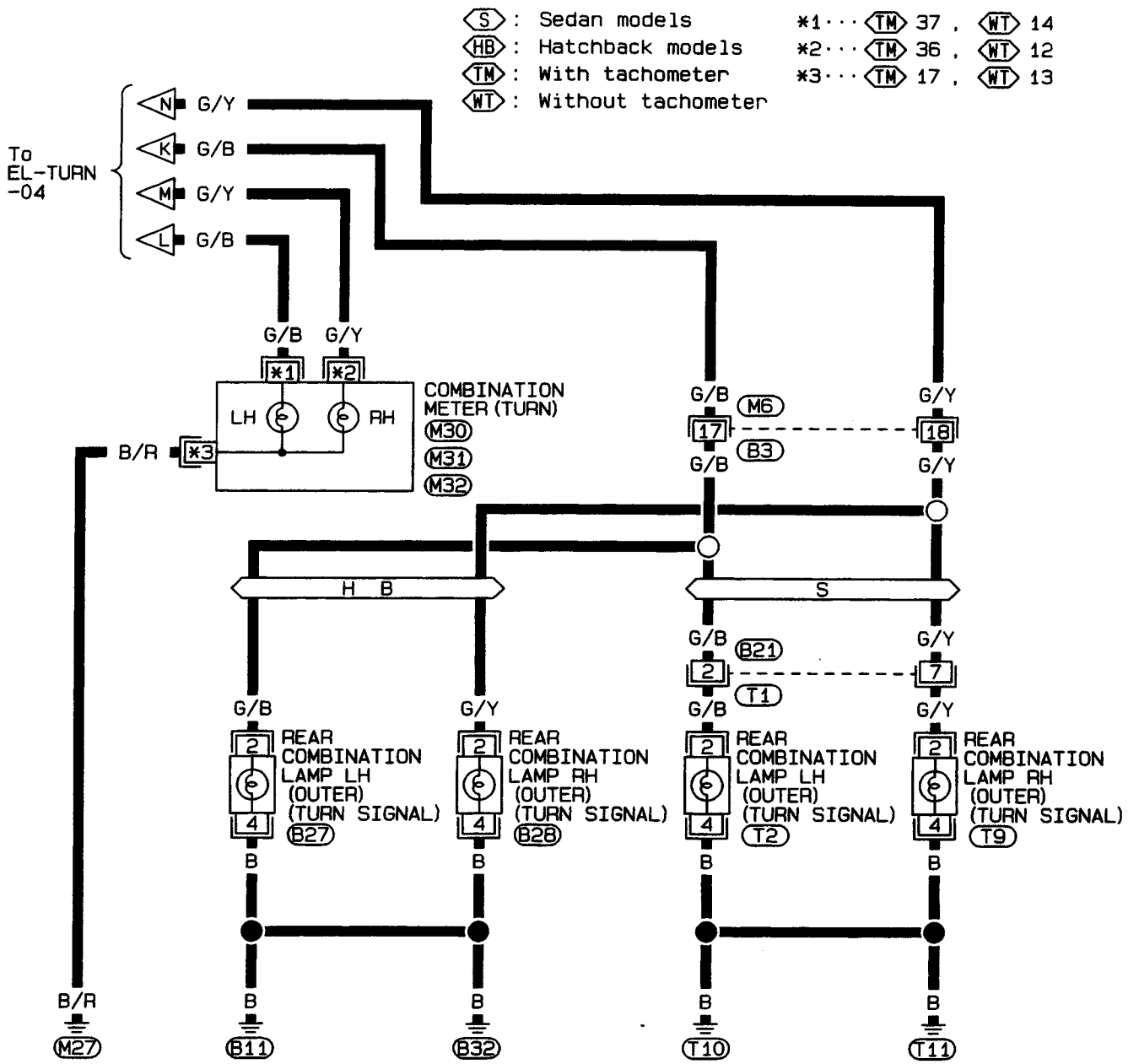

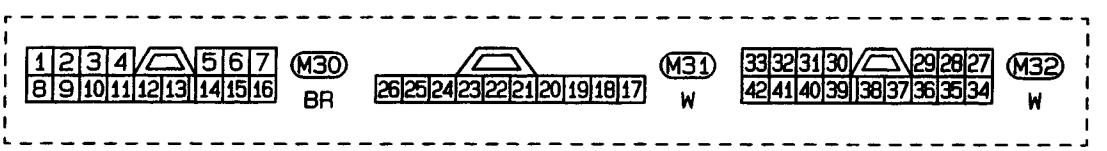



HEL051

Simpo PDF Merge and Split Unregistered Version - http://www.simpopdf.com

Turn Signal and Hazard Warning Lamps/Trouble Diagnoses

Symptom	Possible cause	Repair order
Turn signal and hazard warning lamps do not operate.	1. Hazard switch 2. Combination flasher unit 3. Open in combination flasher unit circuit	1. Check hazard switch. 2. Refer to combination flasher unit check. 3. Check wiring to combination flasher unit for open circuit.
Turn signal lamps do not operate but hazard warning lamps operate.	1. 7.5A fuse 2. Hazard switch 3. Turn signal switch 4. Open in turn signal switch circuit	1. Check 7.5A fuse (No. 11, located in fuse block). Turn ignition switch ON and verify battery positive voltage is present at terminal ② of hazard switch. 2. Check hazard switch. 3. Check turn signal switch. 4. Check harness between combination flasher unit terminal ③ and turn signal switch terminal ① for open circuit.
Hazard warning lamps do not operate but turn signal lamps operate.	1. 10A fuse 2. Hazard switch 3. Open in hazard switch circuit	1. Check 10A fuse (No. 15, located in fuse block). Verify battery positive voltage is present at terminal ③ of hazard switch. 2. Check hazard switch. 3. Check harness between combination flasher unit terminal ③ and hazard switch terminal ④ for open circuit.
Individual turn signal lamp or turn indicators do not operate.	1. Bulb 2. Grounds	1. Check bulb. 2. Check ground circuit for the bulb.

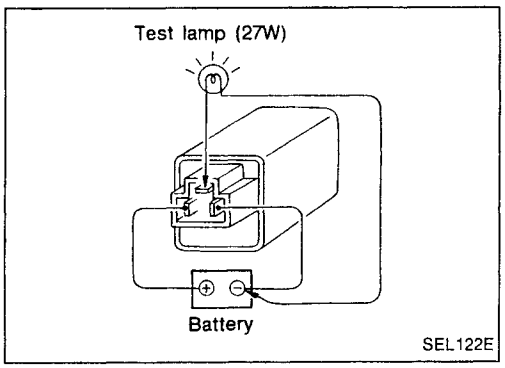

Combination Flasher Unit Check

- Before checking, ensure that bulbs meet specifications.
- Connect a battery and test lamp to the combination flasher unit, as shown. Combination flasher unit is properly functioning if it blinks when power is supplied to the circuit.

EL

Simpo PDF Merge and Split Unregistered Version - http://www.simpopdf.com

Bulb Specifications

	Wattage (W)
Front turn signal lamp	21
Clearance lamp	5
Front fog lamp	55
Side turn signal lamp	5
Rear combination lamp	
Turn signal	21
Stop/Tail	21/5
Tail	5
Back-up	21
Rear fog	21
License plate lamp	5
High-mounted stop lamp	
Bulb type (Sedan)	5 (x6)
Bulb type (Hatchback)	21
LED type	4.6

Simpo PDF Merge and Split Unregistered Version - http://www.simpopdf.com

Illumination/Schematic

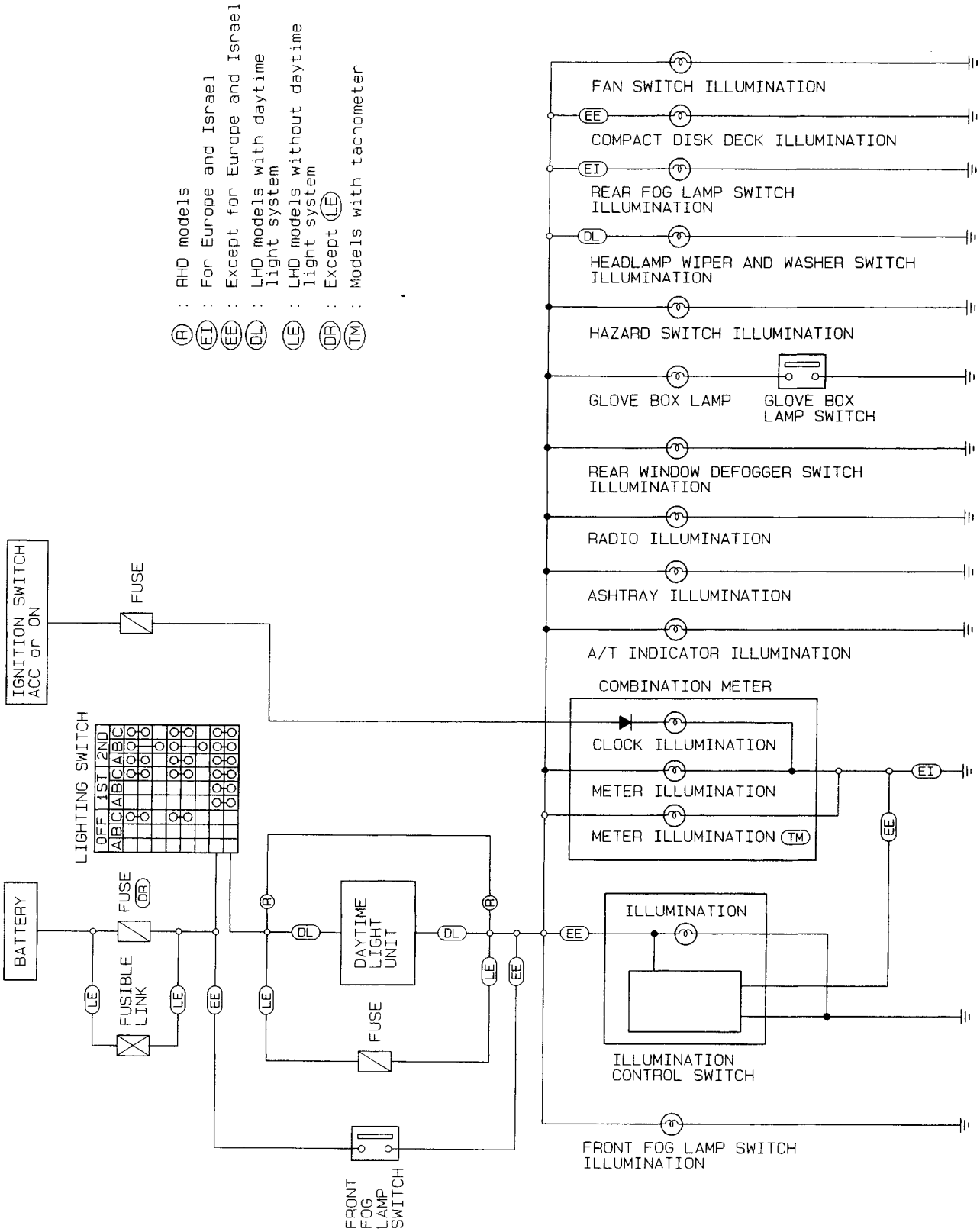

HEL060

EL

Simpo PDF Merge and Split Unregistered Version - http://www.simpopdf.com

Illumination/Wiring Diagram — ILL —

EL-ILL-01

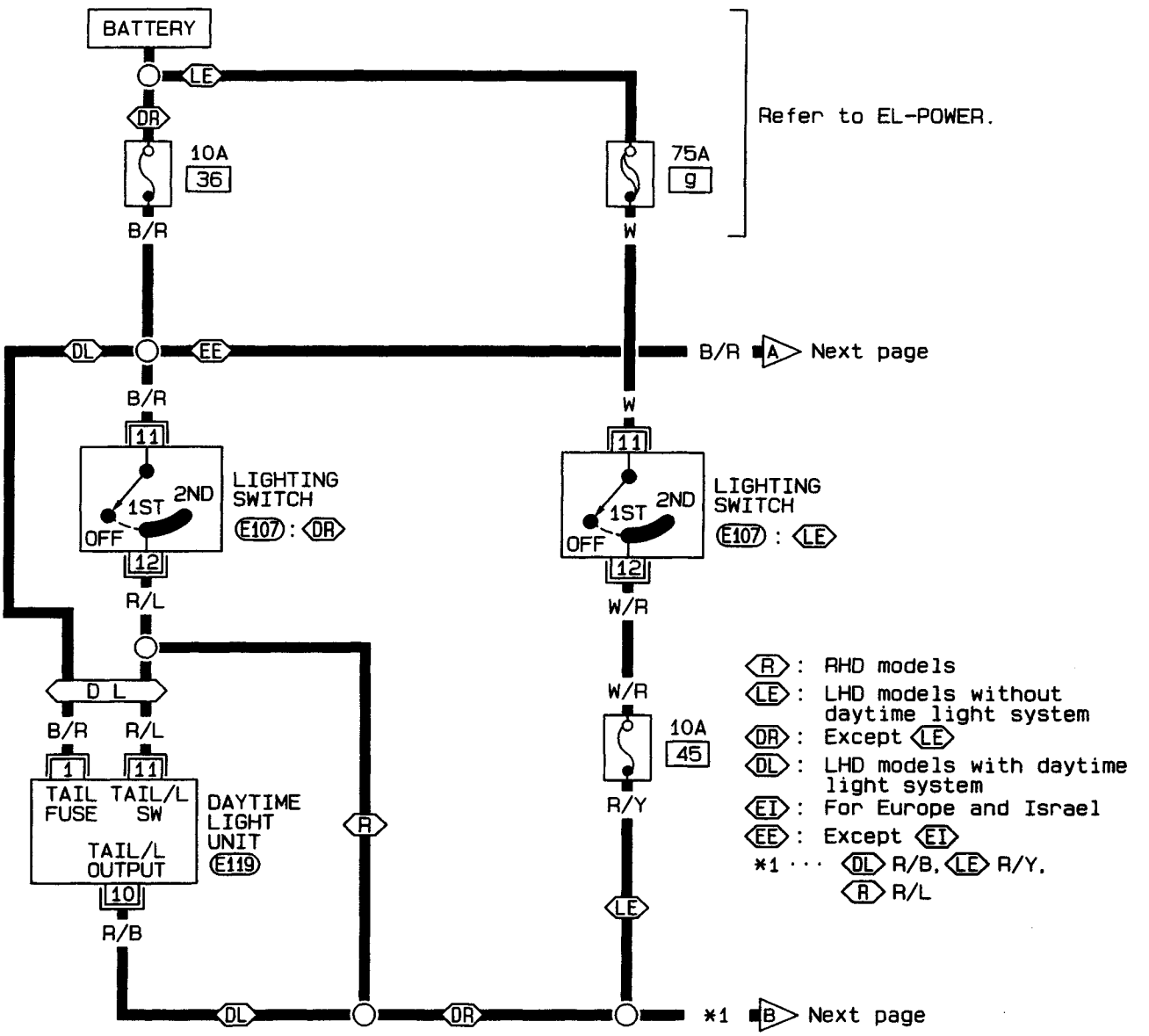

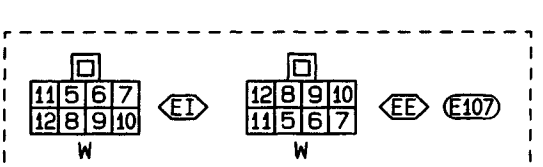

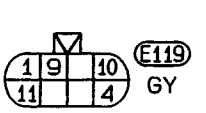

HEL053

Simpo PDF Merge and Split Unregistered Version - http://www.simpopdf.com

Illumination/Wiring Diagram — ILL — (Cont'd)

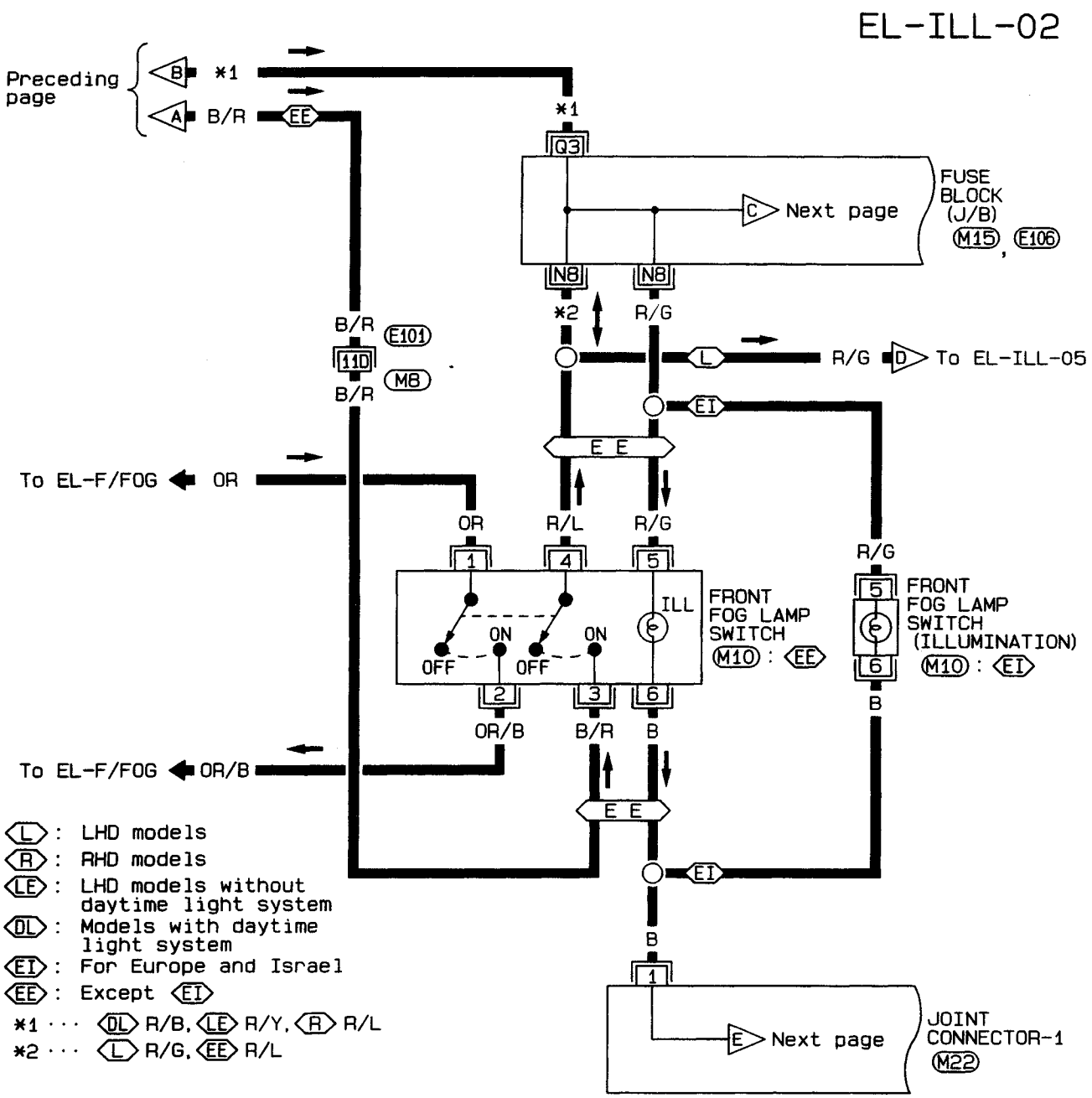

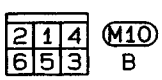

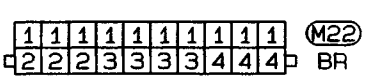

Refer to last page (Foldout page).

M8, E101
M15, E106

EL

HEL054

Simpo PDF Merge and Split Unregistered Version - http://www.simpopdf.com

Illumination/Wiring Diagram — ILL — (Cont'd)

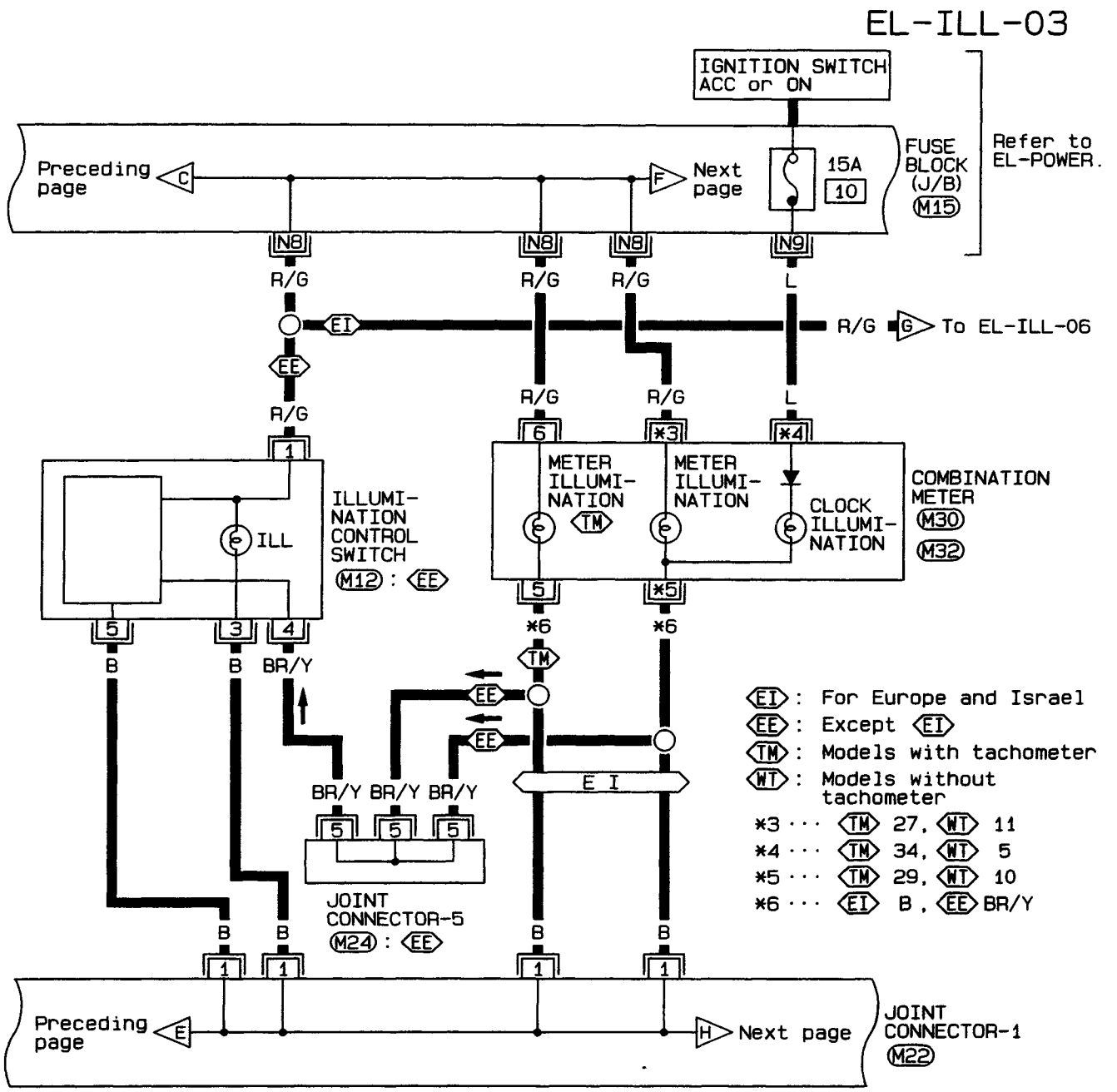

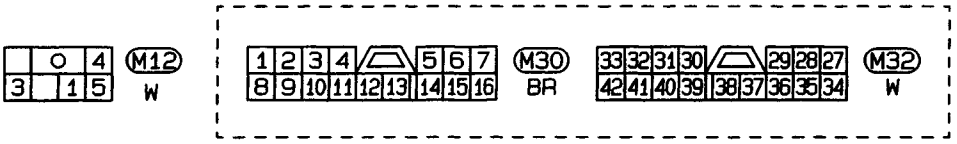

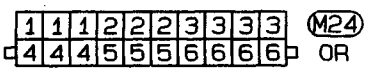

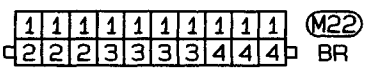

Refer to last page (Foldout page).

M15

HEL055

Simpo PDF Merge and Split Unregistered Version - http://www.simpopdf.com

Illumination/Wiring Diagram — ILL — (Cont'd)

EL-ILL-04

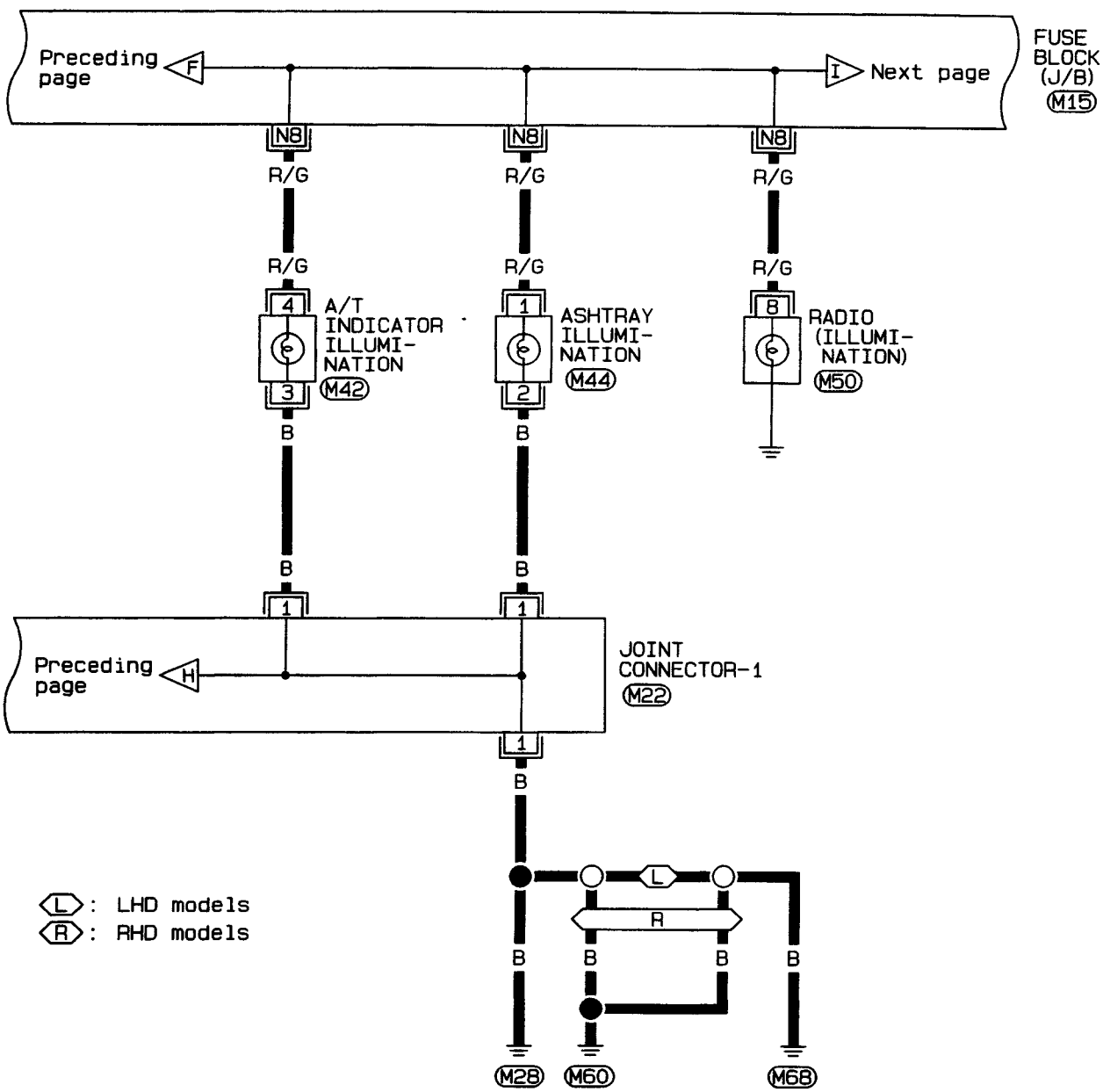

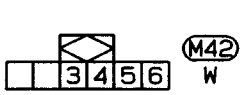



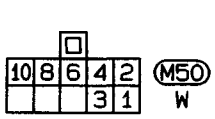

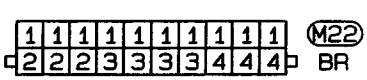

Refer to last page (Foldout page).

M15

EL

HEL056

Simpo PDF Merge and Split Unregistered Version - http://www.simpopdf.com

Illumination/Wiring Diagram — ILL — (Cont'd)

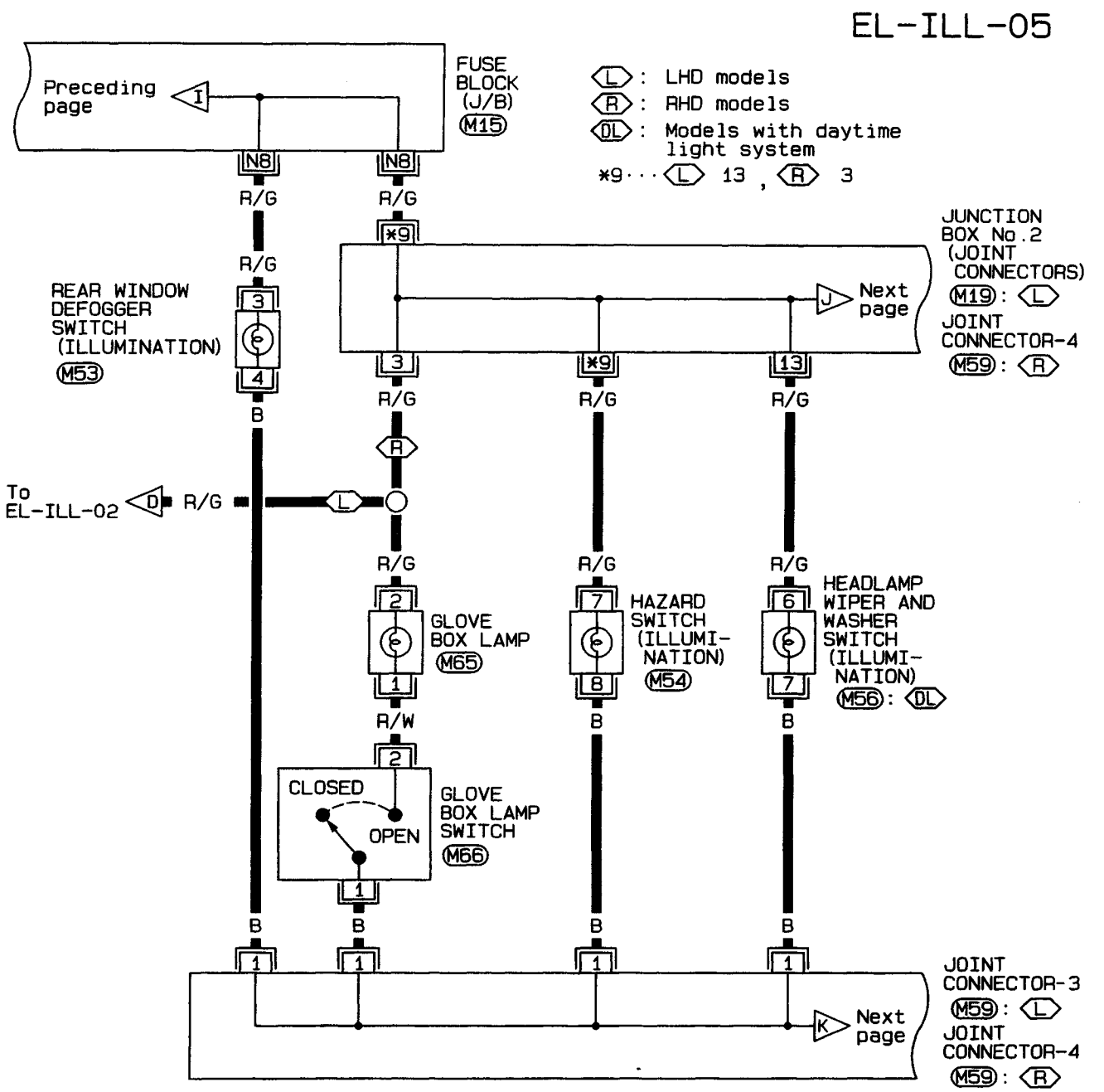

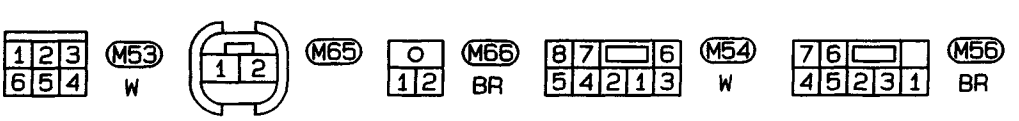

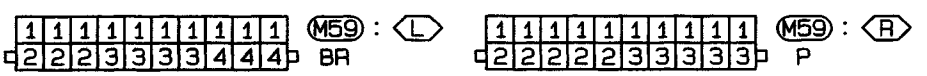

Refer to last page (Foldout page).

M15

M19

HEL057

Simpo PDF Merge and Split Unregistered Version - http://www.simpopdf.com

Illumination/Wiring Diagram — ILL — (Cont'd)

EL-ILL-06

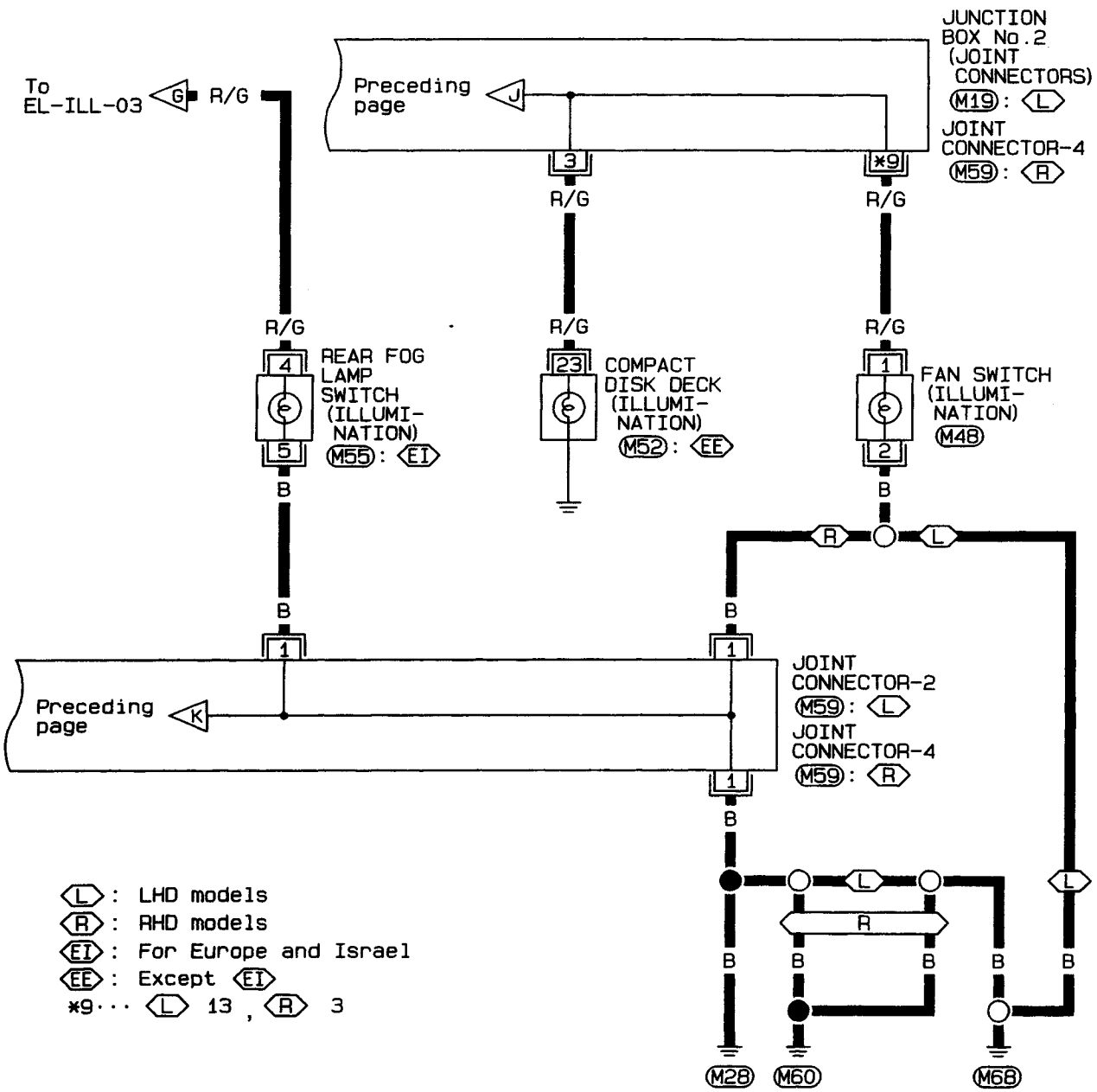

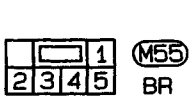

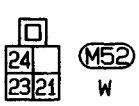

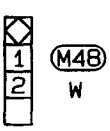

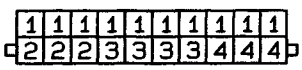

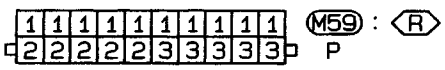

Refer to last page (Foldout page).

M19

EL

HEL058

Simpo PDF Merge and Split Unregistered Version - http://www.simpopdf.com

Interior, Spot, Trunk Room and Luggage Room Lamps/Wiring Diagram — INT/L —

LHD MODELS

EL-INT/L-01

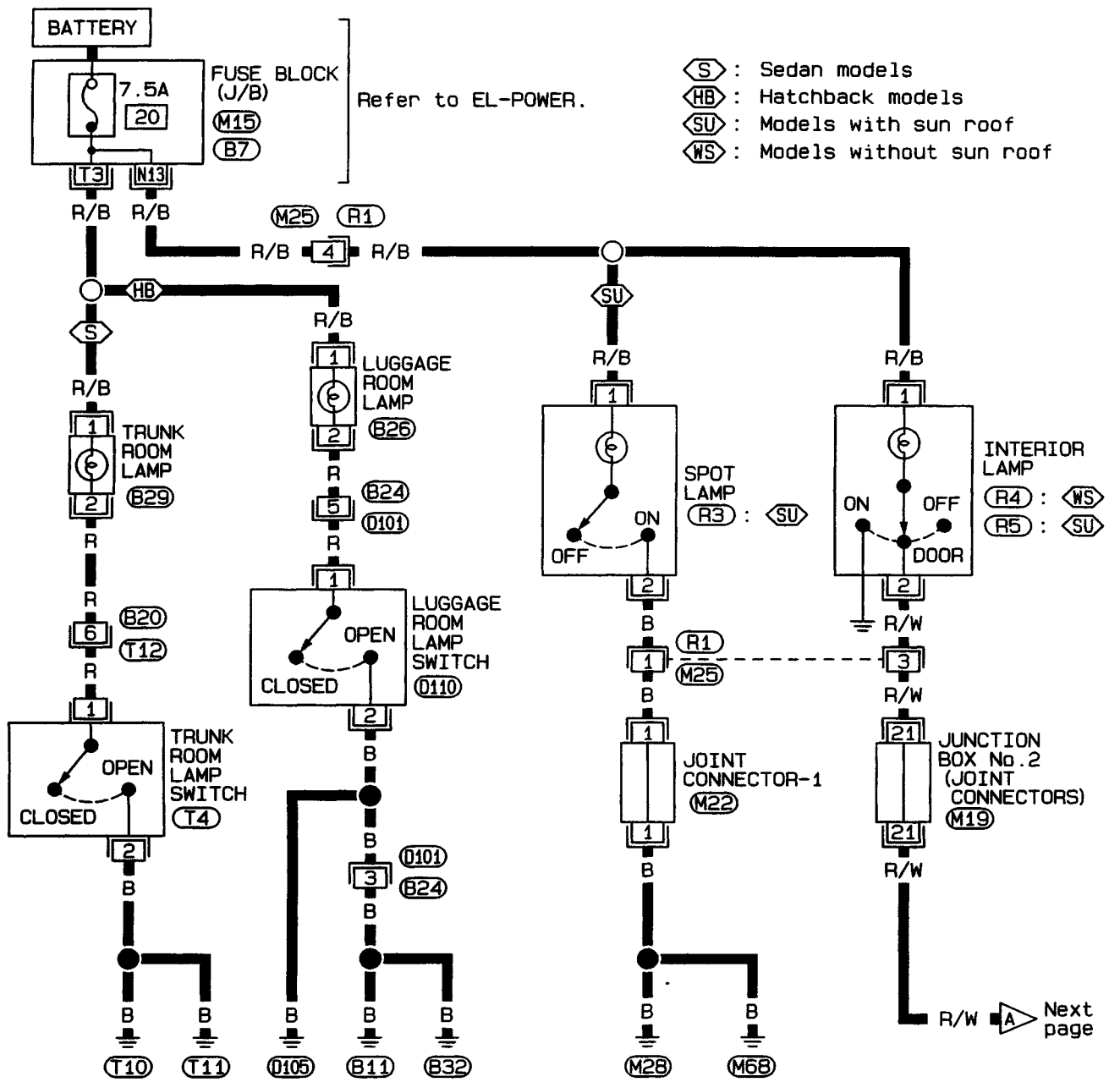

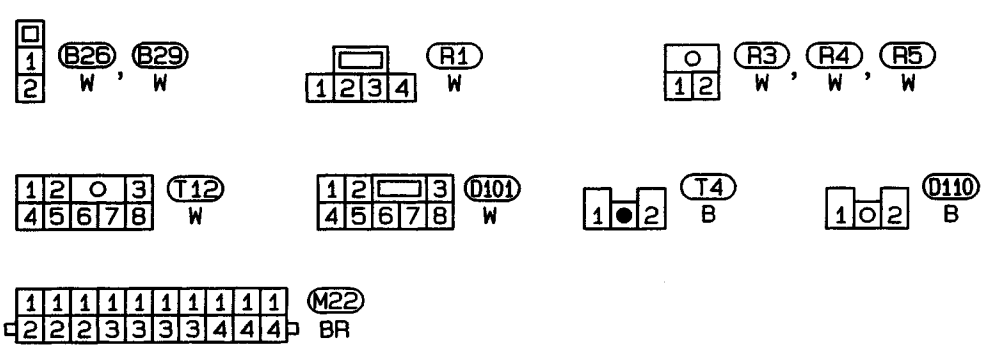

Refer to last page (Foldout page).

M15, B7
M19

HEL061

Simpo PDF Merge and Split Unregistered Version - http://www.simpopdf.com

Interior, Spot, Trunk Room and Luggage Room Lamps/Wiring Diagram — INT/L — (Cont'd)

EL-INT/L-02

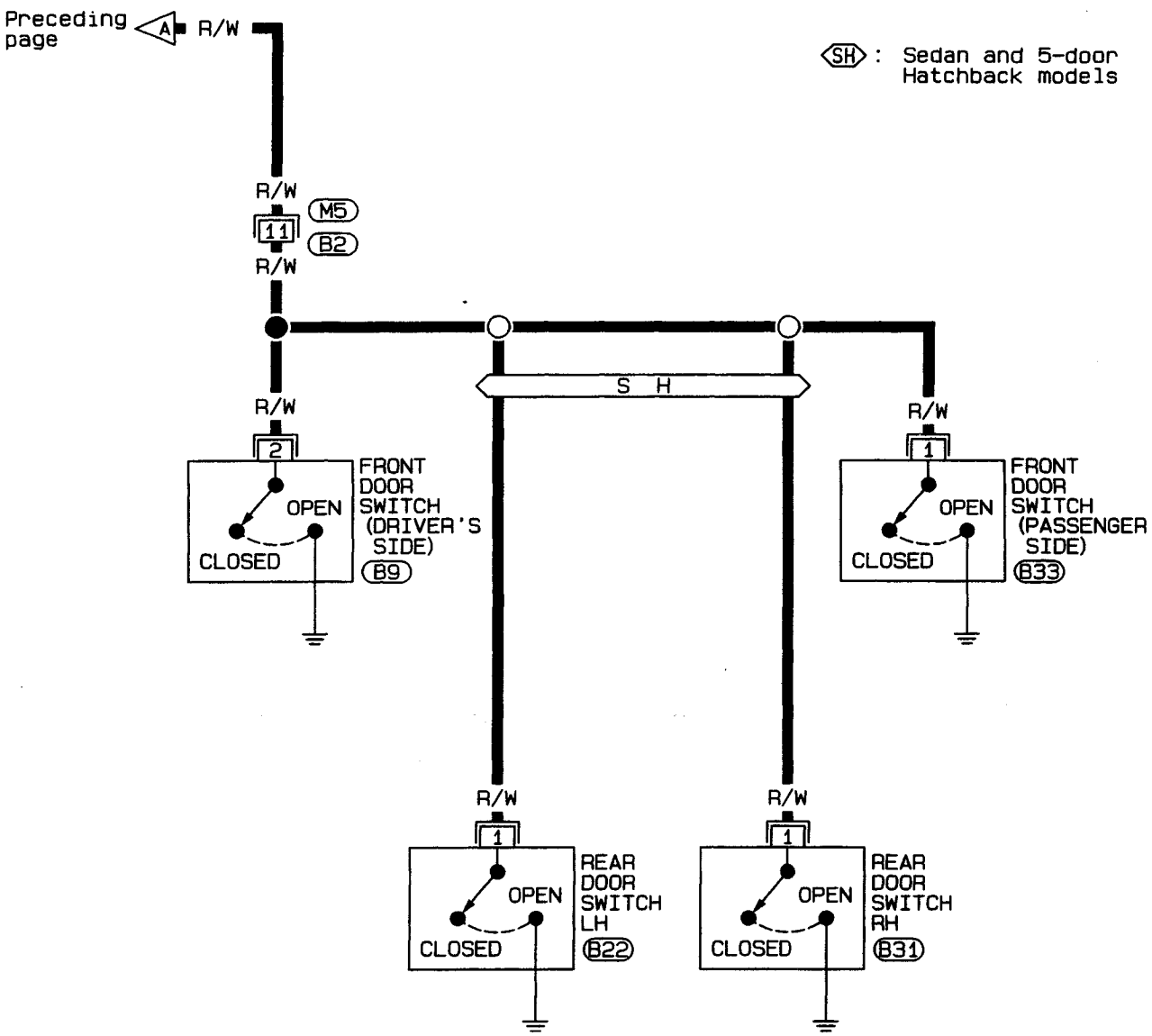

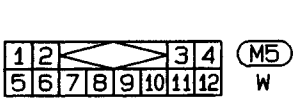

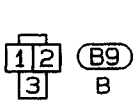

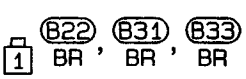

EL

HEL062

Simpo PDF Merge and Split Unregistered Version - http://www.simpopdf.com

Interior, Spot, Trunk Room and Luggage Room Lamps/Wiring Diagram — INT/L — (Cont'd)

RHD MODELS

EL-INT/L-03

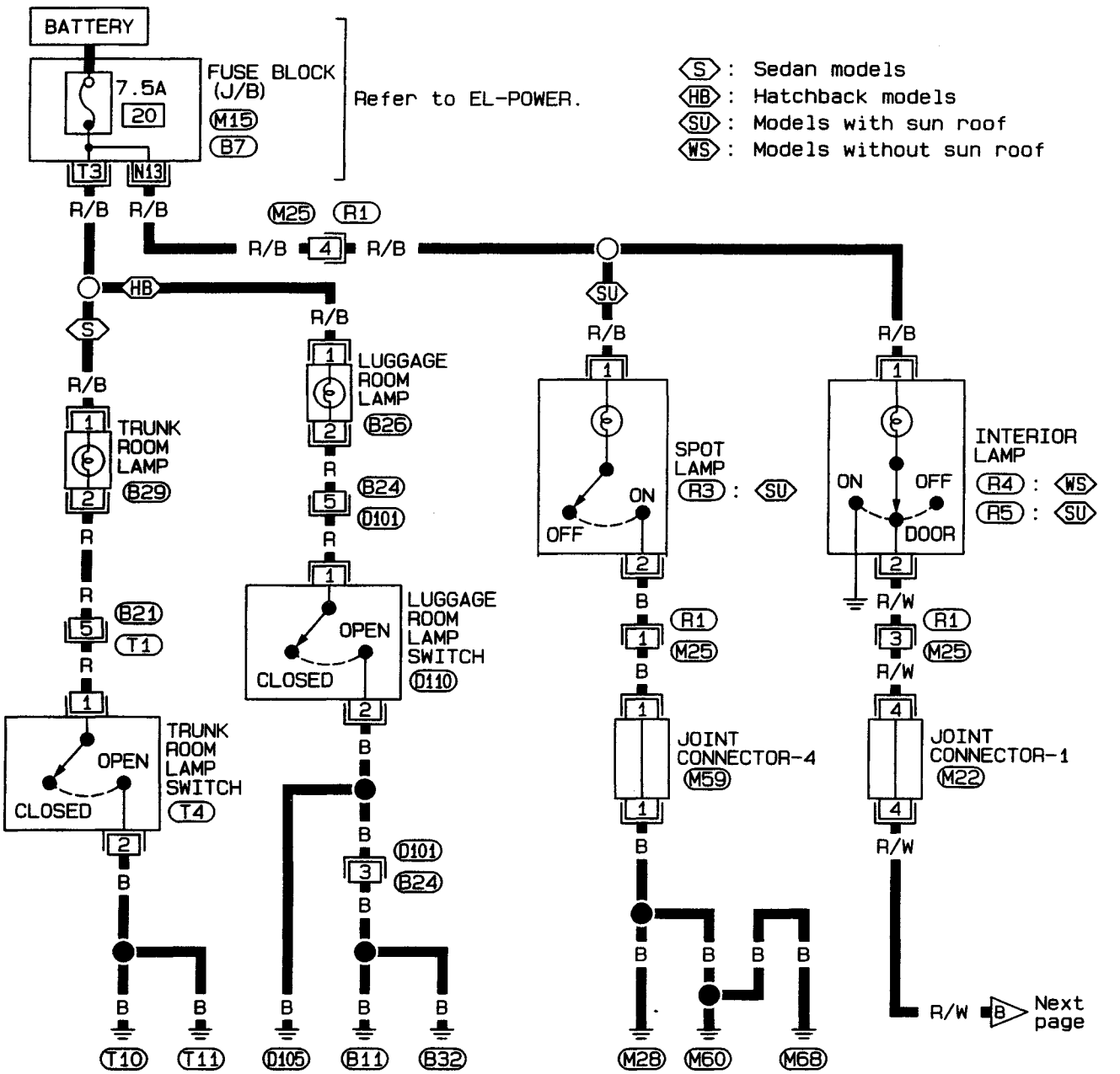

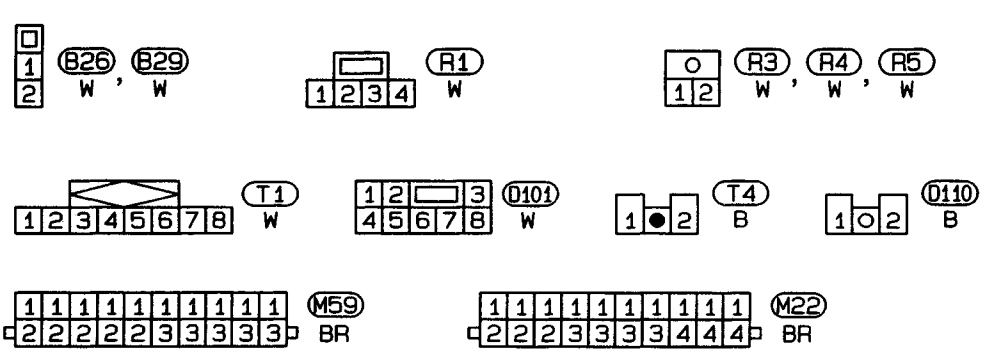

Refer to last page (Foldout page).

M15, B7

HEL063

Simpo PDF Merge and Split Unregistered Version - http://www.simpopdf.com

Interior, Spot, Trunk Room and Luggage Room Lamps/Wiring Diagram — INT/L — (Cont'd)

EL-INT/L-04

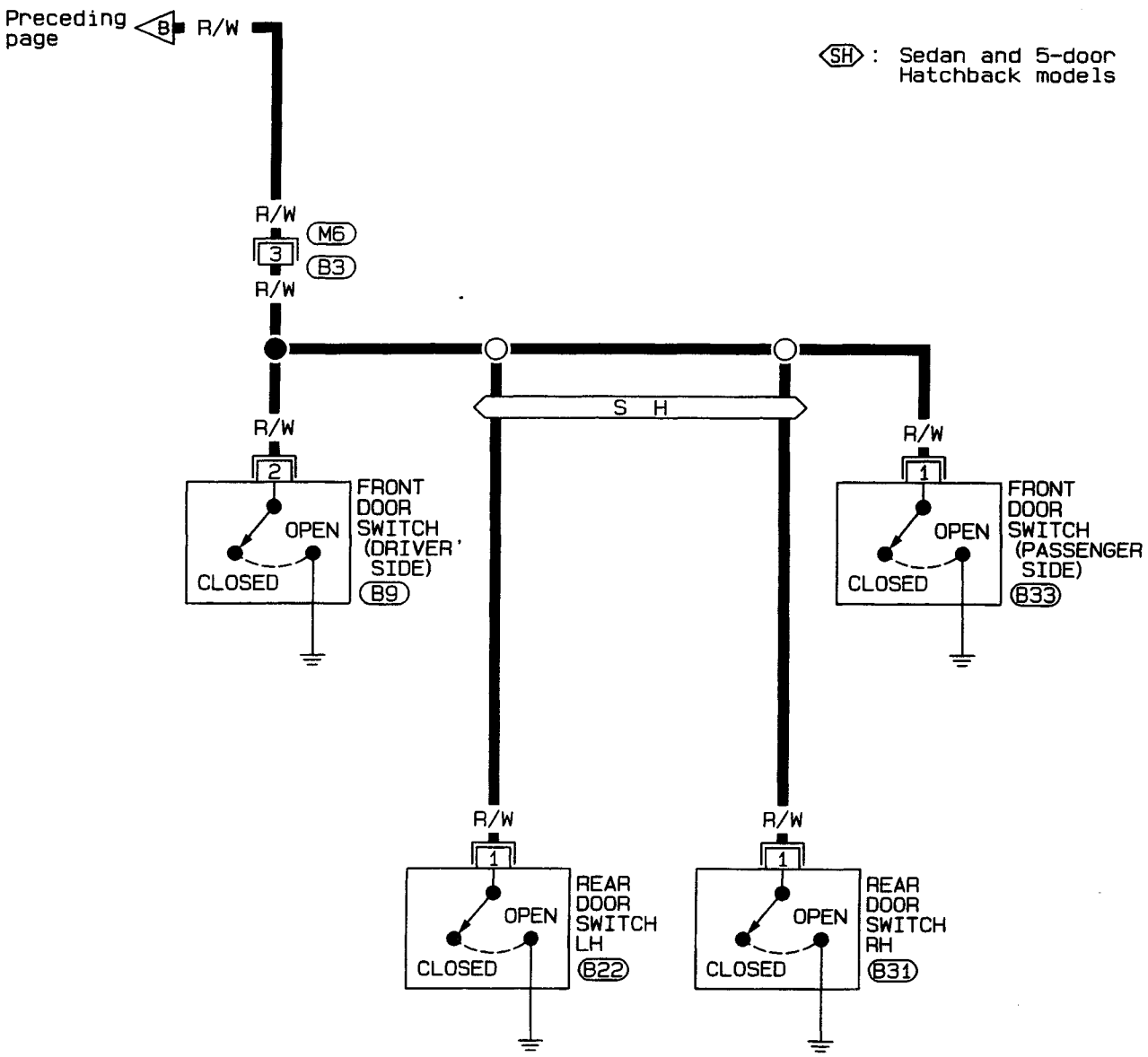

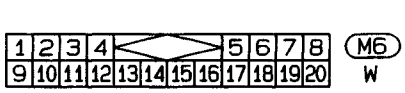

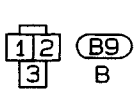

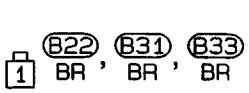

EL

HEL064

Simpo PDF Merge and Split Unregistered Version - http://www.simpopdf.com

Bulb Specifications

	Wattage (W)
Interior lamp	10
Spot lamp	10
Turn room lamp	3.4
Luggage room lamp	3.4

Simpo PDF Merge and Split Unregistered Version - http://www.simpopdf.com

Combination Meter

WITH TACHOMETER

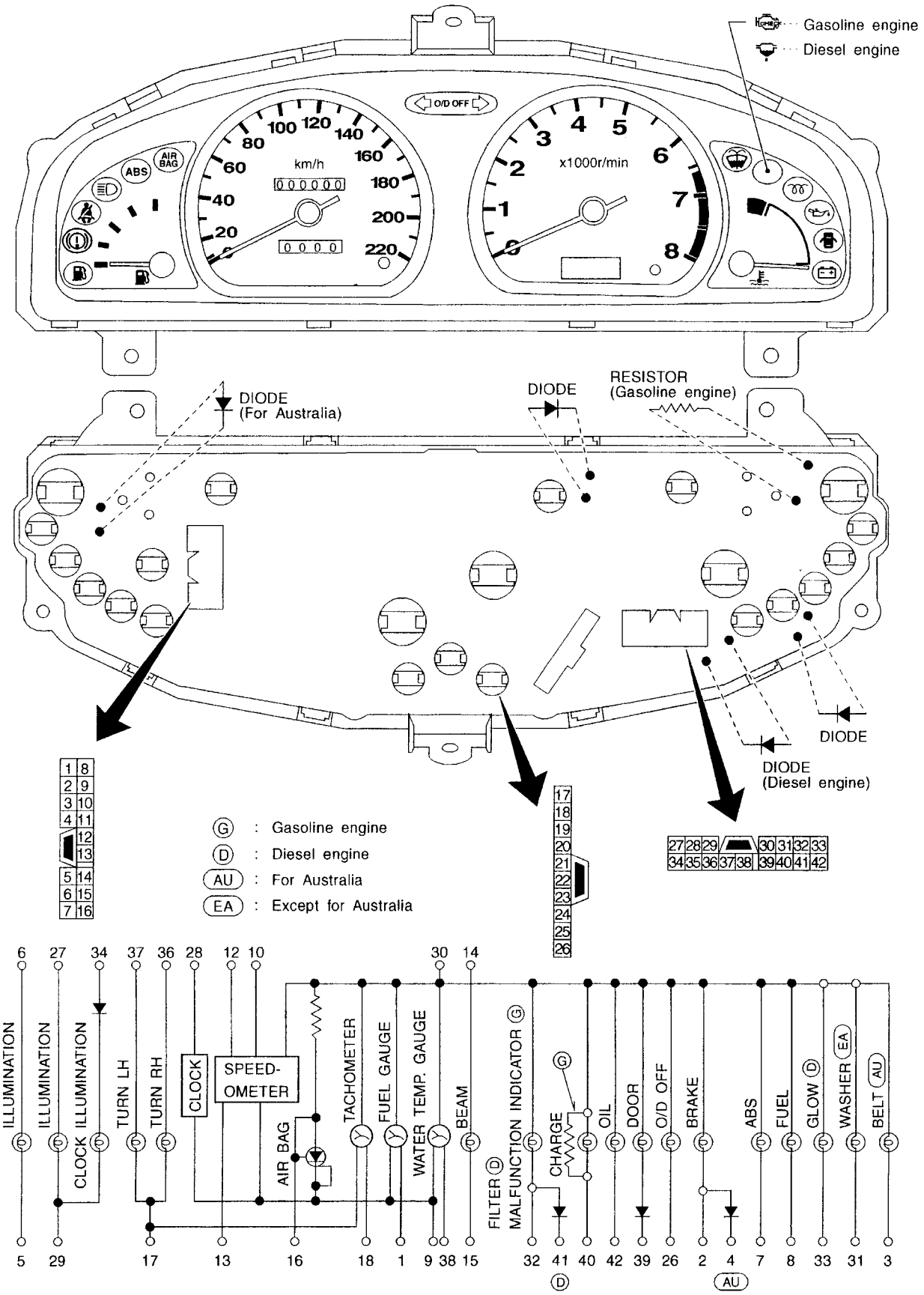

HEL065

Simpo PDF Merge and Split Unregistered Version - http://www.simpopdf.com

Combination Meter (Cont'd)

WITHOUT TACHOMETER

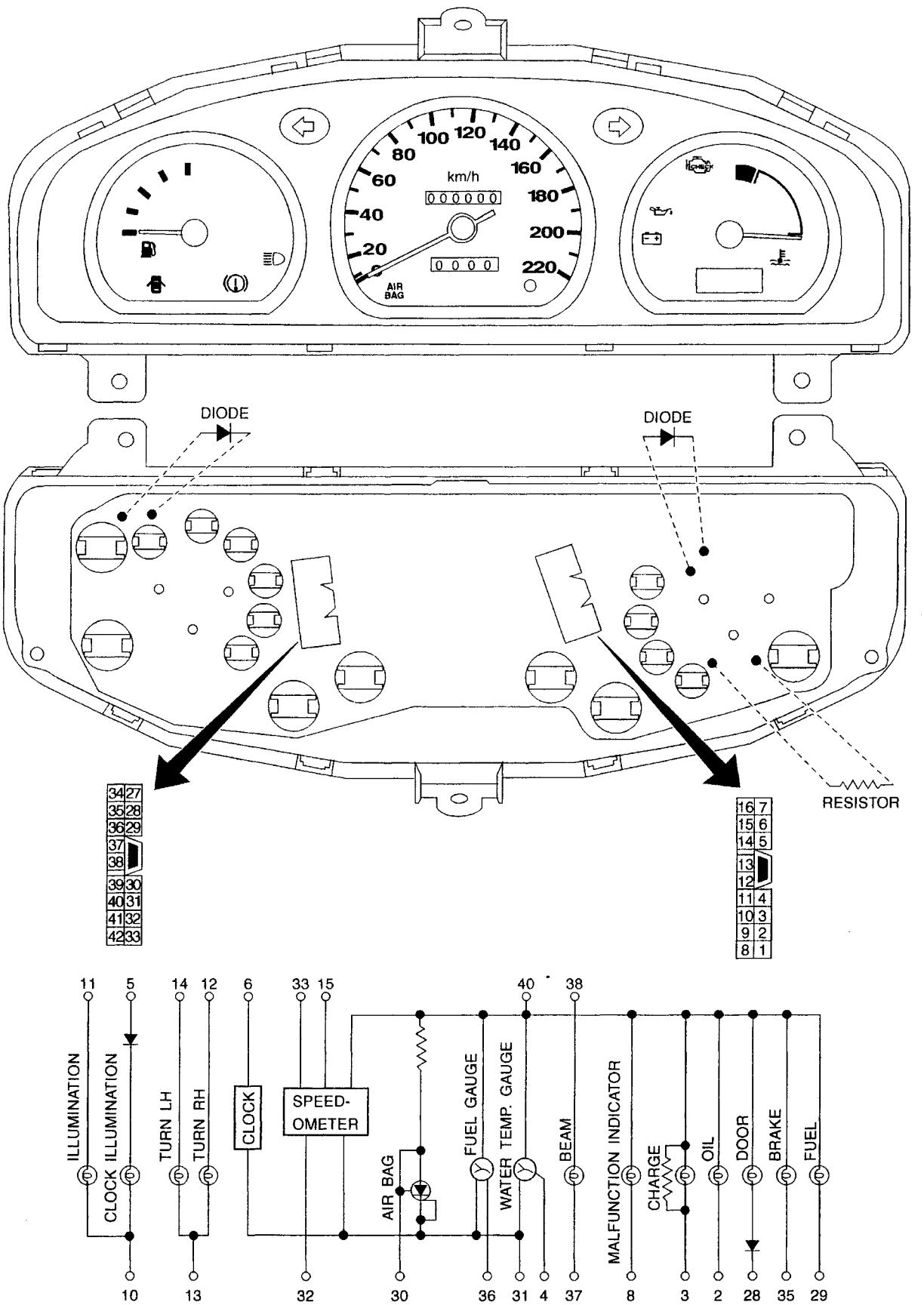

HEL066

Simpo PDF Merge and Split Unregistered Version - http://www.simpopdf.com

Speedometer, Tachometer, Temp. and Fuel Gauges/Wiring Diagram — METER —

LHD MODELS WITH TACHOMETER

EL-METER-01

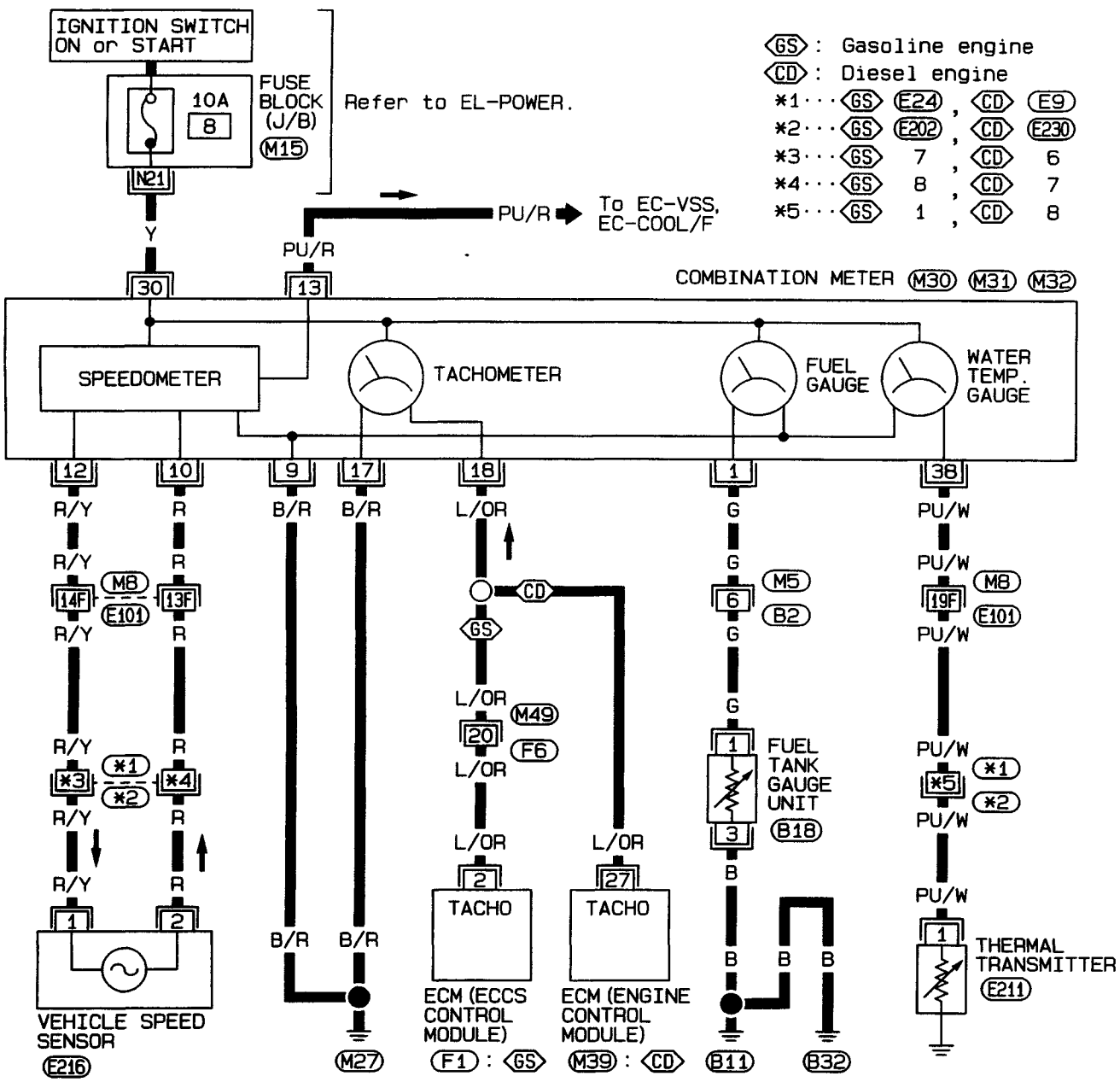

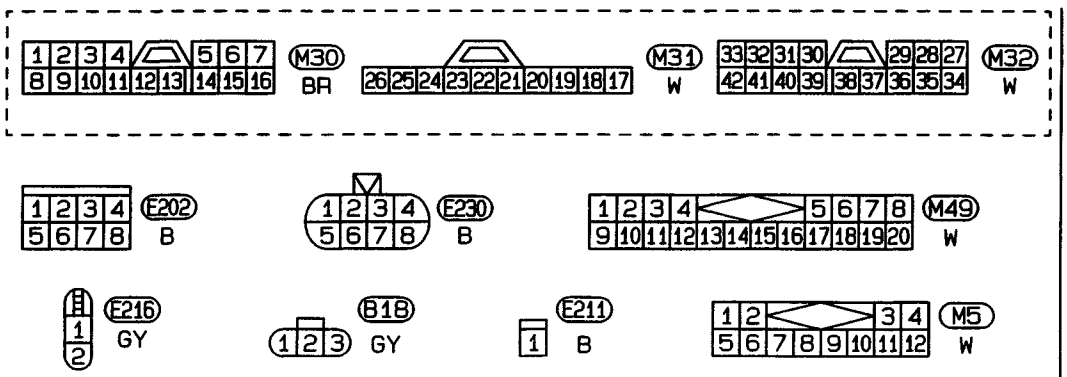

Refer to last page (Foldout page).

M8 , E101

M15

F1

M39

HEL067

EL

Simpo PDF Merge and Split Unregistered Version - http://www.simpopdf.com

Speedometer, Tachometer, Temp. and Fuel Gauges/Wiring Diagram — METER — (Cont'd)

LHD MODELS WITHOUT TACHOMETER

EL-METER-02

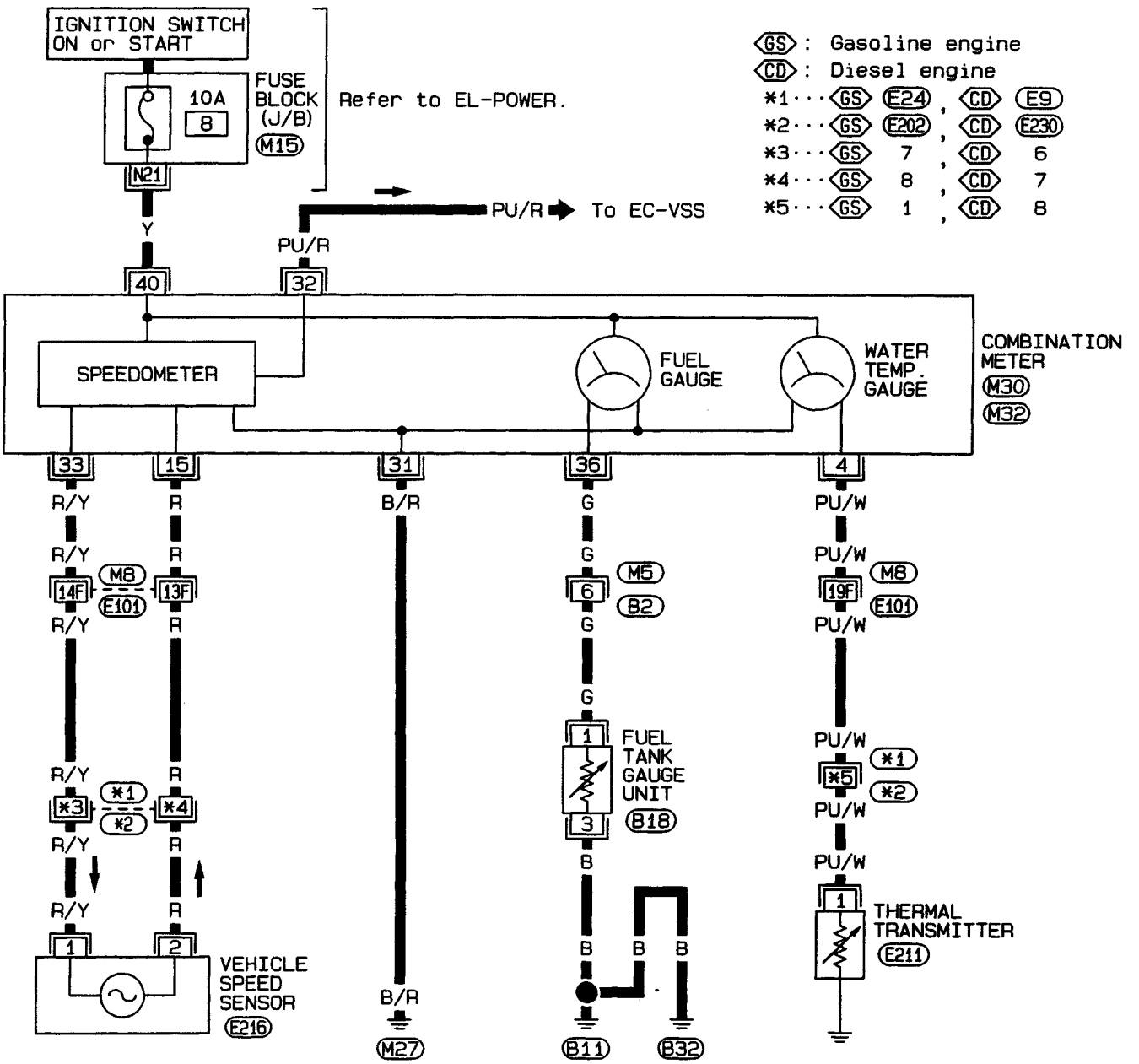

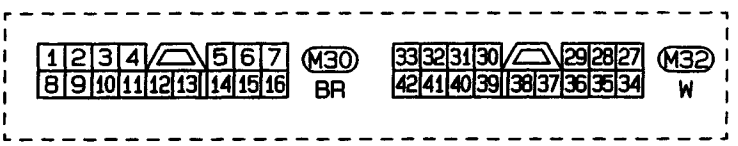

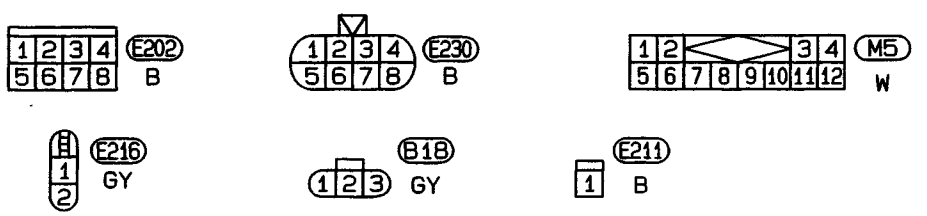

Refer to last page (Foldout page).

M8 , E101

M15

HEL068

Simpo PDF Merge and Split Unregistered Version - http://www.simpopdf.com

Speedometer, Tachometer, Temp. and Fuel Gauges/Wiring Diagram — METER — (Cont'd)

RHD MODELS WITH TACHOMETER

EL-METER-03

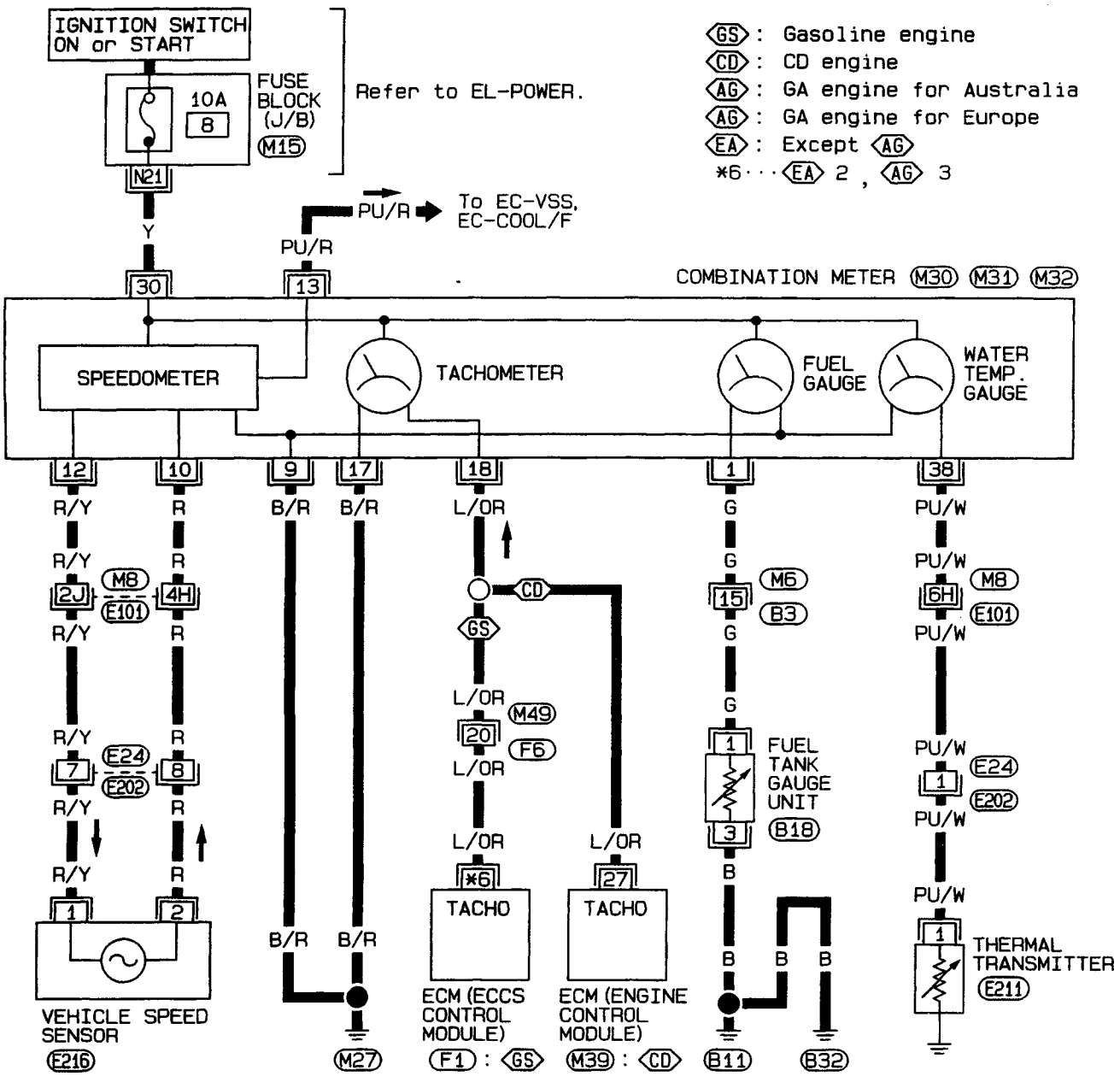

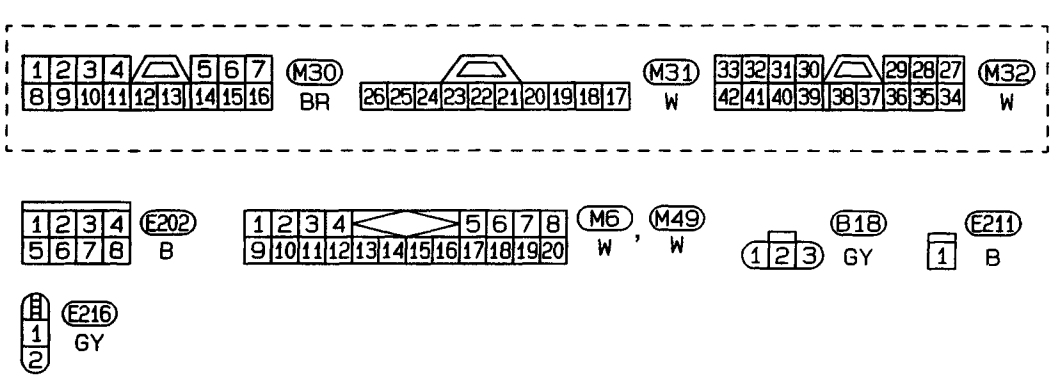

Refer to last page (Foldout page).
M8 , E101
M15
F1
M39

HEL069

EL

Simpo PDF Merge and Split Unregistered Version - http://www.simpopdf.com

Speedometer, Tachometer, Temp. and Fuel Gauges/Wiring Diagram — METER — (Cont'd)

RHD MODELS WITHOUT TACHOMETER

EL-METER-04

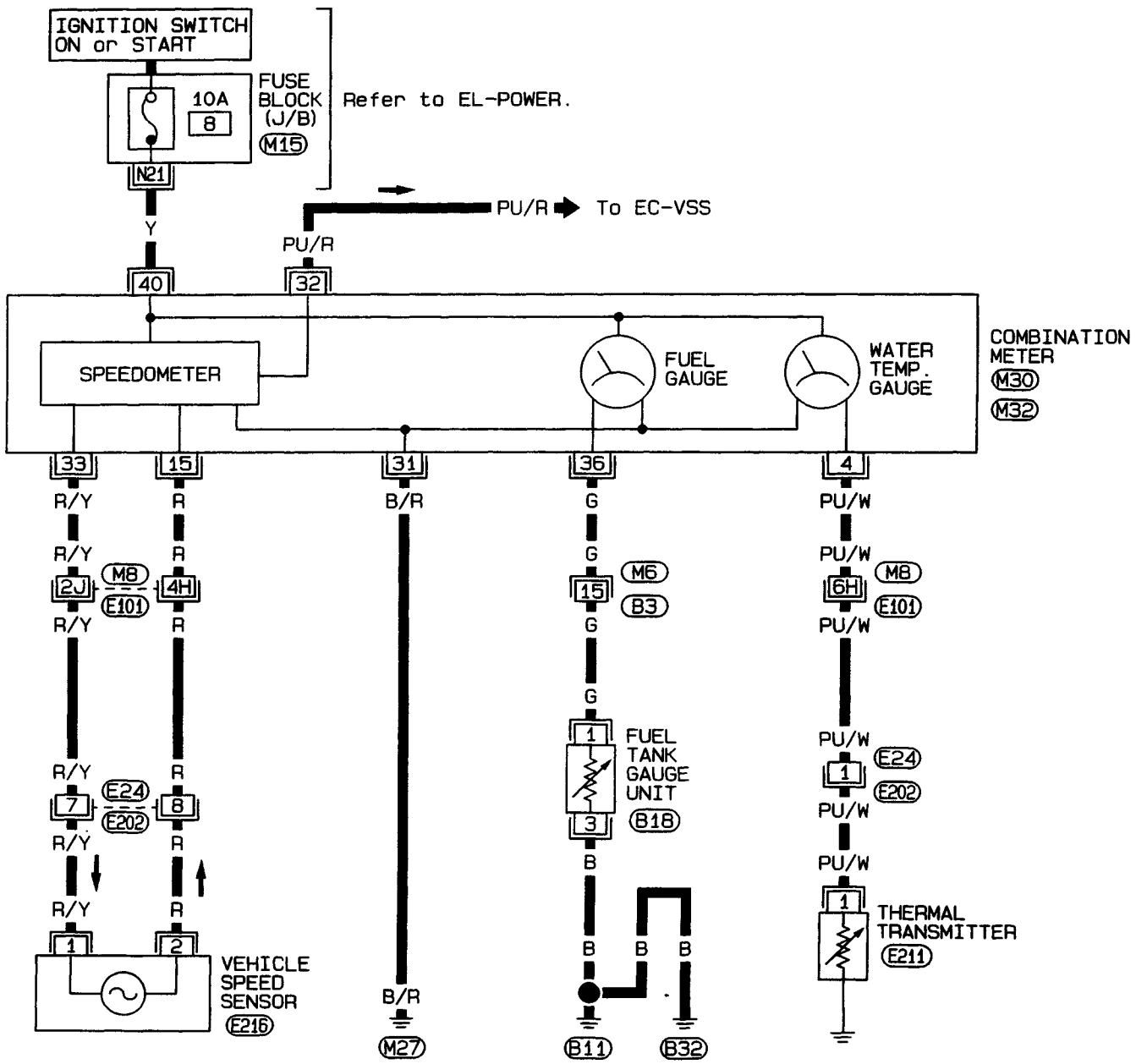

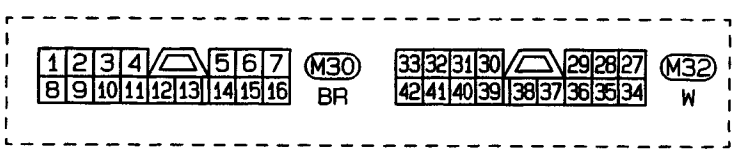

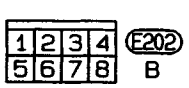

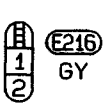

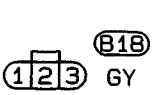

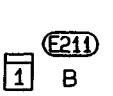

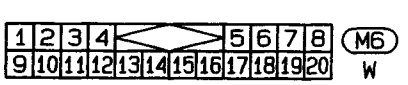

Refer to last page (Foldout page).

M8 , E101

M15

HEL070

Simpo PDF Merge and Split Unregistered Version - http://www.simpopdf.com

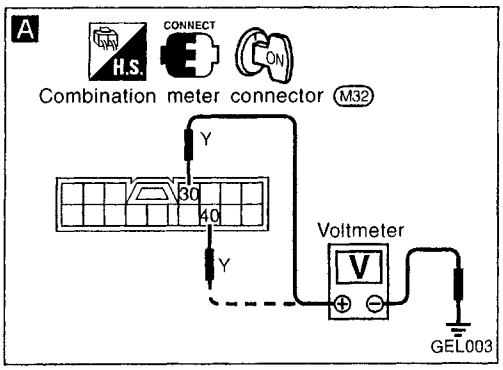

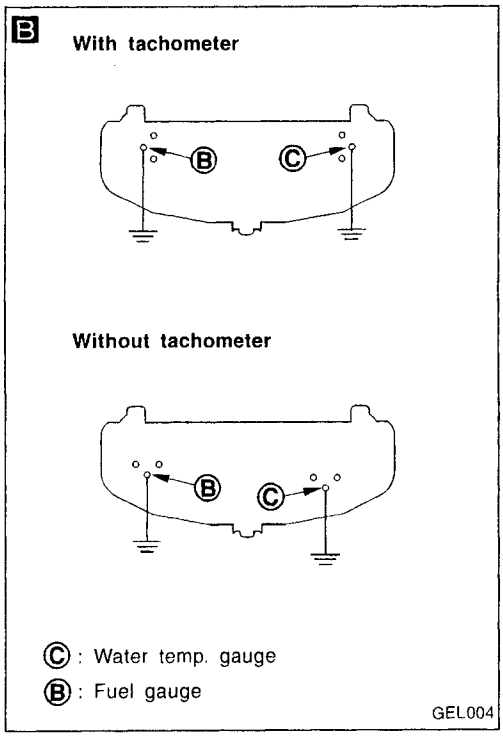

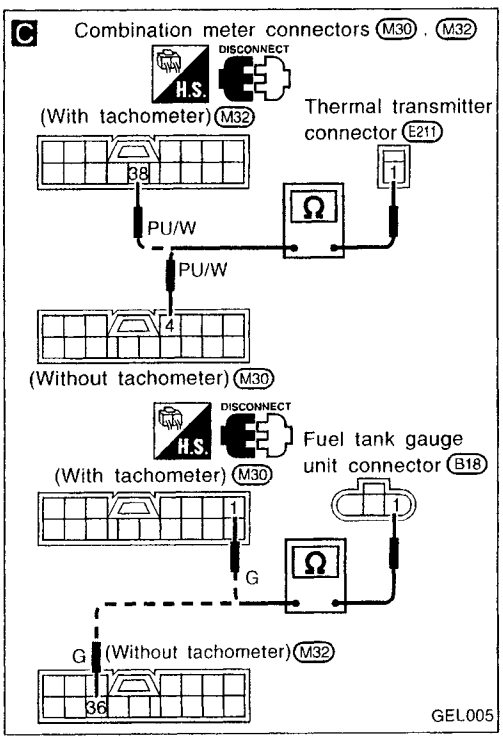

Inspection/Fuel Gauge and Water Temperature Gauge

INSPECTION START

A

CHECK POWER SOURCE.
1) Turn ignition switch "ON".
2) Check voltage between terminal ㉚ (with tachometer) or ㊵ (without tachometer) and ground.
Battery voltage should exist.

NG → Check the following items.
1) Harness continuity between battery terminal and combination meter
2) Ignition relay
3) Fusible link and fuse
4) Ignition switch

OK ↓

B

CHECK GAUGE OPERATION.
1) Turn ignition switch "ON".
2) Connect terminals Ⓑ (Fuel), Ⓒ (Temp.) and ground with wire for **less than 10 seconds.**
3) Check operation of gauge.
Gauge should move smoothly to full scale.

NG → Repair or replace gauge.

OK ↓

C

CHECK HARNESS CONTINUITY between terminals as follows.
Continuity should exist.

NG → Repair or replace.

	Terminals		
	Combination meter connector	Thermal transmitter connector	Fuel tank gauge unit connector
With tachometer	㊳	①	
	①		①
Without tachometer	④	①	
	㊱		①

OK ↓

CHECK COMPONENT.
Check gauge units and harness.
Refer to "Fuel Tank Gauge Unit Check" (EL-137) or "Thermal Transmitter Check" (EL-137).

NG → Repair or replace.
Refer to FE section. (Fuel gauge)

OK ↓

(Go to Ⓐ on next page)

EL

Simpo PDF Merge and Split Unregistered Version - http://www.simpopdf.com

Inspection/Fuel Gauge and Water Temperature Gauge (Cont'd)

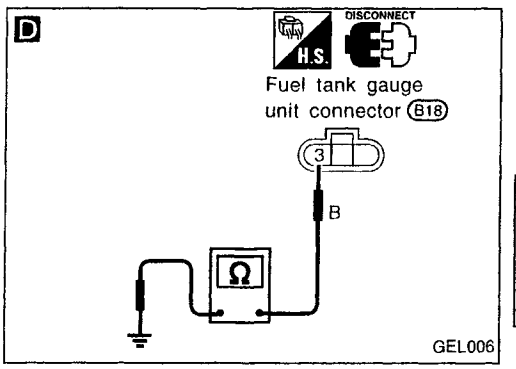

Ⓐ

D

Check harness continuity between fuel tank gauge unit harness terminal ③ and body ground.
Continuity should exist.

NG → Repair harness or connector.

OK ↓

Reinstall any part removed.

↓

INSPECTION END

Inspection/Tachometer

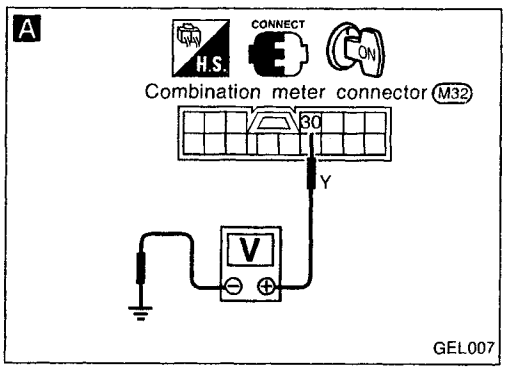

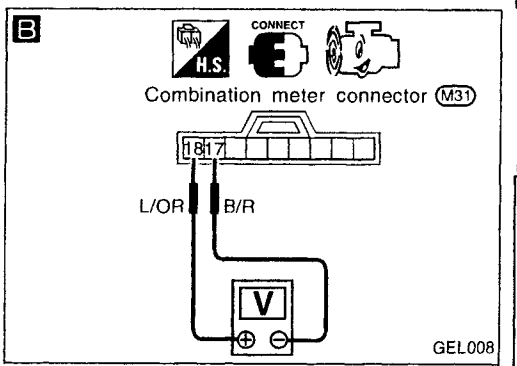

INSPECTION START

↓

A

CHECK POWER SOURCE.
1) Turn ignition switch "ON".
2) Check voltage between terminal ㉚ and ground.
Battery voltage should exist.

NG → Check the following items.
1) Harness continuity between battery terminal and combination meter
2) Ignition relay
3) Fusible link and fuse
4) Ignition switch

OK ↓

B

CHECK ECM OUTPUT.
1) Start engine.
2) Check voltage between terminals ⑱ and ⑰ at idle and 2,000 rpm.
Higher rpm = Higher voltage
Lower rpm = Lower voltage
Voltage should change with rpm.

NG → Check harness and connector between ECM and combination meter, or check ground.

OK ↓

Replace tachometer.

↓

INSPECTION END

Simpo PDF Merge and Split Unregistered Version - http://www.simpopdf.com

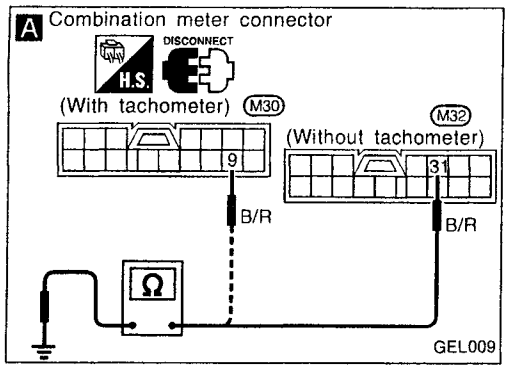

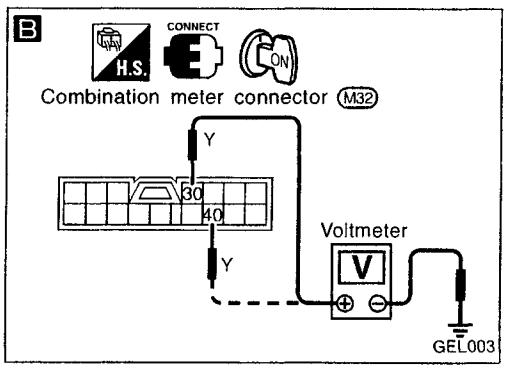

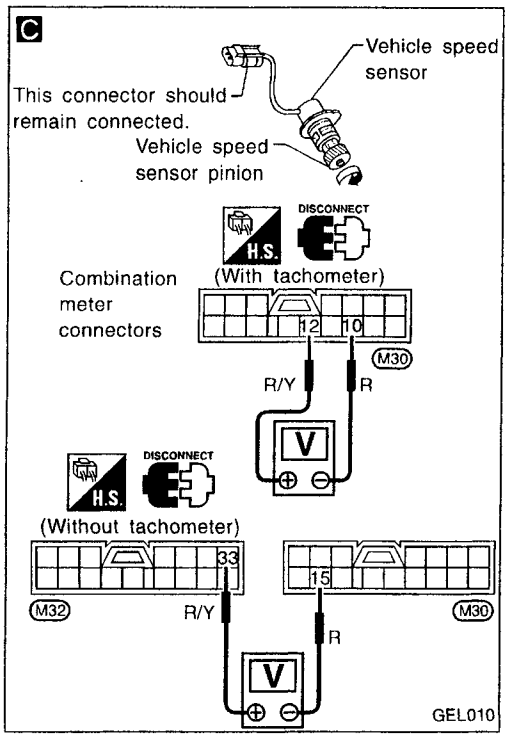

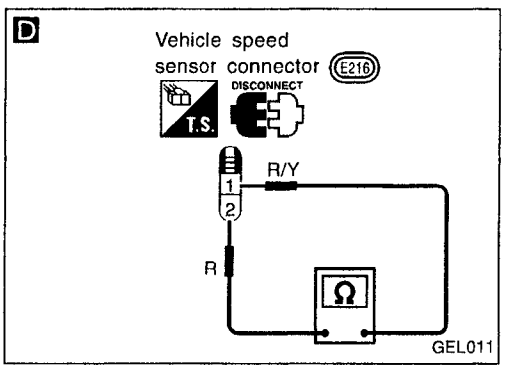

Inspection/Speedometer and Vehicle Speed Sensor

SYMPTOM: Speedometer stays at 0 km/h (0 MPH).

INSPECTION START

A CHECK GROUND CIRCUIT OF SPEEDOMETER.
Check continuity between terminal ⑨ (with tachometer) or ㉛ (without tachometer) and body ground.
Continuity should exist.

NG → Repair harness or connector.

OK

B CHECK SPEEDOMETER CIRCUIT.
1) Turn ignition switch "ON".
2) Check voltage between terminal ㉚ (with tachometer) or ㊵ (without tachometer) and body ground.
Battery voltage should exist.

NG → Repair harness or connector.

OK

C CHECK VEHICLE SPEED SENSOR OUTPUT.
1) Remove vehicle speed sensor from transaxle.
2) Check voltage between terminals ⑫ and ⑩ (with tachometer) or ㉝ and ⑮ (without tachometer) while quickly turning speed sensor pinion.
Voltage: Approx. 0.5V

OK → Replace speedometer.

NG

D CHECK VEHICLE SPEED SENSOR.
Check resistance between terminals ① and ②.
Resistance: Approx. 250Ω.

NG → Replace vehicle speed sensor.

OK

Repair harness or connector between speedometer and vehicle speed sensor.

INSPECTION END

EL

Simpo PDF Merge and Split Unregistered Version - http://www.simpopdf.com

Inspection/Speedometer and Vehicle Speed Sensor (Cont'd)

SYMPTOM: Speedometer indication flutters.

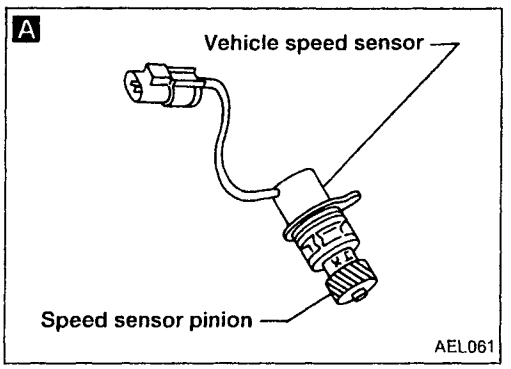

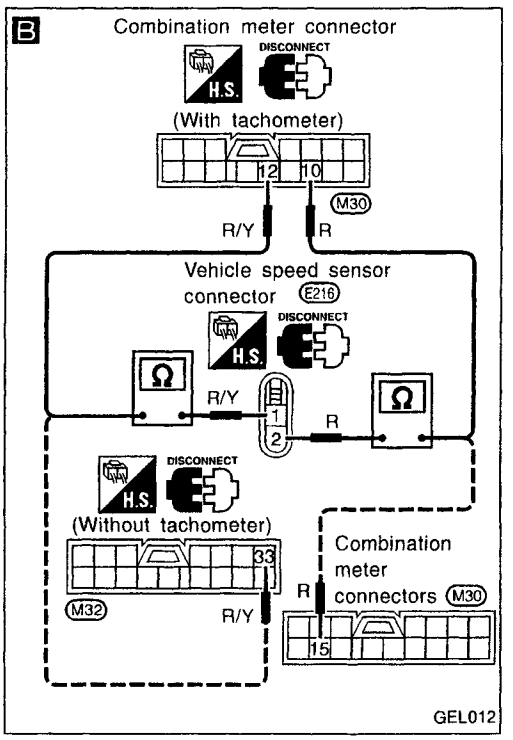

INSPECTION START

↓

Is vehicle speed sensor installed properly? Check looseness and so on. — NG → Install vehicle speed sensor properly.

↓ OK

A

Do you feel resistance when turning vehicle speed sensor pinion? — No → Replace vehicle speed sensor.

↓ Yes

B

Check continuity between speedometer terminals and vehicle speed sensor terminals. — NG → Repair harness and connector.

Continuity should exist.

Combination meter terminal		Vehicle speed sensor terminal
With tachometer	⑫	①
	⑩	②
Without tachometer	㉝	①
	⑮	②

↓ OK

Replace speedometer.

Simpo PDF Merge and Split Unregistered Version - http://www.simpopdf.com

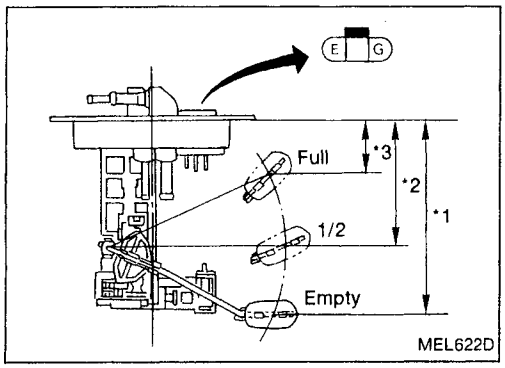

Fuel Tank Gauge Unit Check

- For removal, refer to FE section (''FUEL SYSTEM'').

Check the resistance between terminals (G) and (E).

Ohmmeter (+)	Ohmmeter (−)	Float position mm (in)			Resistance value (Ω)
G	E	*3	Full	36 (1.42)	Approx. 4 - 6
		*2	1/2	86 (3.39)	27 - 35
		*1	Empty	131 (5.16)	78 - 85

*1 and *3: When float rod is in contact with stopper.

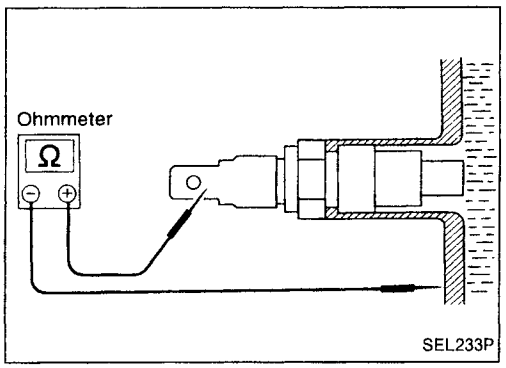

Thermal Transmitter Check

Check the resistance between the terminals of thermal transmitter and body ground.

Water temperature	Resistance
60°C (140°F)	Approx. 70 - 90Ω
100°C (212°F)	Approx. 21 - 24Ω

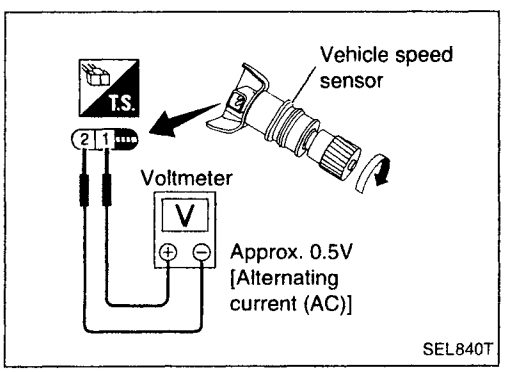

Vehicle Speed Sensor Signal Check

1. Remove vehicle speed sensor from transaxle.
2. Turn speedometer pinion quickly and measure voltage across ① and ②.

EL

Simpo PDF Merge and Split Unregistered Version - http://www.simpopdf.com

Warning Lamps/Schematic

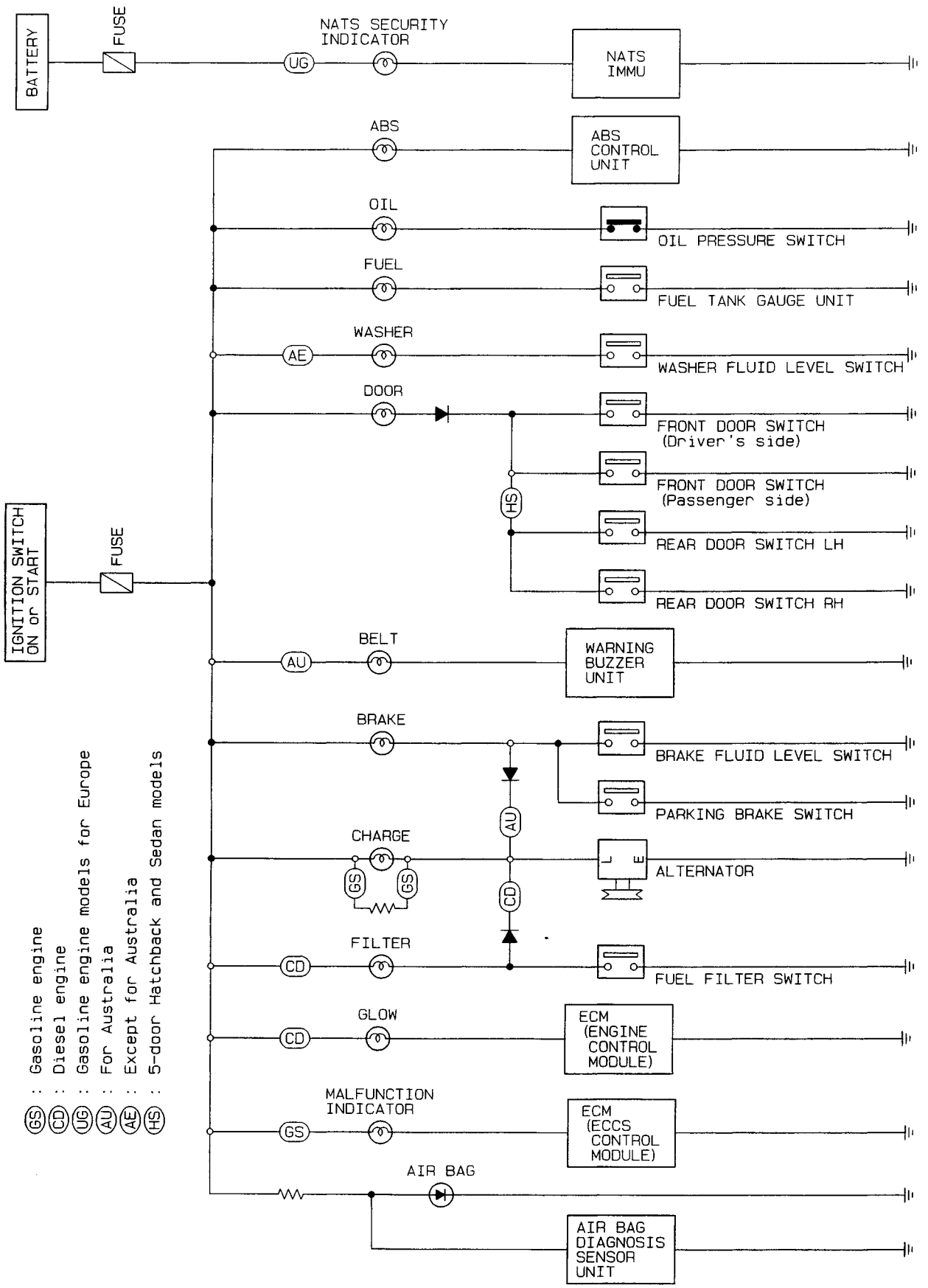

HEL082

Simpo PDF Merge and Split Unregistered Version - http://www.simpopdf.com

Warning Lamps/Wiring Diagram — WARN —

LHD MODELS WITH TACHOMETER

EL-WARN-01

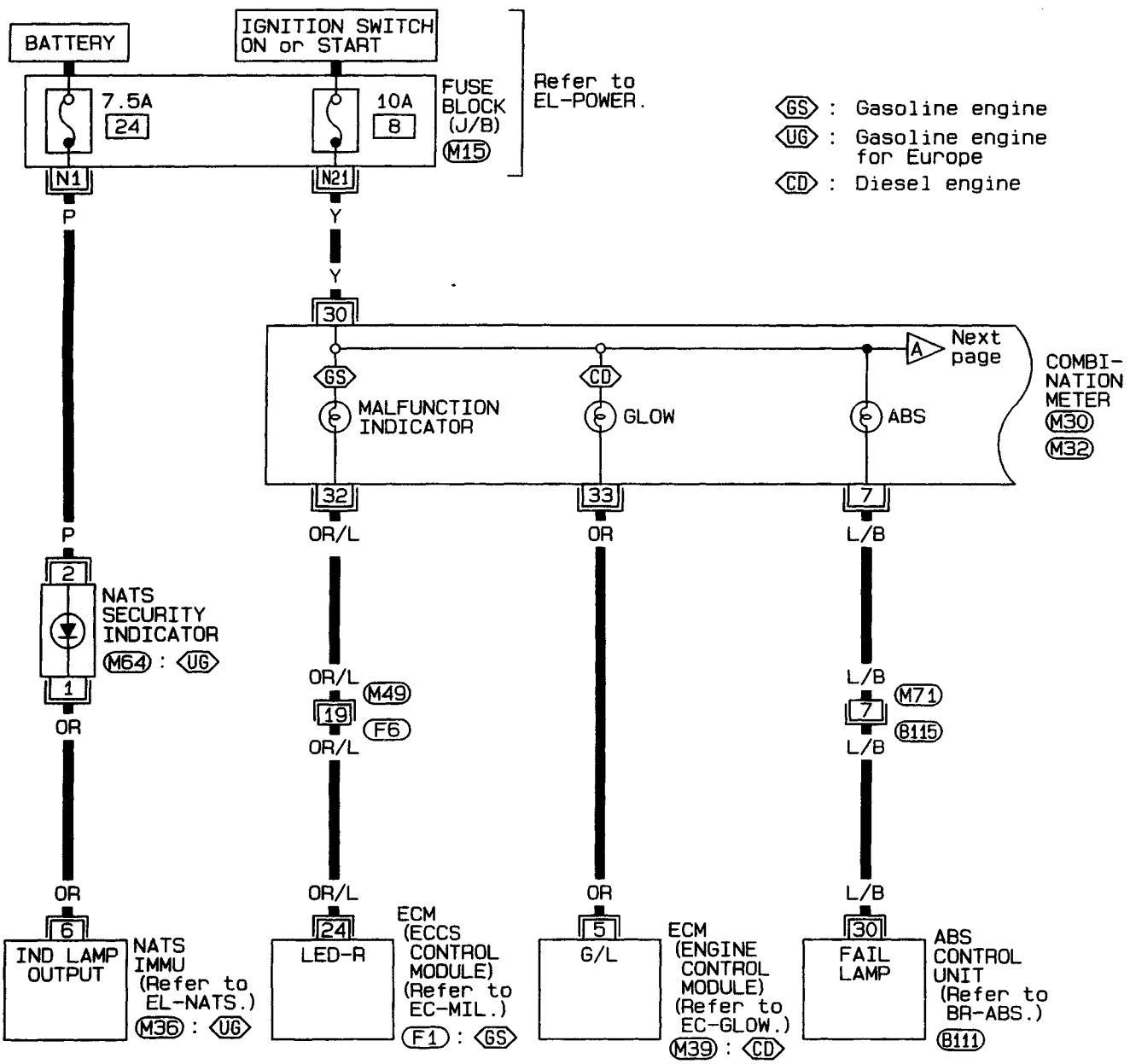

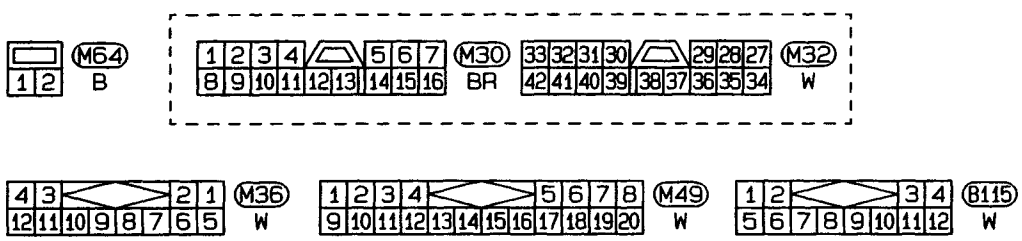

Refer to last page (Foldout page).

M15

F1

M39

B111

EL

HEL071

Simpo PDF Merge and Split Unregistered Version - http://www.simpopdf.com

Warning Lamps/Wiring Diagram — WARN — (Cont'd)

EL-WARN-02

GS : Gasoline engine
CD : Diesel engine
DA : Models with dual air bag system
SA : Models with single air bag system

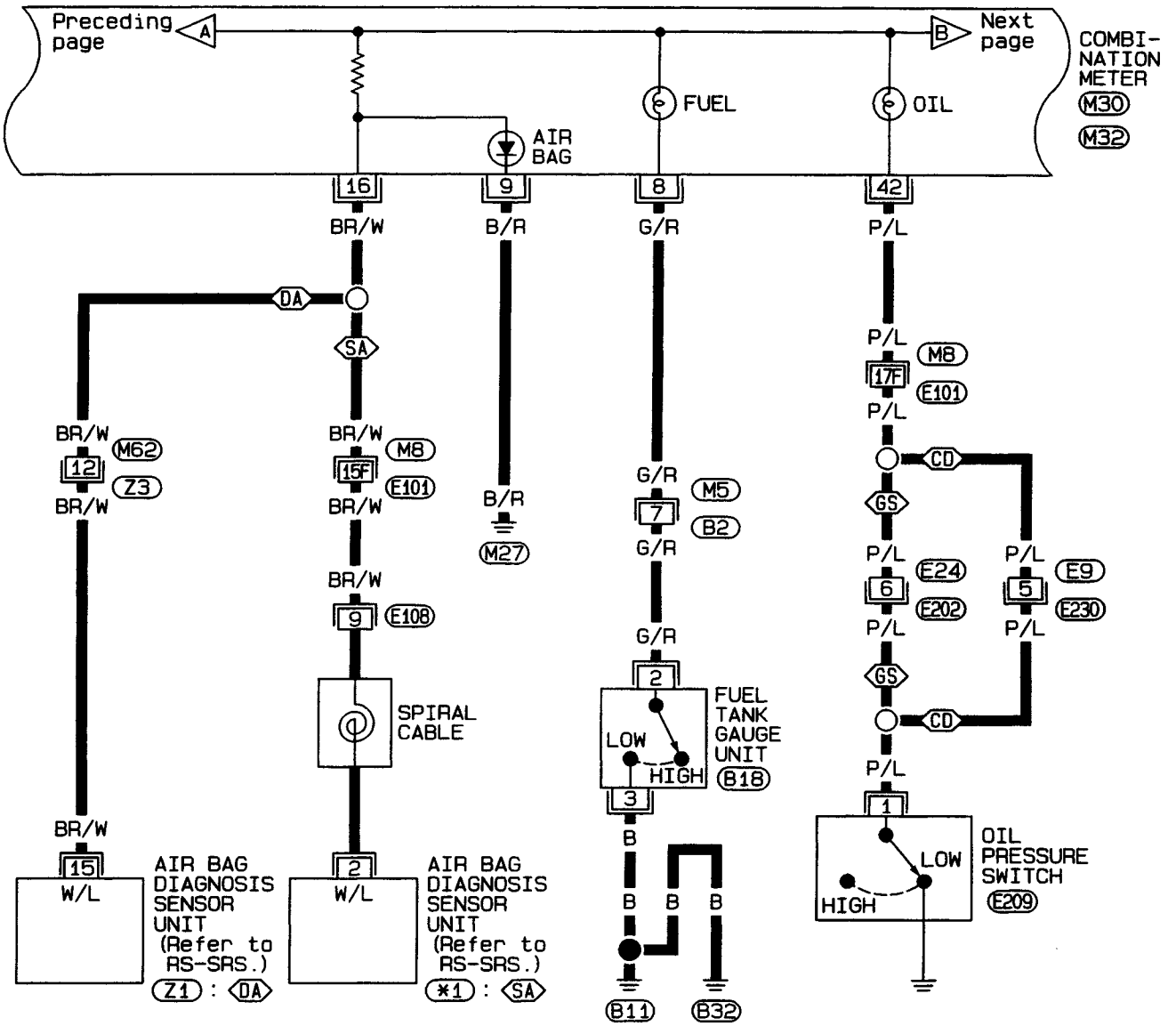

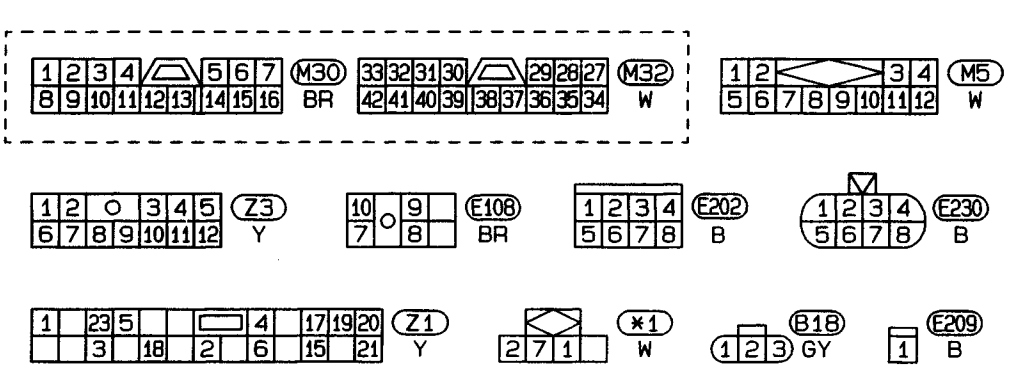

Refer to last page (Foldout page).
M8 , E101

HEL072

Simpo PDF Merge and Split Unregistered Version - http://www.simpopdf.com

Warning Lamps/Wiring Diagram — WARN — (Cont'd)

EL-WARN-03

GS : Gasoline engine
CD : Diesel engine

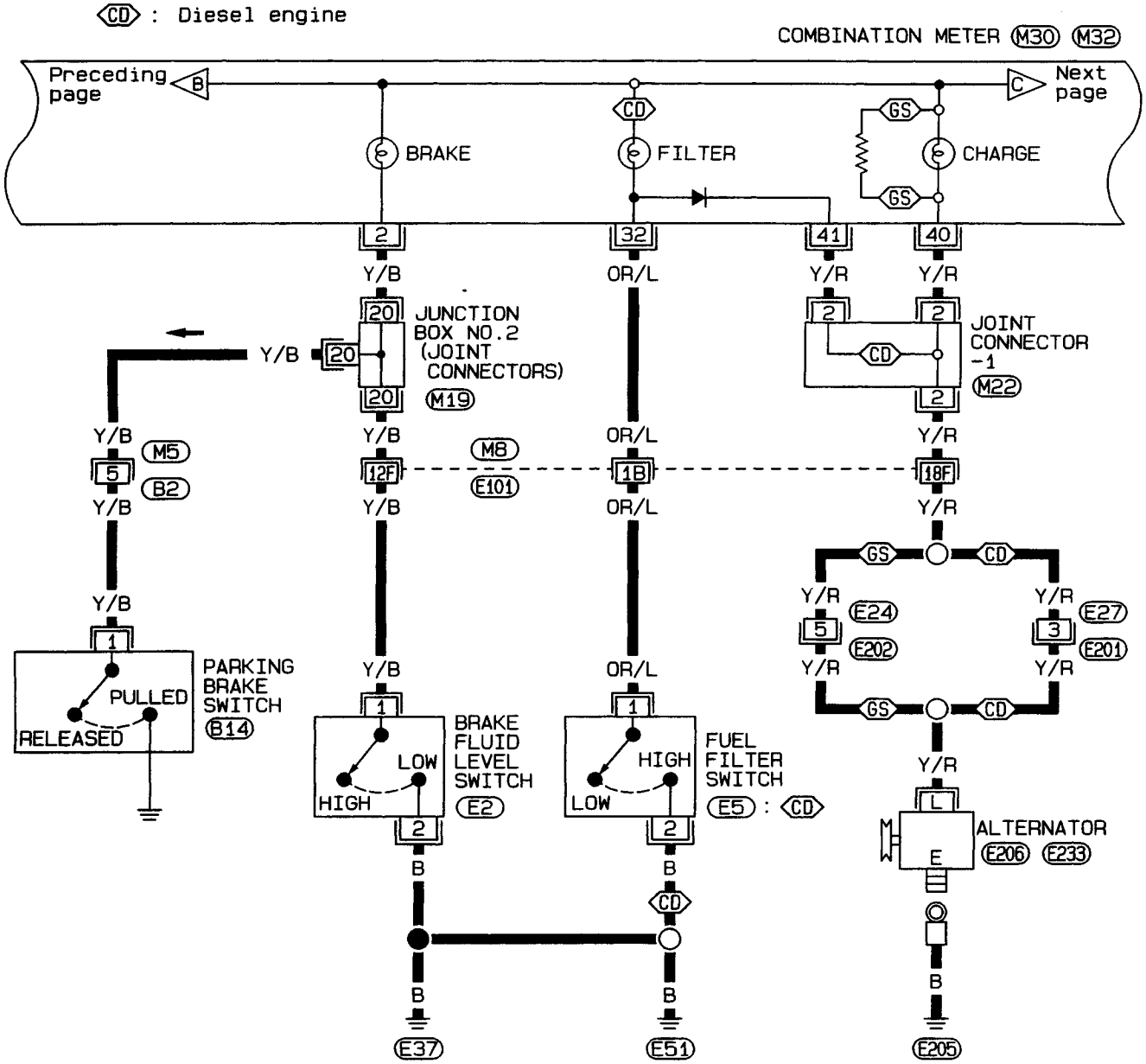

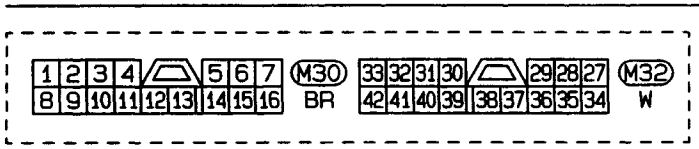

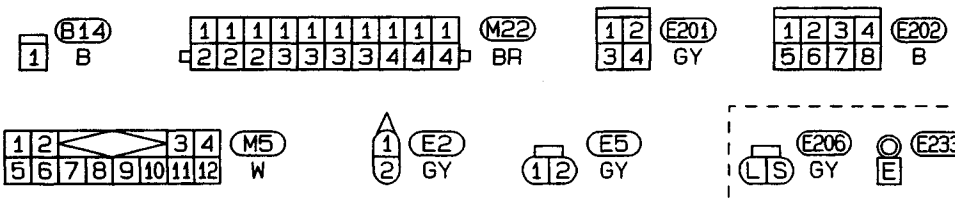

Refer to last page (Foldout page).
M8, E101
M19

EL

HEL073

Simpo PDF Merge and Split Unregistered Version - http://www.simpopdf.com

Warning Lamps/Wiring Diagram — WARN — (Cont'd)

EL-WARN-04

HS : 5-door Hatchback and Sedan models

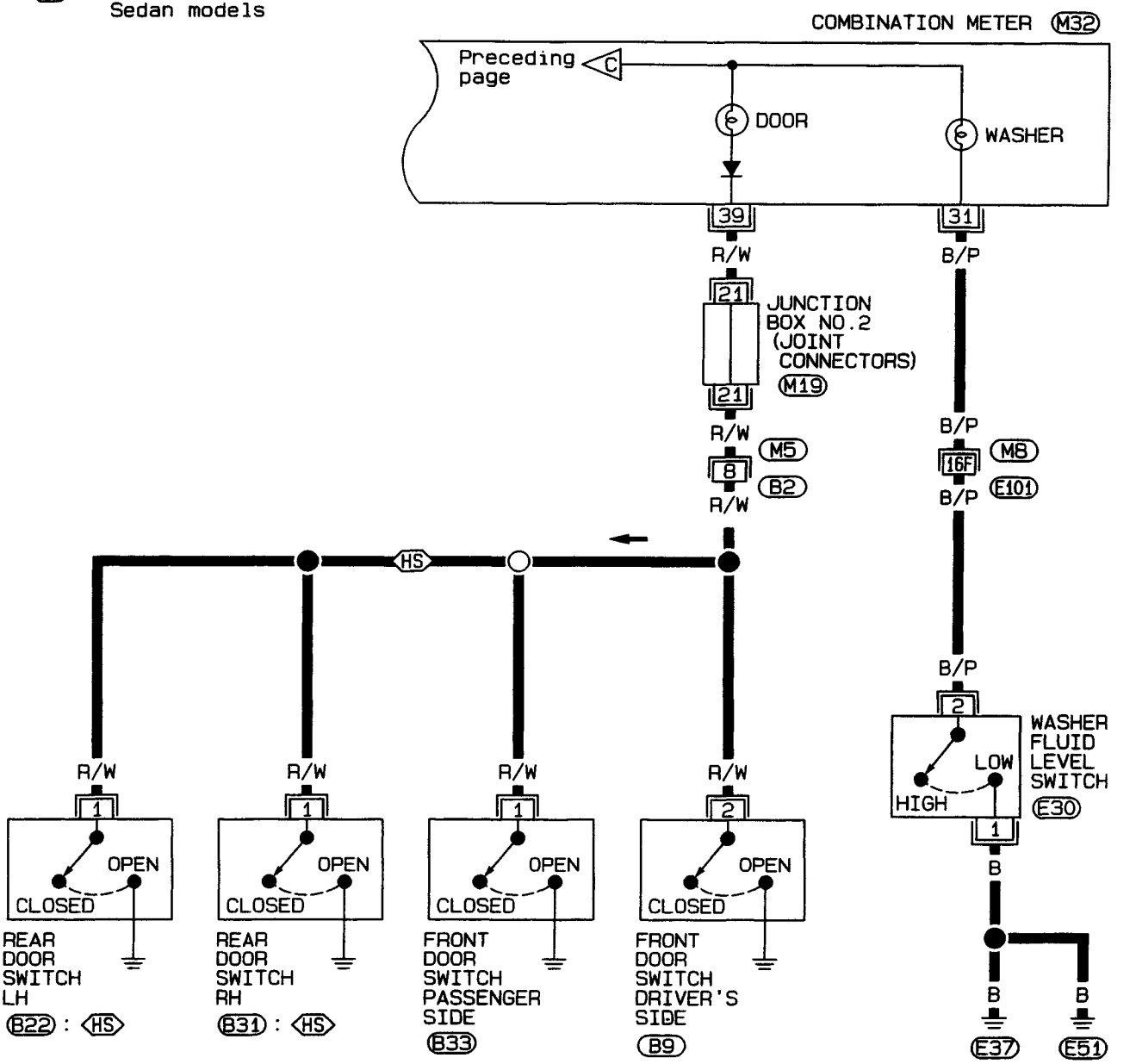

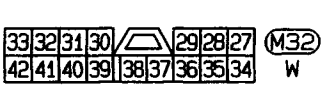

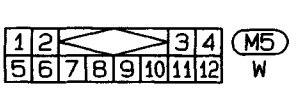

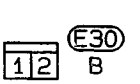

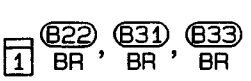

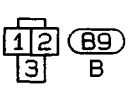

Refer to last page (Foldout page).
M8, E101
M19

HEL074

Simpo PDF Merge and Split Unregistered Version - http://www.simpopdf.com

Warning Lamps/Wiring Diagram — WARN — (Cont'd)

RHD MODELS WITH TACHOMETER

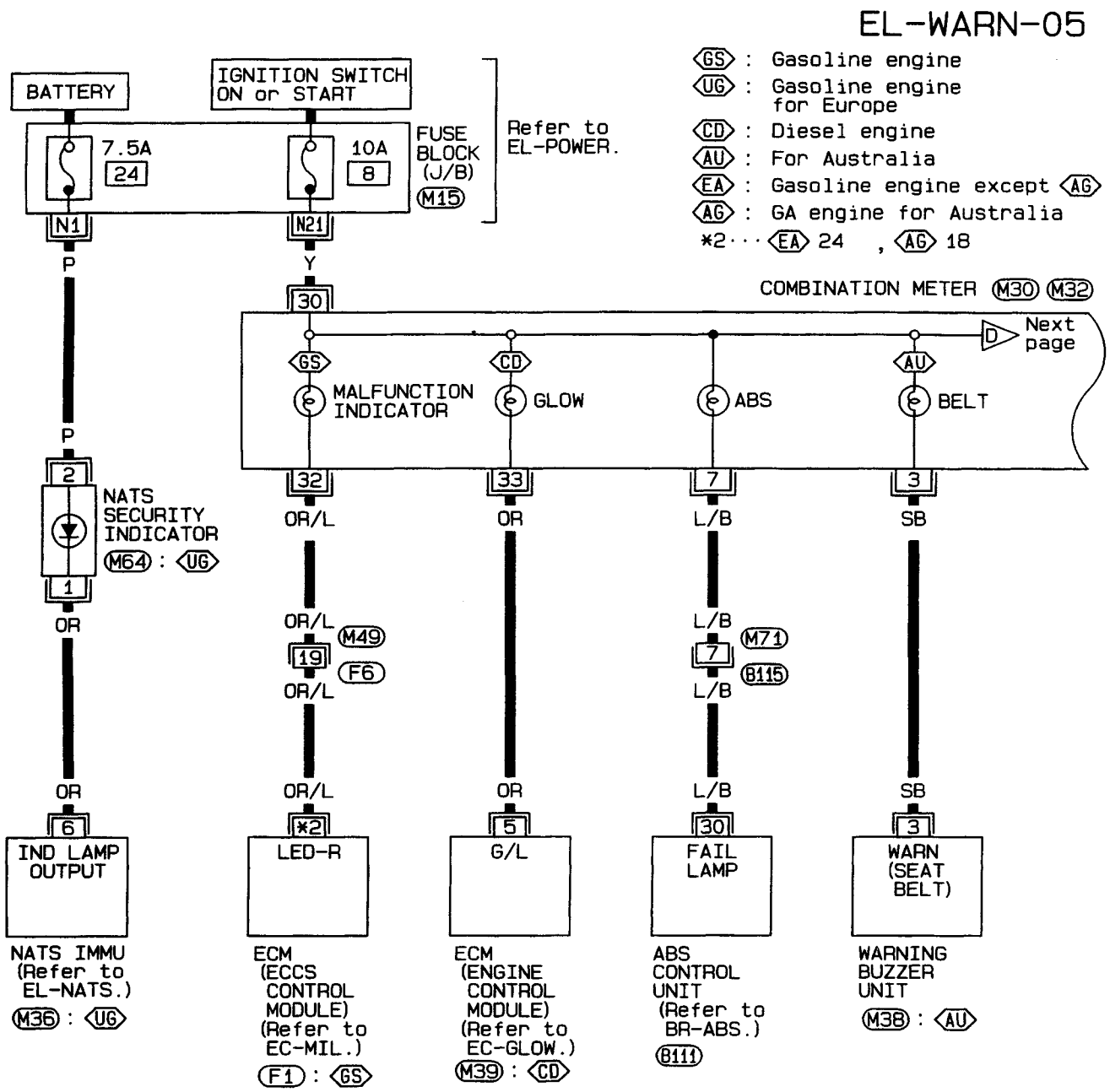

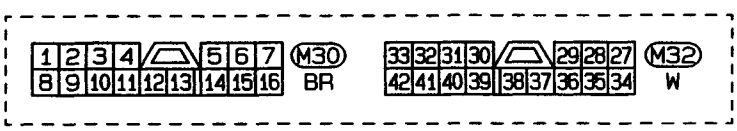

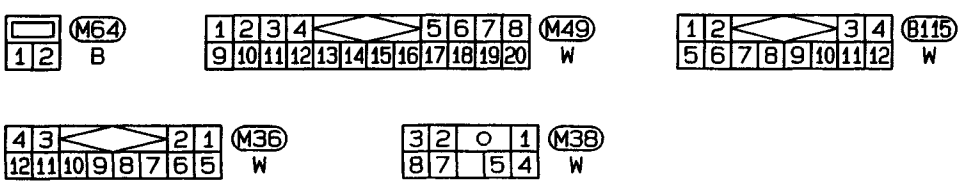

Refer to last page (Foldout page).

M15

F1

M39

B111

EL

HEL075

Simpo PDF Merge and Split Unregistered Version - http://www.simpopdf.com

Warning Lamps/Wiring Diagram — WARN — (Cont'd)

EL-WARN-06

DA : Models with dual air bag system
SA : Models with single air bag system

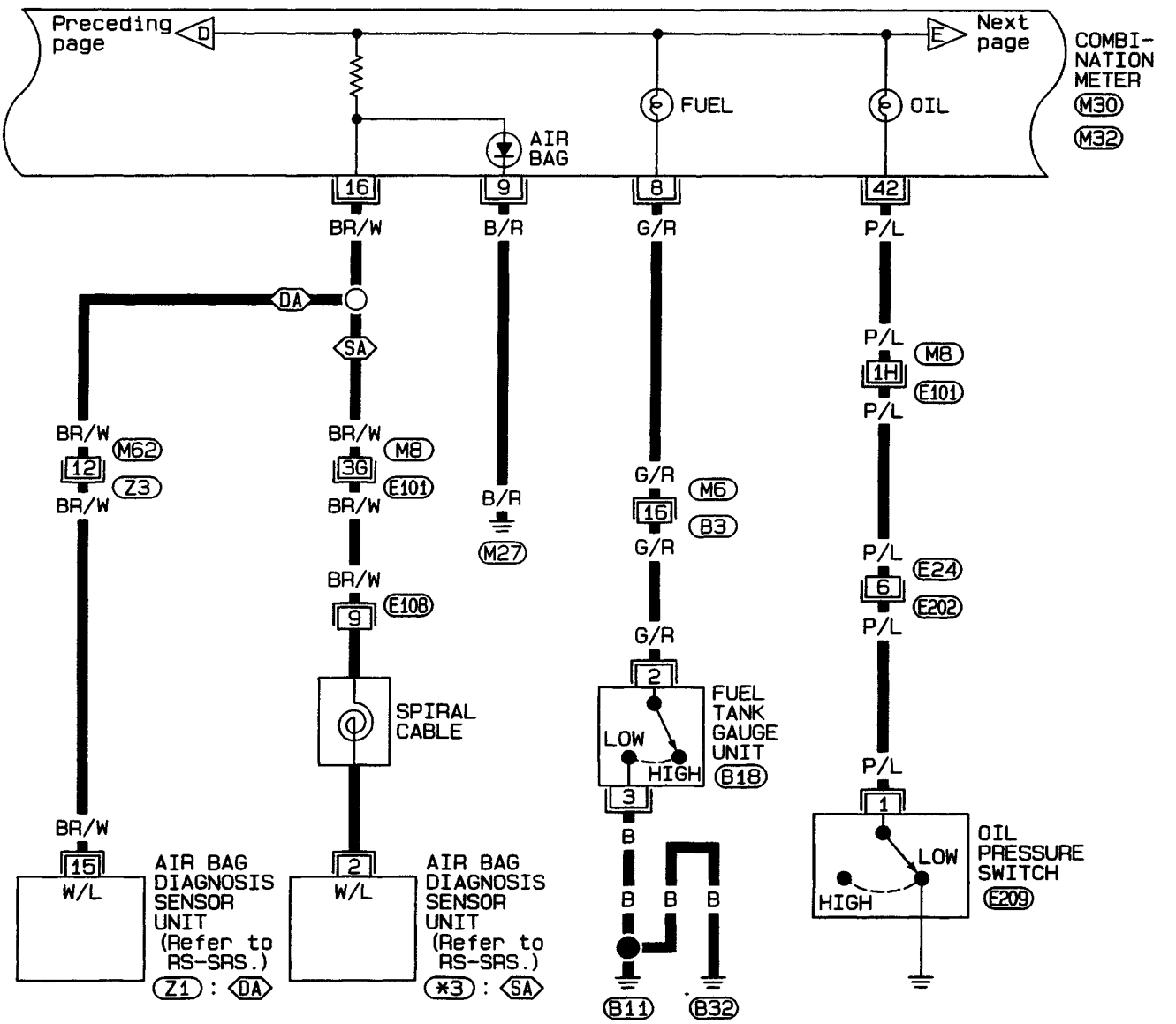

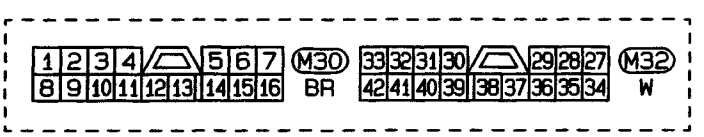

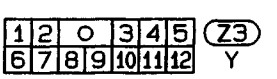

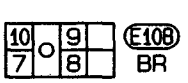

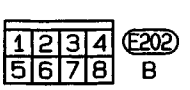

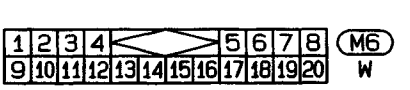

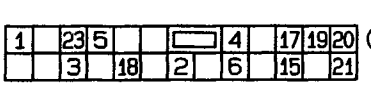

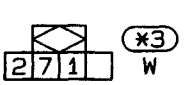

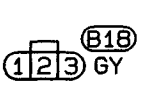

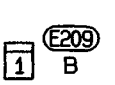

Refer to last page (Foldout page).

M8 , E101

HEL076

Simpo PDF Merge and Split Unregistered Version - http://www.simpopdf.com

Warning Lamps/Wiring Diagram — WARN — (Cont'd)

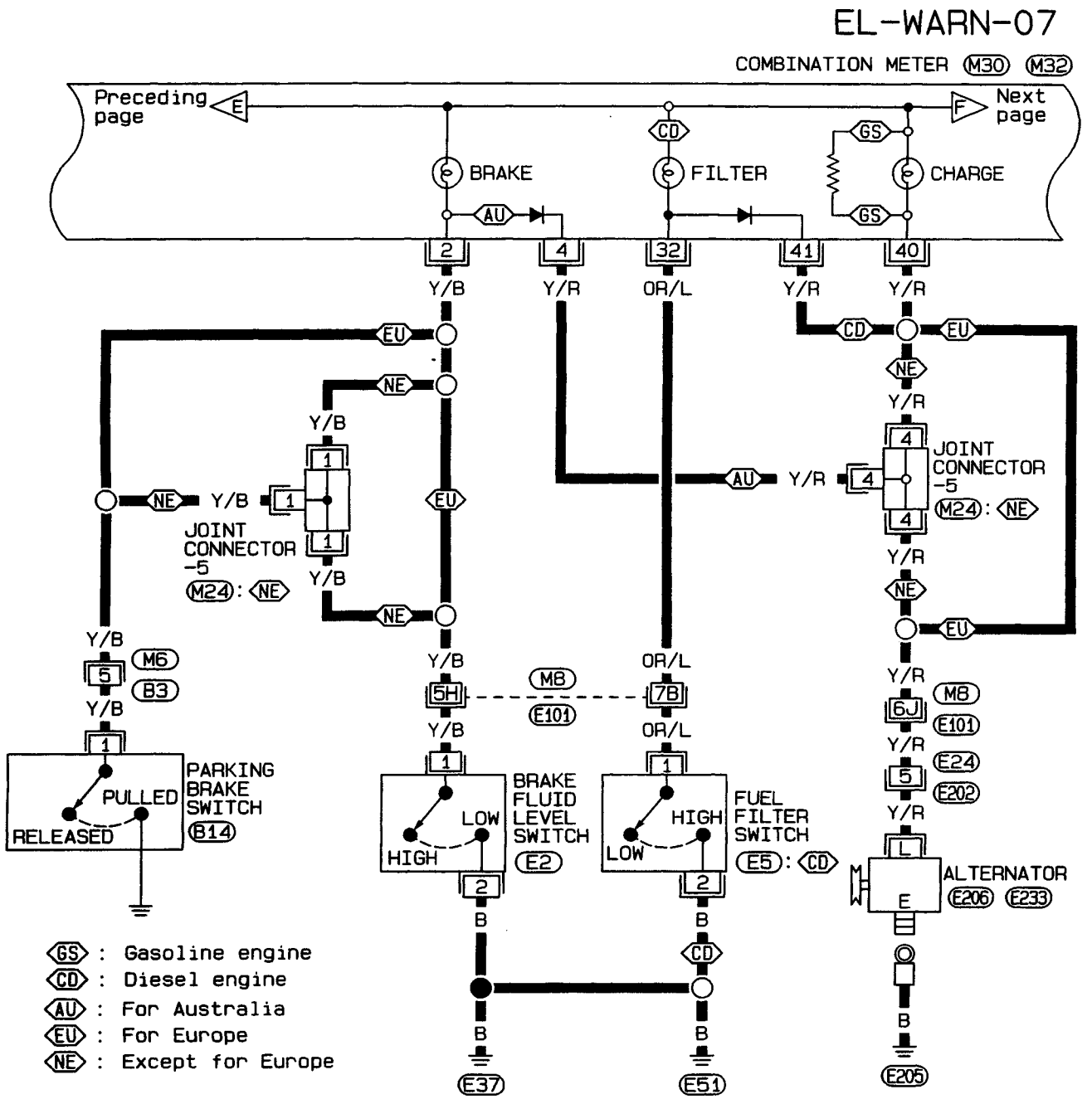

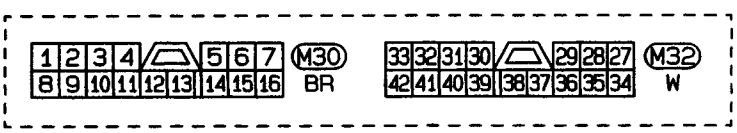

Refer to last page (Foldout page).

M8 , E101

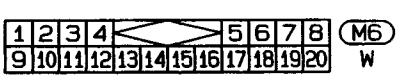

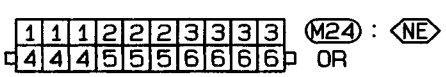

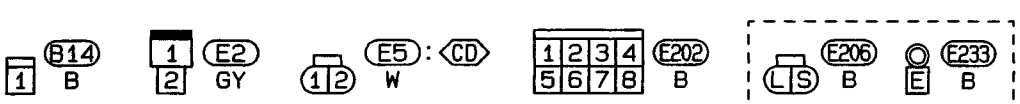

HEL077

Simpo PDF Merge and Split Unregistered Version - http://www.simpopdf.com

Warning Lamps/Wiring Diagram — WARN — (Cont'd)

EL-WARN-08

HS : 5-door Hatchback and Sedan models
AE : Except for Australia

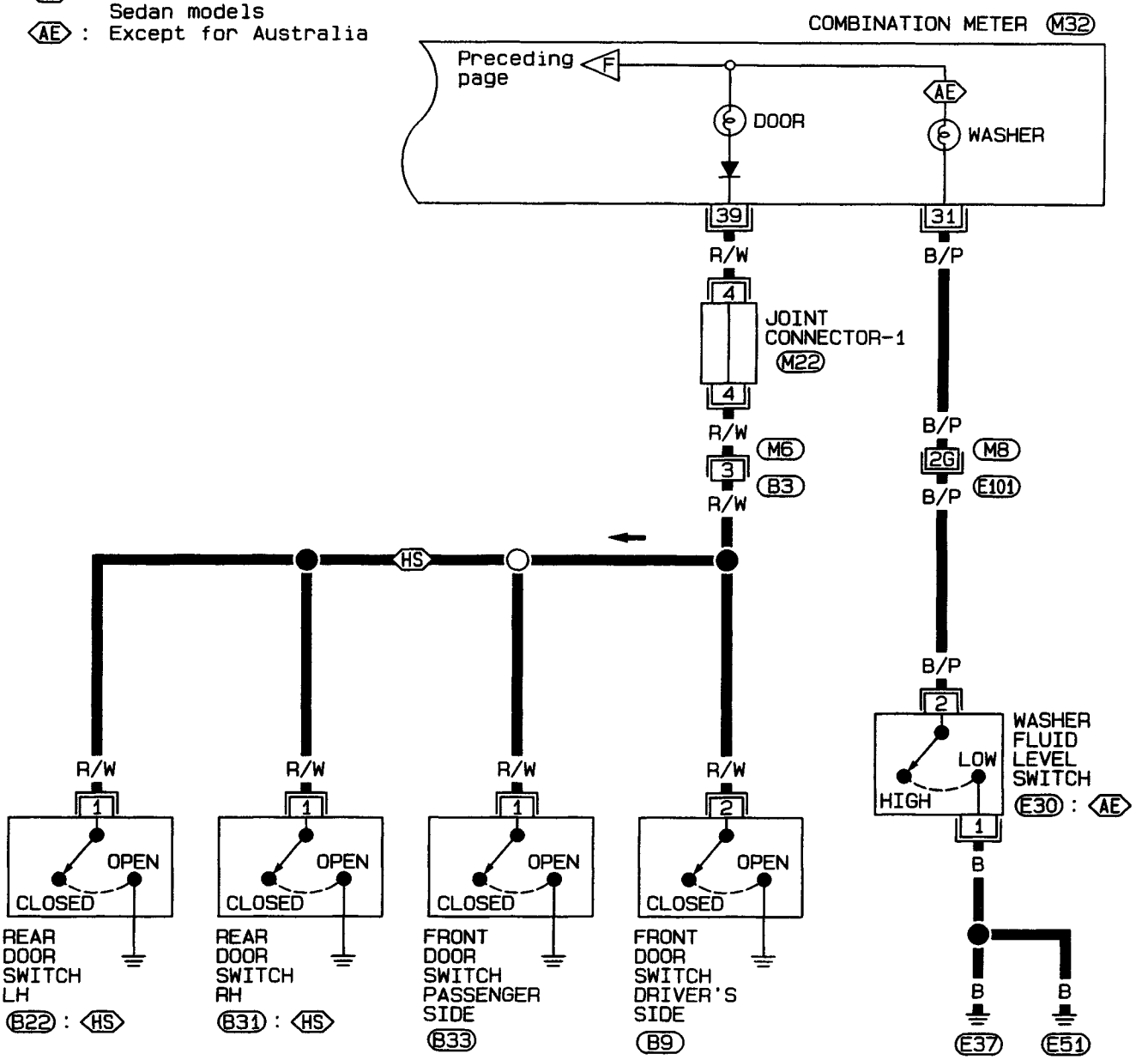

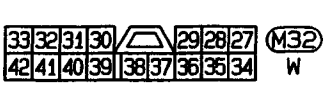

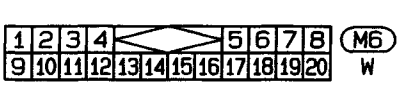

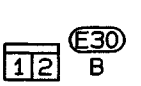

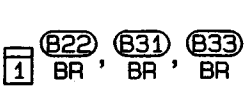

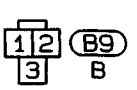

Refer to last page (Foldout page).
M8 , E101

HEL078

Simpo PDF Merge and Split Unregistered Version - http://www.simpopdf.com

Warning Lamps/Wiring Diagram — WARN — (Cont'd)

WITHOUT TACHOMETER

EL-WARN-09

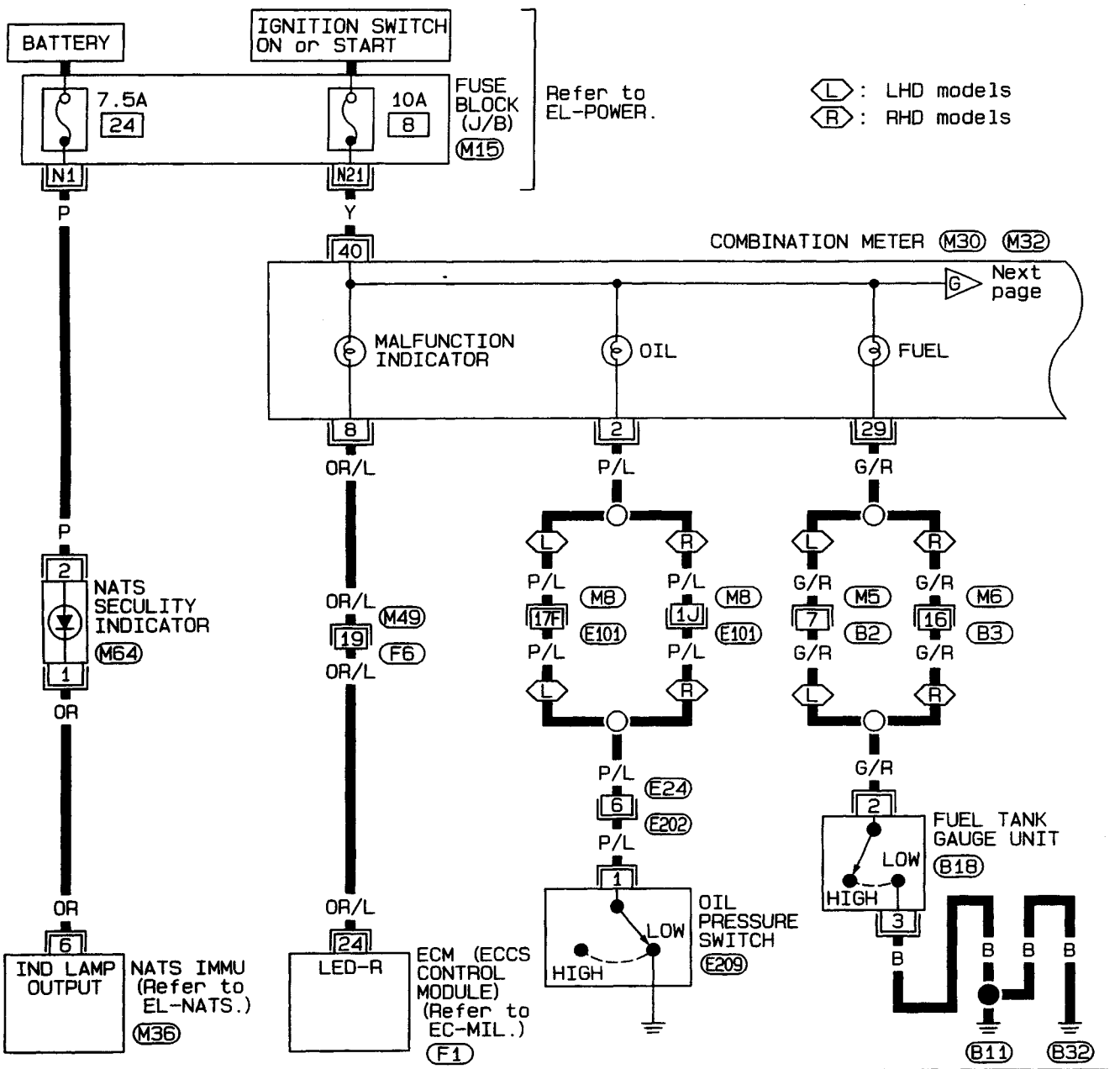

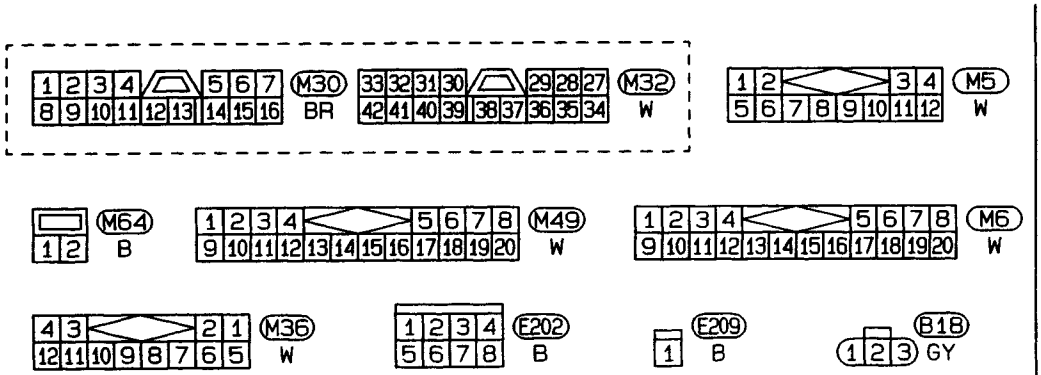

Refer to last page (Foldout page).

M8 , E101

F1

EL

HEL079

Simpo PDF Merge and Split Unregistered Version - http://www.simpopdf.com

Warning Lamps/Wiring Diagram — WARN — (Cont'd)

EL-WARN-10

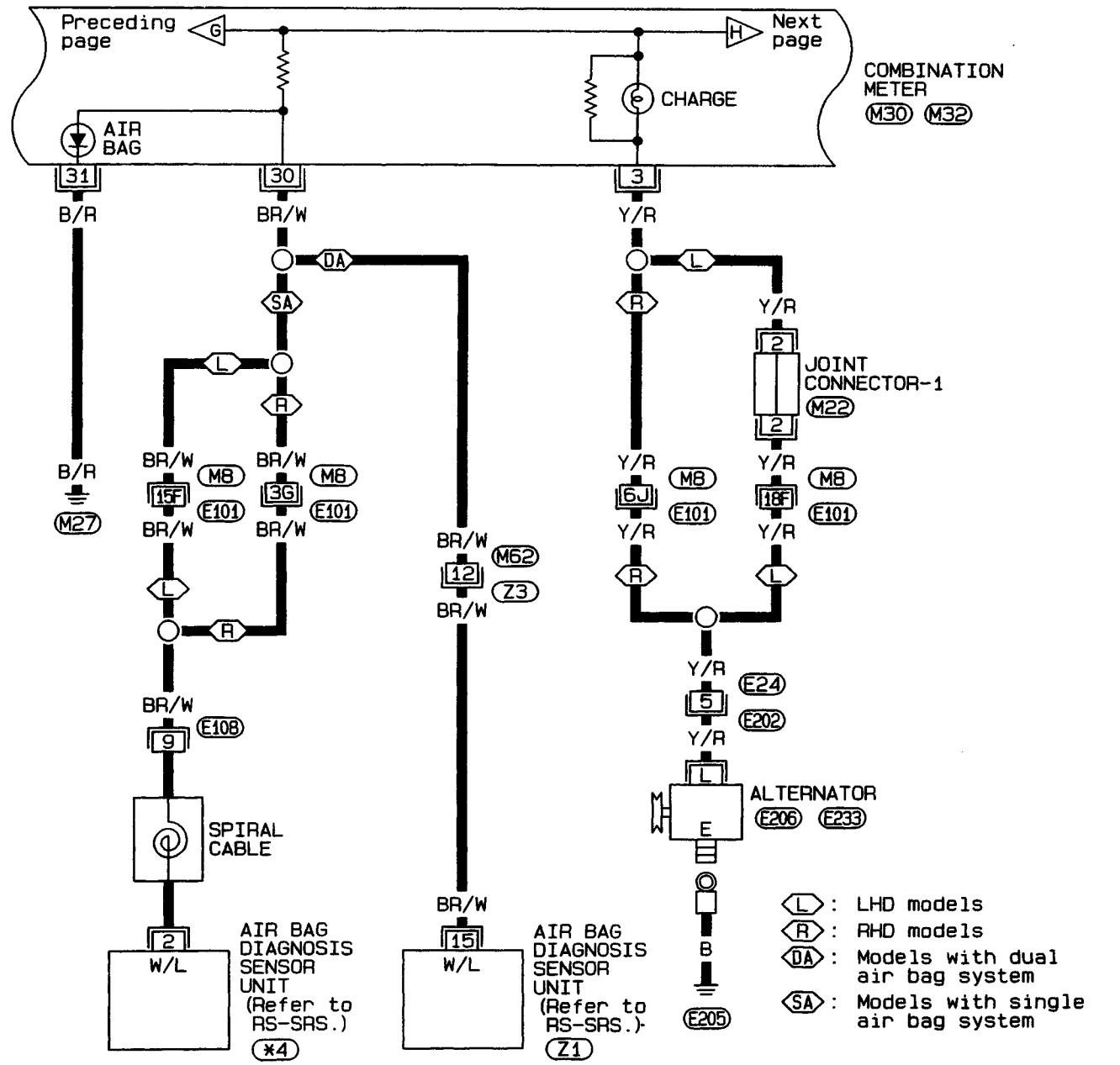

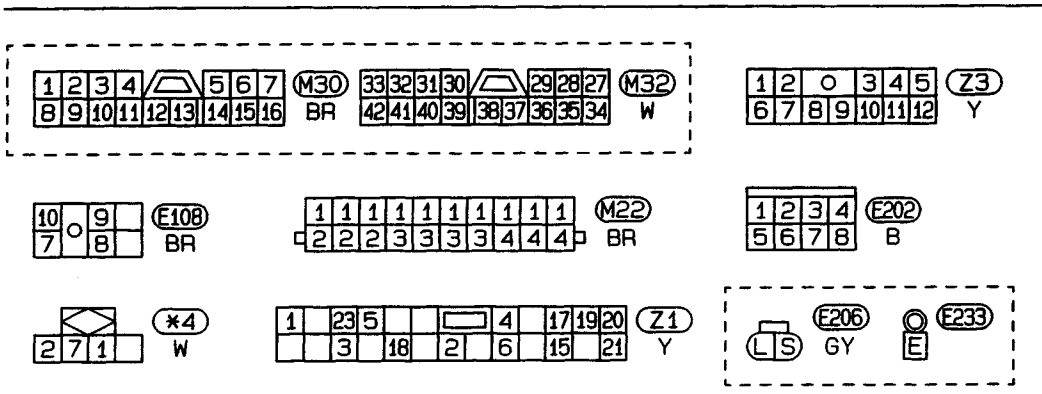

Refer to last page (Foldout page).

M8 , E101

Simpo PDF Merge and Split Unregistered Version - http://www.simpopdf.com

Warning Lamps/Wiring Diagram — WARN — (Cont'd)

EL-WARN-11

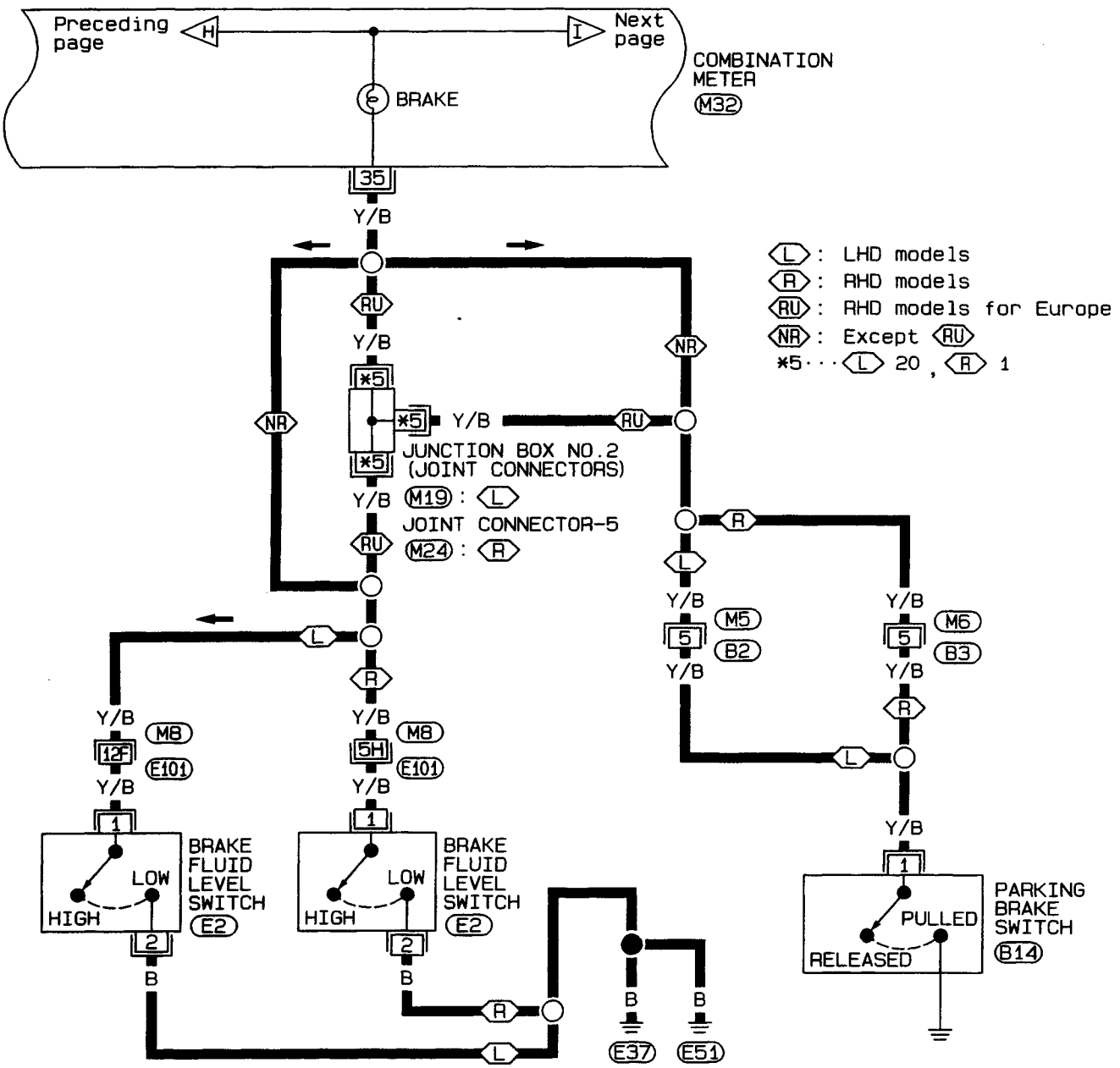

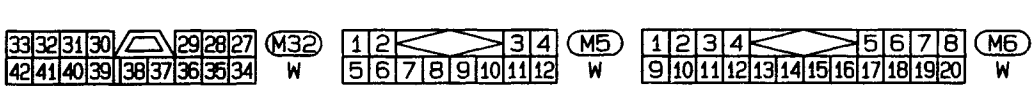

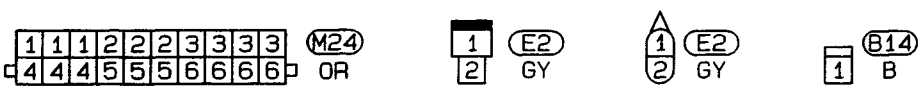

Refer to last page (Foldout page).

M8 , E101

M19

EL

HEL081

Simpo PDF Merge and Split Unregistered Version - http://www.simpopdf.com

Warning Lamps/Wiring Diagram — WARN — (Cont'd)

EL-WARN-12

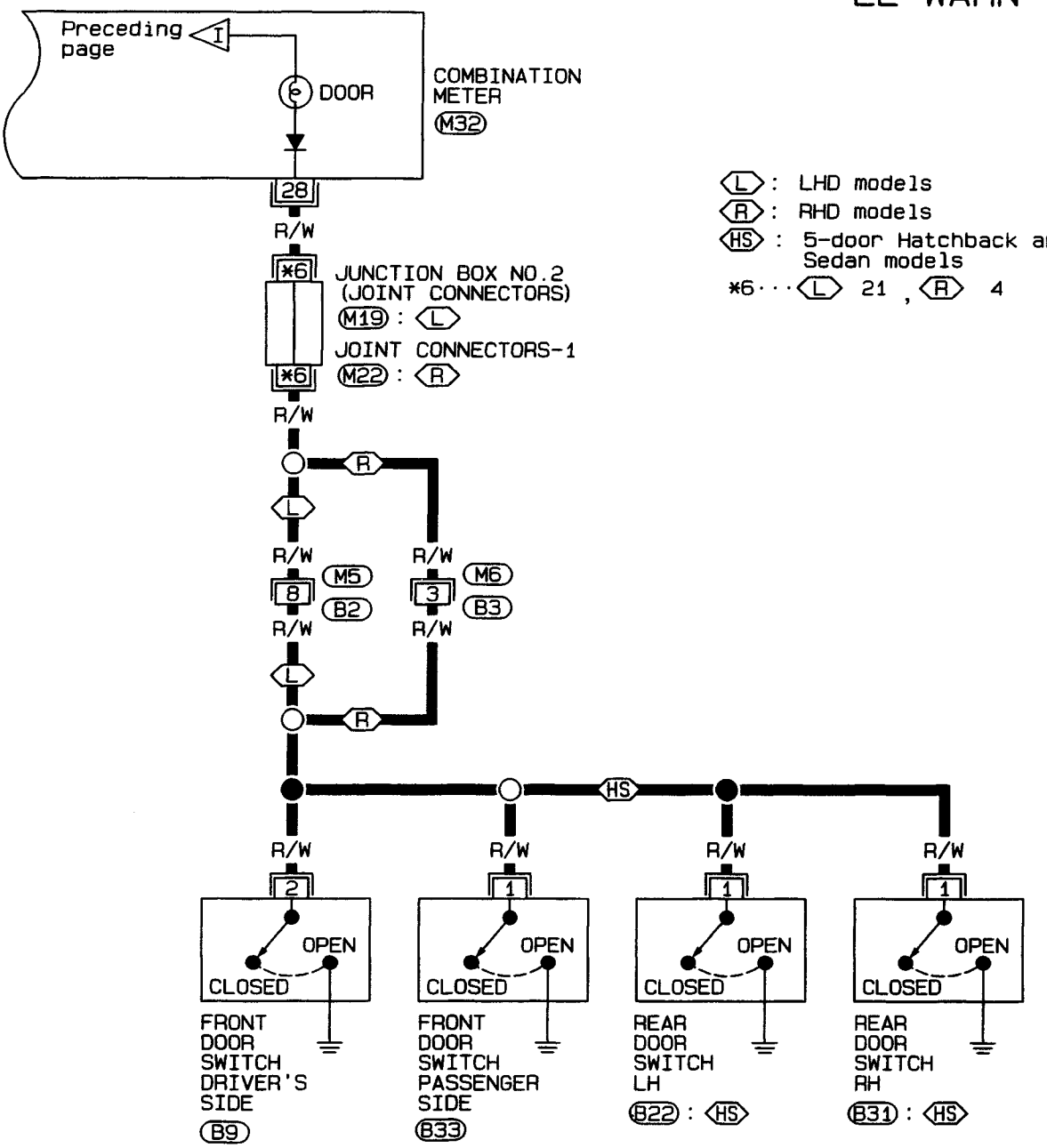



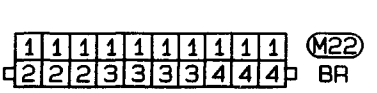

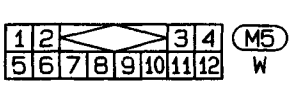

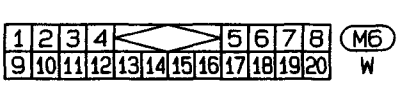

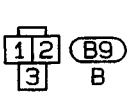

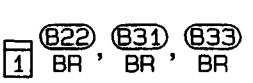

Refer to last page (Foldout page).

M19

HEL198

Simpo PDF Merge and Split Unregistered Version - http://www.simpopdf.com

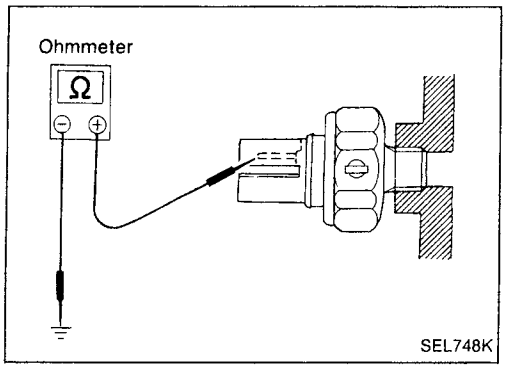

Oil Pressure Switch Check

	Oil pressure kPa (bar, kg/cm^2, psi)	Continuity
Engine start	More than 10 - 20 (0.10 - 0.20, 0.1 - 0.2, 1.4 - 2.8)	NO
Engine stop	Less than 10 - 20 (0.10 - 0.20, 0.1 - 0.2, 1.4 - 2.8)	YES

Check the continuity between the terminals of oil pressure switch and body ground.

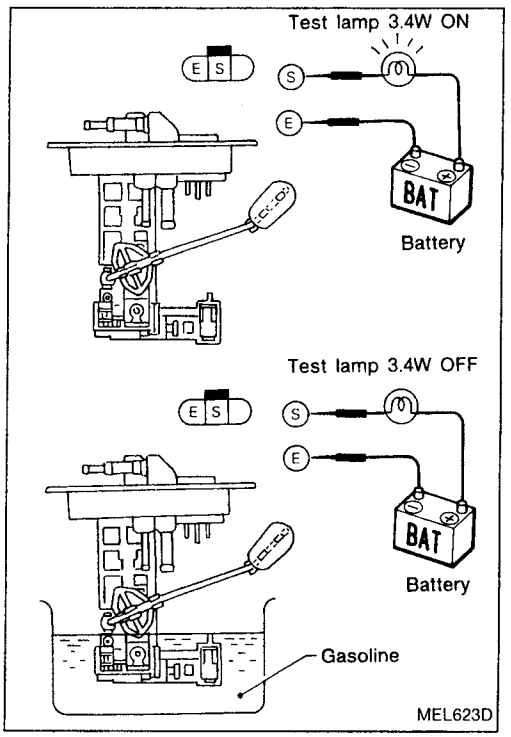

Fuel Warning Lamp Sensor Check

- It will take a short time for the bulb to light.

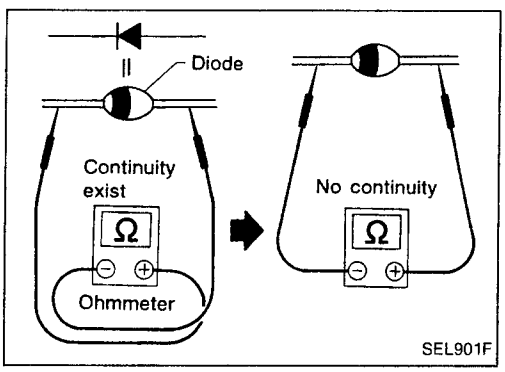

Diode Check

- Check continuity using an ohmmeter.
- Diode is functioning properly if test results are as shown in the figure at left.

NOTE:
Specification may vary depending on the type of tester. Before performing this inspection, be sure to refer to the instruction manual for the tester to be used.

- Diodes for warning lamps are built into the combination meter printed circuit.

Refer to "Combination Meter" (EL-127).

Warning Buzzer Unit

- Seat belt warning lamp is controlled by the warning buzzer unit.

Refer to "Warning Buzzer" (EL-152).

EL

Simpo PDF Merge and Split Unregistered Version - http://www.simpopdf.com

Warning Buzzer/System Description

The warning buzzer is controlled by the warning buzzer unit.
Power is supplied at all times
(RHD models except for Europe)
- through 7.5A fuse (No. 24 , located in the fuse block)
- to key switch terminal ①.

Power is supplied at all times
(LHD models without daytime light system)
- through 75A fusible link (letter g , located in the fusible link and fuse box).
- to lighting switch terminal ⑪.

(LHD models with daytime light system and RHD models)
- through 10A fuse (No. 36 , located in the fuse block)
- to lighting switch terminal ⑪.

Power is supplied at all times
(Except for Australia)
- through 7.5A fuse (No. 43 , located in the fusible link and fuse box)
- to rear fog lamp switch terminal ①.

With the ignition switch in the ON or START position, power is supplied
- through 7.5A fuse (No. 7 , located in the fuse block)
- to warning buzzer unit terminal ⑪ (LHD models except for Australia) or ① (For Australia).

When driver's door is opened, ground is supplied
- through body grounds B11 and B32
- to driver's side door switch terminal ③
- through driver's side door switch terminal ①
- to warning buzzer unit terminal ④ (Except for Australia) or ⑦ (For Australia).

With power and ground supplied, the warning buzzer will sound.

Ignition key warning buzzer (RHD models except for Europe)

With the key in the ignition switch in the OFF position, and the driver's door open, the warning buzzer will sound. A battery positive voltage is supplied
- from key switch terminal ②
- to warning buzzer unit terminal ⑨ (Except for Australia) or ⑤ (For Australia).

Ground is supplied
- from driver side door switch terminal ①
- to warning buzzer unit terminal ④ (Except for Australia) or ⑦ (For Australia).

Driver side door switch terminal ③ is grounded through body grounds B11 and B32.

Light warning buzzer

With ignition switch OFF, driver's door open, and lighting switch in 1ST or 2ND position, warning buzzer will sound. A battery positive voltage is supplied
(LHD models without daytime light system)
- from lighting switch terminal ⑫
- through 10A fuse (No. 45 , located in the fusible link and fuse box)
- to warning buzzer unit terminal ⑩.

(LHD models with daytime light system)
- from lighting switch terminal ⑫
- to daytime light unit terminal ⑪
- through daytime light unit terminal ⑩
- to warning buzzer unit terminal ⑩

(RHD models)
- from lighting switch terminal ⑫
- to warning buzzer unit terminal ⑩ (Except for Australia) or ④ (For Australia).

Ground is supplied
- from driver side door switch terminal ①
- to warning buzzer unit terminal ④ (Except for Australia) or ⑦ (For Australia).

Driver side door switch terminal ③ is grounded through body grounds B11 and B32.

Rear fog lamp switch warning buzzer (For Europe models)

With ignition switch OFF, driver's door open, and rear fog lamp switch ON, warning buzzer will sound. A battery positive voltage is supplied

Simpo PDF Merge and Split Unregistered Version - http://www.simpopdf.com

Warning Buzzer/System Description (Cont'd)

- from rear fog lamp switch terminal ②
- to warning buzzer unit terminal ⑨.

Ground is supplied

- from driver side door switch terminal ①
- to warning buzzer unit terminal ④.

Driver side door switch terminal ③ is grounded through body grounds (B11) and (B32).

Simpo PDF Merge and Split Unregistered Version - http://www.simpopdf.com

Warning Buzzer/Wiring Diagram — BUZZER —

LHD MODELS

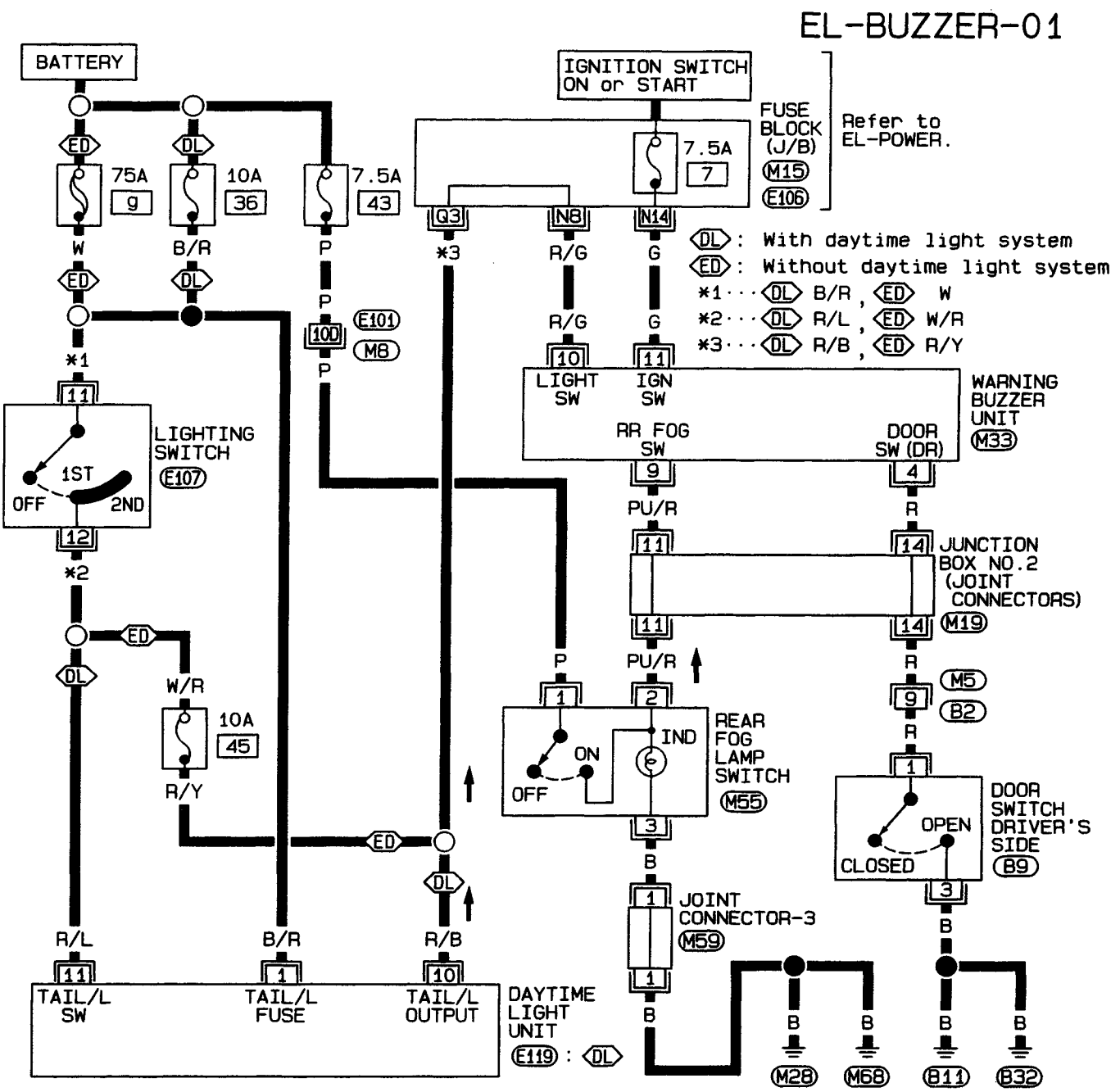

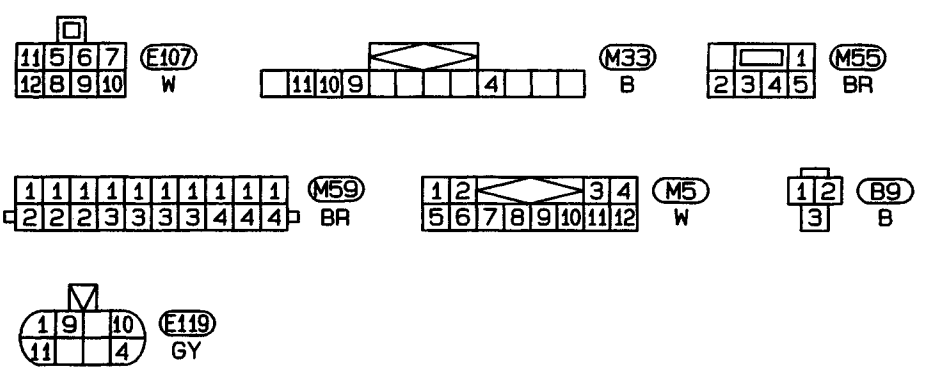

Refer to last page (Foldout page).
M8 , E101
M15 , E106
M19

HEL083

Simpo PDF Merge and Split Unregistered Version - http://www.simpopdf.com

Warning Buzzer/Wiring Diagram — BUZZER — (Cont'd)

RHD MODELS EXCEPT FOR AUSTRALIA

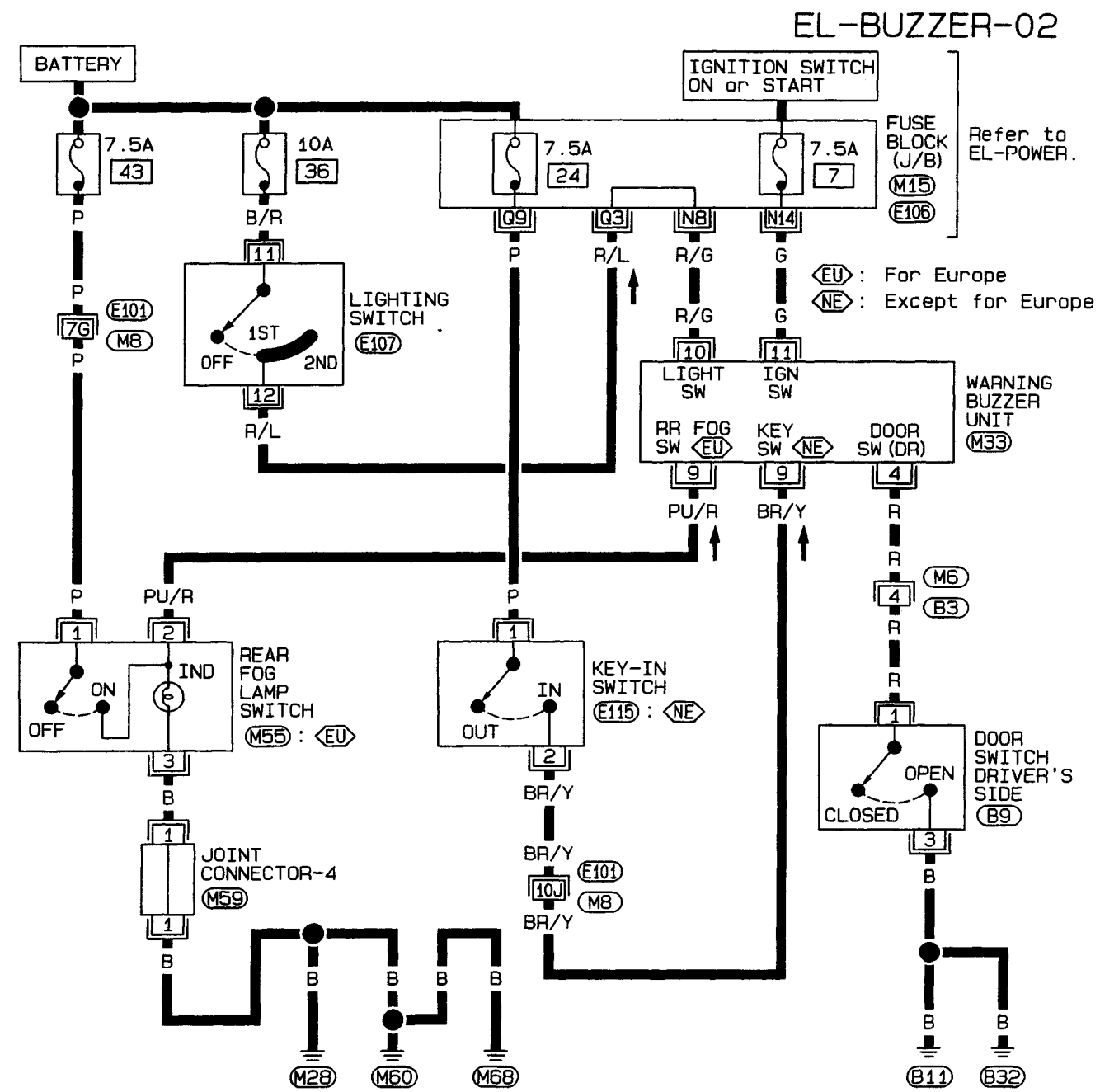

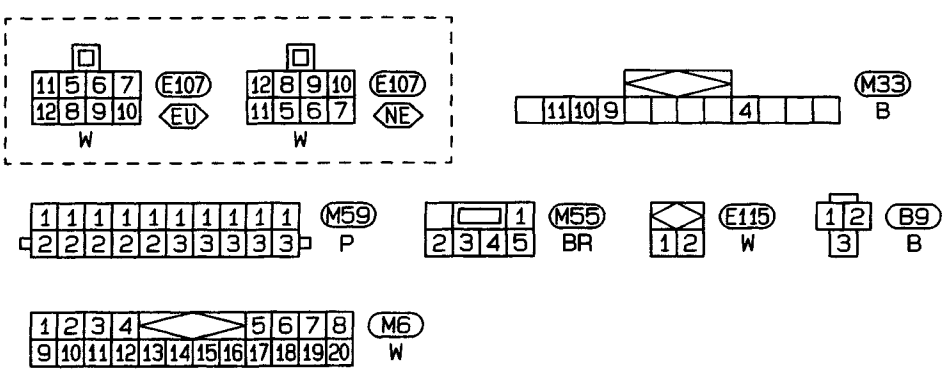

Refer to last page (Foldout page).

M8, E101

M15, E106

EL

HEL084

Simpo PDF Merge and Split Unregistered Version - http://www.simpopdf.com

Warning Buzzer/Wiring Diagram — BUZZER — (Cont'd)

FOR AUSTRALIA

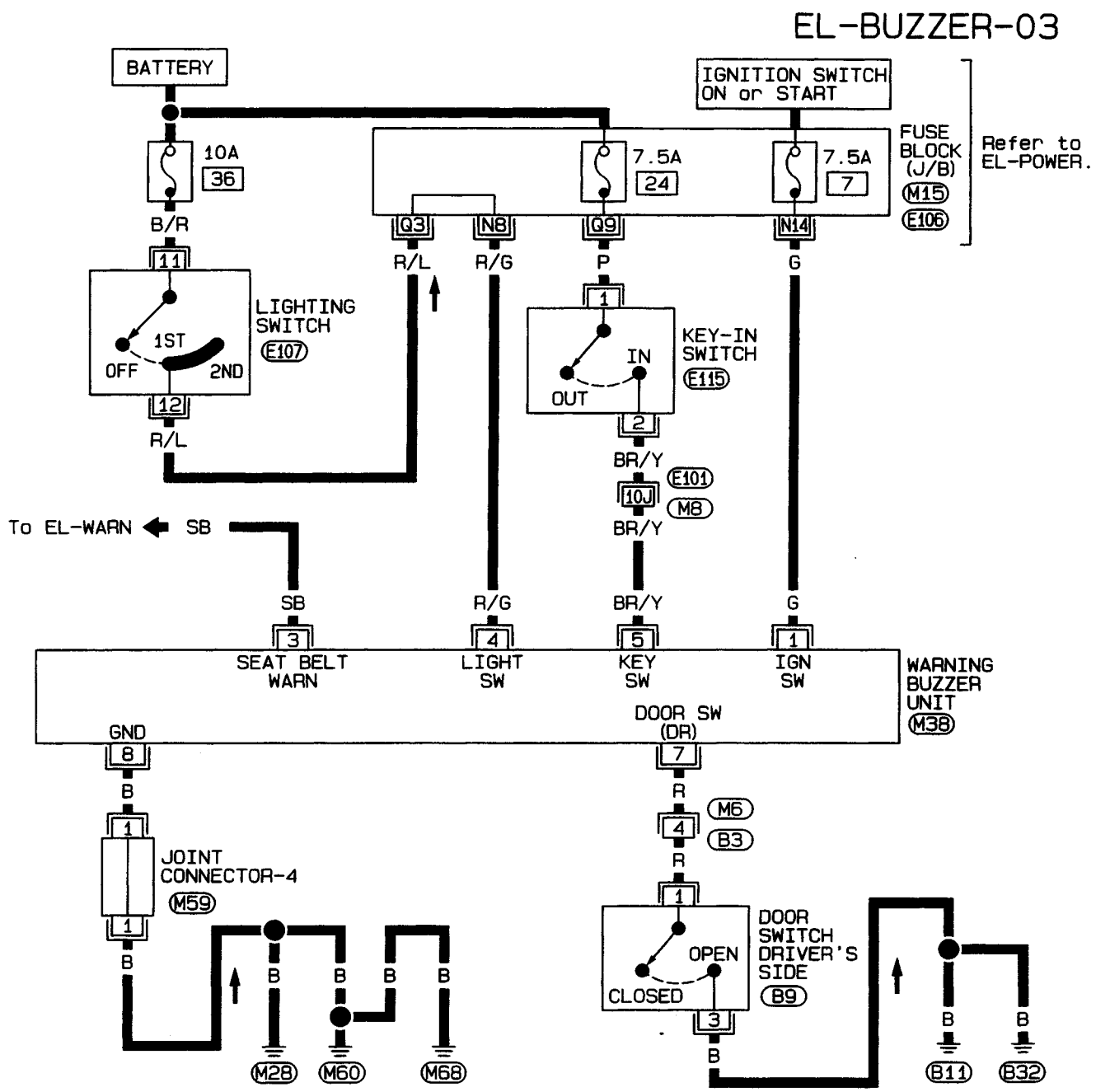

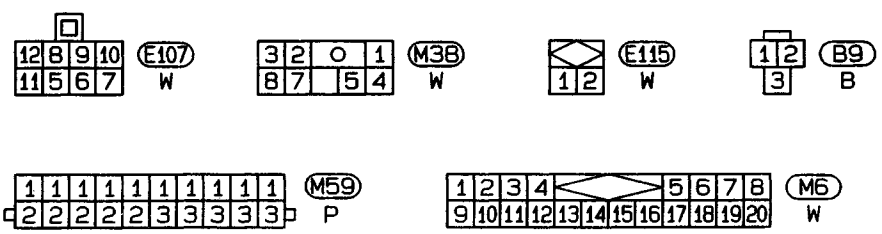

Refer to last page (Foldout page).
M8, E101
M15, E106

HEL085

Simpo PDF Merge and Split Unregistered Version - http://www.simpopdf.com

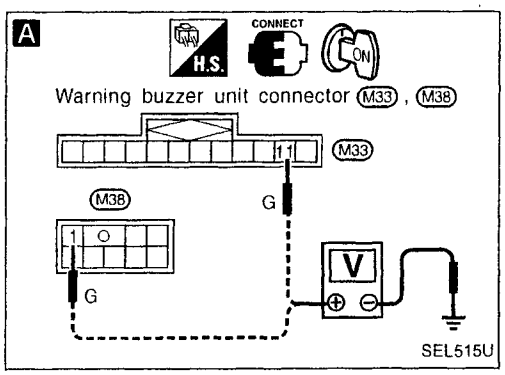

Components Inspection — Warning Buzzer

IGNITION POWER SUPPLY CHECK

A

IGNITION POWER SUPPLY CHECK
1) Turn ignition switch to "ON".
2) Measure voltage between warning buzzer unit connector and body ground.

Destination	Connector No.	Terminal No.
For Australia	M38	①
Except for Australia	M33	⑪

Battery voltage should exist.

NG → Check the following.
1) 7.5A fuse (No. 7, located in fuse block [J/B])
2) Harness

OK ↓

Ignition power supply is OK.

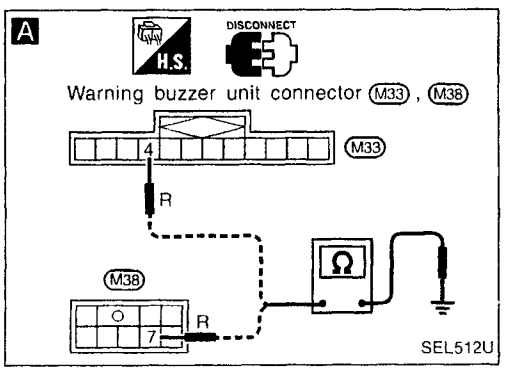

DRIVER'S DOOR SWITCH CHECK

A

DOOR SWITCH INPUT SIGNAL CHECK
Check continuity between warning buzzer unit connector and body ground.

Destination	Connector No.	Terminal No.	Door switch condition and continuity	
			Open	Close
For Australia	M38	⑦	Yes	No
Except for Australia	M33	④		

NG → Check the following.
1) Driver's door switch
2) Driver's door switch ground circuit
3) Harness (continuity and ground short)

OK ↓

Driver's door switch is OK.

EL

Simpo PDF Merge and Split Unregistered Version - http://www.simpopdf.com

Components Inspection — Warning Buzzer (Cont'd)

LIGHTING SWITCH CHECK

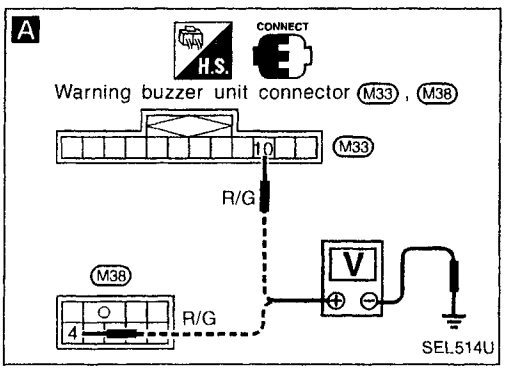

A

LIGHTING SWITCH INPUT SIGNAL CHECK
Measure voltage between warning buzzer unit connector and body ground.

Destination	Connector No.	Terminal No.	Lighting switch condition and voltage [V]	
			1st or 2nd	OFF
For Australia	M38	④	Approx. 12	0
Except for Australia	M33	⑩		

NG → Check the following.
1) 10A fuse (No. 36), and 75A fuse (No. 9)
2) Lighting switch
3) Harness

OK ↓

Lighting switch is OK.

IGNITION KEY-IN SWITCH SIGNAL CHECK — RHD models except for Europe

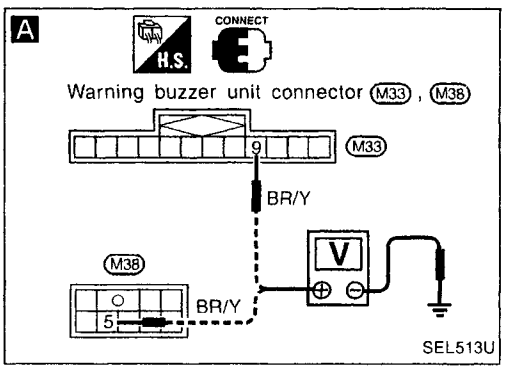

A

KEY-IN SWITCH INPUT SIGNAL CHECK
Measure voltage between warning buzzer unit connector and body ground.

Destination	Connector No.	Terminal No.	Ignition key condition and voltage [V]	
			Inserted	Removed
For Australia	M38	⑤	Approx. 12	0
RHD models except for Australia	M33	⑨		

NG → Check the following.
1) 7.5A fuse (No. 24 , located in fuse block [J/B])
2) Ignition key switch
3) Harness

OK ↓

Ignition key switch is OK.

Simpo PDF Merge and Split Unregistered Version - http://www.simpopdf.com

Components Inspection — Warning Buzzer (Cont'd)

REAR FOG LAMP SWITCH CHECK — For Europe models

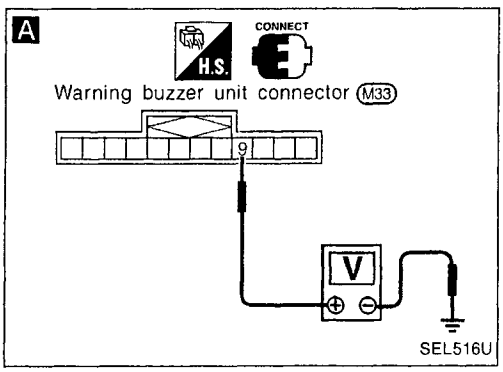

A

REAR FOG LAMP SWITCH INPUT SIGNAL CHECK
Measure voltage between warning buzzer unit connector terminal ⑨ and body ground.

Condition	Voltage [V]
Rear fog lamp switch ON	Approx. 12
Rear fog lamp switch OFF	0

NG → Check the following.
1) 7.5A fuse (No. 43)
2) Rear fog lamp switch
3) Harness

OK ↓

Rear fog lamp switch is OK.

EL

Simpo PDF Merge and Split Unregistered Version - http://www.simpopdf.com

Front Wiper and Washer/System Description

WIPER OPERATION

The wiper switch is controlled by a lever built into the combination switch.
There are three wiper switch positions:

- LO speed
- HI speed
- INT (Intermittent)

With the ignition switch in the ACC or ON position, power is supplied

- through 20A fuse (No. 19 , located in the fuse block)
- to wiper motor terminal ⑥.

Low and high speed wiper operation

Ground is supplied to wiper switch terminal ⑰ through body grounds E37 and E51.
When the wiper switch is placed in the LO position, ground is supplied

- through terminal ⑭ of the wiper switch
- to wiper motor terminal ②.

With power and ground supplied, the wiper motor operates at low speed.
When the wiper switch is placed in the HI position, ground is supplied

- through terminal ⑯ of the wiper switch
- to wiper motor terminal ①.

With power and ground supplied, the wiper motor operates at high speed.

Auto stop operation

With wiper switch turned OFF, wiper motor will continue to operate until wiper arms reach windshield base.
When wiper arms are not located at base of windshield with wiper switch OFF, ground is provided

- from terminal ⑭ of the wiper switch
- to wiper motor terminal ②, in order to continue wiper motor operation at low speed.

Ground is also supplied

- through terminal ⑬ of the wiper switch
- to wiper amplifier terminal ②
- through terminal ⑦ of the wiper amplifier
- to wiper motor terminal ⑤
- through terminal ④ of the wiper motor, and
- through body grounds M28, M60 and M68.

When wiper arms reach base of windshield, wiper motor terminals ⑤ and ⑥ are connected instead of terminals ⑤ and ④. Wiper motor will then stop wiper arms at the PARK position.

Intermittent operation

With variable intermittent

The wiper motor operates the wiper arms at a set interval of approximately 2 to 20 seconds. This feature is controlled by the wiper amplifier.
When the wiper switch is placed in the INT position, ground is supplied

- to wiper amplifier terminal ①
- from wiper switch terminal ⑮
- through body grounds E37 and E51.
- to wiper motor terminal ②
- through the wiper switch terminal ⑭
- to wiper switch terminal ⑬
- through wiper amplifier terminal ②
- to wiper amplifier terminal ③
- through body grounds M28, M60 and M68.

The desired interval time is input

- to wiper amplifier terminal ⑧
- from wiper switch terminal ⑲.

The wiper motor operates at low speed at the desired time interval.

Simpo PDF Merge and Split Unregistered Version - https://www.simpopdf.com

Front Wiper and Washer/System Description (Cont'd)

Without variable intermittent

The wiper motor operates the wiper arms at an interval of approximately 7 seconds. This feature is controlled by the wiper amplifier.

When the wiper switch is placed in the INT position, ground is supplied

- to wiper amplifier terminal ①
- from wiper switch terminal ⑮
- through body grounds E37 and E51
- to wiper motor terminal ②
- through the wiper switch terminal ⑭
- to wiper switch terminal ⑬
- through wiper amplifier terminal ②
- to wiper amplifier terminal ③
- through body grounds M28, M60 and M68.

WASHER OPERATION

With the ignition switch in the ACC or ON position, power is supplied

- through 20A fuse (No. 19 , located in the fuse block)
- to washer motor terminal ①.

When the lever is pulled to the WASH position, ground is supplied

- to washer motor terminal ②, and
- to wiper amplifier terminal ⑥
- from terminal ⑱ of the wiper switch
- through terminal ⑰ of the wiper switch, and
- through body grounds E37 and E51.

With power and ground supplied, the washer motor operates.

When the lever is pulled to the WASH position for one second or more, the wiper motor operates at low speed for approximately 3 seconds to clean windshield. This feature is controlled by the wiper amplifier in the same manner as the intermittent operation.

Simpo PDF Merge and Split Unregistered Version - http://www.simpopdf.com

Front Wiper and Washer/Wiring Diagram
— WIPER —

LHD MODELS

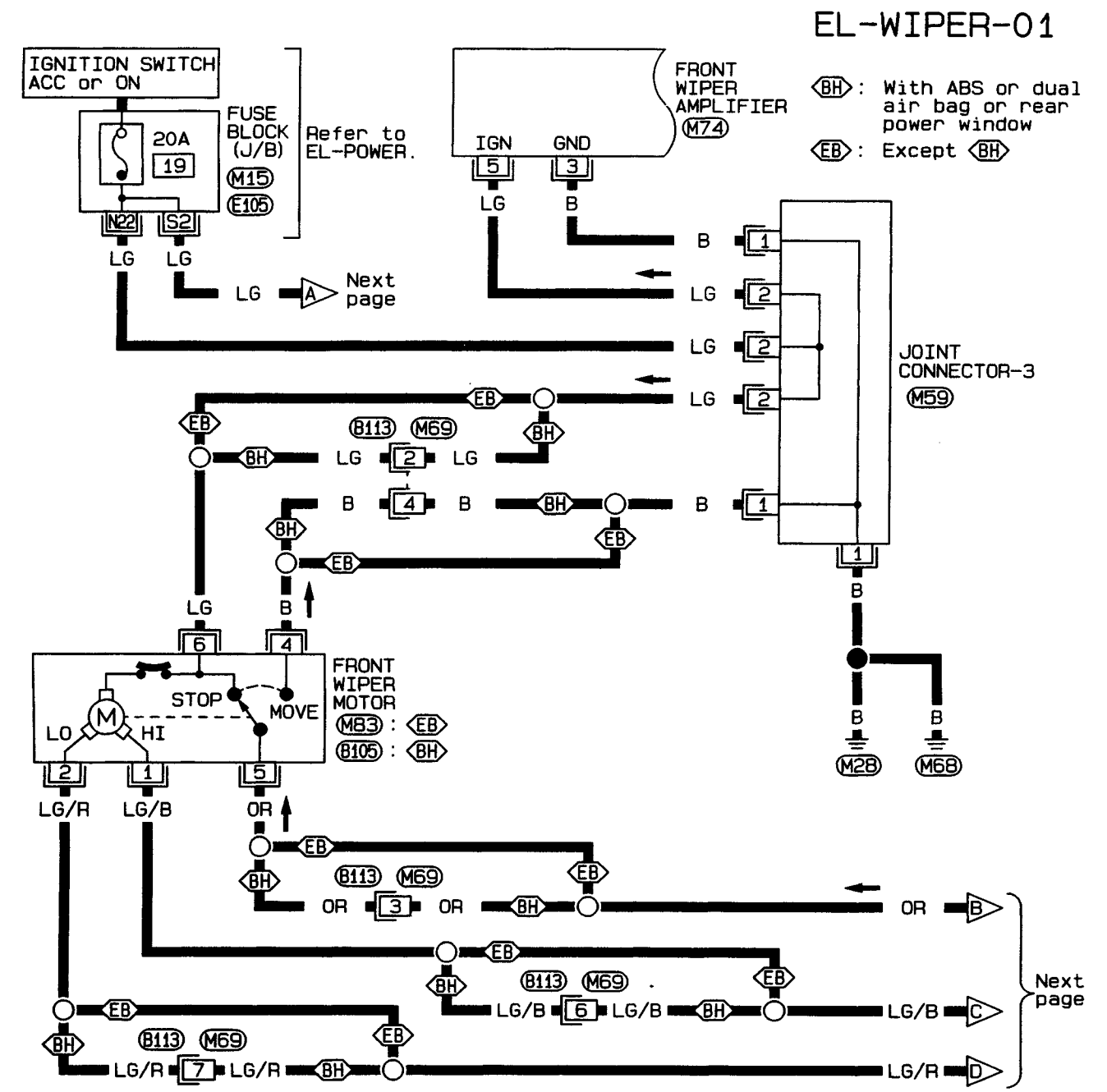

Simpo PDF Merge and Split Unregistered Version - http://www.simpopdf.com

Front Wiper and Washer/Wiring Diagram — WIPER — (Cont'd)

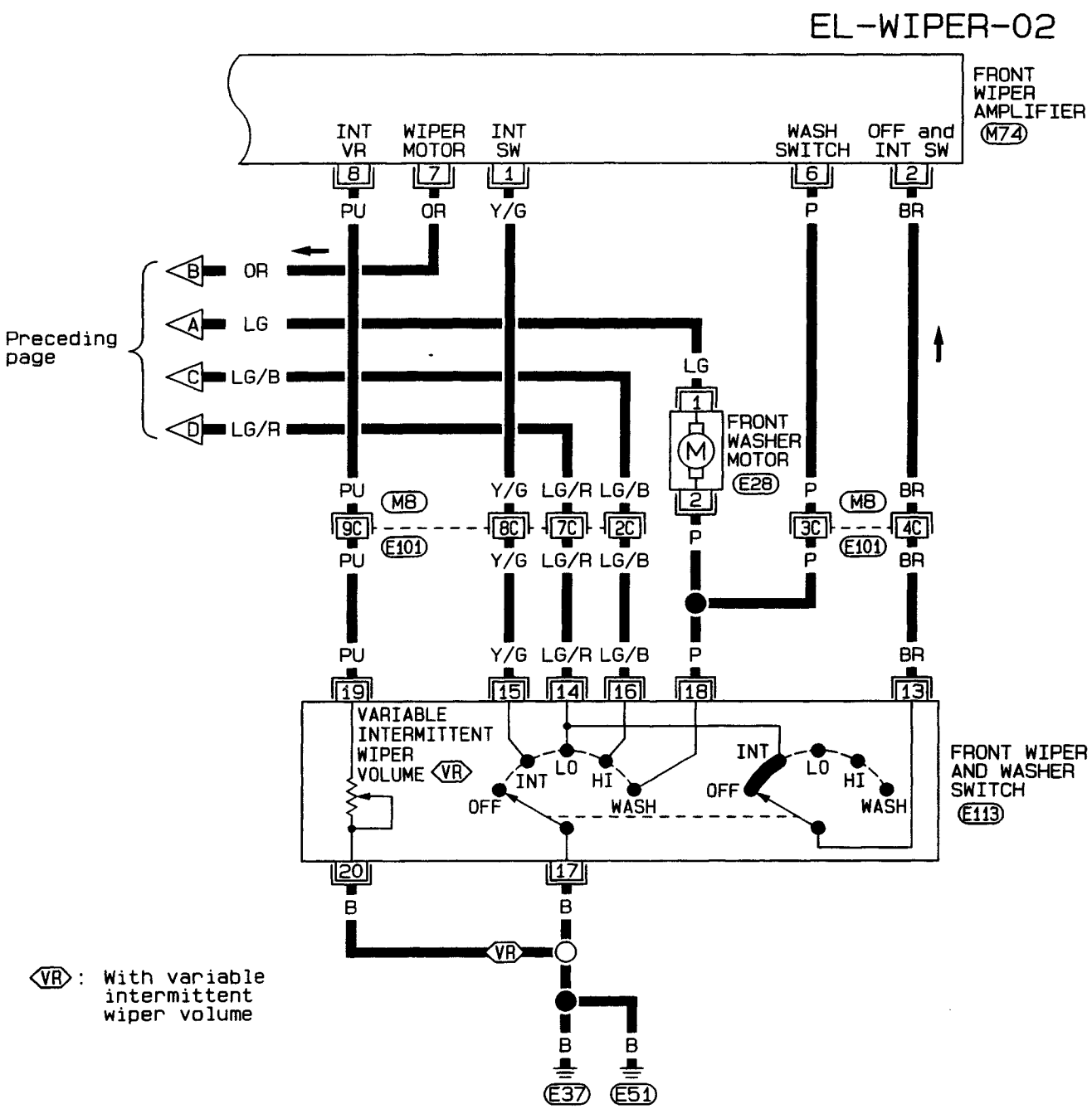

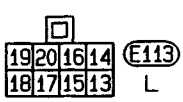

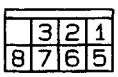

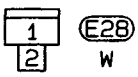

Refer to last page (Foldout page).
M8, E101

EL

Simpo PDF Merge and Split Unregistered Version - http://www.simpopdf.com

Front Wiper and Washer/Wiring Diagram — WIPER — (Cont'd)

RHD MODELS

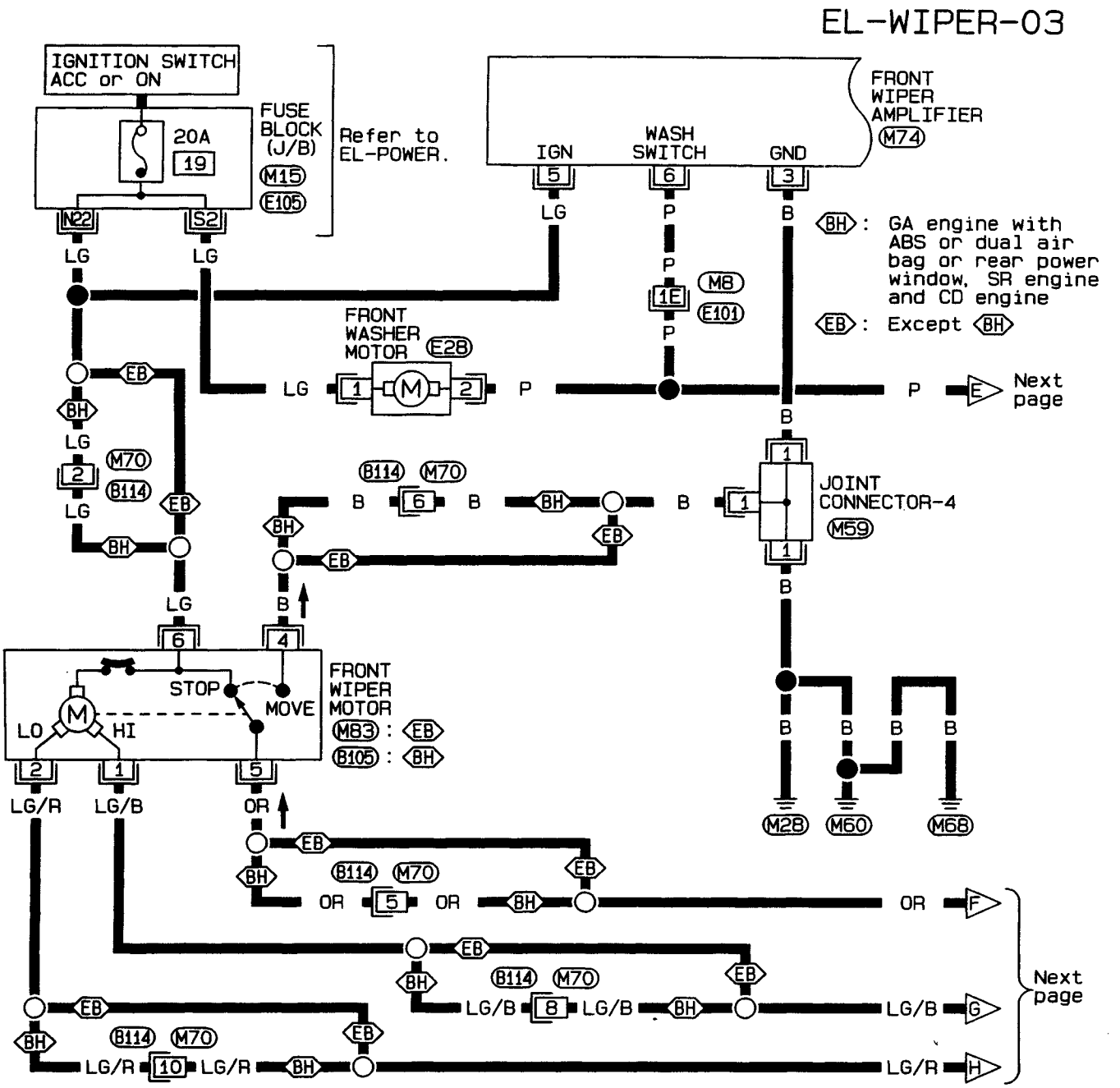

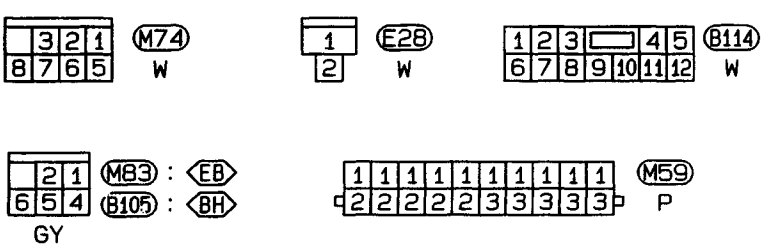

Refer to last page (Foldout page).
M8 , E101
M15 , E105

HEL088

Simpo PDF Merge and Split Unregistered Version - http://www.simpopdf.com

Front Wiper and Washer/Wiring Diagram — WIPER — (Cont'd)

EL-WIPER-04

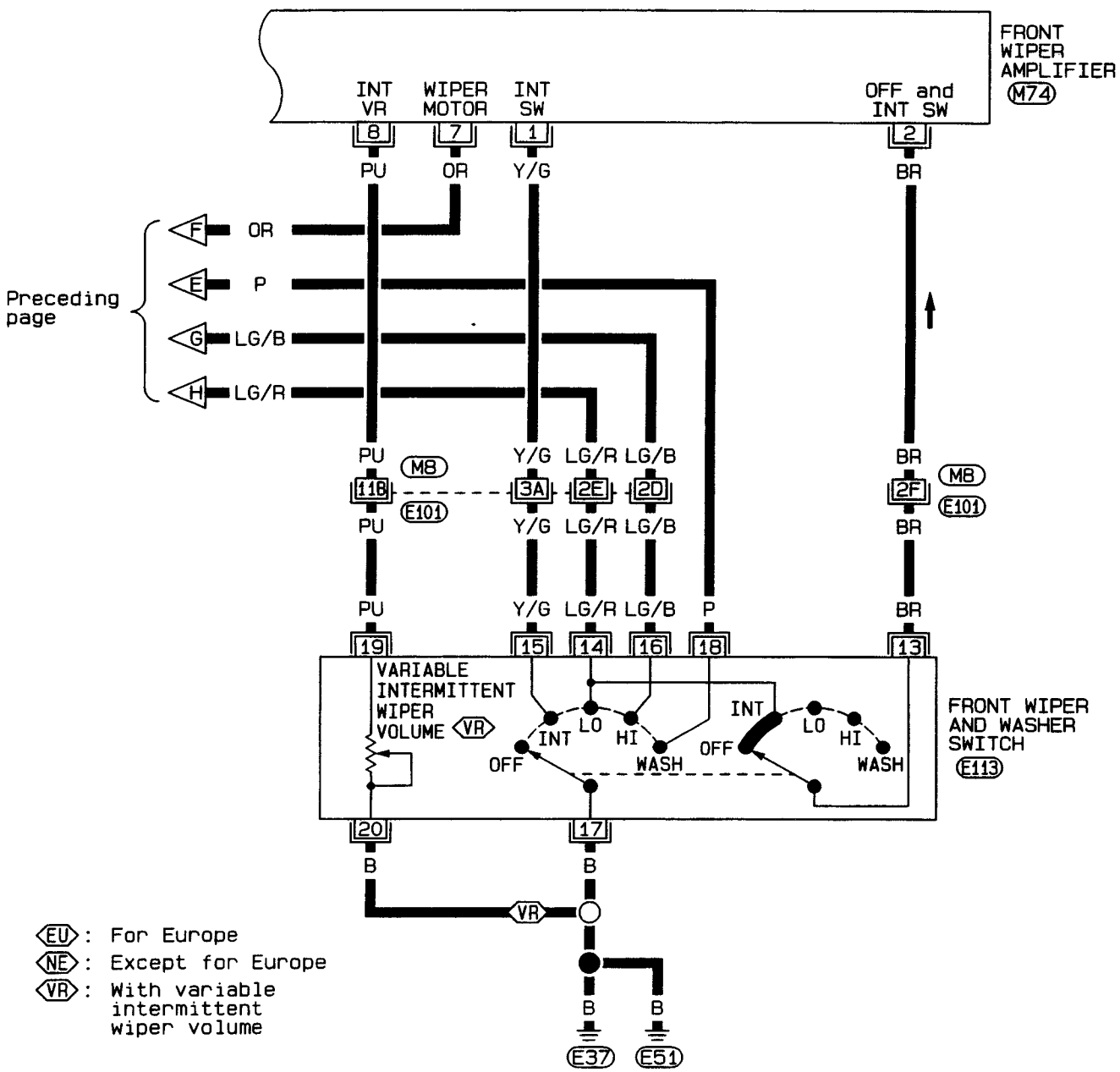

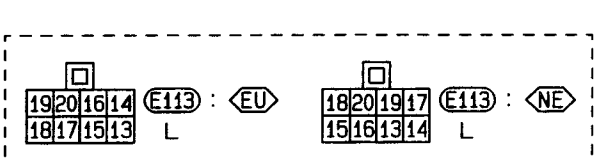

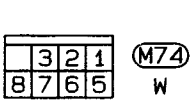

Refer to last page (Foldout page).

M8 , E101

EL

HEL089

Simpo PDF Merge and Split Unregistered Version - http://www.simpopdf.com

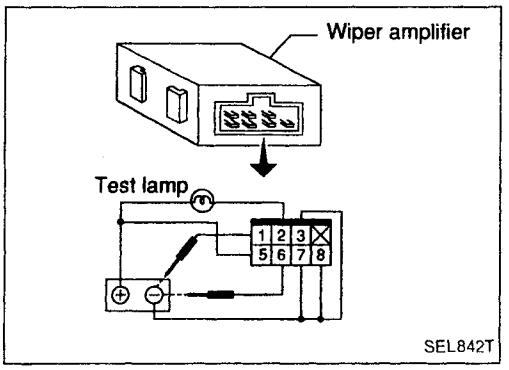

Front Wiper Amplifier Check

1. Connect as shown in the figure at left.
2. If test lamp comes on when connected to terminal ① or ⑥ and battery ground, wiper amplifier is normal.

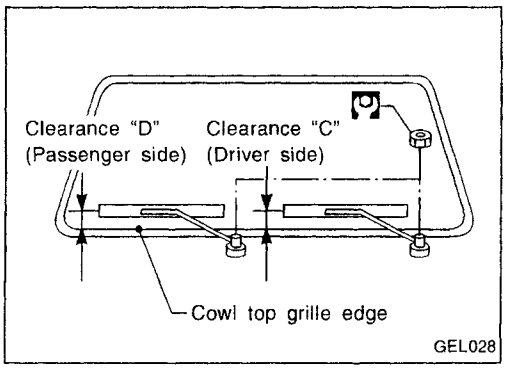

Front Wiper Installation and Adjustment

1. Prior to wiper arm installation, turn on wiper switch to operate wiper motor and then turn it "OFF" (Auto Stop).
2. Lift the blade up and then set it down onto glass surface. Set the blade center to clearance "C" & "D" immediately before tightening nut.
3. Eject washer fluid. Turn on wiper switch to operate wiper motor and then turn it "OFF".
4. Ensure that wiper blades stop within clearance "C" & "D".
   Clearance "C": 23 - 38 mm (0.91 - 1.50 in)
   Clearance "D": 27 - 42 mm (1.06 - 1.65 in)

- Tighten windshield wiper arm nuts to specified torque.
  : 21 - 26 N·m (2.1 - 2.7 kg-m, 15 - 20 ft-lb)

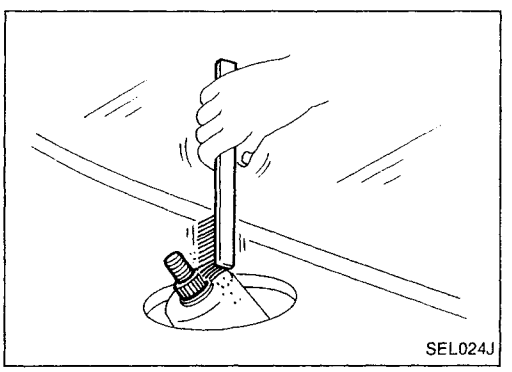

- **Before reinstalling wiper arm, clean up the pivot area as illustrated. This will reduce possibility of wiper arm looseness.**

Simpo PDF Merge and Split Unregistered Version - http://www.simpopdf.com

Front Wiper Linkage

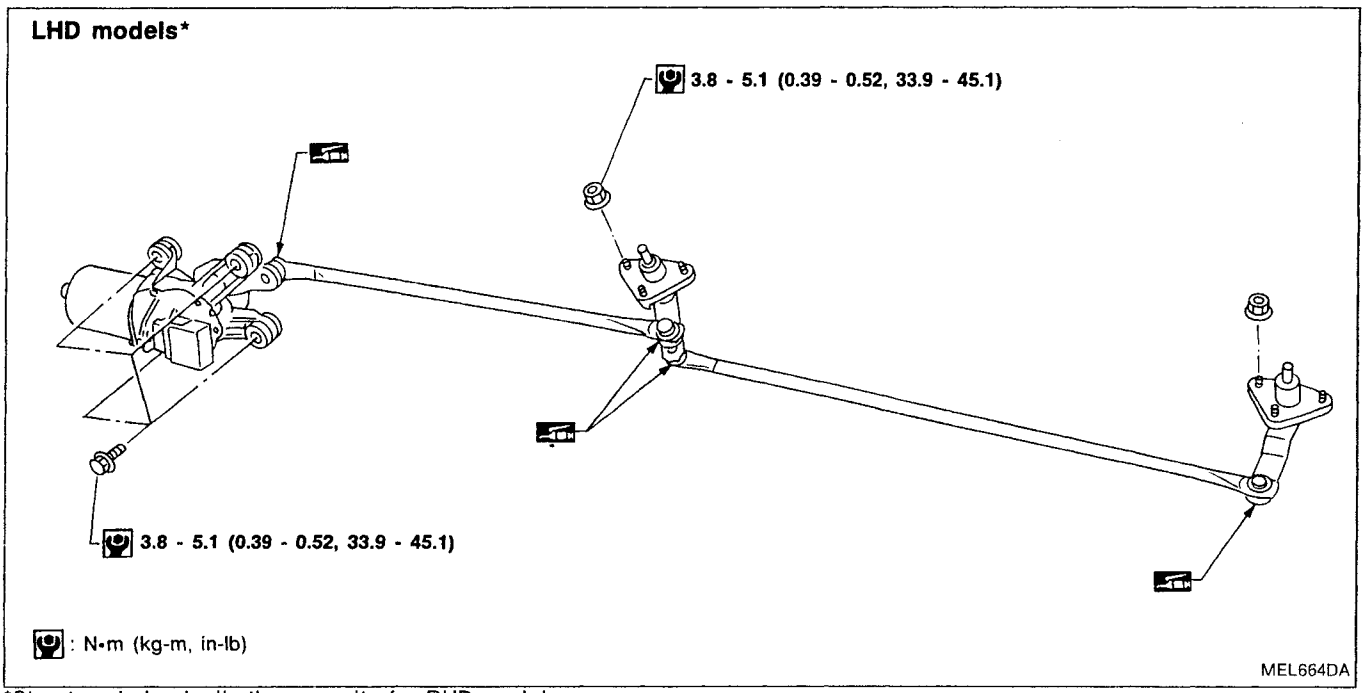

*Structure is basically the opposite for RHD models.

REMOVAL

1. Remove 4 bolts that secure wiper motor.
2. Detach wiper motor from wiper linkage at ball joint.
3. Remove wiper linkage.

Be careful not to break ball joint rubber boot.

INSTALLATION

- Grease ball joint portion before installation.

1. Installation is the reverse order of removal.

EL

Simpo PDF Merge and Split Unregistered Version - http://www.simpopdf.com

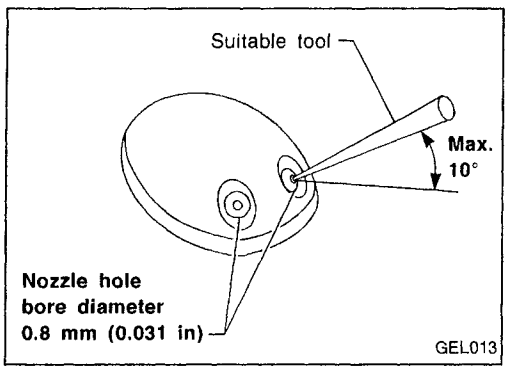

Front Washer Nozzle Adjustment

- Adjust washer nozzle with suitable tool as shown in the figure at left.
  Adjustable range: ±10° (In any direction)

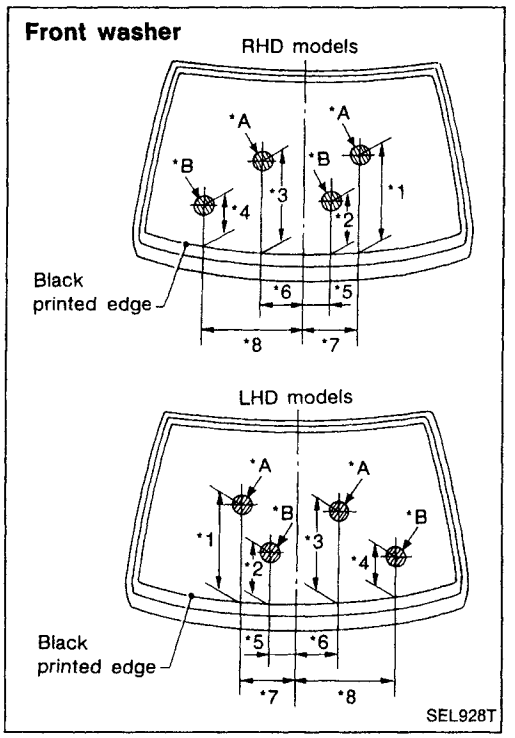

Unit: mm (in)

*1	310 (12.20)	*5	160 (6.30)
*2	265 (10.43)	*6	170 (6.69)
*3	365 (14.37)	*7	345 (13.58)
*4	175 (6.89)	*8	410 (16.14)

*A: The diameters of these circles are less than 140 mm (5.51 in).
*B: The diameters of these circles are less than 80 mm (3.15 in).

Front Washer Tube Layout

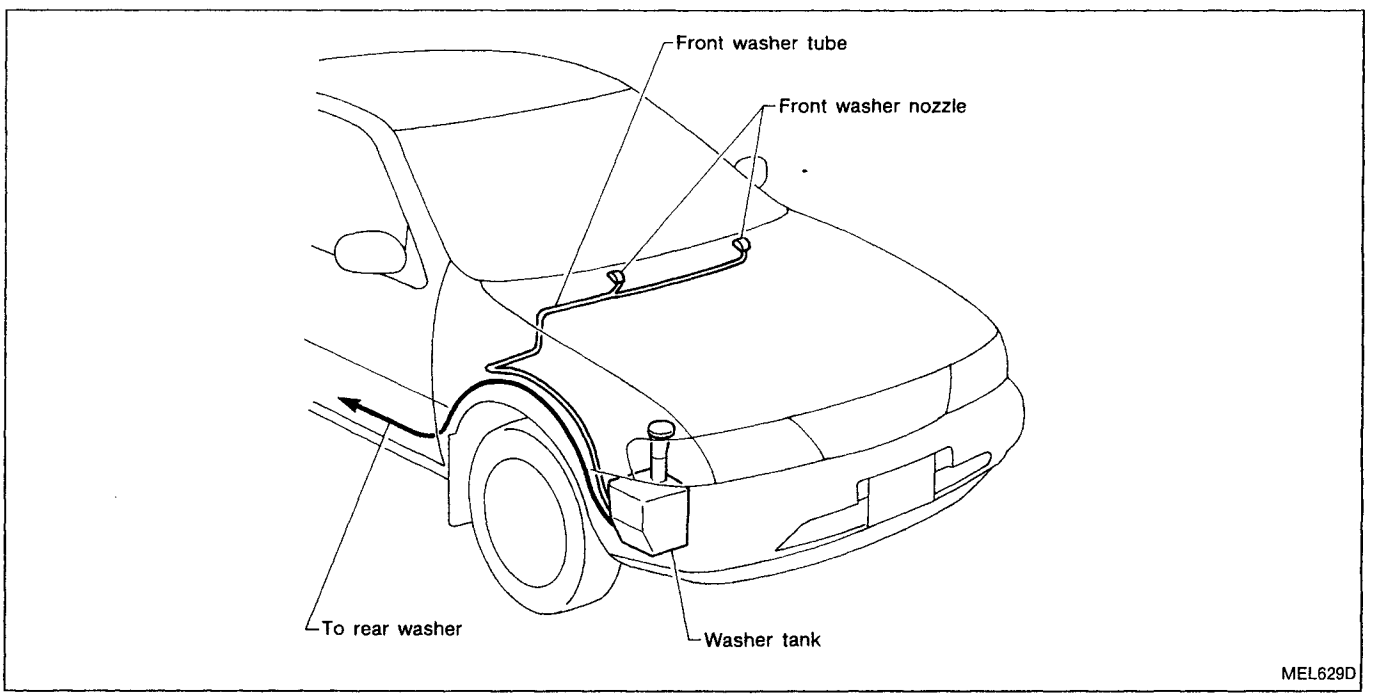

Simpo PDF Merge and Split Unregistered Version - http://www.simpopdf.com

Rear Wiper and Washer/System Description

WIPER OPERATION

The rear wiper switch is controlled by a ring built into the combination switch.
There are two wiper switch positions:

- ON (LO speed)
- INT (Intermittent)

With the ignition switch in the ACC or ON position, power is supplied

- through 10A fuse (No. 9, located in the fuse block)
- to rear wiper motor terminal ④, and
- to rear wiper relay terminal ①.

Low speed wiper operation

Ground is supplied to rear wiper switch terminal ㉔ through body grounds E37 and E51.
When the rear wiper is placed in the ON position, ground is supplied

- through rear wiper switch terminal ㉒
- to rear wiper relay terminal ②.

The rear wiper relay is energized and ground is supplied

- to rear wiper motor terminal ①
- through rear wiper relay terminal ③
- to rear wiper relay terminal ⑤
- through body grounds E37 and E51.

Auto stop operation

With the rear wiper switch turned OFF, rear wiper motor will continue to operate until wiper arm reaches rear window base.
When wiper arm is not located at base of rear window with rear wiper switch OFF, rear wiper relay is not energized and ground is supplied

- to rear wiper motor terminal ①
- through rear wiper relay terminal ③
- to rear wiper relay terminal ④
- through rear wiper motor terminal ③, in order to continue rear wiper motor operation at low speed.

Ground is also supplied

- to rear wiper motor terminal ②
- through body grounds B11, B32 and D105.

When wiper arm reaches base of rear window, rear wiper motor terminals ① and ④ are connected instead of terminals ① and ③. Rear wiper motor will then stop wiper arm at the PARK position.

Intermittent operation

The rear wiper motor operates the wiper arm one time at low speed at an interval of approximately 7 seconds. This feature is controlled by rear wiper amplifier.
With the ignition switch in the ACC or ON position, power is supplied

- through 10A fuse (No. 9, located in the fuse block)
- to rear wiper relay terminal ①.

When the rear wiper switch is placed in the INT position, ground is supplied

- to rear wiper amplifier terminal ②
- from rear wiper switch terminal ㉑
- through body grounds E37 and E51.

Ground is also supplied

- to rear wiper relay terminal ②
- through rear wiper amplifier terminal ⑥
- to rear wiper amplifier terminal ⑤
- through body grounds M28, M60 and M68.

Then the rear wiper relay is energized and ground is supplied

- to rear wiper motor terminal ①
- through rear wiper relay terminal ③
- to rear wiper relay terminal ⑤

EL

Simpo PDF Merge and Split Unregistered Version - http://www.simpopdf.com

Rear Wiper and Washer/System Description (Cont'd)

- through body grounds E37 and E51.

With power and ground supplied, the rear wiper motor operates intermittently.

WASHER OPERATION

With the ignition switch in the ACC or ON position, power is supplied

- through 10A fuse (No. 9, located in the fuse block)
- to rear washer motor terminal ①.

When the ring is turned WASH position, ground is supplied

- to rear washer motor terminal ②, and
- to rear wiper amplifier terminal ①
- from terminal ㉓ of rear wiper switch
- through terminal ㉔ of rear wiper switch, and
- through body grounds E37 and E51.

With power and ground is supplied, the rear washer motor operates.

The rear wiper motor operates when the ring is turned to WASH position for one second or more and for approximately 3 seconds after the ring is released. This feature is controlled by the rear wiper amplifier in the same manner as the intermittent operation.

Simpo PDF Merge and Split Unregistered Version - https://www.simpopdf.com

Rear Wiper and Washer/Wiring Diagram — WIP/R —

LHD MODELS

EL-WIP/R-01

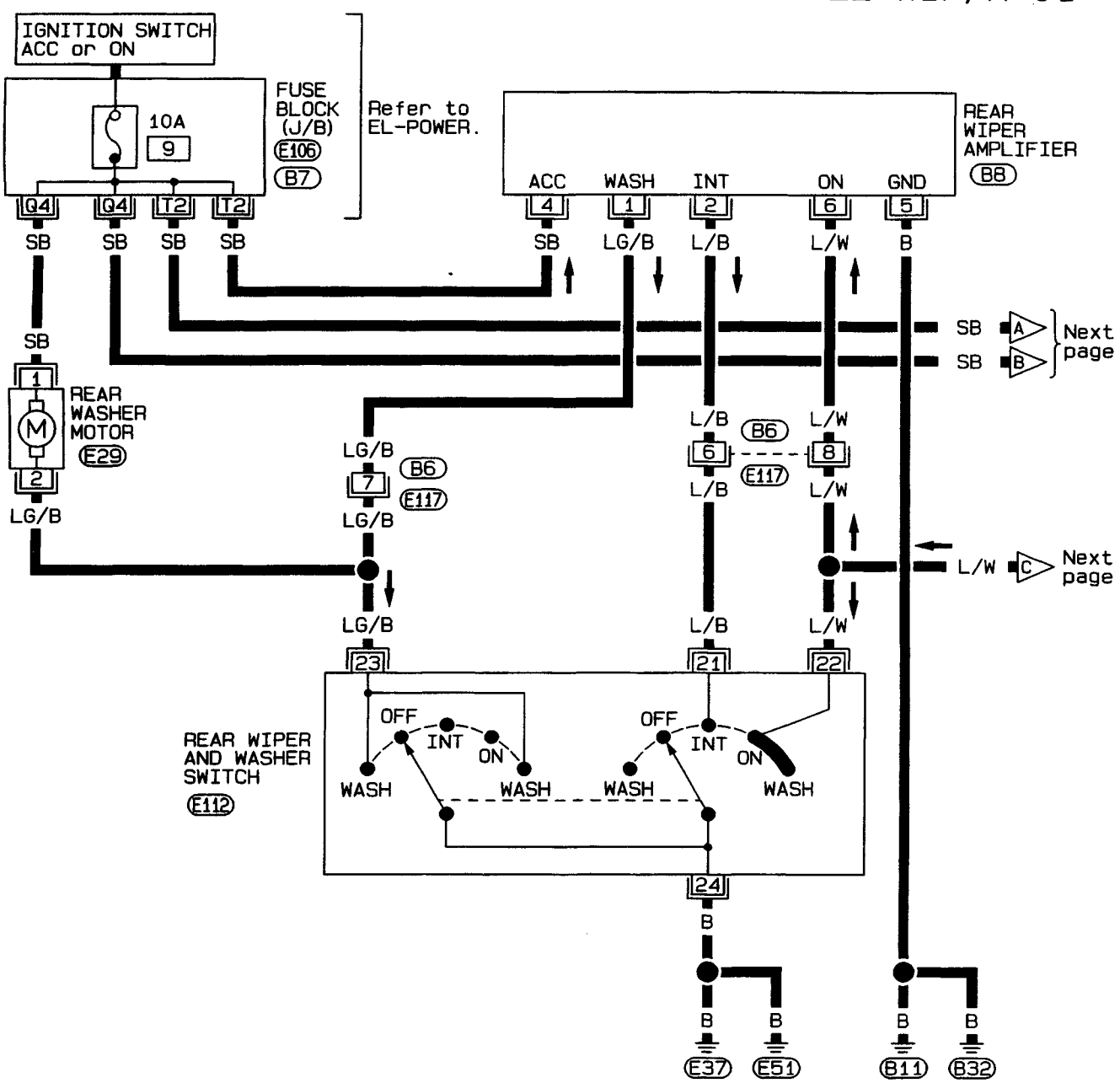

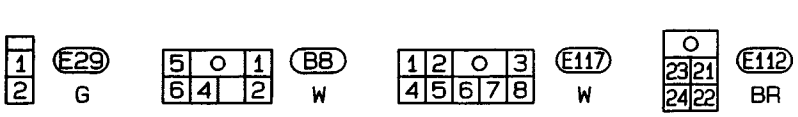

Refer to last page (Foldout page).
E106, B7

HEL090

Simpo PDF Merge and Split Unregistered Version - http://www.simpopdf.com

Rear Wiper and Washer/Wiring Diagram — WIP/R — (Cont'd)

EL-WIP/R-02

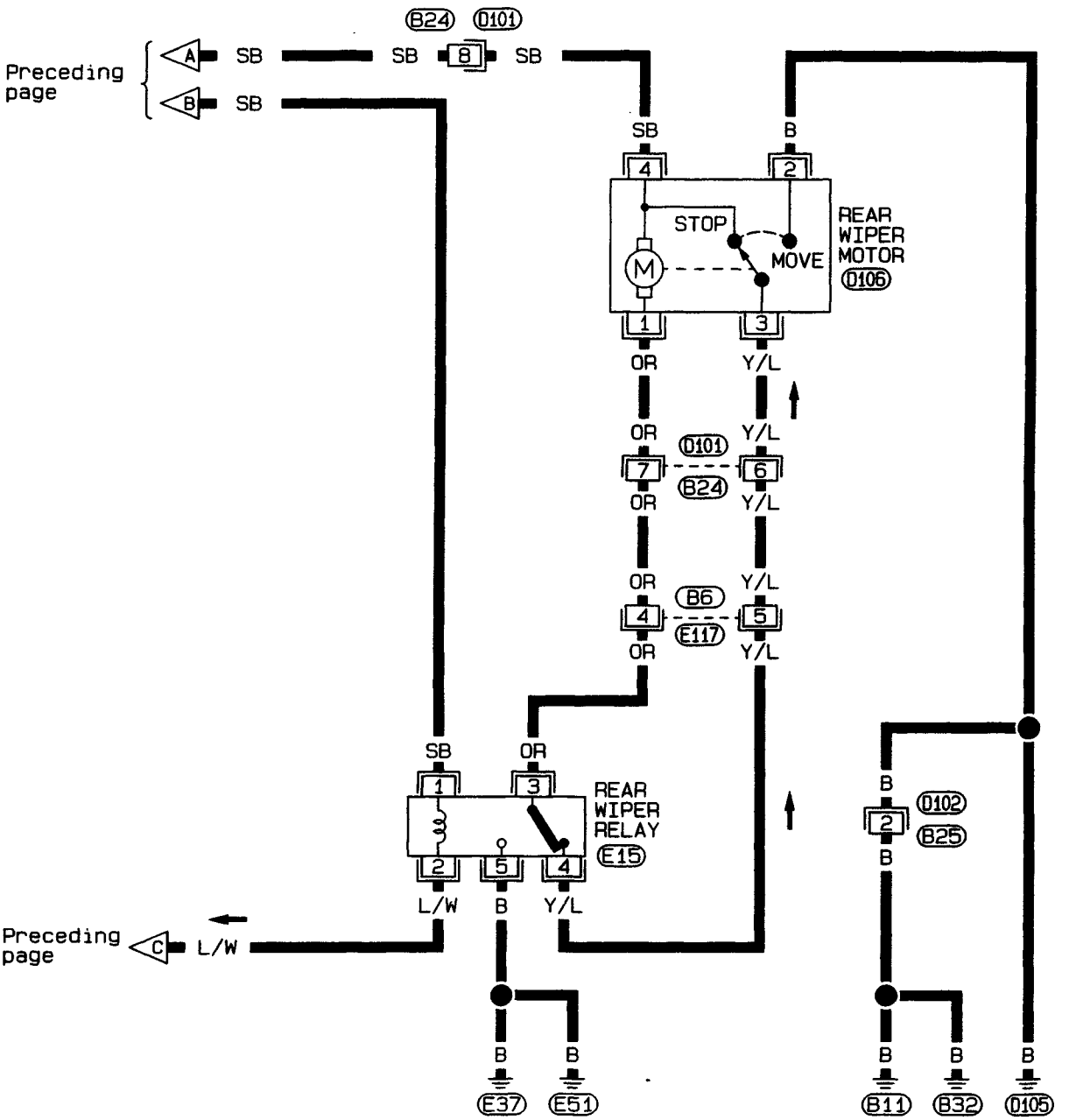

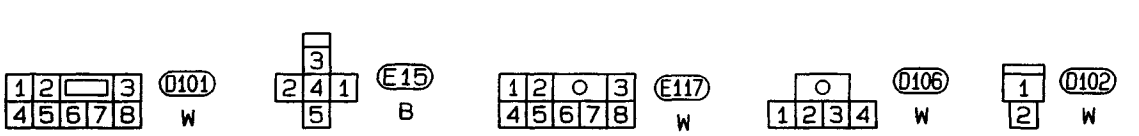

HEL091

Simpo PDF Merge and Split Unregistered Version - http://www.simpopdf.com

Rear Wiper and Washer/Wiring Diagram — WIP/R — (Cont'd)

RHD MODELS

EL-WIP/R-03

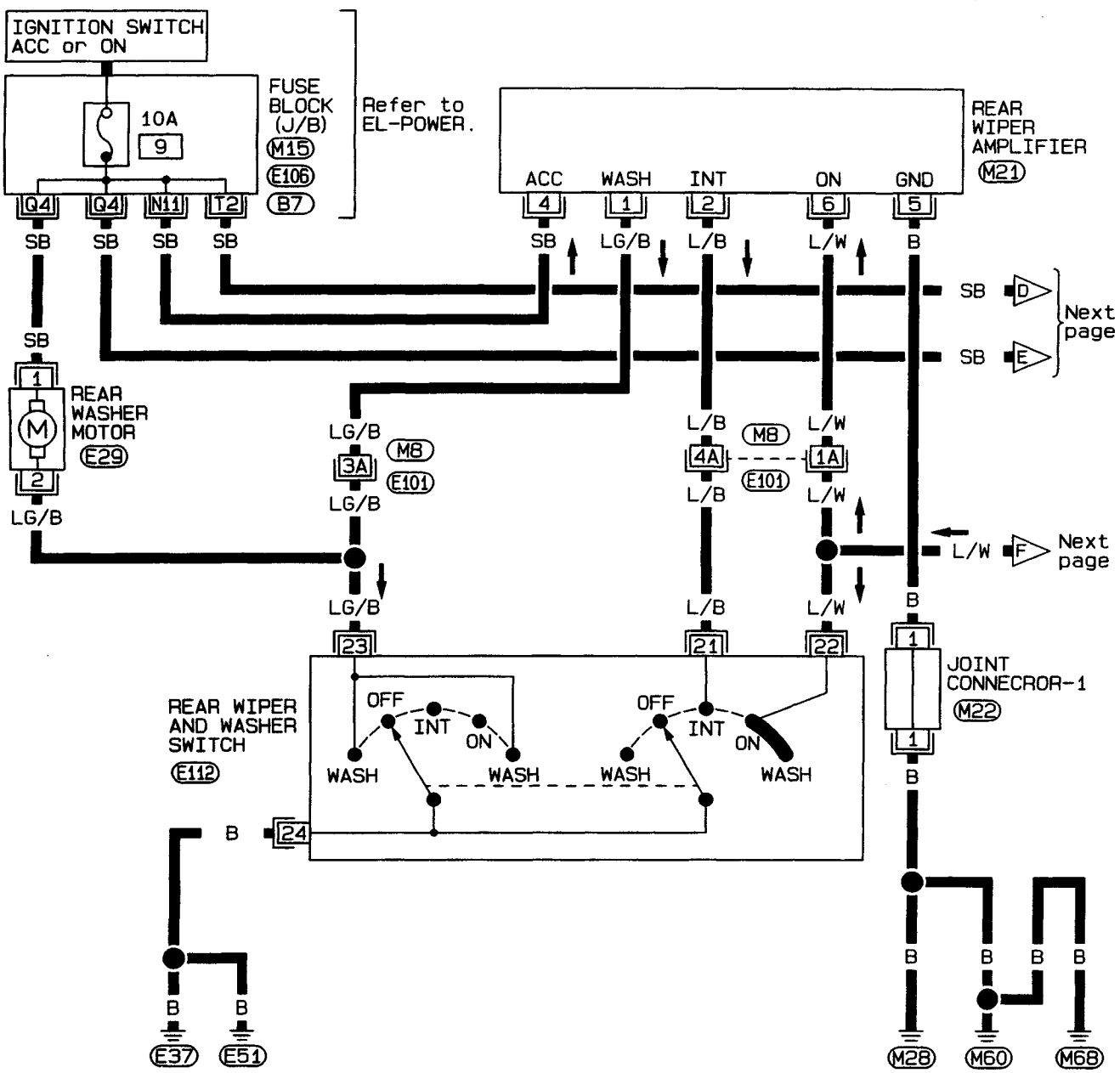

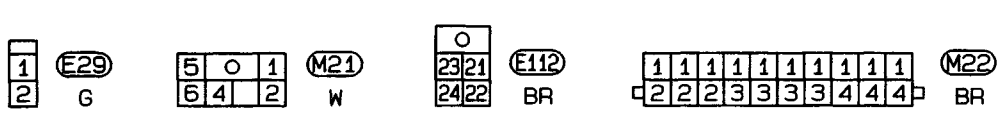

Refer to last page (Foldout page).

M8, E101

M15, E106, B7

EL

Simpo PDF Merge and Split Unregistered Version - http://www.simpopdf.com

Rear Wiper and Washer/Wiring Diagram — WIP/R — (Cont'd)

EL-WIP/R-04

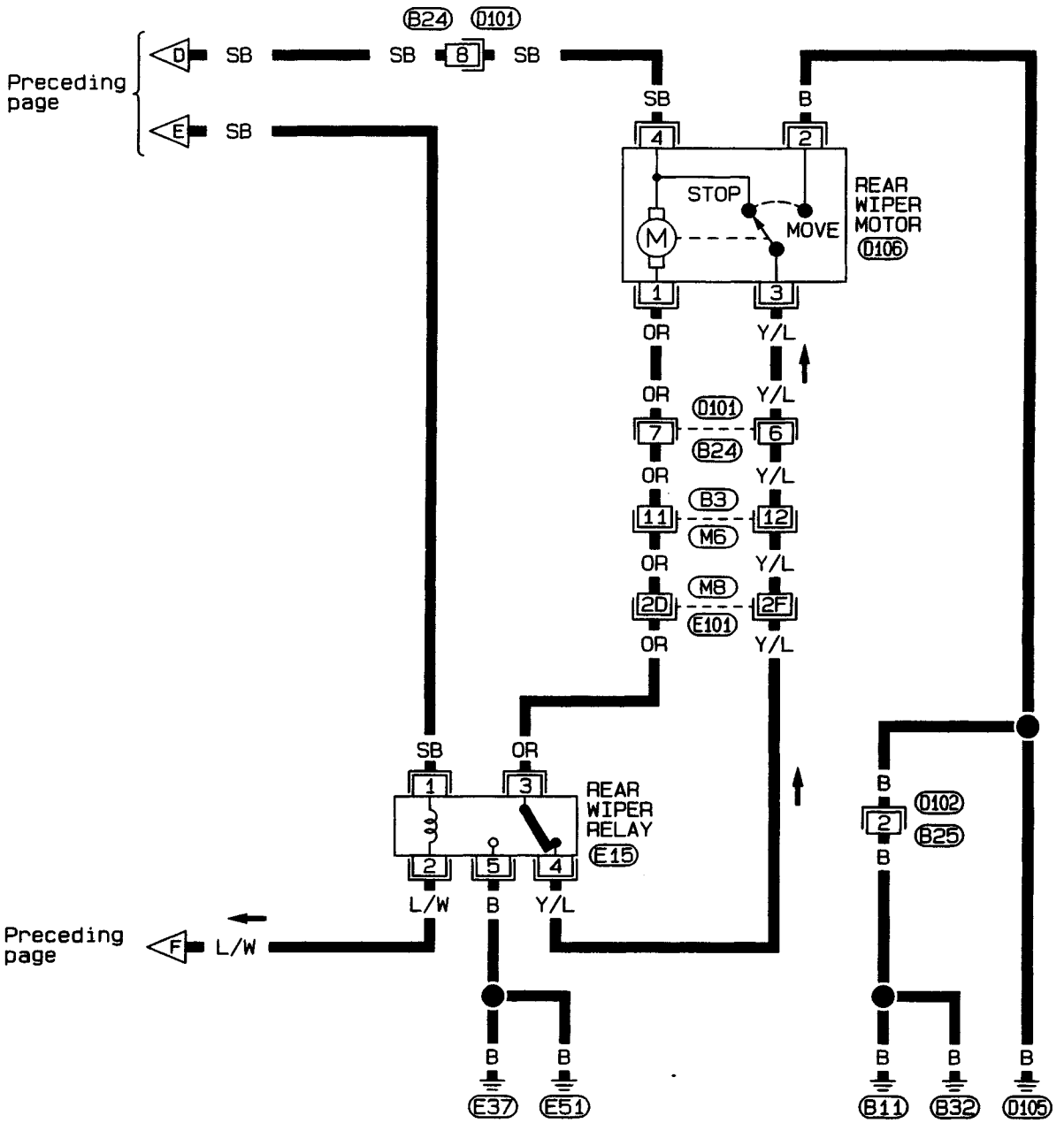

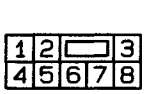

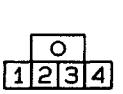



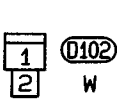

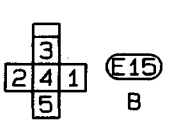

Refer to last page (Foldout page).

M8, E101

HEL093

Simpo PDF Merge and Split Unregistered Version - http://www.simpopdf.com

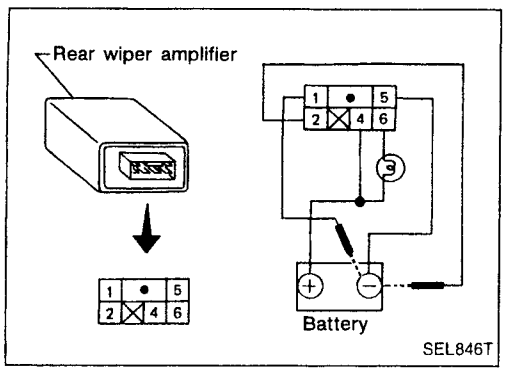

Rear Wiper Amplifier Check

1. Connect as shown in the figure at left.
2. If test lamp illuminates when connected to terminal ① or ② and battery ground, wiper amplifier is normal.

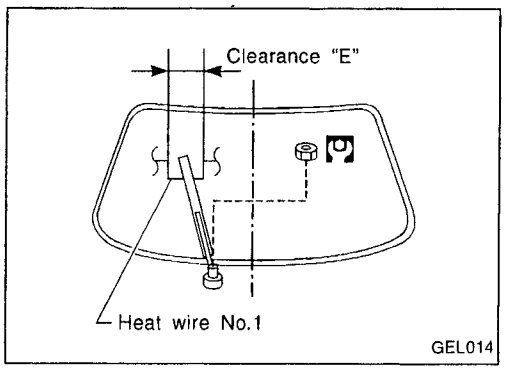

Rear Wiper Installation and Adjustment

1. Prior to wiper arm installation, turn on wiper switch to operate wiper motor and then turn it "OFF" (Auto Stop).
2. Lift the blade up and then set it down onto glass surface. Set the blade center to clearance "E" immediately before tightening nut.
3. Eject washer fluid. Turn on wiper switch to operate wiper motor and then turn it "OFF".
4. Ensure that wiper blades stop within clearance "E".
   Clearance "E": 20 mm (0.79 in)

- Tighten windshield wiper arm nuts to specified torque.
  : 13 - 18 N·m (1.3 - 1.8 kg-m, 9 - 13 ft-lb)

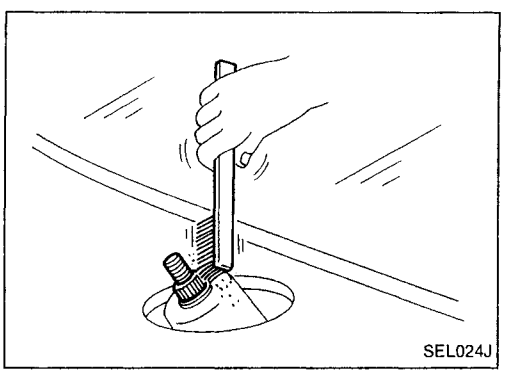

- **Before reinstalling wiper arm, clean up the pivot area as illustrated. This will reduce possibility of wiper arm looseness.**

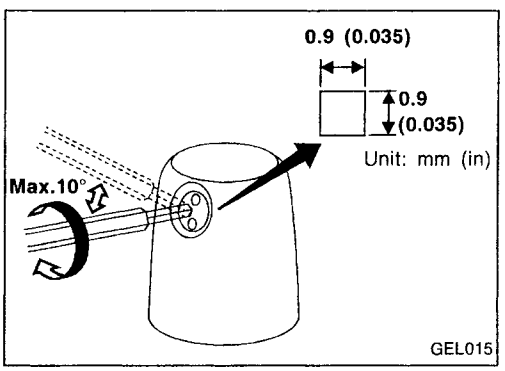

Rear Washer Nozzle Adjustment

- Adjust washer nozzle with suitable tool as shown in the figure at left.
  Adjustable range: ±10° (In any direction)

EL

Simpo PDF Merge and Split Unregistered Version - http://www.simpopdf.com

Rear Washer Nozzle Adjustment (Cont'd)

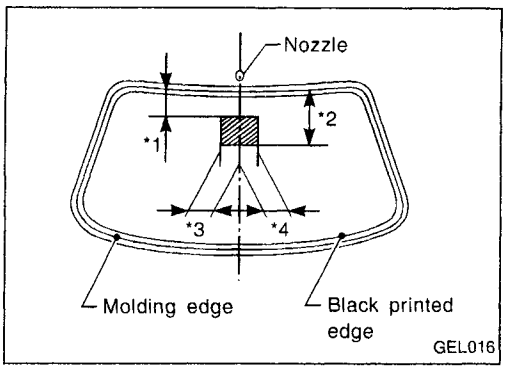

Unit: mm (in)

*1	40 (1.57)	*3	35 (1.38)
*2	95 (3.74)	*4	35 (1.38)

Rear Washer Tube Layout

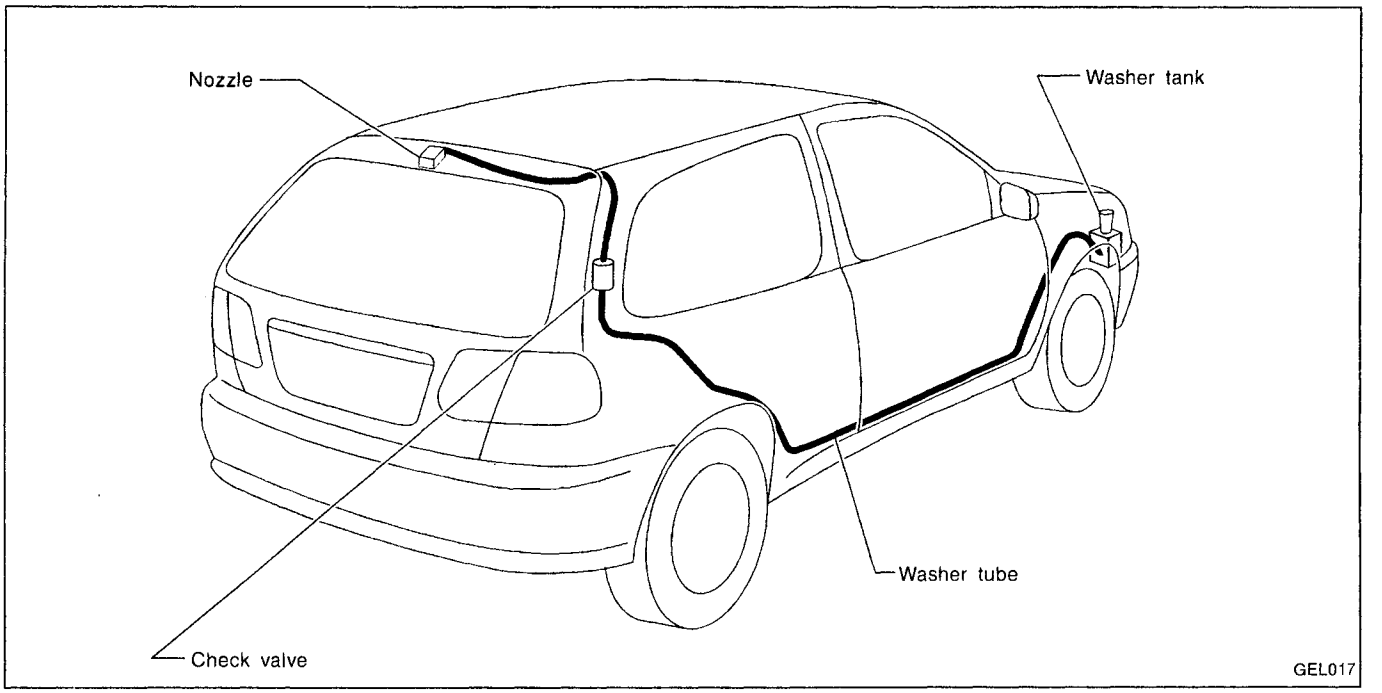

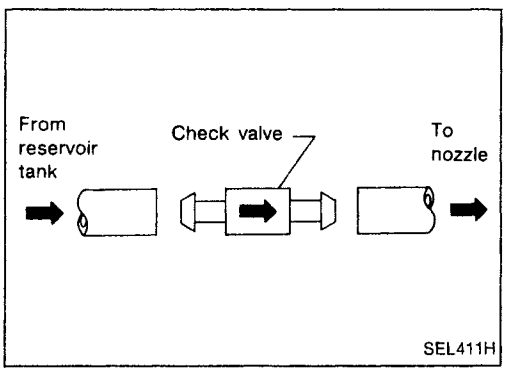

Check Valve (for rear washer)

- A check valve is provided in the washer fluid line. Be careful not to connect check valve to washer tube in the wrong direction.

Simpo PDF Merge and Split Unregistered Version - http://www.simpopdf.com

Headlamp Wiper and Washer/Wiring Diagram — HLC —

EL-HLC-01

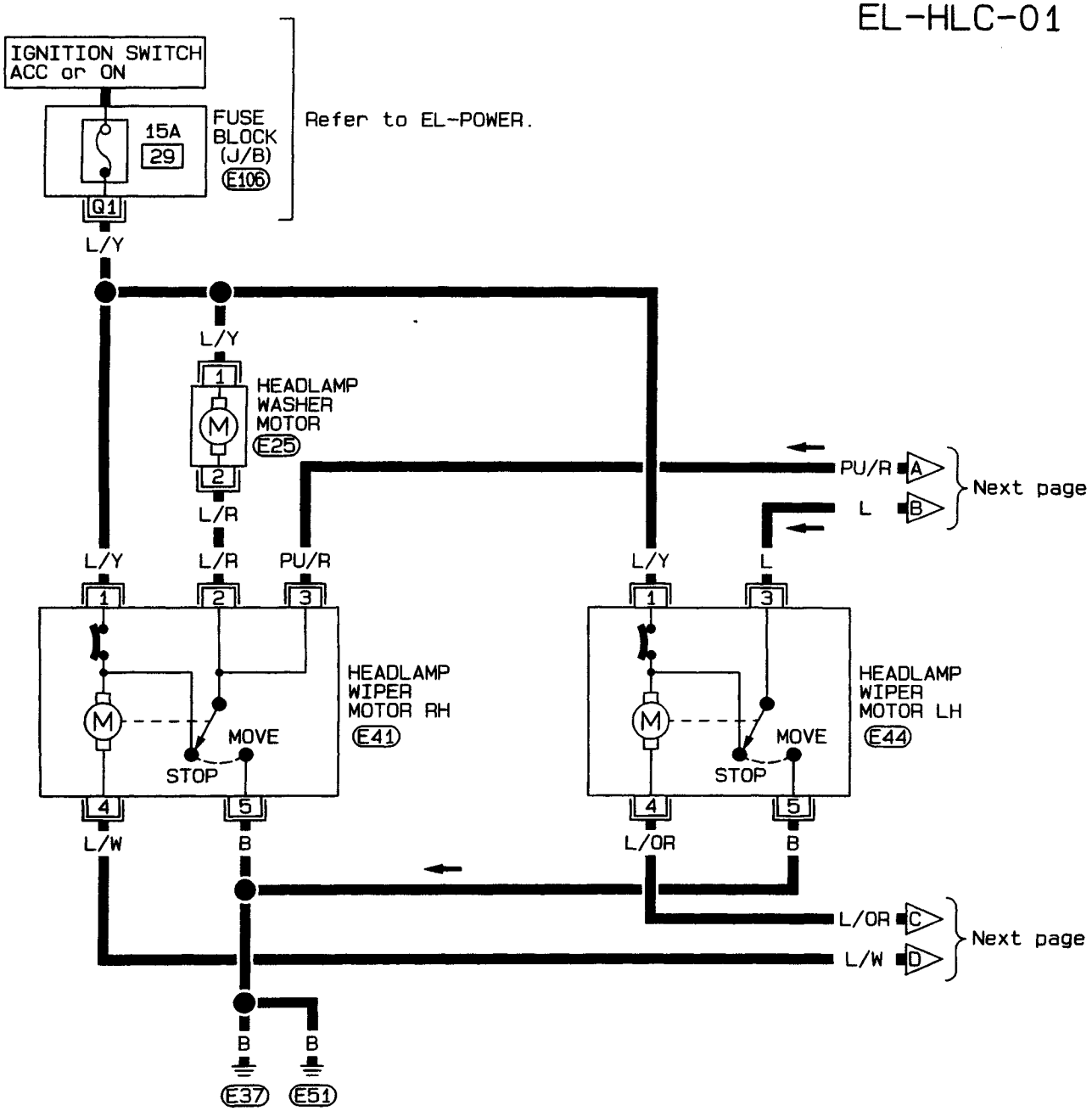

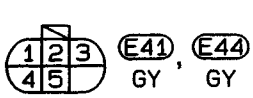

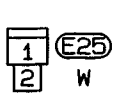

Refer to last page (Foldout page).

E105

EL

HEL094

Simpo PDF Merge and Split Unregistered Version - http://www.simpopdf.com

Headlamp Wiper and Washer/Wiring Diagram — HLC — (Cont'd)

EL-HLC-02

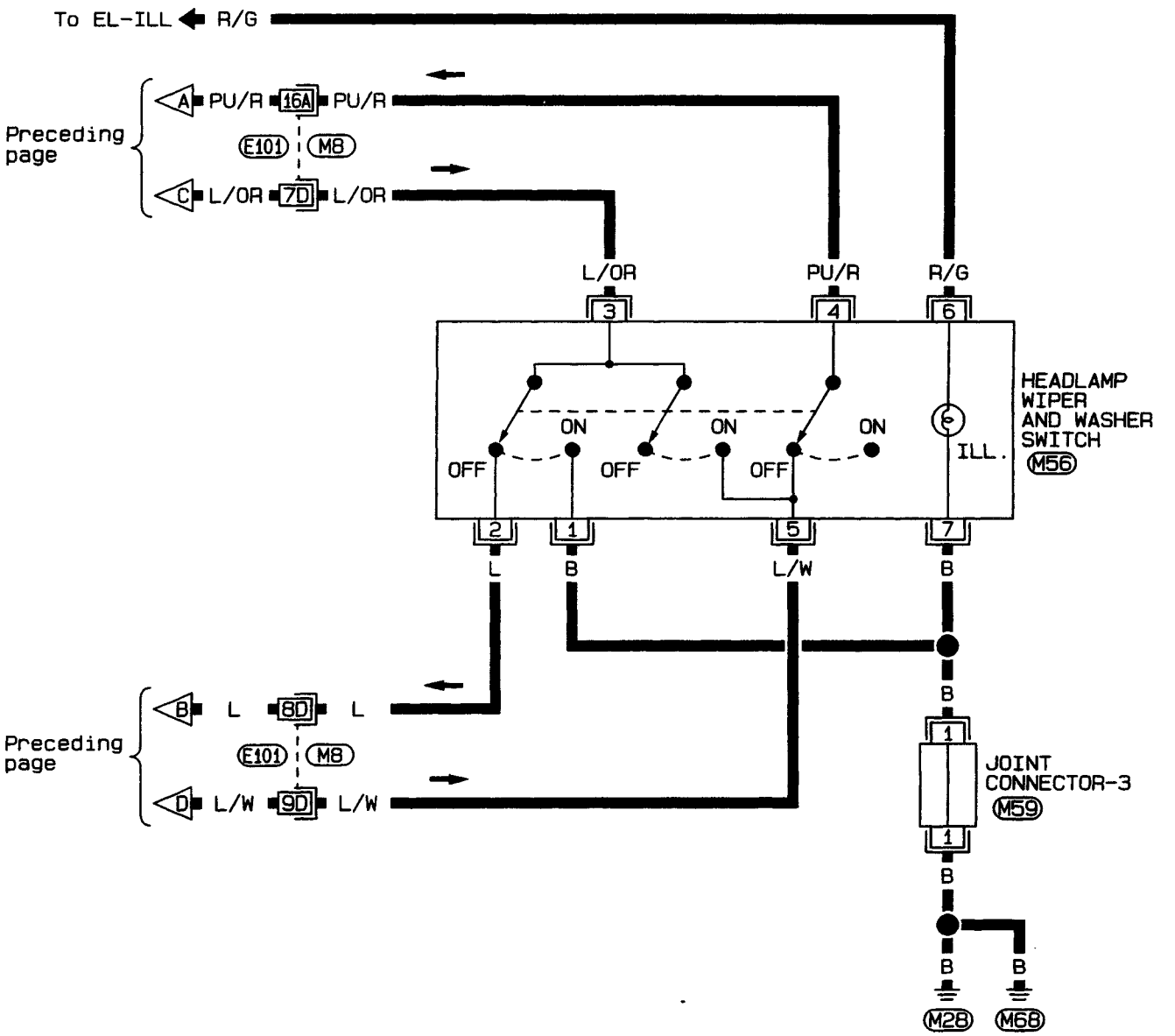



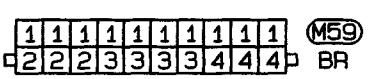

Refer to last page (Foldout page).

M8, E101

HEL095

Simpo PDF Merge and Split Unregistered Version - http://www.simpopdf.com

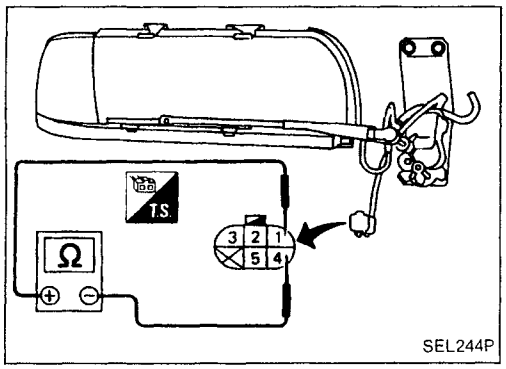

Headlamp Wiper Motor Check

When wiper motor is locked, a protective circuit built into wiper motor activates to stop wiper motor. If wiper motor will not restart even after cause of problems has been eliminated, turn ignition switch OFF and leave it off for approx. 1 to 3 minutes.

1. Turn headlamp wiper switch OFF.
2. Connect ohmmeter and check continuity.

Headlamp wiper motor	Ohmmeter probe (+)	Ohmmeter probe (–)	Continuity
Stop position	①	④	Yes
	①	②	Yes
	①	③	Yes
-	③	⑤	No

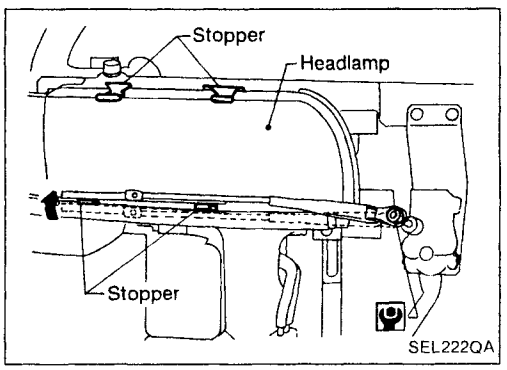

Headlamp Wiper Installation

Tighten nut to secure wiper arm with wiper blade held below lower stopper.
After installing wiper arm, position wiper blade on stopper upper surface.

- Tighten headlamp wiper arm nut to the specified torque.
  : 2.3 - 3.0 N·m (0.23 - 0.31 kg-m, 20.0 - 26.9 in-lb)

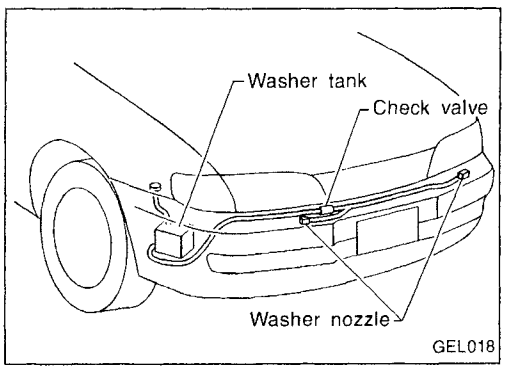

Headlamp Washer Tube Layout

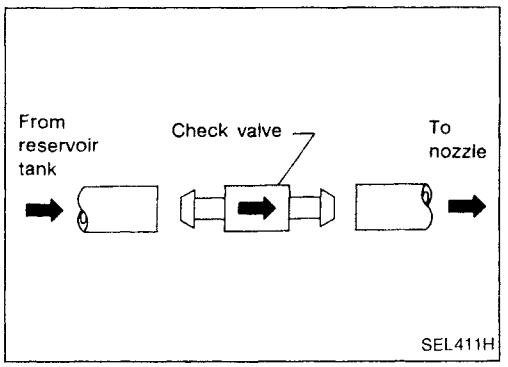

Check Valve (For headlamp washer)

- A check valve is provided in the washer fluid line. Be careful not to connect check valve to washer tube in the wrong direction.

EL

Simpo PDF Merge and Split Unregistered Version - http://www.simpopdf.com

System Description

Power is supplied at all times
- from 25A fusible link (Letter [f], located in the fusible link and fuse box)
- to circuit breaker terminal ①
- through circuit breaker terminal ②
- to power window relay terminal ③.

With ignition switch in ON or START position, power is supplied
- through 7.5A fuse (No.[7] located in the fuse block)
- to power window relay terminal ①.

Ground is supplied to power window relay terminal ②
- through body grounds (M28), (M60) and (M68).

The power window relay is energized and power is supplied
- through power window relay terminal ⑤
- to power window main switch terminals ① and ②,
- to passenger side power window sub-switch terminals ⑤ and ⑥,
- to rear power window sub-switch LH terminal ⑥,
- to rear power window sub-switch RH terminal ⑥.

MANUAL OPERATION

Driver's door

Ground is supplied
- to front power window main switch terminals ③ and ④
- through body grounds (M28), (M60) and (M68).

WINDOW UP

When a driver side switch in the power window main switch is pressed in the up position, power is supplied
- to driver side power window regulator terminal ②
- through power window main switch terminal ⑨.

Ground is supplied
- to driver side power window regulator terminal ①
- through power window main switch terminal ⑧.

Then, the motor raises the window until the switch is released.

WINDOW DOWN

When a driver side switch in the power window main switch is pressed in the down position, power is supplied
- to driver side power window regulator terminal ①
- through power window main switch terminal ⑧.

Ground is supplied
- to driver side power window regulator terminal ②
- through power window main switch terminal ⑨.

Then, the motor lowers the window until the switch is released.

Except driver's door

Ground is supplied
- to power window main switch terminal ③
- through body grounds (M28), (M60) and (M68).

PASSENGER'S DOOR

NOTE:

Figures in parentheses ( ) refer to terminal Nos. arranged in order when the UP or DOWN section of power window switch is pressed.

Operation by main switch

Power is supplied
- through power window main switch (⑤, ⑥)
- to passenger side power window sub-switch (④, ③).

Simpo PDF Merge and Split Unregistered Version - http://www.simpopdf.com

System Description (Cont'd)

The subsequent operations are the same as those outlined under "Operation by sub-switches".
Operation by sub-switches
Power is supplied
- through passenger side power window sub-switch (②, ①)
- to passenger side power window regulator (②, ①).

Ground is supplied
- to passenger side power window regulator (①, ②)
- through passenger side power window sub-switch (①, ②)
- to passenger side power window sub-switch (③, ④)
- through power window main switch (⑥, ⑤).

Then, the motor raises or lowers the window until the switch is released.
REAR DOOR LH

NOTE:

Figures in parentheses ( ) refer to terminal Nos. arranged in order when the UP or DOWN section of power window switch is pressed.

Operation by main switch
Power is supplied
- through power window main switch (⑮, ⑯)
- to rear power window sub-switch LH (④, ③).

The subsequent operations are the same as those outlined under "Operation by sub-switches".
Operation by sub-switches
Power is supplied
- through rear power window sub-switch LH (②, ①)
- to rear power window regulator LH (②, ①).

Ground is supplied
- to rear power window regulator LH (①, ②)
- through rear power window sub-switch LH (①, ②)
- to rear power window sub-switch LH (③, ④)
- through power window main switch LH (⑯, ⑮).

Then, the motor raises or lowers the window until the switch is released.
REAR DOOR RH

NOTE:

Figures in parentheses ( ) refer to terminal Nos. arranged in order when the UP or DOWN section of power window switch is pressed.

Operation by main switch
Power is supplied
- through power window main switch (⑩, ⑪)
- to rear power window sub-switch RH (④, ③).

The subsequent operations are the same as those outlined under "Operation by sub-switches".
Operation by sub-switches
Power is supplied
- through rear power window sub-switch RH (②, ①)
- to rear power window regulator RH (②, ①).

Ground is supplied
- to rear power window regulator RH (①, ②)
- through rear power window sub-switch RH (①, ②)
- to rear power window sub-switch RH (③, ④)
- through power window main switch (⑪, ⑩)

Then, the motor raises or lowers the window until the switch is released.

AUTO OPERATION

The power window AUTO feature enables the driver to open or close the driver's window without holding the window switch in the respective position.
When the AUTO switch in the main switch is pressed and released, the driver's window will travel to the fully open or closed position.

Simpo PDF Merge and Split Unregistered Version - http://www.simpopdf.com

System Description (Cont'd)

POWER WINDOW LOCK

The power window lock is designed to lock-out window operation to all windows except the driver's door window.

When the lock switch is pressed to lock position, ground of the passenger side switch, rear RH switch and rear LH switch in the power window main switch is disconnected. This prevents the power window motors from operating.

Simpo PDF Merge and Split Unregistered Version - http://www.simpopdf.com

Schematic

LHD MODELS AND RHD MODELS EXCEPT FOR EUROPE AND AUSTRALIA

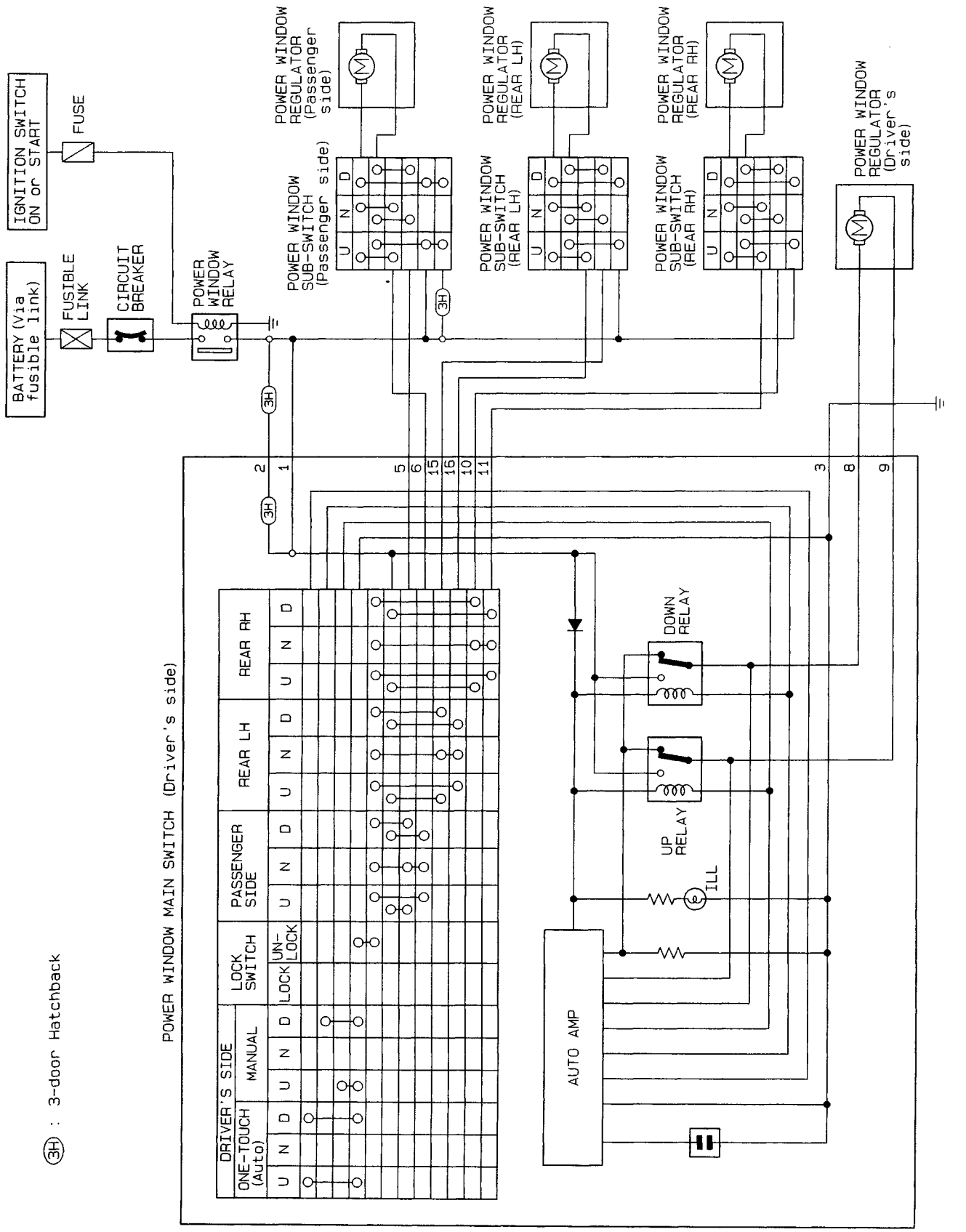

HEL097

Simpo PDF Merge and Split Unregistered Version - http://www.simpopdf.com

Schematic (Cont'd)

RHD MODELS FOR EUROPE AND AUSTRALIA

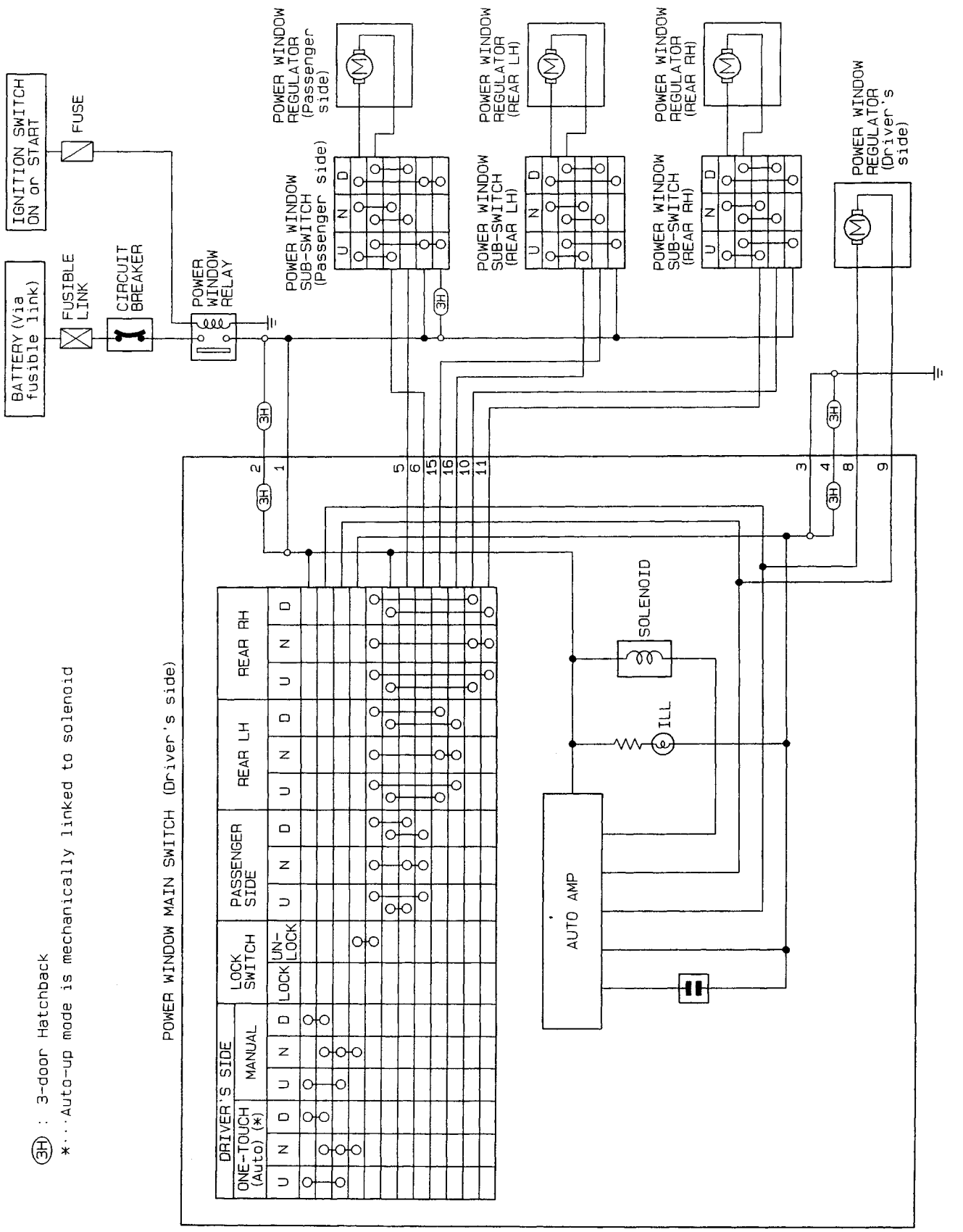

HEL098

Simpo PDF Merge and Split Unregistered Version - http://www.simpopdf.com

Wiring Diagram — WINDOW —

LHD MODELS

EL-WINDOW-01

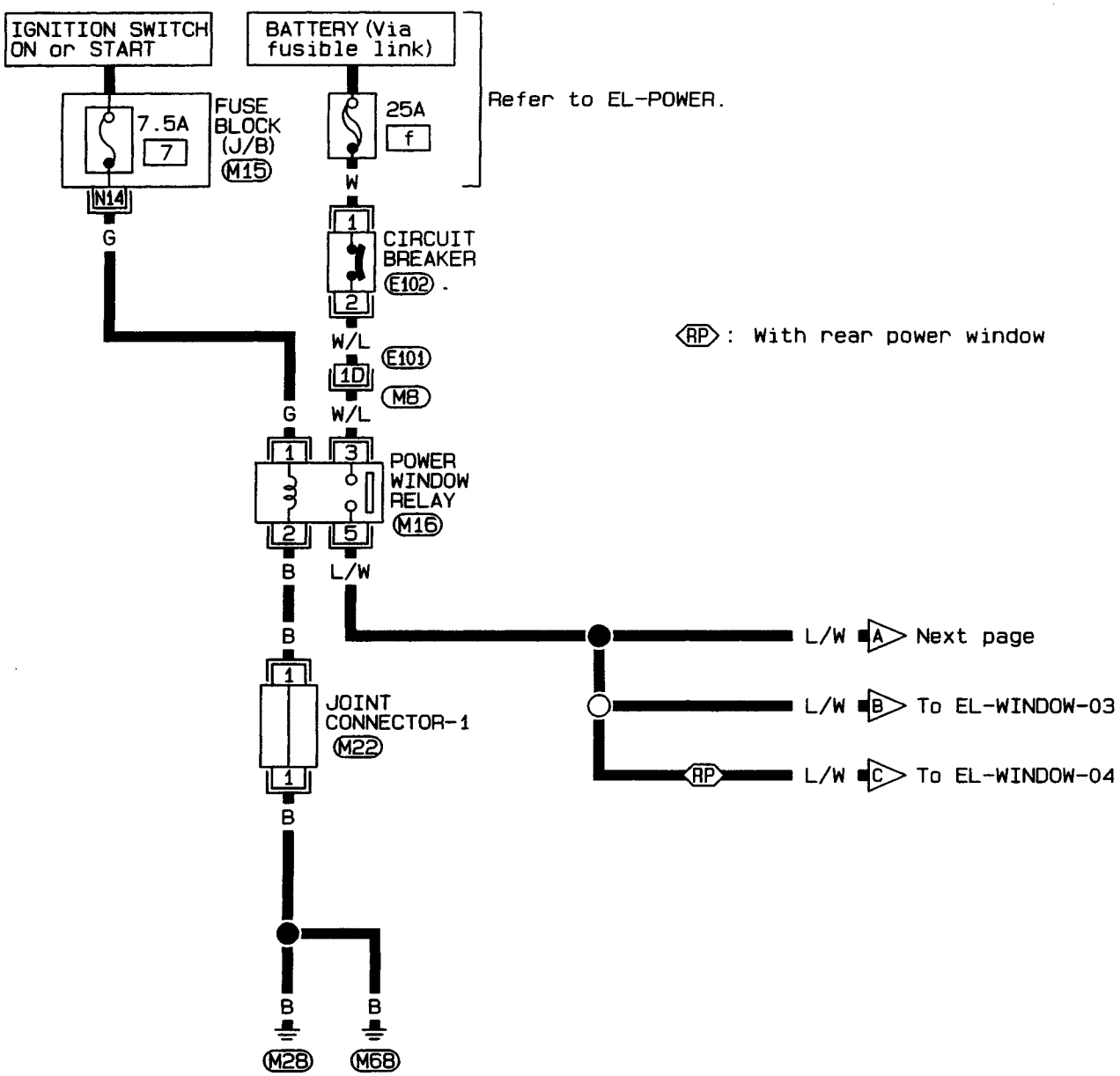

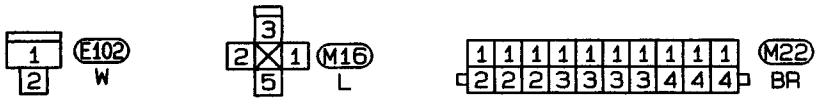

Refer to last page (Foldout page).
M8, E101
M15

HEL099

EL

Simpo PDF Merge and Split Unregistered Version - http://www.simpopdf.com

Wiring Diagram — WINDOW — (Cont'd)

EL-WINDOW-02

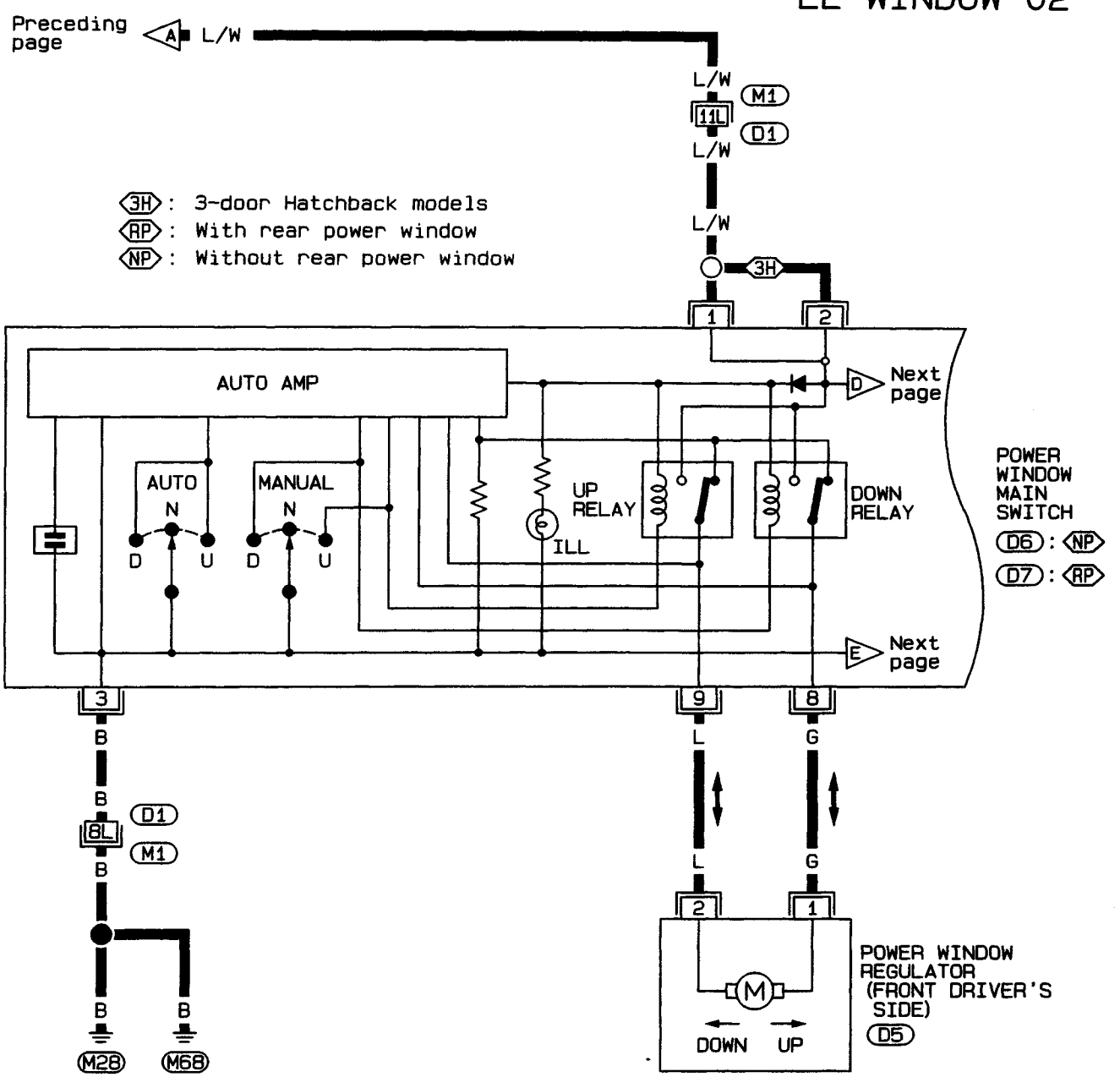

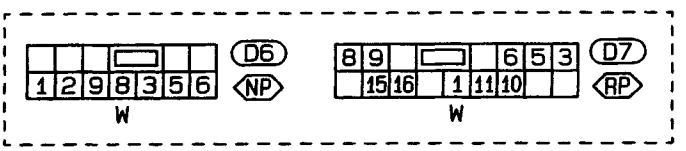

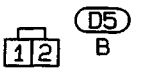

Refer to last page (Foldout page).

M1, D1

CAUTION : Don't attempt to repair, splice or modify the flexible flat circuit (FFC). If the FFC is damaged, replace with a new one.

HEL100

Simpo PDF Merge and Split Unregistered Version - http://www.simpopdf.com

Wiring Diagram — WINDOW — (Cont'd)

EL-WINDOW-03

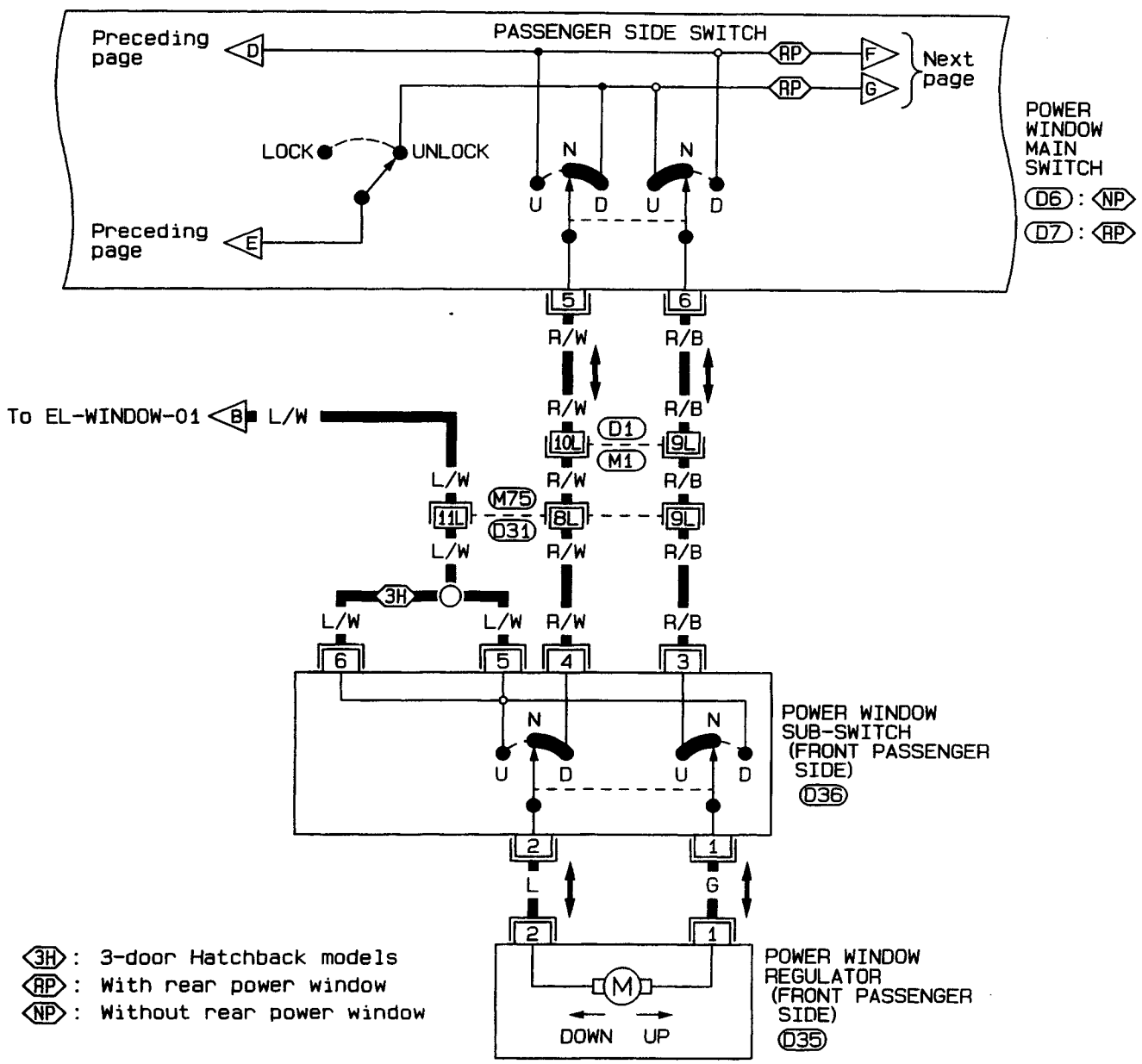

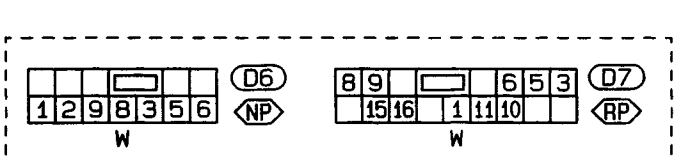



CAUTION : Don't attempt to repair, splice or modify the flexible flat circuit (FFC). If the FFC is damaged, replace with a new one.

Refer to last page (Foldout page).
M1, D1
M75, D31

EL

HEL101

Simpo PDF Merge and Split Unregistered Version - http://www.simpopdf.com

Wiring Diagram — WINDOW — (Cont'd)

EL-WINDOW-04

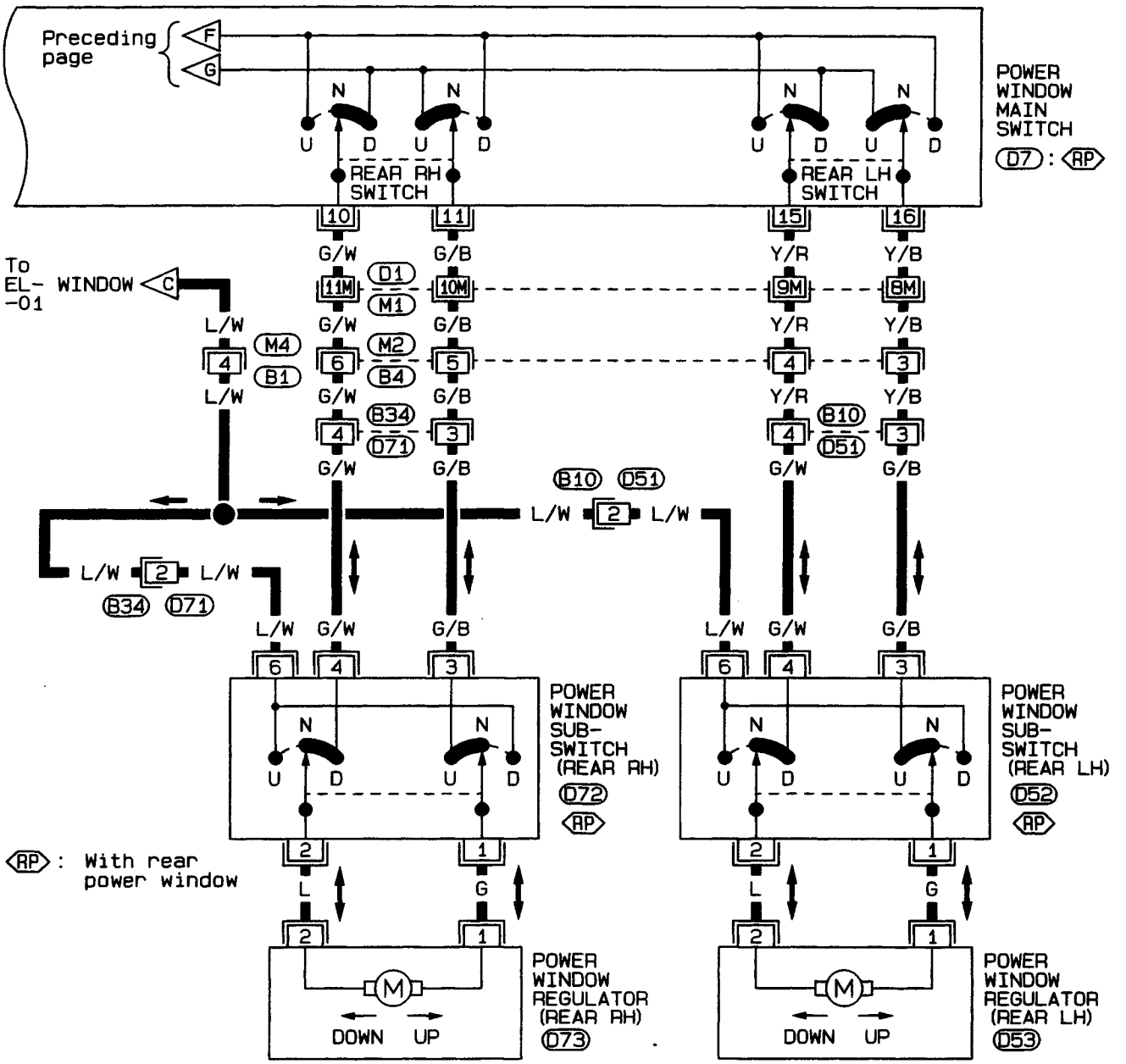

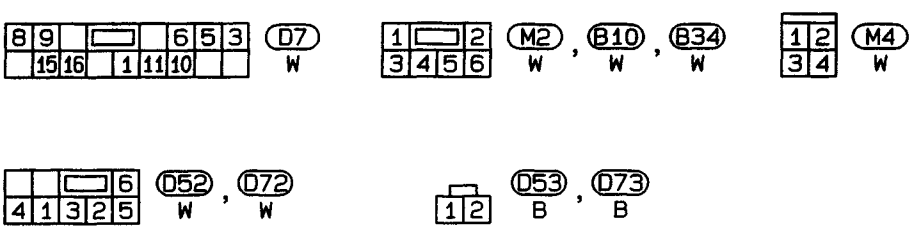

Refer to last page (Foldout page).

M1 , D1

Simpo PDF Merge and Split Unregistered Version - http://www.simpopdf.com

Wiring Diagram — WINDOW — (Cont'd)

RHD MODELS EXCEPT FOR EUROPE AND AUSTRALIA

EL-WINDOW-05

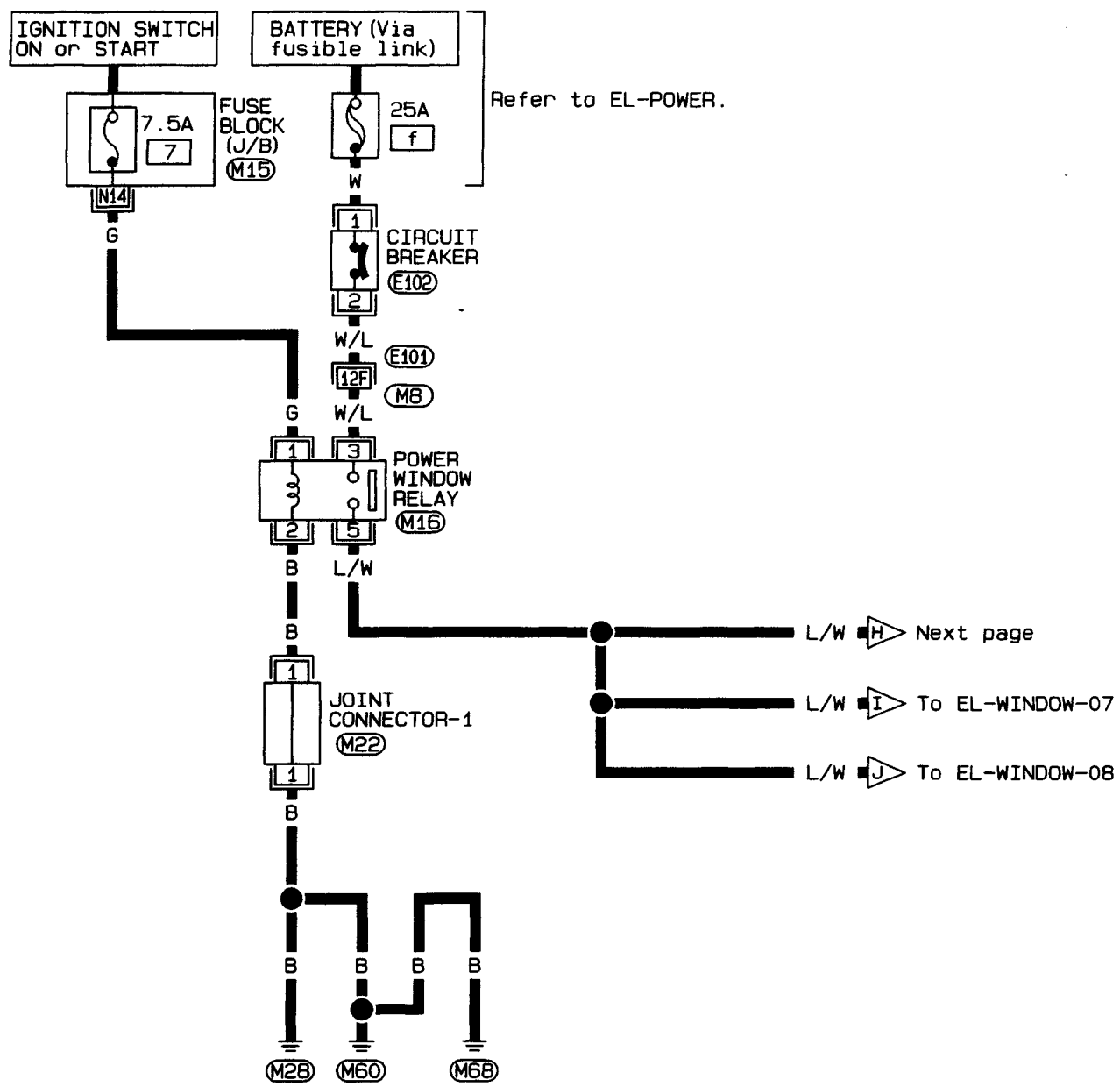

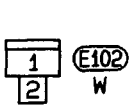

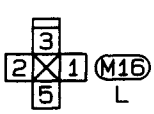

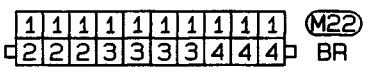

Refer to last page (Foldout page).

M8, E101
M15

EL

HEL103

Simpo PDF Merge and Split Unregistered Version - http://www.simpopdf.com

Wiring Diagram — WINDOW — (Cont'd)

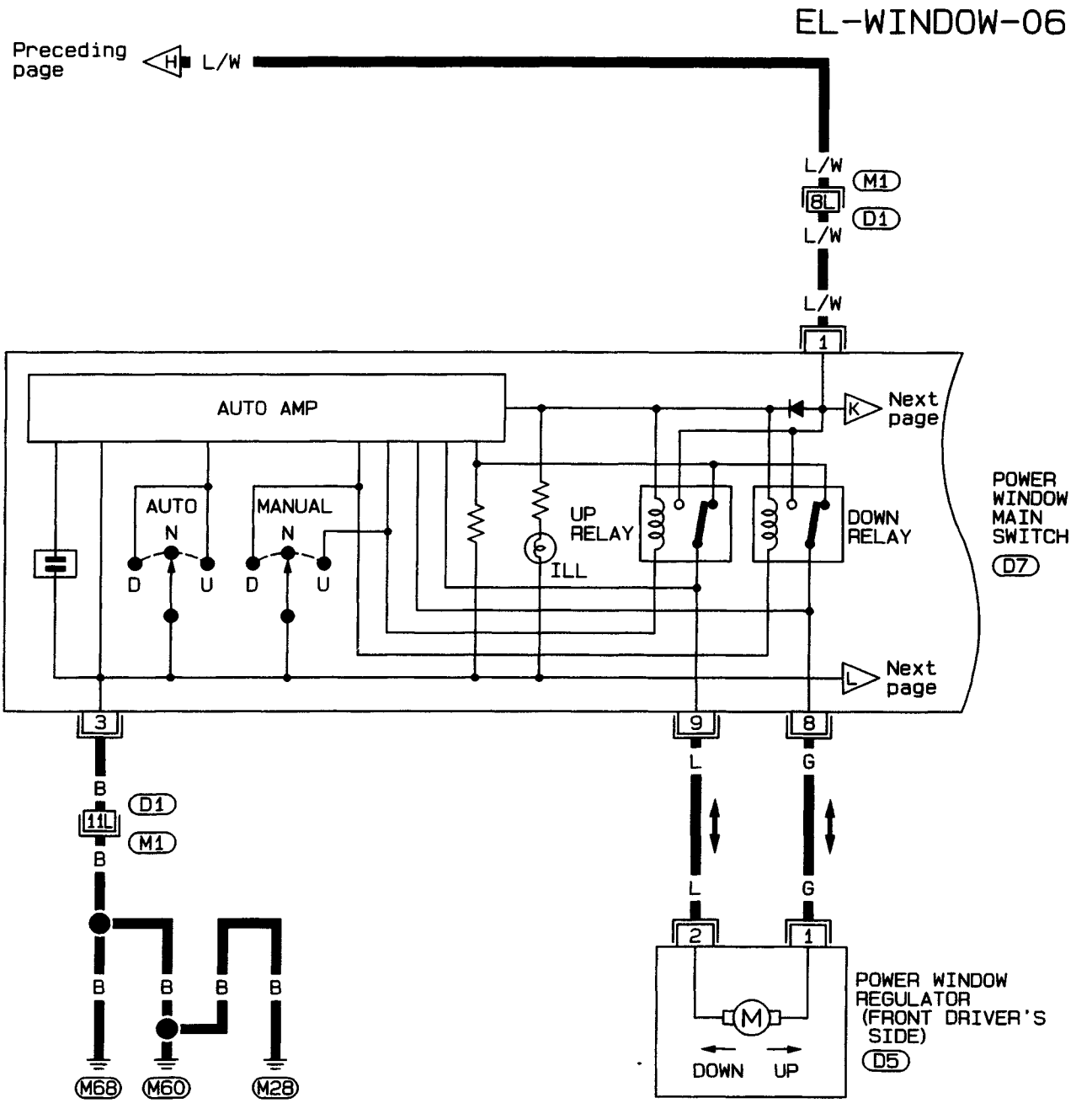

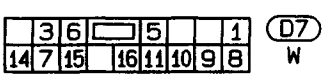

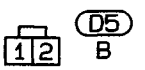

Refer to last page (Foldout page).
M1, D1

HEL104

Simpo PDF Merge and Split Unregistered Version - http://www.simpopdf.com

Wiring Diagram — WINDOW — (Cont'd)

EL-WINDOW-07

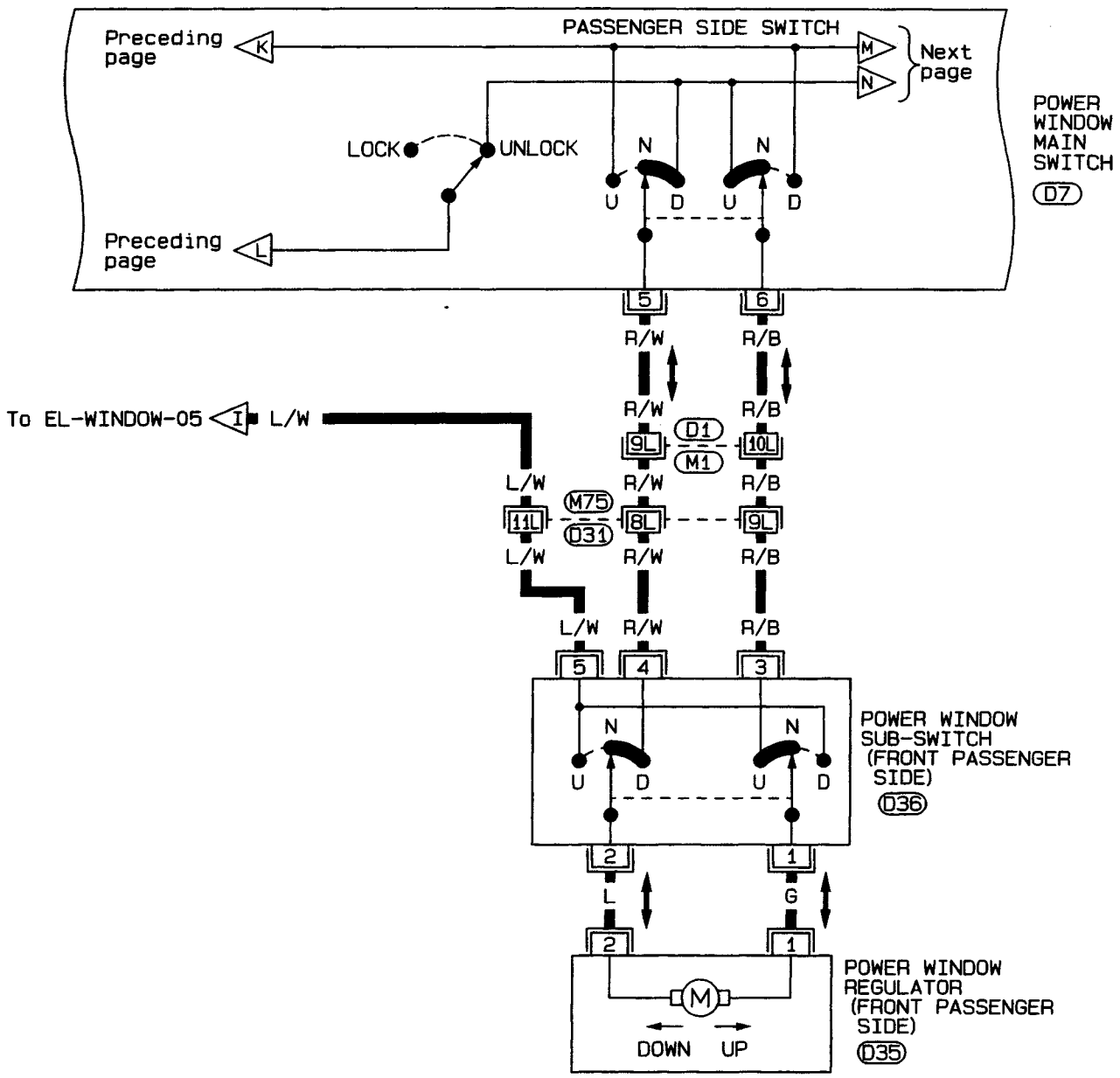

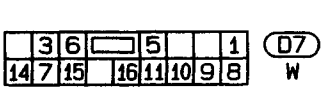

D7
W

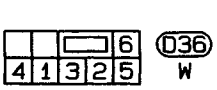

D36
W



D35
B

Refer to last page (Foldout page).

M1, D1

M75, D31

EL

HEL105

Simpo PDF Merge and Split Unregistered Version - http://www.simpopdf.com

Wiring Diagram — WINDOW — (Cont'd)

EL-WINDOW-08

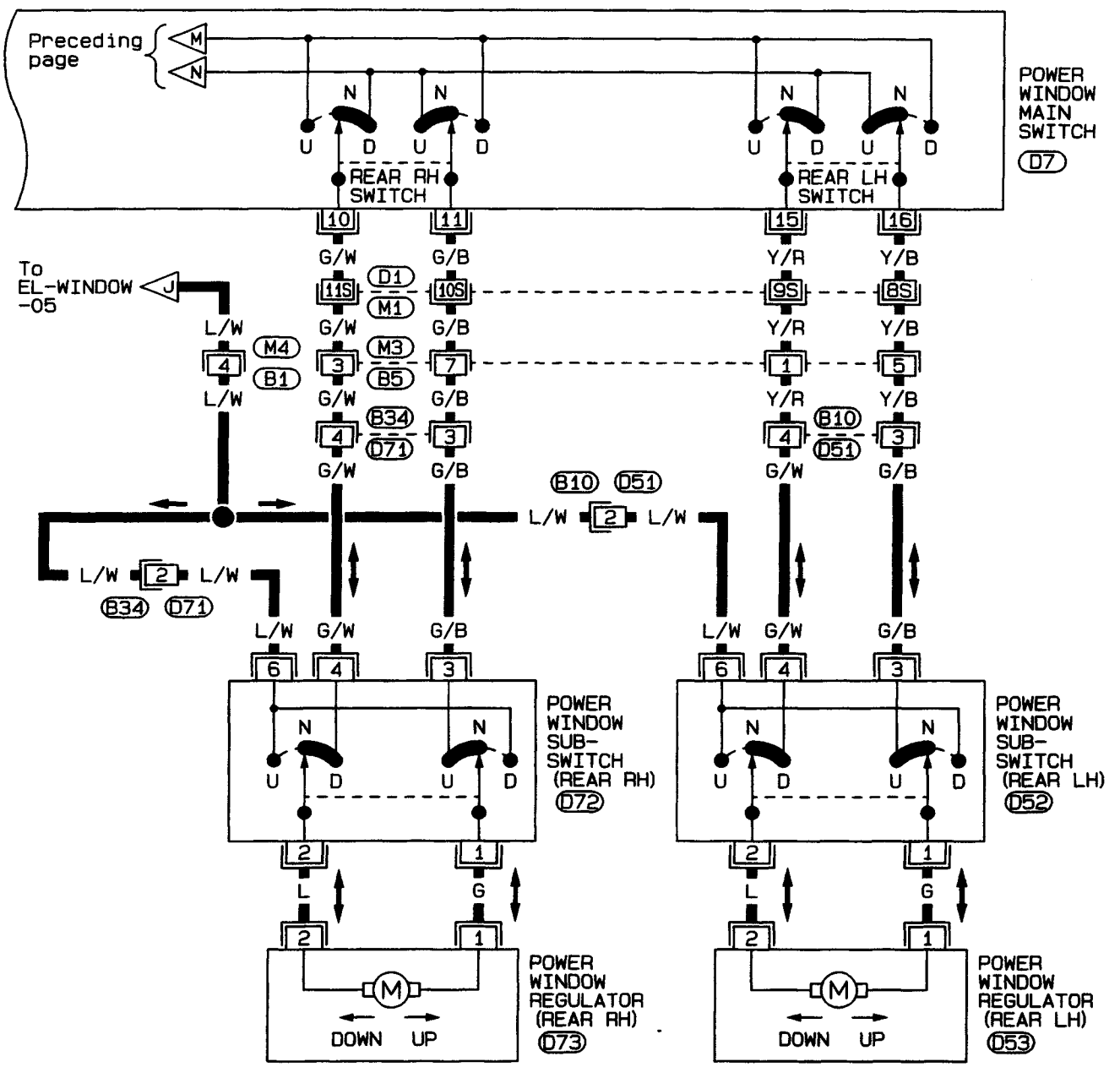

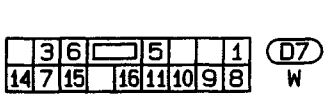

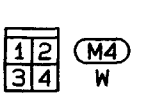

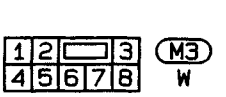

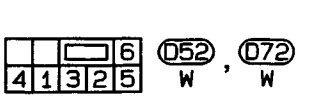

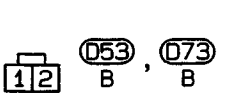

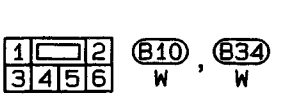

Refer to last page (Foldout page).

M1, D1

HEL106

Simpo PDF Merge and Split Unregistered Version - http://www.simpopdf.com

Wiring Diagram — WINDOW — (Cont'd)

RHD MODELS FOR EUROPE AND AUSTRALIA

EL-WINDOW-09

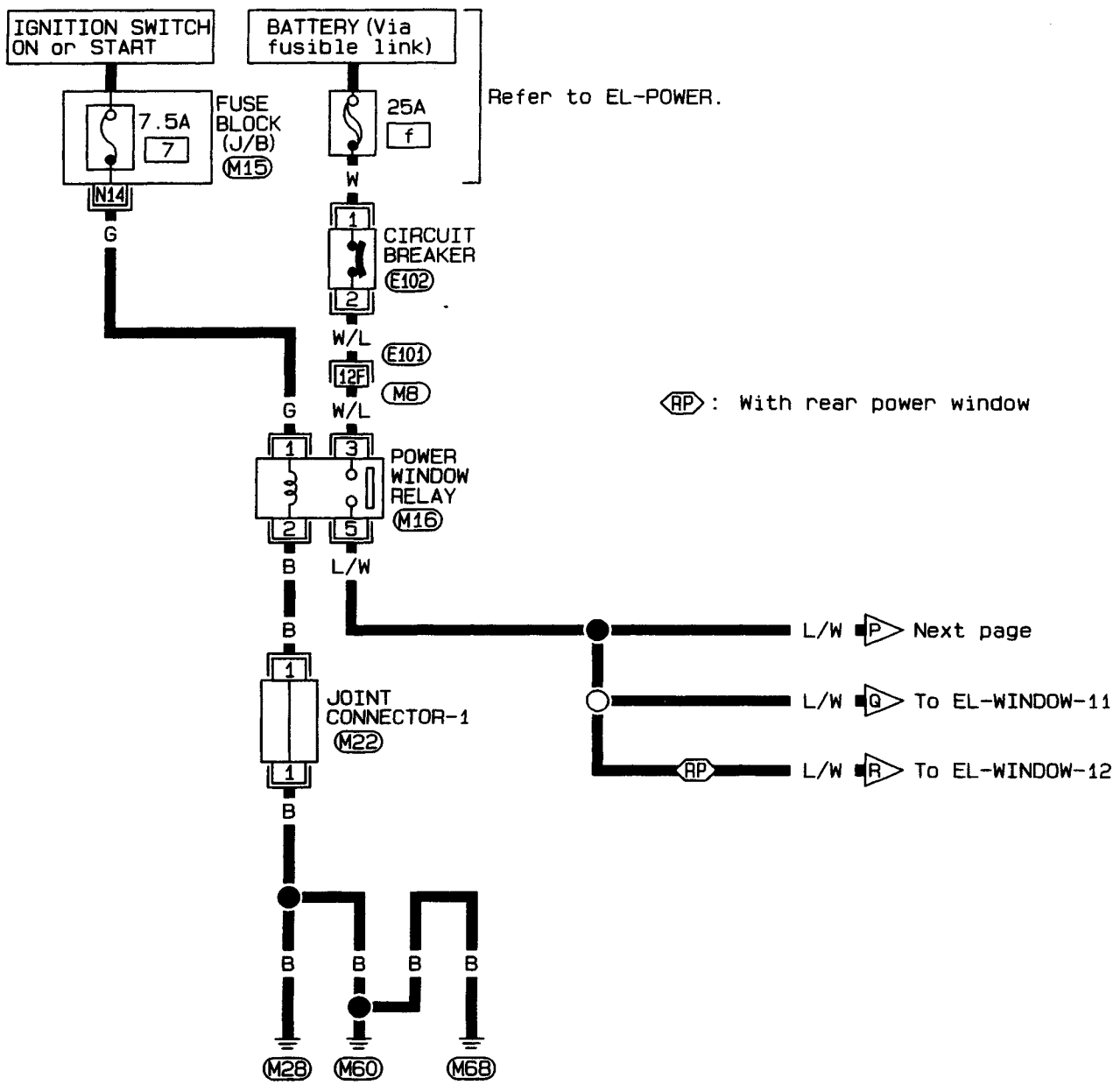

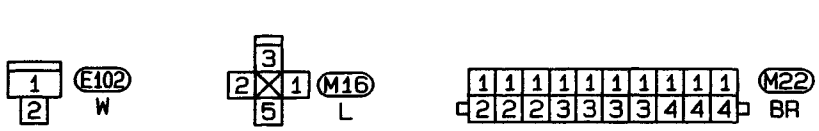

Refer to last page (Foldout page).

M8, E101
M15

EL

HEL107

Simpo PDF Merge and Split Unregistered Version - http://www.simpopdf.com

Wiring Diagram — WINDOW — (Cont'd)

EL-WINDOW-10

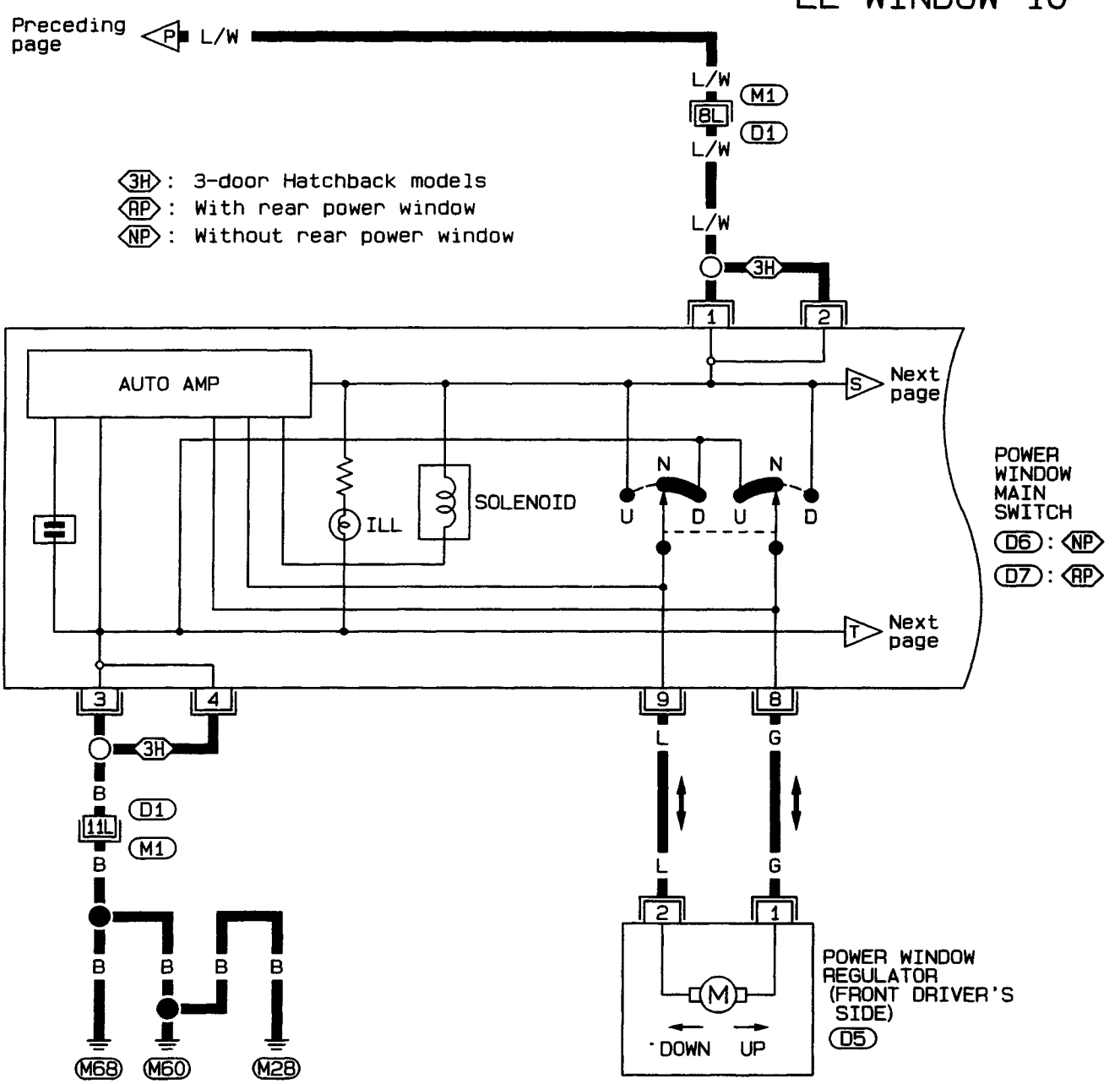

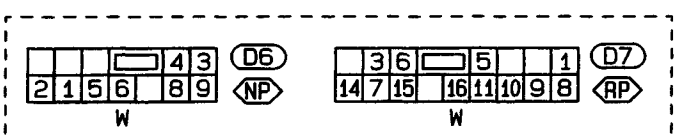

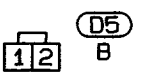

Refer to last page (Foldout page).

M1, D1

CAUTION : Don't attempt to repair, splice or modify the flexible flat circuit (FFC). If the FFC is damaged, replace with a new one.

HEL108

Simpo PDF Merge and Split Unregistered Version - http://www.simpopdf.com

Wiring Diagram — WINDOW — (Cont'd)

EL-WINDOW-11

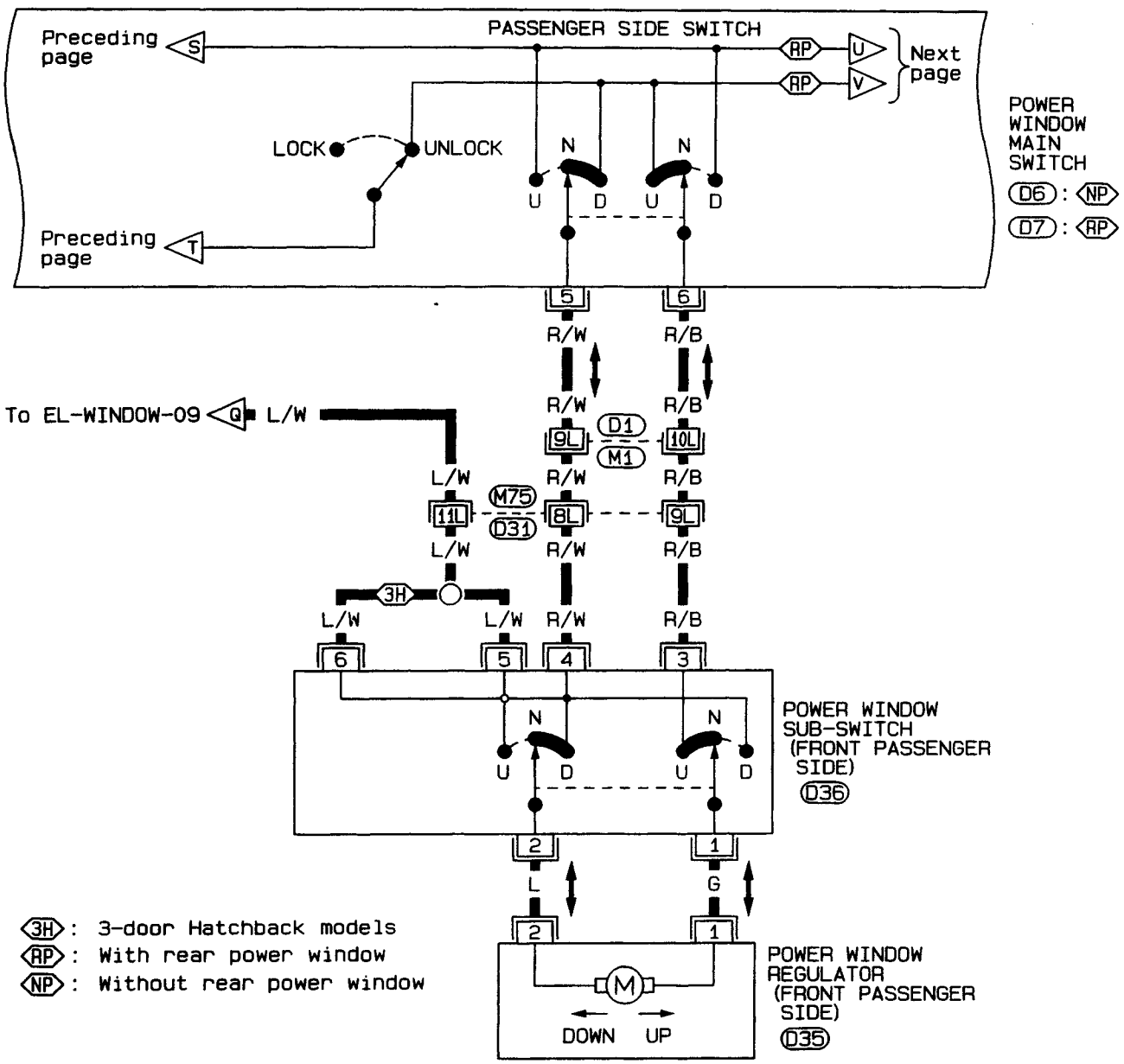

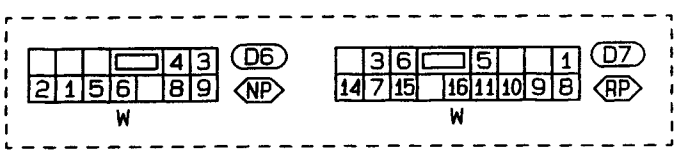

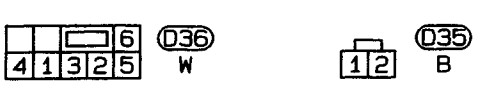

CAUTION : Don't attempt to repair, splice or modify the flexible flat circuit (FFC). If the FFC is damaged, replace with a new one.

Refer to last page (Foldout page).

M1, D1

M75, D31

EL

Simpo PDF Merge and Split Unregistered Version - http://www.simpopdf.com

Wiring Diagram — WINDOW — (Cont'd)

EL-WINDOW-12

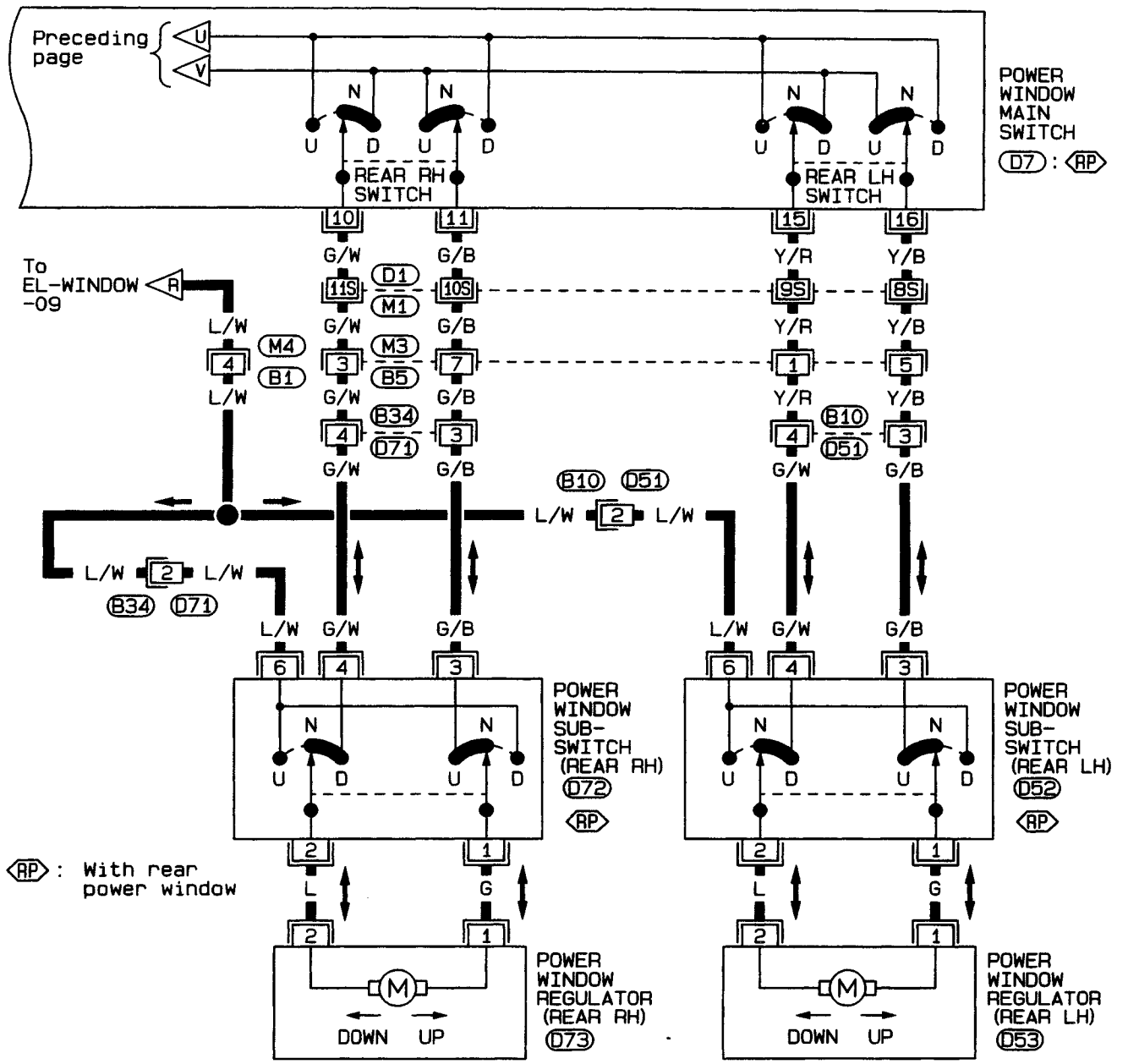

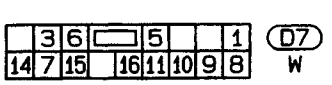



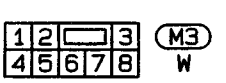

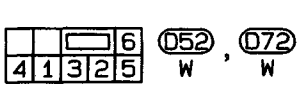

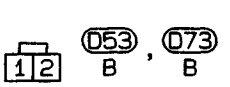

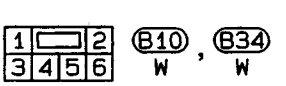

Refer to last page (Foldout page).

M1 , D1

HEL110

Simpo PDF Merge and Split Unregistered Version - http://www.simpopdf.com

Trouble Diagnoses

<table>
<tr><th>Symptom</th><th>Possible cause</th><th>Repair order</th></tr>
<tr><td>None of the power windows can be operated using any switch.</td><td>1. 7.5A fuse, 25A fusible link and (E102) circuit breaker

2. Grounds (M28), (M60) and (M68)
3. Power window relay
4. Open/short in power window main switch circuit</td><td>1. Check 7.5A fuse (No. 7, located in fuse block [J/B]), 25A fusible link (letter f, located in fuse and fusible link box) and (E102) circuit breaker. Turn ignition switch "ON" and verify battery positive voltage is present at terminals ① and ② of power window main switch, and other switches as follows.
<table>
<tr><th>Models
Location of sub-switch</th><th>Terminals
LHD models</th><th>RHD models except for Europe and Australia</th><th>RHD models for Europe and Australia</th></tr>
<tr><td>Passenger 3H*</td><td>⑤ and ⑥</td><td>—</td><td>⑤ and ⑥</td></tr>
<tr><td>Other</td><td>⑤</td><td>⑤</td><td>⑤</td></tr>
<tr><td>Rear RH</td><td>⑥</td><td>⑥</td><td>⑥</td></tr>
<tr><td>Rear LH</td><td>⑥</td><td>⑥</td><td>⑥</td></tr>
</table>
2. Check grounds (M28), (M60) and (M68).
3. Check power window relay.
4. Check L/W wire between power window relay and power window main switch for open/short circuit.</td></tr>
<tr><td>Driver's side power window cannot be operated but other windows can be operated.</td><td>1. Driver's side power window regulator circuit
2. Driver's side power window regulator</td><td>1. Check driver's side power window regulator circuit

2. Check driver's side power window regulator</td></tr>
<tr><td>One or more passenger power windows cannot be operated.</td><td>1. Power window switches (front sub-switch, rear sub-switch RH, rear sub-switch LH)
2. Power window regulators (front sub-switch, rear sub-switch RH, rear sub-switch LH)
3. Power window main switch
4. Power window circuit</td><td>1. Check power window switches (front sub-switch, rear sub-switch RH, rear sub-switch LH)

2. Check power window regulators (front sub-switch, rear sub-switch RH, rear sub-switch LH)

3. Check power window main switch
4-1. Check harnesses between power window main switch and power window sub-switches for open/short circuit.
4-2. Check harnesses between power window sub-switches and power window regulators for open/short circuit.</td></tr>
<tr><td>One or more passenger power windows cannot be operated using power window main switch but can be operated by power window sub-switches.</td><td>1. Power window main switch</td><td>1. Check power window main switch.</td></tr>
<tr><td>Driver's side power window auto function cannot be operated using power window main switch.</td><td>1. Power window main switch</td><td>1. Check power window main switch.</td></tr>
</table>

*3-door Hatchback models

EL

Simpo PDF Merge and Split Unregistered Version - http://www.simpopdf.com

System Description

NISSAN model N15 has two types of power door lock system:
- Type 1: For Europe and Australia
- Type 2: Except for Europe and Australia

Power is supplied at all times
- through 25A fusible link (letter [f], located in the fusible link and fuse box)
- to circuit breaker terminal ①
- through circuit breaker terminal ②
- to door lock timer terminal ⑪ (Type-1) or ③ (Type-2).

Ground is supplied to door lock timer terminal ⑯ (Type-1) or ① (Type-2) through body grounds (M28), (M60) and (M68).

POWER DOOR LOCK OPERATION

When one of the following input signals is supplied:
- driver side door is locked/unlocked using key or lock knob,
- passenger side door is locked/unlocked using key or lock knob (Only for type-1);
- door lock & unlock switch in the power window main switch is locked/unlocked (Only for RHD models type-2)

Door lock timer locks/unlocks driver side door (Only for type-1) and other doors.

Input (Type-1)

Unlock signal

When the driver side door is unlocked using key or lock knob, ground is supplied
- to door lock timer terminal ④
- through driver side door lock actuator (door unlock sensor) terminal ④
- to driver side door lock actuator (door unlock sensor) terminal ②
- through body grounds (M28), (M60) and (M68).

When the passenger side door is unlocked using key or lock knob, ground is supplied
- to door lock timer terminal ⑤
- through passenger side door lock actuator (door unlock sensor) terminal ④
- to passenger side door lock actuator (door unlock sensor) terminal ②
- through body grounds (M28), (M60) and (M68).

Lock signal

The door lock timer terminal ④ or ⑤ receives lock signal when the unlock signal is shut off.

Input (Type-2)

When the lock knob switch is in UNLOCKED position, ground is supplied
- to door lock timer terminal ⑥
- through lock knob switch terminal ②
- to lock knob switch terminal ①
- through body grounds (M28), (M60) and (M68).

The door lock timer terminal ⑥ receives lock signal when the unlock signal is shut off.

Input (Only for RHD models type-2)

When the door lock & unlock switch in the power window main switch is in LOCKED position, ground is supplied
- to door lock timer terminal ⑤
- through door lock & unlock switch in the power window main switch terminal ⑭
- to door lock & unlock switch in the power window main switch terminal ③
- through body grounds (M28), (M60) and (M68).

When the door lock & unlock switch in the power window main switch is in UNLOCKED position, ground is supplied
- to door lock timer terminal ⑧
- through door lock & unlock switch in the power window main switch terminal ⑦
- to door lock & unlock switch in the power window main switch terminal ③
- through body grounds (M28), (M60) and (M68).

Simpo PDF Merge and Split Unregistered Version - http://www.simpopdf.com

System Description (Cont'd)

Output (Type-1)

Unlock signal

Ground is supplied
- to each door lock actuator terminal ③
- through door lock timer terminal ⑮.

Power is supplied
- to each door lock actuator terminal ①
- through door lock timer terminal ⑭.

Then, the door is unlocked.

Lock signal

Ground is supplied
- to each door lock actuator terminal ①
- through door lock timer terminal ⑭.

Power is supplied
- to each door lock actuator terminal ③.
- through door lock timer terminal ⑮.

Then, the door is locked.

Output (Type-2)

Unlock signal

Ground is supplied
- to each door lock actuator terminal ①
- through door lock timer terminal ②.

Power is supplied
- to each door lock actuator terminal ③
- through door lock timer terminal ④.

Then, the door is unlocked.

Lock signal

Ground is supplied
- to each door lock actuator terminal ③
- through door lock timer terminal ④.

Power is supplied
- to each door lock actuator terminal ①
- through door lock timer terminal ②.

Then, the door is locked.

Simpo PDF Merge and Split Unregistered Version - http://www.simpopdf.com

Schematic

TYPE-1 (For Europe and Australia)

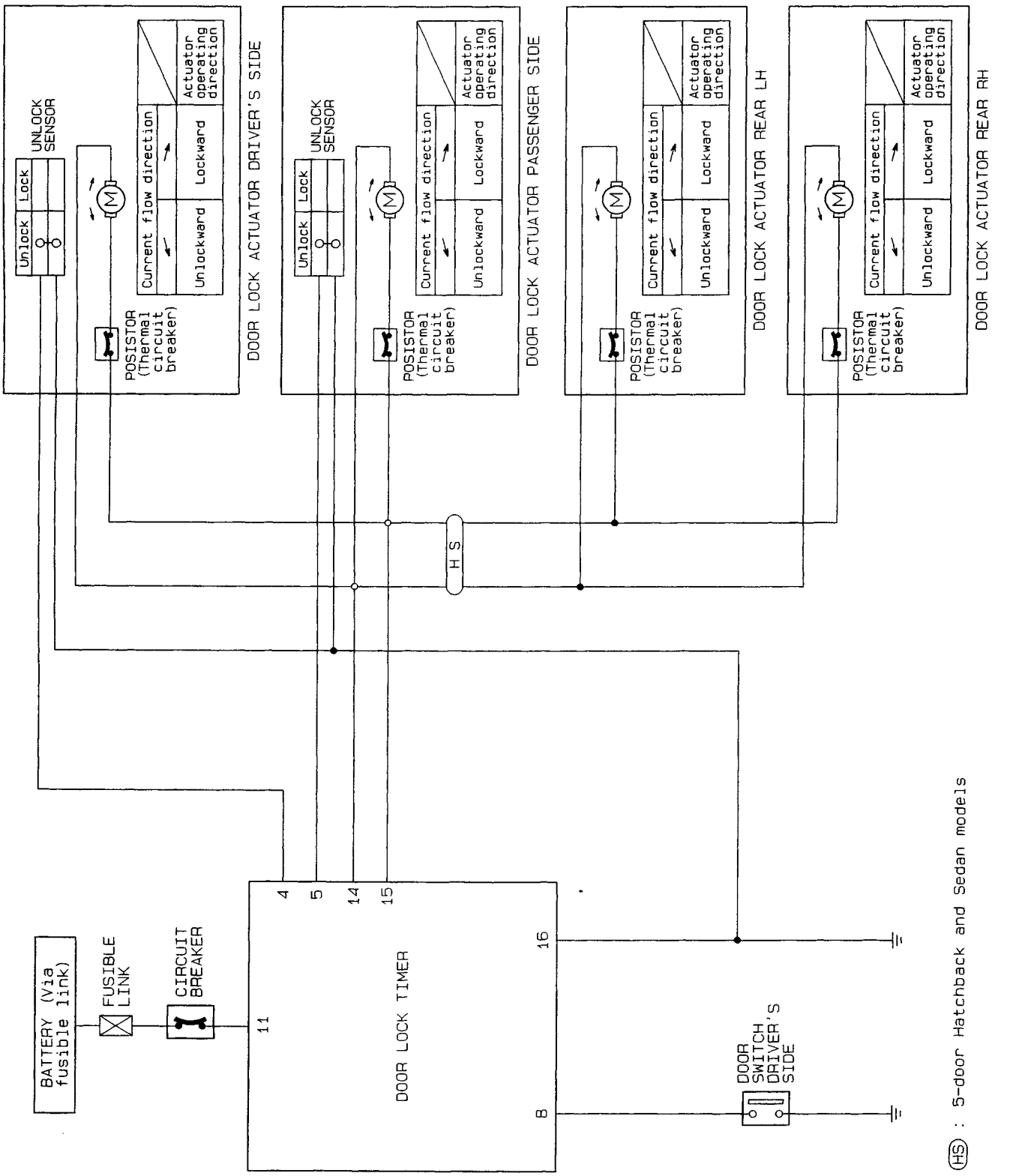

HEL114

Simpo PDF Merge and Split Unregistered Version - http://www.simpopdf.com

Schematic (Cont'd)

TYPE-2 (Except for Europe and Australia)

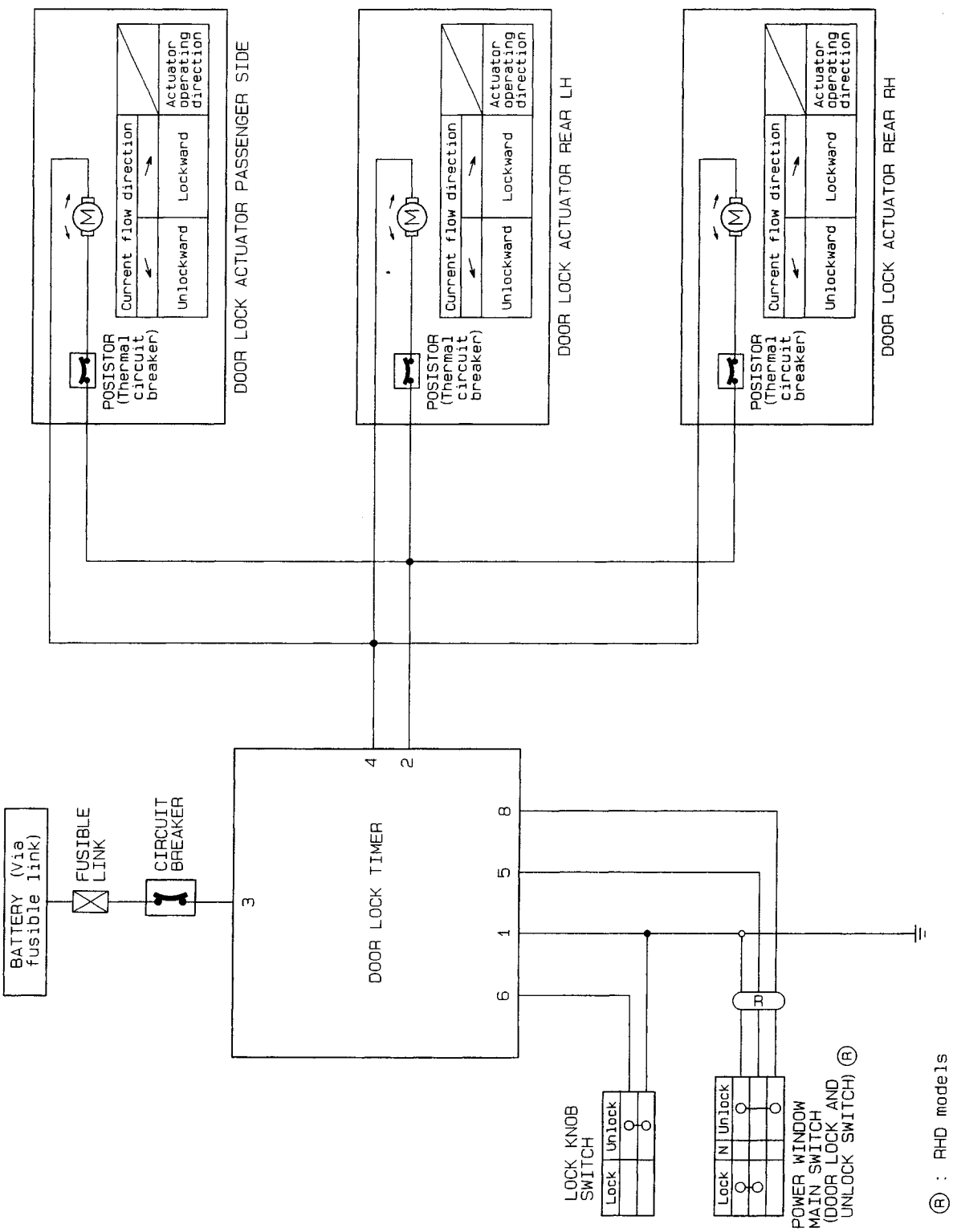

HEL115

Simpo PDF Merge and Split Unregistered Version - http://www.simpopdf.com

Wiring Diagram — D/LOCK —

TYPE-1 (LHD models for Europe)

EL-D/LOCK-01

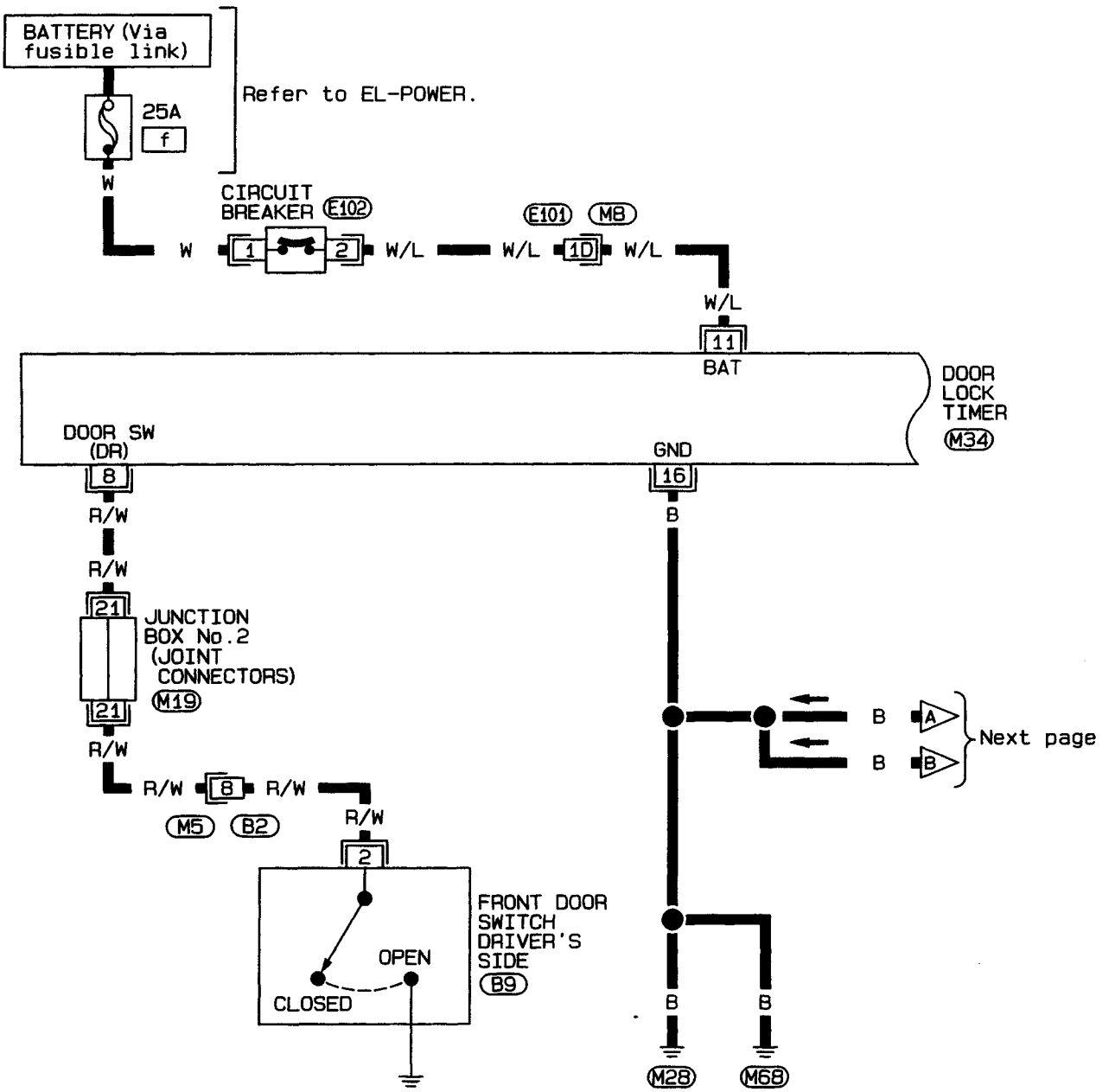



Refer to last page (Foldout page).

M8, E101

M19

HEL116

Simpo PDF Merge and Split Unregistered Version - http://www.simpopdf.com

Wiring Diagram — D/LOCK — (Cont'd)

EL-D/LOCK-02

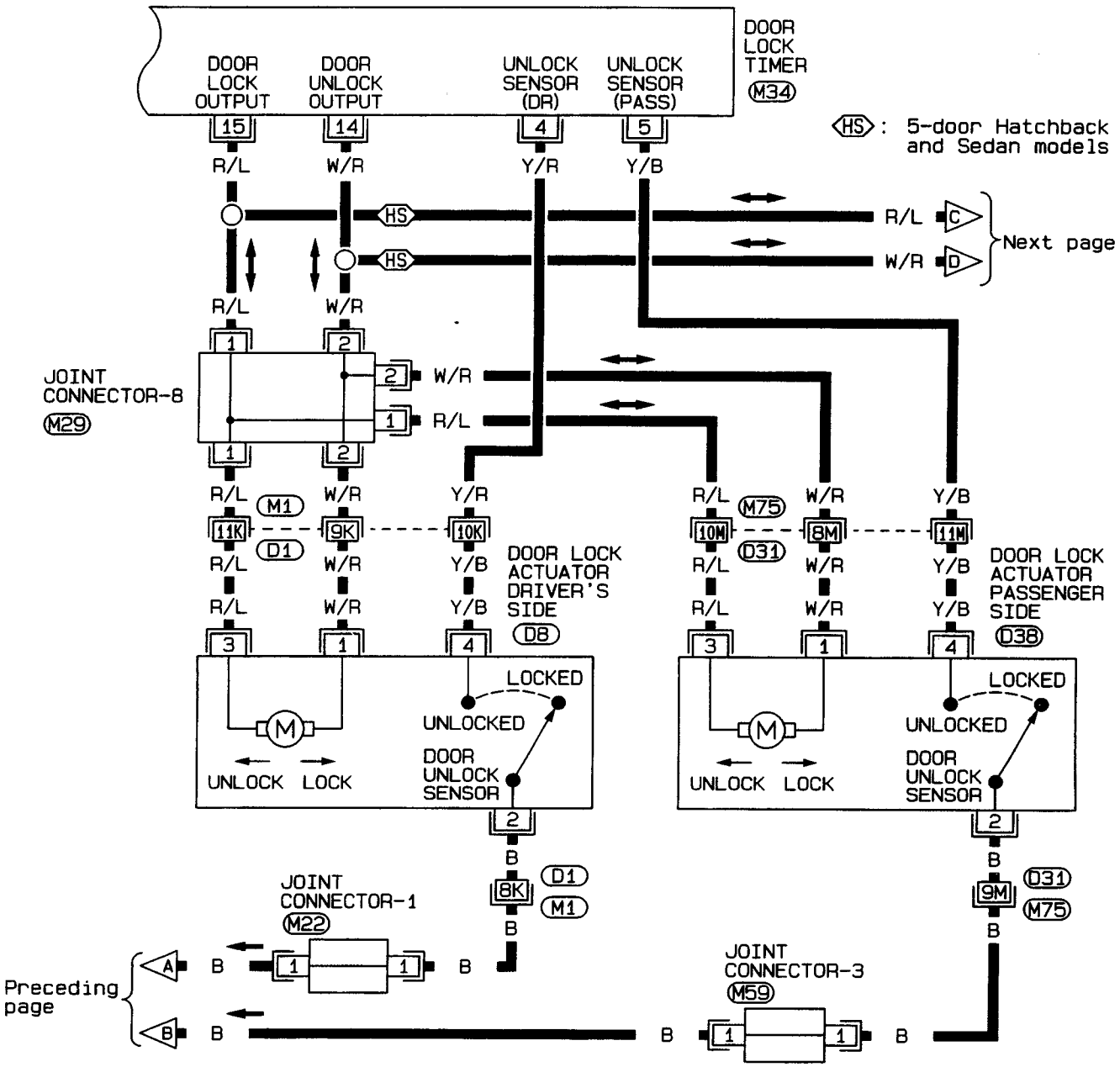

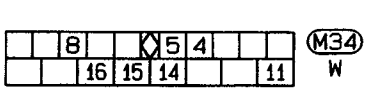

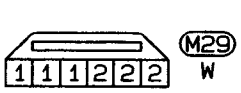

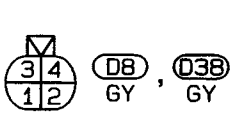

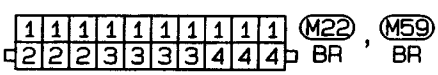

CAUTION : Don't attempt to repair, splice or modify the flexible flat circuit (FFC). If the FFC is damaged, replace with a new one.

Refer to last page (Foldout page).

M1 , D1

M75 , D31

EL

HEL117

Simpo PDF Merge and Split Unregistered Version - http://www.simpopdf.com

Wiring Diagram — D/LOCK — (Cont'd)

EL-D/LOCK-03

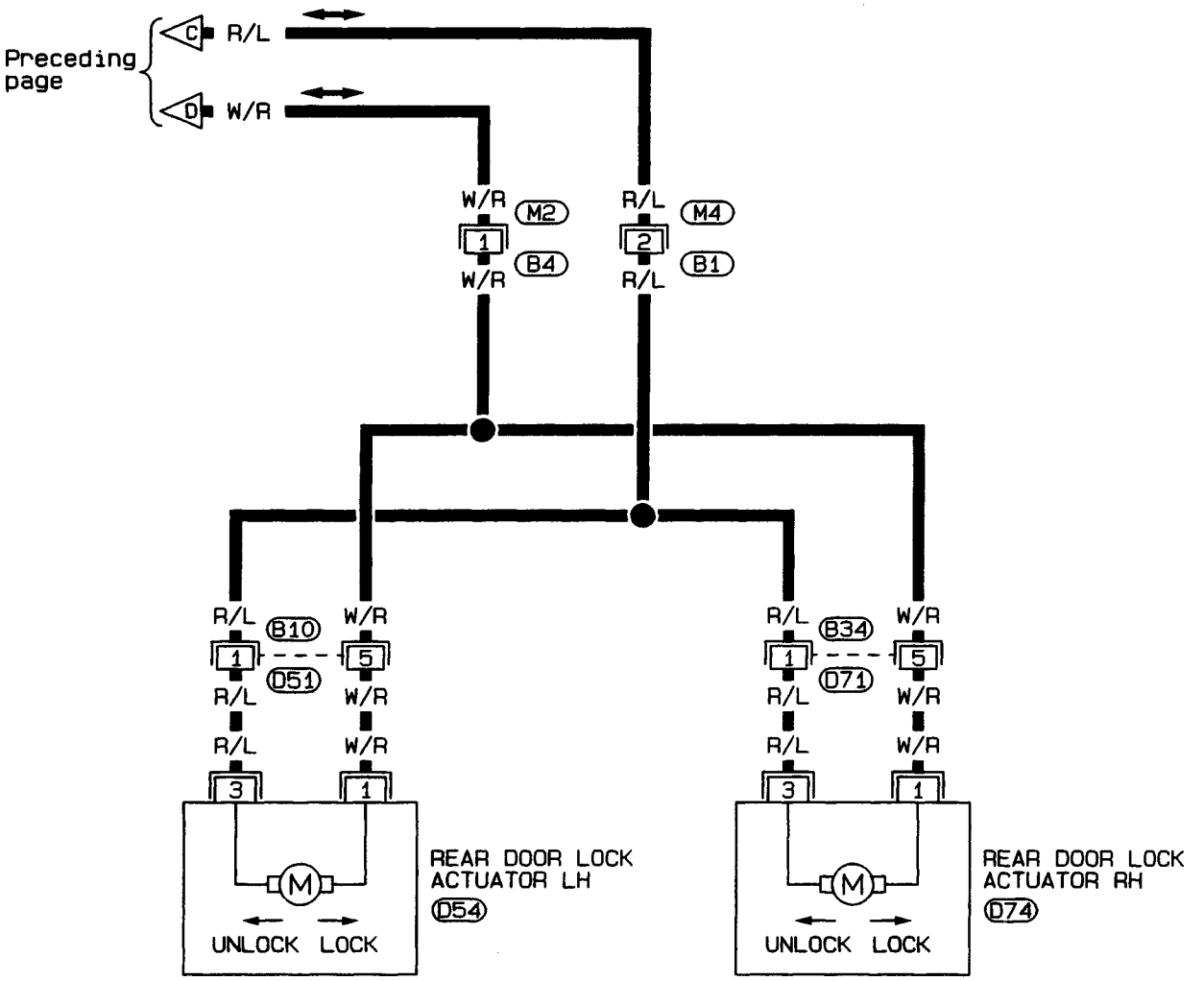

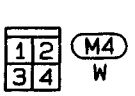

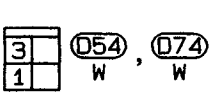

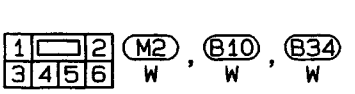

HEL118

Simpo PDF Merge and Split Unregistered Version - http://www.simpopdf.com

Wiring Diagram — D/LOCK — (Cont'd)

TYPE-1 (RHD models for Europe and Australia)

EL-D/LOCK-04

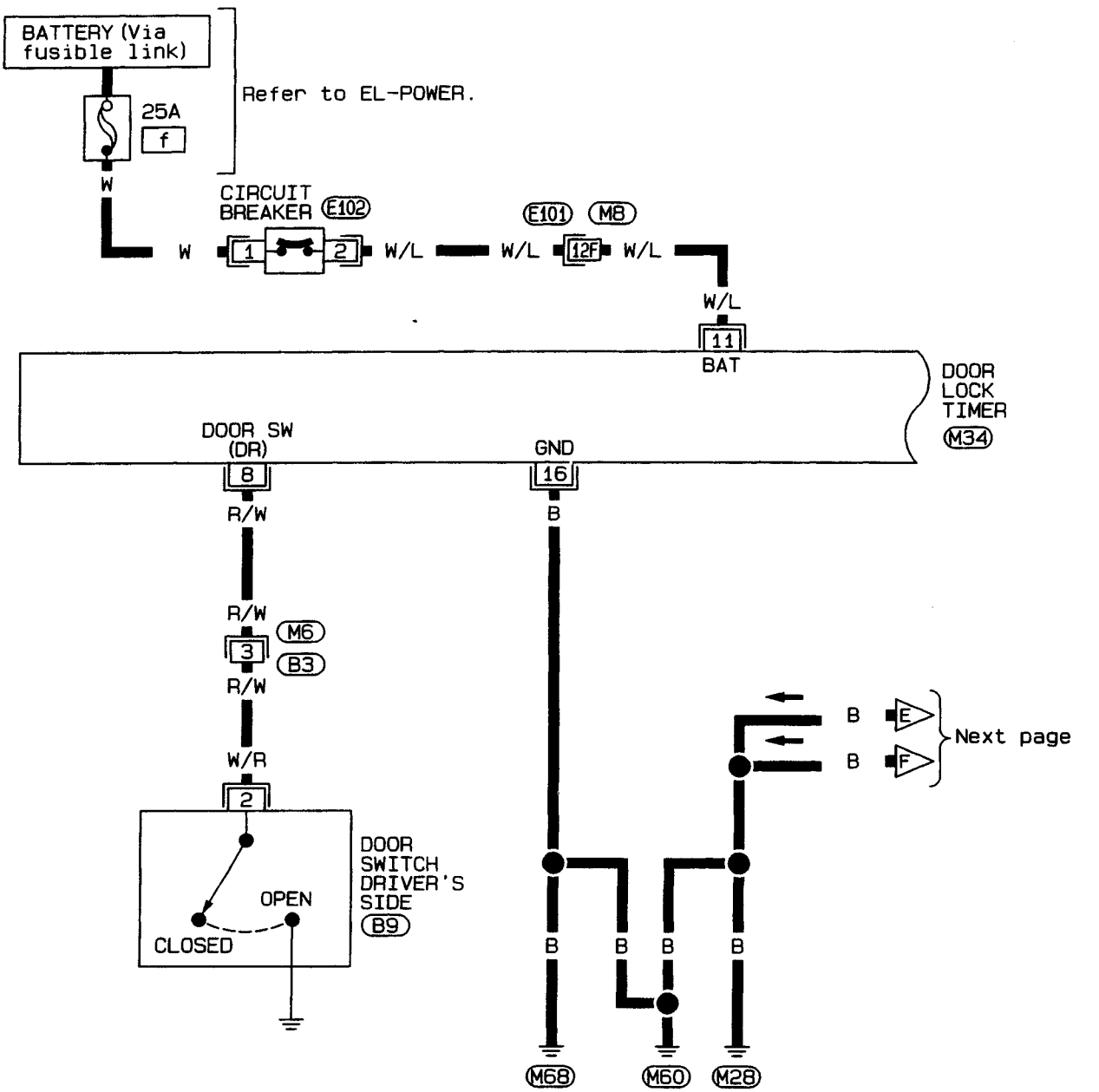

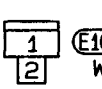

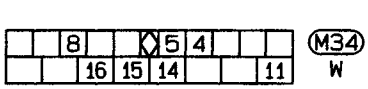

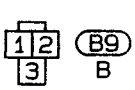

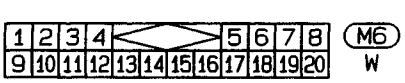

Refer to last page (Foldout page).

M8, E101

EL

HEL119

Simpo PDF Merge and Split Unregistered Version - http://www.simpopdf.com

Wiring Diagram — D/LOCK — (Cont'd)

EL-D/LOCK-05

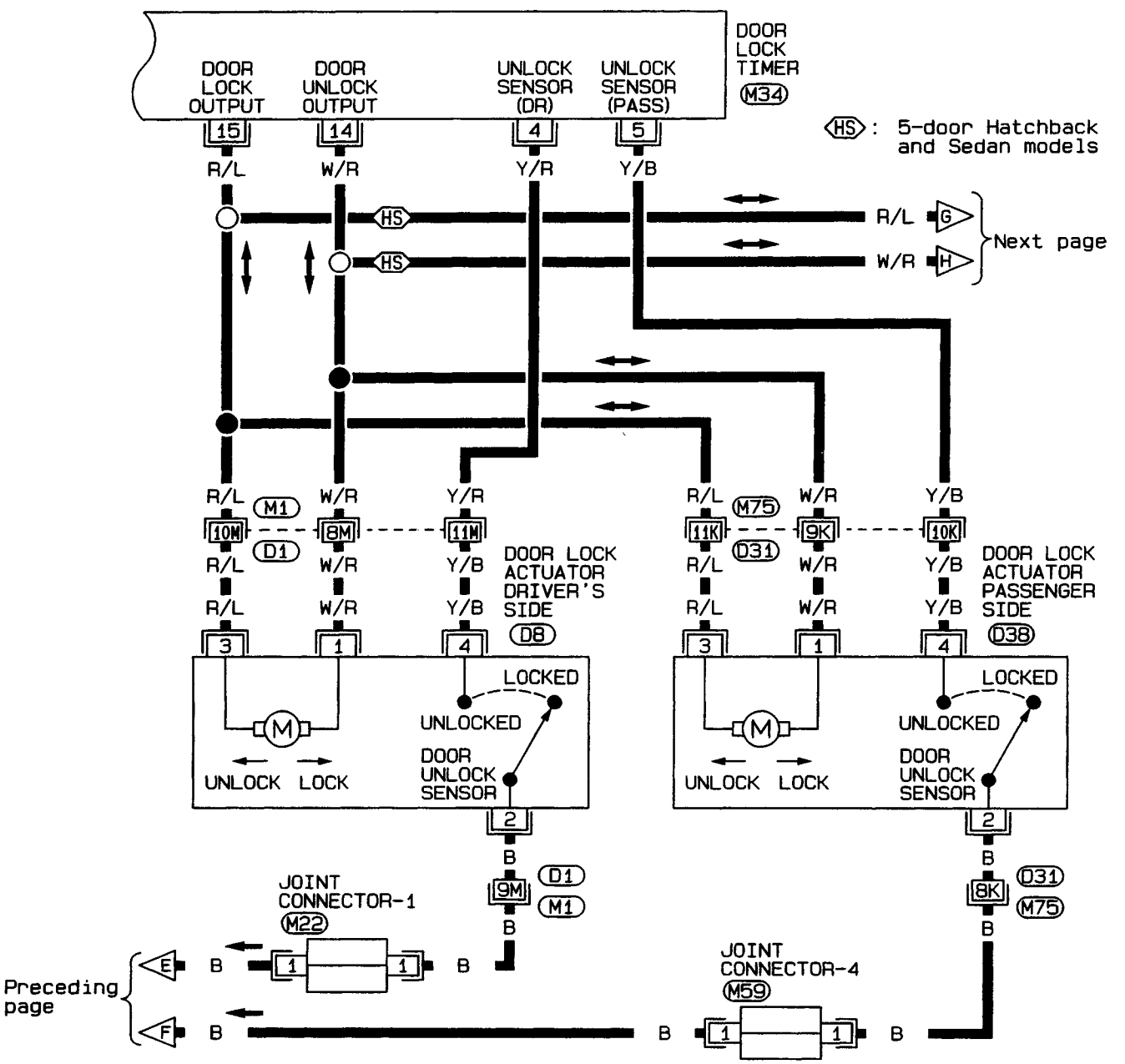

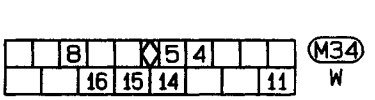



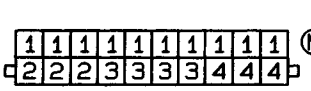

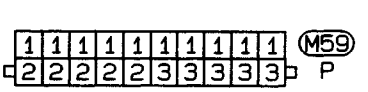

CAUTION : Don't attempt to repair, splice or modify the flexible flat circuit (FFC). If the FFC is damaged, replace with a new one.

Refer to last page (Foldout page).

M1 , D1

M75 , D31

HEL120

Simpo PDF Merge and Split Unregistered Version - http://www.simpopdf.com

Wiring Diagram — D/LOCK — (Cont'd)

EL-D/LOCK-06

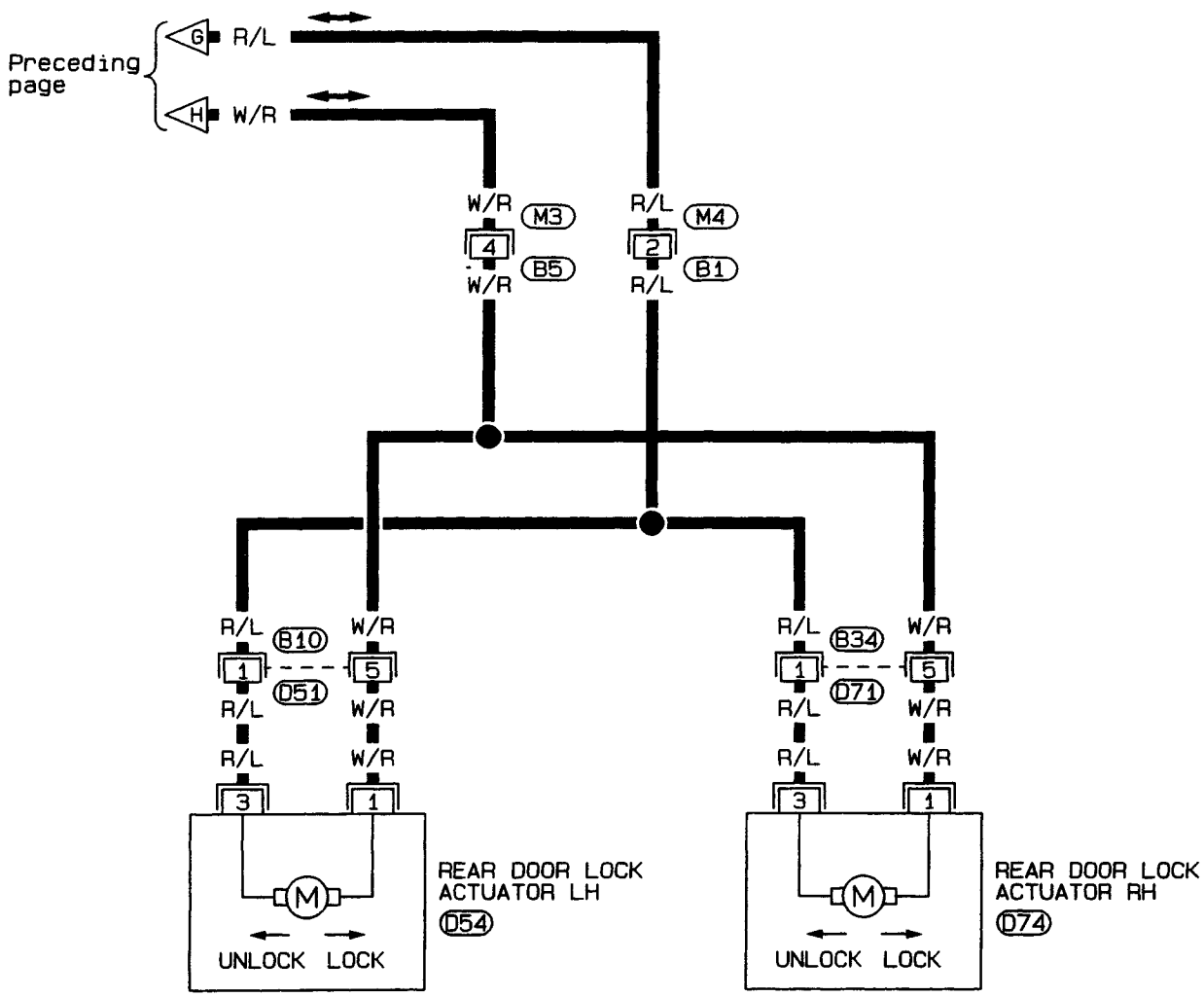

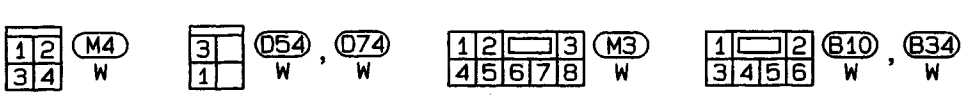

EL

HEL121

Simpo PDF Merge and Split Unregistered Version - http://www.simpopdf.com

Wiring Diagram — D/LOCK — (Cont'd)

TYPE-2 (LHD models except for Europe)

EL-D/LOCK-07

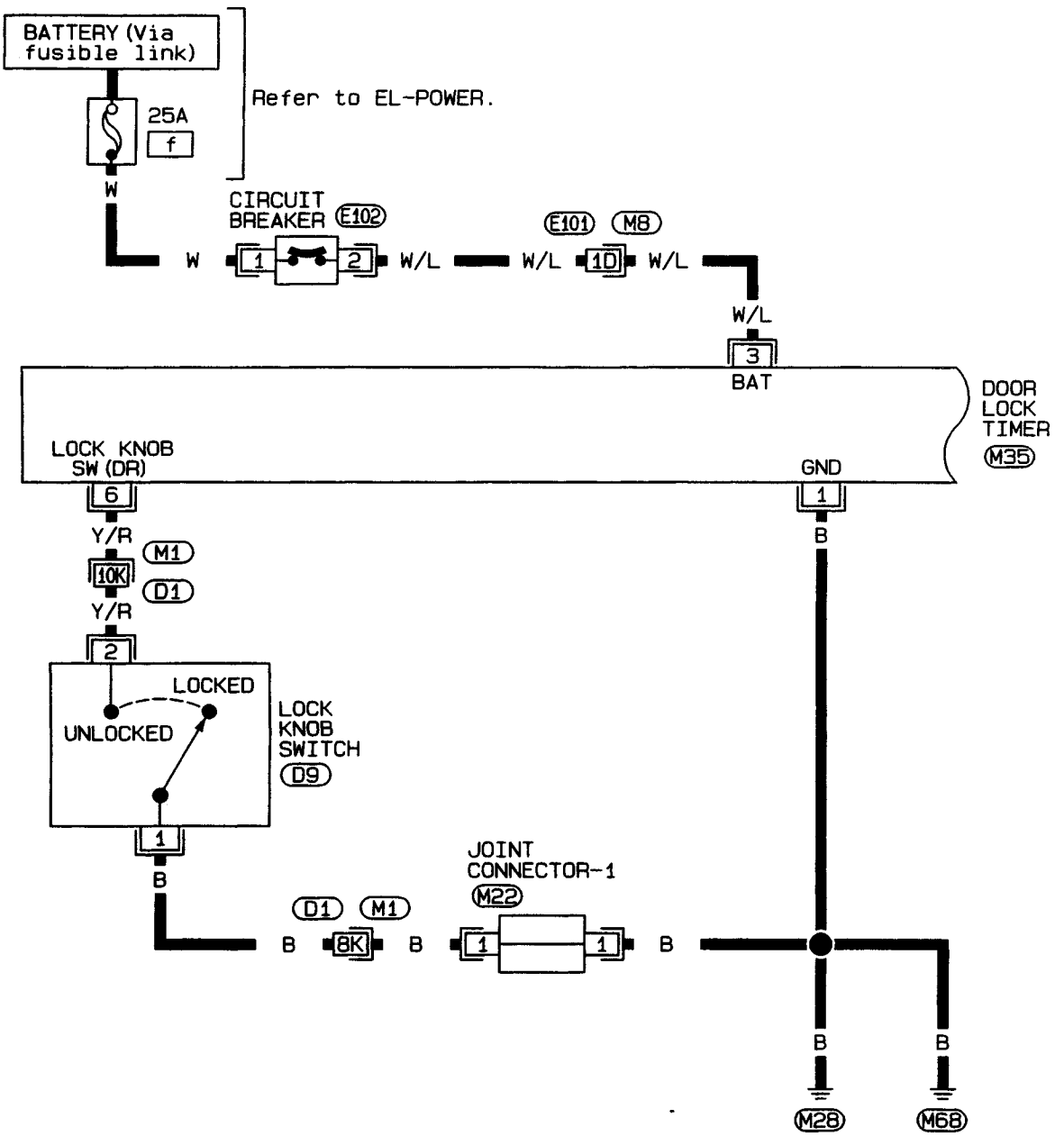

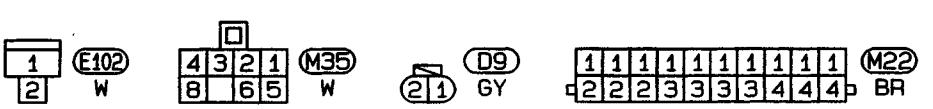

Refer to last page (Foldout page).

M8, E101
M1, D1

HEL122

Simpo PDF Merge and Split Unregistered Version - http://www.simpopdf.com

Wiring Diagram — D/LOCK — (Cont'd)

EL-D/LOCK-08

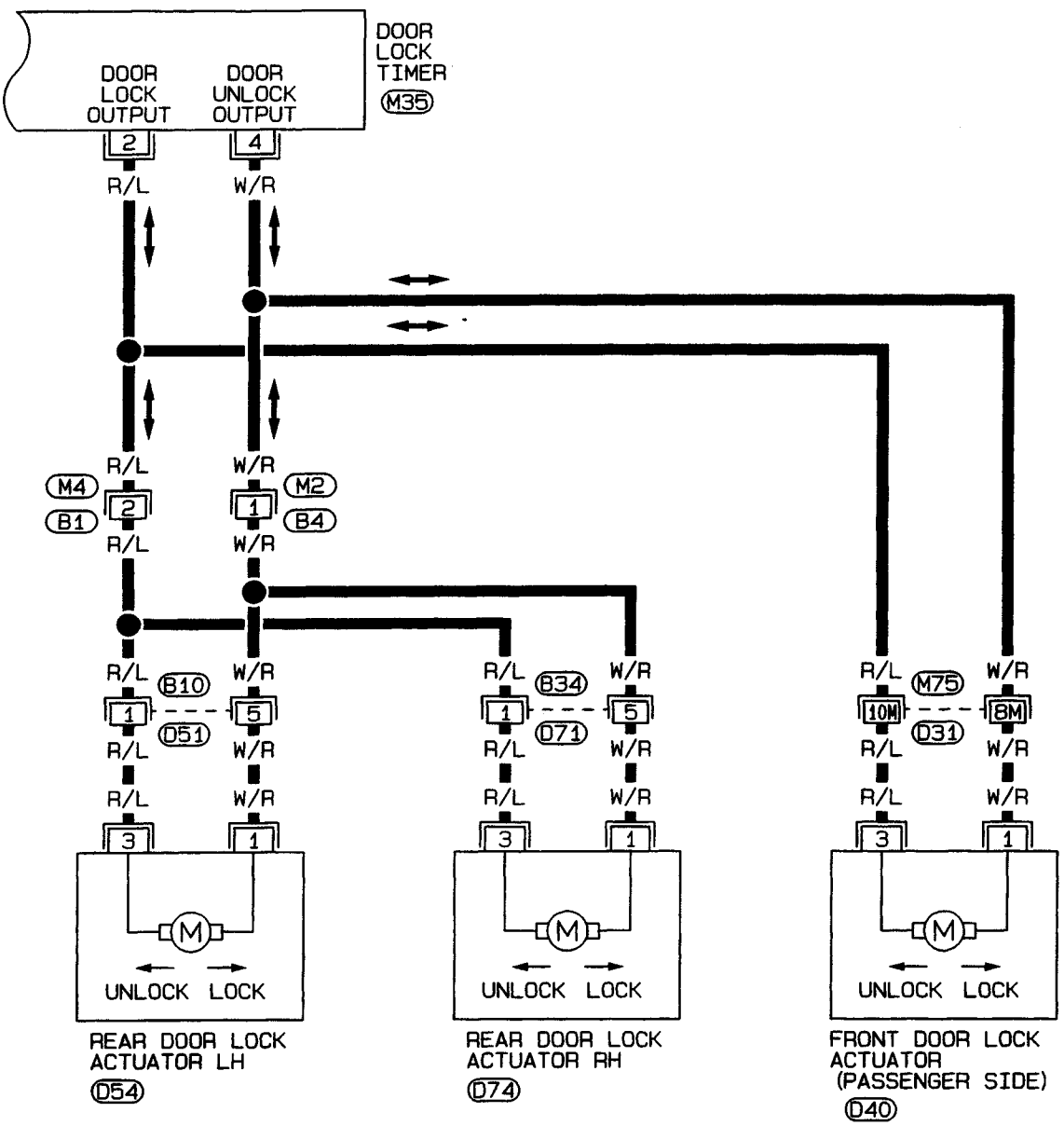

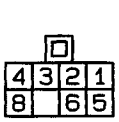
M35 W

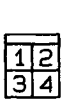
M4 W

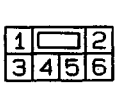
M2 W, B10 W, B34 W


D40 W, D54 W, D74 W

Refer to last page (Foldout page).

M75, D31

EL

HEL123

Simpo PDF Merge and Split Unregistered Version - http://www.simpopdf.com

Wiring Diagram — D/LOCK — (Cont'd)

TYPE-2 (RHD models except for Europe and Australia)

EL-D/LOCK-09

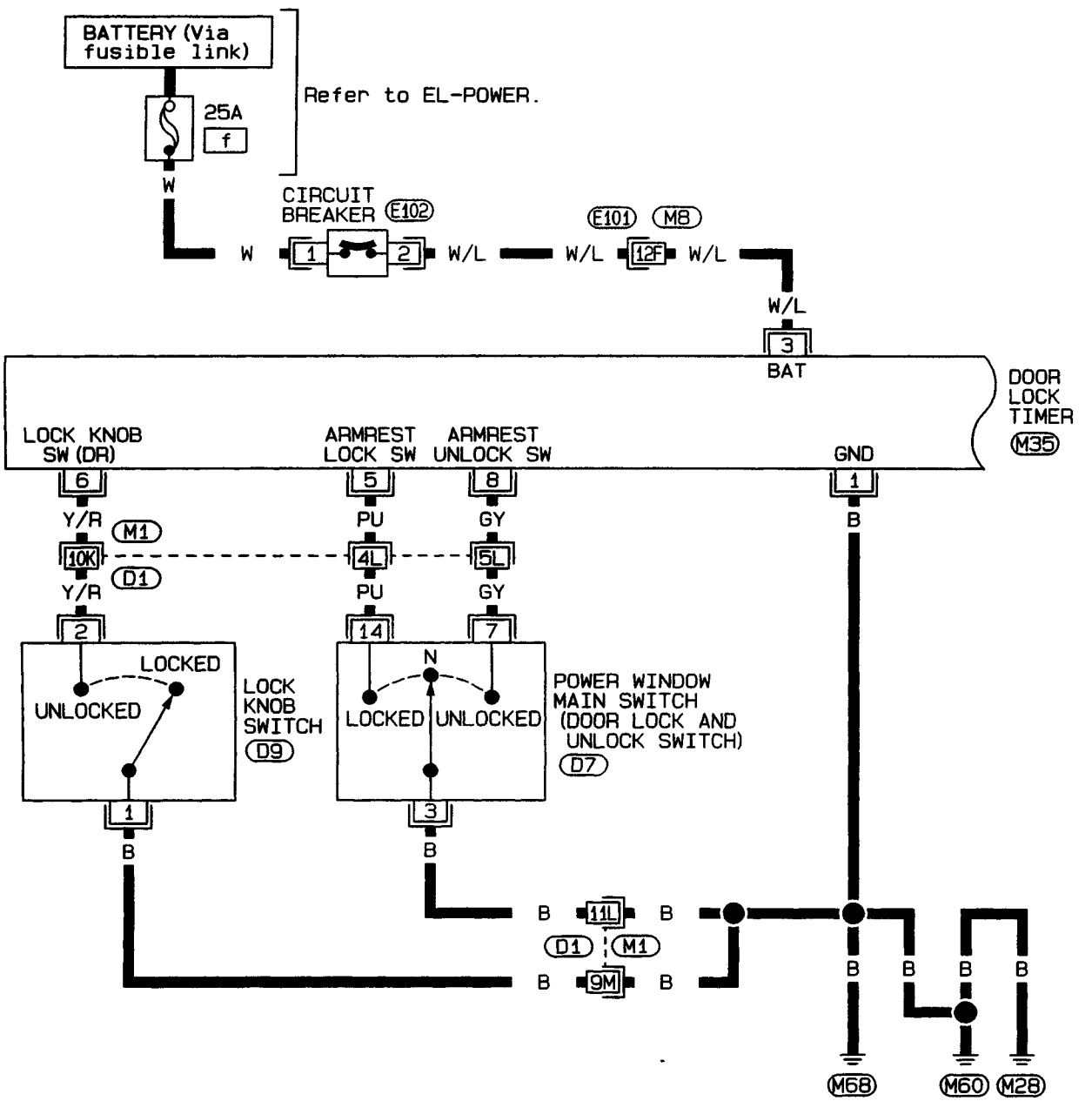

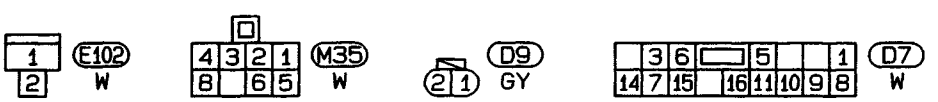

Refer to last page (Foldout page).

M8, E101
M1, D1

HEL124

Simpo PDF Merge and Split Unregistered Version - http://www.simpopdf.com

Wiring Diagram — D/LOCK — (Cont'd)

EL-D/LOCK-10

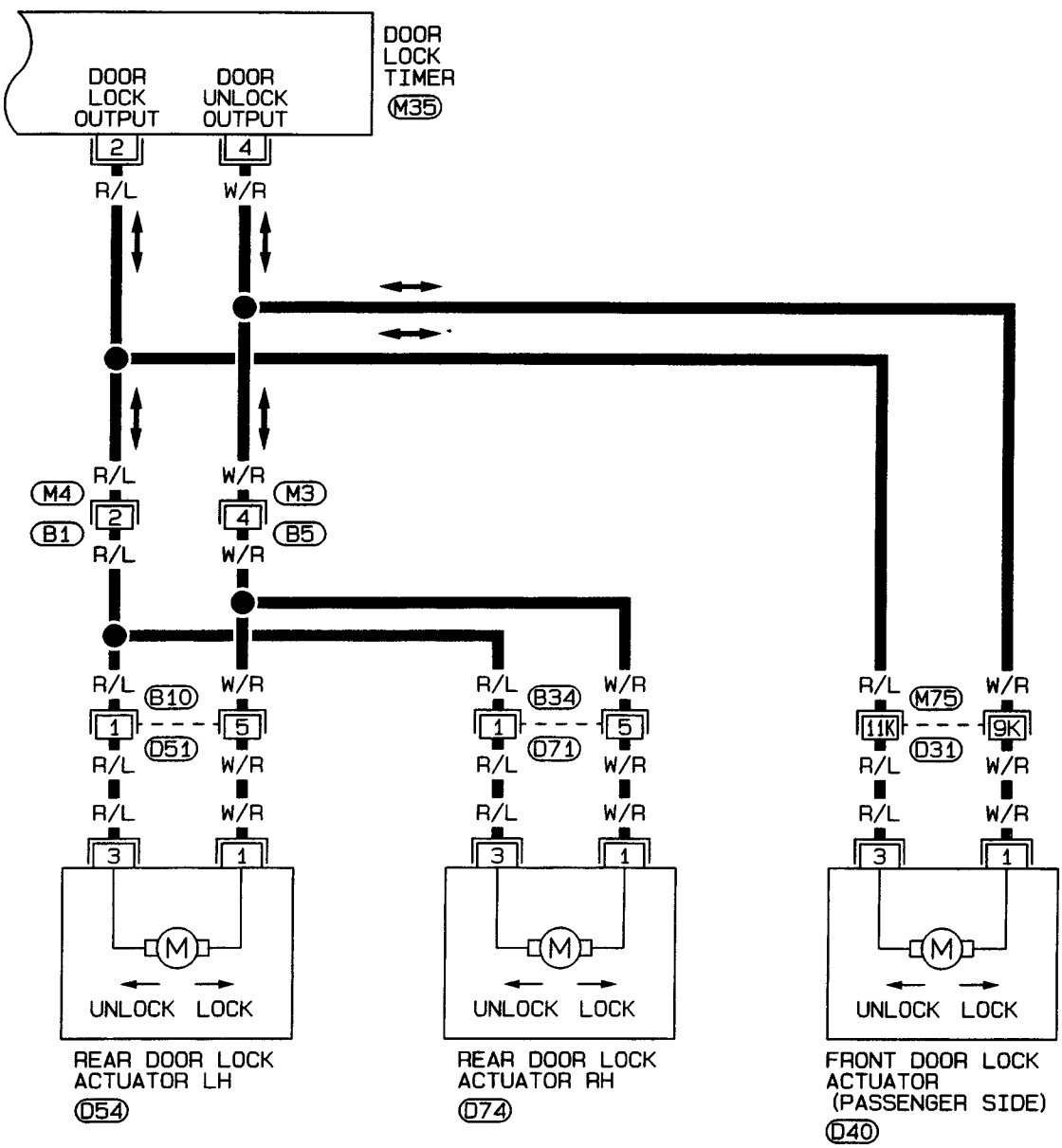

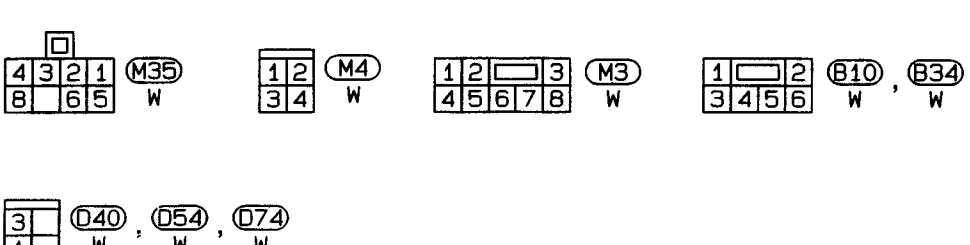

Refer to last page (Foldout page).
M75, D31

EL

HEL125

Simpo PDF Merge and Split Unregistered Version - http://www.simpopdf.com

Trouble Diagnoses — Type 1 (For Europe and Australia)

SYMPTOM CHART

PROCEDURE		Diagnostic Procedure	
REFERENCE PAGE	EL-213	EL-214	EL-215
SYMPTOM	Power supply and ground circuit check	Procedure 1 (Unlock sensor check)	Procedure 2 (Door lock actuator check)
Power door lock does not operate with driver's side lock knob switch and driver door key cylinder.	①		②
Power door lock does not operate with door lock and unlock switch on power window main switch.	①	②	③
Specific door lock actuator does not operate.			①

Perform Diagnostic Procedures in numerical order shown in the symptom chart. Carry out functional tests whenever each step is finished. If the trouble remains after performing all Diagnostic Procedures, replace the door lock timer.

Simpo PDF Merge and Split Unregistered Version - http://www.simpopdf.com

Trouble Diagnoses — Type 1 (For Europe and Australia) (Cont'd)

POWER SUPPLY AND GROUND CIRCUIT CHECK

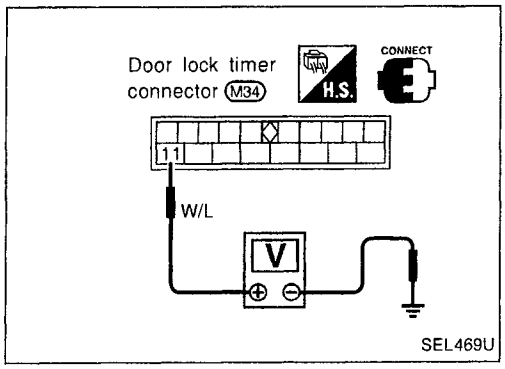

Power supply check

Terminals	Ignition switch operation			
	OFF	ACC	ON	START
⑪ - Ground	Battery voltage			

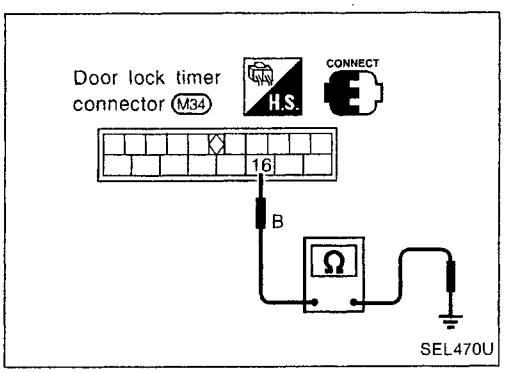

Ground circuit check

Terminals	Continuity
⑯ - Ground	Yes

EL

Simpo PDF Merge and Split Unregistered Version - http://www.simpopdf.com

Trouble Diagnoses — Type 1 (For Europe and Australia) (Cont'd)

PROCEDURE 1

(Unlock sensor check)

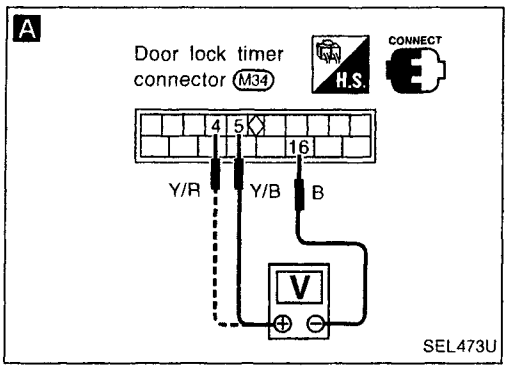

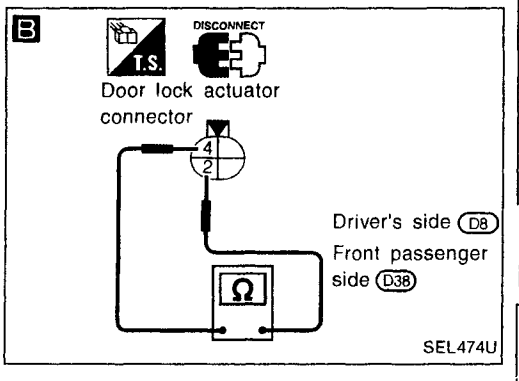

A

UNLOCK SENSOR SIGNAL CHECK
Measure voltage between door lock timer harness terminals ④ and ⑯, ⑤ and ⑯.

Terminals		Condition of unlock sensor and voltage [V]	
⊕	⊖	Lock	Unlock
④	⑯	0	Approx. 12
⑤	⑯		

OK → Unlock sensor signal is OK.

NG ↓

B

UNLOCK SENSOR CHECK
Check continuity between door lock actuator connector terminals ④ and ②.

Terminals	Condition of door lock actuator	Continuity
④ and ②	Lock	Yes
	Unlock	Yes

NG → Replace door lock actuator.

OK ↓

Check the following.
1) Harness between door lock timer and door lock actuator for open/short circuit
2) Door lock actuator ground circuit

Simpo PDF Merge and Split Unregistered Version - http://www.simpopdf.com

Trouble Diagnoses — Type 1 (For Europe and Australia) (Cont'd)

PROCEDURE 2

(Door lock actuator check)

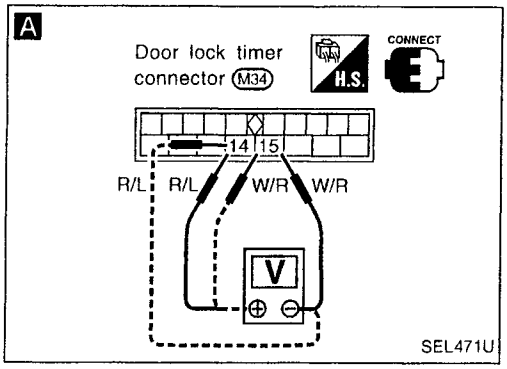

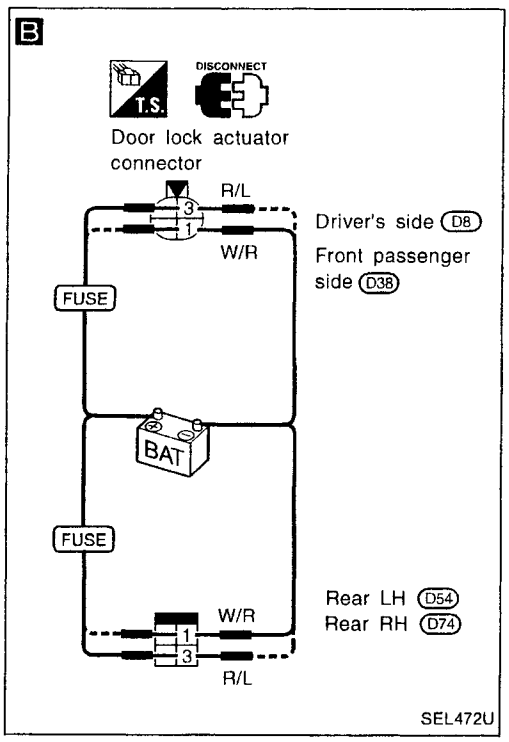

A

DOOR LOCK ACTUATOR OUTPUT SIGNAL CHECK

Measure voltage between door lock timer harness terminals ⑭ and ⑮.

Terminals		Condition of door lock & unlock switch	Voltage [V]
⊕	⊖		
⑭	⑮	Neutral → Unlock	0 → 12 → 0 (Approx. 1.0 sec.)
⑮	⑭	Neutral → Lock	0 → 12 → 0 (Approx. 1.0 sec.)

* The voltage values are approximate.

NG → Replace door lock timer.

OK ↓

B

DOOR LOCK ACTUATOR CHECK

Apply 12V direct current to terminals and check operation.

Door lock actuator operation	Terminals	
	⊕	⊖
Lock	③	①
Unlock	①	③

NG → Replace door lock actuator.

OK ↓

Check harness between door lock timer and door lock actuator for open/short circuit.

EL

Simpo PDF Merge and Split Unregistered Version - http://www.simpopdf.com

Trouble Diagnoses — Type 2 (Except for Europe and Australia)

SYMPTOM CHART

PROCEDURE		Diagnostic Procedure		
REFERENCE PAGE	EL-217	EL-217	EL-218	EL-219
SYMPTOM	Power supply and ground circuit check	Procedure 1 (Lock knob switch check)	Procedure 2 (Door lock & unlock switch check)	Procedure 3 (Door lock actuator check)
Power door lock does not operate with driver's side lock knob switch and driver door key cylinder.	①	②		③
Power door lock does not operate with door lock and unlock switch on power window main switch.	①		②	③
Specific door lock actuator does not operate.				①

Perform Diagnostic Procedures in numerical order shown in the symptom chart. Carry out functional tests whenever each step is finished. If the trouble remains after performing all Diagnostic Procedures, replace the door lock timer.

Simpo PDF Merge and Split Unregistered Version - http://www.simpopdf.com

Trouble Diagnoses — Type 2 (Except for Europe and Australia) (Cont'd)

POWER SUPPLY AND GROUND CIRCUIT CHECK

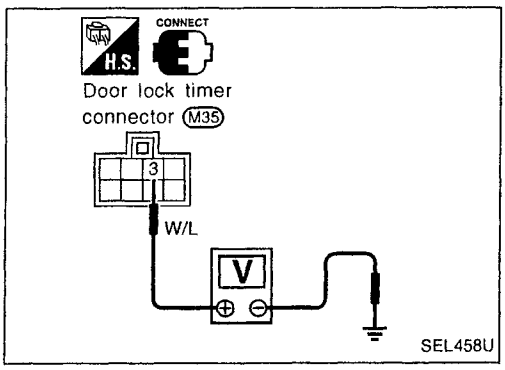

Power supply check

Terminals	Ignition switch operation			
	OFF	ACC	ON	START
③ - Ground	Battery voltage			

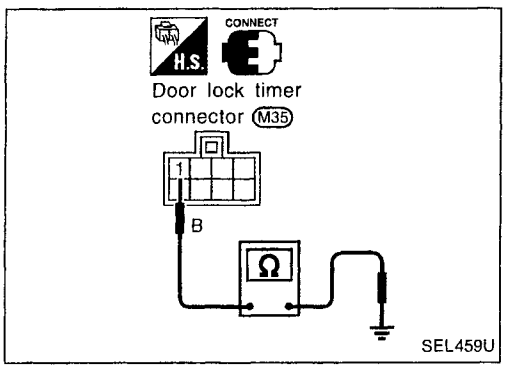

Ground circuit check

Terminals	Continuity
① - Ground	Yes

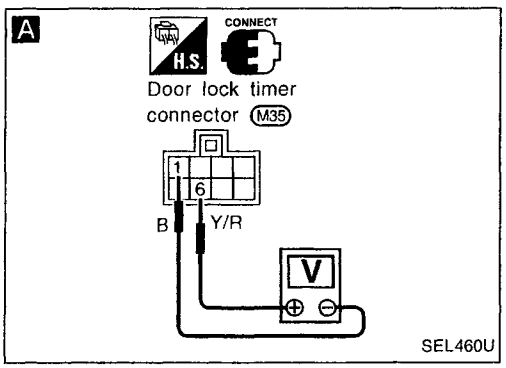

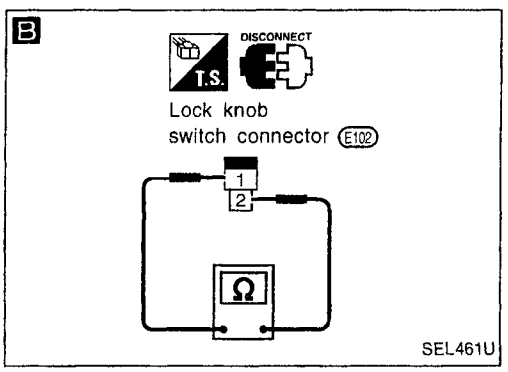

PROCEDURE 1

(Lock knob switch check)

A

LOCK KNOB SWITCH SIGNAL CHECK
Measure voltage between door lock timer harness terminals ⑥ and ①.

Condition of lock knob switch	Voltage [V]
Lock	Approx. 12
Unlock	0

OK → Lock knob switch is OK.

NG ↓

B

LOCK KNOB SWITCH CHECK
Check continuity between lock knob switch terminals ① and ②.

Condition of lock knob switch	Continuity
Lock	No
Unlock	Yes

NG → Replace lock knob switch.

OK ↓

Check the following.
1) Harness between door lock timer and lock knob switch for open/short circuit
2) Lock knob switch ground circuit

EL

Simpo PDF Merge and Split Unregistered Version - http://www.simpopdf.com

Trouble Diagnoses — Type 2 (Except for Europe and Australia) (Cont'd)

PROCEDURE 2

(Door lock & unlock switch check)

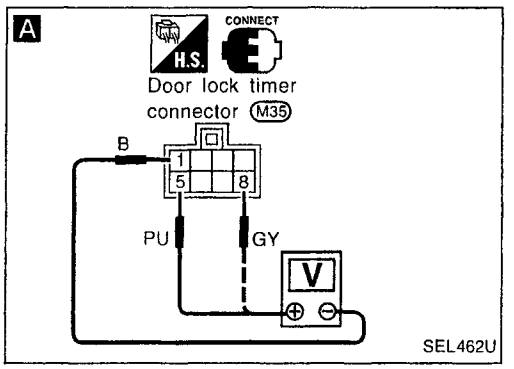

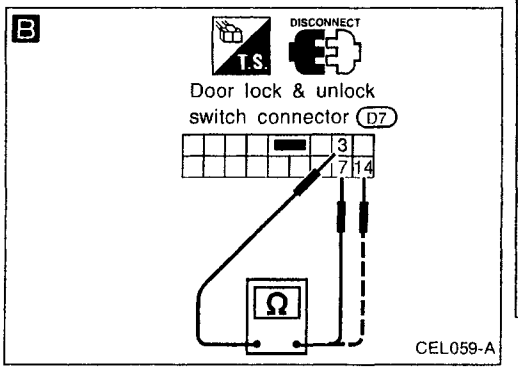

A

DOOR LOCK & UNLOCK SWITCH SIGNAL CHECK
Measure voltage between door lock timer harness terminals ⑤ and ①, ⑧ and ①.

Terminals		Condition of door lock & unlock switch	Voltage [V]
⊕	⊖		
⑤	①	Lock	Approx. 12
⑧	①	Unlock	Approx. 12

OK → Door lock & unlock switch is OK.

NG ↓

B

DOOR LOCK & UNLOCK SWITCH CHECK
Check continuity between door lock & unlock switch terminals ⑦ and ③, ⑭ and ③.

Terminals	Condition of door lock & unlock switch	Continuity
⑦ and ③	Lock	Yes
⑭ and ③	Unlock	Yes

NG → Replace door lock & unlock switch.

OK ↓

Check the following.
1) Harness between door lock timer and door lock & unlock switch for open/short circuit
2) Door lock & unlock switch ground circuit

Simpo PDF Merge and Split Unregistered Version - http://www.simpopdf.com

Trouble Diagnoses — Type 2 (Except for Europe and Australia) (Cont'd)

PROCEDURE 3

(Door lock actuator check)

A

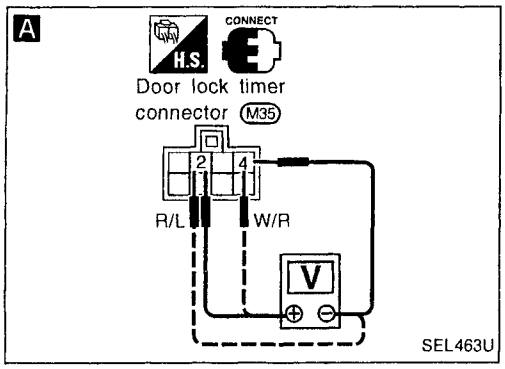

B

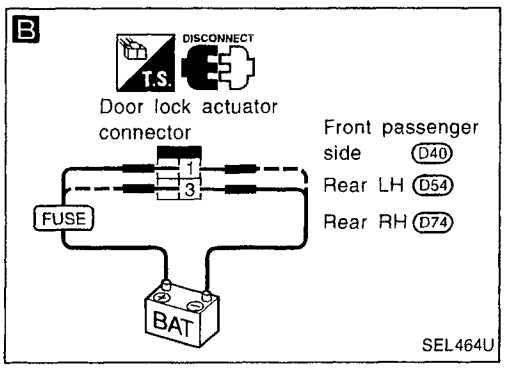

A

DOOR LOCK ACTUATOR OUTPUT SIGNAL CHECK

Measure voltage between door lock timer harness terminals ② and ④.

Terminals		Condition of door lock & unlock switch	Voltage [V]
⊕	⊖		
②	④	Neutral → Lock	0 → 12 → 0 (Approx. 1.0 sec.)
④	②	Neutral → Unlock	0 → 12 → 0 (Approx. 1.0 sec.)

* The voltage values are approximate.

NG → Replace door lock timer.

OK ↓

B

DOOR LOCK ACTUATOR CHECK

Apply 12V direct current to terminals and check operation.

Door lock actuator operation	Terminals	
	⊕	⊖
Lock	①	③
Unlock	③	①

NG → Replace door lock actuator.

OK ↓

Check harness between door lock timer and door lock actuator for open/short circuit.

EL

Simpo PDF Merge and Split Unregistered Version - http://www.simpopdf.com

★ For removal of door mirror, refer to "DOOR MIRROR" in BT section.

Wiring Diagram — MIRROR —

LHD MODELS

EL-MIRROR-01

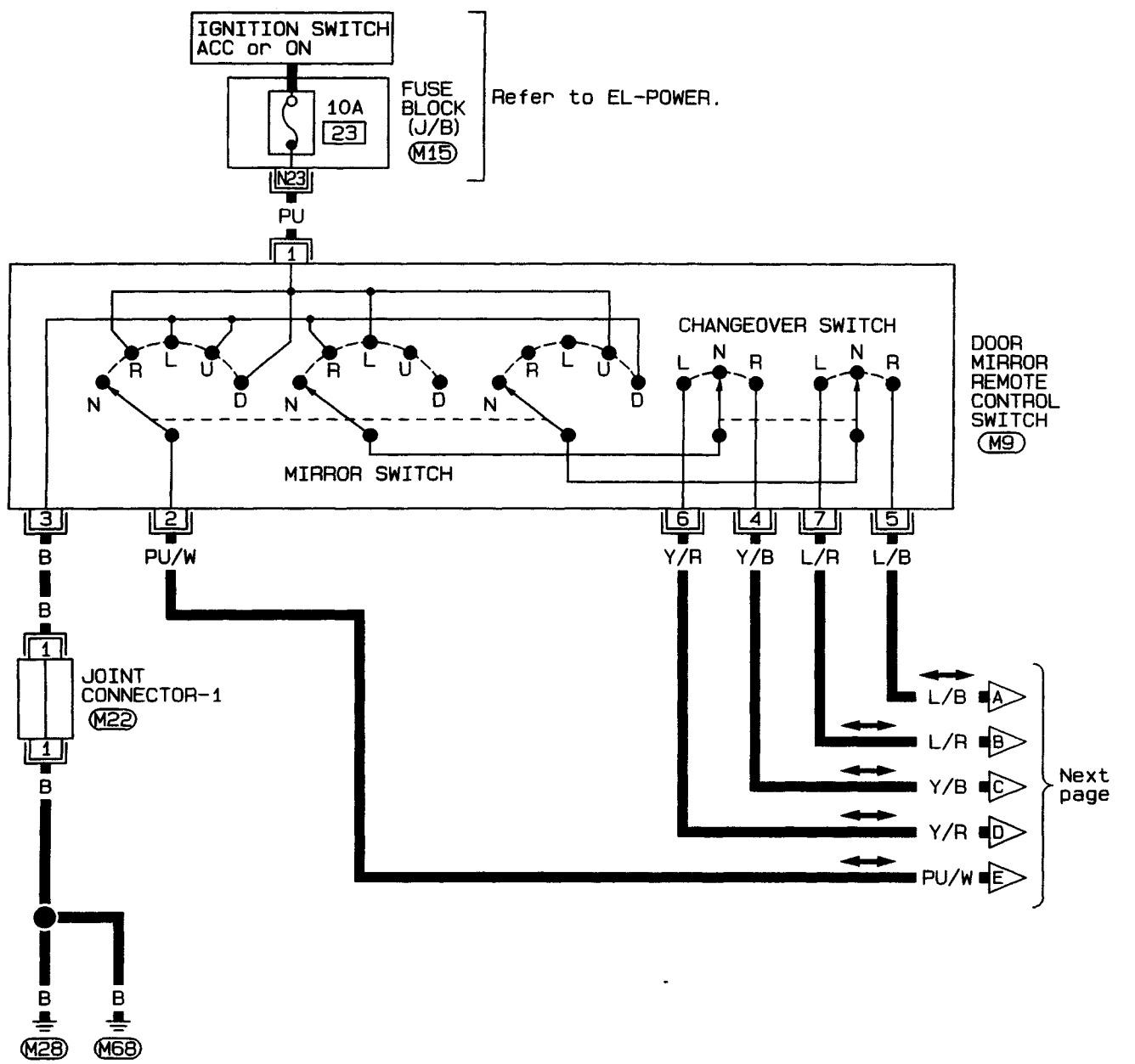

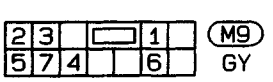

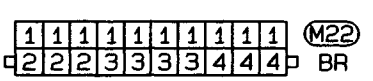

Refer to last page (Foldout page).

M15

HEL126

Simpo PDF Merge and Split Unregistered Version - http://www.simpopdf.com

Wiring Diagram — MIRROR — (Cont'd)

EL-MIRROR-02

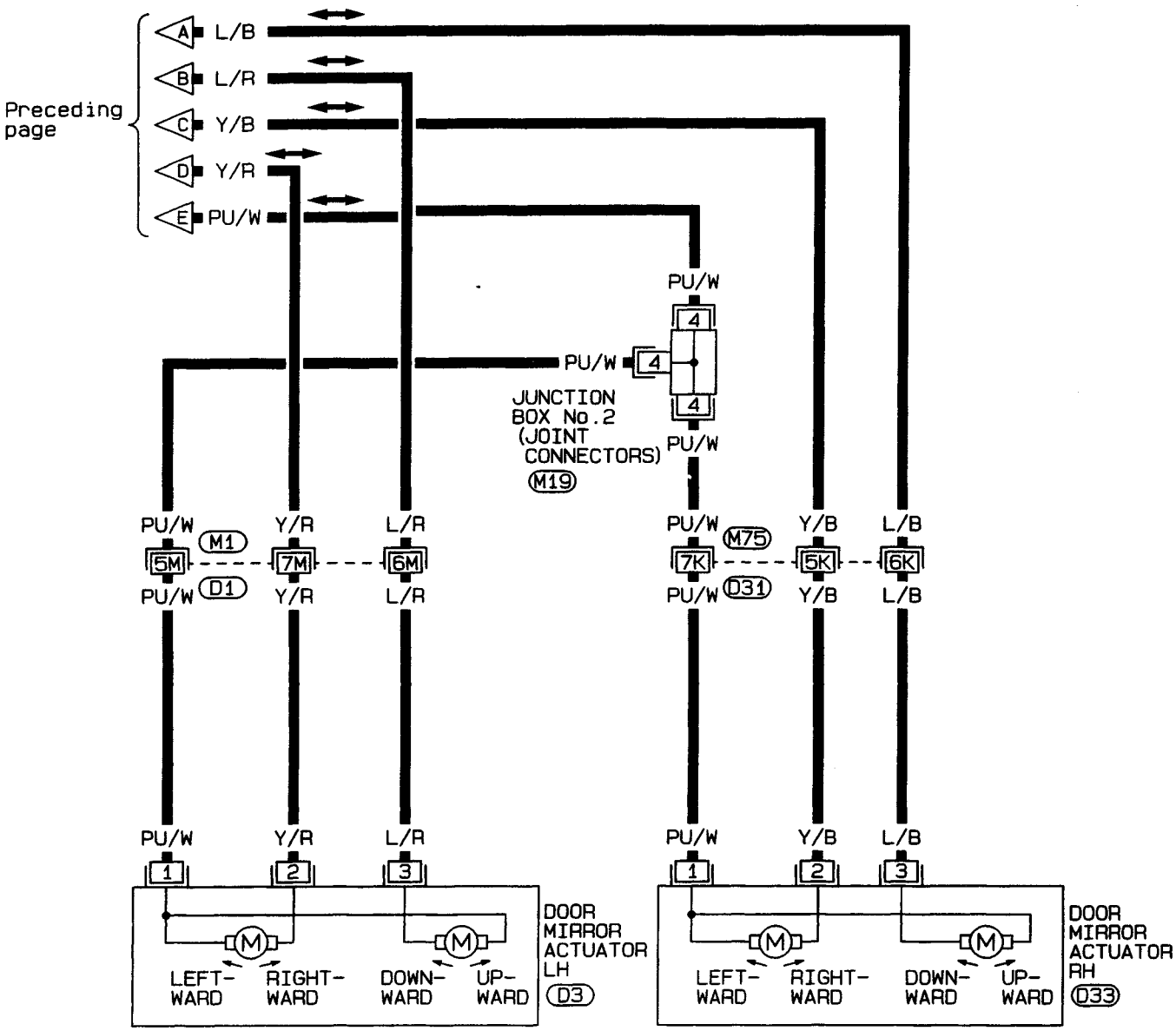

1 2 3 D3 BR, D33 BR

Refer to last page (Foldout page).

M1, D1
M75, D31
M19

CAUTION : Don't attempt to repair, splice or modify the flexible flat circuit (FFC). If the FFC is damaged, replace with a new one.

HEL127

EL

Simpo PDF Merge and Split Unregistered Version - http://www.simpopdf.com

Wiring Diagram — MIRROR — (Cont'd)

RHD MODELS

EL-MIRROR-03

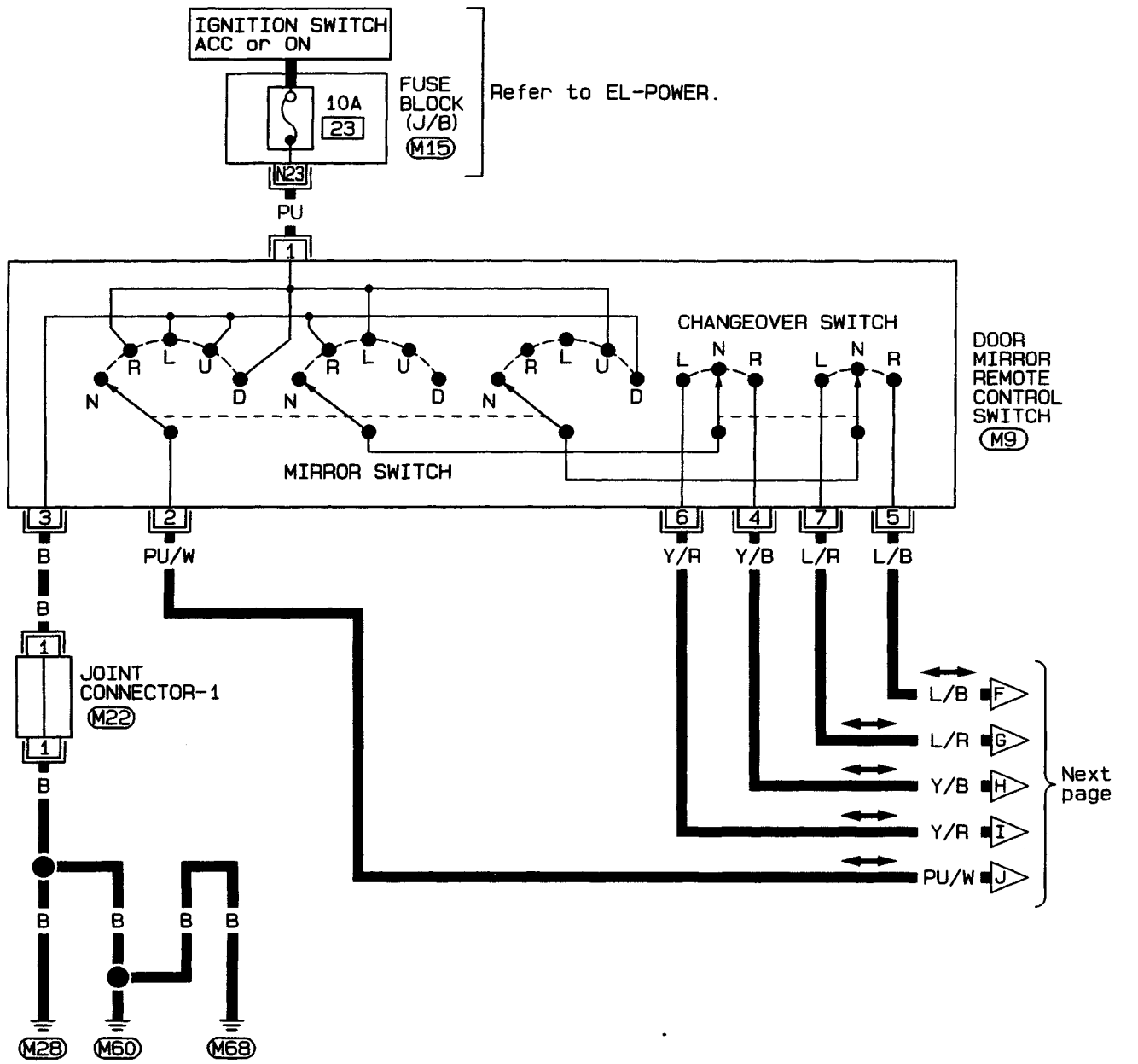

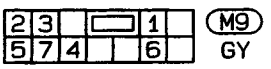

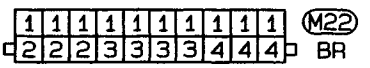

Refer to last page
(Foldout page).

M15

HEL128

Simpo PDF Merge and Split Unregistered Version - http://www.simpopdf.com

Wiring Diagram — MIRROR — (Cont'd)

EL-MIRROR-04

UA : For Europe and Australia
GE : Except for Europe and Australia

*1 ··· UA 5M , GE 3M
*2 ··· UA 7M , GE 5M
*3 ··· UA 6M , GE 4M

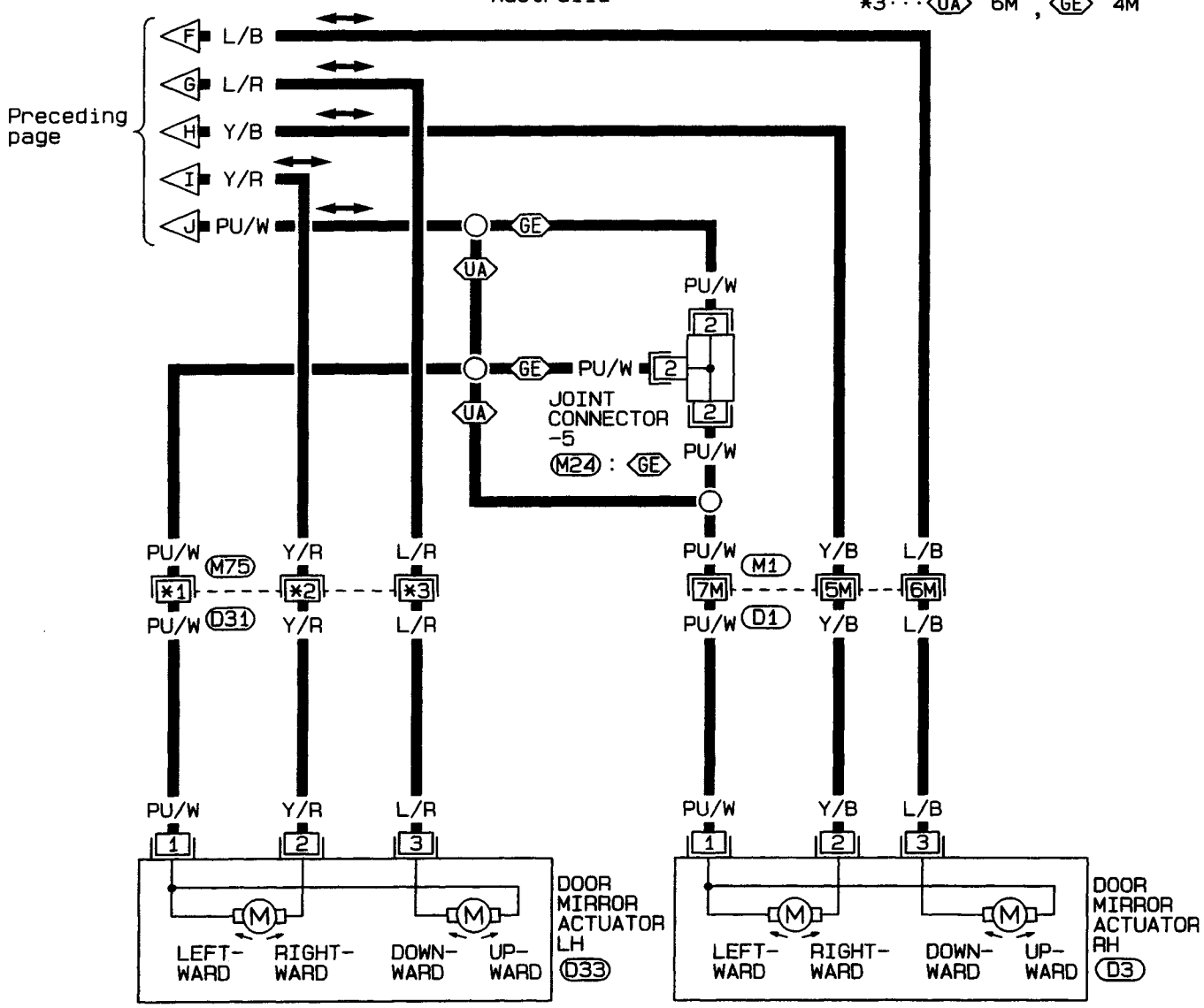

1 2 3 D3 BR , D33 BR

1 1 1 2 2 2 3 3 3 3 / 4 4 4 5 5 5 6 6 6 6 M24 OR

Refer to last page (Foldout page).

M1 , D1
M75 , D31

CAUTION : Don't attempt to repair, splice or modify the flexible flat circuit (FFC). If the FFC is damaged, replace with a new one.

HEL129

EL

Simpo PDF Merge and Split Unregistered Version - http://www.simpopdf.com

★ For removal and adjustment of sun roof, refer to "SUN ROOF" in BT section.

Wiring Diagram — SROOF —

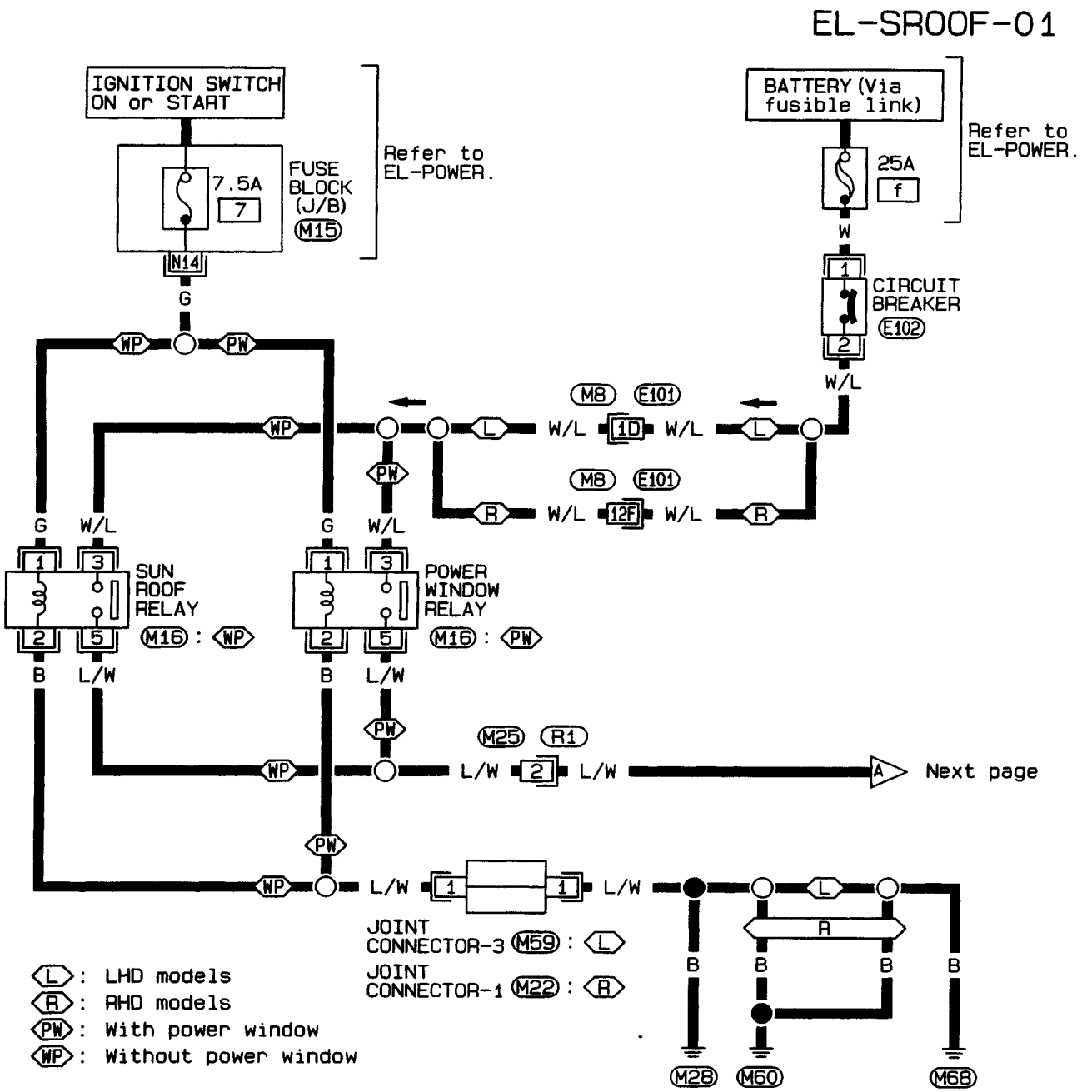

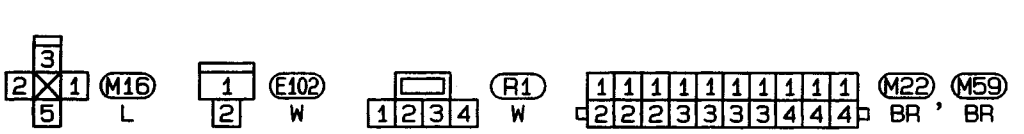

Refer to last page (Foldout page).

M8 , E101
M15

HEL130

Simpo PDF Merge and Split Unregistered Version - http://www.simpopdf.com

Wiring Diagram — SROOF — (Cont'd)

EL-SROOF-02

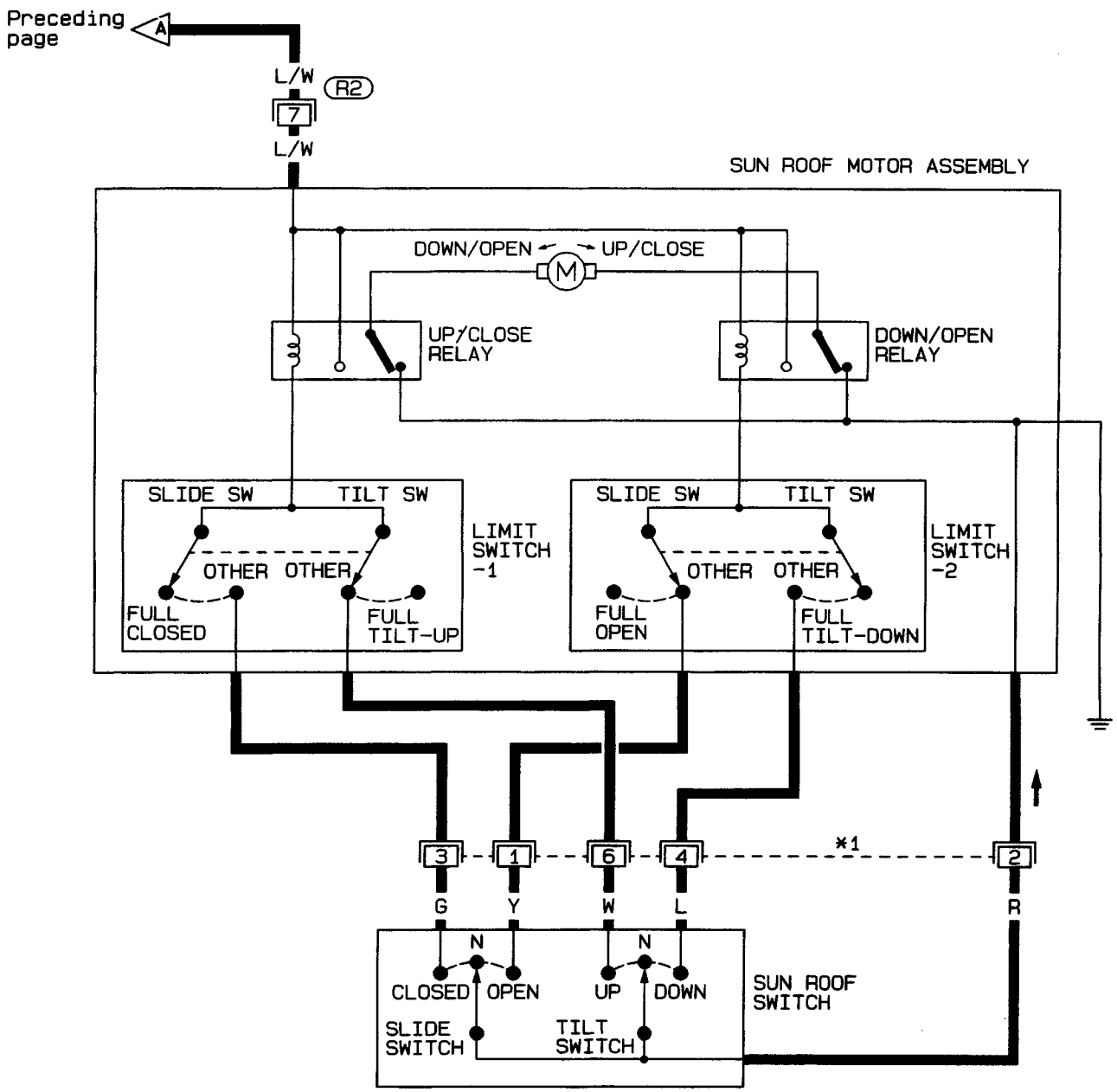

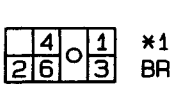

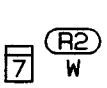

EL

HEL131

Simpo PDF Merge and Split Unregistered Version - http://www.simpopdf.com

Wiring Diagram — HORN —

LHD MODELS

EL-HORN-01

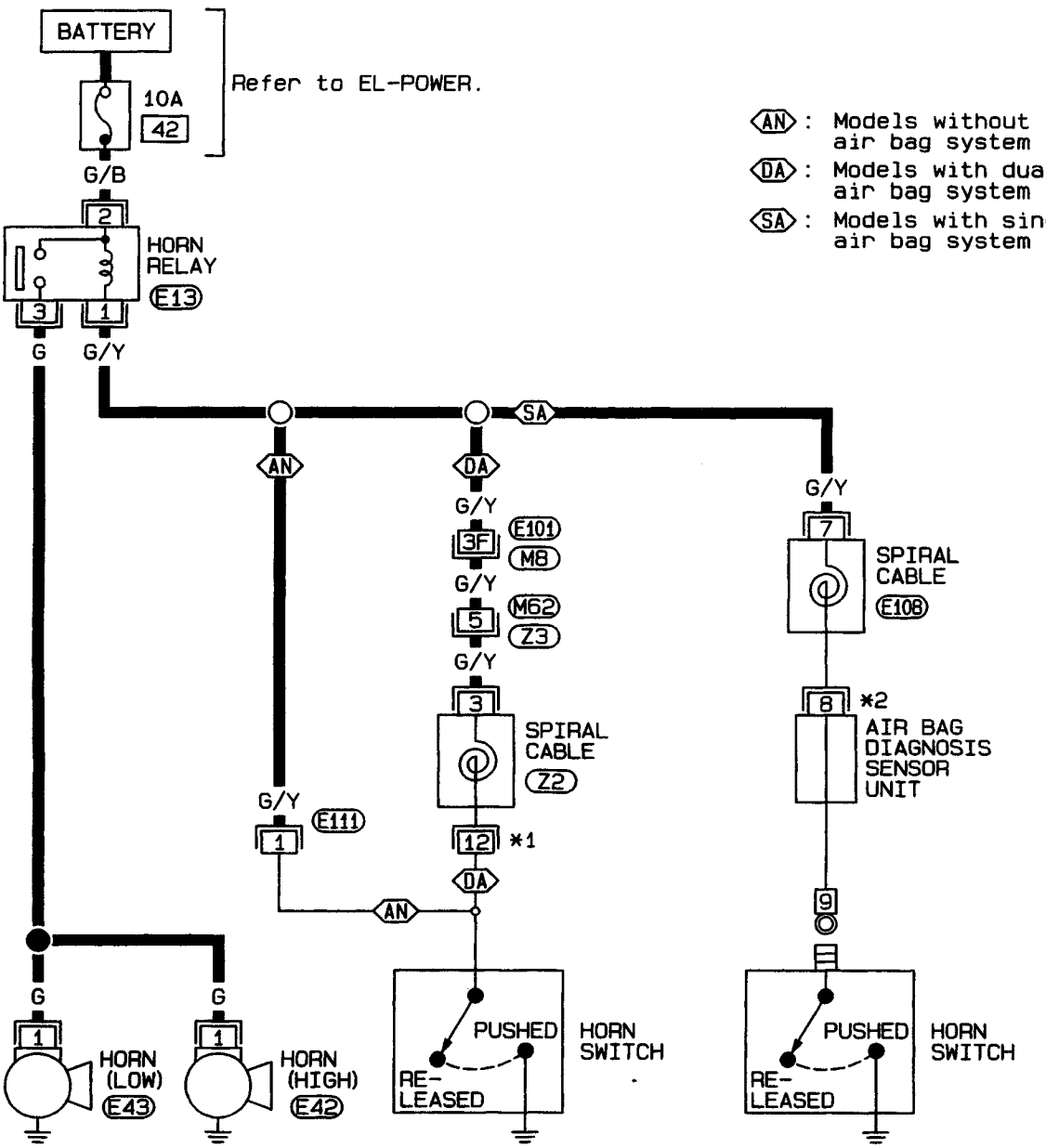

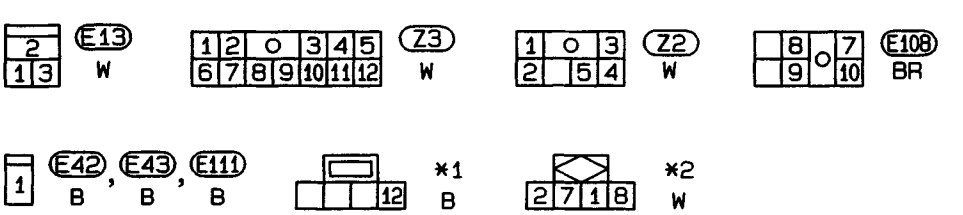

Refer to last page (Foldout page).
M8, E101

HEL132

Simpo PDF Merge and Split Unregistered Version - http://www.simopdf.com

Wiring Diagram — HORN — (Cont'd)

EL-HORN-02

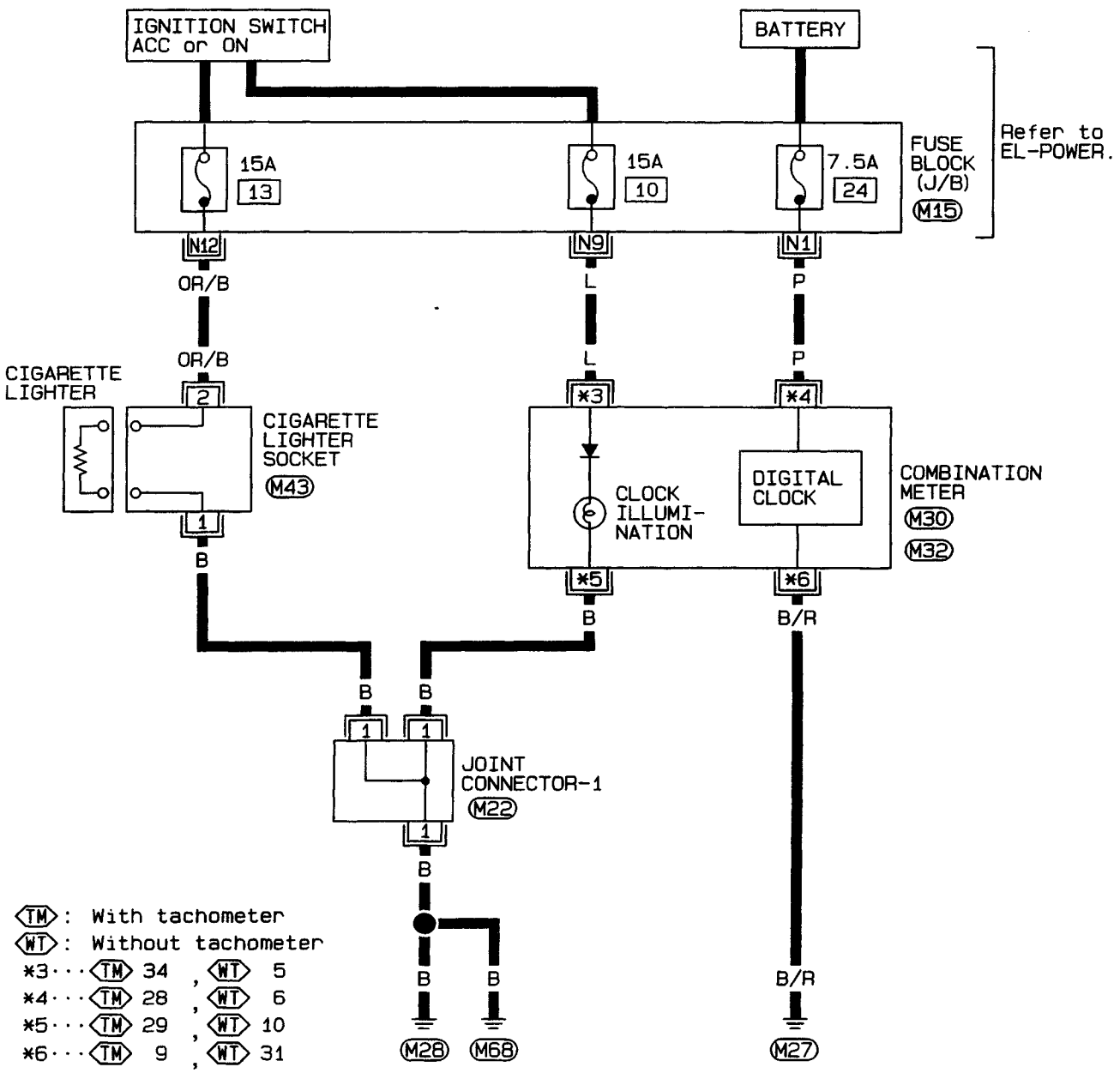

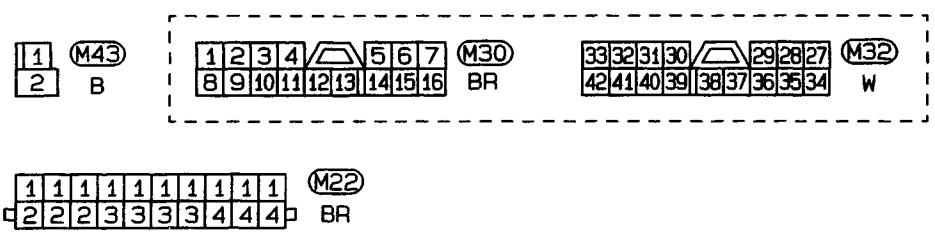

Refer to last page (Foldout page).

M15

EL

HEL133

Simpo PDF Merge and Split Unregistered Version - http://www.simopdf.com

Wiring Diagram — HORN — (Cont'd)

RHD MODELS

EL-HORN-03

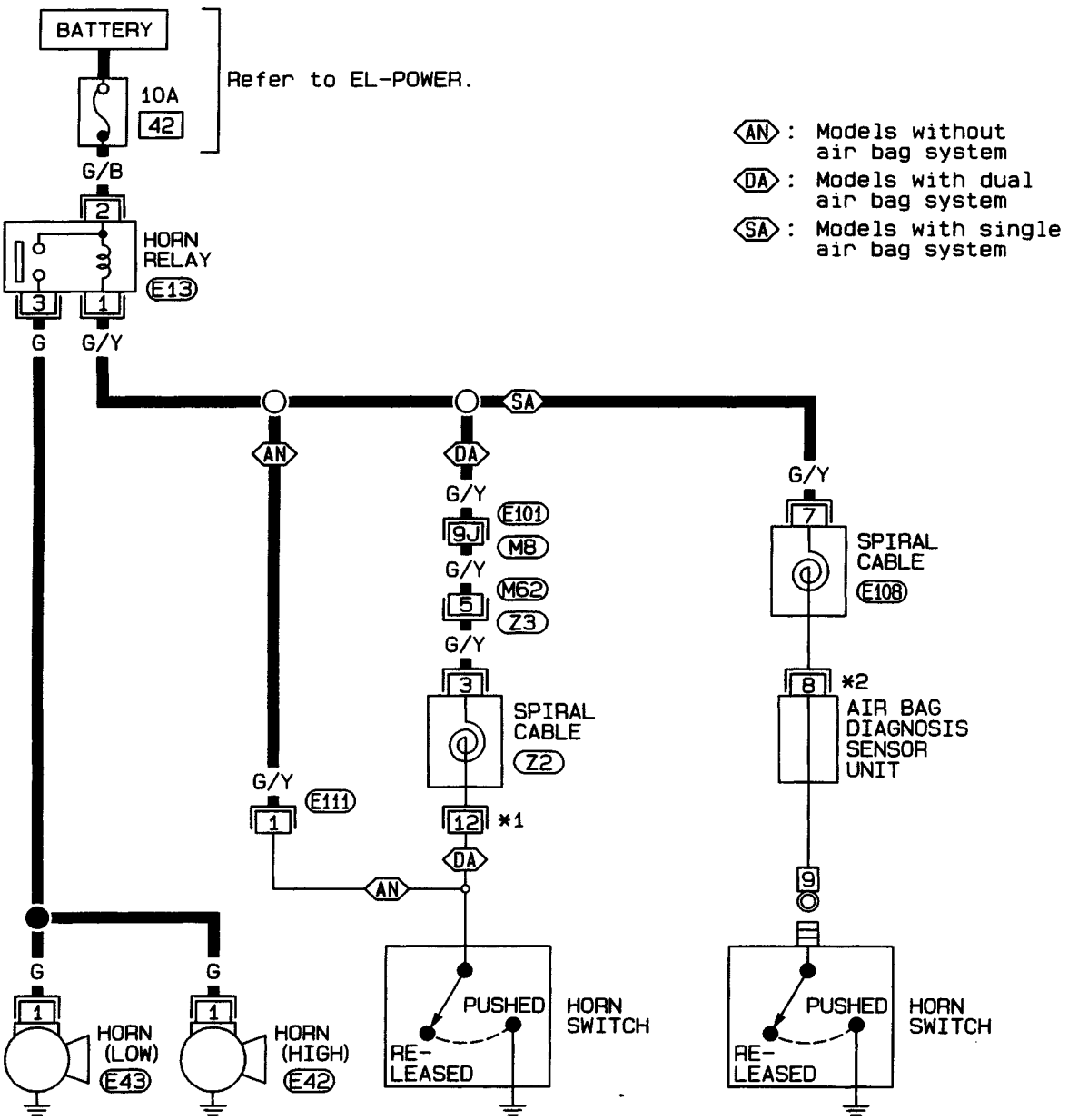

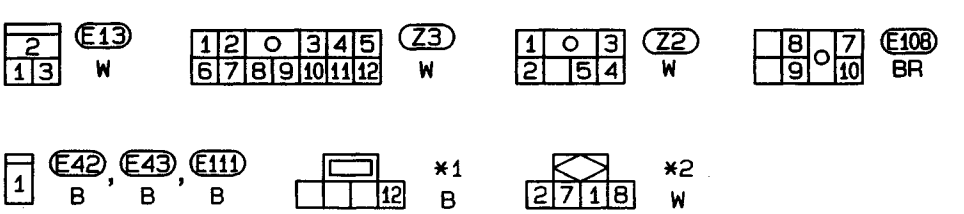

Refer to last page (Foldout page).
M8, E101

HEL134

Simpo PDF Merge and Split Unregistered Version - http://www.simopdf.com

Wiring Diagram — HORN — (Cont'd)

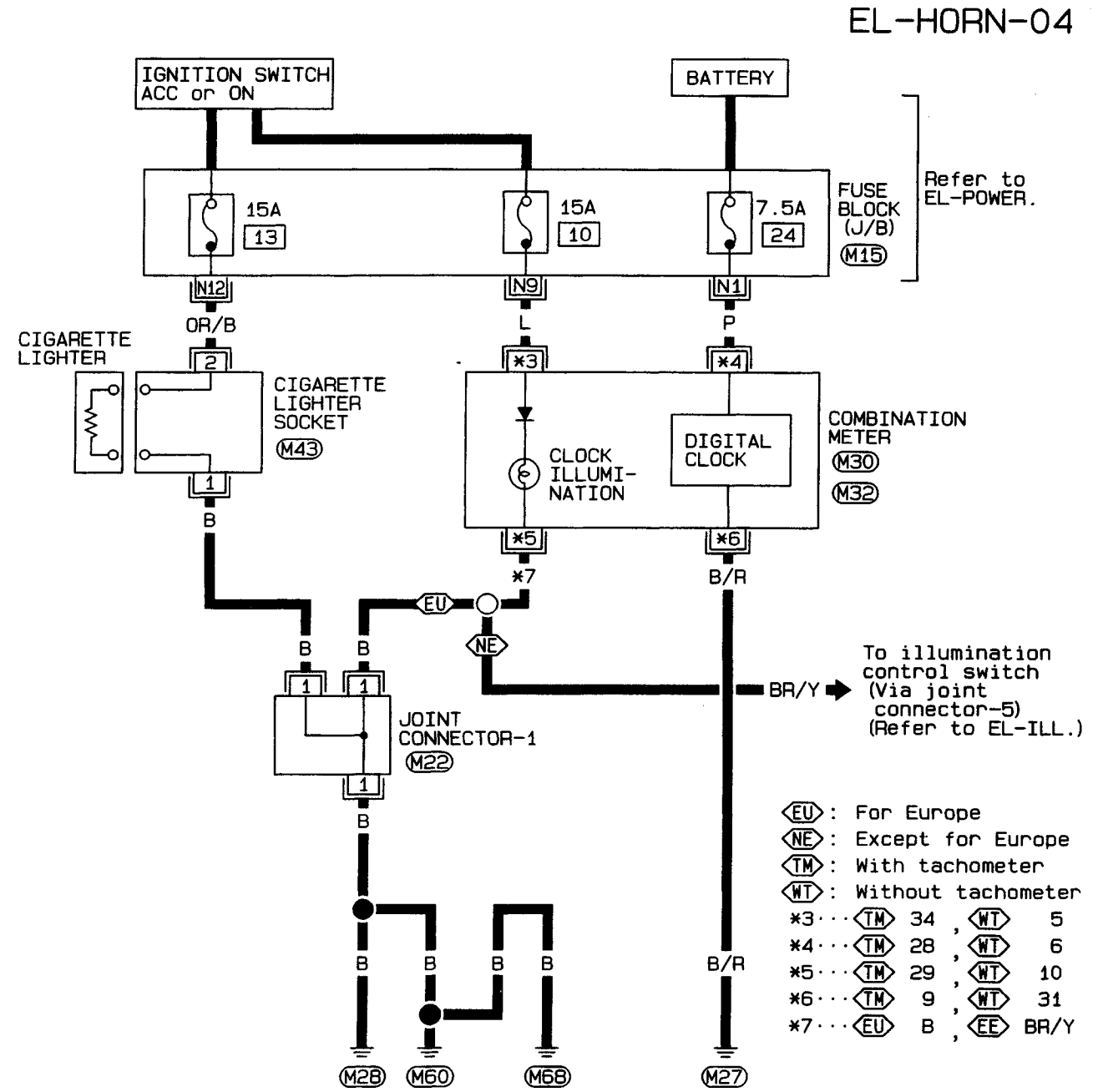

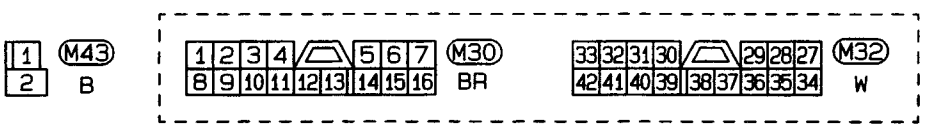

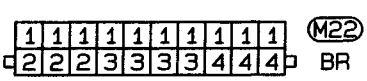

Refer to last page (Foldout page).

M15

EL

HEL135

Simpo PDF Merge and Split Unregistered Version - http://www.simpopdf.com

System Description (For models with daytime light system)

For models without daytime light system, refer to wiring diagrams, EL-233 and 234.

The rear window and door mirror defogger system is controlled by the rear window defogger timer.
Power is supplied at all times
- to rear window defogger relay terminal ③
- through 20A fuse (No. 5, located in the fuse block).

With the ignition switch in the ACC or ON position, power is supplied
- to mirror defogger relay terminal ③
- through 10A fuse (No. 23, located in the fuse block).

With the ignition switch in the ON or START position, power is supplied
- to rear window defogger relay terminal ①
- through 10A fuse (No. 25, located in the fuse block)
- to rear window defogger timer terminal ①
- through 7.5A fuse (No. 7, located in the fuse block).

Ground is supplied
- to rear window defogger switch terminal ② and
- to rear window defogger timer terminal ④
- through body grounds M28 and M68.

Operation

The ignition switch must be in the ON or START position for defogger operation.
With the rear window defogger switch in the ON position and for approximately 12 - 16 minutes after the rear window defogger switch has turned to OFF from ON, ground is supplied
- through terminal ① of the rear window defogger switch
- to rear window defogger timer terminal ③.

Terminal ② of the rear window defogger timer then supplies ground to rear window defogger relay terminal ②.
With power and ground supplied, rear window defogger relay is energized.
For rear window defogger system, power is supplied
- through terminal ⑤ of the rear window defogger relay
- to condenser terminal ①
- through terminal ② of the condenser
- to the rear window defogger terminal ①.

For mirror defogger system, power is supplied
- through terminal ⑤ of the rear window defogger relay
- to mirror defogger relay terminal ①.

Ground is supplied
- through body grounds M28 and M68
- to mirror defogger relay terminal ②.

With power and ground supplied, mirror defogger relay is energized.
- through mirror defogger relay terminal ⑤
- to each door mirror defogger terminal ②.

Ground is supplied
- to rear window defogger terminal ②
- through body ground B204, and
- to each door mirror defogger terminal ①
- through body grounds M28 and M68.

With power and ground supplied, each defogger filament heats and defogs the rear window and door mirror.
When the system is activated, the rear window defogger indicator illuminates in the rear window defogger switch.
Power is supplied
- to terminal ⑤ of the rear window defogger switch
- from terminal ⑤ of the rear window defogger relay.

Terminal ⑥ of the rear window defogger switch is grounded through body grounds M28 and M68.

Simpo PDF Merge and Split Unregistered Version - http://www.simpopdf.com

Wiring Diagram — DEF —

LHD MODELS WITH DAYTIME LIGHT SYSTEM

EL-DEF-01

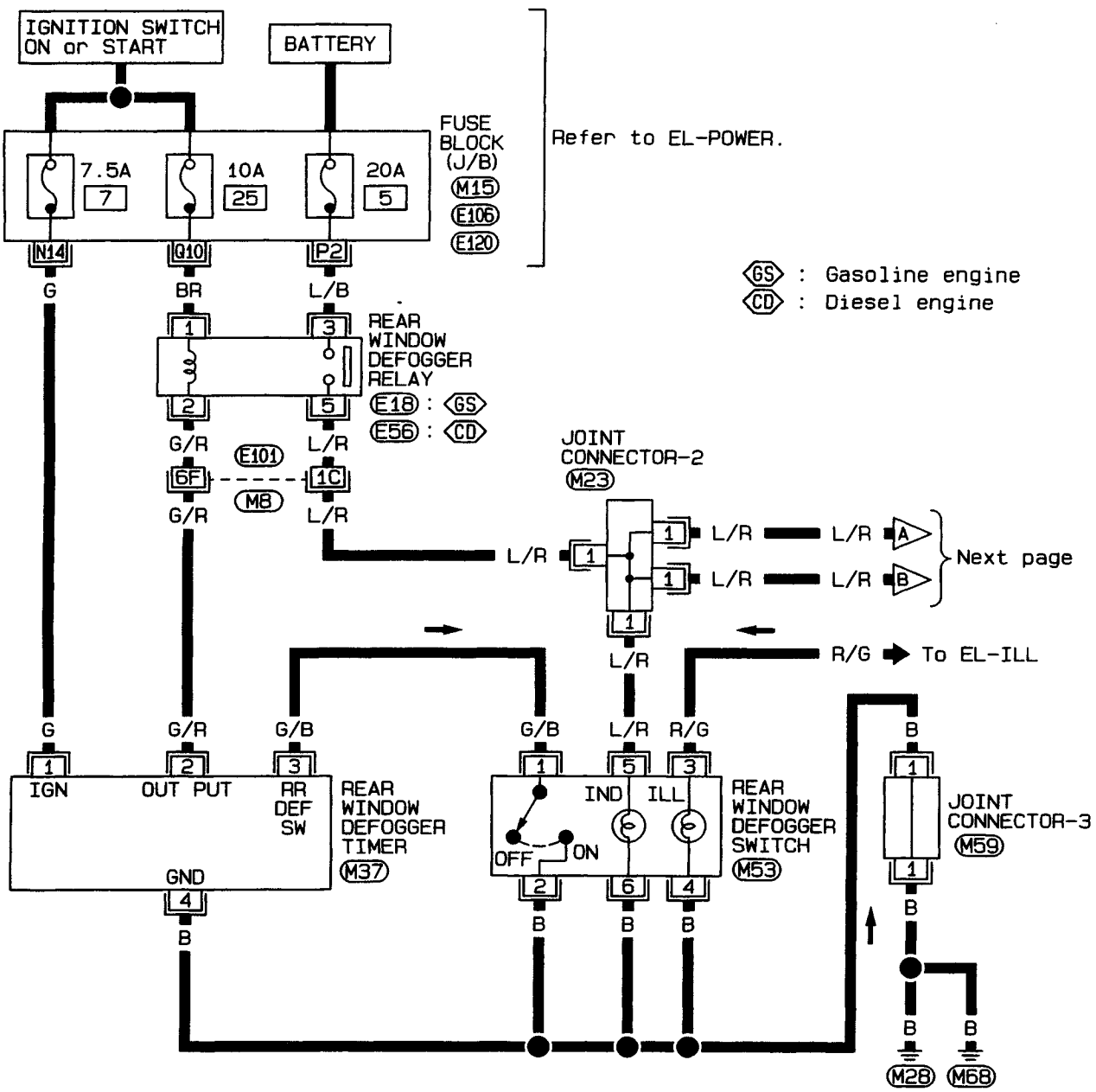

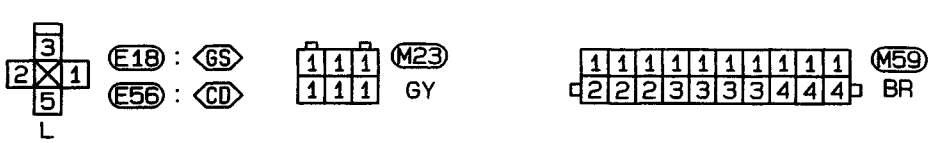

Refer to last page (Foldout page).

M8, E101
M15, E106, E120

EL

HEL136

Simpo PDF Merge and Split Unregistered Version - http://www.simpopdf.com

Wiring Diagram — DEF — (Cont'd)

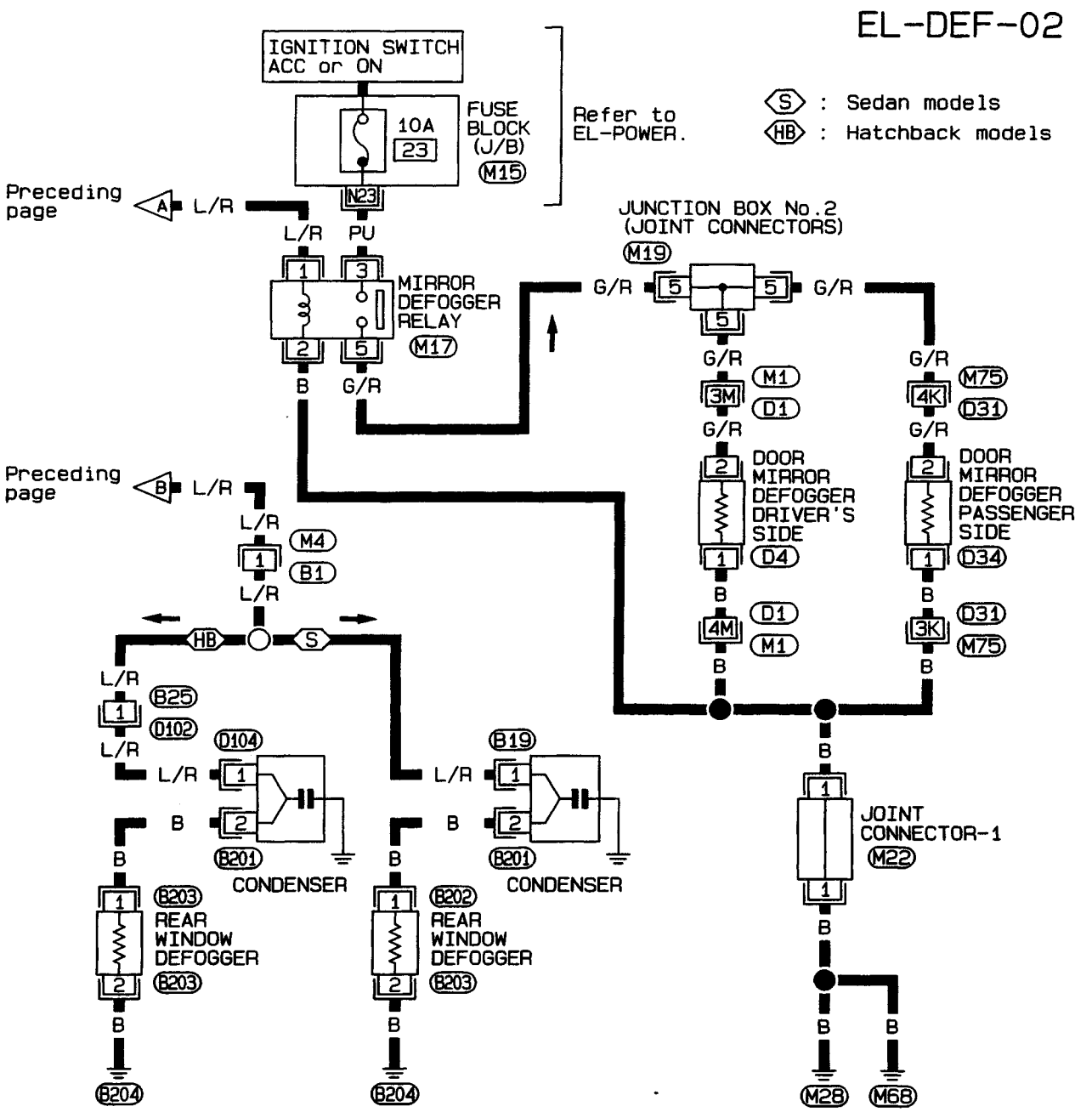

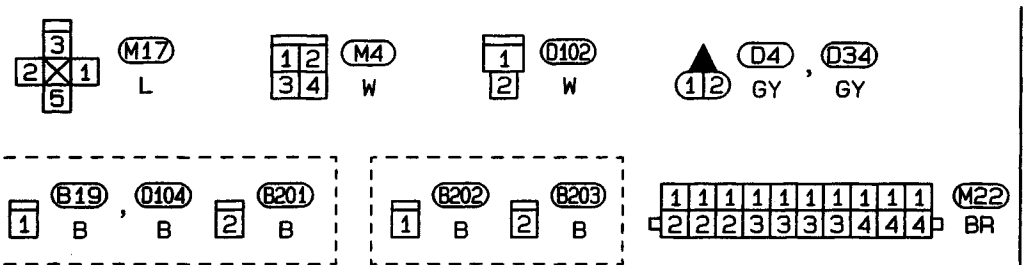

Refer to last page (Foldout page).

M1 , D1
M75 , D31
M15
M19

CAUTION : Don't attempt to repair, splice or modify the flexible flat circuit (FFC). If the FFC is damaged, replace with a new one.

HEL137

Simpo PDF Merge and Split Unregistered Version - http://www.simpopdf.com

Wiring Diagram — DEF — (Cont'd)

LHD MODELS WITHOUT DAYTIME LIGHT SYSTEM

EL-DEF-03

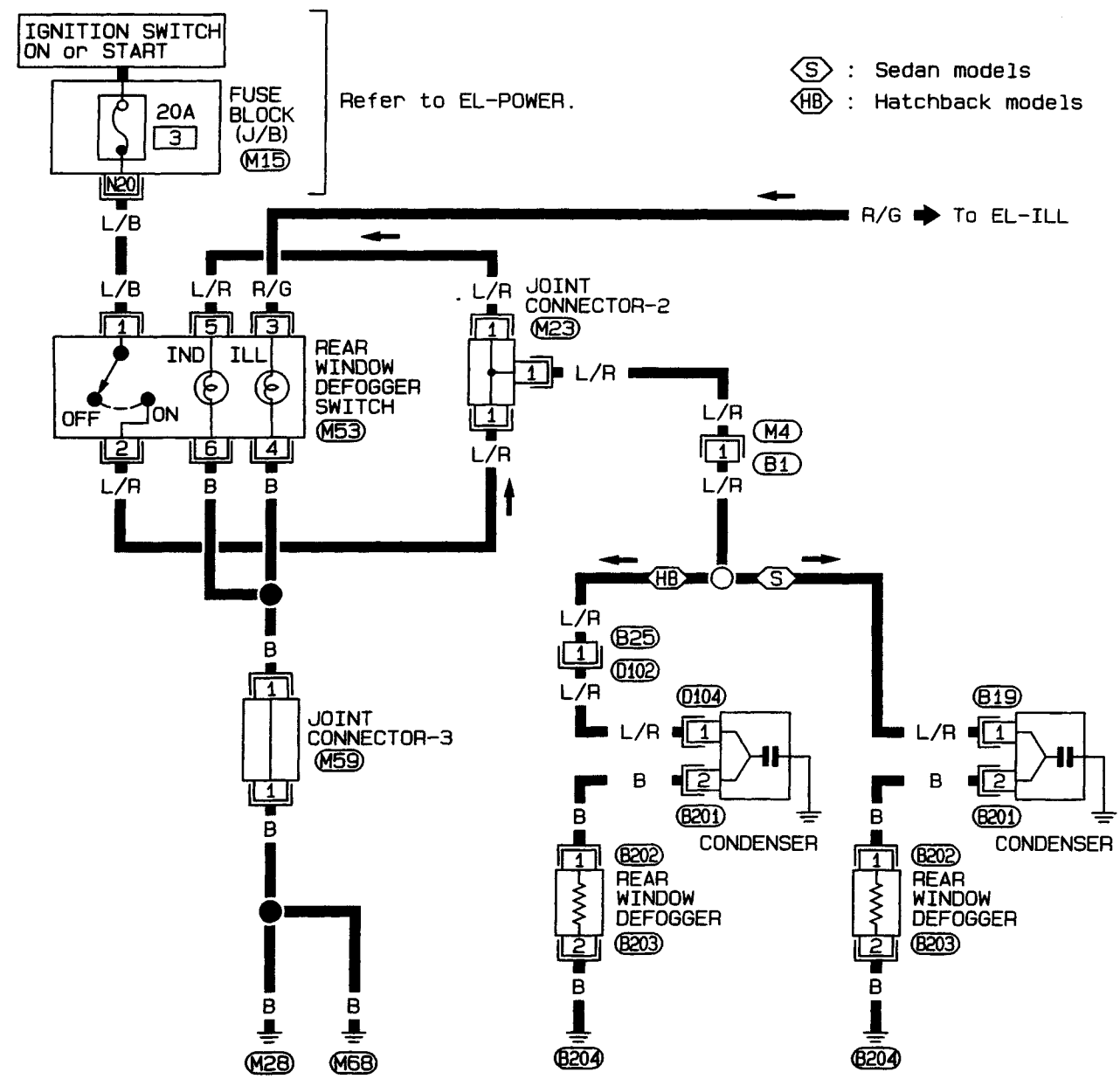

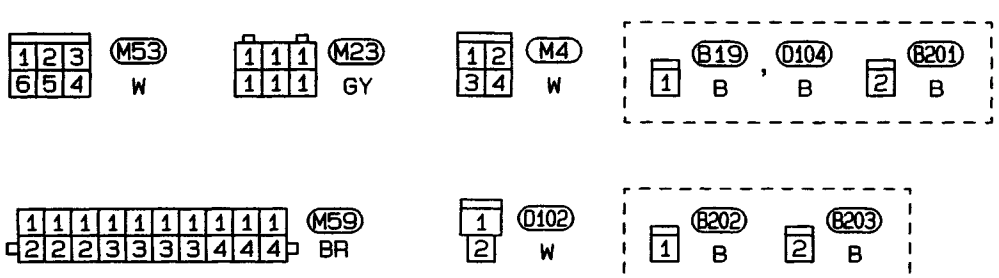

Refer to last page (Foldout page).

M15

EL

HEL138

Simpo PDF Merge and Split Unregistered Version - http://www.simpopdf.com

Wiring Diagram — DEF — (Cont'd)

RHD MODELS

EL-DEF-04

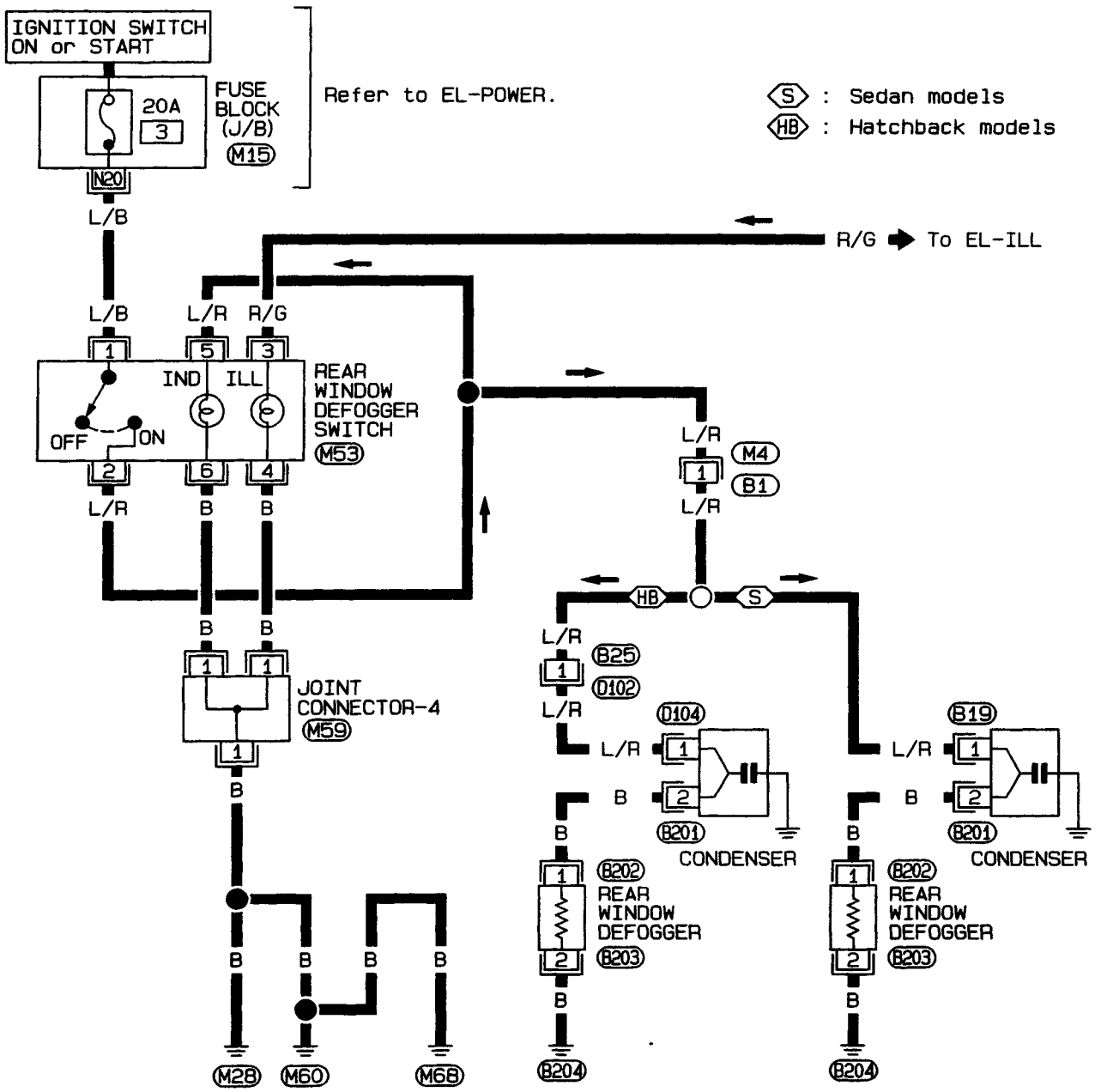

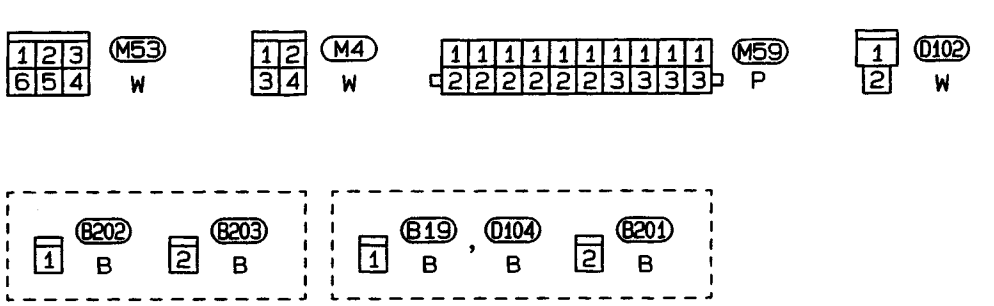

Refer to last page (Foldout page).

M15

HEL139

Simpo PDF Merge and Split Unregistered Version - http://www.simpopdf.com

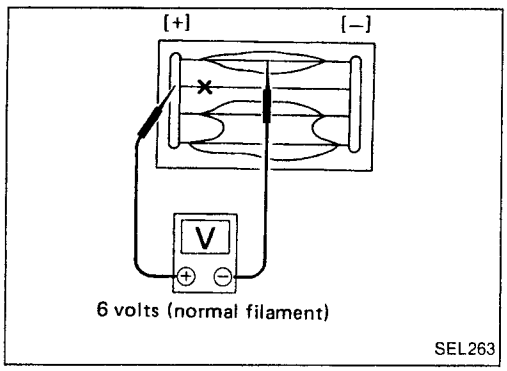

Filament Check

1. Attach probe circuit tester (in volt range) to middle portion of each filament.

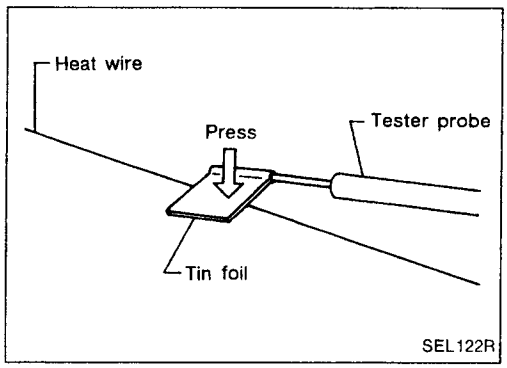

- **When measuring voltage, wrap tin foil around the top of the negative probe. Then press the foil against the wire with your finger.**

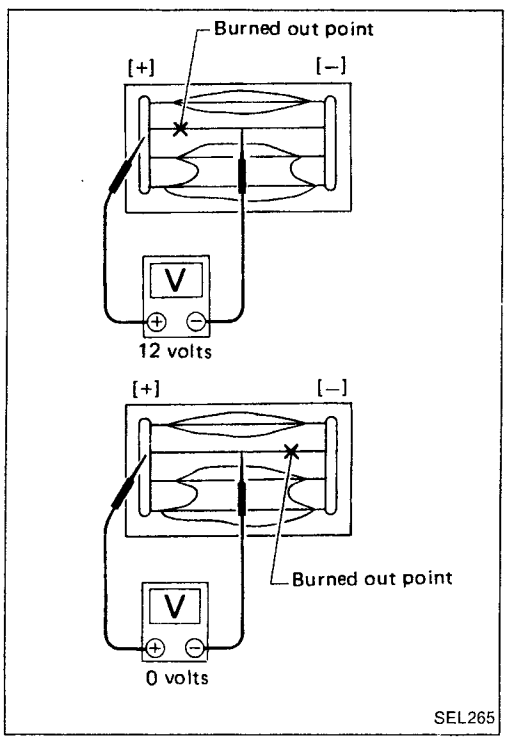

2. If a filament is burned out, circuit tester registers 0 or 12 volts.

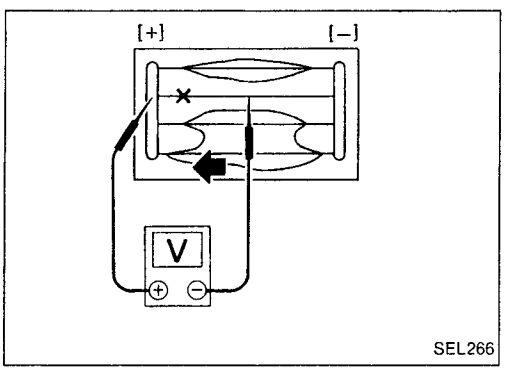

3. To locate burned out point, move probe along filament. Tester needle will swing abruptly when probe passes the point.

EL

Simpo PDF Merge and Split Unregistered Version - http://www.simpopdf.com

Filament Repair

REPAIR EQUIPMENT

1. Conductive silver composition (Dupont No. 4817 or equivalent)
2. Ruler 30 cm (11.8 in) long
3. Drawing pen
4. Heat gun
5. Alcohol
6. Cloth

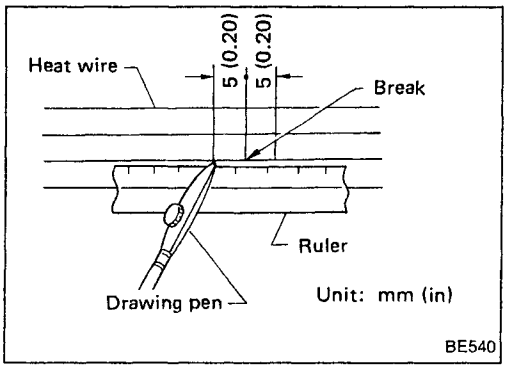

REPAIRING PROCEDURE

1. Wipe broken heat wire and its surrounding area clean with a cloth dampened in alcohol.
2. Apply a small amount of conductive silver composition to tip of drawing pen.

Shake silver composition container before use.

3. Place ruler on glass along broken line. Deposit conductive silver composition on break with drawing pen. Slightly overlap existing heat wire on both sides [preferably 5 mm (0.20 in)] of the break.
4. After repair has been completed, check repaired wire for continuity. This check should be conducted 10 minutes after silver composition is deposited.

Do not touch repaired area while test is being conducted.

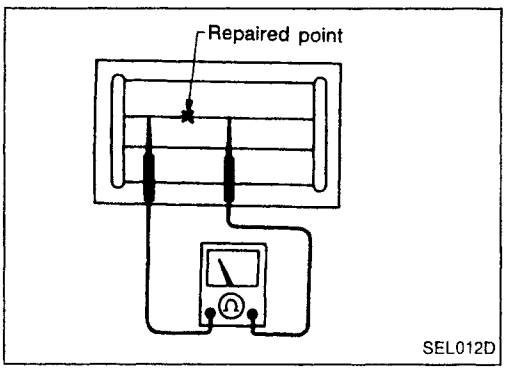

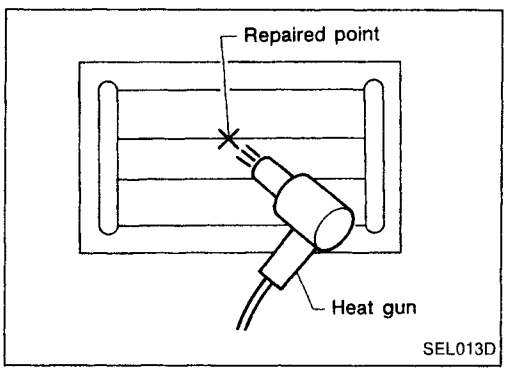

5. Apply a constant stream of hot air directly to the repaired area for approximately 20 minutes with a heat gun. A minimum distance of 3 cm (1.2 in) should be kept between repaired area and hot air outlet. If a heat gun is not available, let the repaired area dry for 24 hours.

Simpo PDF Merge and Split Unregistered Version - http://www.simpopdf.com

Audio/System Description

Refer to Owner's Manual for audio system operating instructions.

Power is supplied at all times
- through 7.5A fuse (No. 24, located in the fuse block)
- to radio terminal ⑥, and
- to compact disk deck terminal ㉔.

With the ignition switch in the ACC or ON position, power is supplied
- through 15A fuse (No. 10, located in the fuse block)
- to radio terminal ⑩, and
- to compact disk deck terminal ㉑.

Ground is supplied through the case of the radio.
When the radio power knob is pushed to the ON position, audio signals are supplied
- through radio terminals 1, 2, 3, 4, 13, 14, 15 and 16
- to the door, pillar and rear speakers.

Simpo PDF Merge and Split Unregistered Version - http://www.simpopdf.com

Wiring Diagram — AUDIO —

LHD MODELS

EL-AUDIO-01

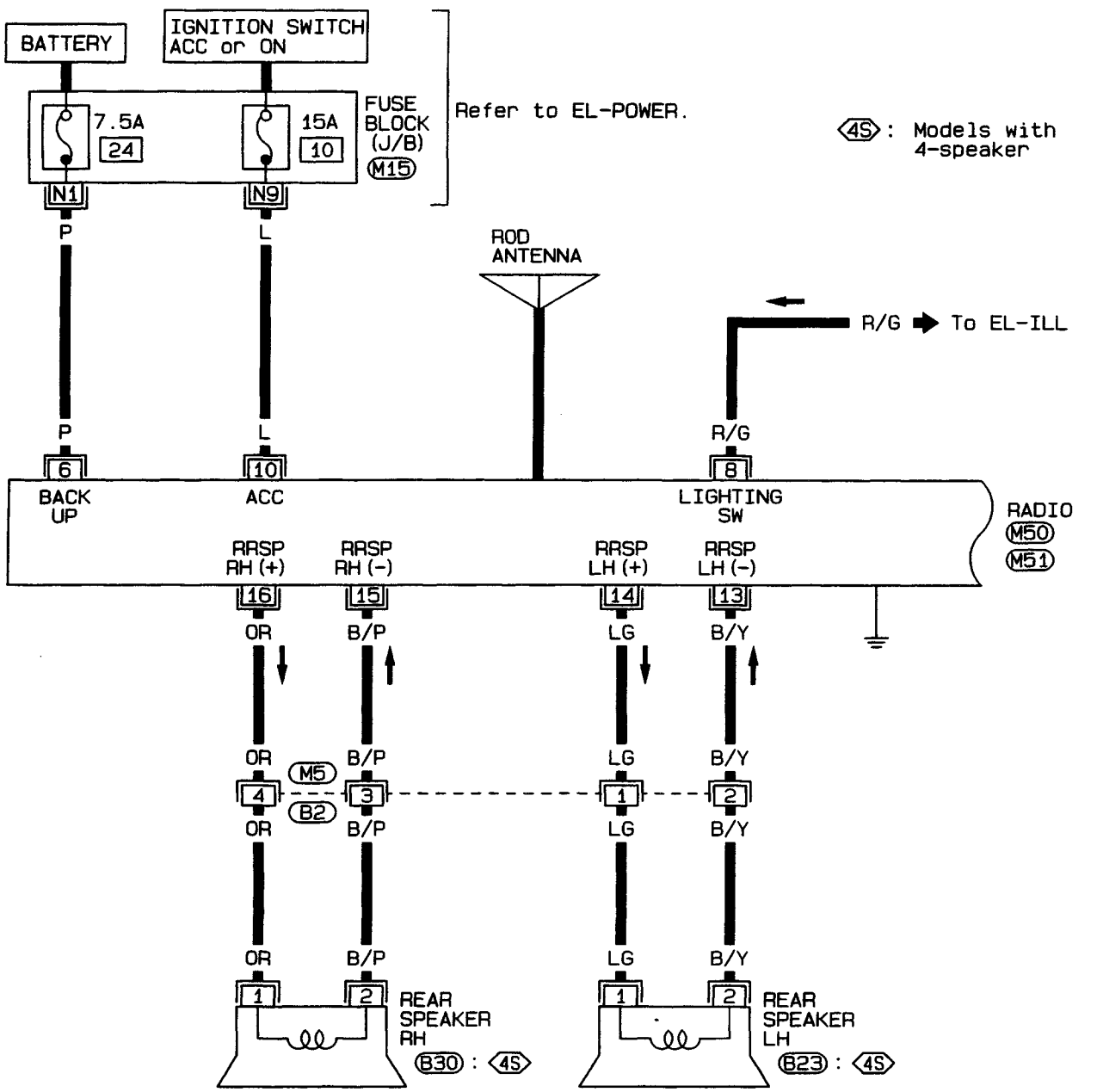

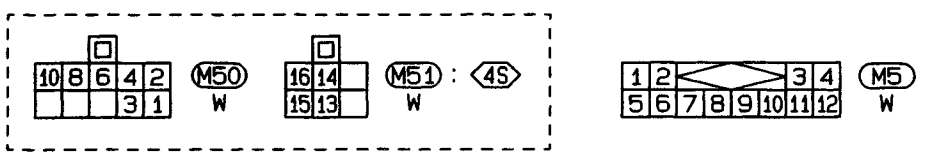

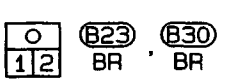

Refer to last page (Foldout page).

M15

HEL140

Simpo PDF Merge and Split Unregistered Version - http://www.simpopdf.com

Wiring Diagram — AUDIO — (Cont'd)

EL-AUDIO-02

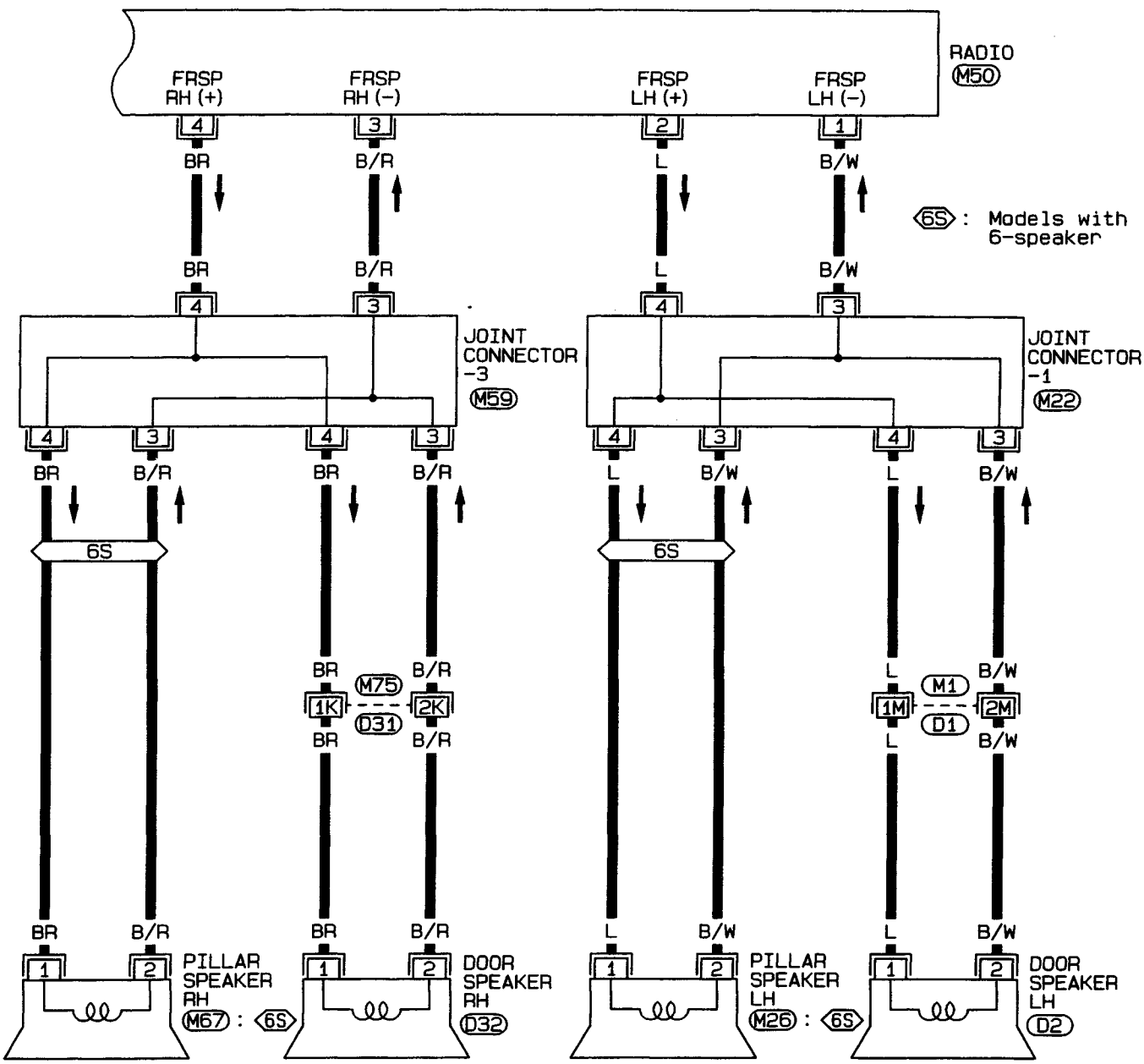

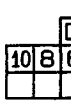

M50
W

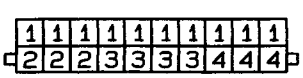

M22 , M59
BR , BR



M26 , M67 , D2 , D32
BR , BR , BR , BR

CAUTION : Don't attempt to repair, splice or modify the flexible flat circuit (FFC). If the FFC is damaged, replace with a new one.

Refer to last page (Foldout page).

M1 , D1
M75 , D31

EL

HEL141

Simpo PDF Merge and Split Unregistered Version - http://www.simpopdf.com

Wiring Diagram — AUDIO — (Cont'd)

RHD MODELS FOR EUROPE

EL-AUDIO-03

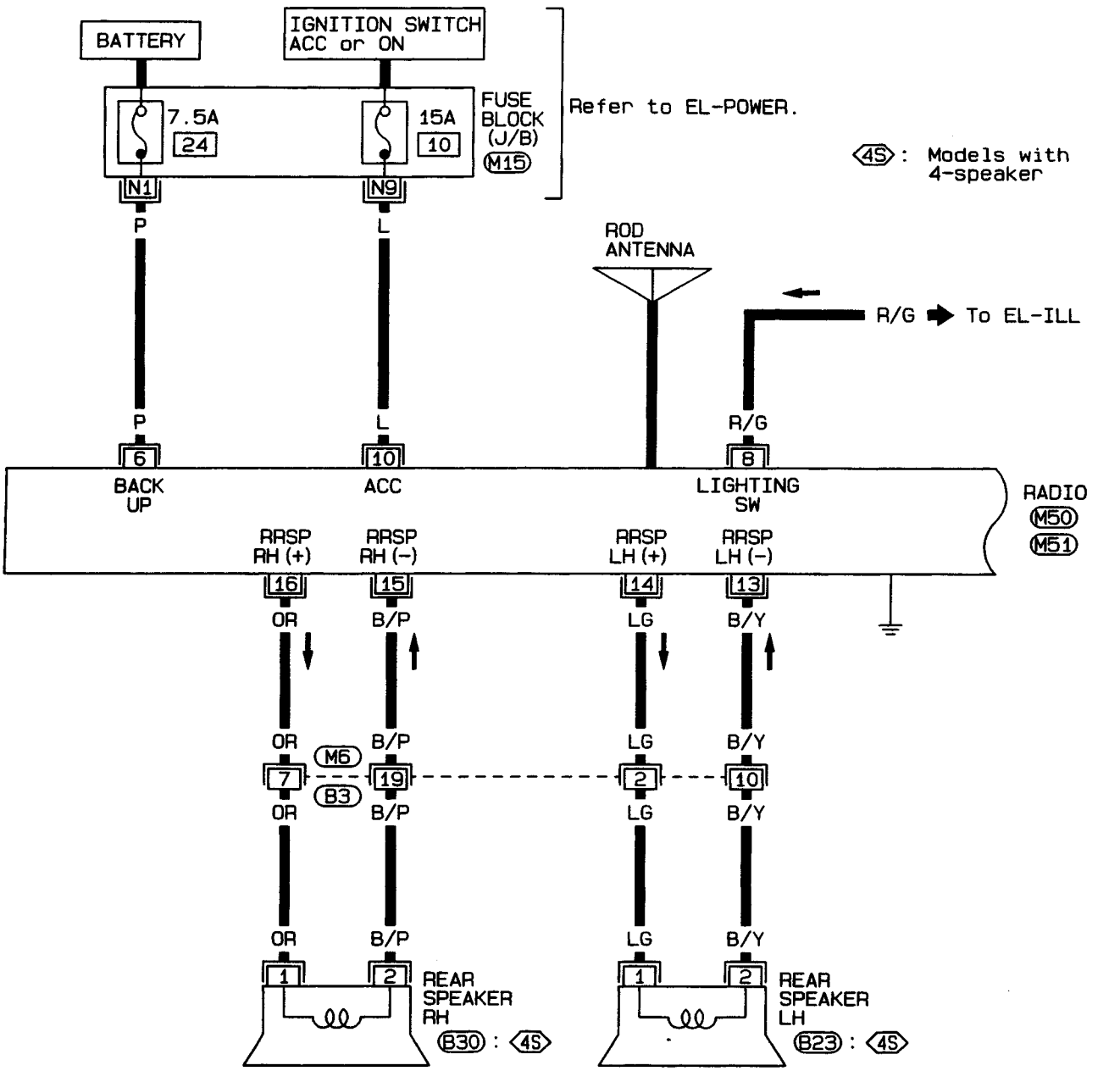

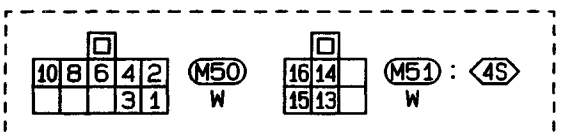

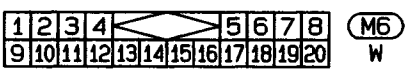

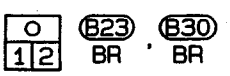

Refer to last page (Foldout page).

M15

HEL142

Simpo PDF Merge and Split Unregistered Version - http://www.simpopdf.com

Wiring Diagram — AUDIO — (Cont'd)

EL-AUDIO-04

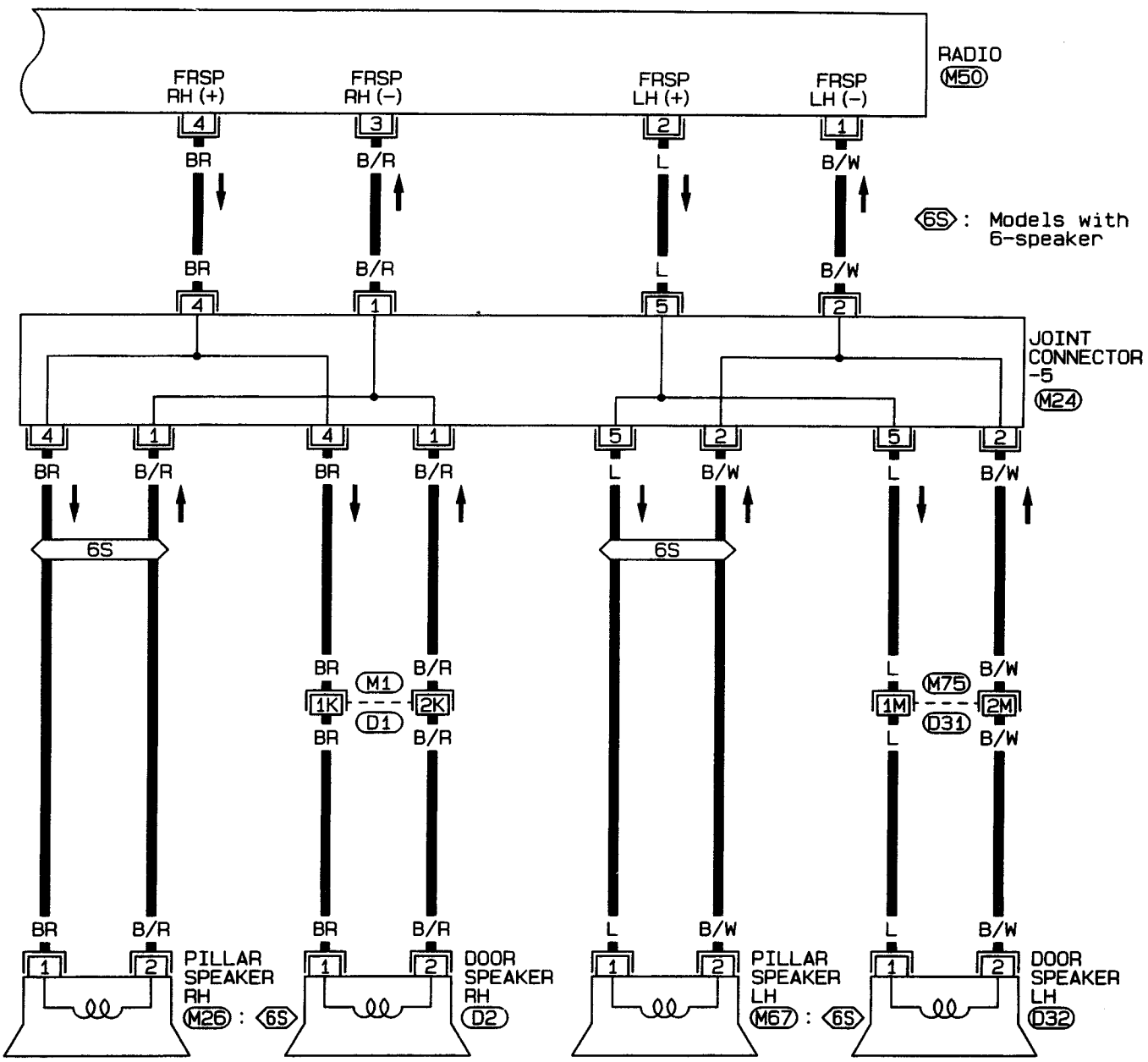

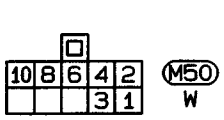

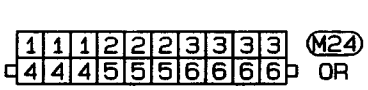



M26 , M67 , D2 , D32
BR , BR , BR , BR

CAUTION : Don't attempt to repair, splice or modify the flexible flat circuit (FFC). If the FFC is damaged, replace with a new one.

Refer to last page (Foldout page).

M1 , D1
M75 , D31

EL

HEL143

Simpo PDF Merge and Split Unregistered Version - http://www.simpopdf.com

Wiring Diagram — AUDIO — (Cont'd)

RHD MODELS EXCEPT FOR EUROPE

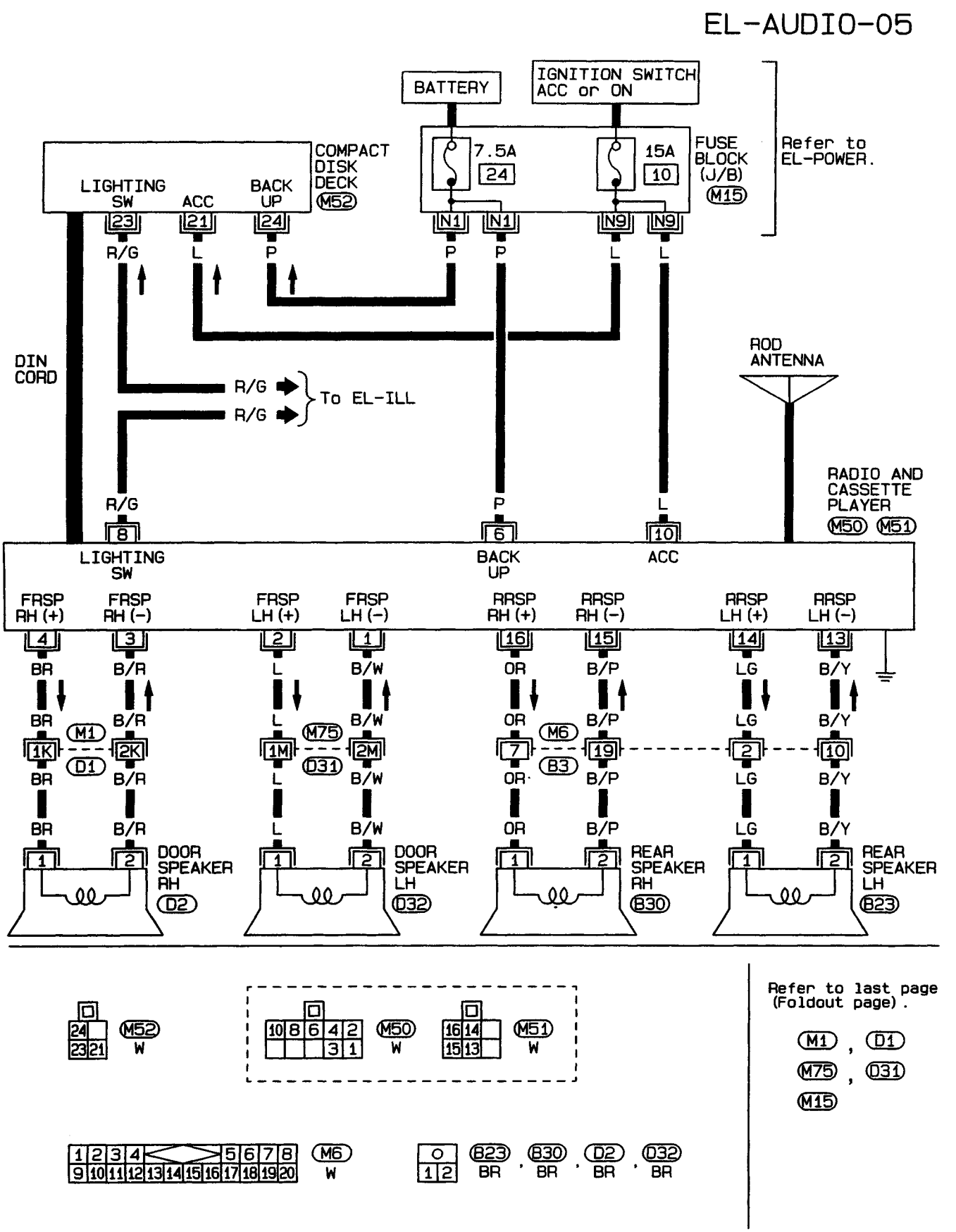

Simpo PDF Merge and Split Unregistered Version - http://www.simpopdf.com

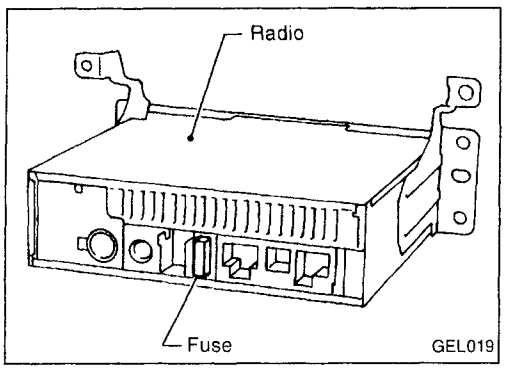

Radio Fuse Check

Location of Antenna

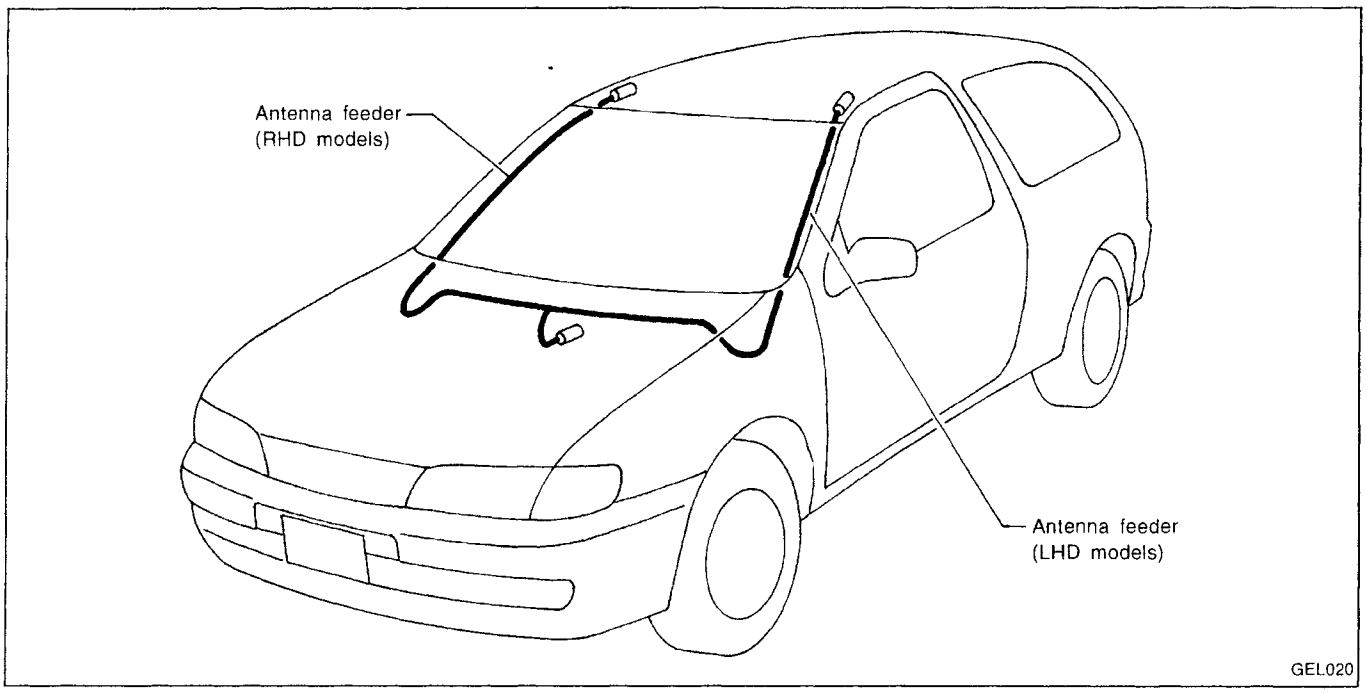

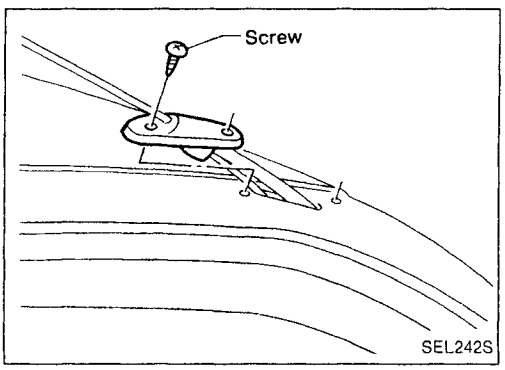

Antenna Rod Replacement

1. Loosen screws securing antenna base.

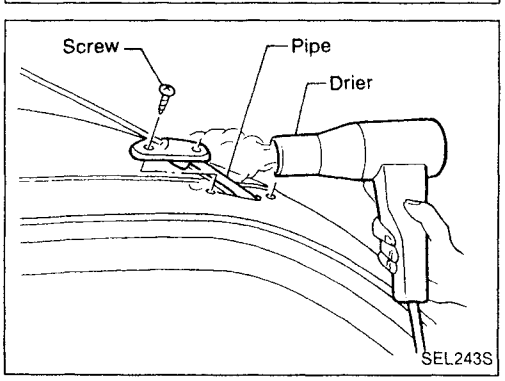

2. Pull out pipe from antenna base.
   Heating the pipe with a drier makes it easier.

EL

Simpo PDF Merge and Split Unregistered Version - http://www.simpopdf.com

Antenna Rod Replacement (Cont'd)

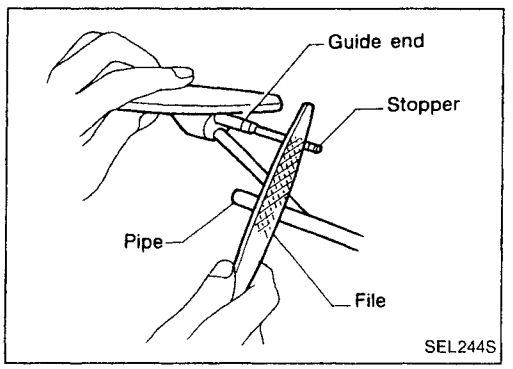

3. Cut off stopper at end of antenna rod using a file.
4. Pull out antenna rod from antenna base.

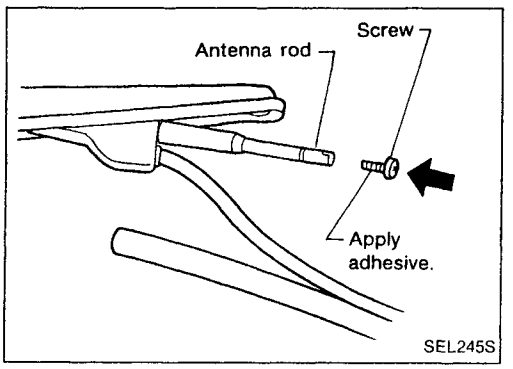

5. Insert new antenna rod to antenna base.
6. Apply adhesive to screw thread and tighten screw.

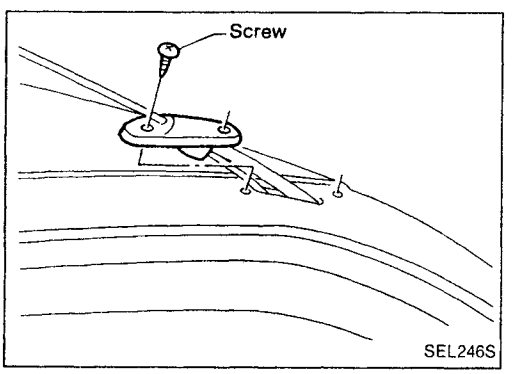

7. Tighten screws to antenna base.

Simpo PDF Merge and Split Unregistered Version - http://www.simpopdf.com

★ For location of heating unit, refer to "SEAT" in BT section.

Wiring Diagram — H/SEAT —

EL-H/SEAT-01

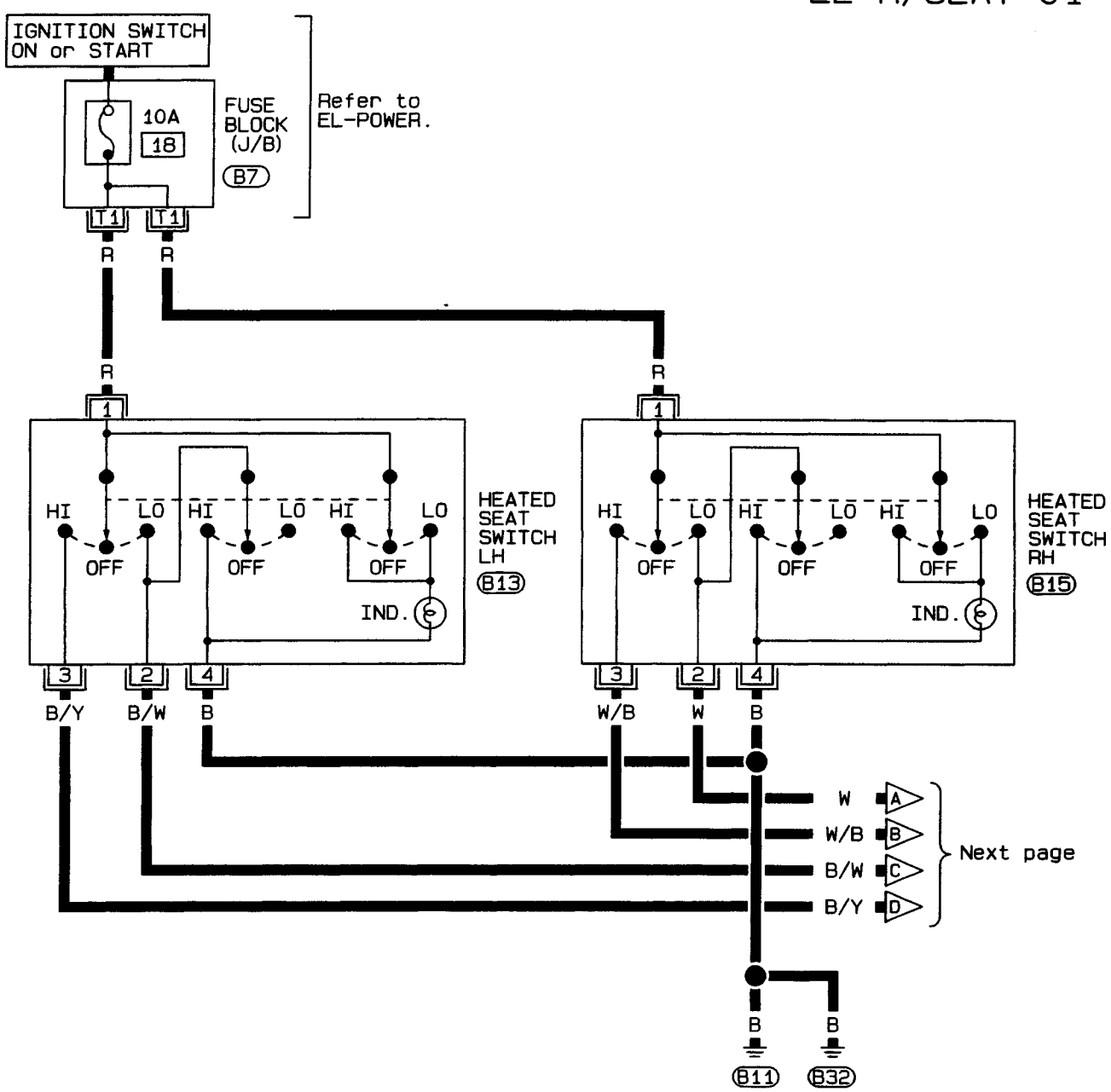

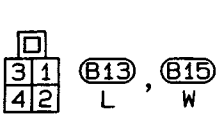

Refer to last page
(Foldout page).

B7

EL

HEL145

Simpo PDF Merge and Split Unregistered Version - http://www.simpopdf.com

Wiring Diagram — H/SEAT — (Cont'd)

EL-H/SEAT-02

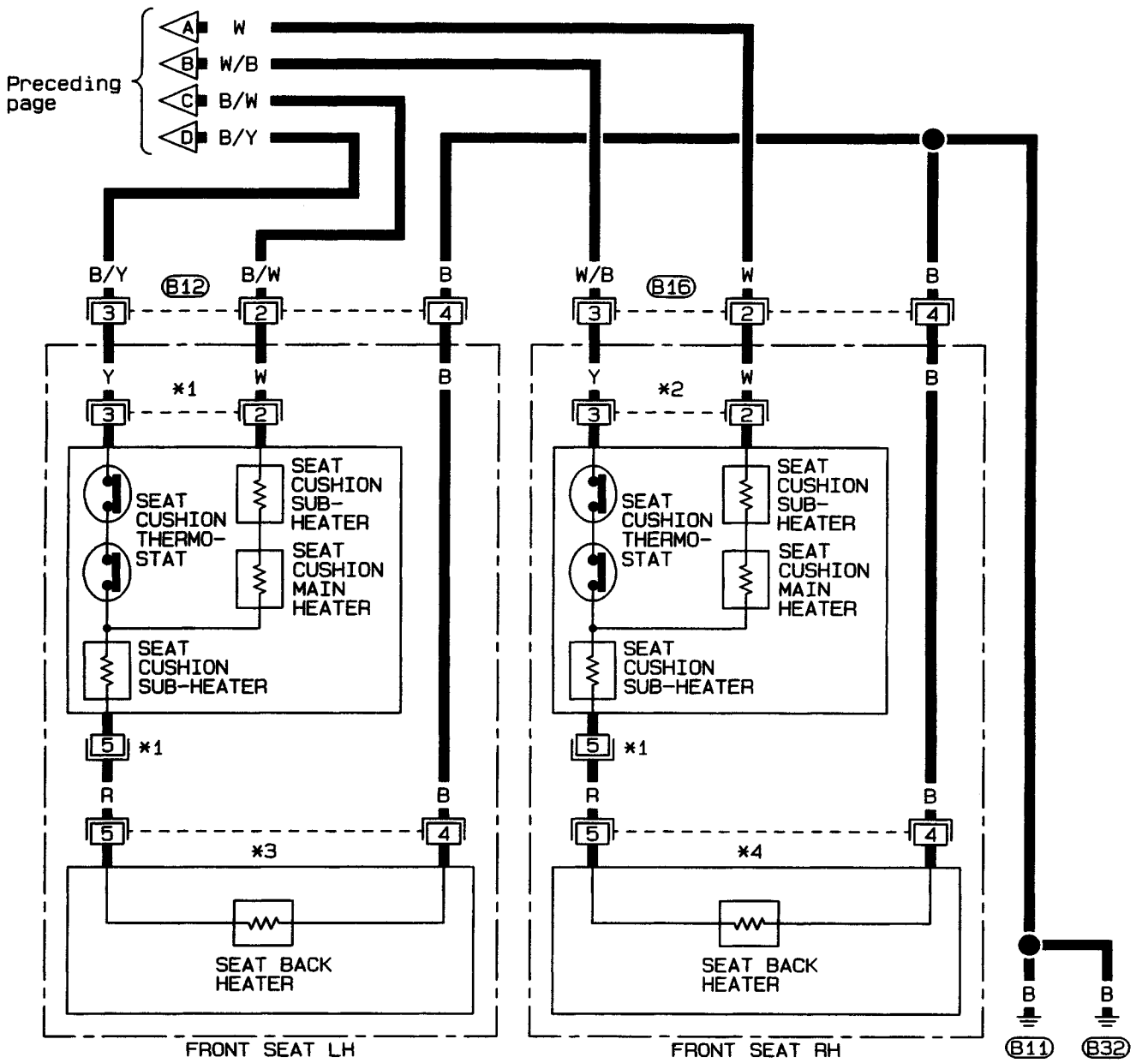

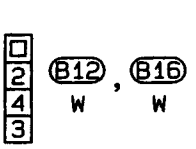

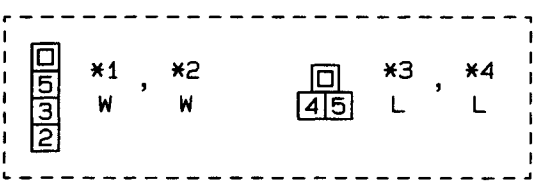

HEL146

Simpo PDF Merge and Split Unregistered Version - http://www.simpopdf.com

System Description

NATS V2.0 for Nissan model N15 has the following immobiliser functions:

- Since only NATS ignition keys, whose ID nos. have been registered into the ECM and IMMU of NATS, allow the engine to run, operation of a stolen vehicle without a NATS registered key is prevented by NATS.
  That is to say, NATS V2.0 will immobilize the engine if someone tries to start it without the registered key of NATS V2.0.
- Both of the originally supplied ignition key IDs have been NATS registered.
  If requested by the vehicle owner, a maximum of four key IDs can be registered into the NATS components.
- The NATS security indicator (NATS security ind.) blinks when the ignition switch is in "OFF" or "ACC" position. Therefore, NATS warns outsiders that the vehicle is equipped with the anti-theft system.
- When NATS detects trouble, the malfunction indicator lamp (MIL) blinks.
- NATS trouble diagnoses, system initialisation and additional registration of other NATS ignition key IDs must be carried out using CONSULT hardware and CONSULT NATS software.
  When NATS initialisation has been completed, the ID of the inserted ignition key is automatically NATS registered. Then, if necessary, additional registration of other NATS ignition key IDs can be carried out.
  Regarding the procedures of NATS initialisation and NATS ignition key ID registration, refer to CONSULT operation manual, NATS V2.0.
- When diagnosing NATS V2.0 using CONSULT, adapter and adapter harness for NATS V1.0 are not necessary, although a direct DDL cable connection between CONSULT and DDL connector is required.
- When servicing a malfunction of the NATS V2.0 (indicated by flashing of Malfunction Indicator Lamp) or registering another NATS ignition key ID no., it may be necessary to re-register original key identification. Therefore, be sure to receive all keys from vehicle owner.

System Composition

The immobiliser function of the NATS for Nissan model N15 consists of the following:

- NATS ignition key
- NATS antenna amp. located in the ignition key cylinder
- NATS immobiliser control unit (NATS IMMU)
- Engine control module (ECM)
- NATS security indicator located under the center cluster (NATS security ind.)
- Malfunction indicator lamp (MIL)

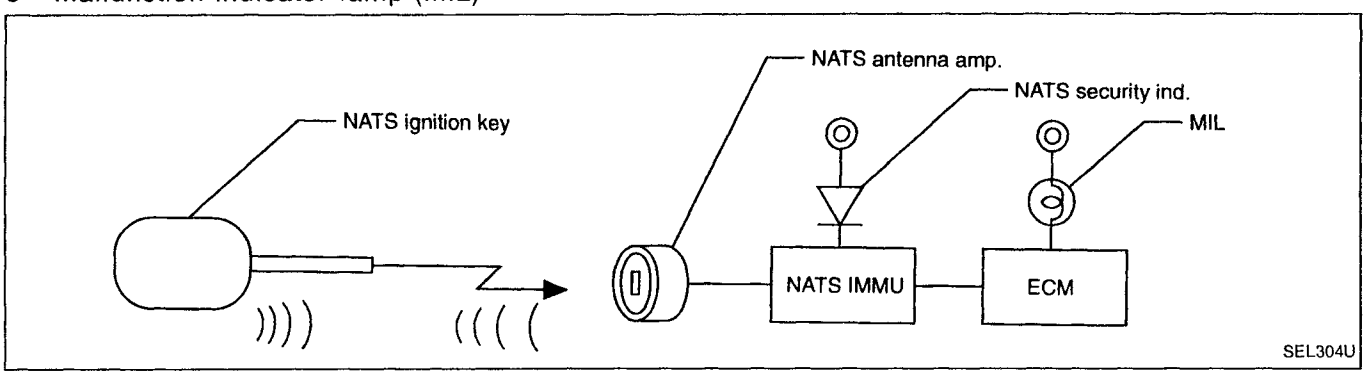

EL

Simpo PDF Merge and Split Unregistered Version - http://www.simpopdf.com

Component Parts Location

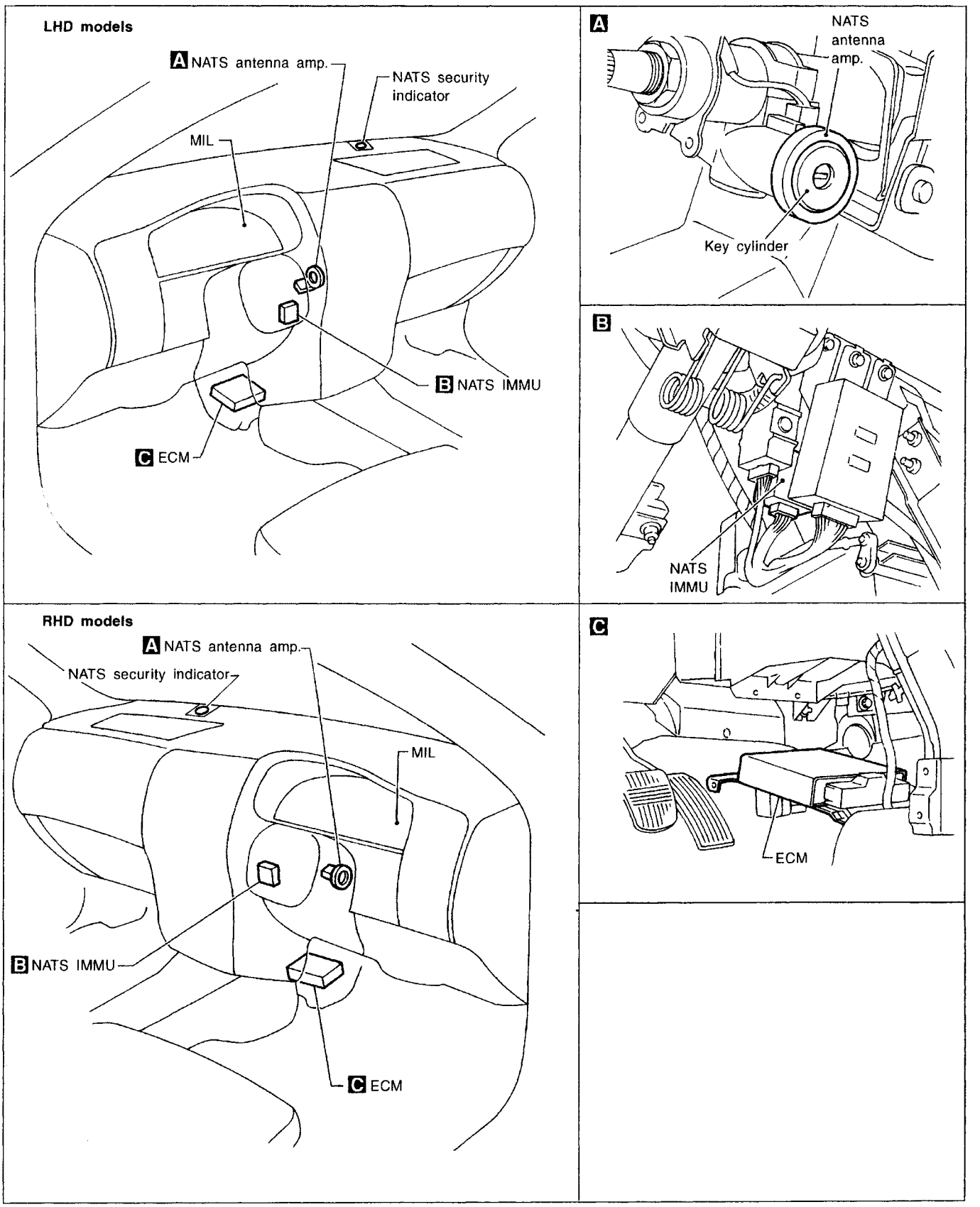

GEL021

Simpo PDF Merge and Split Unregistered Version - http://www.simpopdf.com

Wiring Diagram — NATS —

LHD MODELS

EL-NATS-01

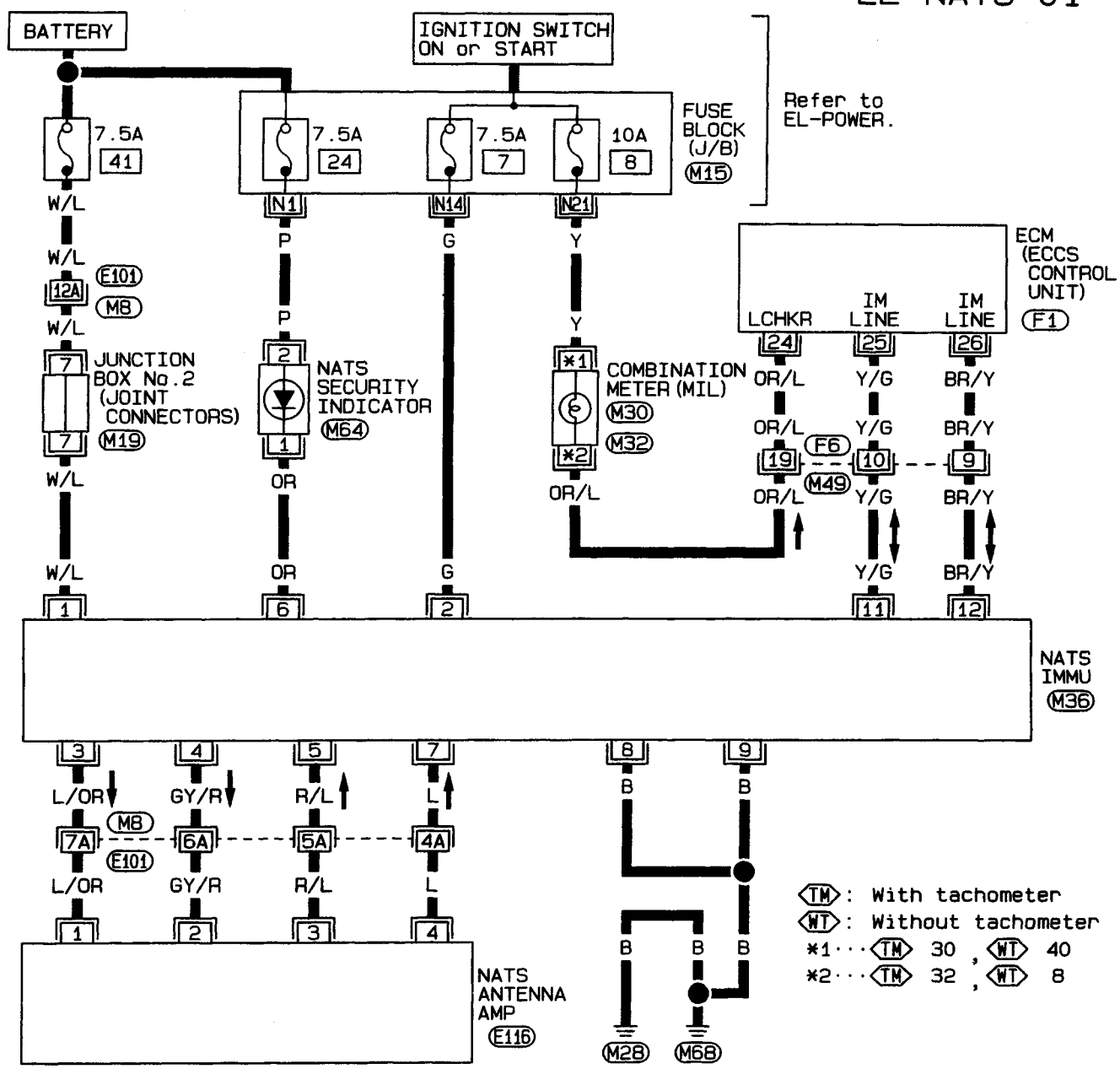

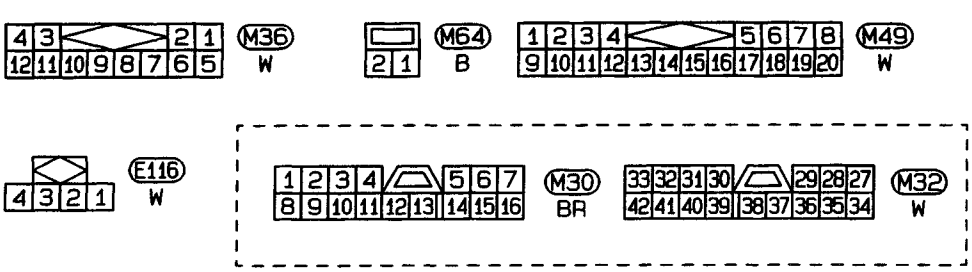

Refer to last page (Foldout page).

M8 , E101
M15
M19
F1

HEL147

Simpo PDF Merge and Split Unregistered Version - http://www.simpopdf.com

Wiring Diagram — NATS — (Cont'd)

RHD MODELS

EL-NATS-02

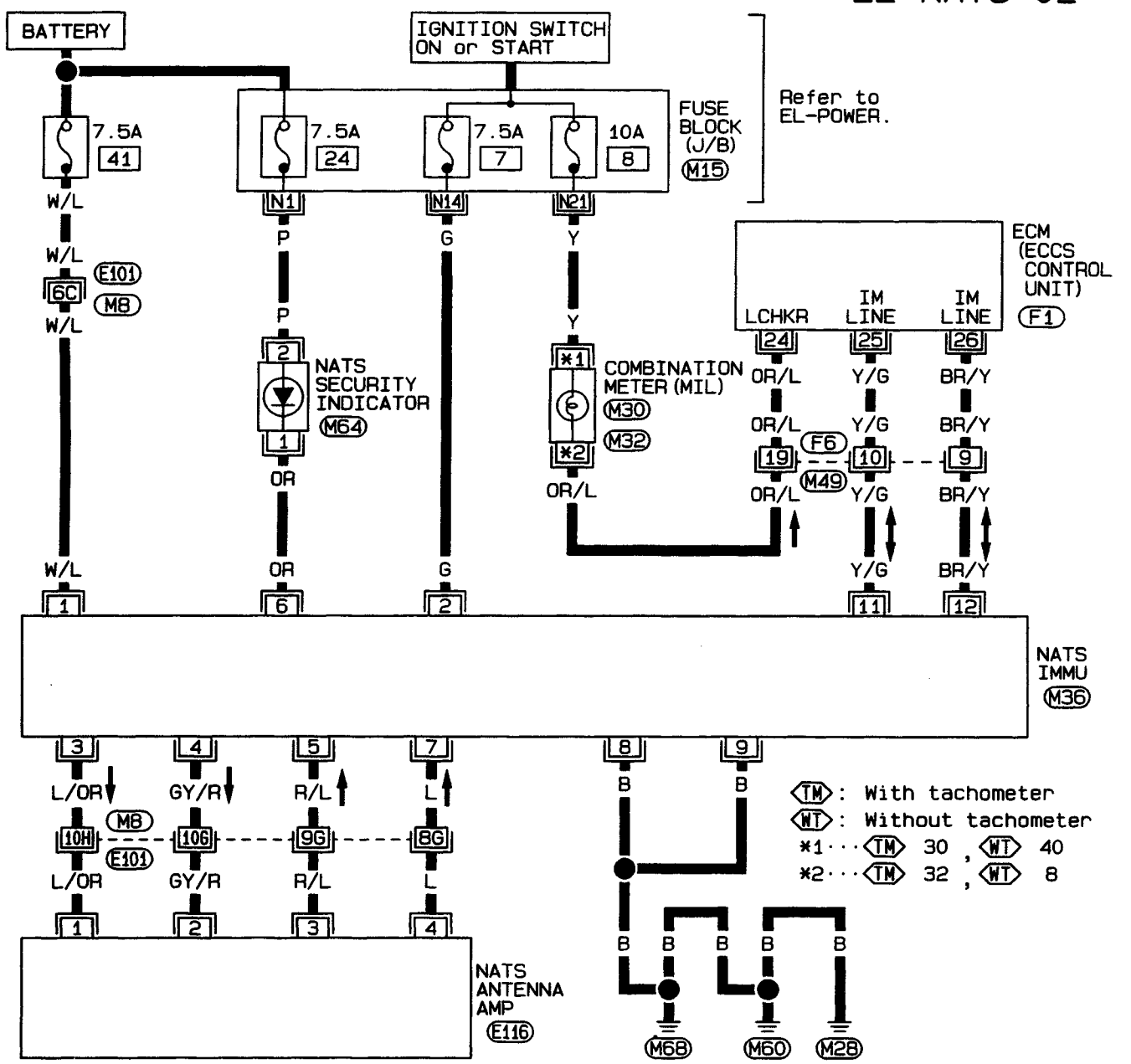

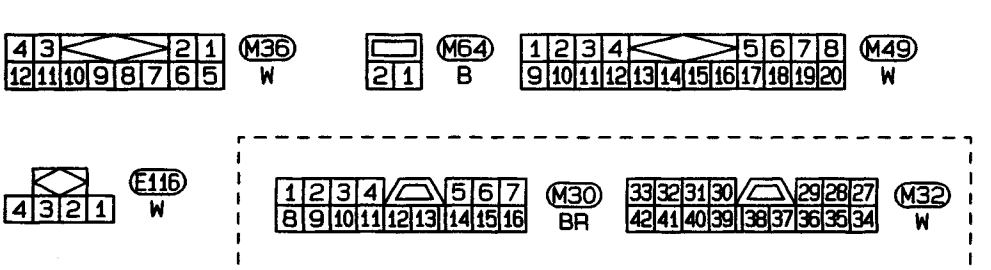

Refer to last page (Foldout page).

M8 , E101
M15
F1

HEL148

Simpo PDF Merge and Split Unregistered Version - http://www.simpopdf.com

Trouble Diagnoses

WORK FLOW

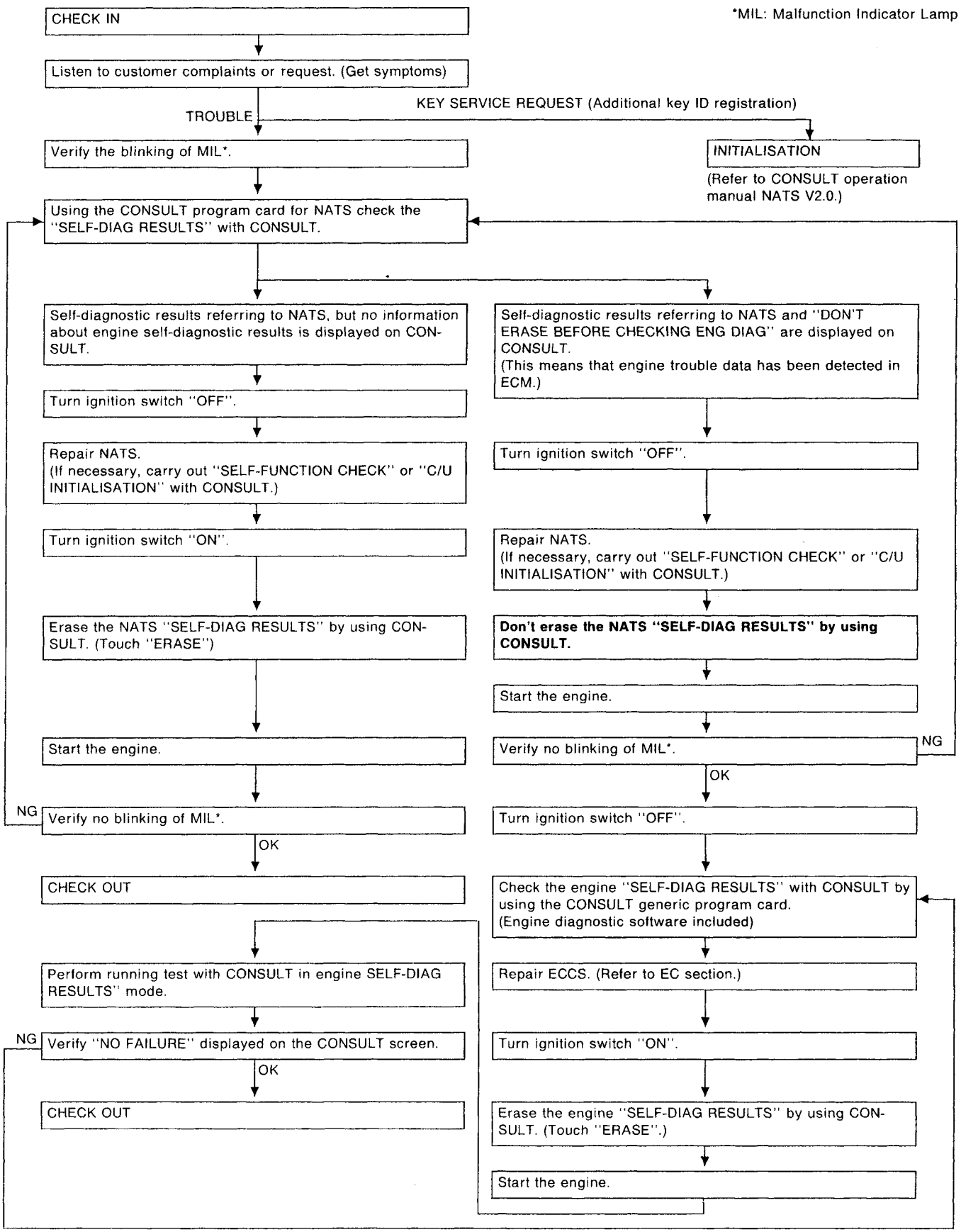

EL

Simpo PDF Merge and Split Unregistered Version - http://www.simpopdf.com

Trouble Diagnoses (Cont'd)

CONSULT INSPECTION PROCEDURE

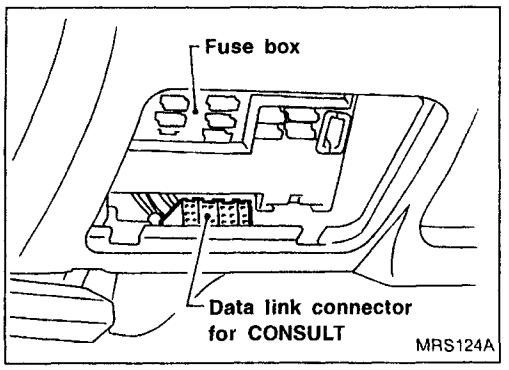

1. Turn off ignition switch.
2. Connect "CONSULT" to Data link connector for CONSULT. (Data link connector for CONSULT is located behind the fuse box cover.)

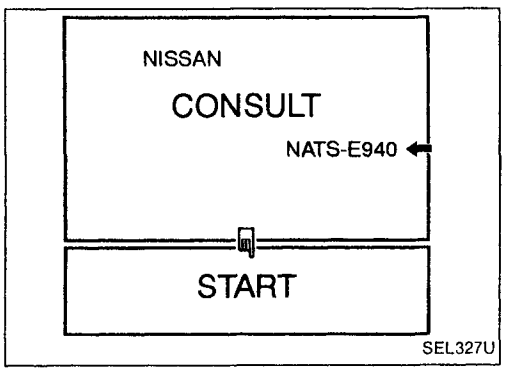

3. Insert NATS program card into CONSULT.

⬅: Program card
NATS-E940

4. Turn on ignition switch.
5. Touch "START".

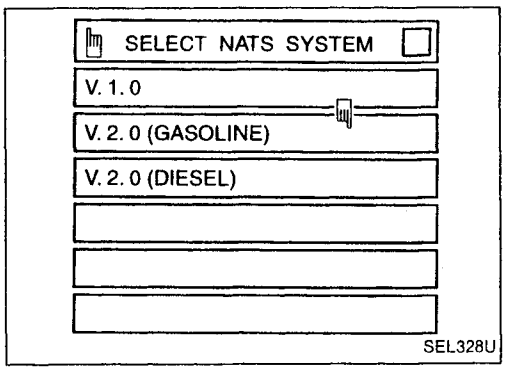

6. Touch "V.2.0 (GASOLINE)".

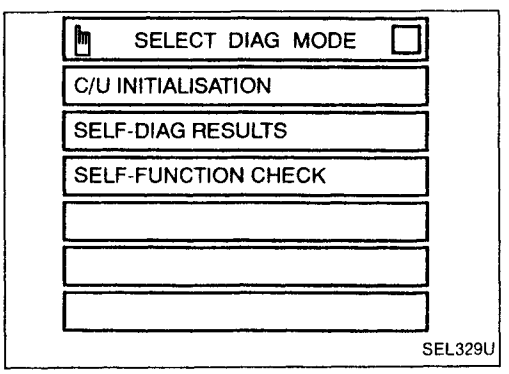

7. Perform each diagnostic test mode according to each service procedure.

For further information, see the CONSULT Operation Manual, NATS V2.0.

Simpo PDF Merge and Split Unregistered Version - http://www.simpopdf.com

Trouble Diagnoses (Cont'd)

HOW TO READ SELF-DIAGNOSTIC RESULTS

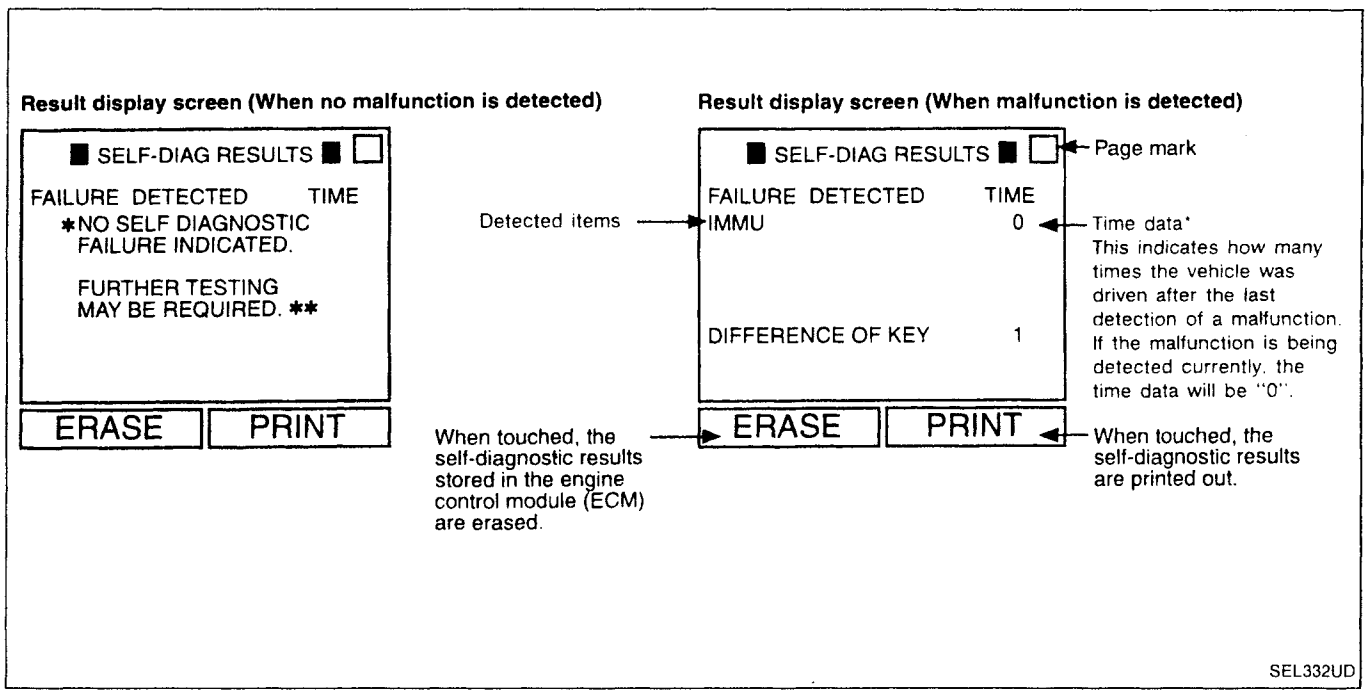

* If trip number is more than 1, MIL does not blink.

EL

Simpo PDF Merge and Split Unregistered Version - http://www.simpopdf.com

Trouble Diagnoses (Cont'd)

CONSULT DIAGNOSTIC TEST MODE FUNCTION

CONSULT DIAGNOSTIC TEST MODE	Description
C/U INITIALIZATION	When replacing any of the following three components, C/U initialization is necessary. [NATS ignition key/IMMU/ECM]
SELF-FUNCTION CHECK	ECM checks its own NATS communication interface by itself.
SELF-DIAGNOSTIC RESULTS	Detected items (screen terms) are as shown in the chart below.

SELF-DIAGNOSTIC RESULTS ITEM CHART

Detected items (Screen terms)	Description	Reference page
IMMU	ECM received the signal from IMMU that IMMU is malfunctioning.	EL-257
ECM	ECM is malfunctioning.	EL-257
CHAIN OF ECM-IMMU	Communication impossible between ECM and IMMU.	EL-258
DIFFERENCE OF KEY	IMMU can receive the key ID signal but the result of ID verification between key ID and IMMU is NG.	EL-260
CHAIN OF IMMU-KEY	IMMU cannot receive the key ID signal.	EL-261
ID DISCORD, IMM-ECM	The result of ID verification between IMMU and ECM is NG. System initialisation is required.	EL-263
MINGLE NOISE	Noise (interference) mingled into NATS communication lines during communicating.	EL-264
DON'T ERASE BEFORE CHECKING ENG DIAG	Engine trouble data and NATS trouble data have been detected in ECM.	EL-264

Simpo PDF Merge and Split Unregistered Version - http://www.simpopdf.com

Trouble Diagnoses (Cont'd)

SYMPTOM MATRIX CHART 1 (Self-diagnosis related item)

X: Possibility item, *MIL: Malfunction Indicator Lamp

SYSTEM (Malfunctioning part or mode)	REFERENCE PART NO. OF ILLUSTRATION ON NEXT PAGE	SYMPTOM		Displayed "SELF-DIAG RESULTS" on CONSULT screen.	DIAGNOSTIC PROCEDURE (Reference page)
		• Blinking of MIL*. • Engine will start.	• Blinking of MIL*. • Hard to start engine.		
IMMU	A	X		IMMU	PROCEDURE 1 (EL-257)
ECM	B	X		ECM	PROCEDURE 2 (EL-257)
Open circuit in battery voltage line of IMMU circuit	C1		X	CHAIN OF ECM-IMMU	PROCEDURE 3 (EL-258)
Open circuit in ignition line of IMMU circuit	C2		X		
Open circuit in ground line of IMMU circuit	C3		X		
Open circuit in communication line between IMMU and ECM	C4		X		
Short circuit between IMMU and ECM communication line and battery voltage line	C4		X		
Short circuit between IMMU and ECM communication line and ground line	C4		X		
Open circuit in power source line of ANT/AMP circuit	E3		X		
ECM	B		X		
IMMU	A		X		
Unregistered key	D		X	DIFFERENCE OF KEY	PROCEDURE 4 (EL-260)
IMMU	A		X		
Communication line between ANT/AMP and IMMU: Open circuit or short circuit of battery voltage line or short circuit of ground line	E1		X	CHAIN OF IMMU-KEY	PROCEDURE 5 (EL-261)
	E2		X		
Open circuit in power source line of ANT/AMP circuit	E3		X		
Open circuit in ground line of ANT/AMP circuit	E4		X		
Malfunction of key ID chip	E5		X		
IMMU	A		X		
Antenna amp.	E6		X		

EL

Simpo PDF Merge and Split Unregistered Version - http://www.simpopdf.com

Trouble Diagnoses (Cont'd)

SYSTEM (Malfunctioning part or mode)	REFERENCE PART NO. OF ILLUSTRATION ON NEXT PAGE	SYMPTOM		Displayed "SELF-DIAG RESULTS" on CONSULT screen.	DIAGNOSTIC PROCEDURE (Reference page)
		• Blinking of MIL*. • Engine will start.	• Blinking of MIL*. • Hard to start engine.		
System initialisation has not yet been completed.	F		X	ID DISCORD, IMM-ECM	PROCEDURE 6 (EL-263)
ECM	F		X		
Noise interference in communication line			X	MINGLE NOISE	PROCEDURE 7 (EL-264)
Engine trouble data and NATS trouble data have been detected in ECM		X	X	DON'T ERASE BEFORE CHECKING ENG DIAG	WORK FLOW (EL-251)

SYMPTOM MATRIX CHART 2
(Non self-diagnosis related item)

X: Possibility item

SYSTEM (Malfunctioning part or mode)	SYMPTOM	DIAGNOSTIC PROCEDURE (Reference page)
	NATS security ind. does not light up.	
NATS security ind.	X	PROCEDURE 8 (EL-264)
Open circuit between Fuse and NATS IMMU		
Continuation of initialisation mode		
NATS IMMU		

DIAGNOSTIC SYSTEM DIAGRAM

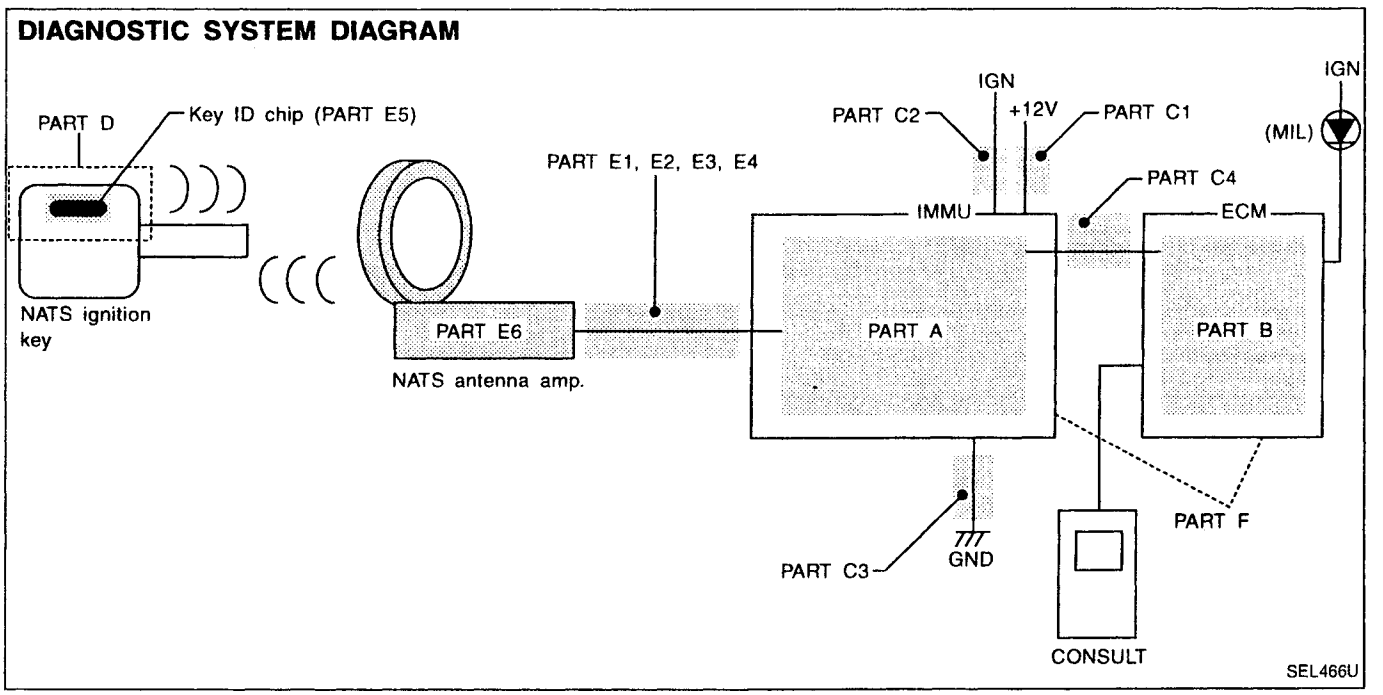

Simpo PDF Merge and Split Unregistered Version - http://www.simpopdf.com

Trouble Diagnoses (Cont'd)

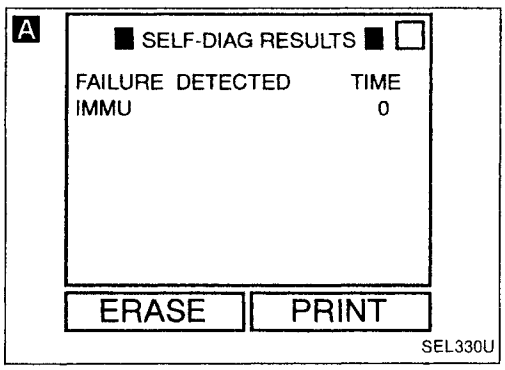

DIAGNOSTIC PROCEDURE 1

Self-diagnostic results:
"IMMU" displayed on CONSULT screen

A

Confirm SELF-DIAGNOSTIC RESULTS "IMMU" displayed on CONSULT screen.
Ref. part No.* A.

↓ Yes

Replace IMMU.

↓

Perform initialisation with CONSULT.
For the operation of initialisation, refer to "CONSULT operation manual NATS V2.0".

* Ref. part No.: reference part No. of Diagnostic System Diagram on EL-255

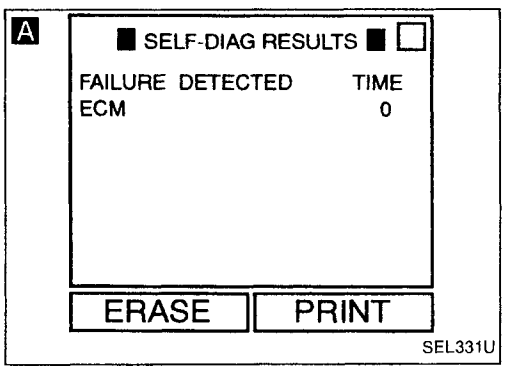

DIAGNOSTIC PROCEDURE 2

Self-diagnostic results:
"ECM" displayed on CONSULT screen

A

Confirm SELF-DIAGNOSTIC RESULTS "ECM" displayed on CONSULT screen.
Ref. part No. B.

↓

Replace ECM.

↓

Perform initialisation with CONSULT.
For the operation of initialisation, refer to "CONSULT operation manual NATS V2.0".

EL

Simpo PDF Merge and Split Unregistered Version - http://www.simpopdf.com

Trouble Diagnoses (Cont'd)

DIAGNOSTIC PROCEDURE 3

Self-diagnostic results:
"CHAIN OF ECM-IMMU" displayed on CONSULT screen

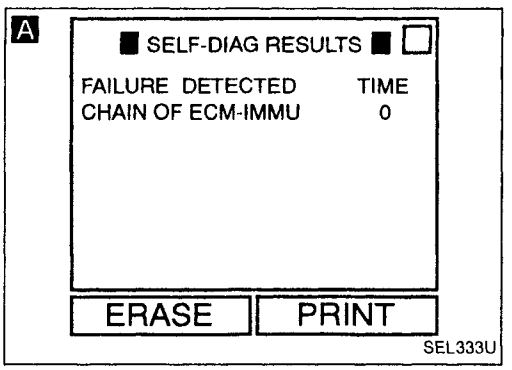

A

Confirm SELF-DIAGNOSTIC RESULTS "CHAIN OF ECM-IMMU" displayed on CONSULT screen.

OK ↓

B

Check voltage between terminal ① of IMMU and ground with CONSULT or tester.
Voltage: Battery voltage

NG → Check the following:
- 7.5A fuse
- Harness continuity between fuse and IMMU connector (M36)

If NG, repair harness or connector.
Ref. part No. C1

OK ↓

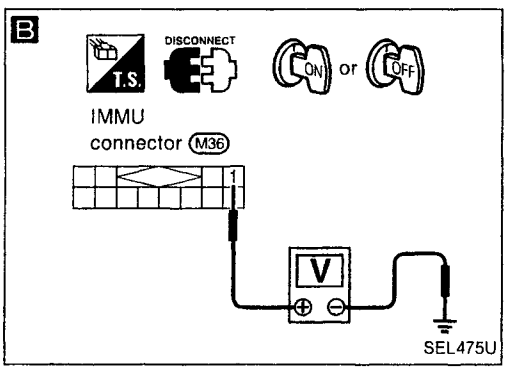

C

Check voltage between terminal ② of IMMU and ground with CONSULT or tester.
Voltage: Battery voltage

NG → Check the following:
- 7.5A fuse
- Harness continuity between fuse and IMMU connector (M36), or between ignition switch and fuse.

If NG, repair harness or connectors.
Ref. part No. C2

OK ↓

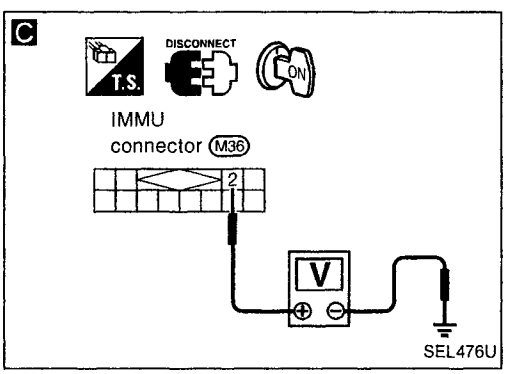

D

Check harness continuity between IMMU terminal ⑧ or ⑨ and ground.
Continuity should exist.

NG → Repair harness or check the body ground screws (M28), (M60) and (M68).
Ref. part No. C3

OK ↓

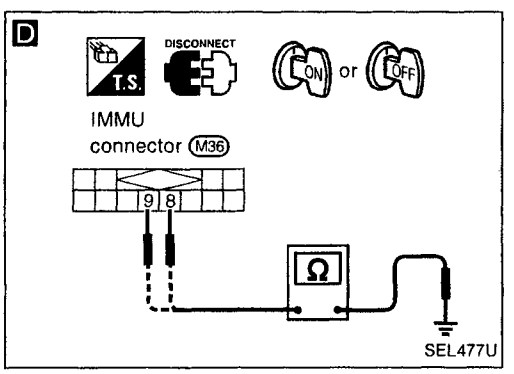

E

Check harness continuity between the following ECM terminals and IMMU terminals.
ECM ㉕ and IMMU ⑪
ECM ㉖ and IMMU ⑫
Continuity should exist.

NG → Check the following.
- Harness connectors (M49), (F6)
- Harness continuity between ECM and IMMU.

If NG, repair harness or connectors.
Ref. part No. C4

OK ↓

Ⓐ

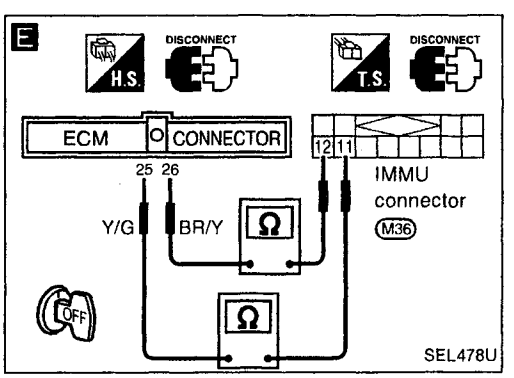

Simpo PDF Merge and Split Unregistered Version - http://www.simpopdf.com

Trouble Diagnoses (Cont'd)

F

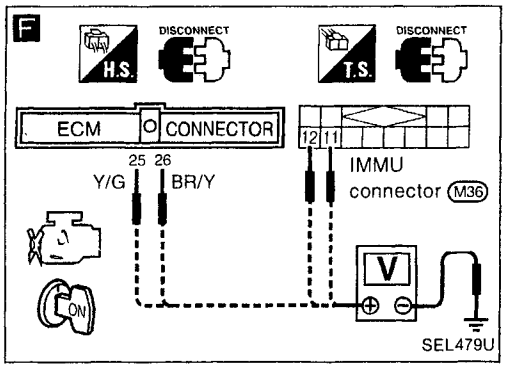

G

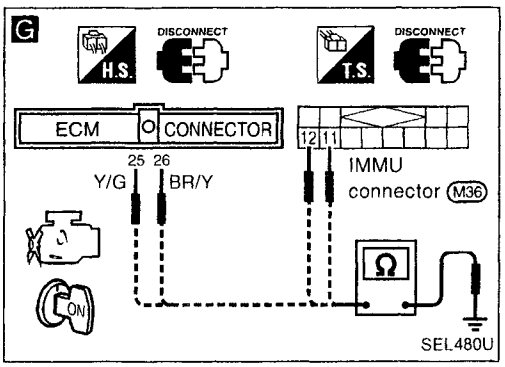

H

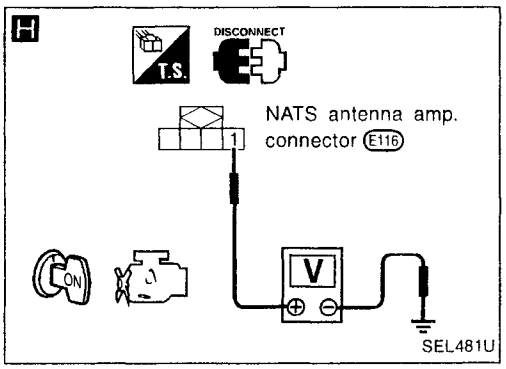

I

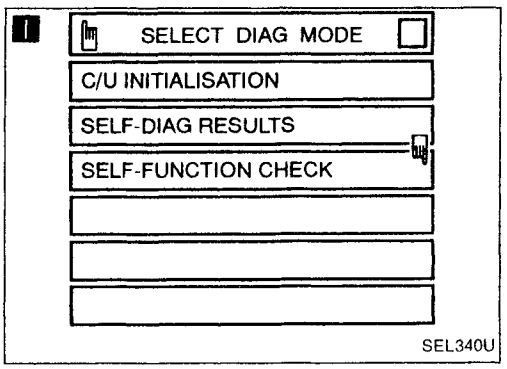

J

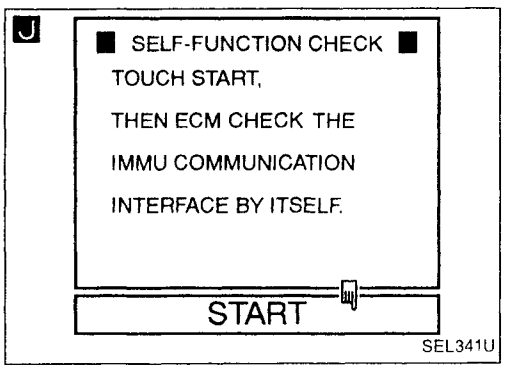

Ⓐ

F CHECK COMMUNICATION LINE CIRCUIT.
1) Disconnect ECM connector and IMMU connector.
2) Check voltage between the following terminals and ground.
ECM ㉕, ECM ㉖, IMMU ⑪ and IMMU ⑫
Voltage: 0V

NG → Communication line is short-circuited with battery voltage line or ignition switch ON line. Repair harness or connectors. **Ref. part No. C4**

OK ↓

G Check continuity between the following terminals and ground.
ECM ㉕, ECM ㉖, IMMU ⑪ and IMMU ⑫
Continuity should not exist.

NG → Communication line is short-circuited with ground line. Repair harness or connectors. **Ref. part No. C4**

OK ↓

H CHECK NATS ANTENNA AMP. CIRCUIT.
1) Disconnect NATS antenna amp. connector.
2) Turn ignition switch "ON".
3) Check voltage between antenna amp. terminal ① and ground.
Voltage: More than 4.7V

NG → NATS antenna amp. +5V line is short-circuited with battery voltage line or ground line. Repair harness or connectors. **Ref. part No. E3**

OK ↓

I SELF-FUNCTION CHECK
1) Connect ECM connector and disconnect IMMU connector.
2) Turn ignition switch "ON".
3) Touch "SELF-FUNCTION CHECK" on CONSULT "SELECT DIAG MODE" screen.

J Touch "START". ECM will then check its communication interface by itself.

NG → **K** (See next page.) ECM is malfunctioning. Replace ECM. **Ref. part No. B**

Perform initialisation with CONSULT. For the operation of initialisation, refer to "CONSULT operation manual NATS V2.0".

OK ↓ **L** (See next page.)

Ⓑ

EL

Simpo PDF Merge and Split Unregistered Version - http://www.simpopdf.com

Trouble Diagnoses (Cont'd)

K

SELF-FUNCTION CHECK

ECM's IMMU COMMUNICATION INTERFACE

*** *** NG *** ***

PRINT

SEL342U

L

SELF-FUNCTION CHECK

ECM's IMMU COMMUNICATION INTERFACE

*** *** OK *** ***

PRINT

SEL343U

A

SELF-DIAG RESULTS

FAILURE DETECTED	TIME
DIFFERENCE OF KEY	0

ERASE PRINT

SEL344U

B

C/U INITIALISATION

INITIALISATION STOPPED or FAILED

TURN IGN KEY SW "OFF" AND "ON", AFTER CONFIRMING SELF-DIAG RESULTS, PERFORM C/U INITIALISATION AGAIN.

ERASE PRINT

SEL372U

Ⓑ

IMMU is malfunctioning.
Replace IMMU.
Ref. part No. A

Perform initialisation with CONSULT.
For the operation of initialisation, refer to "CONSULT operation manual NATS V2.0".

DIAGNOSTIC PROCEDURE 4

Self-diagnostic results:
"DIFFERENCE OF KEY" displayed on CONSULT screen

A

Confirm SELF-DIAGNOSTIC RESULTS "DIFFERENCE OF KEY" displayed on CONSULT screen.

OK

Perform initialisation with CONSULT.
Re-register all NATS ignition key IDs.
For the operation of initialisation, refer to "CONSULT operation manual NATS V2.0".

Initialisation incompleted or failed with CONSULT → B

Initialisation completed

Start engine.

END
(Ignition key ID was unregistered.)
Ref. part No. D

B

IMMU is malfunctioning.
Replace IMMU.
Ref. part No. A

Perform initialisation with CONSULT.
For the operation of initialisation, refer to "CONSULT operation manual NATS V2.0".

Simpo PDF Merge and Split Unregistered Version - http://www.simpopdf.com

Trouble Diagnoses (Cont'd)

DIAGNOSTIC PROCEDURE 5

Self-diagnostic results:
"CHAIN OF IMMU-KEY" displayed on CONSULT screen

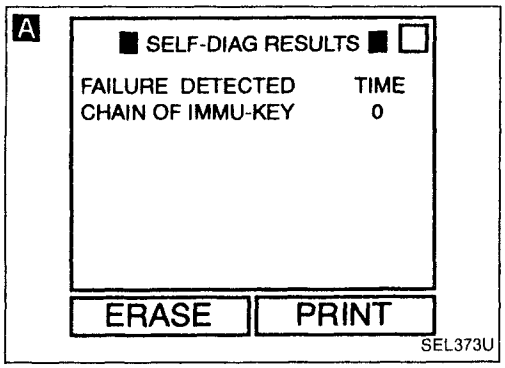

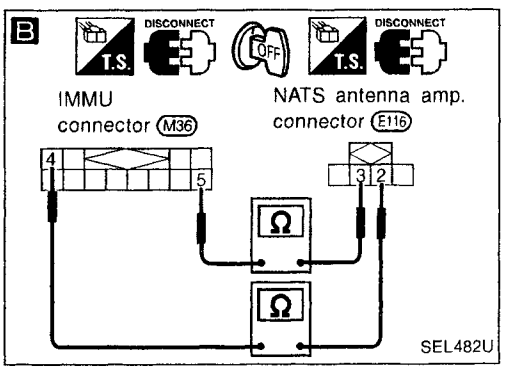

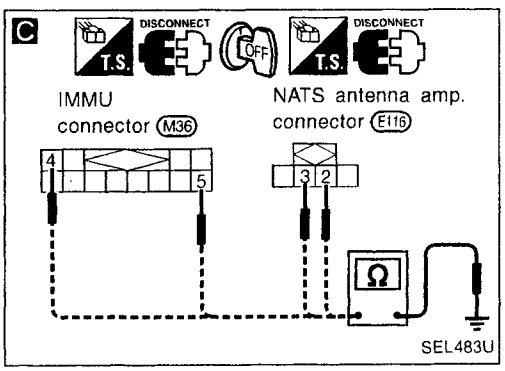

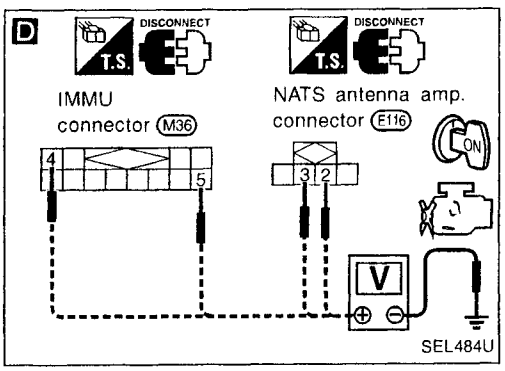

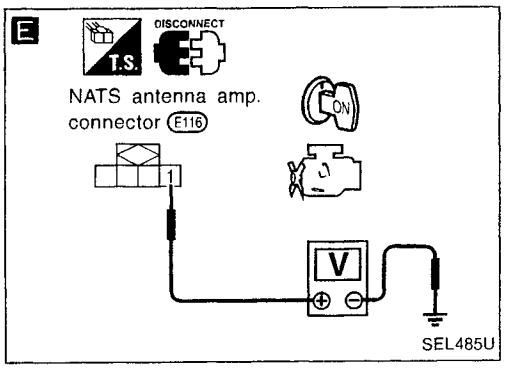

A

Confirm SELF-DIAGNOSTIC RESULTS "CHAIN OF IMMU-KEY" displayed on CONSULT screen.

OK ↓

B

CHECK ANTENNA AMP. CIRCUIT.
1) Disconnect IMMU connector and NATS antenna amp. connector.
2) Check continuity between the following IMMU terminals and NATS antenna amp. terminals.

IMMU terminal	NATS antenna amp. terminal	Ref. part No.
⑤	③	E1
④	②	E2

Continuity should exist.

NG → Check harness and connectors.
If NG, repair harness or connectors.

OK ↓

C

Check continuity between the following terminals and ground.

IMMU terminal	NATS antenna amp. terminal	Ref. part No.
⑤	③	E1
④	②	E2

Continuity should not exist.

NG → Communication line is short-circuited with ground line.
Repair harness or connectors.

OK ↓

D

Check voltage between the following terminals and ground.

IMMU terminal	NATS antenna amp. terminal	Ref. part No.
⑤	③	E1
④	②	E2

Voltage: 0V

NG → Communication line is short-circuited with battery voltage line or ignition switch "ON" line.
Repair harness or connectors.

OK ↓

E

CHECK ANTENNA AMP. POWER SOURCE CIRCUIT.
1) Connect IMMU connector.
2) Check voltage between NATS antenna amp. terminal ① and ground.

Voltage: More than 4.7V

NG → Power source line is open circuit.
Repair harness or connector.
Ref. part No. E3

OK ↓

Ⓐ

EL

Simpo PDF Merge and Split Unregistered Version - http://www.simpopdf.com

Trouble Diagnoses (Cont'd)

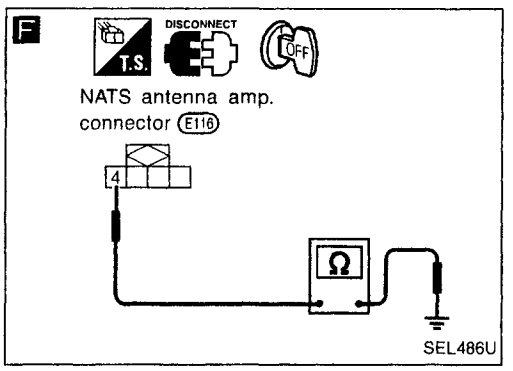

Ⓐ

F

CHECK ANTENNA AMP. GROUND LINE CIRCUIT.
1) Turn ignition switch "OFF".
2) Check continuity between NATS antenna amp. terminal ④ and ground.
Continuity should exist.

NG → NATS antenna amp. ground line is open circuit.
Check harness continuity between IMMU terminal ⑦ and NATS antenna amp. terminal ④.
If NG, repair harness or connectors.
Ref. part No. E4

OK ↓

CHECK NATS IGNITION KEY ID CHIP.
1) Connect NATS antenna amp. connector.
2) Pull the ignition key out.
3) Start engine with another registered NATS ignition key.

Start OK → Ignition key ID chip was malfunctioning.
Replace the ignition key.
Ref. part No. E5

Start NG ↓

G

CHECK IMMU OUTPUT VOLTAGE.
1) Turn the ignition switch "ON".
2) Check voltage between IMMU terminal ③ and ground.
Voltage: More than 4.7V

NG → Perform initialisation with CONSULT.
For the operation of initialisation, refer to "CONSULT operation manual NATS V2.0".

OK ↓

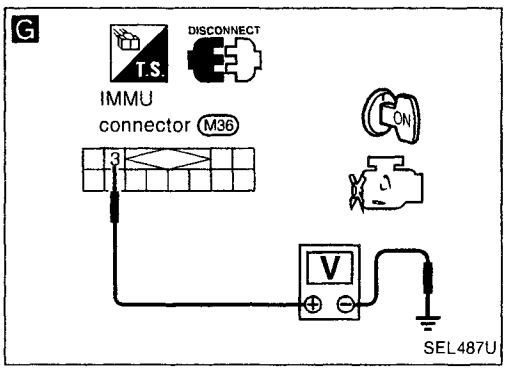

H

CHECK IMMU GROUND CIRCUIT.
1) Turn the ignition switch "OFF".
2) Disconnect IMMU connector.
3) Check continuity between IMMU terminal ⑦ and ground.
Continuity should exist.

NG → Replace IMMU.
Ref. part No. A

OK ↓

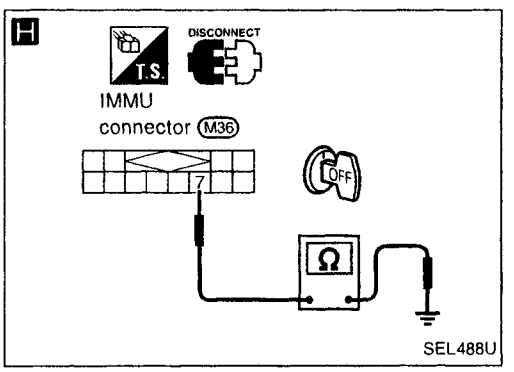

I

CHECK IMMU FUNCTION 1.
1) Connect IMMU connector and NATS antenna amp. connector.
2) Check voltage between IMMU terminal ④ and ground.

Voltage

Time (After turning ignition switch "ON".)	Voltage [V]
For approx. 0.5 sec.	Approx. 2.3 - 5
After 1 sec.	0

NG → Replace IMMU.
Ref. part No. A

OK ↓

Ⓑ

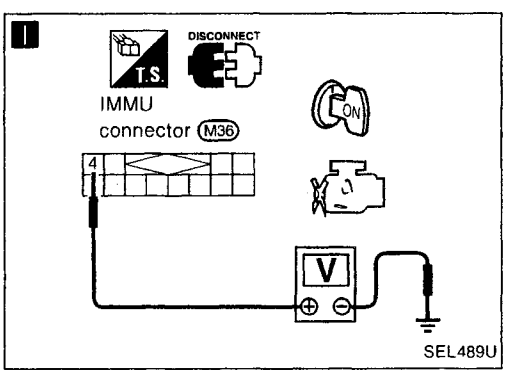

Simpo PDF Merge and Split Unregistered Version - http://www.simpopdf.com

Trouble Diagnoses (Cont'd)

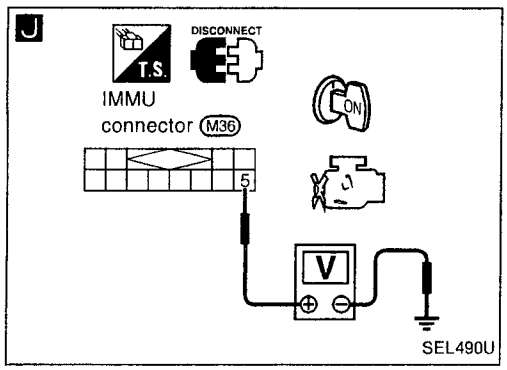

Ⓑ

J

CHECK IMMU FUNCTION 2.
1) Disconnect NATS antenna amp. connector.
2) Turn ignition switch "ON".
3) Check voltage between IMMU terminal ⑤ and ground.
Voltage:
6 sec. after turning ignition switch "ON"
Approx. 4.5 - 5V

NG → Replace IMMU.
Ref. part No. A

Perform initialisation with CONSULT.
For the operation of initialisation, refer to "CONSULT operation manual NATS V2.0".

OK ↓

NATS antenna amp. is malfunctioning.
When replacing the amp. hold on to amp. body. Take care not to pull on amp. harness.
Ref. part No. E6

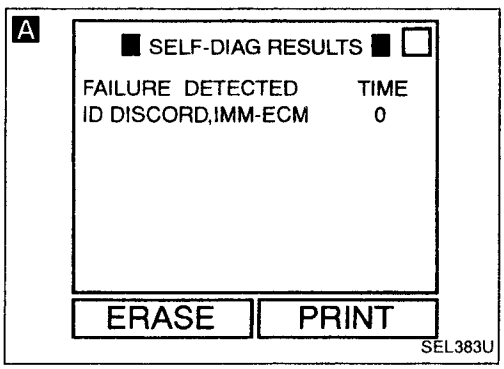

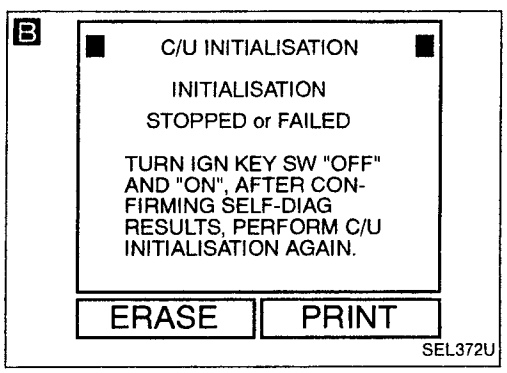

DIAGNOSTIC PROCEDURE 6

Self-diagnostic results:
"ID DISCORD, IMM-ECM" displayed on CONSULT screen

A

Confirm SELF-DIAGNOSTIC RESULTS "ID DISCORD, IMM-ECM*" displayed on CONSULT screen.

* "ID DISCORD, IMM-ECM": Registered ID of IMMU is in discord with that of ECM.

↓

Perform initialisation with CONSULT.
Re-register all NATS ignition key IDs.
For the operation of initialisation, refer to "CONSULT operation manual NATS V2.0".

Initialisation incompleted or failed with CONSULT → B

ECM is malfunctioning.
Replace ECM.
Ref. part No. F

Perform initialisation with CONSULT.
For the operation of initialisation, refer to "CONSULT operation manual NATS V2.0".

Initialisation completed ↓

Start engine. ↓

END
Ref. part No. F

EL

Simpo PDF Merge and Split Unregistered Version - http://www.simpopdf.com

Trouble Diagnoses (Cont'd)

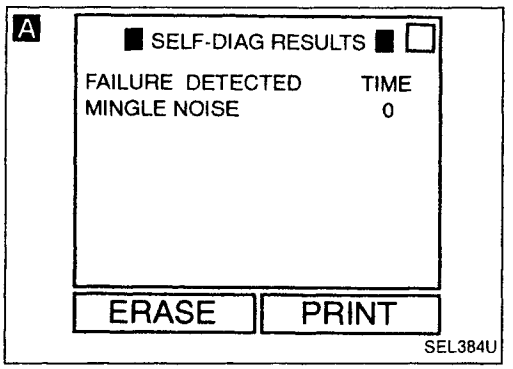

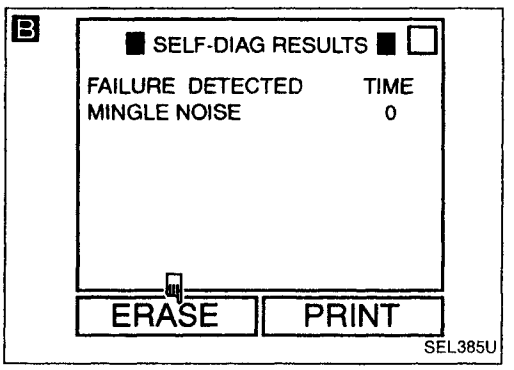

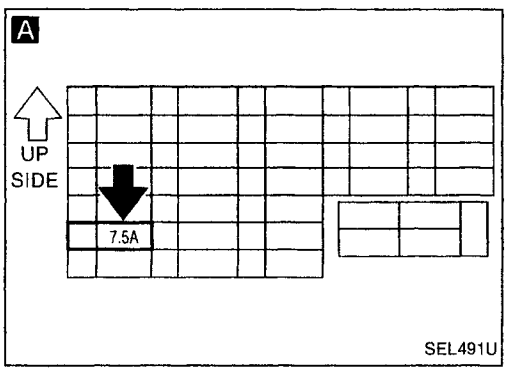

DIAGNOSTIC PROCEDURE 7

Self-diagnostic results:
"MINGLE NOISE" displayed on CONSULT screen

A

Confirm SELF-DIAGNOSTIC RESULTS "MINGLE NOISE" displayed on CONSULT screen.

↓

Turn off or remove any possible noise sources.

↓

B

Touch "ERASE" on CONSULT SELF-DIAGNOSTIC RESULTS screen.

↓

Start engine. — NG → (back to A)

↓ OK

END

DIAGNOSTIC PROCEDURE 8

"NATS SECURITY IND. DOES NOT LIGHT UP"

A

Check fuse (7.5A) in the fuse box. — NG → Replace fuse.

↓ OK

NATS INITIALISATION
1) Fix the 7.5A fuse shown left A .
2) Perform initialisation with CONSULT.
For the operation of initialisation, refer to "CONSULT operation manual NATS V2.0".

↓

Turn ignition switch "OFF".

↓

Start engine and turn ignition switch "OFF".

↓

Check NATS security ind. blinking. — OK → END

↓ NG

Ⓐ

Simpo PDF Merge and Split Unregistered Version - http://www.simpopdf.com

Trouble Diagnoses (Cont'd)

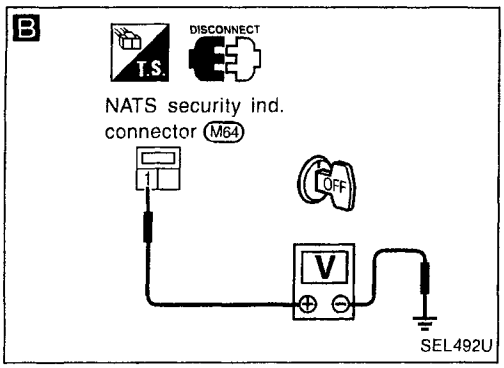

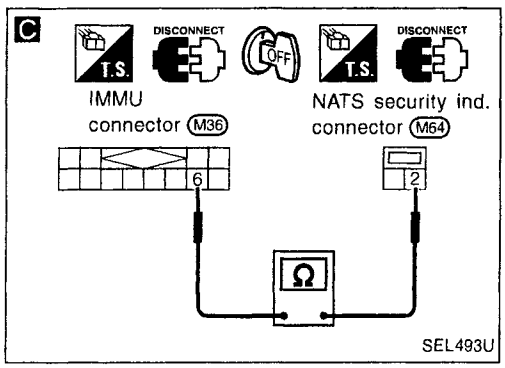

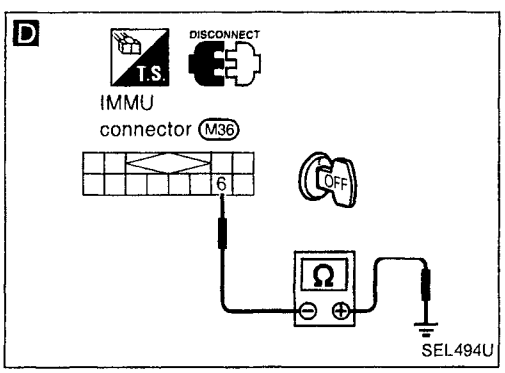

Ⓐ

B

Check voltage between NATS security ind. connector terminal ① (Located under the instrument panel) and ground.
Voltage : Battery voltage

NG → Check harness continuity between fuse and NATS security ind. connector M64.
If NG, repair harness or connector.

OK ↓

C

CHECK NATS SECURITY IND. CIRCUIT.
1) Disconnect NATS IMMU connector.
2) Check harness continuity between NATS security ind. connector terminal ② and NATS IMMU connector terminal ⑥.
Continuity should exist.

NG → Repair harness.

OK ↓

D

CHECK NATS IMMU FUNCTION
1) Connect NATS IMMU connector.
2) Disconnect NATS security ind. connector.
3) Check continuity between NATS IMMU terminal ⑥ and ground.
Continuity should exist intermittently.

NG → NATS IMMU is malfunctioning. Replace IMMU.

Perform initialisation with CONSULT.
For the operation of initialisation, refer to "CONSULT operation manual NATS V2.0".

OK ↓

NATS security ind. is malfunctioning.
Pull out NATS security ind. with harness and connector.
Check harness connection

NG → Repair harness.

OK ↓

NATS security ind. cell is malfunctioning.
Replace NATS security ind.

EL

Simpo PDF Merge and Split Unregistered Version - http://www.simpopdf.com

Engine Compartment

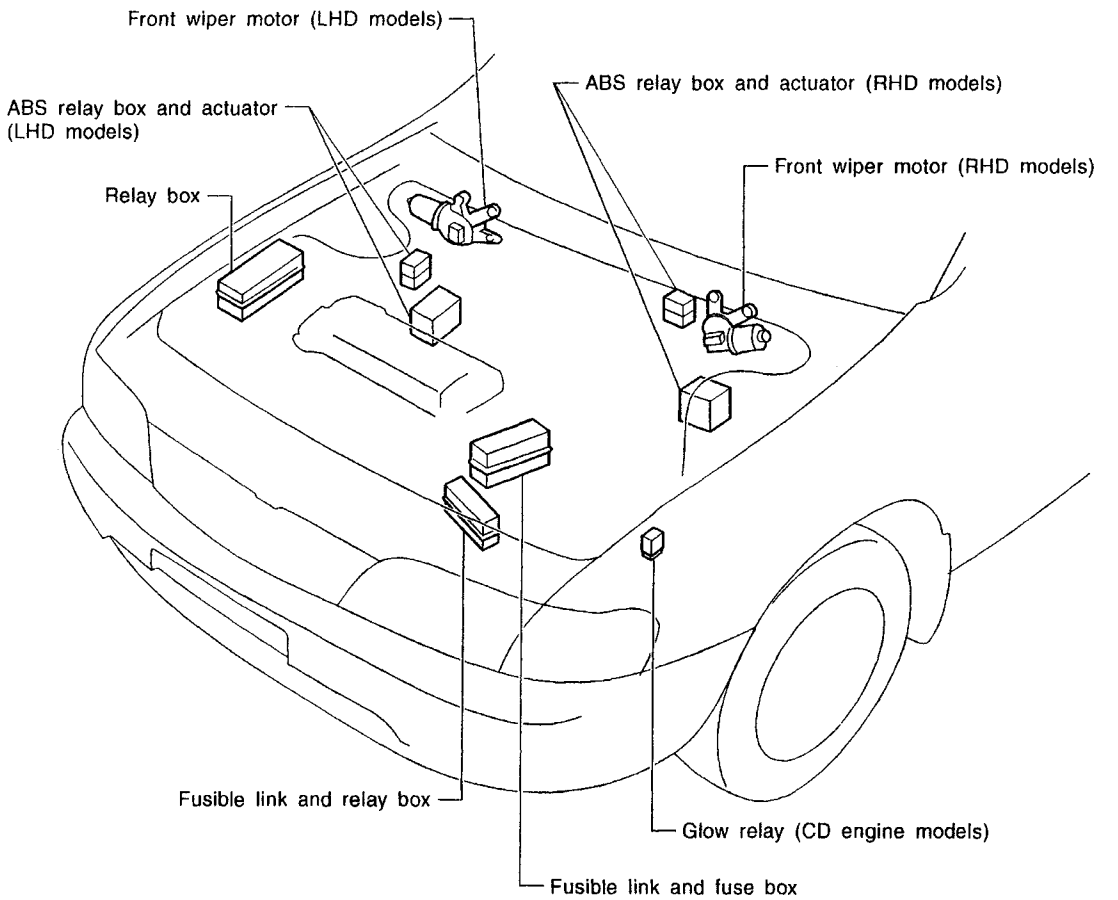

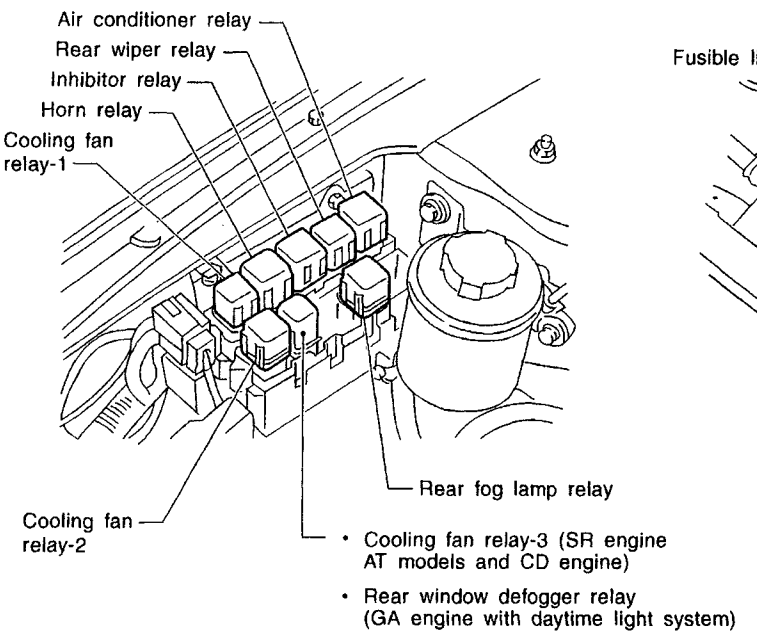

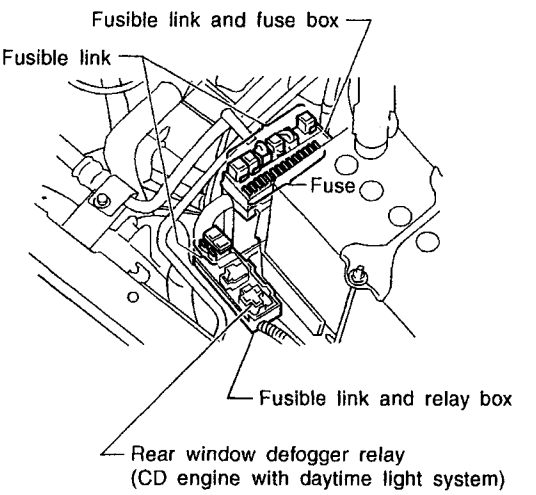

HEL149

Simpo PDF Merge and Split Unregistered Version - http://www.simpopdf.com

Passenger Compartment

LHD MODELS

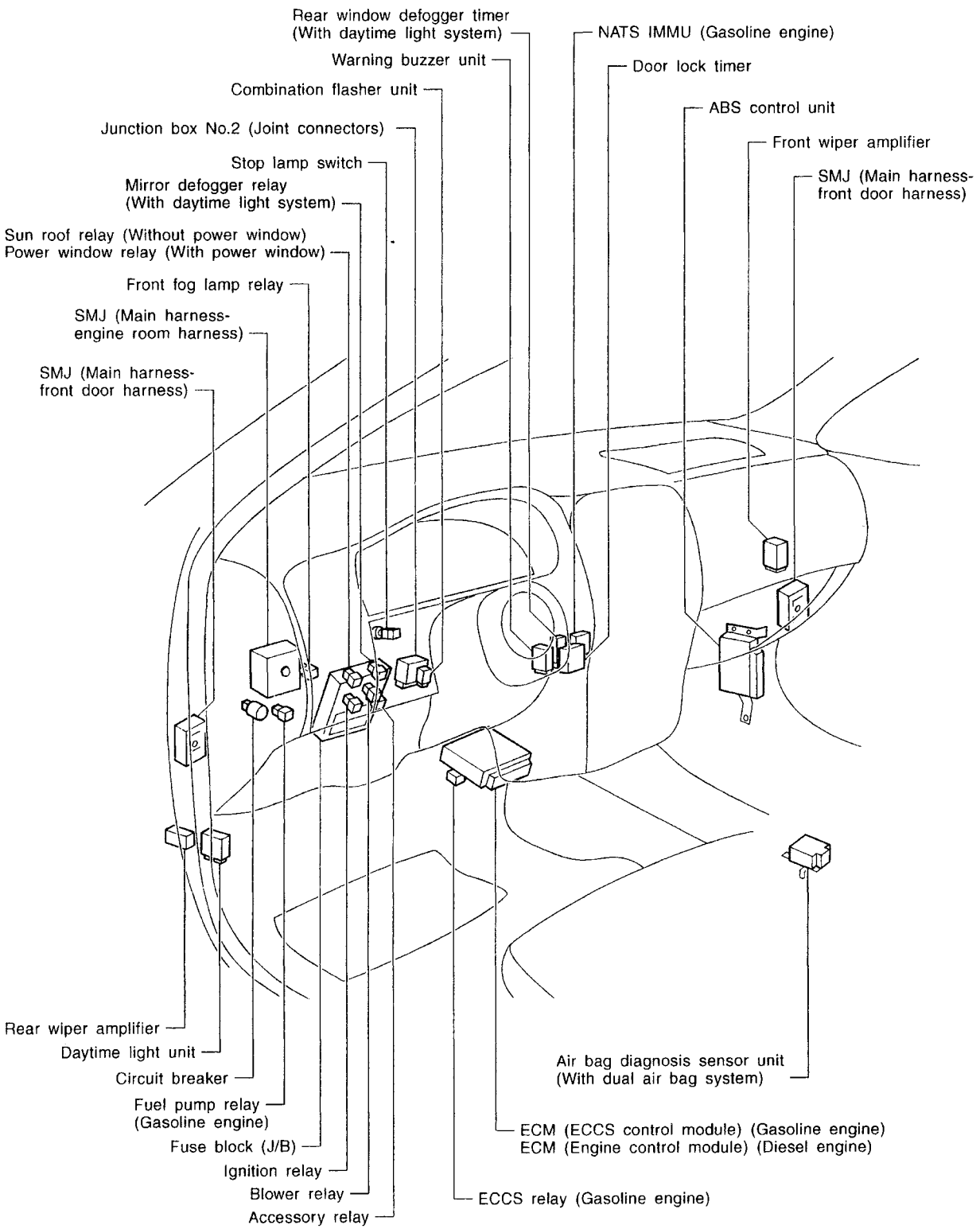

EL

HEL150

Simpo PDF Merge and Split Unregistered Version - http://www.simpopdf.com

Passenger Compartment (Cont'd)

RHD MODELS

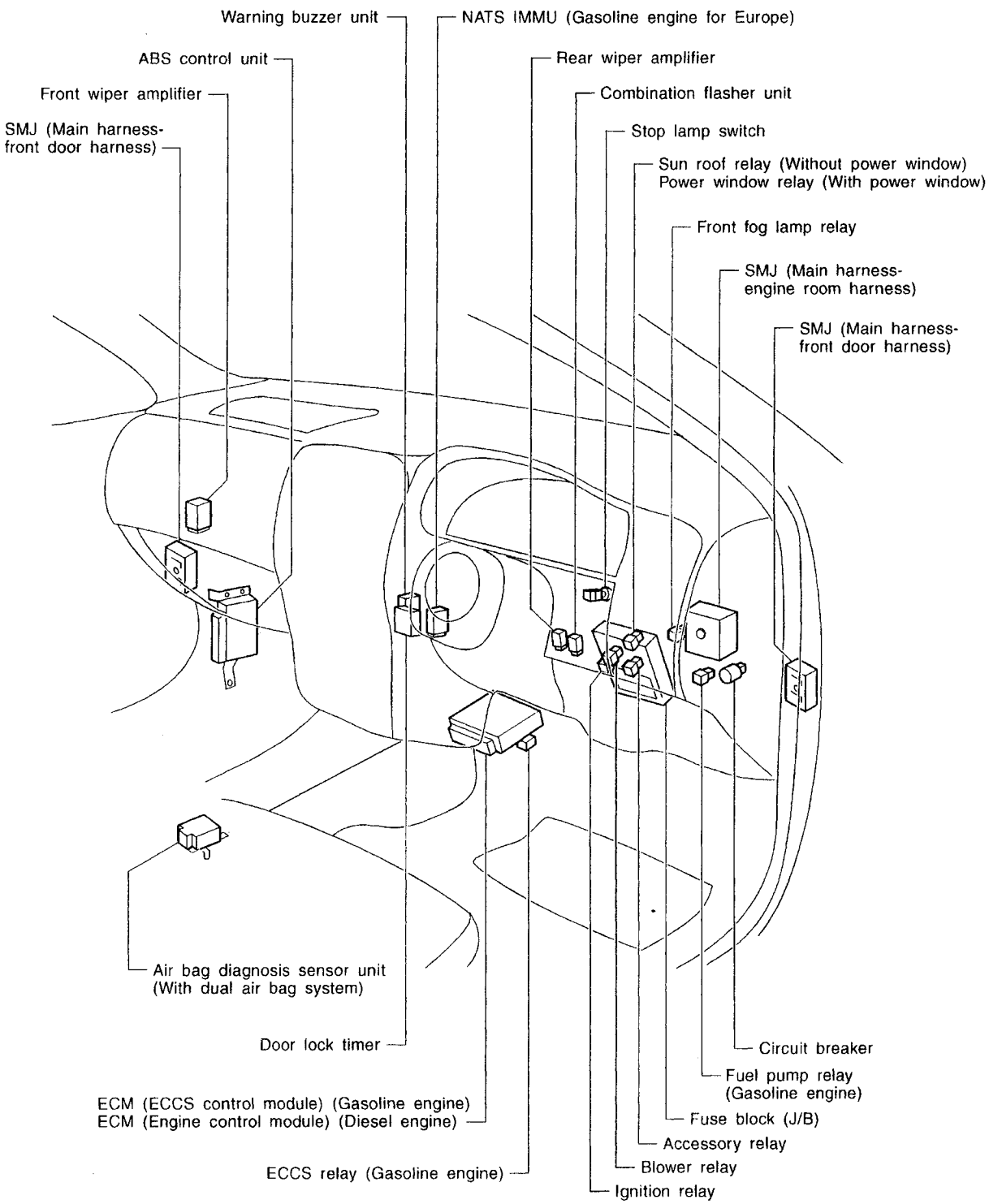

HEL151

Simpo PDF Merge and Split Unregistered Version - http://www.simpopdf.com

How to Read Harness Layout

Example:

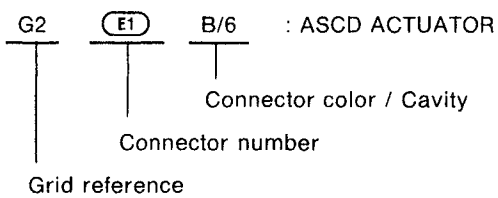

The following Harness Layouts use a map style grid to help locate connectors on the drawings:
- Engine Room Harness (Engine Compartment)
- Main Harness
- Body Harness

To use the grid reference

1) Find the desired connector number on the connector list.
2) Find the grid reference.
3) On the drawing, find the crossing of the grid reference letter column and number row.
4) Find the connector number in the crossing zone.
5) Follow the line (if used) to the connector.

CONNECTOR SYMBOL

Main symbols of connector (in Harness Layout) are indicated in the below.

Connector type	Water proof type		Standard type	
	Male	Female	Male	Female
• Cavity: Less than 4 • Relay connector				
• Cavity: From 5 to 8				
• Cavity: More than 9	—	—		
• Ground terminal etc.	—			

FFC (FLAT FLEXIBLE CIRCUIT)

An FFC (Flat Flexible Circuit) has been adopted for door harness of 3-door Hatchback models for Europe.

CAUTION:
- **Do not attempt to repair, splice or modify the FFC. If the FFC is damaged, replace with a new one.**
- **Do not force the FFC in the opposite direction to which it is bent.**

EL

Simpo PDF Merge and Split Unregistered Version - http://www.simpopdf.com

Outline

LHD MODELS

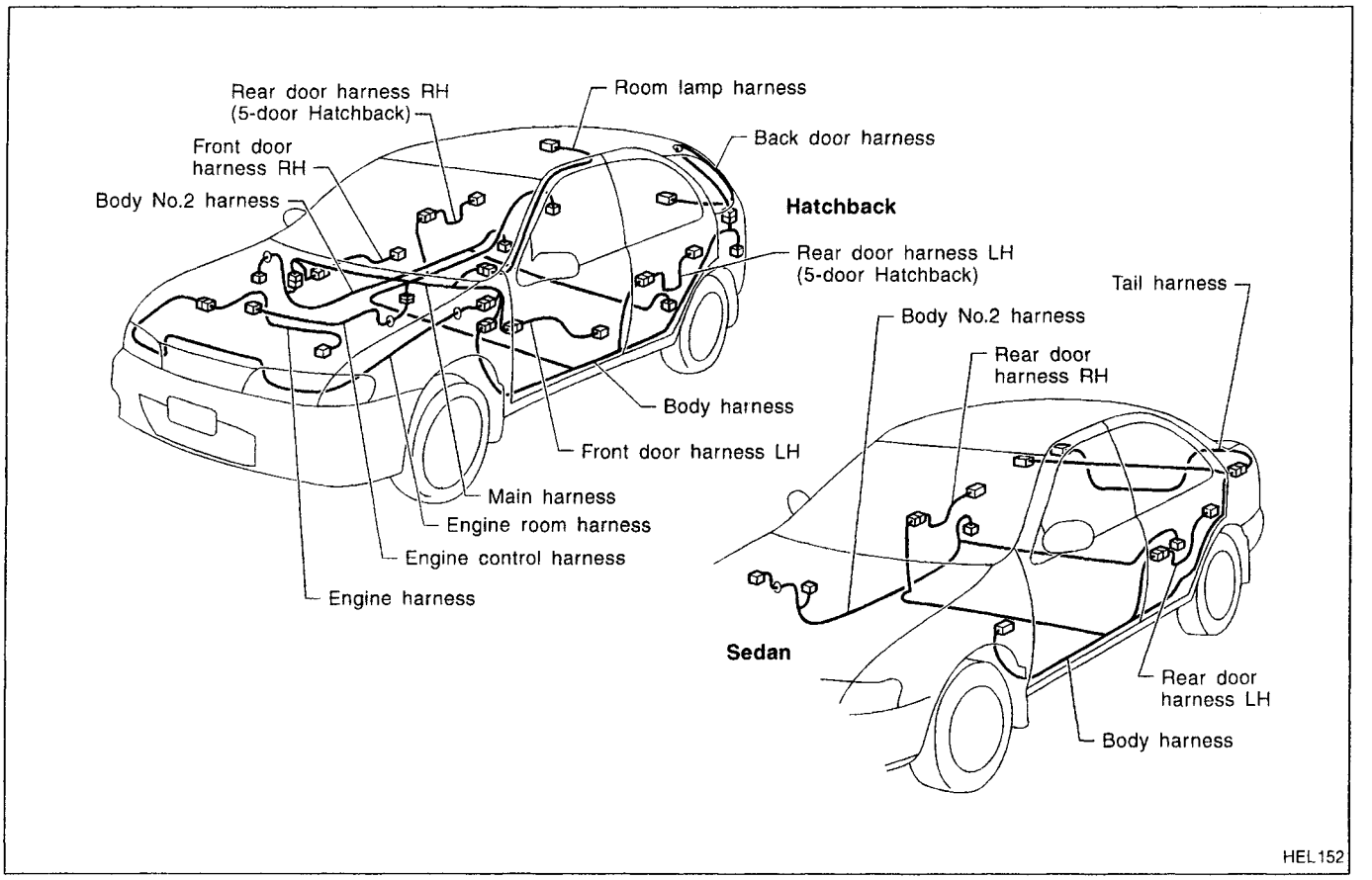

RHD MODELS

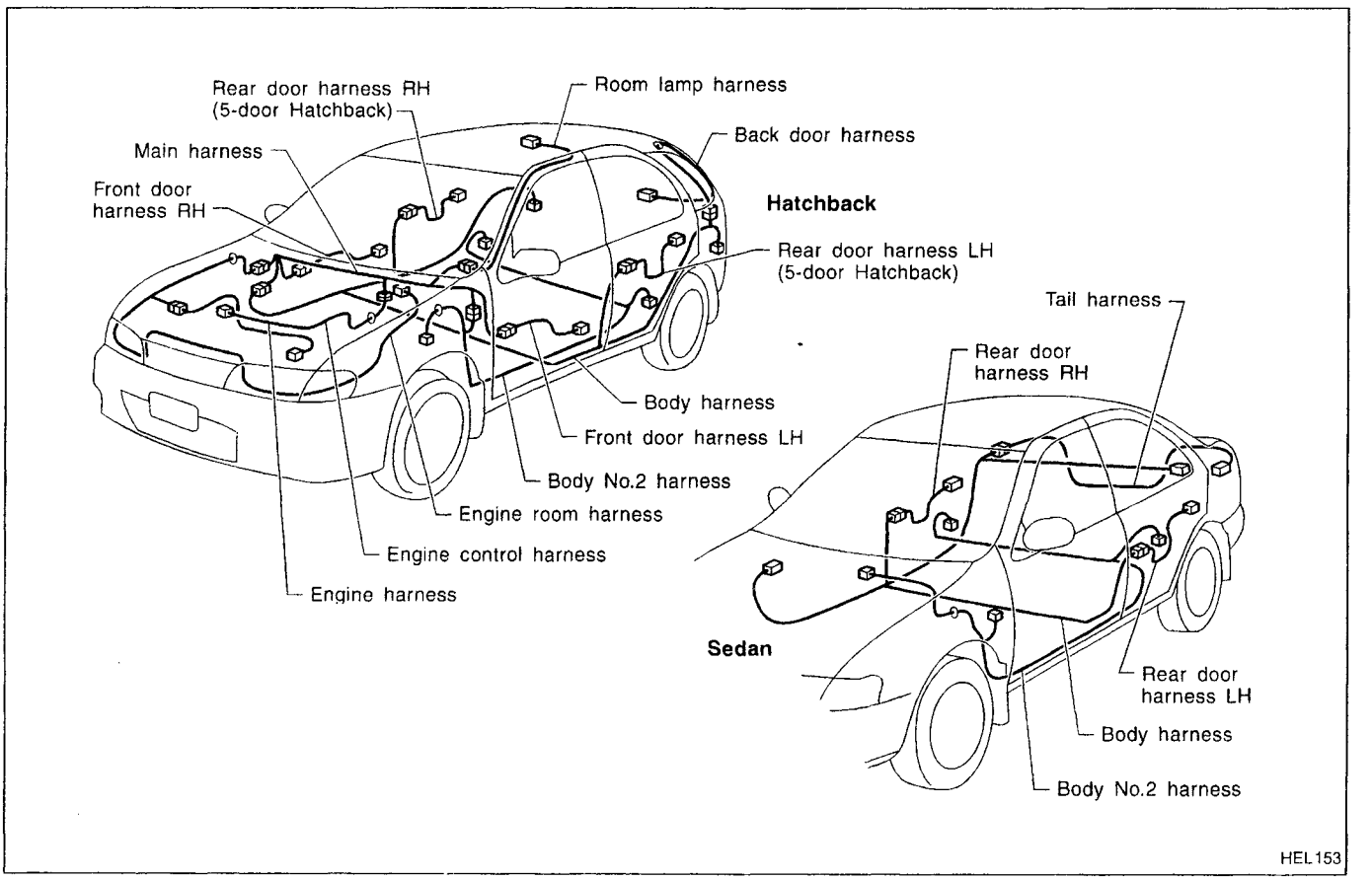

Simpo PDF Merge and Split Unregistered Version - http://www.simpopdf.com

Engine Control Harness

GA14DE, 16DE ENGINE FOR EUROPE AND GA15DE ENGINE

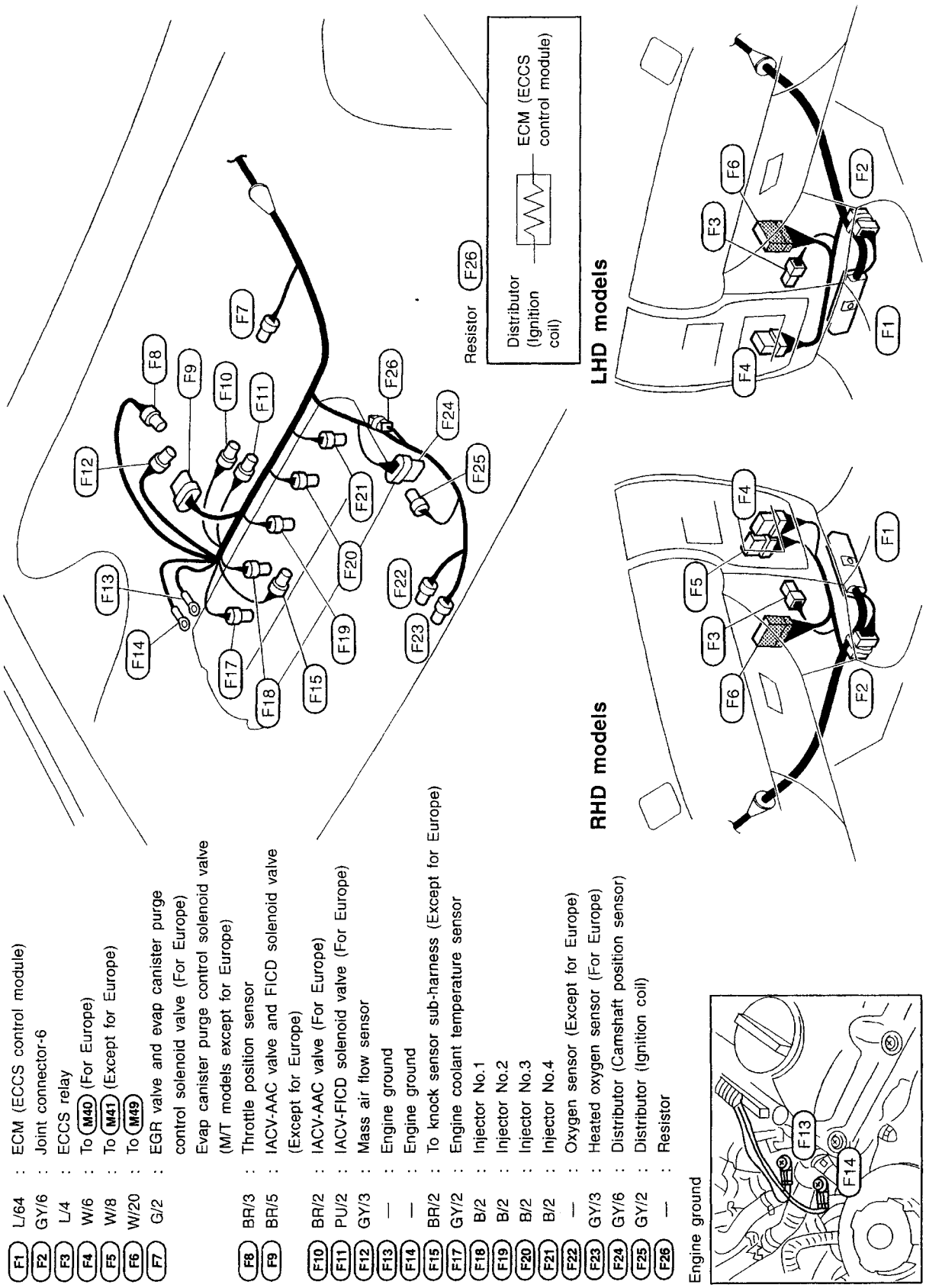

HEL164

Simpo PDF Merge and Split Unregistered Version - http://www.simpopdf.com

Engine Control Harness (Cont'd)

GA16DE ENGINE EXCEPT FOR EUROPE

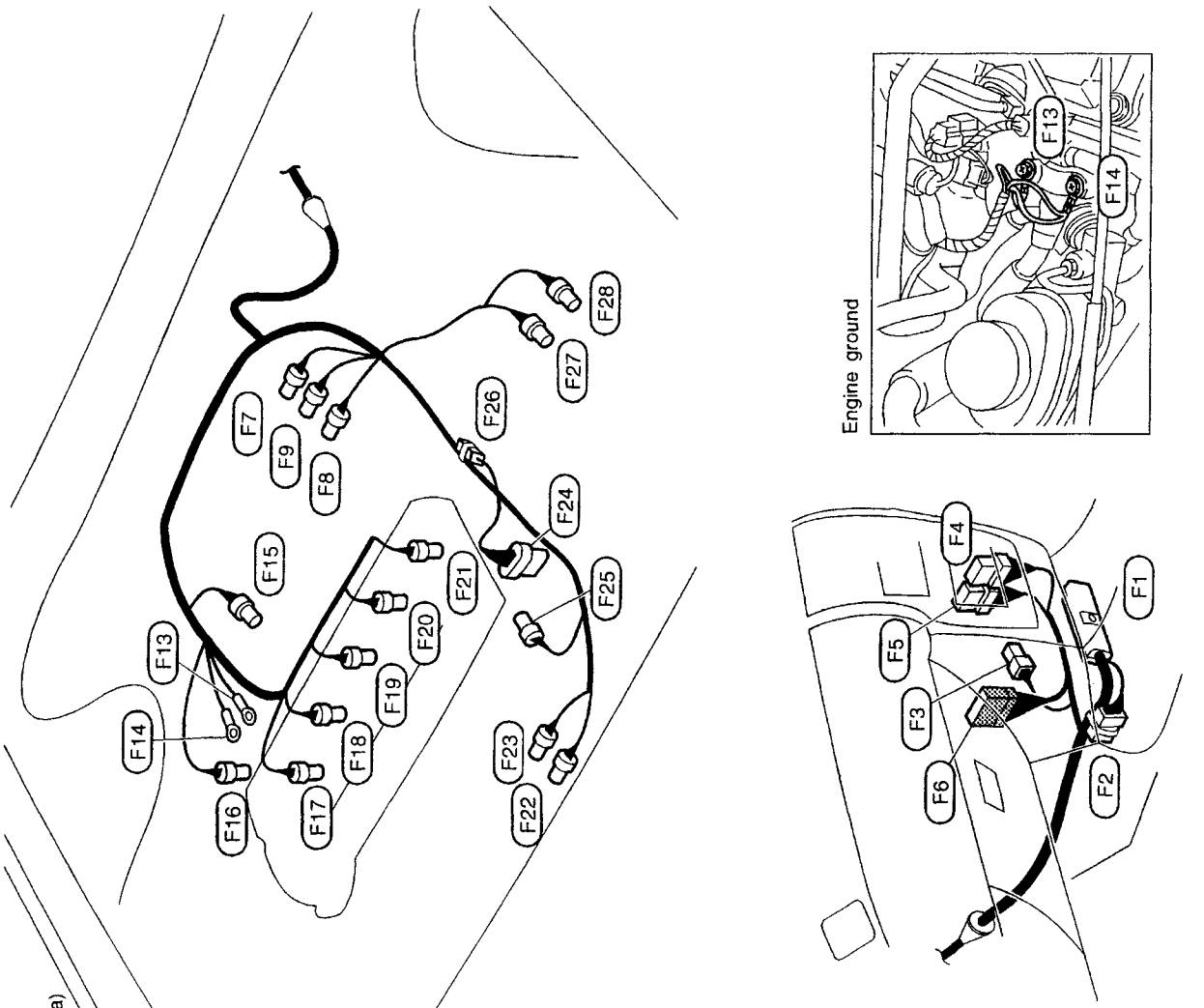

F1	L/64	: ECM (ECCS control module) (Except for Australia)
	W/88	: ECM (ECCS control module) (For Australia)
F2	GY/6	: Joint connector-6
F3	L/4	: ECCS relay
F4	W/6	: To M40 (For Australia)
F5	W/8	: To M41 (Except for Australia)
F6	W/20	: To M49
F7	G/2	: EGR valve and evap canister purge control solenoid valve (For Australia)
		Evap canister purge control solenoid valve (Except for Australia)
F8	BR/3	: Throttle position sensor
F9	BR/5	: IACV-AAC valve and FICD solenoid valve
F13	—	: Engine ground
F14	—	: Engine ground
F15	BR/2	: To knock sensor sub-harness
F16	B/2	: VTC solenoid valve
F17	GY/2	: Engine coolant temperature sensor
F18	B/2	: Injector No.1
F19	B/2	: Injector No.2
F20	B/2	: Injector No.3
F21	B/2	: Injector No.4
F22	—	: Oxygen sensor (Except A/T models for Australia)
F23	GY/3	: Heated oxygen sensor (A/T models for Australia)
F24	GY/6	: Distributor (Camshaft position sensor)
F25	GY/2	: Distributor (Ignition coil)
F26	—	: Resistor
F27	BR/4	: Mass air flow sensor
F28	GY/2	: Intake air temperature sensor (For Australia)

HEL165

Simpo PDF Merge and Split Unregistered Version - http://www.simpopdf.com

Engine Control Harness (Cont'd)

SR20DE ENGINE

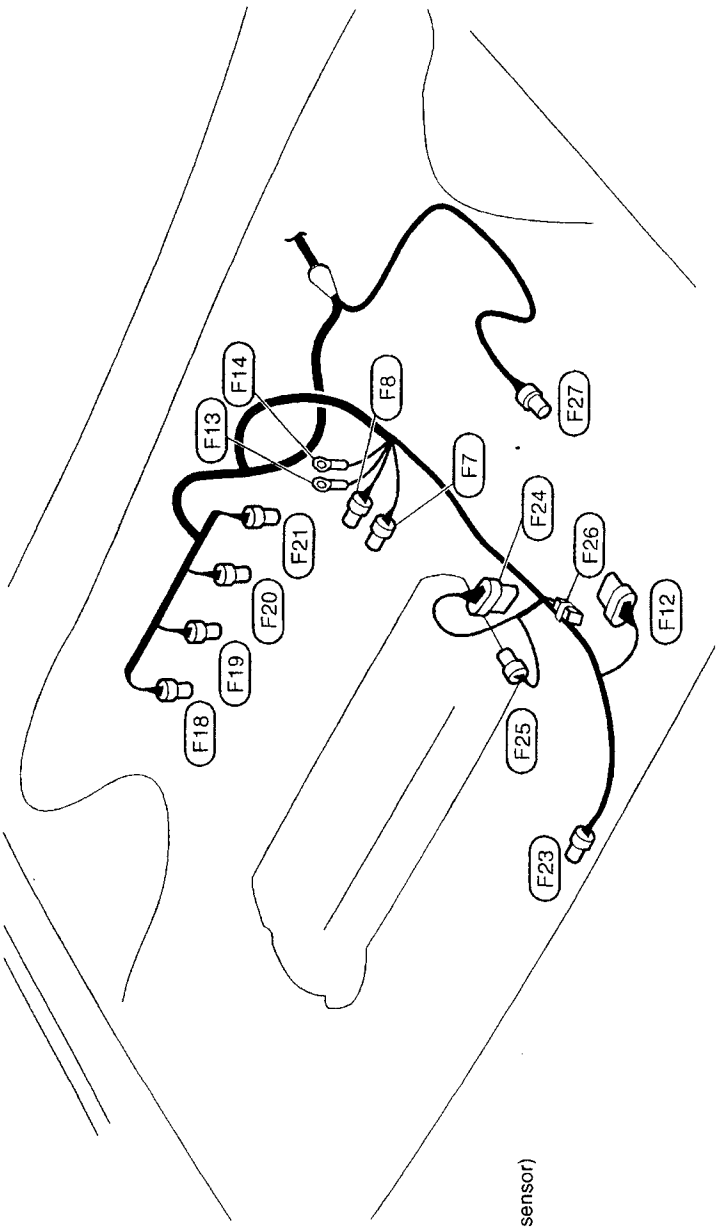

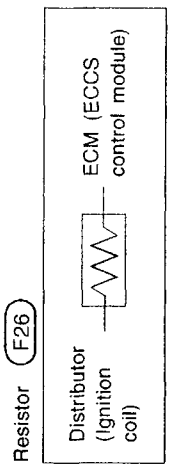

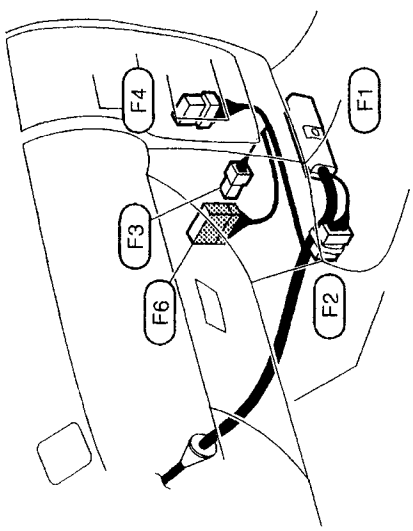

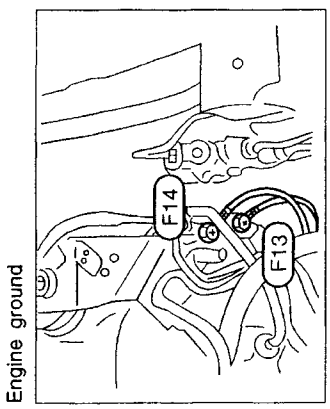

F1	L/64	:	ECM (ECCS control module)
F2	GY/6	:	Joint connector-6
F3	L/4	:	ECCS relay
F4	W/6	:	To (M40)
F6	W/20	:	To (M49)
F7	B/2	:	EGR valve and evap canister purge control solenoid valve
F8	BR/3	:	Throttle position sensor
F12	GY/6	:	To (E227)
F13	—	:	Engine ground
F14	—	:	Engine ground
F18	B/2	:	Injector No.1
F19	B/2	:	Injector No.2
F20	B/2	:	Injector No.3
F21	B/2	:	Injector No.4
F23	GY/3	:	Heated oxygen sensor
F24	GY/6	:	Distributor (Camshaft position sensor)
F25	GY/2	:	Distributor (Ignition coil)
F26	—	:	Resistor
F27	BR/4	:	Mass air flow sensor

EL

HEL166

Simpo PDF Merge and Split Unregistered Version - http://www.simpopdf.com

Engine Room Harness

ENGINE COMPARTMENT — LHD models

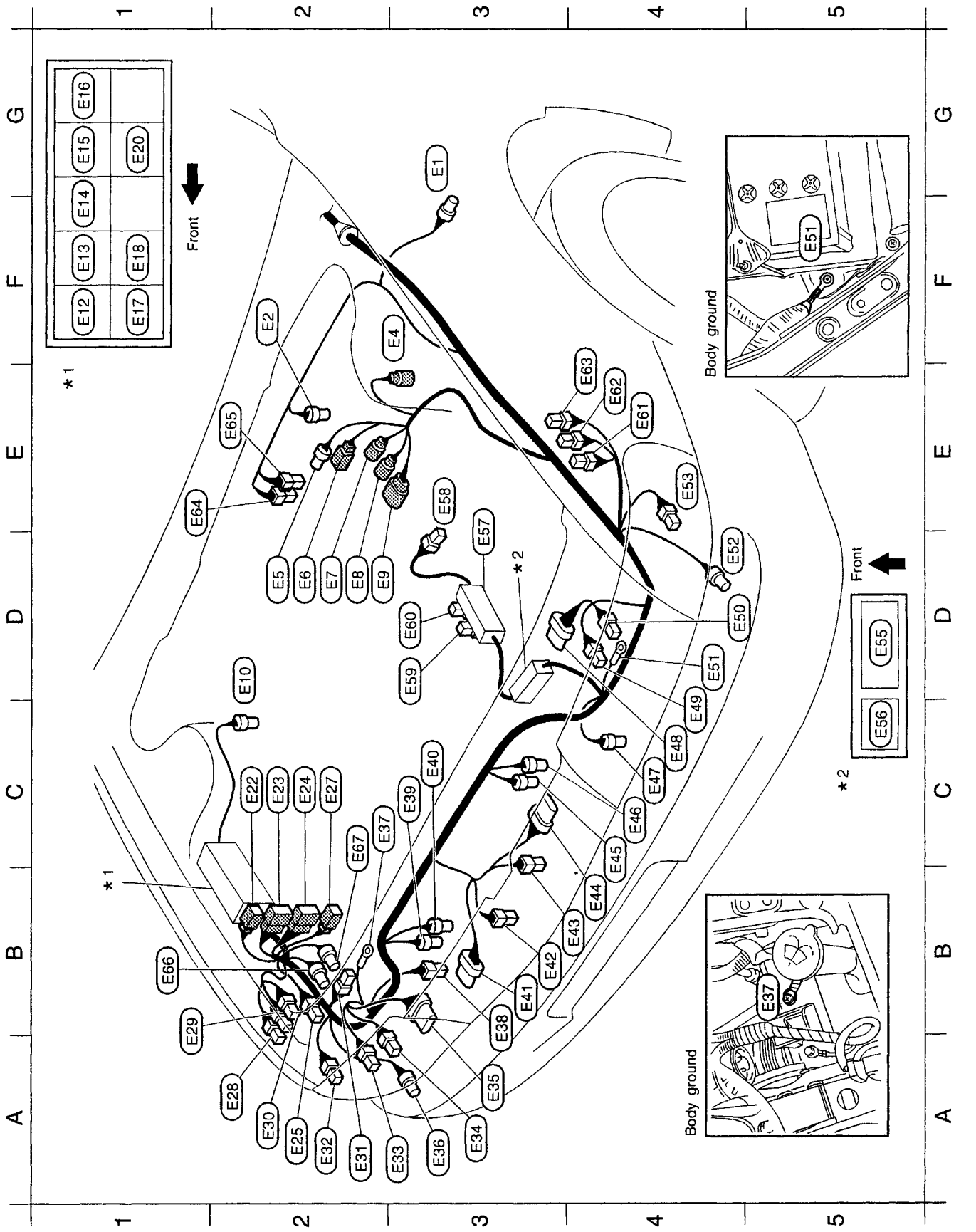

HEL154

Simpo PDF Merge and Split Unregistered Version - http://www.simpopdf.com

Engine Room Harness (Cont'd)

A3	E36	GY/2	:	Front fog lamp RH (GA engine M/T models)
C2	E37	—	:	Body ground
B3	E38	GY/1	:	Brake vacuum switch (CD engine)
C3	E39	GY/2	:	Cooling fan motor-2 (1-mode type)
C3	E40	GY/4	:	Cooling fan motor-2 (2-mode type with CD engine)
B3	E41	GY/6	:	Headlamp wiper motor RH (With daytime light system)
B3	E42	B/1	:	Horn high
B4	E43	B/1	:	Horn low
B4	E44	GY/6	:	Headlamp wiper motor LH (With daytime light system)
C4	E45	GY/2	:	Cooling fan motor-1 (1-mode type)
C4	E46	GY/4	:	Cooling fan motor-1 (2-mode type with CD engine)
C4	E47	B/2	:	Dual-pressure switch
C4	E48	GY/6	:	Headlamp aiming motor unit LH
D4	E49	B/3	:	Headlamp LH
D4	E50	B/2	:	Clearance lamp LH
D4	E51	—	:	Body ground
D4	E52	GY/2	:	Front fog lamp LH (GA engine M/T models)
E4	E53	B/2	:	Front turn signal lamp LH
D5	E55	—	:	Fusible link
C5	E56	L/4	:	Rear window defogger relay (CD engine with daytime light system)
E3	E57	—	:	Fusible link and fuse box
E3	E58	B/1	:	Battery
D3	E59	B/1	:	Fusible link and fuse box
D3	E60	W/1	:	Fusible link and fuse box
E4	E61	G/2	:	Glow relay (CD engine)
E4	E62	W/1	:	Glow relay (CD engine)
E4	E63	W/1	:	Glow relay (CD engine)
E1	E64	B/1	:	IACV-FICD solenoid valve (CD engine)
E2	E65	B/1	:	IACV-FICD solenoid valve (CD engine)
B1	E66	GY/4	:	Cooling fan motor-1 (GA engine A/T models without daytime light system)
C2	E67	GY/4	:	Cooling fan motor-2 (GA engine A/T models without daytime light system)

G3	E1	GY/2	:	Side turn signal lamp LH
F2	E2	GY/2	:	Brake fluid level switch
F3	E4	BR/2	:	Front wheel speed sensor LH (For ABS)
D2	E5	GY/2	:	Fuel filter sensor (CD engine)
D2	E6	B/1	:	To E228 (CD engine)
D2	E7	GY/1	:	To E229 (CD engine)
D2	E8	GY/4	:	To E231 (CD engine)
D2	E9	B/8	:	To E230 (CD engine)
D2	E10	GY/2	:	ABS relay box
F1	E12	L/4	:	Cooling fan relay-1 (Gasoline engine)
		BR/6	:	Cooling fan relay-1 (CD engine)
F1	E13	W/3	:	Horn relay
F1	E14	L/4	:	Inhibitor relay
G1	E15	B/5	:	Rear wiper relay
G1	E16	L/4	:	A/C relay
F1	E17	BR/6	:	Cooling fan relay-2 (GA engine A/T models for Europe without daytime light system and CD engine)
F1	E18	BR/6	:	Cooling fan relay-3 (CD engine)
F1	E18	L/4	:	Rear window defogger relay (GA engine with daytime light system)
G1	E20	L/4	:	Rear fog lamp relay (Without daytime light system)
		GY/6	:	Rear fog lamp relay (With daytime light system)
C2	E22	B/2	:	To E204
C2	E23	B/6	:	To E201 (Gasoline engine)
C2	E24	B/8	:	To E202 (Gasoline engine)
A2	E25	W/2	:	Headlamp washer motor (With daytime light system)
C2	E27	GY/4	:	To E201 (CD engine)
A2	E28	W/2	:	Front washer motor
B1	E29	G/2	:	Rear washer motor
A2	E30	B/2	:	Washer fluid level switch
A2	E31	GY/2	:	To front fog lamp sub-harness
A2	E32	B/2	:	Front turn signal lamp RH
A3	E33	B/2	:	Clearance lamp RH
A3	E34	B/3	:	Headlamp RH
A3	E35	GY/6	:	Headlamp aiming motor unit RH

Simpo PDF Merge and Split Unregistered Version - http://www.simpopdf.com

Engine Room Harness (Cont'd)

ENGINE COMPARTMENT — RHD models

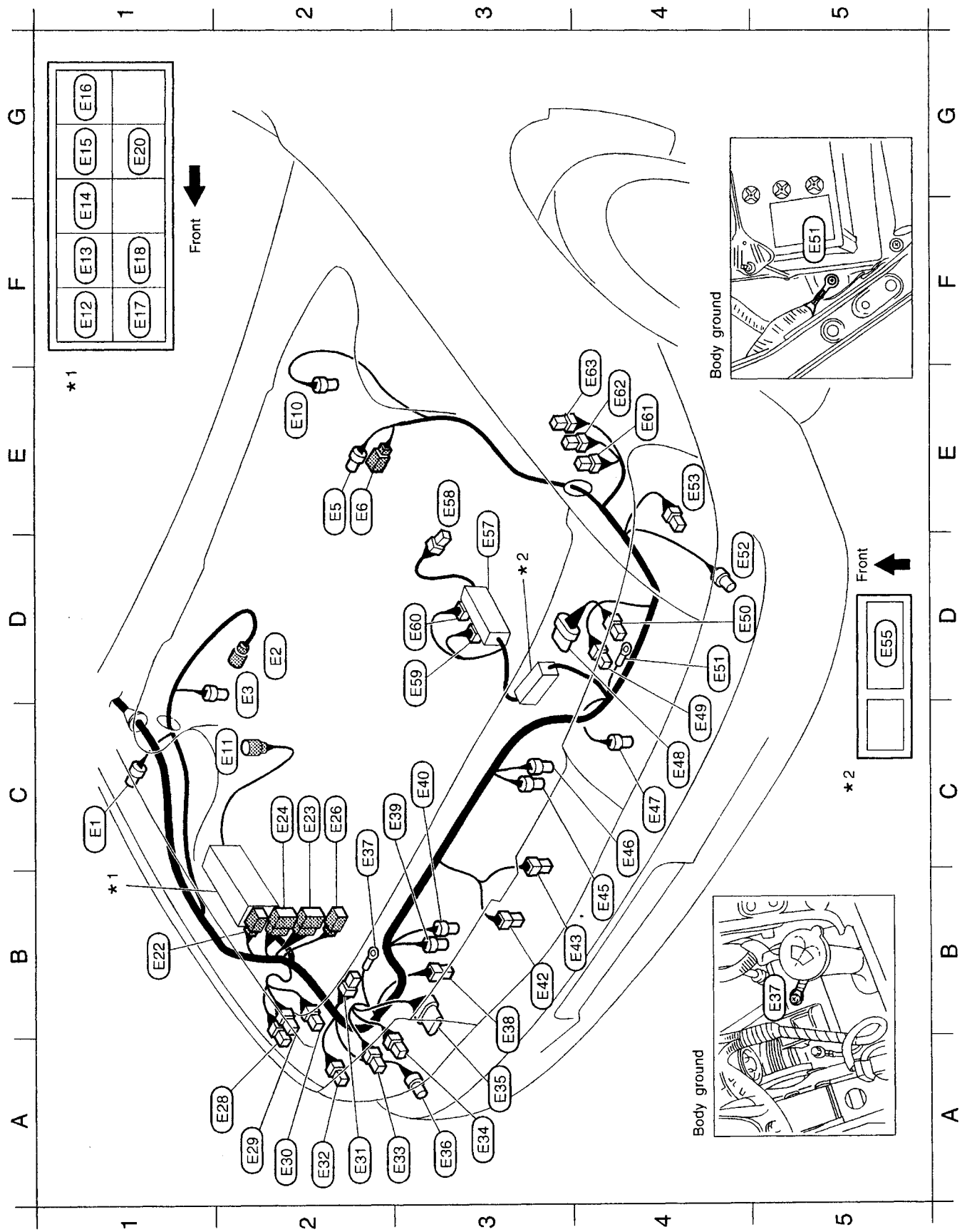

HEL156

Simpo PDF Merge and Split Unregistered Version - http://www.simpopdf.com

Engine Room Harness (Cont'd)

C1 (E1) GY/2 : Side turn signal lamp RH
D2 (E2) GY/2 : Brake fluid level switch
D2 (E3) GY/2 : Power steering oil pressure switch
E2 (E5) GY/2 : Fuel filter sensor (CD engine)
E2 (E6) B/1 : To (E228) (CD engine)
E2 (E10) GY/2 : ABS relay box (For ABS)
C2 (E11) GY/2 : Front wheel speed sensor RH (For ABS)
F1 (E12) L/4 : Cooling fan relay-1
(SR engine M/T models and GA engine)
BR/6 : Cooling fan relay-1
(SR engine A/T models and CD engine)
F1 (E13) W/3 : Horn relay
F1 (E14) L/4 : Inhibitor relay (A/T models)
G1 (E15) B/5 : Rear wiper relay
G1 (E16) L/4 : A/C relay
F1 (E17) BR/6 : Cooling fan relay-2
(A/T models for Australia and CD engine)
F1 (E18) BR/6 : Cooling fan relay-3
(SR engine A/T models and CD engine)
G1 (E20) L/4 : Rear fog lamp relay (For Europe)
B1 (E22) B/2 : To (E204)
C2 (E23) B/6 : To (E201) (SR engine M/T models and GA engine)
C2 (E24) B/8 : To (E202) (Gasoline engine)
C2 (E26) GY/8 : To (E203) (SR engine A/T models and CD engine)
A2 (E28) W/2 : Front washer motor
A2 (E29) G/2 : Rear washer motor
A2 (E30) B/2 : Washer fluid level switch (Except for Australia)
A2 (E31) GY/2 : To front fog lamp sub-harness
A2 (E32) B/2 : Front turn signal lamp RH

A3 (E33) B/2 : Clearance lamp RH
A3 (E34) B/3 : Headlamp RH
A3 (E35) GY/6 : Headlamp aiming motor unit RH (For Europe)
A3 (E36) GY/2 : Front fog lamp RH
C2 (E37) — : Body ground
B3 (E38) GY/1 : Brake vacuum switch (CD engine)
C3 (E39) GY/2 : Cooling fan motor-2 (1-mode type)
C3 (E40) GY/4 : Cooling fan motor-2 (2-mode type)
B3 (E42) B/1 : Horn high
B4 (E43) B/1 : Horn low (Except for New Zealand, LX and Q grade for Australia)
B4 (E45) GY/2 : Cooling fan motor-1 (1-mode type)
C4 (E46) GY/4 : Cooling fan motor-1 (2-mode type)
C4 (E47) B/2 : Dual-pressure switch
C4 (E48) GY/6 : Headlamp aiming motor unit LH (For Europe)
C4 (E49) B/3 : Headlamp LH
D4 (E50) B/2 : Clearance lamp LH
D4 (E51) — : Body ground
D4 (E52) GY/2 : Front fog lamp LH
E4 (E53) B/2 : Front turn signal lamp LH
D5 (E55) — : Fusible link
E3 (E57) — : Fusible link and fuse box
E3 (E58) B/1 : Battery
D3 (E59) B/1 : Fusible link and fuse box
D3 (E60) W/1 : Fusible link and fuse box
E4 (E61) G/2 : Glow relay (CD engine)
E4 (E62) W/1 : Glow relay (CD engine)
E4 (E63) W/1 : Glow relay (CD engine)

EL

HEL157

Simpo PDF Merge and Split Unregistered Version - http://www.simpopdf.com

Engine Room Harness (Cont'd)

PASSENGER COMPARTMENT — LHD models

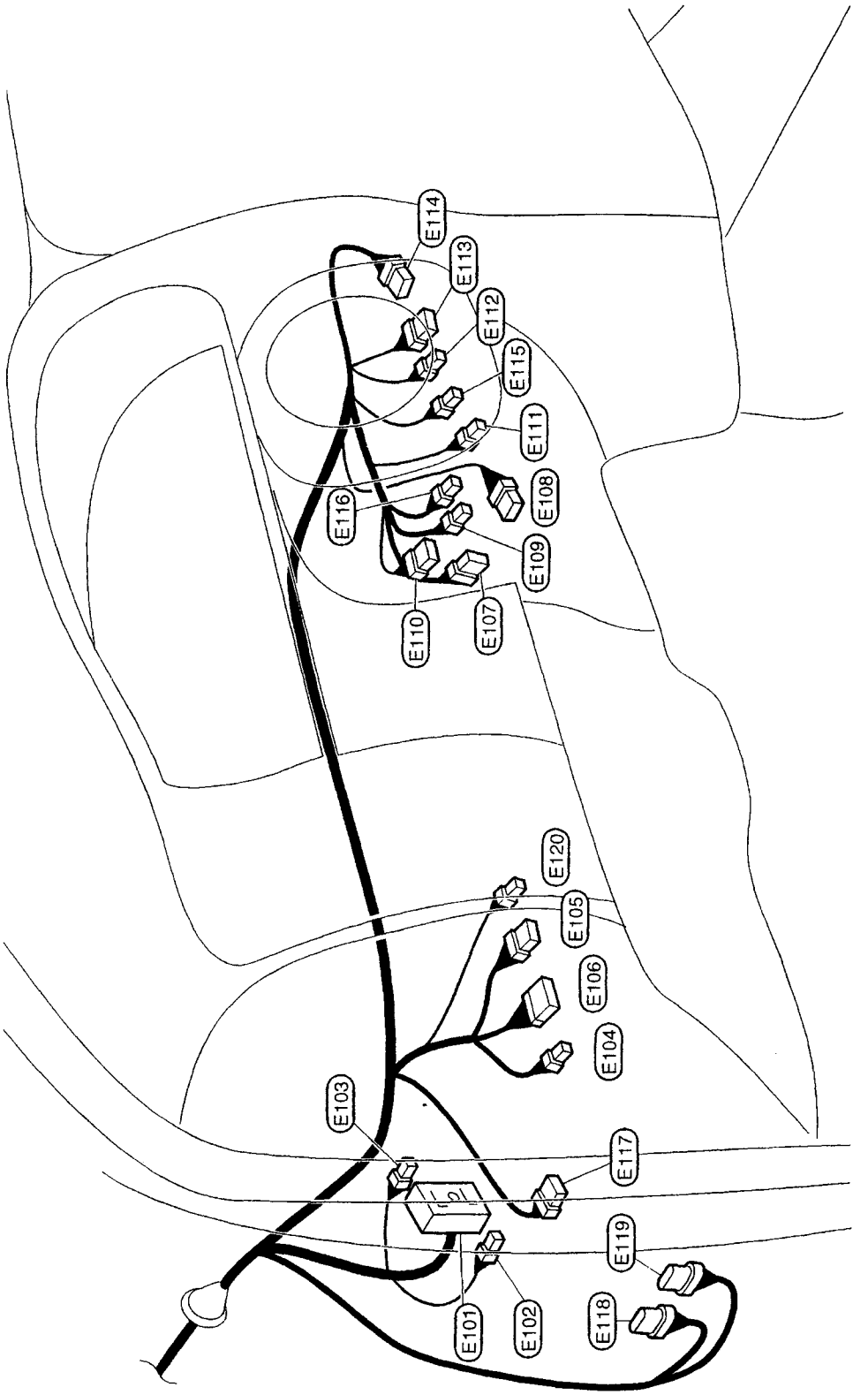

HEL158

Simpo PDF Merge and Split Unregistered Version - http://www.simpopdf.com

Engine Room Harness (Cont'd)

PASSENGER COMPARTMENT — RHD models

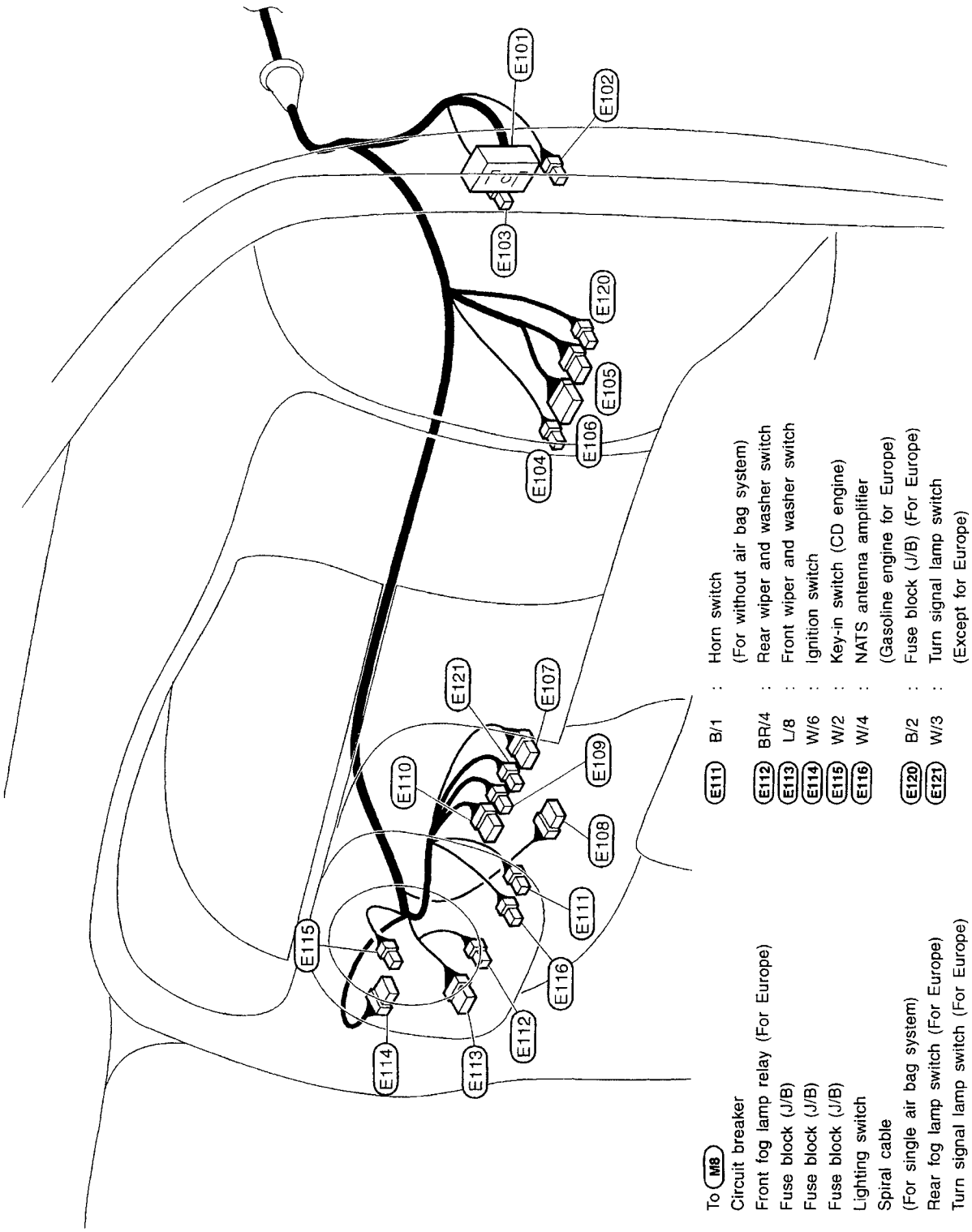

E101	SMJ	:	To M8		
E102	W/2	:	Circuit breaker	E111	B/1 : Horn switch
E103	L/4	:	Front fog lamp relay (For Europe)		(For without air bag system)
E104	B/2	:	Fuse block (J/B)	E112	BR/4 : Rear wiper and washer switch
E105	W/6	:	Fuse block (J/B)	E113	L/8 : Front wiper and washer switch
E106	W/16	:	Fuse block (J/B)	E114	W/6 : Ignition switch
E107	W/8	:	Lighting switch	E115	W/2 : Key-in switch (CD engine)
E108	BR/6	:	Spiral cable	E116	W/4 : NATS antenna amplifier
			(For single air bag system)		(Gasoline engine for Europe)
E109	W/3	:	Rear fog lamp switch (For Europe)	E120	B/2 : Fuse block (J/B) (For Europe)
E110	W/6	:	Turn signal lamp switch (For Europe)	E121	W/3 : Turn signal lamp switch
					(Except for Europe)

EL

HEL159

Simpo PDF Merge and Split Unregistered Version - http://www.simpopdf.com

Main Harness

LHD MODELS

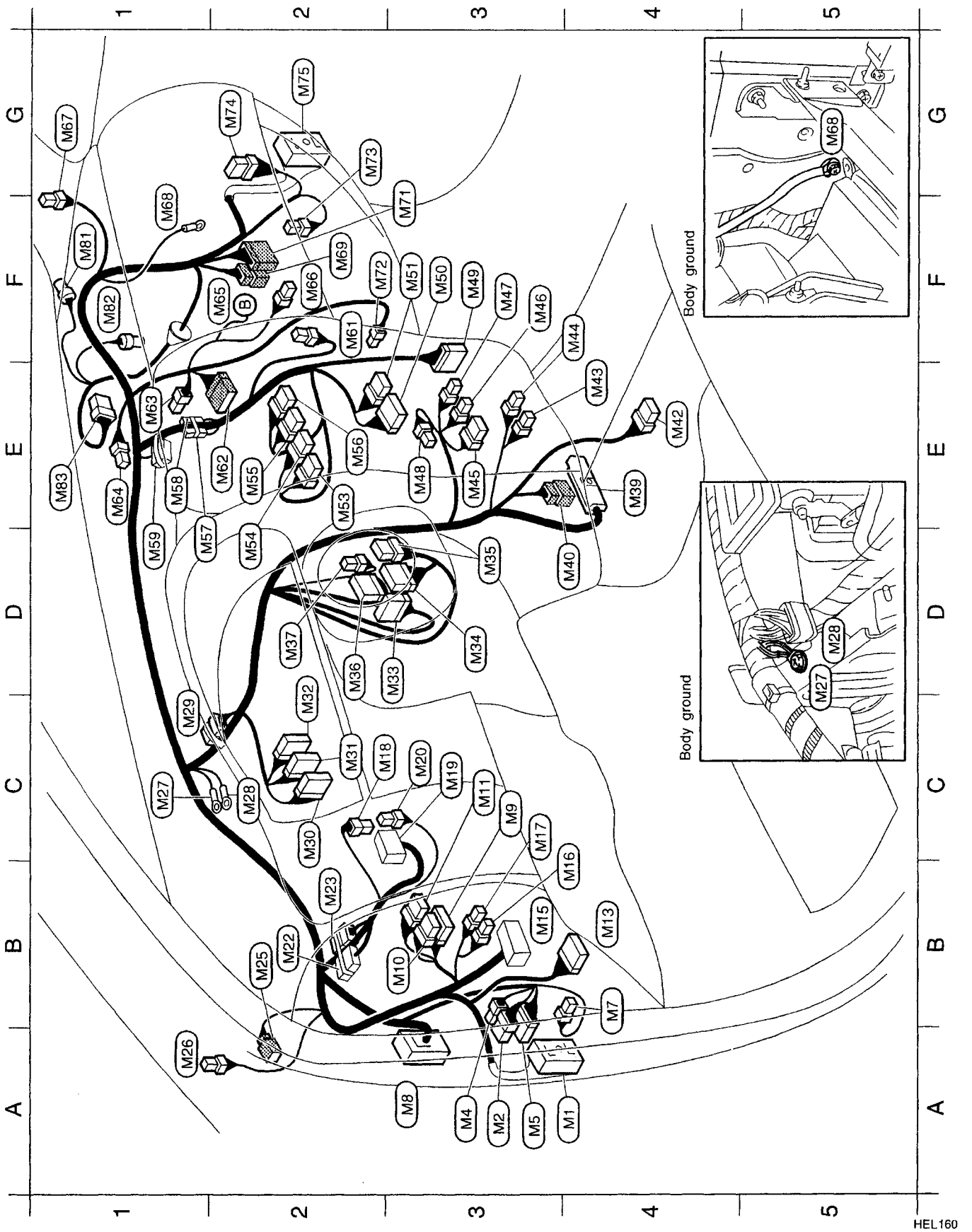

Simpo PDF Merge and Split Unregistered Version - http://www.simpopdf.com

Main Harness (Cont'd)

E3	M45	W/6	: Fan switch
F3	M46	W/4	: Recirculation switch
F3	M47	W/3	: A/C switch
E3	M48	W/3	: Fan switch illumination
F3	M49	W/20	: To F6 (Gasoline engine)
F3	M50	W/10	: Radio
F3	M51	W/6	: Radio (For rear speaker)
E2	M53	W/6	: Rear window defogger switch
D2	M54	W/8	: Hazard switch
E2	M55	BR/6	: Rear fog lamp switch
E2	M56	BR/8	: Headlamp wiper and washer switch (With daytime light system)
D1	M57	—	: Diode-1 (GA engine)
E1	M58	—	: Diode-2 (GA engine)
D1	M59	BR/20	: Joint connector-3
F2	M61	W/3	: Thermo control amplifier
E2	M62	Y/12	: To Z3 (For dual air bag system)
E1	M63	W/4	: Intake door motor
E1	M64	B/2	: NATS security indicator (Gasoline engine for Europe)
F2	M65	Bulb	: Glove box lamp
F2	M66	BR/2	: Glove box lamp switch
G1	M67	BR/2	: Pillar speaker RH (For 6-speaker system)
F1	M68	—	: Body ground
F2	M69	W/8	: To B113
F3	M71	W/12	: To B115
F2	M72	BR/4	: Fan resistor
G2	M73	W/2	: Blower motor
G2	M74	W/8	: Front wiper amplifier
G2	M75	SMJ	: To D31
F1	M81	GY/2	: Side turn signal lamp RH (Without ABS, dual air bag, daytime light system and rear power window)
F1	M82	GY/2	: Power steering oil pressure switch (GA engine without ABS, dual air bag, daytime light system and rear power window)
E1	M83	GY/6	: Front wiper motor (Without ABS, dual air bag, daytime light system and rear power window)

Diode-1 M57, Diode-2 M58

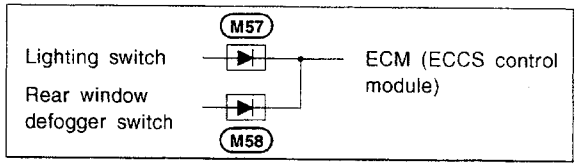

A4	M1	SMJ	: To D1
A3	M2	W/6	: To B4 (With power door lock)
A3	M4	W/4	: To B1
A3	M5	W/12	: To B2
B4	M7	L/4	: Fuel pump relay (Gasoline engine)
A3	M8	SMJ	: To E101
C3	M9	GY/12	: Door mirror remote control switch
B3	M10	B/6	: Front fog lamp switch
C3	M11	W/8	: Headlamp aiming switch
B4	M13	GY/14	: Data link connector for CONSULT
B3	M15	—	: Fuse block (J/B)
B4	M16	L/4	: Power window relay (With power window) Sun roof relay (Without power window)
C3	M17	L/4	: Mirror defogger relay (With daytime light system)
C2	M18	B/2	: Stop lamp switch
C3	M19	—	: Junction box No.2 (Joint connectors)
C3	M20	B/3	: Combination flasher unit
B2	M22	BR/20	: Joint connector-1
B2	M23	GY/6	: Joint connector-2
B2	M25	W/4	: To R1
A1	M26	BR/2	: Pillar speaker LH (For 6-speaker system)
C1	M27	—	: Body ground
C2	M28	—	: Body ground
C1	M29	W/6	: Joint connector-8
C2	M30	BR/16	: Combination meter
C2	M31	W/10	: Combination meter (With tachometer)
C2	M32	W/16	: Combination meter
D3	M33	B/12	: Warning buzzer unit
D3	M34	W/18	: Door lock timer (For Europe)
D3	M35	W/8	: Door lock timer (Except for Europe)
D2	M36	W/12	: NATS IMMU (Gasoline engine for Europe)
D2	M37	W/4	: Rear window defogger timer (With daytime light system)
E4	M39	L/48	: ECM (Engine control module) (Diesel engine)
D4	M40	W/6	: To F4 (Gasoline engine)
E4	M42	W/6	: Overdrive control switch • A/T illumination
E4	M43	B/2	: Cigarette lighter
F4	M44	W/2	: Ashtray illumination

Simpo PDF Merge and Split Unregistered Version - http://www.simpopdf.com

Main Harness (Cont'd)

RHD MODELS

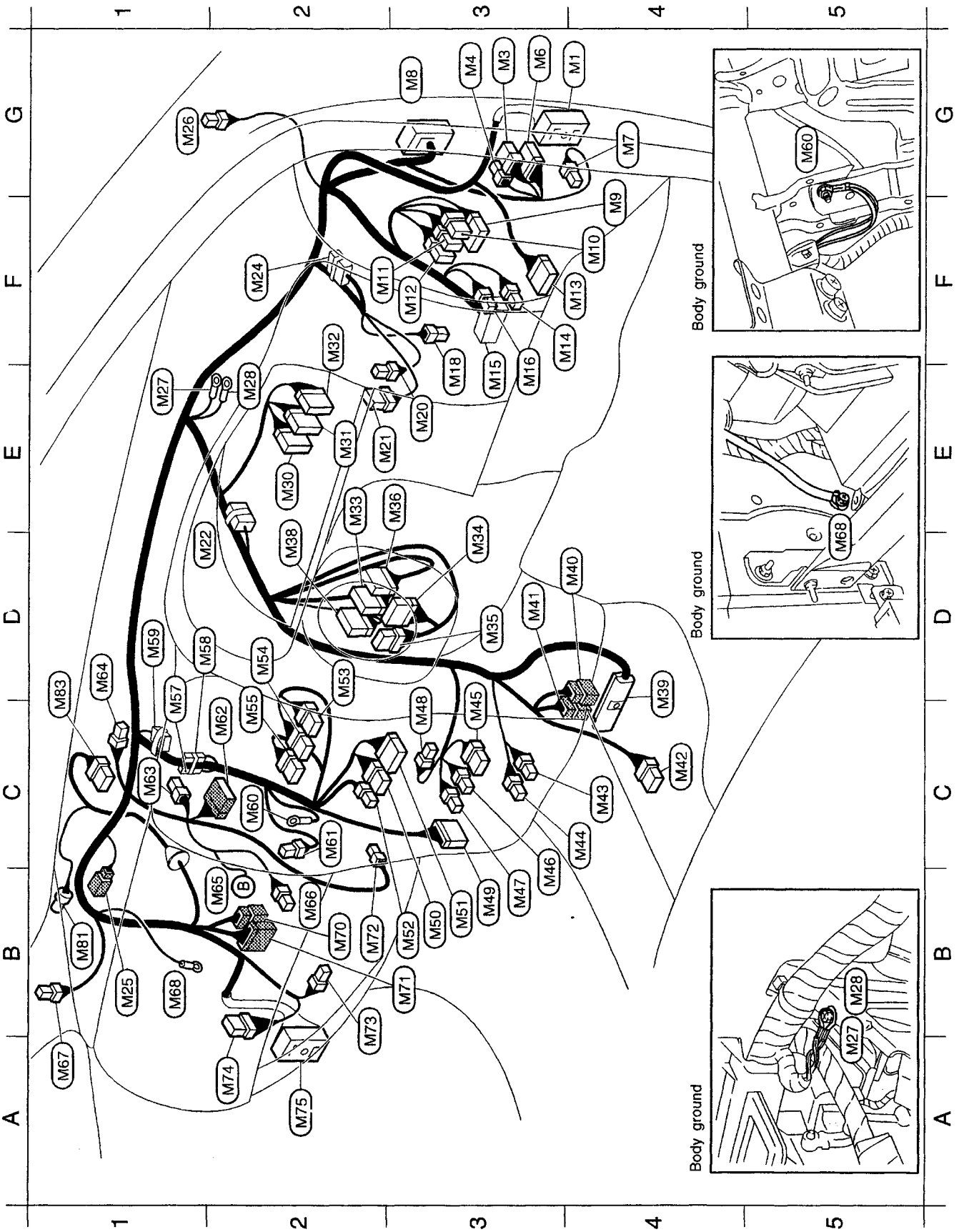

HEL162

Simpo PDF Merge and Split Unregistered Version - http://www.simpopdf.com

Main Harness (Cont'd)

G4 (M1) SMJ : To (D1)
G3 (M3) W/8 : To (B5) (With power door lock)
G3 (M4) W/4 : To (B1)
G3 (M6) W/20 : To (B3)
G4 (M7) L/4 : Fuel pump relay (Gasoline engine)
G3 (M8) SMJ : To (E101)
F4 (M9) GY/12 : Door mirror remote control switch
F4 (M10) B/6 : Front fog lamp switch
F2 (M11) W/8 : Headlamp aiming switch (For Europe)
F3 (M12) W/6 : Illumination control switch (Except for Europe)
F4 (M13) GY/14 : Data link connector for CONSULT
F3 (M14) B/2 : Fuse block (J/B) (Except for Europe)
E3 (M15) — : Fuse block (J/B)
E3 (M16) L/4 : Power window relay (With power window)
L/4 : Sun roof relay (Without power window)
E3 (M18) B/2 : Stop lamp switch
E3 (M20) B/3 : Combination flasher unit
E2 (M21) W/6 : Rear wiper amplifier
D1 (M22) BR/20 : Joint connector-1
F2 (M24) OR/20 : Joint connector-5
B1 (M25) W/4 : To (R1)
G1 (M26) BR/2 : Pillar speaker RH (For 6-speaker system)
E1 (M27) — : Body ground
E2 (M28) — : Body ground
E2 (M30) BR/16 : Combination meter
E2 (M31) W/10 : Combination meter (With tachometer)
F2 (M32) W/16 : Combination meter
E2 (M33) B/12 : Warning buzzer unit (Except for Australia)
D3 (M34) W/18 : Door lock timer (For Europe and Australia)
D3 (M35) W/8 : Door lock timer (Except for Europe and Australia)
E3 (M36) W/12 : NATS IMMU (Gasoline engine for Europe)
D2 (M38) W/8 : Warning buzzer unit (For Australia)
D4 (M39) L/48 : ECM (Engine control module) (Diesel engine)
D4 (M40) W/6 : To (F4) (Gasoline engine for Europe and Australia)
D3 (M41) W/8 : To (F5) (Except for Europe and Australia)
C4 (M42) W/6 : Overdrive control switch • A/T illumination

C4 (M43) B/2 : Cigarette lighter
C4 (M44) W/2 : Ashtray illumination
C3 (M45) W/6 : Fan switch
B3 (M46) W/4 : Recirculation switch
B3 (M47) W/3 : A/C switch
C3 (M48) W/3 : Fan switch illumination
B3 (M49) W/20 : To (F6) (Gasoline engine)
B3 (M50) W/10 : Radio
B3 (M51) W/6 : Radio (For rear speaker)
B3 (M52) W/4 : Compact disk deck (Except for Europe)
D2 (M53) W/6 : Rear window defogger switch
D2 (M54) W/8 : Hazard switch
C2 (M55) BR/6 : Rear fog lamp switch (For Europe)
D1 (M57) — : Diode-1 (GA engine except for Australia)
D1 (M58) — : Diode-2 (GA engine except for Australia)
D1 (M59) P/20 : Joint connector-4
C2 (M60) — : Body ground
C2 (M61) W/3 : Thermo control amplifier
C2 (M62) Y/12 : To (Z3) (For dual air bag system)
C1 (M63) W/4 : Intake door motor
D1 (M64) B/2 : NATS security indicator (Gasoline engine for Europe)
B2 (M65) Bulb : Glove box lamp
B2 (M66) BR/2 : Glove box lamp switch
A1 (M67) BR/2 : Pillar speaker LH (For 6-speaker system)
B1 (M68) — : Body ground
B2 (M70) W/12 : To (B114)
B3 (M71) W/12 : To (B115)
B2 (M72) BR/4 : Fan resistor
B2 (M73) W/2 : Blower motor
A2 (M74) W/8 : Front wiper amplifier
A2 (M75) SMJ : To (D31)
B1 (M81) GY/2 : Side turn signal lamp LH (GA engine without ABS, dual air bag and rear power window)
D1 (M83) GY/6 : Front wiper motor (GA engine without ABS, dual air bag and rear power window)

Diode-1 (M57), Diode-2 (M58)

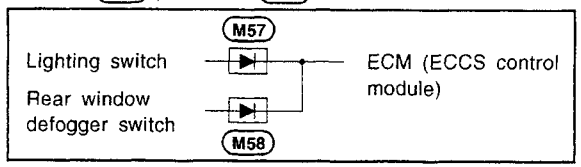

Simpo PDF Merge and Split Unregistered Version - http://www.simpopdf.com

Body Harness

3-DOOR HATCHBACK — LHD models

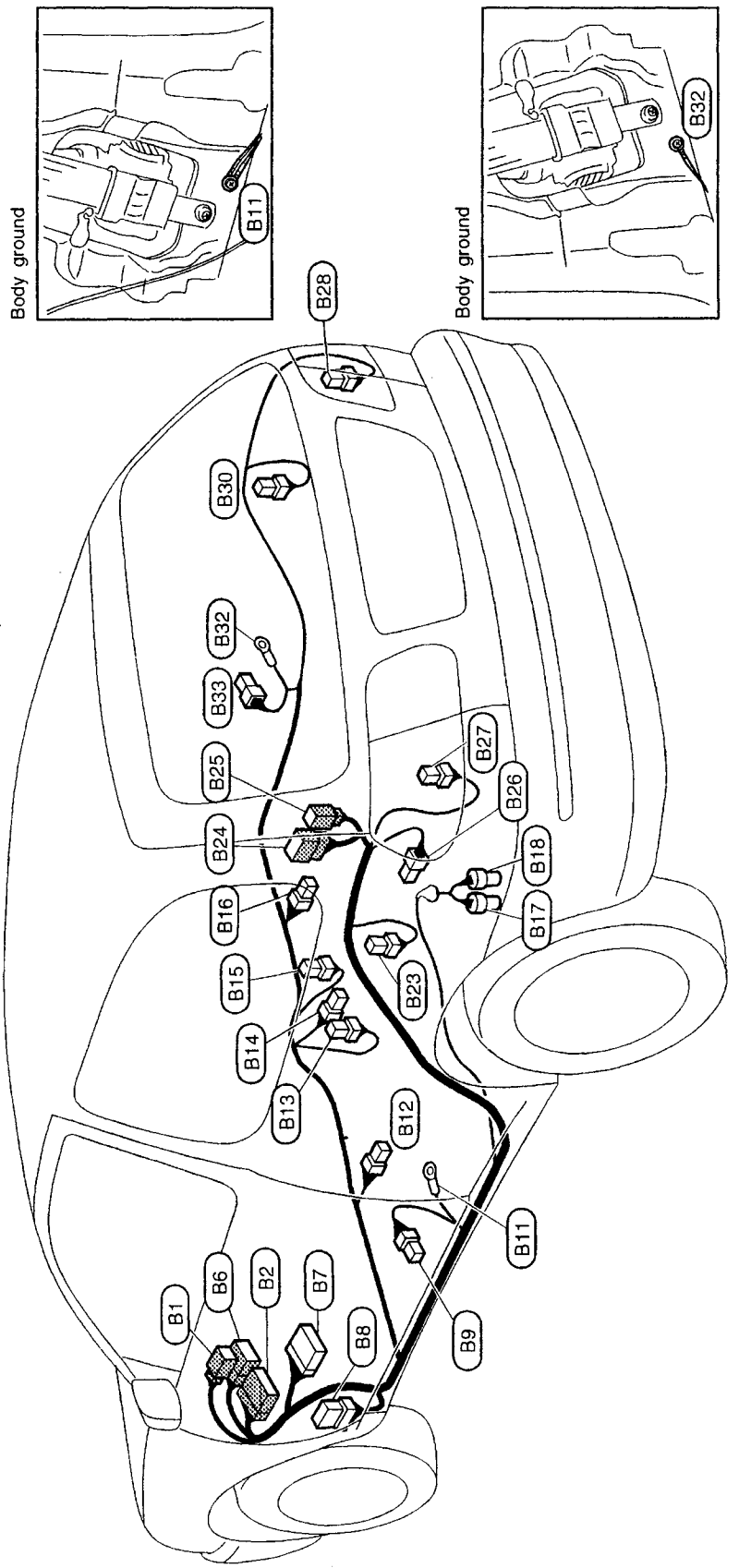

B1	W/4	: To M4	B17	GY/2	: To fuel pump sub-harness (Gasoline engine)
B2	W/12	: To M5	B18	GY/3	: Fuel tank gauge unit
B6	W/8	: To E117	B23	BR/2	: Rear speaker LH
B7	W/12	: Fuse block (J/B)	B24	W/8	: To D101
B8	W/6	: Rear wiper amplifier	B25	W/2	: To D102
B9	B/3	: Front door switch driver's side	B26	W/2	: Luggage room lamp
B11	—	: Body ground	B27	W/4	: Rear combination lamp LH (Outer)
B12	W/3	: Heated seat LH (With daytime light system)	B28	W/4	: Rear combination lamp RH (Outer)
B13	L/4	: Heated seat switch LH (With daytime light system)	B30	BR/2	: Rear speaker RH
B14	B/1	: Parking brake switch	B32	—	: Body ground
B15	W/4	: Heated seat switch RH (With daytime light system)	B33	BR/1	: Front door switch passenger side
B16	W/3	: Heated seat RH (With daytime light system)			

HEL170

Simpo PDF Merge and Split Unregistered Version - http://www.simpopdf.com

Body Harness (Cont'd)

3-DOOR HATCHBACK — RHD models

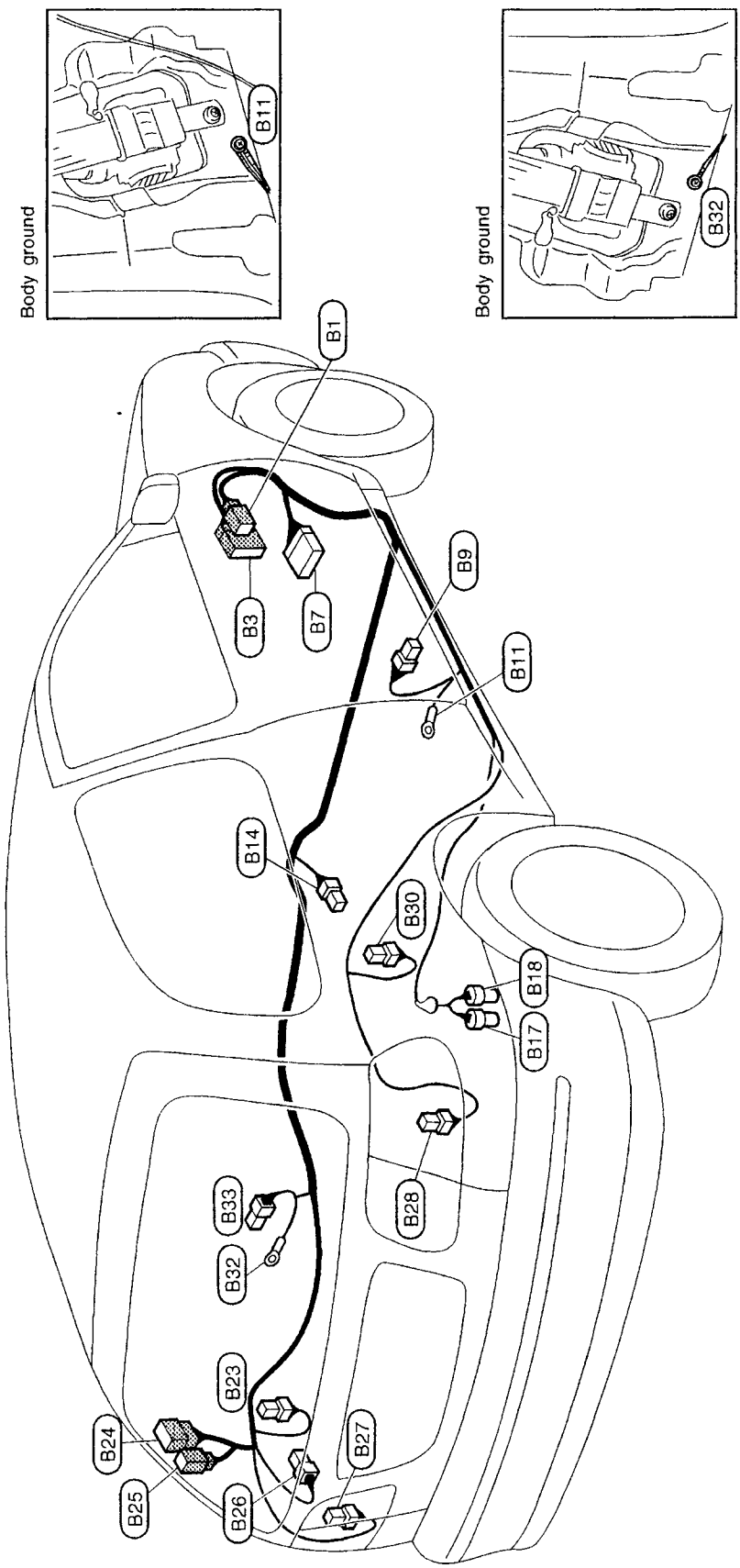

B1	W/4	:	To M4	B24	W/8	:	To D101
B3	W/20	:	To M6	B25	W/2	:	To D102
B7	W/12	:	Fuse block (J/B)	B26	W/2	:	Luggage room lamp
B9	B/3	:	Front door switch driver's side	B27	W/4	:	Rear combination lamp LH (Outer)
B11	—	:	Body ground	B28	W/4	:	Rear combination lsmp RH (Outer)
B14	B/1	:	Parking brake switch	B30	BR/2	:	Rear speaker RH
B17	GY/2	:	To fuel pump sub-harness	B32	—	:	Body ground
B18	GY/3	:	Fuel tank gauge unit	B33	BR/1	:	Front door switch passenger side
B23	BR/2	:	Rear speaker LH				

EL

HEL171

Simpo PDF Merge and Split Unregistered Version - http://www.simpopdf.com

Body Harness (Cont'd)

SEDAN — LHD models

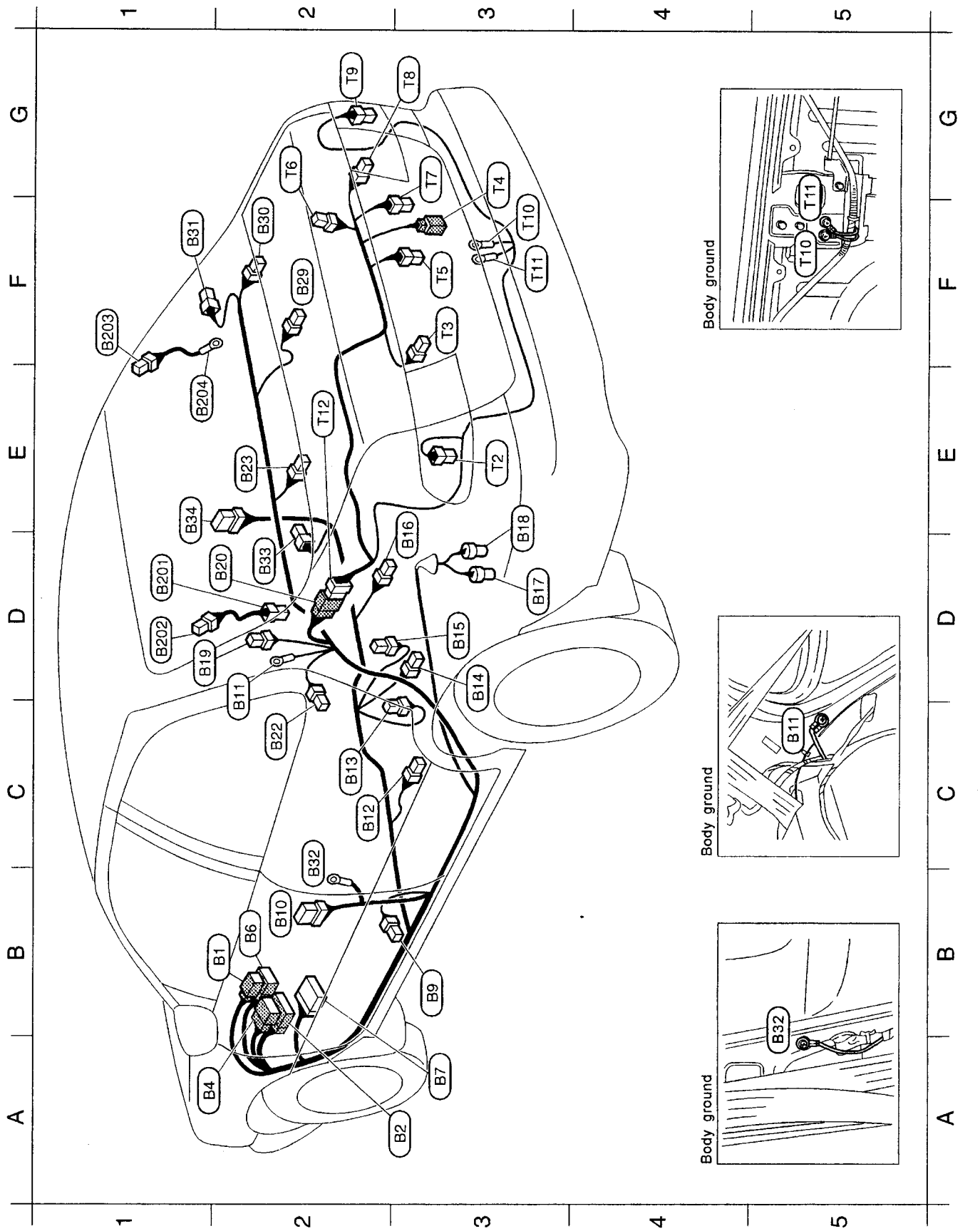

HEL172

Simpo PDF Merge and Split Unregistered Version - http://www.simpopdf.com

Body Harness (Cont'd)

Body harness

B2	B1	W/4	: To M4	
A3	B2	W/12	: To M5	
A1	B4	W/6	: To M2 (With power door lock)	
B2	B6	W/8	: To E117	
A3	B7	W/12	: Fuse block (J/B)	
B3	B9	B/3	: Front door switch driver's side	
B2	B10	W/6	: To D51 (With power door lock)	
D2	B11	—	: Body ground	
C2	B12	W/3	: Heated seat LH (With daytime light system)	
C2	B13	L/4	: Heated seat switch LH (With daytime light system)	
D3	B14	B/1	: Parking brake switch	
D3	B15	W/4	: Heated seat switch RH (With daytime light system)	
D3	B16	W/3	: Heated seat RH (With daytime light system)	
D3	B17	GY/2	: To fuel pump sub-harness (Gasoline engine)	
D3	B18	GY/3	: Fuel tank gauge unit	
D2	B19	B/1	: Condenser (For rear window defogger)	
D2	B20	W/8	: To T12	
C2	B22	BR/1	: Rear door switch LH	
E2	B23	BR/2	: Rear speaker LH	
F2	B29	W/2	: Trunk room lamp	
F2	B30	BR/2	: Rear speaker RH	
F1	B31	BR/1	: Rear door switch RH	
C2	B32	—	: Body ground	
D2	B33	BR/1	: Front door switch passenger side	
E1	B34	W/6	: To D71 (With power door lock)	

Tail harness

E3	T2	W/4	:	Rear combination lamp LH (Outer)
F3	T3	W/4	:	Rear combination lamp LH (Inner)
G3	T4	B/2	:	Trunk room lamp switch
F3	T5	W/2	:	License plate lamp LH
G2	T6	BR/2	:	High-mounted stop lamp
G3	T7	W/2	:	License plate lamp RH
G3	T8	W/4	:	Rear combination lamp RH (Inner)
G2	T9	W/4	:	Rear combination lamp RH (Outer)
F3	T10	—	:	Body ground
F3	T11	—	:	Body ground
E2	T12	W/8	:	To B20

Sub-harness

D1	B201	B/1	:	Condenser
D1	B202	B/1	:	Rear window defogger (+)
F1	B203	B/1	:	Rear window defogger (−)
E1	B204	—	:	Body ground

EL

HEL173

Simpo PDF Merge and Split Unregistered Version - http://www.simpopdf.com

Body Harness (Cont'd)

SEDAN — RHD models

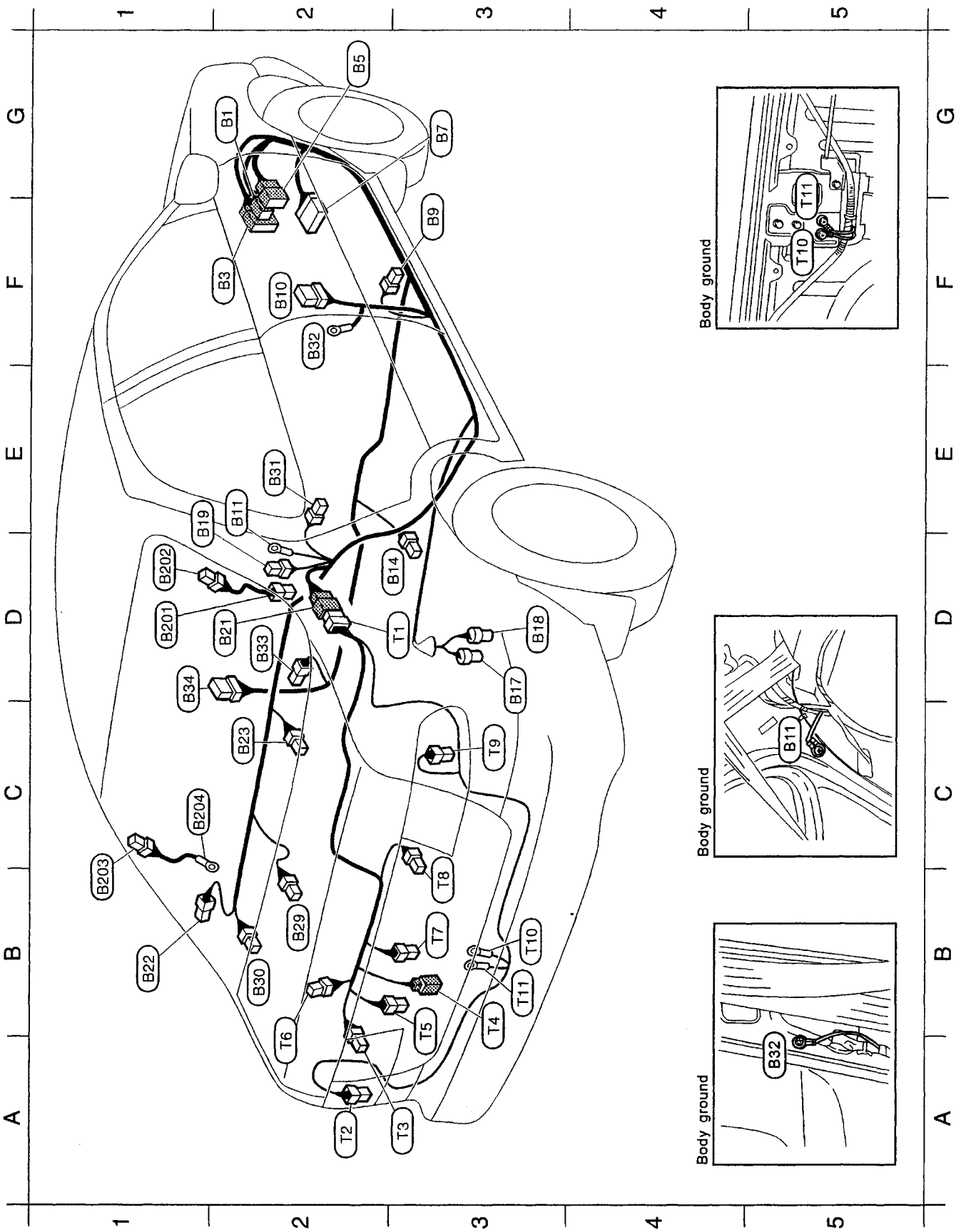

HEL174

Simpo PDF Merge and Split Unregistered Version - http://www.simpopdf.com

Body Harness (Cont'd)

Body harness

G2	B1	W/4	:	To M4
F2	B3	W/20	:	To M6
G2	B5	W/8	:	To M3 (With power door lock)
G3	B7	W/12	:	Fuse block (J/B)
F3	B9	B/3	:	Front door switch driver's side
F2	B10	W/6	:	To D51 (With power door lock)
E2	B11	—	:	Body ground
D3	B14	B/1	:	Parking brake switch
D3	B17	GY/2	:	To fuel pump sub-harness (Gasoline engine)
D3	B18	GY/3	:	Fuel tank gauge unit
E1	B19	B/1	:	Condenser(For rear window defogger)
D2	B21	W/8	:	To T1
B1	B22	BR/1	:	Rear door switch LH
C2	B23	BR/2	:	Rear speaker LH
B2	B29	W/2	:	Trunk room lamp
B2	B30	BR/2	:	Rear speaker RH
E2	B31	BR/1	:	Rear door switch RH
F2	B32	—	:	Body ground
D2	B33	BR/1	:	Front door switch passenger side
D1	B34	W/6	:	To D71 (With power door lock)

Tail harness

D3	T1	W/8	:	To B21
A2	T2	W/4	:	Rear combination lamp LH (Outer)
A3	T3	W/4	:	Rear combination lamp LH (Inner)
B3	T4	B/2	:	Trunk room lamp switch
B3	T5	W/2	:	License plate lamp LH
A2	T6	BR/2	:	High-mounted stop lamp
B3	T7	W/2	:	License plate lamp RH
B3	T8	W/4	:	Rear combination lamp RH (Inner)
C3	T9	W/4	:	Rear combination lamp RH (Outer)
B3	T10	—	:	Body ground
B3	T11	—	:	Body ground

Sub-harness

D1	B201	B/1	:	Condenser
D1	B202	B/1	:	Rear window defogger (+)
B1	B203	B/1	:	Rear window defogger (–)
C1	B204	—	:	Body ground

EL

HEL175

Simpo PDF Merge and Split Unregistered Version - http://www.simpopdf.com

Body Harness (Cont'd)

5-DOOR HATCHBACK — LHD models

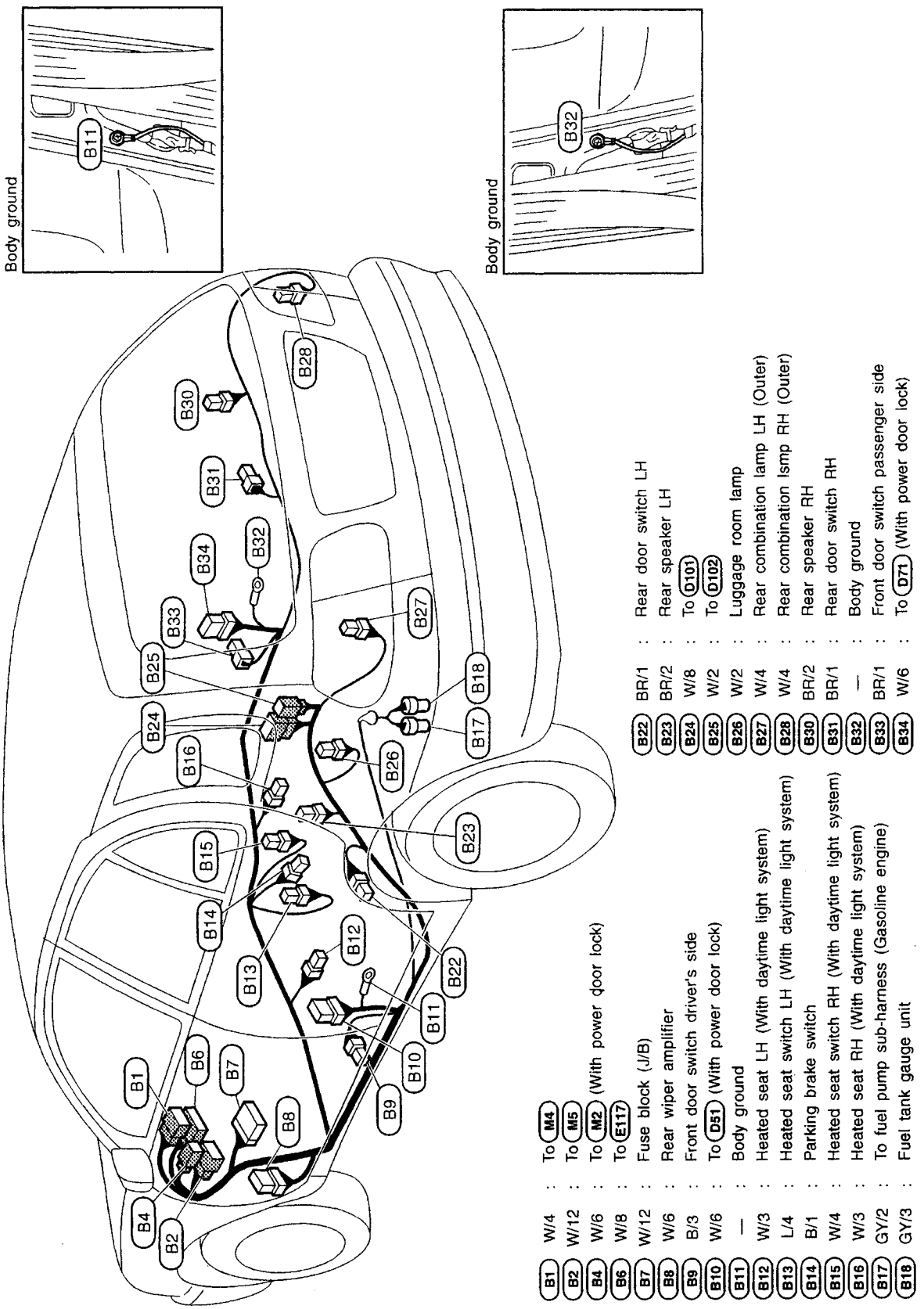

B1	W/4	: To M4	
B2	W/12	: To M5	
B4	W/6	: To M2 (With power door lock)	
B6	W/8	: To E117	
B7	W/12	: Fuse block (J/B)	
B8	W/6	: Rear wiper amplifier	
B9	B/3	: Front door switch driver's side	
B10	W/6	: To D51 (With power door lock)	
B11	—	: Body ground	
B12	W/3	: Heated seat LH (With daytime light system)	
B13	L/4	: Heated seat switch LH (With daytime light system)	
B14	B/1	: Parking brake switch	
B15	W/4	: Heated seat switch RH (With daytime light system)	
B16	W/3	: Heated seat RH (With daytime light system)	
B17	GY/2	: To fuel pump sub-harness (Gasoline engine)	
B18	GY/3	: Fuel tank gauge unit	
B22	BR/1	: Rear door switch LH	
B23	BR/2	: Rear speaker LH	
B24	W/8	: To D101	
B25	W/2	: To D102	
B26	W/2	: Luggage room lamp	
B27	W/4	: Rear combination lamp LH (Outer)	
B28	W/4	: Rear combination lamp RH (Outer)	
B30	BR/2	: Rear speaker RH	
B31	BR/1	: Rear door switch RH	
B32	—	: Body ground	
B33	BR/1	: Front door switch passenger side	
B34	W/6	: To D71 (With power door lock)	

HEL176

Simpo PDF Merge and Split Unregistered Version - http://www.simpopdf.com

Body Harness (Cont'd)

5-DOOR HATCHBACK — RHD models

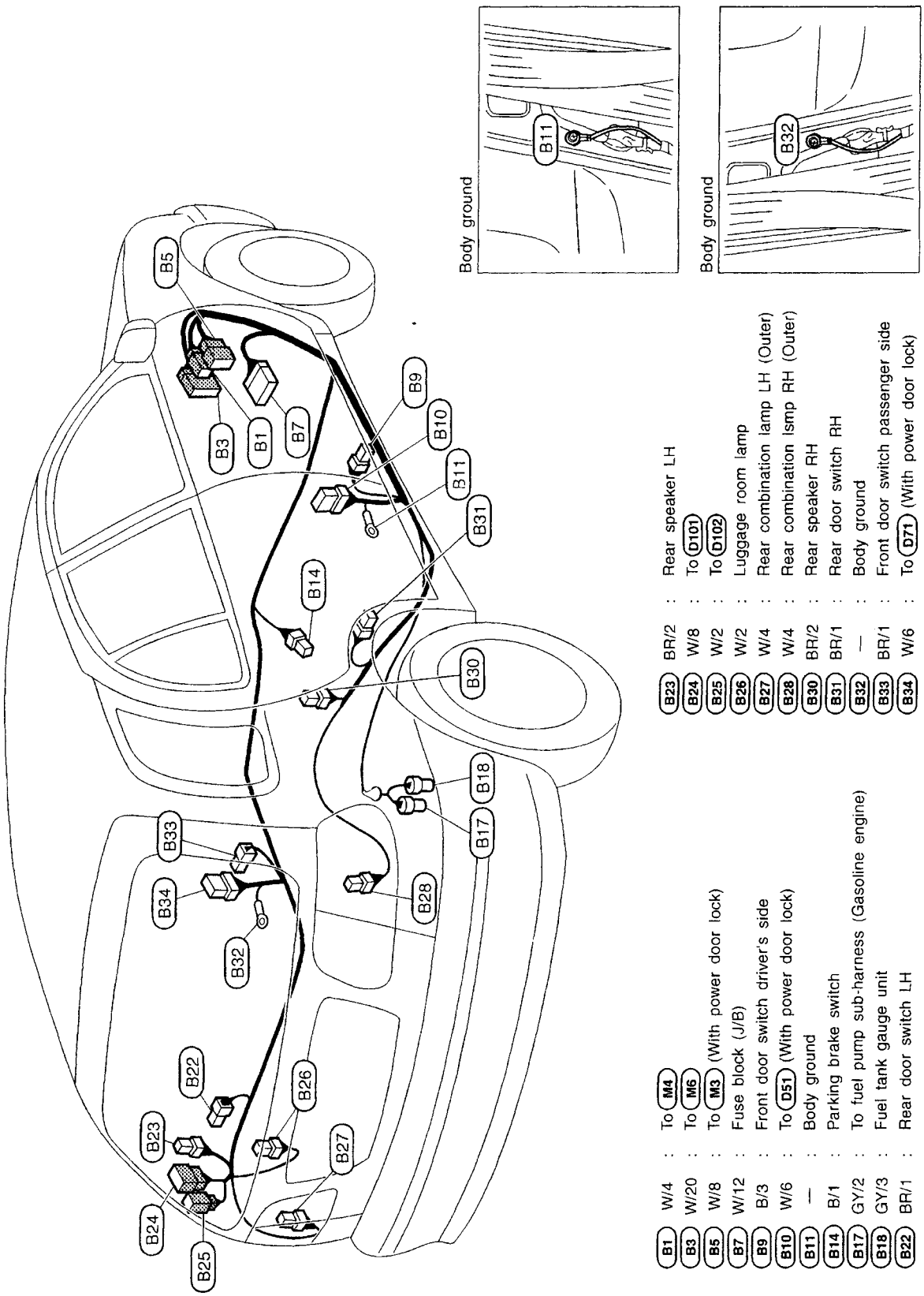

B1	W/4	: To M4		B23	BR/2	:	Rear speaker LH
B3	W/20	: To M6		B24	W/8	:	To D101
B5	W/8	: To M3 (With power door lock)		B25	W/2	:	To D102
B7	W/12	: Fuse block (J/B)		B26	W/2	:	Luggage room lamp
B9	B/3	: Front door switch driver's side		B27	W/4	:	Rear combination lamp LH (Outer)
B10	W/6	: To D51 (With power door lock)		B28	W/4	:	Rear combination lsmp RH (Outer)
B11	—	: Body ground		B30	BR/2	:	Rear speaker RH
B14	B/1	: Parking brake switch		B31	BR/1	:	Rear door switch RH
B17	GY/2	: To fuel pump sub-harness (Gasoline engine)		B32	—	:	Body ground
B18	GY/3	: Fuel tank gauge unit		B33	BR/1	:	Front door switch passenger side
B22	BR/1	: Rear door switch LH		B34	W/6	:	To D71 (With power door lock)

EL

HEL177

Simpo PDF Merge and Split Unregistered Version - http://www.simpopdf.com

Body No. 2 Harness

LHD MODELS

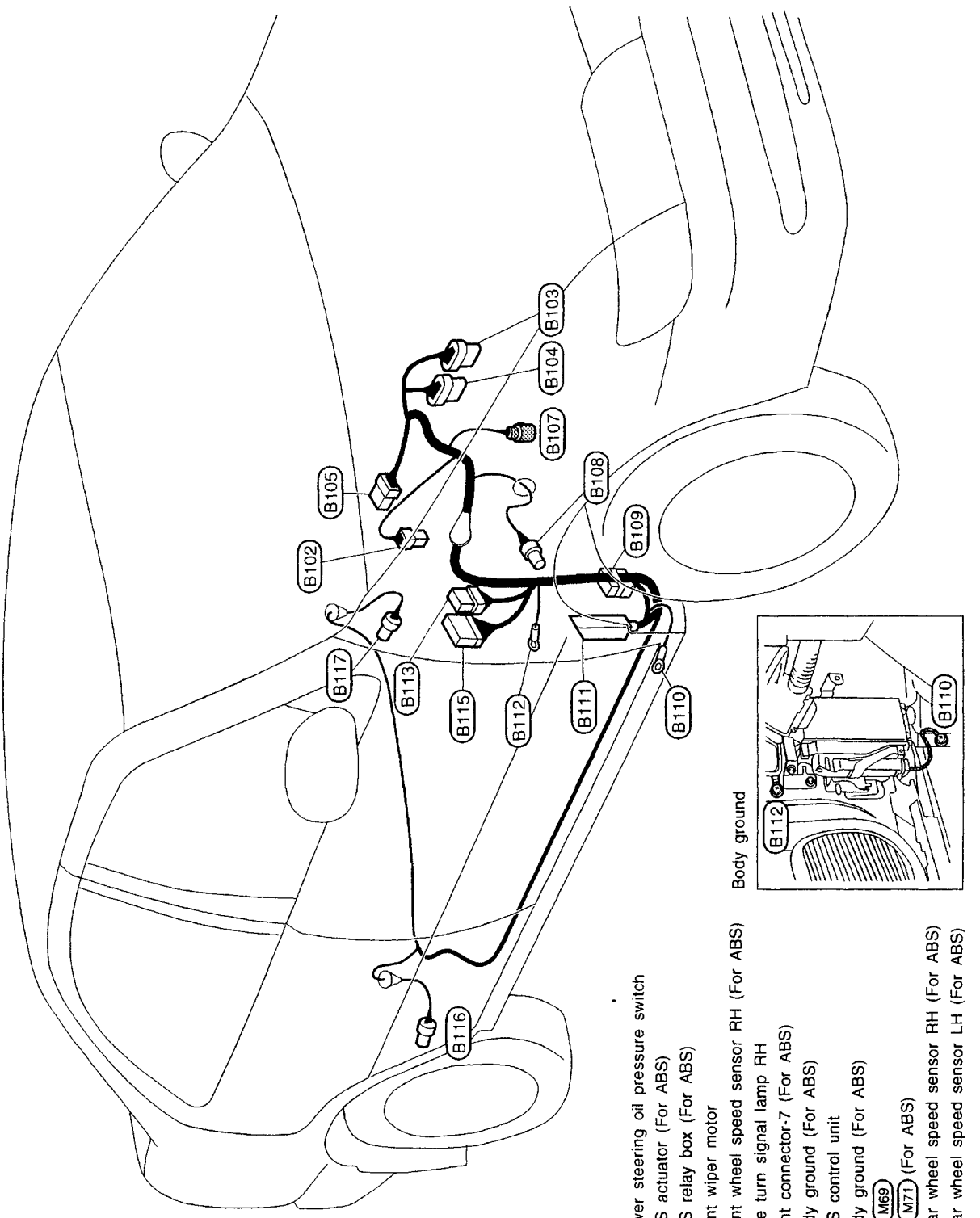

B102	GY/2	Power steering oil pressure switch
B103	GY/8	ABS actuator (For ABS)
B104	B/6	ABS relay box (For ABS)
B105	GY/6	Front wiper motor
B107	GY/2	Front wheel speed sensor RH (For ABS)
B108	GY/2	Side turn signal lamp RH
B109	GY/6	Joint connector-7 (For ABS)
B110	—	Body ground (For ABS)
B111	B/88	ABS control unit
B112	—	Body ground (For ABS)
B113	W/8	To (M69)
B115	W/12	To (M71) (For ABS)
B116	GY/2	Rear wheel speed sensor RH (For ABS)
B117	BR/2	Rear wheel speed sensor LH (For ABS)

HEL178

Simpo PDF Merge and Split Unregistered Version - http://www.simpopdf.com

Body No. 2 Harness (Cont'd)

RHD MODELS

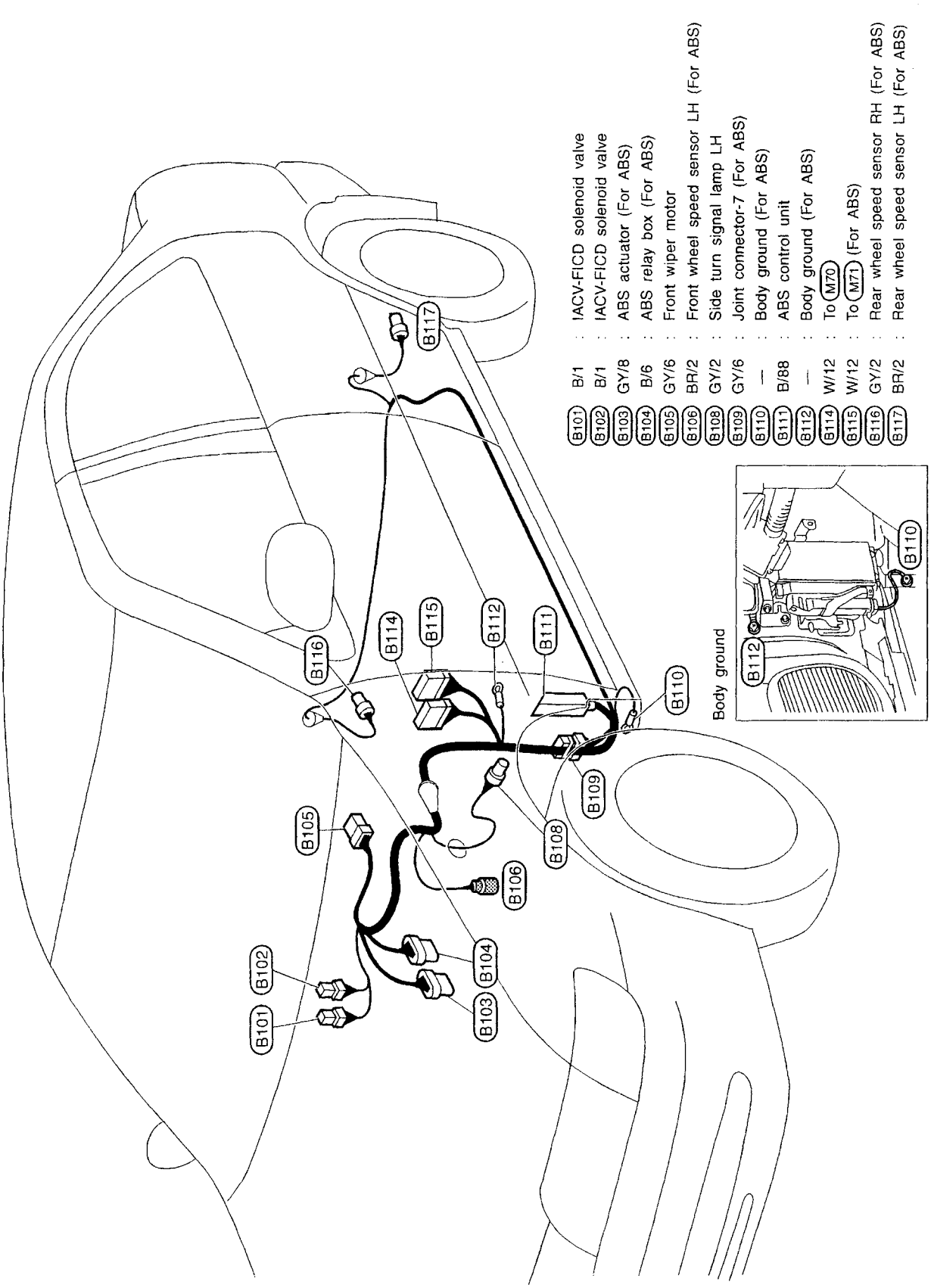

EL

HEL179

Simpo PDF Merge and Split Unregistered Version - http://www.simpopdf.com

Engine Harness

GA ENGINE

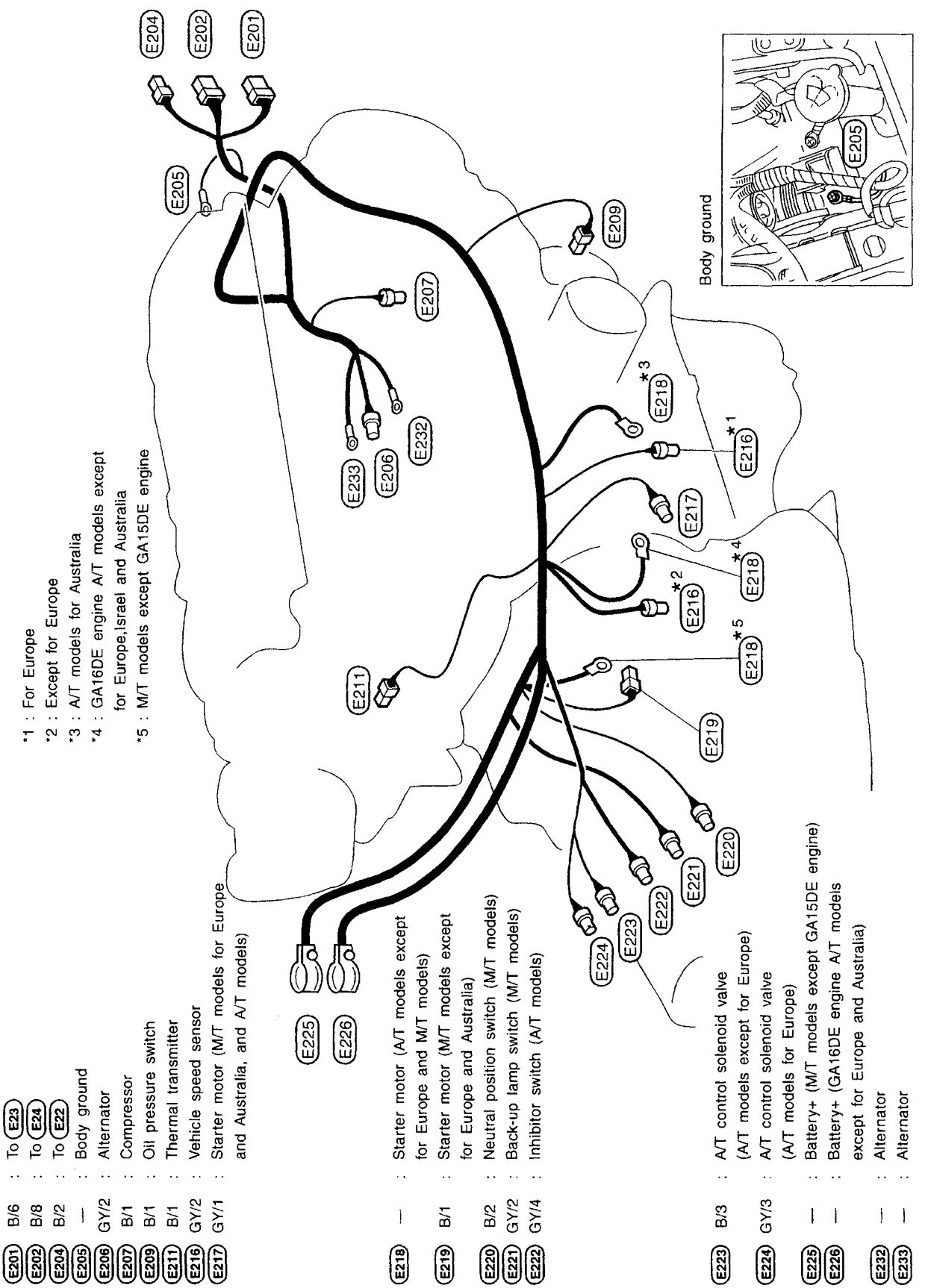

*1 : For Europe
*2 : Except for Europe
*3 : A/T models for Australia
*4 : GA16DE engine A/T models except for Europe,Israel and Australia
*5 : M/T models except GA15DE engine

E201	B/6	To E23
E202	B/8	To E24
E204	B/2	To E22
E205	—	Body ground
E206	GY/2	Alternator
E207	B/1	Compressor
E209	B/1	Oil pressure switch
E211	B/1	Thermal transmitter
E216	GY/2	Vehicle speed sensor
E217	GY/1	Starter motor (M/T models for Europe and Australia, and A/T models)
E218	—	Starter motor (A/T models except for Europe and M/T models)
E219	B/1	Starter motor (M/T models except for Europe and Australia)
E220	B/2	Neutral position switch (M/T models)
E221	GY/2	Back-up lamp switch (M/T models)
E222	GY/4	Inhibitor switch (A/T models)
E223	B/3	A/T control solenoid valve (A/T models except for Europe)
E224	GY/3	A/T control solenoid valve (A/T models for Europe)
E225	—	Battery+ (M/T models except GA15DE engine)
E226	—	Battery+ (GA16DE engine A/T models except for Europe and Australia)
E232	—	Alternator
E233	—	Alternator

HEL167

Simpo PDF Merge and Split Unregistered Version - http://www.simpopdf.com

Engine Harness (Cont'd)

SR ENGINE

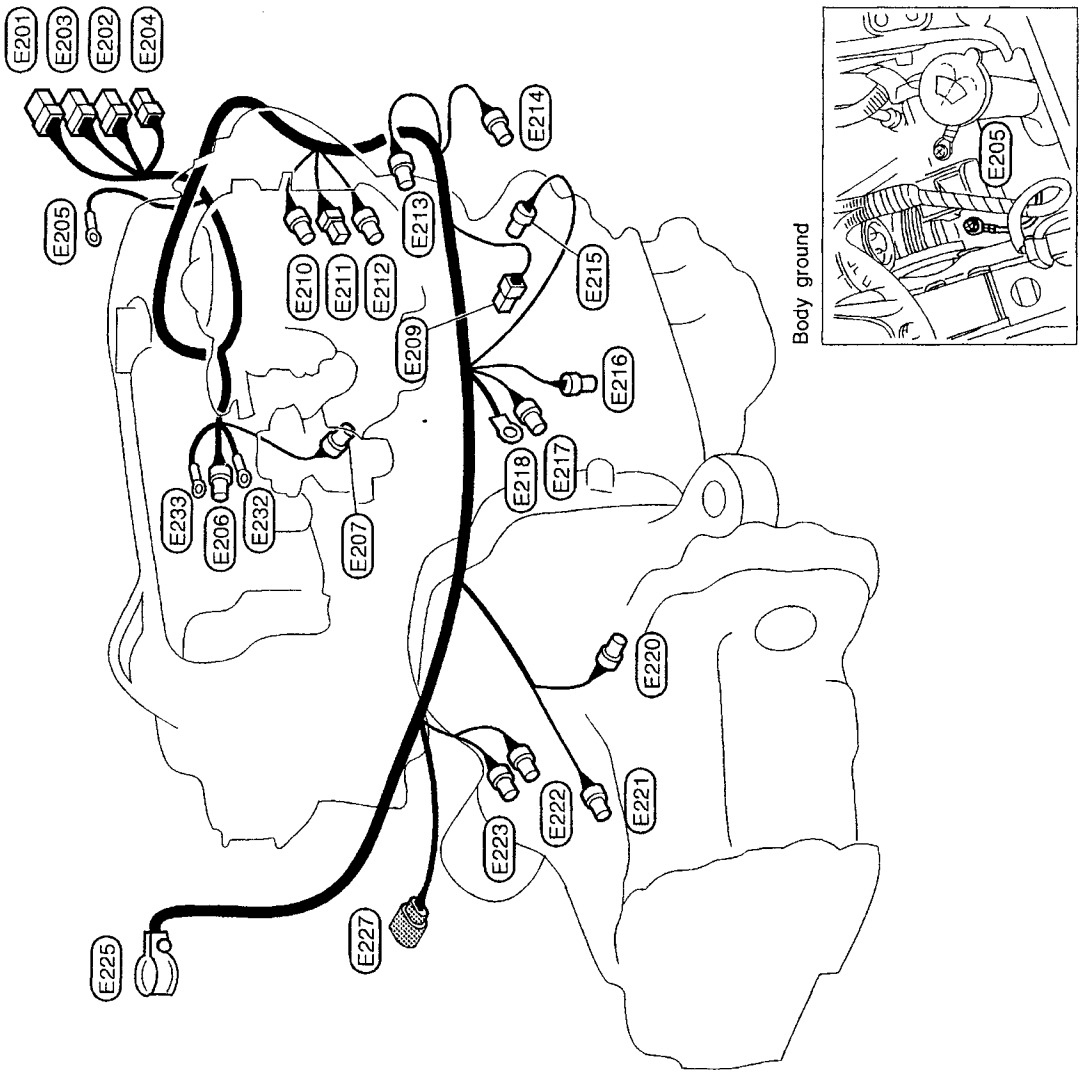

E201	B/6	: To E23 (M/T models)	
E202	B/8	: To E24	
E203	GY/8	: To E26 (A/T models)	
E204	B/2	: To E22	
E205	—	: Body ground	
E206	GY/2	: Alternator	
E207	B/1	: Compressor	
E209	B/1	: Oil pressure switch	
E210	L/2	: Engine coolant temperature sensor	
E211	B/1	: Thermal transmitter	
E212	GY/2	: IACV-FICD solenoid valve	
E213	BR/2	: IACV-AAC valve	
E214	GY/2	: IACV-Air regulator	
E215	B/2	: Knock sensor	
E216	GY/2	: Vehicle speed sensor	
E217	GY/1	: Starter motor	
E218	—	: Starter motor	
E220	B/2	: Neutral position switch (M/T models)	
E221	GY/2	: Back-up lamp switch (M/T models)	
E222	GY/4	: Inhibitor switch (A/T models)	
E223	B/3	: A/T control solenoid valve (A/T models)	
E225	—	: Battery+	
E227	GY/6	: To F12	
E232	—	: Alternator	
E233	—	: Alternator	

EL

HEL168

Simpo PDF Merge and Split Unregistered Version - http://www.simpopdf.com

Engine Harness (Cont'd)

CD ENGINE

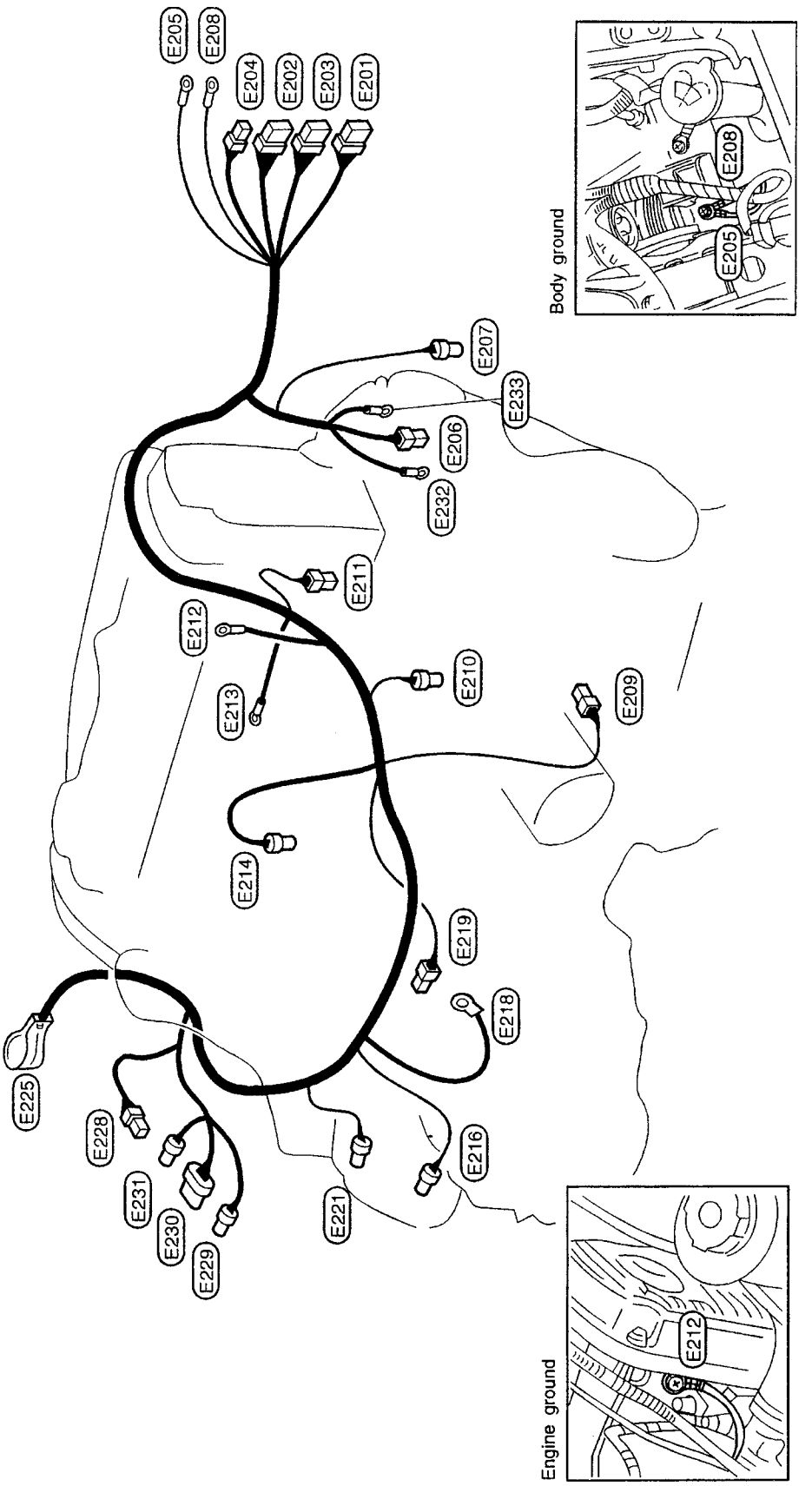

E201	GY/4	: To E27 (LHD models)	E210	GY/2	: Engine coolant temperature sensor	E225	— : Battery+
E202	B/8	: To E24 (RHD models)	E211	B/1	: Thermal transmitter	E228	B/1 : To E6
E203	GY/8	: To E26 (RHD models)	E212	—	: Engine ground	E229	GY/1 : To E7 (LHD models)
E204	B/2	: To E22	E213	—	: Glow plug	E230	B/8 : To E9 (LHD models)
E205	—	: Body ground	E214	GY/4	: Injection pump	E231	GY/4 : To E8 (LHD models)
E206	GY/2	: Alternator	E216	GY/2	: Vehicle speed sensor	E232	— : Alternator
E207	B/1	: Compressor	E218	—	: Starter motor	E233	— : Alternator
E208	—	: Body ground	E219	B/1	: Starter motor		
E209	B/1	: Oil pressuer switch	E221	GY/2	: Back-up lamp switch		

HEL169

Simpo PDF Merge and Split Unregistered Version - http://www.simpopdf.com

Air Bag Harness

LHD MODELS

Z1 Y/24 : Air bag diagnosis sensor unit
Z2 Y/6 : Spiral cable
Z3 Y/12 : To M62
Z4 Y/2 : Air bag module (Passenger side)

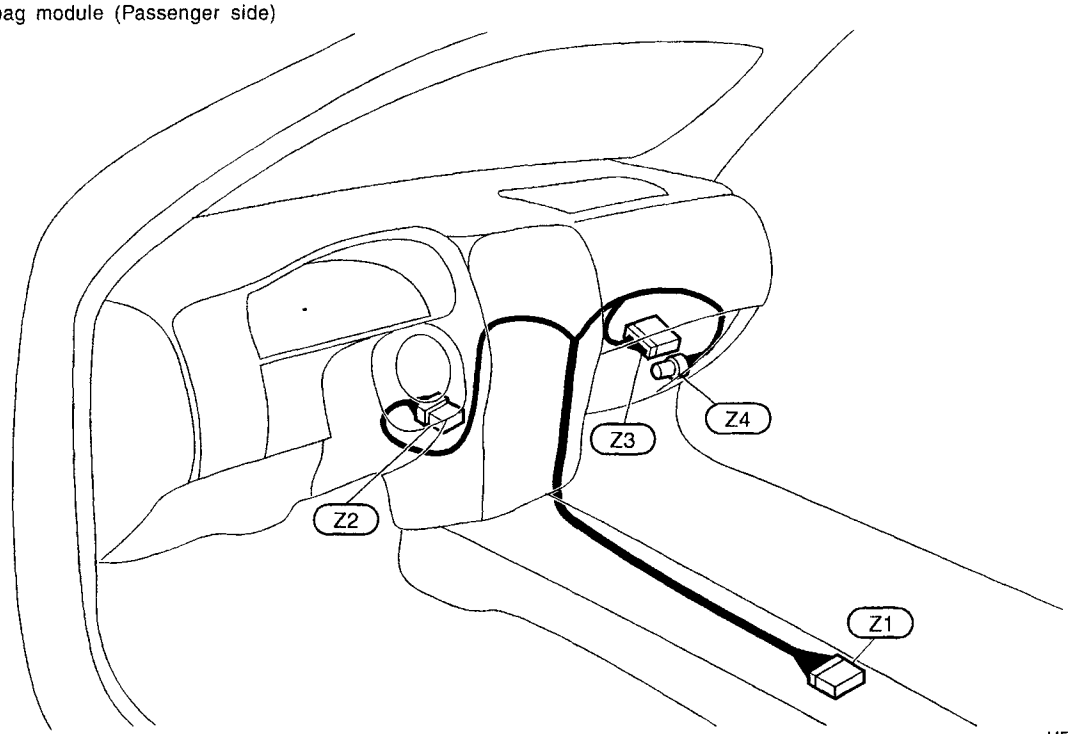

HEL180

RHD MODELS

Z1 Y/24 : Air bag diagnosis sensor unit
Z2 Y/6 : Spiral cable
Z3 Y/12 : To M62
Z4 Y/2 : Air bag module (Passenger side)

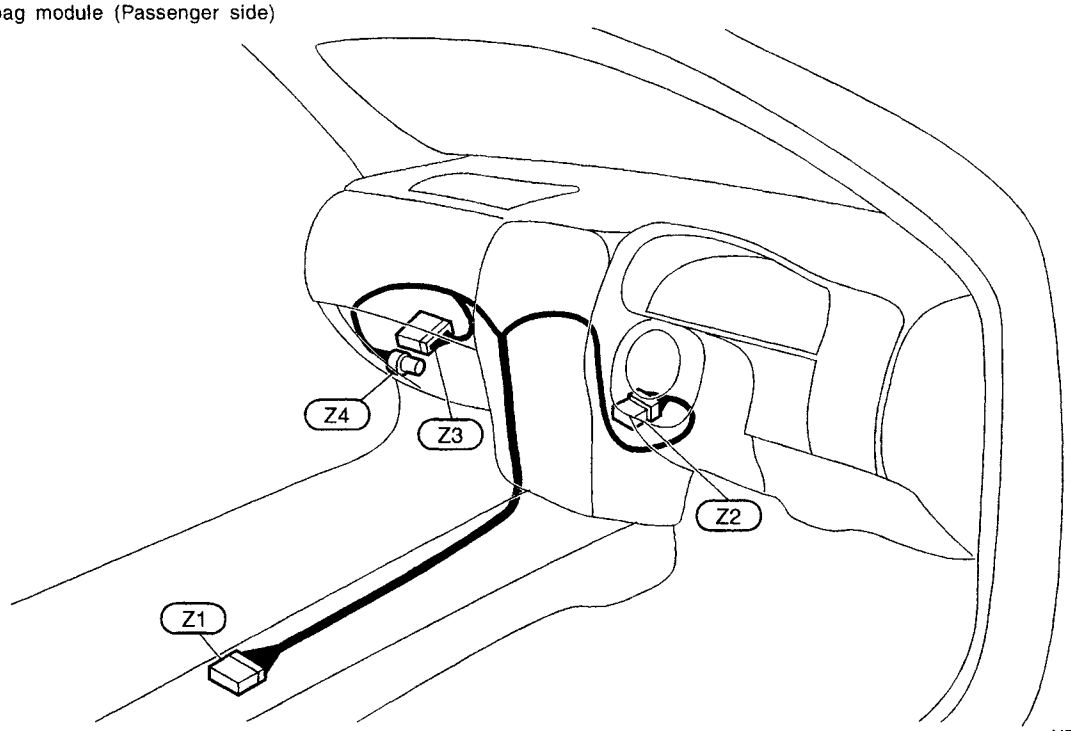

HEL181

EL

Simpo PDF Merge and Split Unregistered Version - http://www.simpopdf.com

Room Lamp Harness

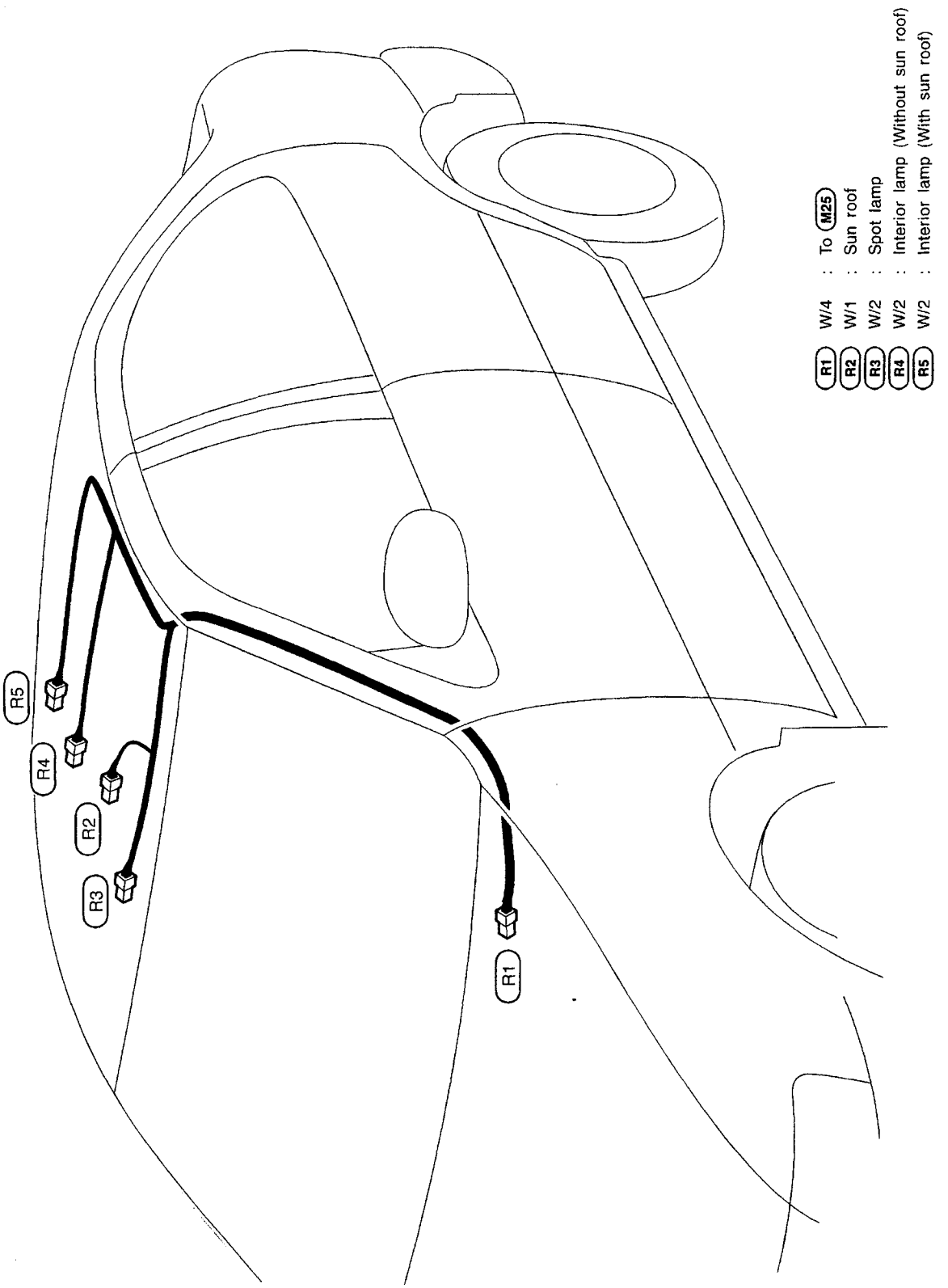

HEL182

Simpo PDF Merge and Split Unregistered Version - http://www.simpopdf.com

Back Door Harness

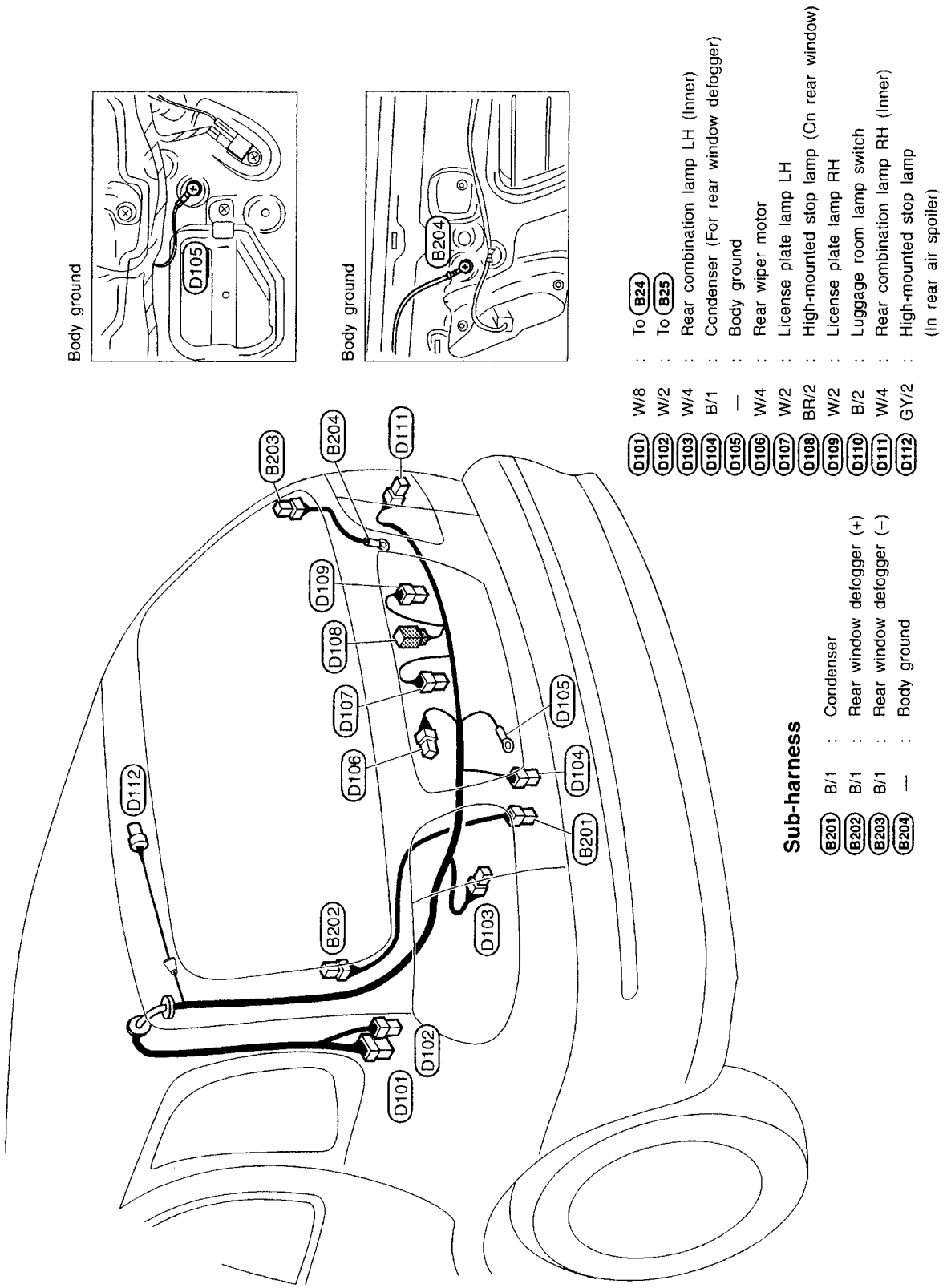

EL

HEL183

Simpo PDF Merge and Split Unregistered Version - http://www.simpopdf.com

Front Door Harness (LH side)

LHD MODELS (Standard type)

D1	SMJ	:	To M1	D6	W/12	:	Power window main switch (With front door power window)
D2	BR/2	:	Door speaker	D7	W/16	:	Power window main switch (With front and rear door power window)
D3	BR/3	:	Door mirror actuator	D8	GY/4	:	Door lock actuator (With power door lock type-1)
D4	GY/2	:	Door mirror defogger	D9	GY/2	:	Lock knob switch (With power door lock type-2)
D5	B/2	:	Power window regulator				

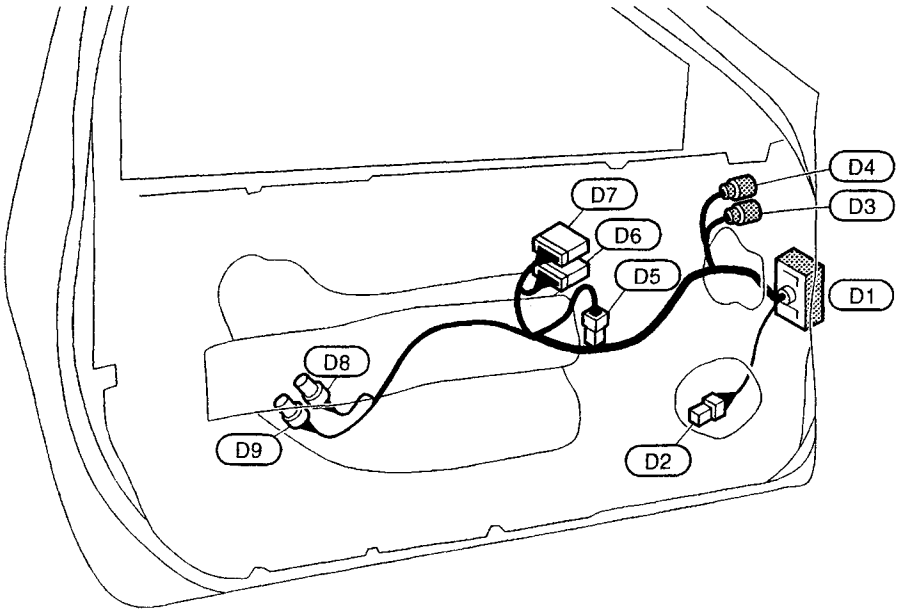

HEL184

LHD MODELS (FFC type)

D1	SMJ	:	To M1	D5	B/2	:	Power window regulator
D2	BR/2	:	Door speaker	D6	W/12	:	Power window main switch
D3	BR/3	:	Door mirror actuator	D8	GY/4	:	Door lock actuator (With power door lock type-1)
D4	GY/2	:	Door mirror defogger				

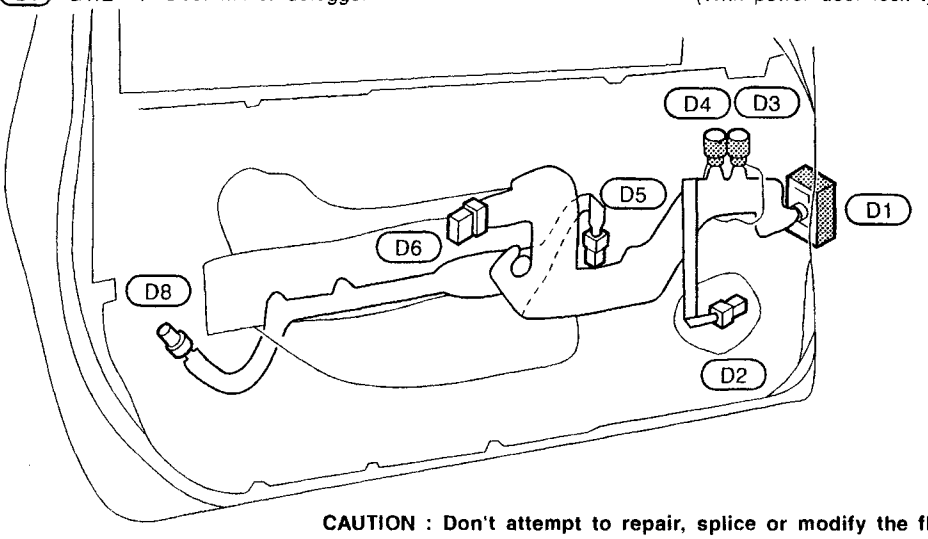

CAUTION : Don't attempt to repair, splice or modify the flexible flat circuit (FFC). If the FFC is damaged, replace with a new one.

HEL185

Simpo PDF Merge and Split Unregistered Version - http://www.simpopdf.com

Front Door Harness (LH side) (Cont'd)

RHD MODELS (Standard type)

(D31) SMJ : To (M75)
(D32) BR/2 : Door speaker
(D33) BR/3 : Door mirror actuator
(D35) B/2 : Power window regulator
(D36) W/8 : Power window sub-switch
(D38) GY/4 : Door lock actuator (With power door lock type-1)
(D40) W/4 : Door lock actuator (With power door lock type-2)

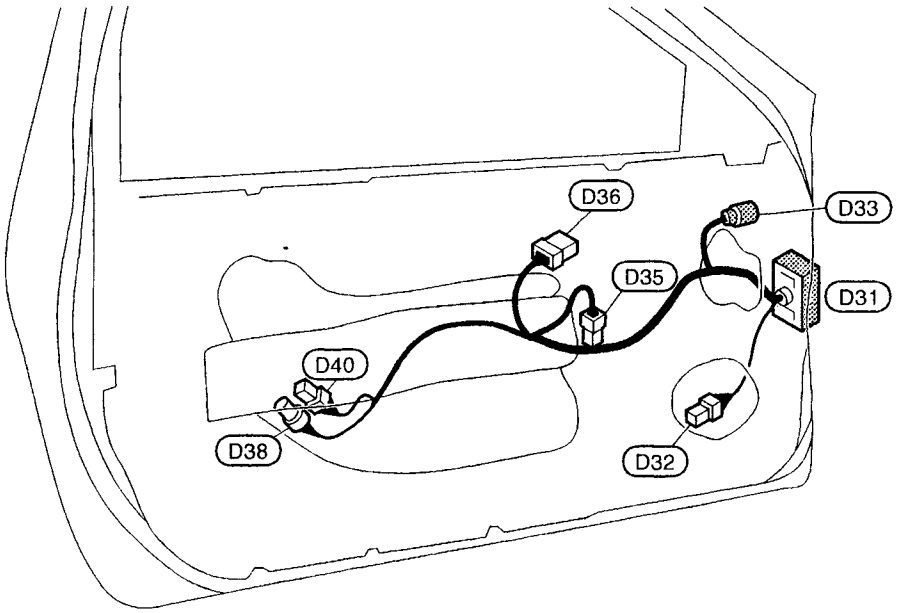

HEL186

RHD MODELS (FFC type)

(D31) SMJ : To (M75)
(D32) BR/2 : Door speaker
(D33) BR/3 : Door mirror actuator
(D34) GY/2 : Door mirror defogger
(D35) B/2 : Power window regulator
(D36) W/8 : Power window sub-switch
(D38) GY/4 : Door lock actuator (With power door lock type-1)

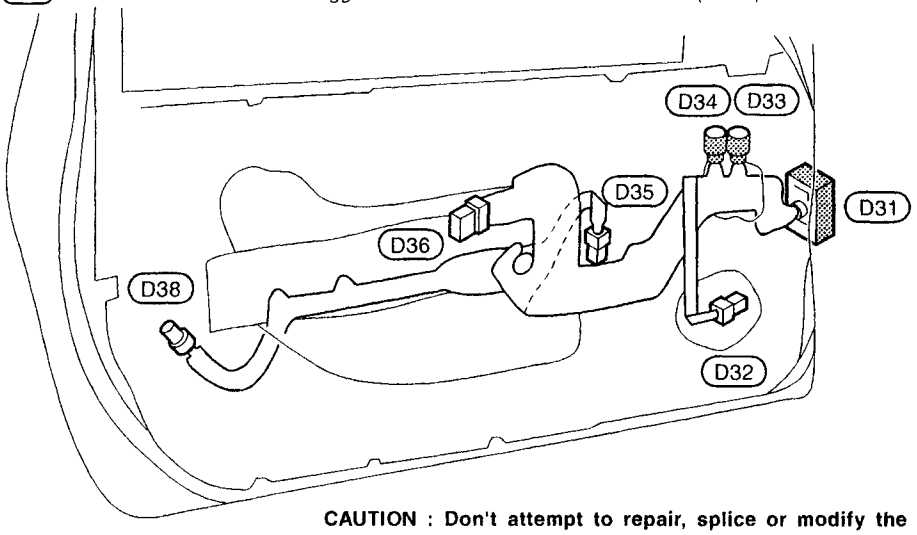

CAUTION : Don't attempt to repair, splice or modify the flexible flat circuit (FFC). If the FFC is damaged, replace with a new one.

HEL187

EL

Simpo PDF Merge and Split Unregistered Version - http://www.simpopdf.com

Front Door Harness (RH side)

LHD MODELS (Standard type)

(D31) SMJ : To (M75)
(D32) BR/2 : Door speaker
(D33) BR/3 : Door mirror actuator
(D34) GY/2 : Door mirror defogger
(D35) B/2 : Power window regulator
(D36) W/8 : Power window sub-switch
(D38) GY/4 : Door lock actuator (With power door lock type-1)
(D40) W/4 : Door lock actuator (With power door lock type-2)

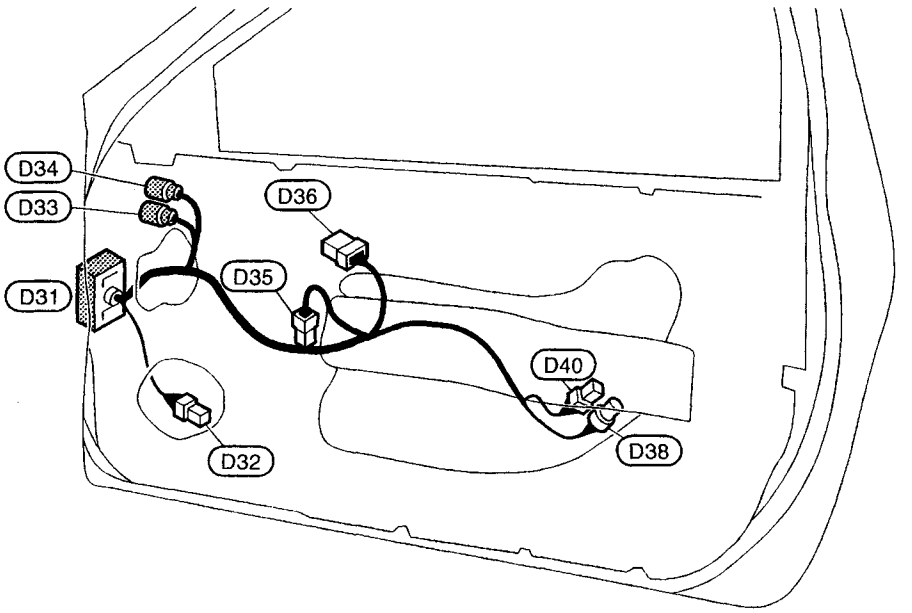

HEL188

LHD MODELS (FFC type)

(D31) SMJ : To (M75)
(D32) BR/2 : Door speaker
(D33) BR/3 : Door mirror actuator
(D34) GY/2 : Door mirror defogger
(D35) B/2 : Power window regulator
(D36) W/8 : Power window sub-switch
(D38) GY/4 : Door lock actuator (With power door lock type-1)

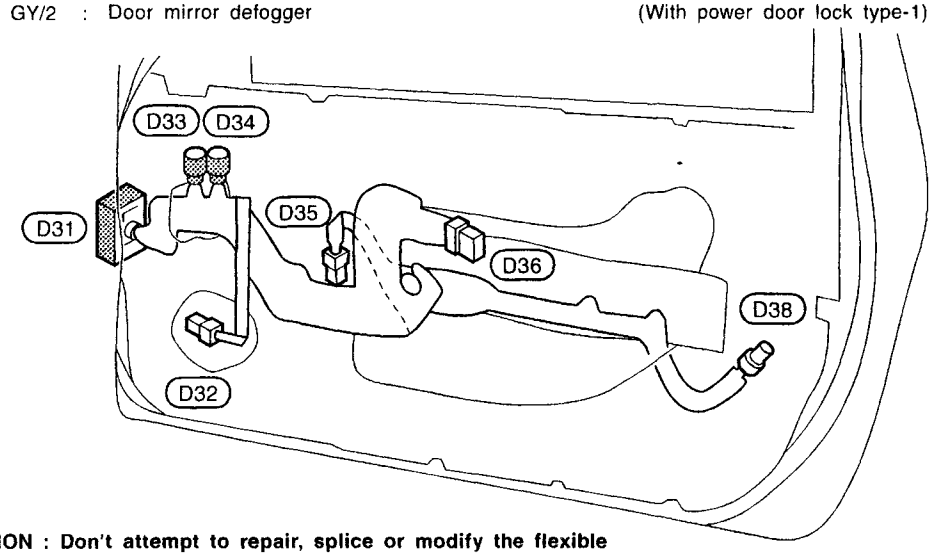

CAUTION : Don't attempt to repair, splice or modify the flexible flat circuit (FFC). If the FFC is damaged, replace with a new one.

HEL189

Simpo PDF Merge and Split Unregistered Version - http://www.simpopdf.com

Front Door Harness (RH side) (Cont'd)

RHD MODELS (Standard type)

(D1) SMJ : To (M1)
(D2) BR/2 : Door speaker
(D3) BR/3 : Door mirror actuator
(D5) B/2 : Power window regulator
(D6) W/12 : Power window main switch (With front door power window)
(D7) W/16 : Power window main switch (With front and rear door power window)
(D8) GY/4 : Door lock actuator (With power door lock type-1)
(D9) GY/2 : Lock knob switch (With power door lock type-2)

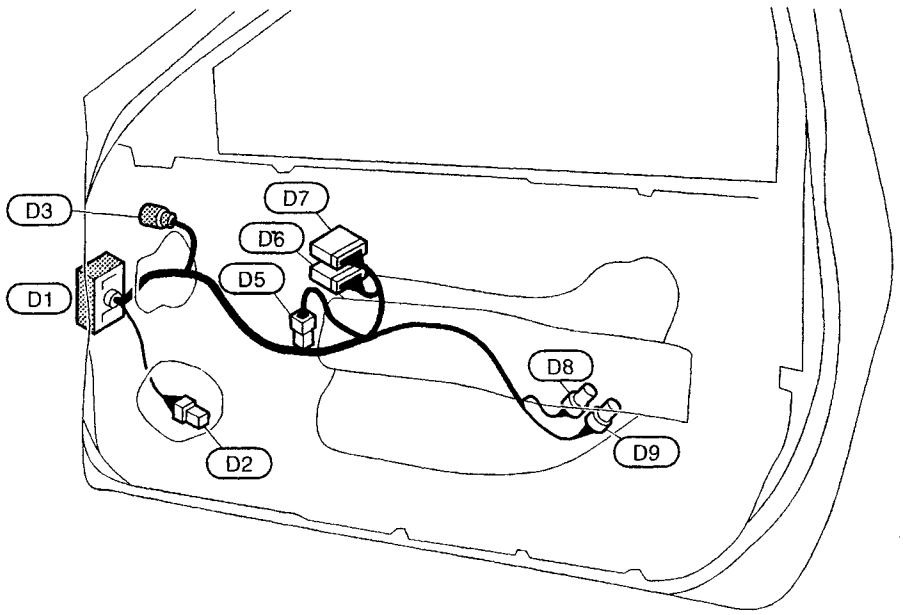

HEL190

RHD MODELS (FFC type)

(D1) SMJ : To (M1)
(D2) BR/2 : Door speaker
(D3) BR/3 : Door mirror actuator
(D4) GY/2 : Door mirror defogger
(D5) B/2 : Power window regulator
(D6) W/12 : Power window main switch
(D8) GY/4 : Door lock actuator (With power door lock type-1)

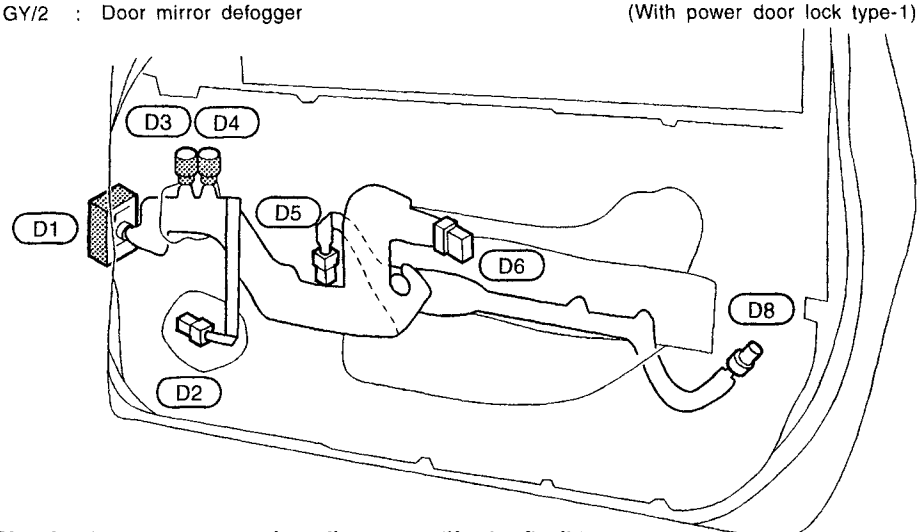

CAUTION : Don't attempt to repair, splice or modify the flexible flat circuit (FFC). If the FFC is damaged, replace with a new one.

HEL191

EL

Simpo PDF Merge and Split Unregistered Version - http://www.simpopdf.com

Rear Door Harness

LH SIDE

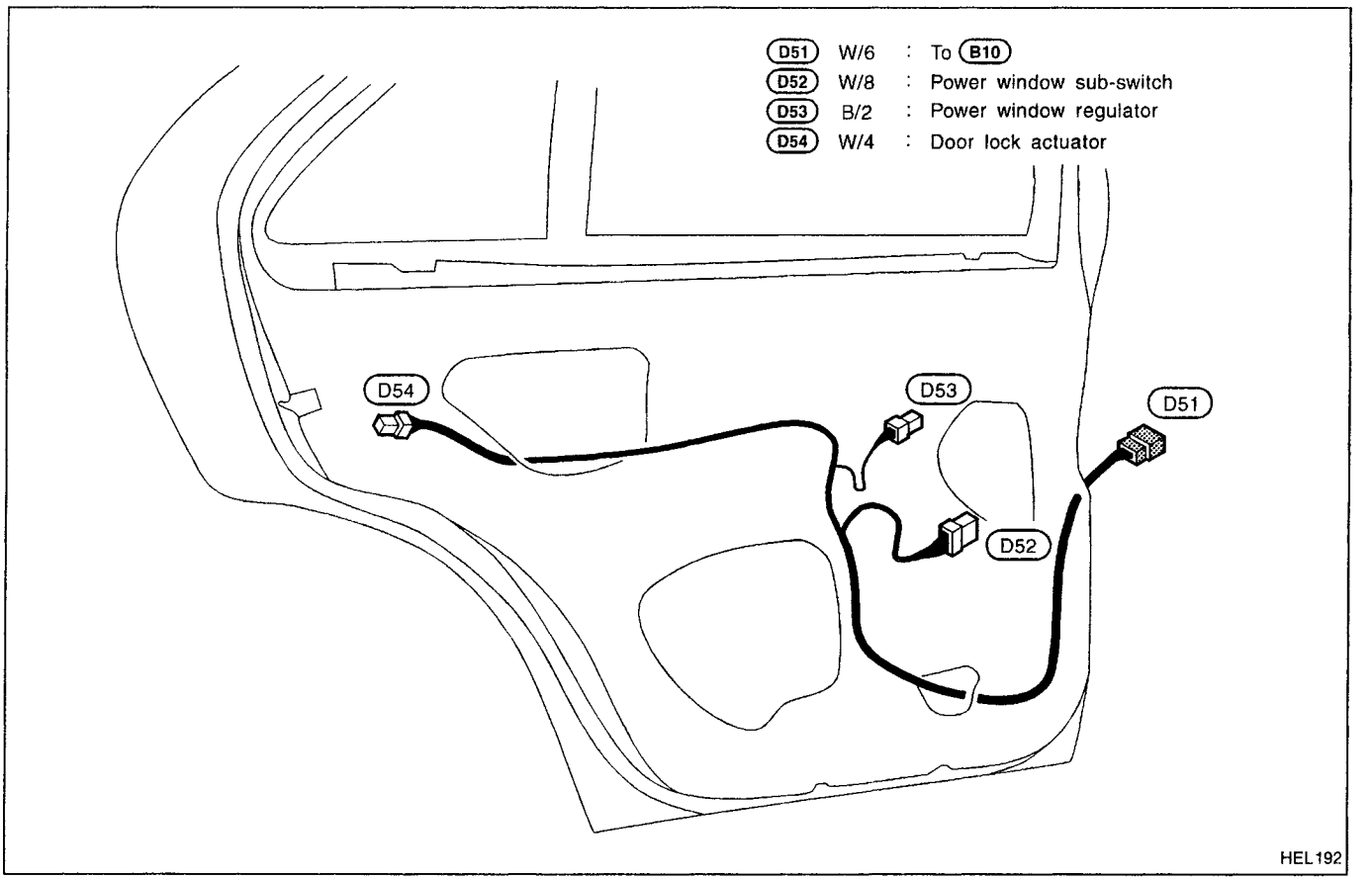

RH SIDE

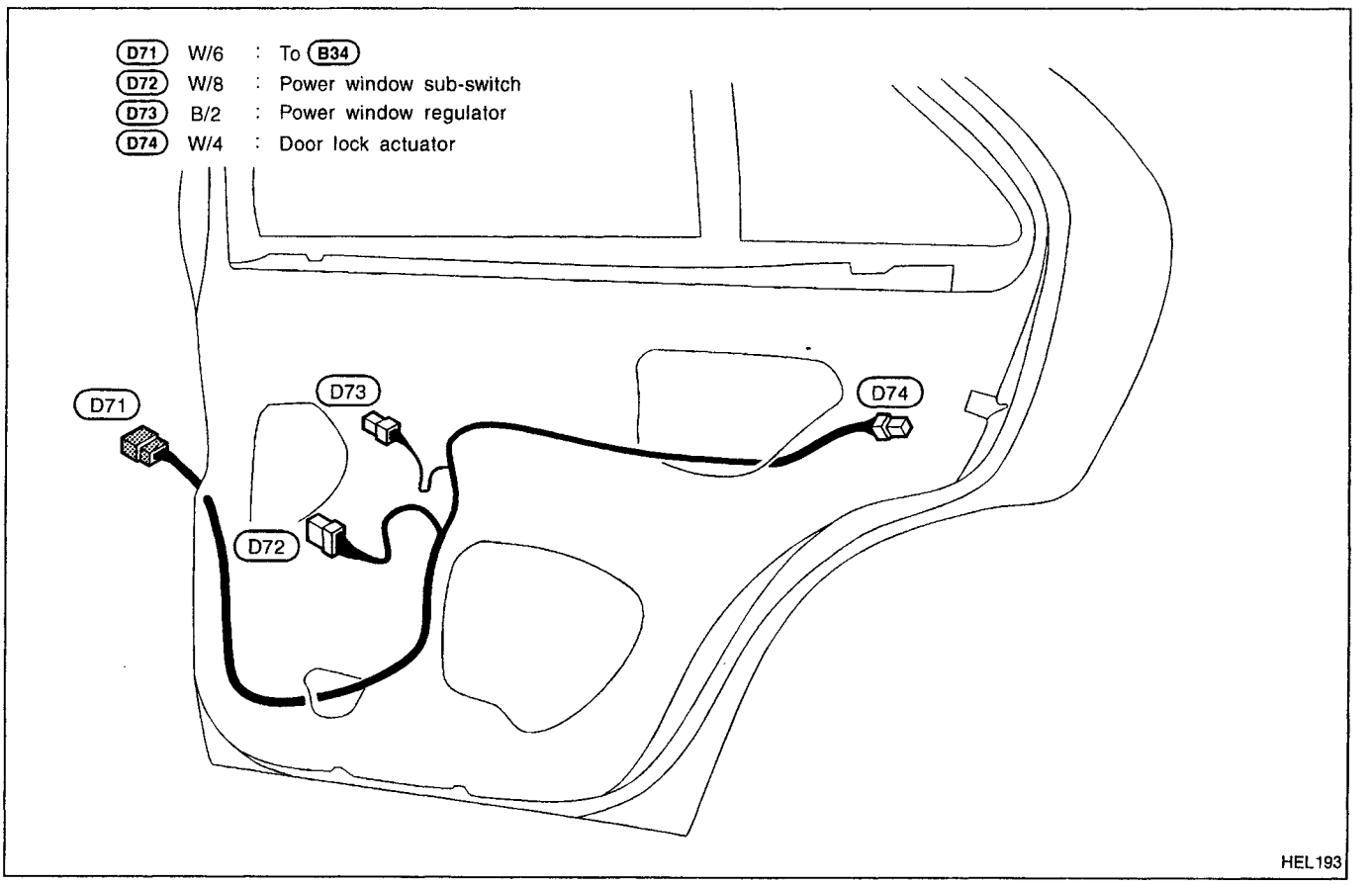

Simpo PDF Merge and Split Unregistered Version - http://www.simpopdf.com

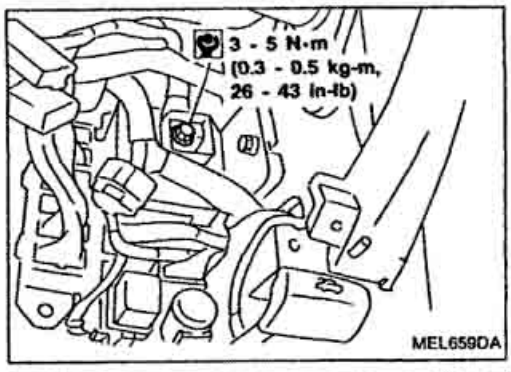

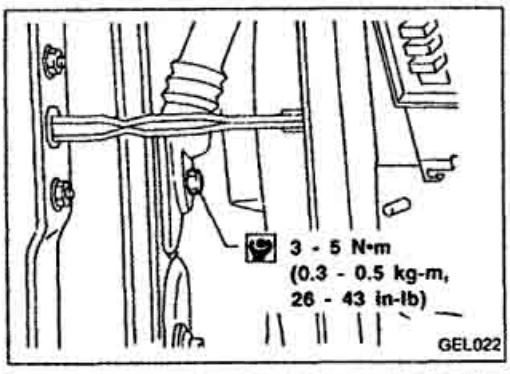

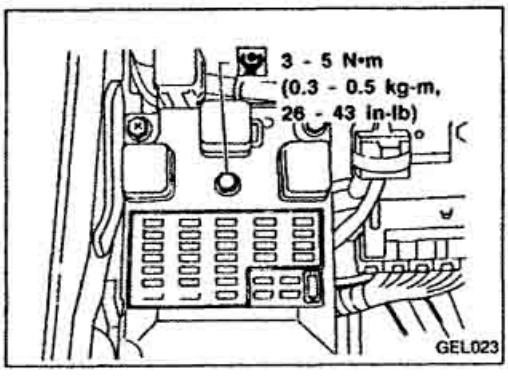

INSTALLATION

To install SMJ and FUSE BLOCK (J/B), tighten bolts until orange "fulltight" mark appears and then retighten to specified torque as required.

: 3 - 5 N·m
(0.3 - 0.5 kg-m, 26 - 43 in-lb)

CAUTION:

Do not overtighten bolts, otherwise, they may be damaged.

Simpo PDF Merge and Split Unregistered Version - http://www.simpopdf.com

Terminal Arrangement

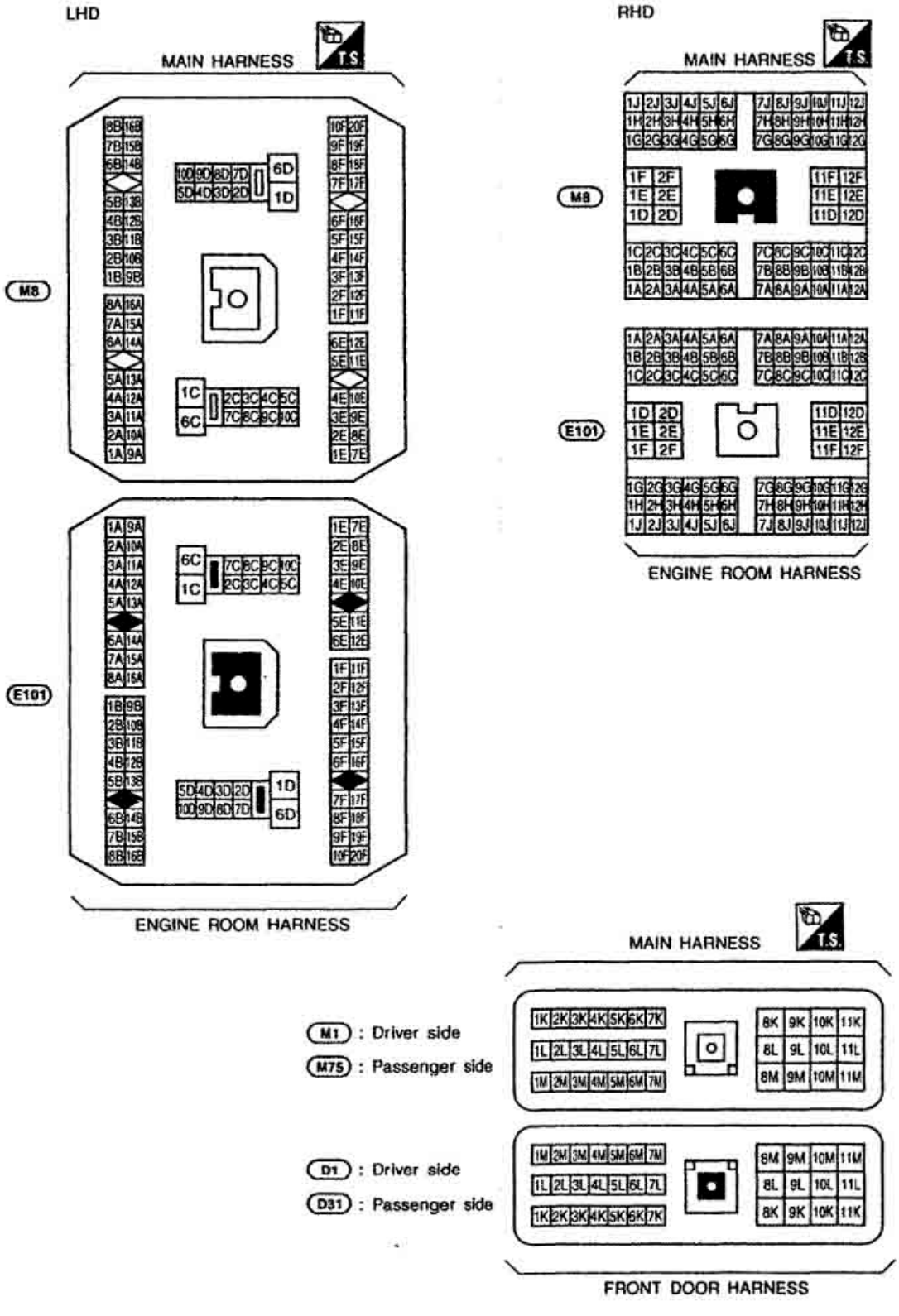

Simpo PDF Merge and Split Unregistered Version - http://www.simpopdf.com

Terminal Arrangement

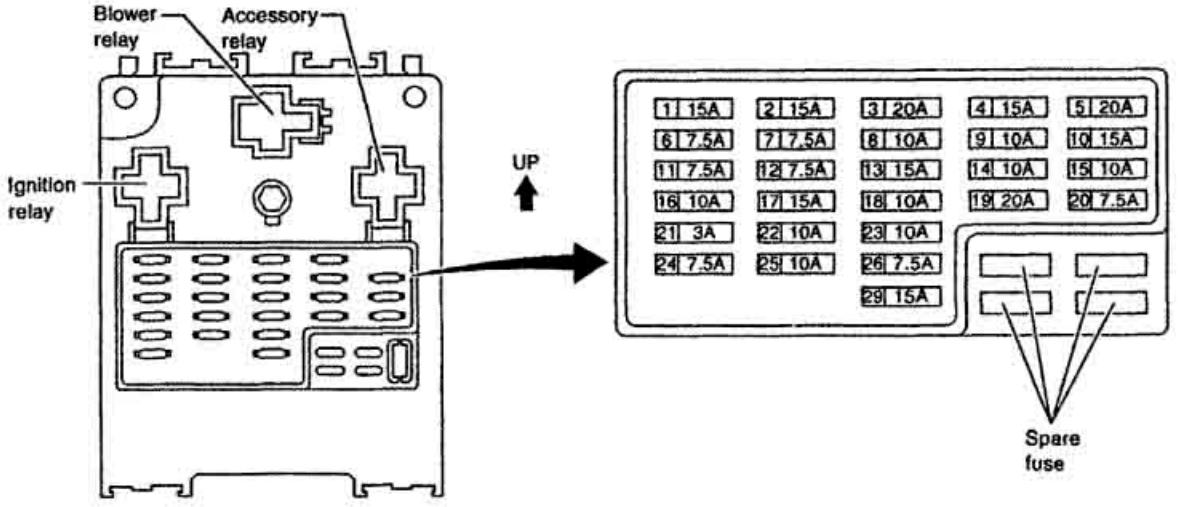

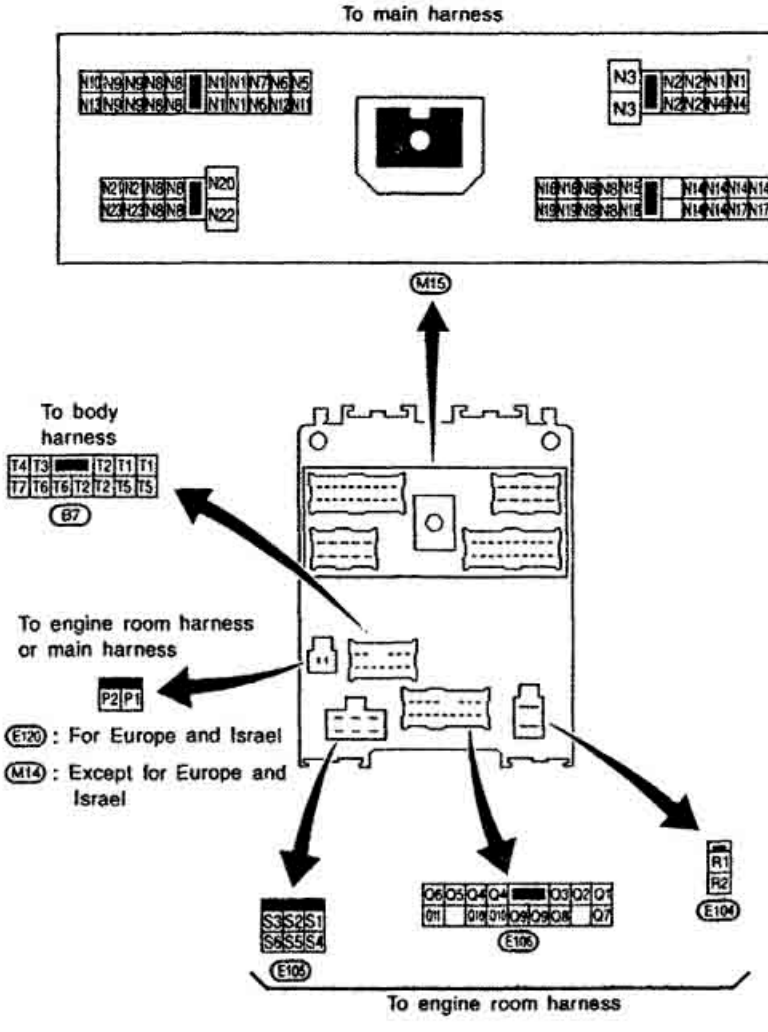

GEL025

Simpo PDF Merge and Split Unregistered Version - http://www.simpopdf.com

Terminal Arrangement

ECM (ECCS control module) (F1) (GA engine except for Australia and SR engine)



ECM (ECCS control module) (F1) (GA engine for Australia)

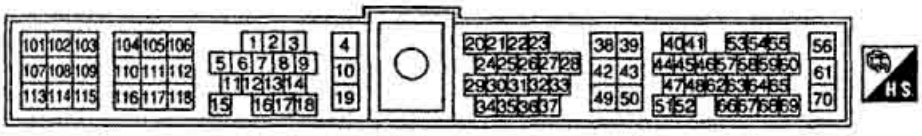

ECM (Engine control module) (M39) (CD engine)

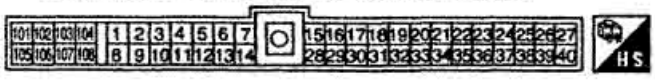

ABS CONTROL UNIT (B111) (LHD models)

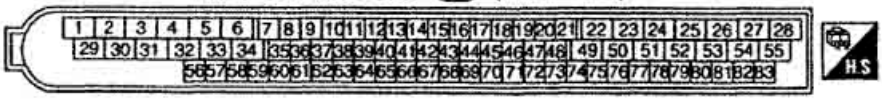

ABS CONTROL UNIT (B111) (RHD models)

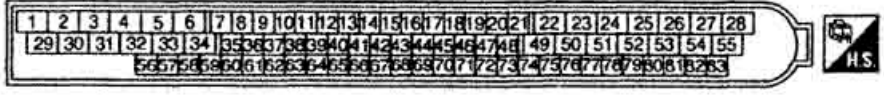

Simpo PDF Merge and Split Unregistered Version - http://www.simpopdf.com

Terminal Arrangement

ECM (ECCS control module) (F1) (GA engine except for Australia and SR engine)



ECM (ECCS control module) (F1) (GA engine for Australia)
(M39) (CD engine)

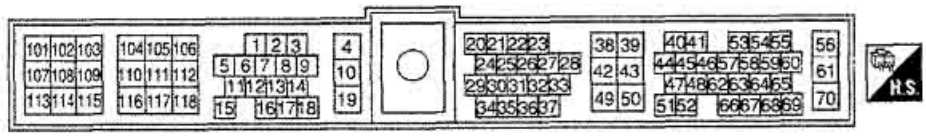

ABS CONTROL UNIT (B111) (LHD models)

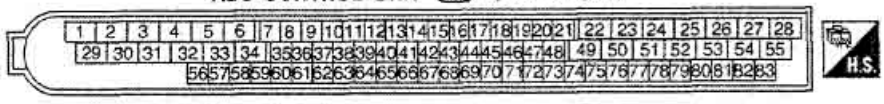

ABS CONTROL UNIT (B111) (RHD models)

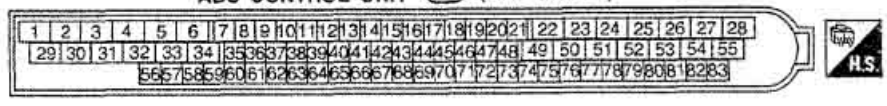

Simpo PDF Merge and Split Unregistered Version - http://www.simpopdf.com

Terminal Arrangement

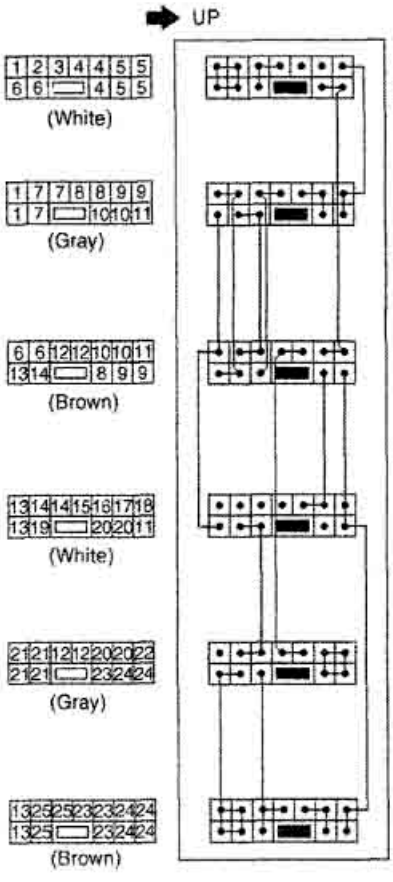

JUNCTION BOX No.2
(Joint connectors) (M19)

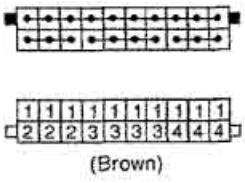

J/C-1 (M22)
J/C-3 (M58)
J/C-10 (M85)

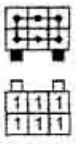

J/C-2 (M23)

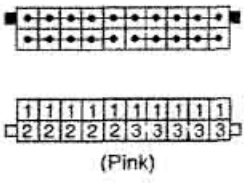

J/C-4 (M59)

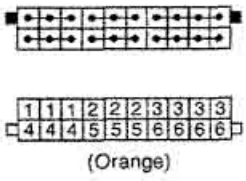

J/C-5 (M24)

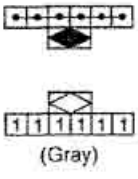

J/C-6 (F2)
J/C-7 (B109)

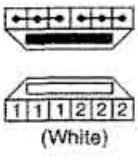

J/C-8 (M29)
J/C-9 (M80)

Simpo PDF Merge and Split Unregistered Version - http://www.simpopdf.com

ENGINE MECHANICAL

SECTION EM

CONTENTS

PRECAUTIONS 3
Parts Requiring Angular Tightening 3
Liquid Gasket Application Procedure 3
PREPARATION 4
Special Service Tools 4
Commercial Service Tools 8

GA

OUTER COMPONENT PARTS 9
COMPRESSION PRESSURE 15
Measurement of Compression Pressure 15
OIL PAN 16
Removal 16
Installation 17
TIMING CHAIN 18
Removal 20
Inspection 23
Installation 23
OIL SEAL REPLACEMENT 30
CYLINDER HEAD 32
Removal 34
Disassembly 34
Inspection 34
Assembly 40
Installation 40
VALVE CLEARANCE 41
Checking 41
Adjusting 41
ENGINE REMOVAL 44
Removal 45
Installation 46
CYLINDER BLOCK 47
Disassembly 48
Inspection 48
Assembly 55

SR

OUTER COMPONENT PARTS 59
COMPRESSION PRESSURE 62
Measurement of Compression Pressure 62
OIL PAN 63
Removal 63
Installation 66
TIMING CHAIN 68
Removal 69
Inspection 73
Installation 73
OIL SEAL REPLACEMENT 82
ACCEL-DRUM UNIT 84
CYLINDER HEAD 85
Removal 86
Disassembly 86
Inspection 88
Assembly 93
Installation 97
ENGINE REMOVAL 98
Removal 99
Installation 100
CYLINDER BLOCK 101
Disassembly 102
Inspection 102
Assembly 109

CD

OUTER COMPONENT PARTS 113
COMPRESSION PRESSURE 115
OIL PAN 118
Removal 118
Installation 118

Simpo PDF Merge and Split Unregistered Version - http://www.simpopdf.com

CONTENTS (Cont'd.)

TIMING BELT 120
Camshaft Timing Belt 120
Injection Pump Timing Belt 124
OIL SEAL REPLACEMENT 126
CYLINDER HEAD 128
Removal 129
Disassembly 129
Inspection 130
Assembly 136
Installation 137
ENGINE REMOVAL 140
CYLINDER BLOCK 143
Preparation 144
Disassembly 144
Inspection 145
Assembly 152

GA

SERVICE DATA AND SPECIFICATIONS (SDS) 155
General Specifications 155
Inspection and Adjustment 156

SR

SERVICE DATA AND SPECIFICATIONS (SDS) 163
General Specifications 163
Inspection and Adjustment 163

CD

SERVICE DATA AND SPECIFICATIONS (SDS) 171
Inspection and Adjustment 171

Simpo PDF Merge and Split Unregistered Version - http://www.simpopdf.com

Parts Requiring Angular Tightening

- Use an angle wrench for the final tightening of the following engine parts:

(1) Cylinder head bolts
(2) Main bearing cap bolts (SR engine only)
(3) Connecting rod cap nuts (SR and CD engine)

- Do not use a torque value for final tightening.
- The torque values for these parts are for a preliminary step.
- Ensure thread and seat surfaces are clean and coated with engine oil.

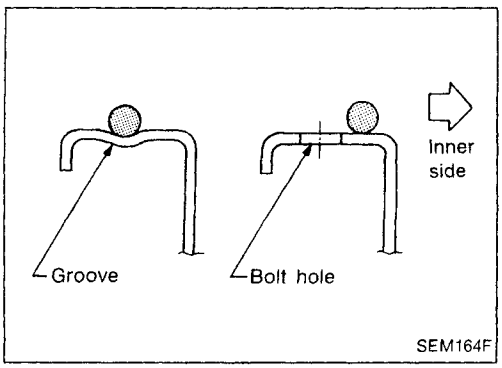

Liquid Gasket Application Procedure

a. Use a scraper to remove all traces of old liquid gasket from mating surfaces and grooves. Also, completely clean any oil from these areas.

b. Apply a continuous bead of liquid gasket to mating surfaces. (Use Genuine Liquid Gasket or equivalent.)

- **For oil pan, be sure liquid gasket diameter is 4.0 to 5.0 mm (0.157 to 0.197 in) for SR engine. Be sure liquid gasket diameter is 3.5 to 4.5 mm (0.138 to 0.177 in) for GA and CD engine.**
- **For areas except oil pan, be sure liquid gasket diameter is 2.0 to 3.0 mm (0.079 to 0.118 in).**

c. Apply liquid gasket to inner surface around hole perimeter area.

d. Assembly should be done within 5 minutes after coating.

e. Wait at least 30 minutes before refilling engine oil and engine coolant.

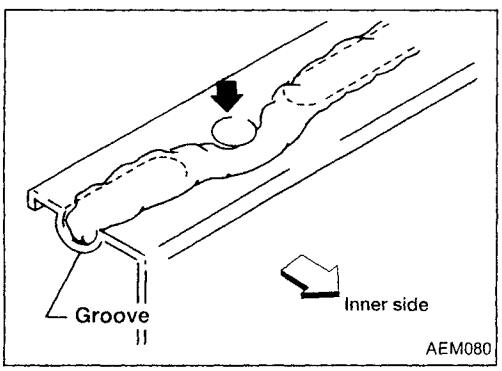

Simpo PDF Merge and Split Unregistered Version - http://www.simpopdf.com

Special Service Tools

Tool number Tool name	Description	Engine application		
		GA	SR	CD
ST0501S000 Engine stand assembly ① ST05011000 Engine stand ② ST05012000 Base	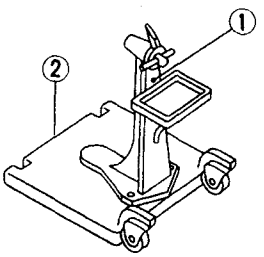 NT042 — When overhauling engine	X	X	X
KV10106500 Engine stand shaft	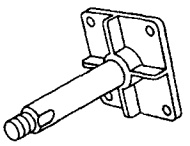 NT028 — When overhauling engine	—	X	—
KV10115300 Engine sub-attachment	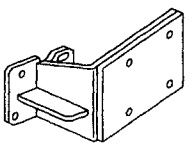 NT008 — When overhauling engine	—	X	—
Engine attachment assembly ① KV10106500 Engine attachment ② KV10113300 Sub-attachment	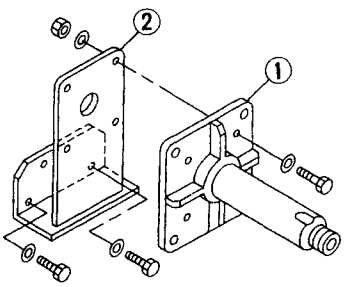 NT029 — When overhauling engine	X	—	—
① KV10108101 Engine attachment KV10106500 Engine stand shaft or ② KV10102500 Engine stand shaft	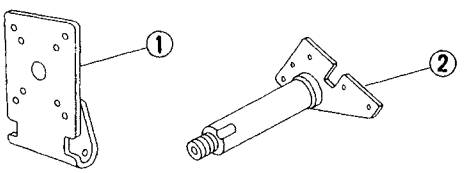 NT366 — When overhauling engine	—	—	X
ST10120000 Cylinder head bolt wrench	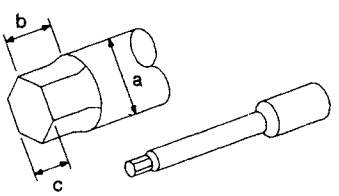 NT583 — Loosening and tightening cylinder head bolt **a: 13 (0.51) dia.** **b: 12 (0.47)** **c: 10 (0.39)** Unit: mm (in)	X	X	—

Simpo PDF Merge and Split Unregistered Version - http://www.simpopdf.com

Special Service Tools (Cont'd)

Tool number Tool name	Description		Engine application		
			GA	SR	CD
KV10116200 Valve spring compressor ① KV10115900 Attachment	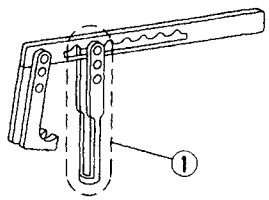 NT022	Disassembling and assembling valve mechanism	X	X	—
KV101092S0 Valve spring compressor ① KV10109210 Compressor ② KV10109220 Adapter	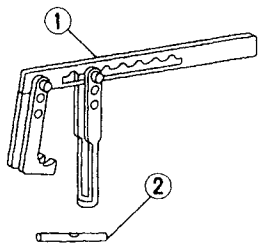 NT021	Disassembling and assembling valve mechanism	—	—	X
KV10115600 Valve oil seal drift	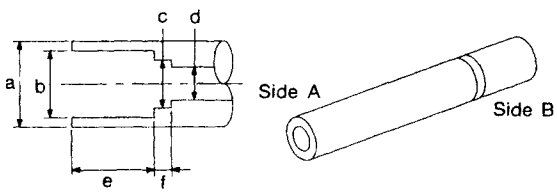 NT603	Installing valve oil seal **Side A / Side B** **a: 20 (0.79) / 20 (0.79)** **b: 13 (0.51) / 14.2 (0.559)** **c: 10.3 (0.406) / 11 (0.43)** **d: 8 (0.31) / 8 (0.31)** **e: 10.7 (0.421) / 10.7 (0.421)** **f: 5 (0.20) / 5 (0.20)** Unit: mm (in)	X (Side A)	X (Side A)	—
KV10107902 Valve oil seal puller ① KV10116100 Valve oil seal puller adapter	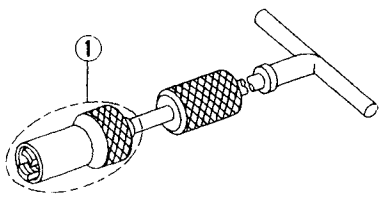 NT605	Removing valve oil seal	X	X	X
KV10115700 Dial gauge stand	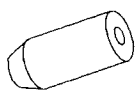 NT012	Adjusting shims	X	—	—
KV101151S0 Lifter stopper set ① KV10115110 Camshaft pliers ② KV10115120 Lifter stopper	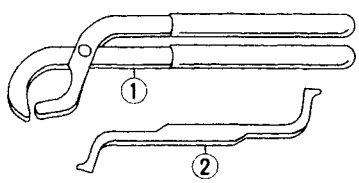 NT041	Changing shims	X	—	—

EM

Simpo PDF Merge and Split Unregistered Version - http://www.simpopdf.com

Special Service Tools (Cont'd)

Tool number Tool name	Description		Engine application		
			GA	SR	CD
EM03470000 Piston ring compressor	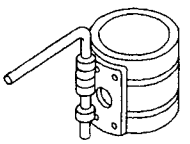 NT044	Installing piston assembly into cylinder bore	X	X	X
KV10107400 Piston pin press stand ① KV10107310 Center shaft ② ST13040020 Stand ③ ST13040030 Spring ④ KV10107320 Cap ⑤ ST13040050 Drift	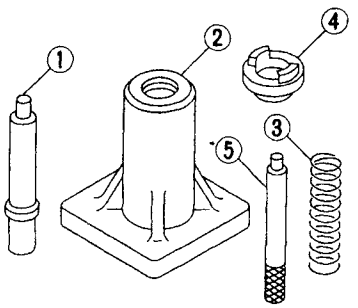 NT013	Disassembling and assembling piston pin	X	X	—
KV10109300* Pulley holder	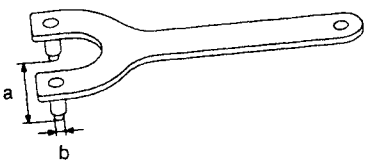 NT628	Removing and installing camshaft sprocket **a: 68 mm (2.68 in)** **b: 8 mm (0.31 in) dia.**	—	—	X
ED19600000* Compression gauge set	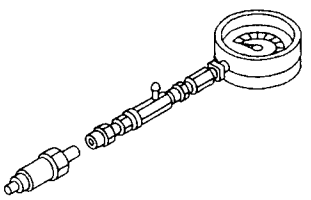 NT626	Measuring compression pressure	—	—	X
KV11100300* Nozzle holder socket	 NT563	Loosening and tightening injector nozzle	—	—	X
KV10111100 Seal cutter	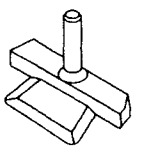 NT046	Removing oil pan	X	X	X
WS39930000 Tube presser	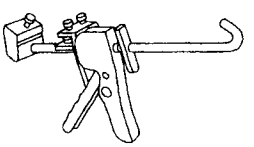 NT052	Pressing the tube of liquid gasket	X	X	X

*: Special tool or commercial equivalent

Simpo PDF Merge and Split Unregistered Version - http://www.simpopdf.com

Special Service Tools (Cont'd)

Tool number Tool name	Description	Engine application		
		GA	SR	CD
KV10112100 Angle wrench	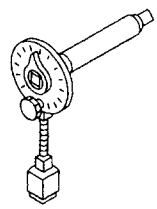 NT014 Tightening bolts for bearing cap, cylinder head, etc.	X	X	X
ST16610001* Pilot bushing puller	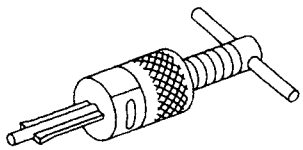 NT045 Removing pilot bushing	—	X	X
KV11102900* Pulley puller	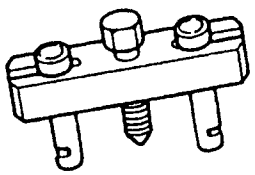 NT647 Removing injection pump pulley	—	—	X
KV101056S0* Ring gear stopper ① KV10105630 Adapter ② KV10105610 Plate assembly	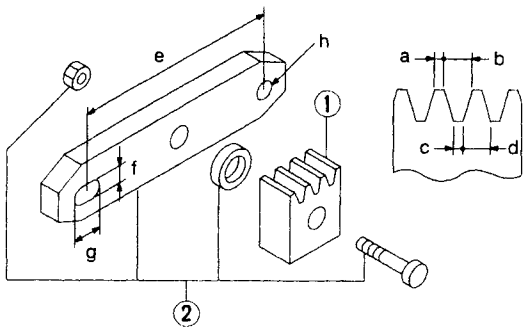 NT617 Preventing crankshaft from rotating **a: 3 (0.12)** **b: 6.4 (0.252)** **c: 2.8 (0.110)** **d: 6.6 (0.260)** **e: 107 (4.21)** **f: 14 (0.55)** **g: 20 (0.79)** **h: 14 (0.55) dia.** Unit: mm (in)	—	—	X

*: Special tool or commercial equivalent

EM

Simpo PDF Merge and Split Unregistered Version - http://www.simpopdf.com

Commercial Service Tools

Tool name	Description		Engine application		
			GA	SR	CD
Spark plug wrench	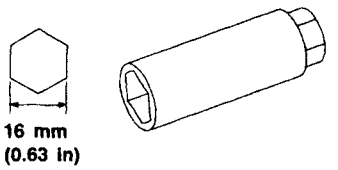 NT047	Removing and installing spark plug	X	X	—
Valve seat cutter set	 NT048	Finishing valve seat dimensions	X	X	X
Piston ring expander	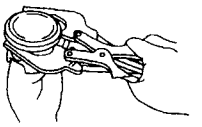 NT030	Removing and installing piston ring	X	X	X
Valve guide drift	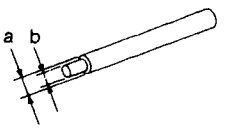 NT015	Removing and installing valve guide **SR Intake & Exhaust** **a = 9.5 mm (0.374 in) dia.** **b = 5.0 mm (0.197 in) dia.** **GA Intake & Exhaust** **a = 9.5 mm (0.374 in) dia.** **b = 5.5 mm (0.217 in) dia.**	X	X	—
Valve guide reamer	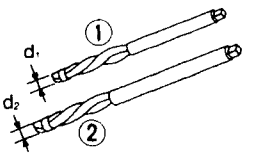 NT016	Reaming valve guide ① or hole for oversize valve guide ② **SR Intake & Exhaust** **d_1 = 6.0 mm (0.236 in) dia.** **d_2 = 10.175 mm (0.4006 in) dia.** **GA Intake & Exhaust** **d_1 = 5.5 mm (0.217 in) dia.** **d_2 = 9.685 mm (0.3813 in) dia.**	X	X	—
Front oil seal drift	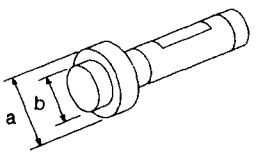 NT049	Installing front oil seal **a = 75 mm (2.95 in) dia.** **b = 45 mm (1.77 in) dia.**	X	X	—
Rear oil seal drift	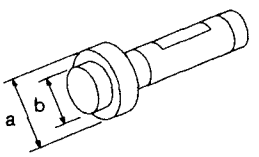 NT049	Installing rear oil seal **a = 110 mm (4.33 in) dia.** **b = 80 mm (3.15 in) dia.**	X	X	—

Simpo PDF Merge and Split Unregistered Version - http://www.simpopdf.com

GA16DE WITHOUT VTC, 14DE AND 15DE

SEC. 140•150•210•211•220•221•253

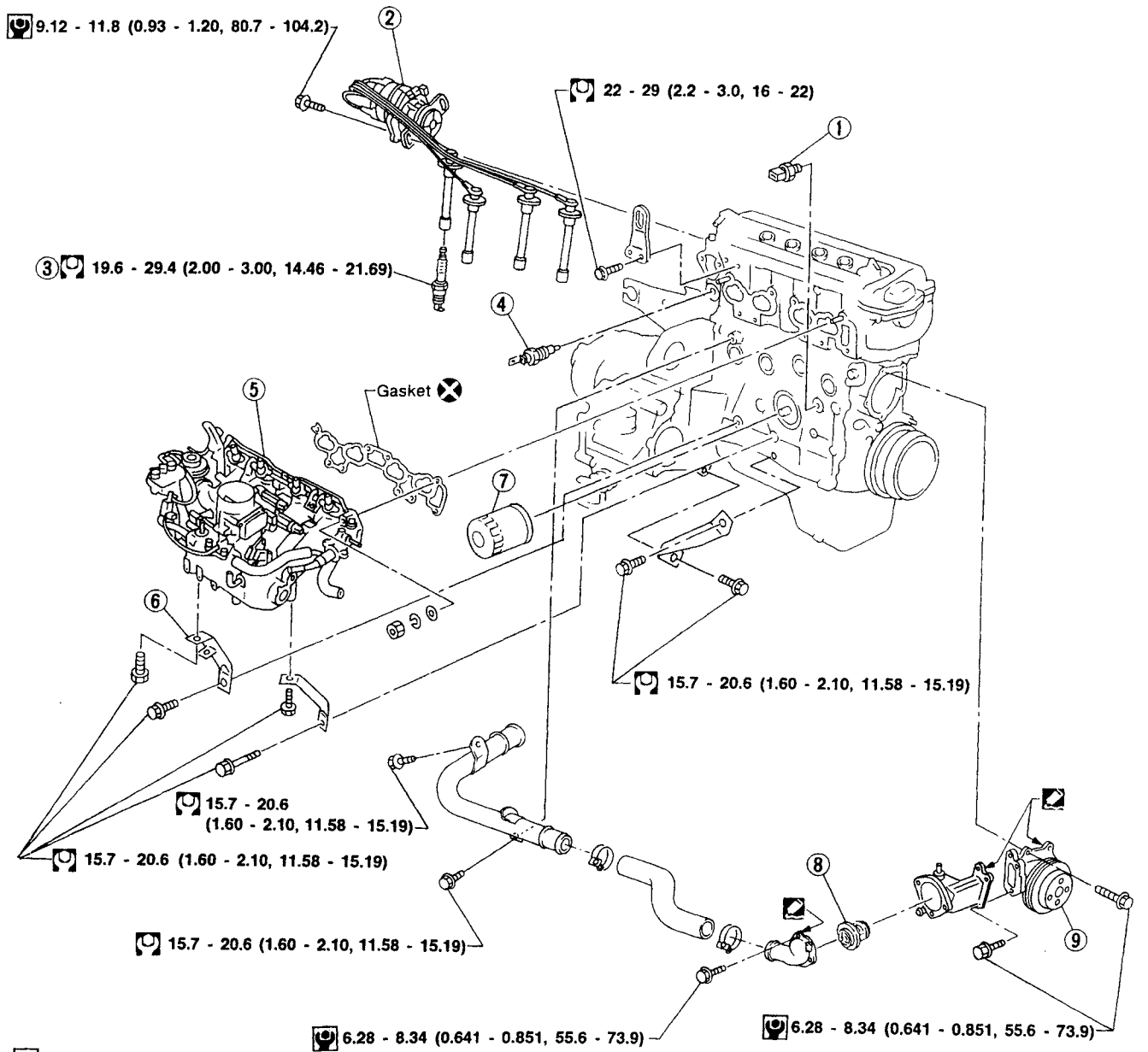

SEM060FA

①	Oil pressure switch	④	Thermal transmitter	⑦	Oil filter
②	Distributor	⑤	Intake manifold	⑧	Thermostat
③	Spark plug	⑥	Intake manifold supports	⑨	Water pump

Simpo PDF Merge and Split Unregistered Version - http://www.simpopdf.com

GA16DE WITHOUT VTC, 14DE AND 15DE

SEC. 140•147•163•164

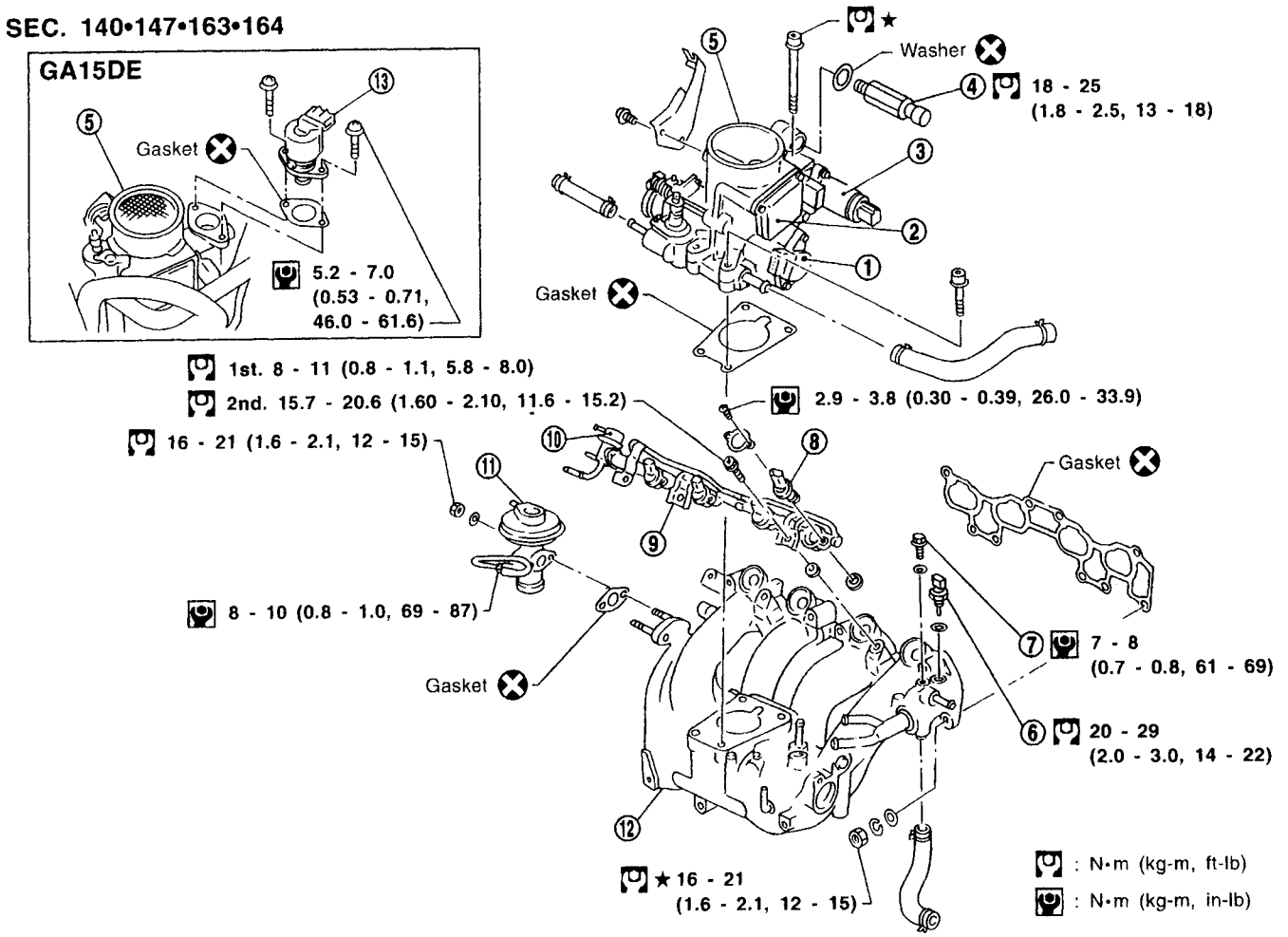

★ **Intake manifold bolts and nuts tightening order**

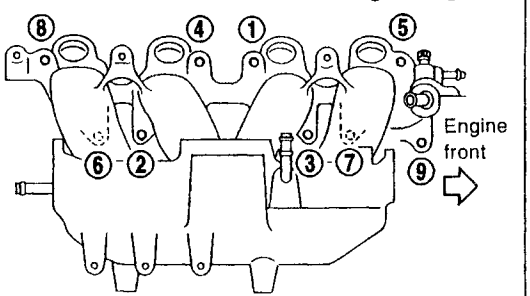

Tighten in numerical order.

★ **Throttle body bolts tightening procedure**

1) Tighten all bolts to 9 to 11 N•m (0.9 to 1.1 kg-m, 6.5 to 8.0 ft-lb)
2) Tighten all bolts to 18 to 22 N•m (1.8 to 2.2 kg-m, 13 to 16 ft-lb)

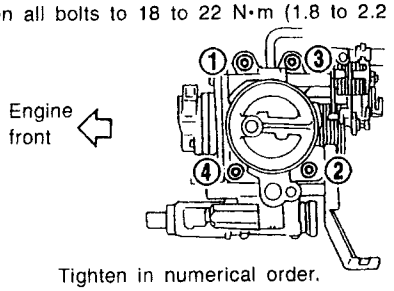

Tighten in numerical order.

SEM220F

① Throttle position sensor
② Mass air flow sensor
③ IACV-AAC valve
④ IACV-FICD solenoid valve
⑤ Throttle body
⑥ Engine coolant temperature sensor
⑦ Air relief plug
⑧ Injector
⑨ Injector tube
⑩ Pressure regulator
⑪ EGR valve (GA15DE M/T model only)
⑫ Intake manifold
⑬ IACV-AAC valve (GA15DE engine models only)

Simpo PDF Merge and Split Unregistered Version - http://www.simpopdf.com

GA16DE WITH VTC

SEC. 130•140•150•210•211•221•226•253

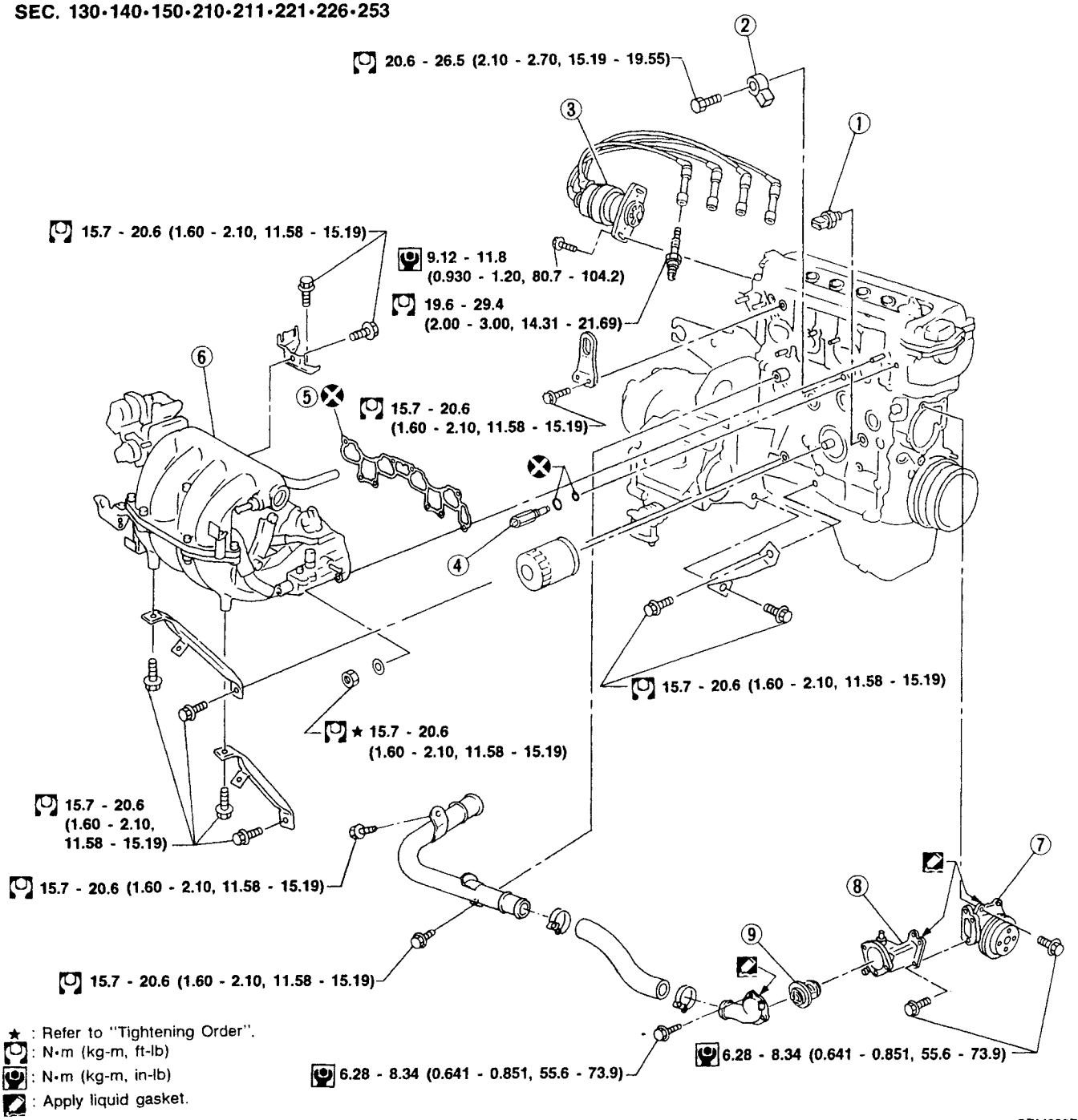

① Oil pressure switch
② Knock sensor
③ Distributor
④ VTC solenoid valve
⑤ Intake manifold gasket
⑥ Intake manifold assembly
⑦ Water pump
⑧ Thermostat housing
⑨ Thermostat

Simpo PDF Merge and Split Unregistered Version - http://www.simpopdf.com

GA16DE WITH VTC

SEC. 140•163•164

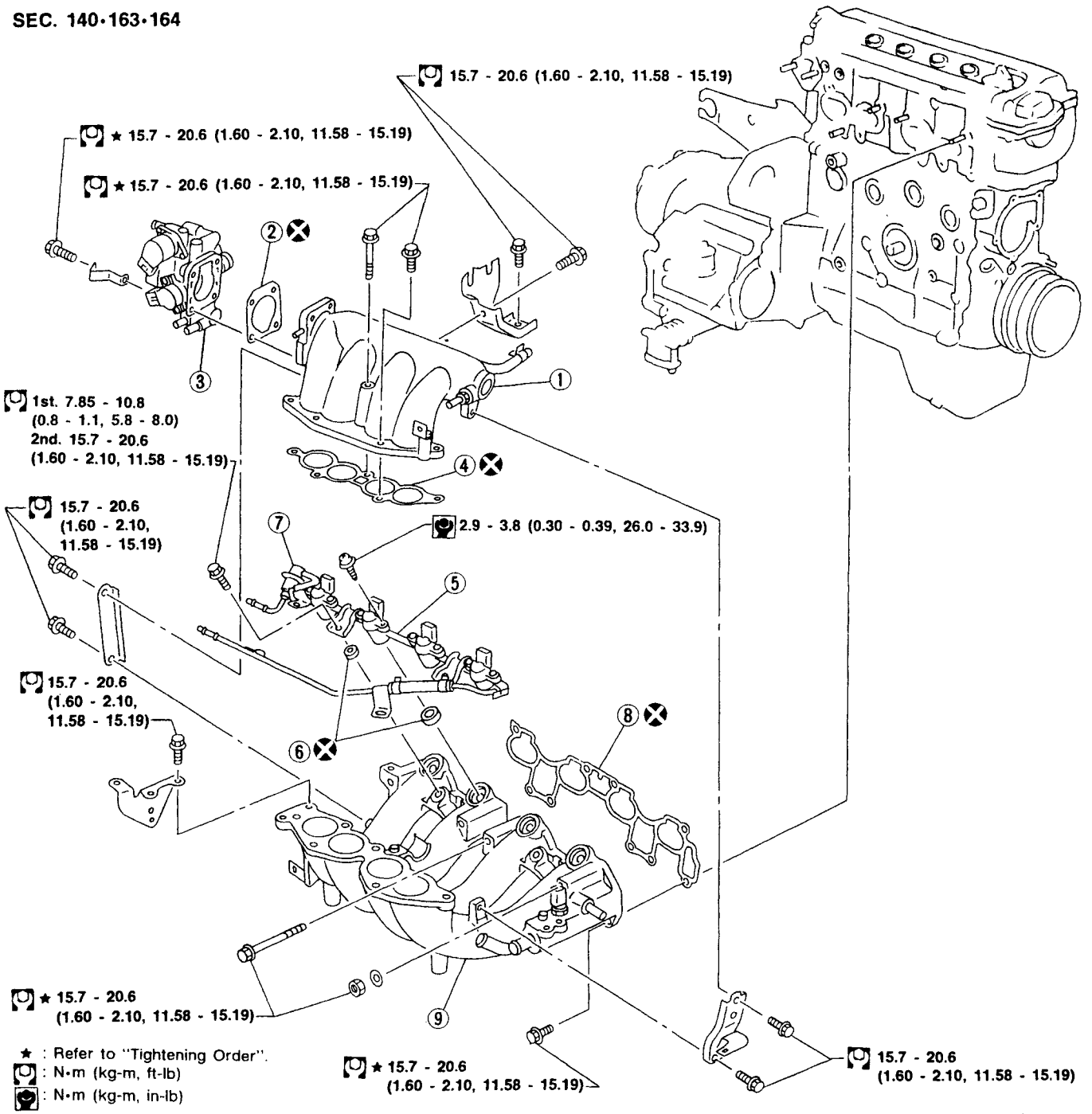

★ : Refer to "Tightening Order".
: N•m (kg-m, ft-lb)
: N•m (kg-m, in-lb)

SEM064FB

① Intake manifold collector
② Gasket
③ Throttle body
④ Collector gasket
⑤ Fuel gallery assembly
⑥ Insulator
⑦ Pressure regulator
⑧ Intake manifold gasket
⑨ Intake manifold

Simpo PDF Merge and Split Unregistered Version - http://www.simpopdf.com

Tightening order

***Intake manifold collector bolts tightening order**

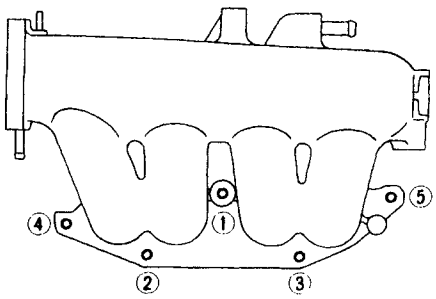

Tighten in numerical order.

***Intake manifold bolts and nuts tightening order**

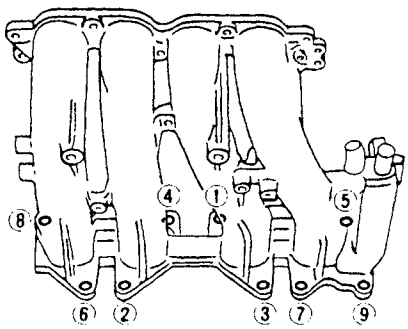

Tighten in numerical order.

***Throttle body bolts tightening procedure**

1) **Tighten all bolts to 8.8 to 10.8 N·m (0.90 to 1.10 kg-m, 6.5 to 8.0 ft-lb)**
2) **Tighten all bolts to 17.7 to 21.6 N·m (1.81 to 2.20 kg-m, 13.06 to 15.93 ft-lb)**

● Make sure the direction of the gasket is as shown in figure.

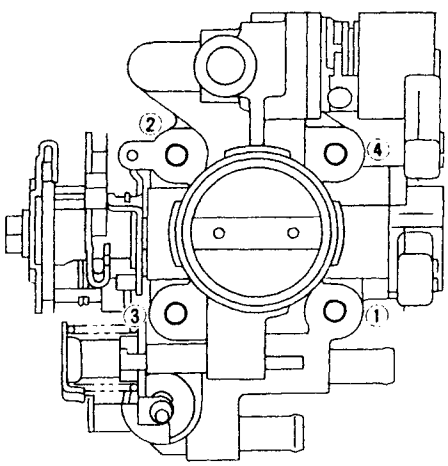

Tighten in numerical order.

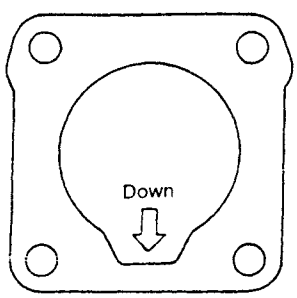

Gasket

SEM066FB

Simpo PDF Merge and Split Unregistered Version - http://www.simpopdf.com

SEC. 120•140•147•210

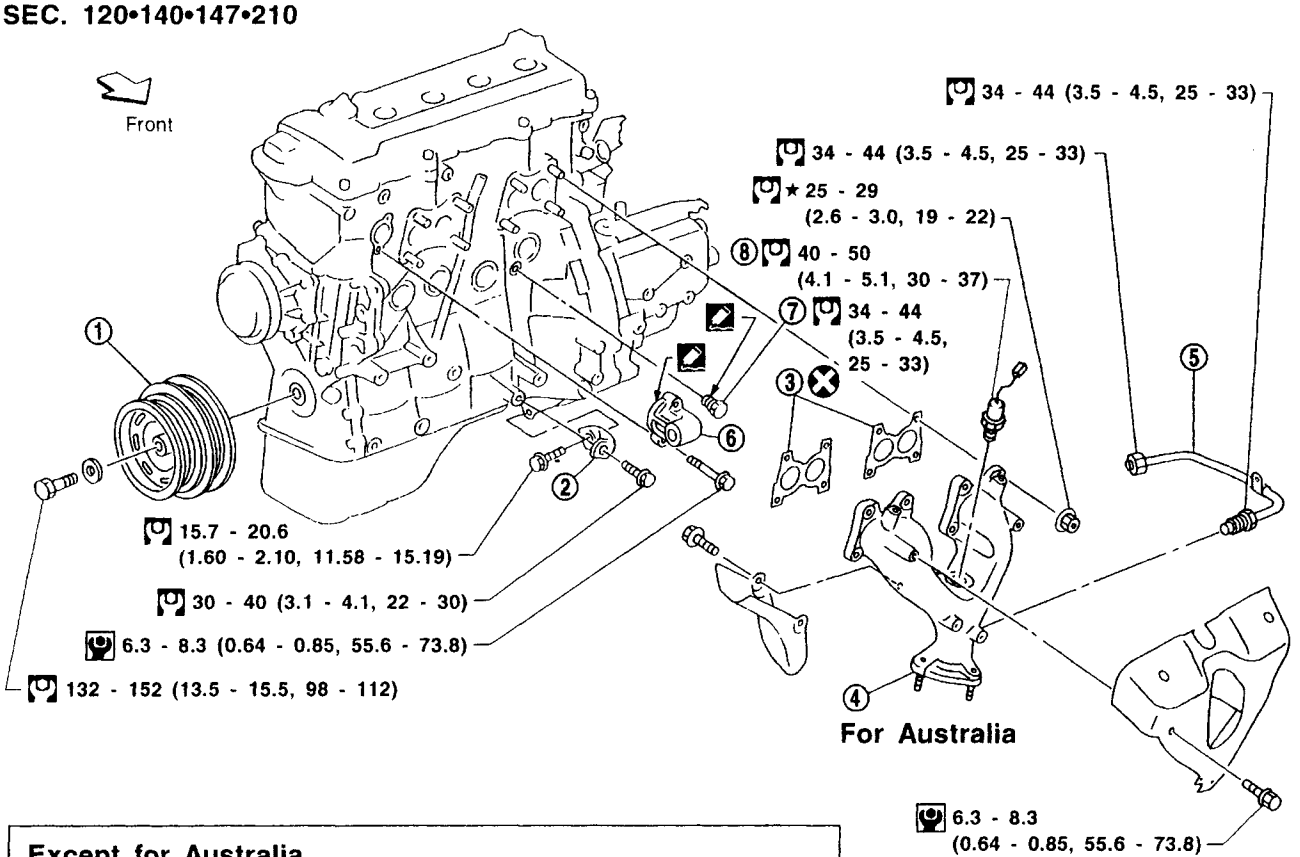

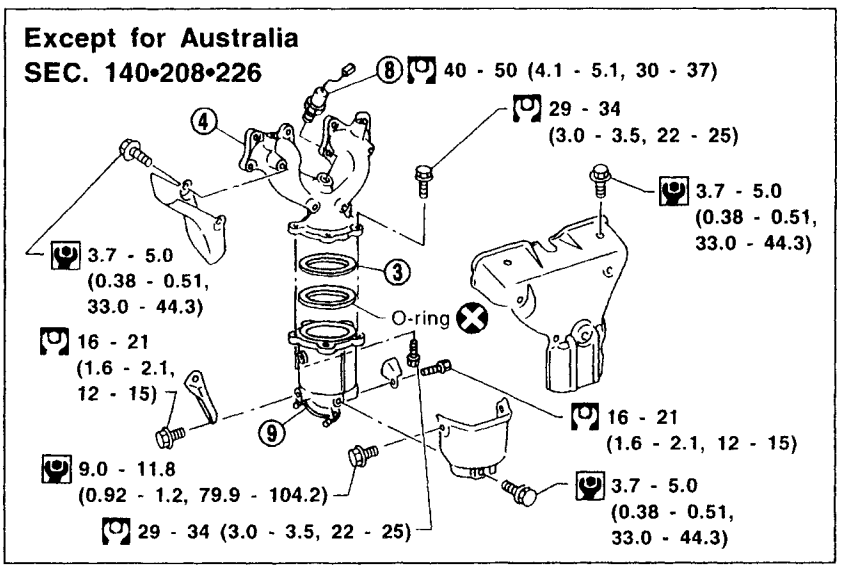

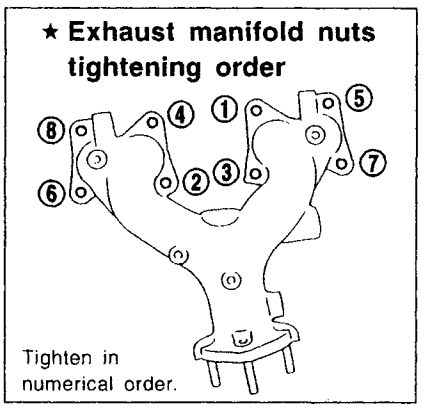

: N•m (kg-m, ft-lb)
: N•m (kg-m, in-lb)
: Apply liquid gasket.

SEM242F

① Crankshaft pulley
② Gusset
③ Gasket
④ Exhaust manifold
⑤ EGR tube
⑥ Water outlet
⑦ Water drain plug
⑧ ● Heated oxygen sensor (Australia A/T models and Europe models)
● Oxygen sensor (Except Australia A/T models and Europe models)
⑨ Three-way catalyst

Simpo PDF Merge and Split Unregistered Version - http://www.simpopdf.com

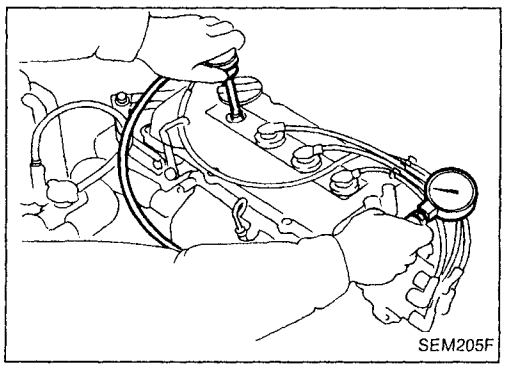
SEM205F


20 mm (0.79 in) dia.

Use compressor tester whose end (rubber portion) is less than 20 mm (0.79 in) dia. Otherwise, it may be caught by cylinder head during removal.

SEM387C

Measurement of Compression Pressure

1. Warm up engine.
2. Turn ignition switch off.
3. Cut fuel line.
   Release fuel pressure.
   Refer to "Releasing Fuel Pressure" in EC section.
4. Remove all spark plugs.
5. Disconnect distributor center cable.
6. Attach a compression tester to No. 1 cylinder.
7. Depress accelerator pedal fully to keep throttle valve wide open.
8. Crank engine and record highest gauge indication.
9. Repeat the measurement on each cylinder as shown above.

- **Always use a fully-charged battery to obtain specified engine revolution.**

Compression pressure:

Unit: kPa (bar, kg/cm^2, psi)/rpm

Compression ratio Refer to SDS (EM-155).	Standard	Minimum	Difference limit between cylinders
9.5	1,324 (13.24, 13.5, 192)/350	1,128 (11.28, 11.5, 164)/350	98 (0.98, 1.0, 14)/350
9.8	1,353 (13.53, 13.8, 196)/350	1,157 (11.57, 11.8, 168)/350	
9.9	1,373 (13.7, 14, 199)/350	1,177 (11.8, 12, 171)/350	

10. If compression in one or more cylinders is low:

a. Pour a small amount of engine oil into cylinders through spark plug holes.
b. Re-test compression.

- **If adding oil helps compression, piston rings may be worn or damaged. If so, replace piston rings after checking piston.**
- **If pressure stays low, a valve may be sticking or seating improperly. Inspect and repair valve and valve seat. Refer to SDS (EM-156, 159). If valve or valve seat is damaged excessively, replace them.**
- **If compression stays low in two cylinder that are next to each other:**
  The cylinder head gasket may be leaking, or both cylinders may have valve component damage. Inspect and repair as necessary.

Simpo PDF Merge and Split Unregistered Version - http://www.simpopdf.com

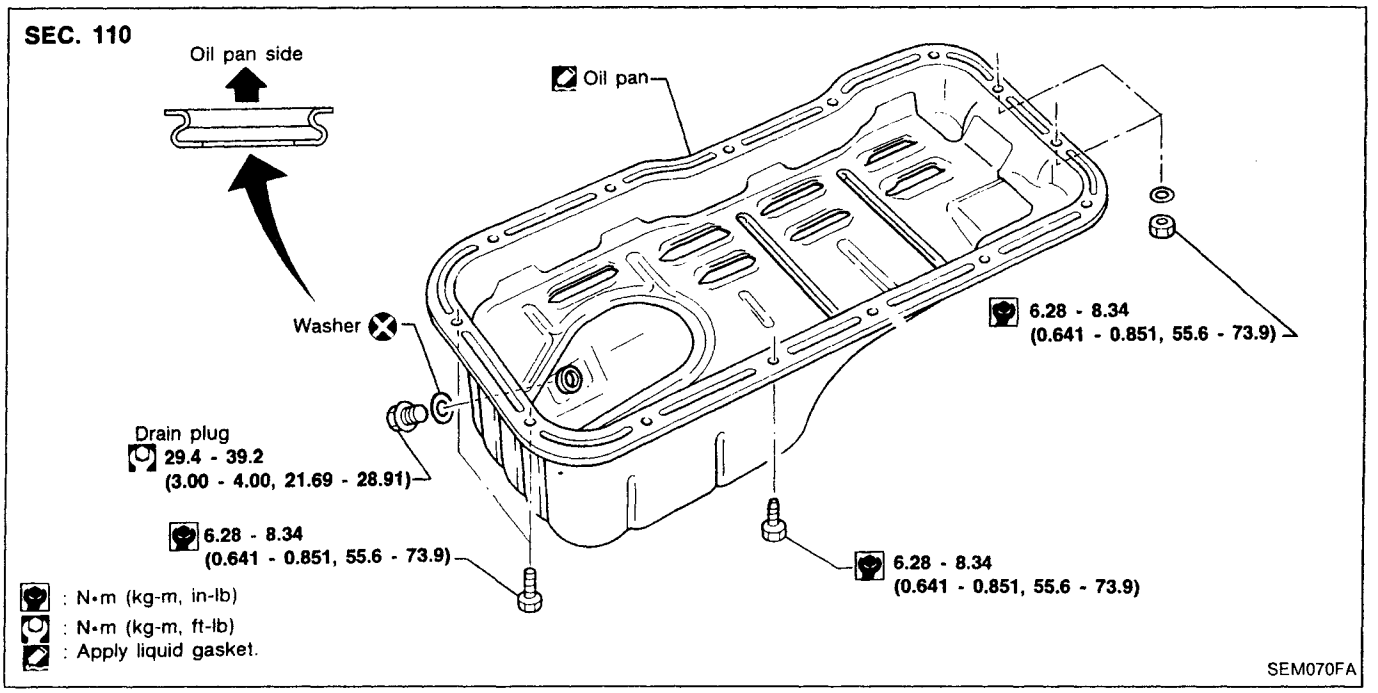

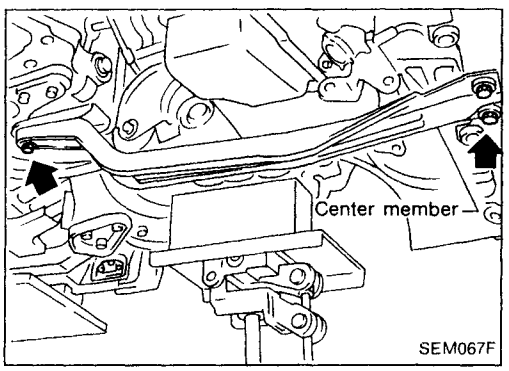

Removal

1. Remove undercovers.
2. Drain engine oil.
3. Remove front exhaust tube. Refer to "Exhaust system" in FE section.
4. Remove center member.

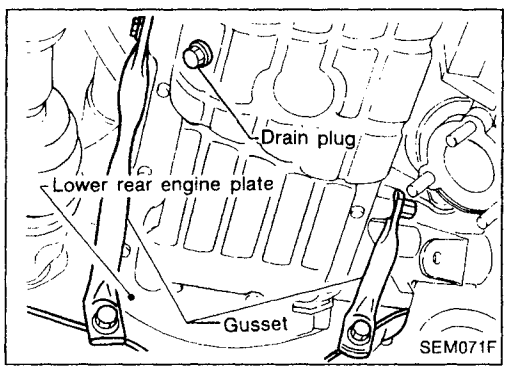

5. Remove engine front and rear gussets.
6. Remove engine lower rear plate (A/T models).

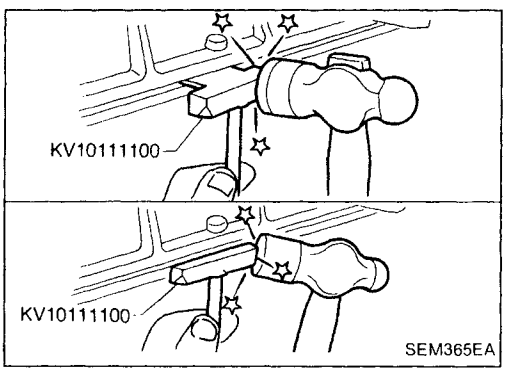

7. Remove oil pan.

(1) Insert Tool between cylinder block and oil pan.

- **Be careful not to damage aluminum mating face.**
- **Do not insert screwdriver, or oil pan flange will be deformed.**

(2) Slide Tool by tapping its side with a hammer, and remove oil pan.

Simpo PDF Merge and Split Unregistered Version - http://www.simpopdf.com

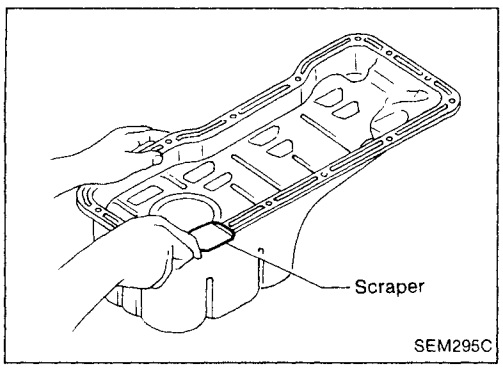

Installation

1. Before installing oil pan, remove all traces of liquid gasket from mating surface using a scraper.
- Also remove traces of liquid gasket from mating surface of cylinder block.

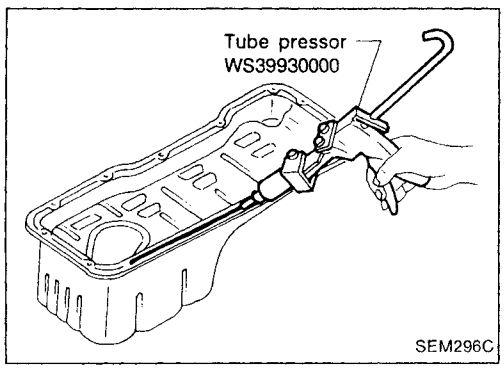

2. Apply a continuous bead of liquid gasket to mating surface of oil pan.
- **Use Genuine Liquid Gasket or equivalent.**

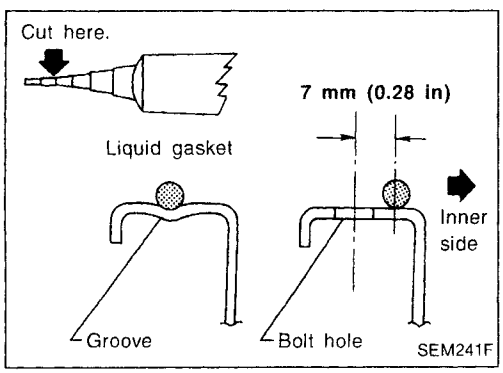

- Be sure liquid gasket is 3.5 to 4.5 mm (0.138 to 0.177 in) wide.
- Apply liquid gasket to inner sealing surface as shown in figure.
- Attaching should be done within 5 minutes after coating.

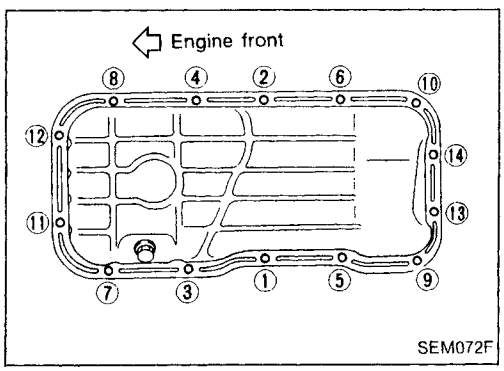

3. Install oil pan.
- Tighten oil pan bolts in the numerical order.
- Wait at least 30 minutes before refilling engine oil.
4. Install other removed parts in the reverse order of removal.

Simpo PDF Merge and Split Unregistered Version - http://www.simpopdf.com

WITH VTC

SEC. 111•120•130•135

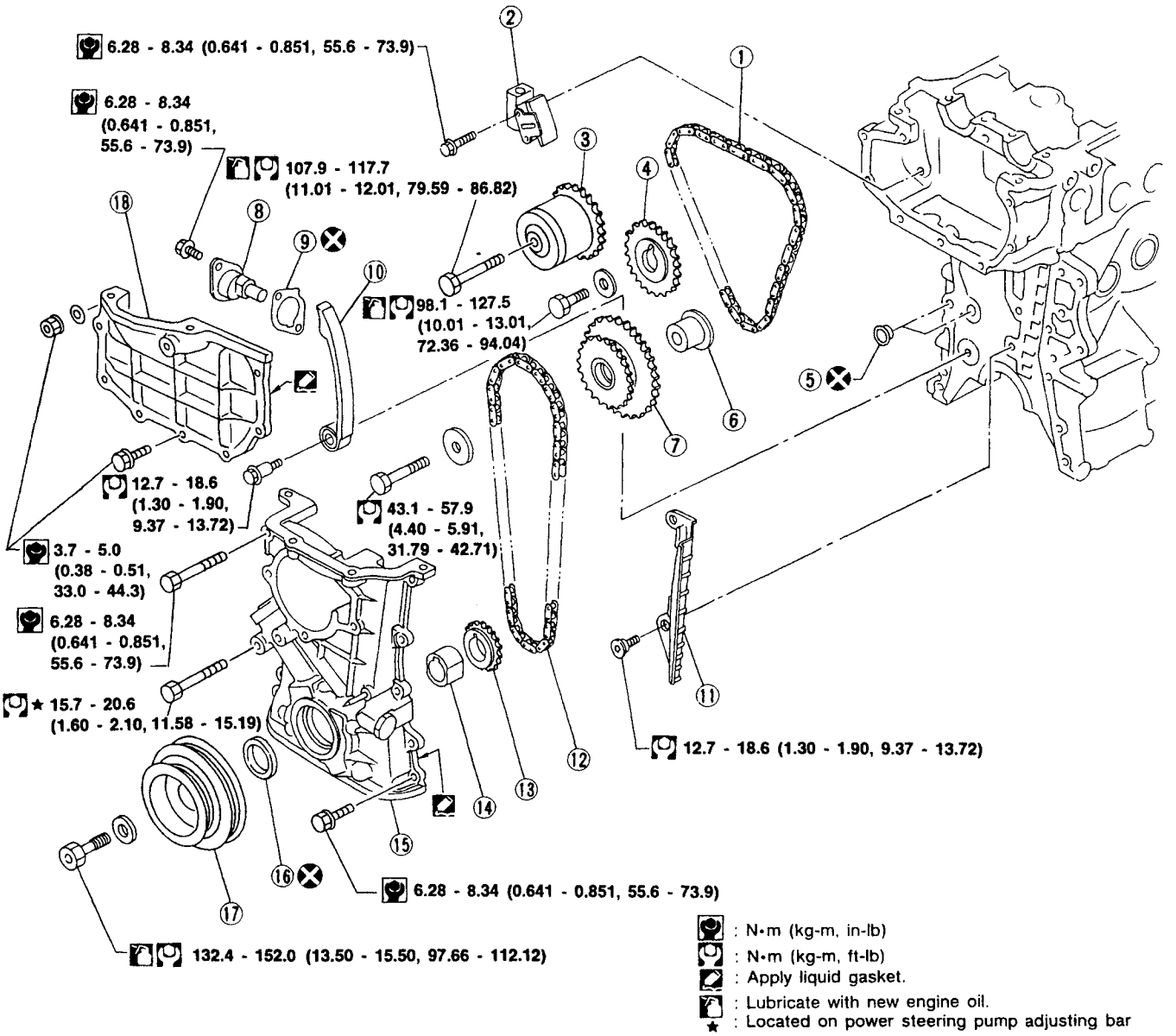

SEM069FB

① Upper timing chain
② Upper timing chain tensioner
③ VTC camshaft sprocket (Intake)
④ Camshaft sprocket (Exhaust)
⑤ O-ring
⑥ Idler shaft
⑦ Idler sprocket
⑧ Lower timing chain tensioner
⑨ Gasket
⑩ Slack side timing chain guide
⑪ Timing chain tension guide
⑫ Lower timing chain
⑬ Crankshaft sprocket
⑭ Oil pump drive spacer
⑮ Front cover
⑯ Oil seal
⑰ Crankshaft pulley
⑱ Cylinder head front cover

Simpo PDF Merge and Split Unregistered Version - http://www.simpopdf.com

WITHOUT VTC

SEC. 111•120•130•135

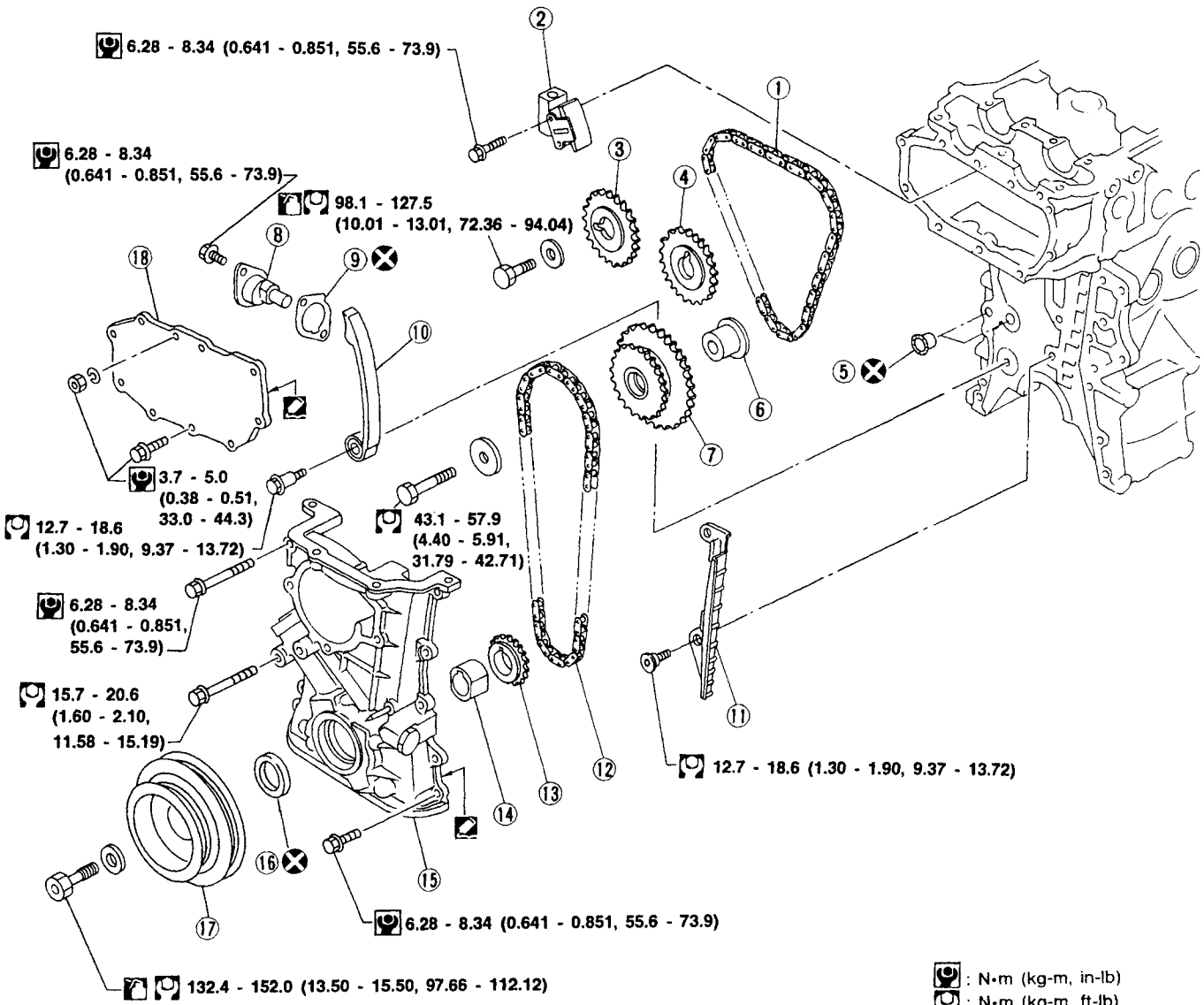

SEM068FA

① Upper timing chain
② Upper chain tensioner
③ Camshaft sprocket (Intake)
④ Camshaft sprocket (Exhaust)
⑤ O-ring
⑥ Idler shaft
⑦ Idler sprocket
⑧ Lower chain tensioner
⑨ Gasket
⑩ Slack side timing chain guide
⑪ Timing chain guide
⑫ Lower timing chain
⑬ Crankshaft sprocket
⑭ Oil pump drive spacer
⑮ Front cover
⑯ Oil seal
⑰ Crankshaft pulley
⑱ Cylinder head front cover

Simpo PDF Merge and Split Unregistered Version - http://www.simpopdf.com

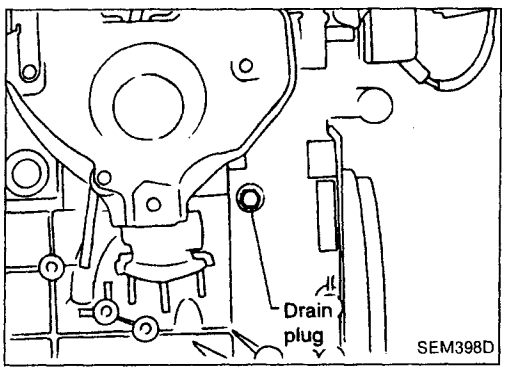

CAUTION:

- **After removing timing chain, do not turn crankshaft and camshaft separately, or valves will strike piston heads.**
- **When installing camshafts, chain tensioner, oil seals, or other sliding parts, lubricate contacting surfaces with new engine oil.**
- **Apply new engine oil to bolt threads and seat surfaces when installing cylinder head, camshaft sprocket, crankshaft pulley, and camshaft brackets.**

Removal

1. Drain engine coolant from radiator and cylinder block.
   Be careful not to spill coolant on drive belts.
2. Release fuel pressure.
   Refer to "Releasing Fuel Pressure" in EC section.
3. Remove the following belts.
   - Power steering pump drive belt
   - Alternator drive belt
4. Remove power steering pulley and pump with bracket.
5. Remove air duct to intake manifold collector.
6. Remove front right-side wheel.
7. Remove front right-side splash cover.
8. Remove front undercovers.
9. Remove front exhaust tube.

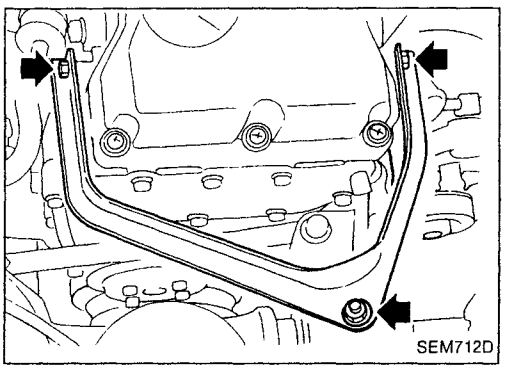

10. Remove cylinder head front mounting bracket.

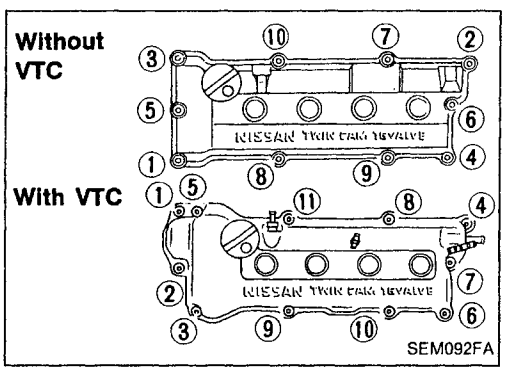

11. Remove rocker cover.
12. Remove distributor cap.
13. Remove all spark plugs.
14. Remove intake manifold support.

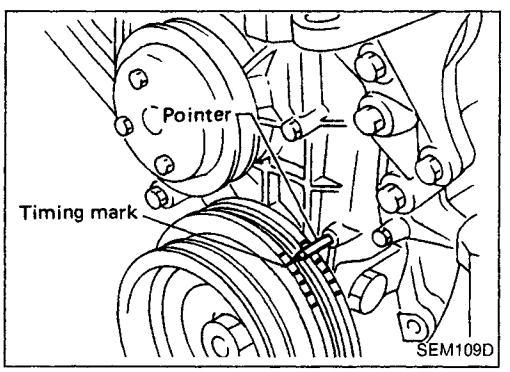

15. Set No. 1 piston at TDC on its compression stroke.

Simpo PDF Merge and Split Unregistered Version - http://www.simpopdf.com

Removal (Cont'd)

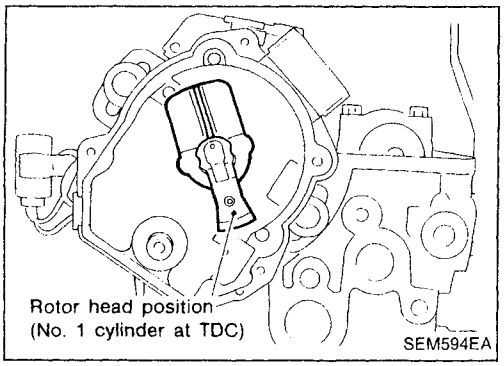

- Make sure No. 1 cylinder is at TDC by looking at distributor rotor position.

16. Remove distributor.
17. Remove cylinder head front cover.
18. Remove water pump pulley.

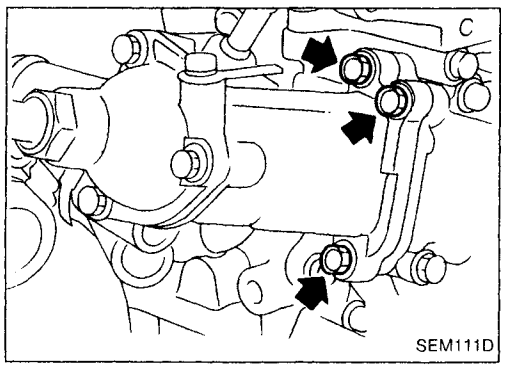

19. Remove thermostat housing.

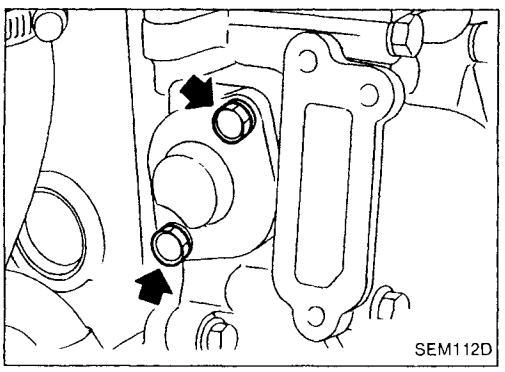

20. Remove lower chain tensioner.

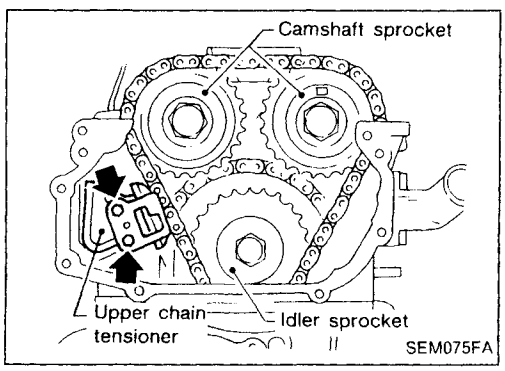

21. Remove upper chain tensioner.
22. Loosen idler sprocket bolt.
23. Remove camshaft sprocket bolts.
24. Remove camshaft sprockets.
25. Remove camshaft brackets and camshafts.
- **These parts should be reassembled in their original positions.**
- **Bolts should be loosened in two or three steps.**

26. Remove idler sprocket bolt.

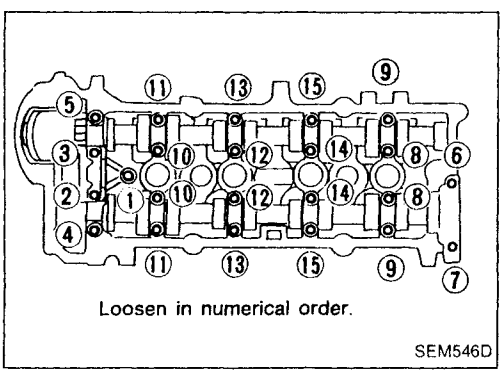

27. Remove cylinder head with manifolds.
- **Head warpage or cracking could result from removing in incorrect order.**
- **Cylinder head bolts should be loosened in two or three steps.**

28. Remove idler sprocket shaft from rear side.
29. Remove upper timing chain.
30. Remove center member.
31. Remove oil pan. Refer to "Removal" in "OIL PAN" (EM-16).
32. Remove oil strainer.
33. Remove crankshaft pulley.
34. Support engine with a suitable hoist or jack.

Simpo PDF Merge and Split Unregistered Version - http://www.simpopdf.com

Removal (Cont'd)

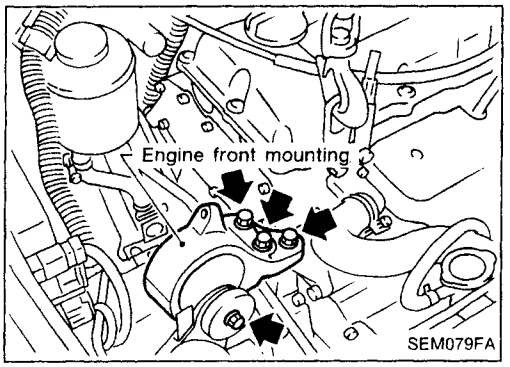

35. Remove engine front mounting.

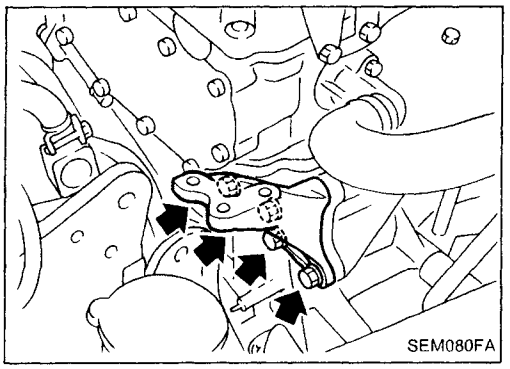

36. Remove engine front mounting bracket.

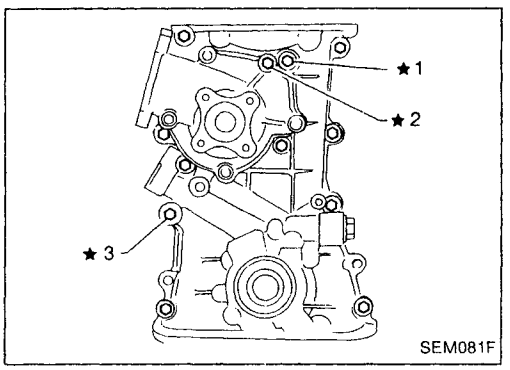

37. Remove front cover bolts and front cover as shown.
★1: Located on engine front mounting bracket
★2: Located on water pump
★3: Located on power steering pump adjusting bar

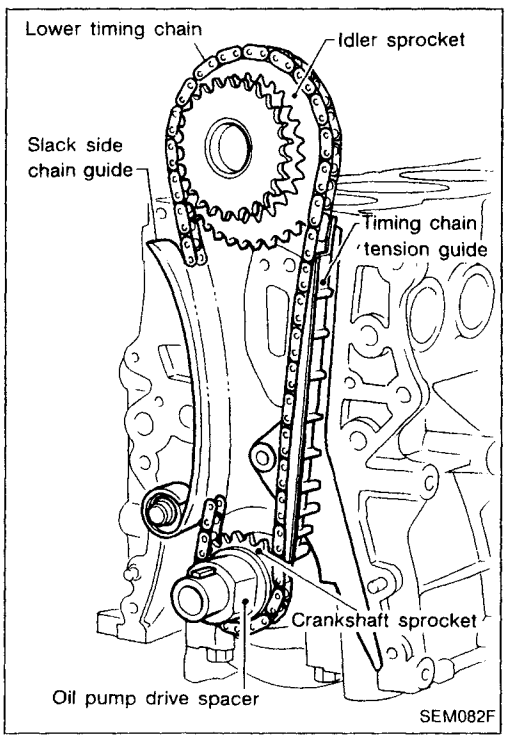

38. Remove idler sprocket.
39. Remove lower timing chain.
40. Remove oil pump drive spacer.
41. Remove chain guides.
42. Remove crankshaft sprocket.

Simpo PDF Merge and Split Unregistered Version - http://www.simpopdf.com

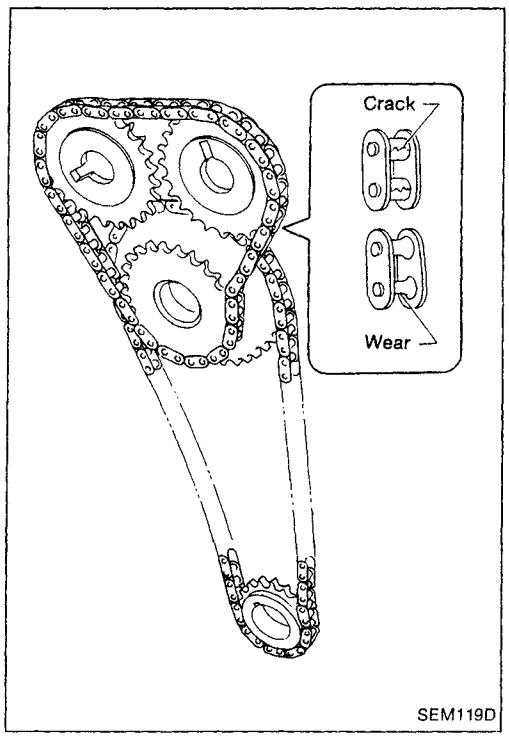

Inspection

Check for cracks and excessive wear at roller links. Replace if necessary.

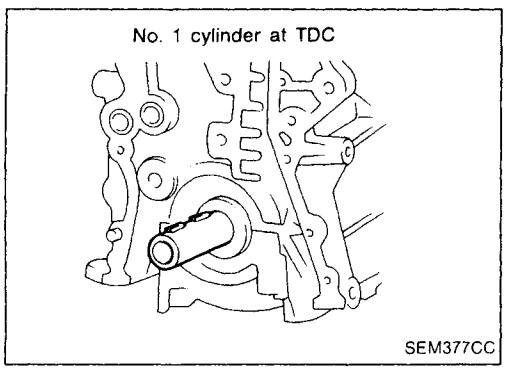

Installation

1. Position crankshaft so that No. 1 piston is at TDC and key way is at 12 o'clock.

a. Install crankshaft sprocket.

- **Make sure mating marks on crankshaft sprocket face front of engine.**

b. Install oil pump drive spacer.

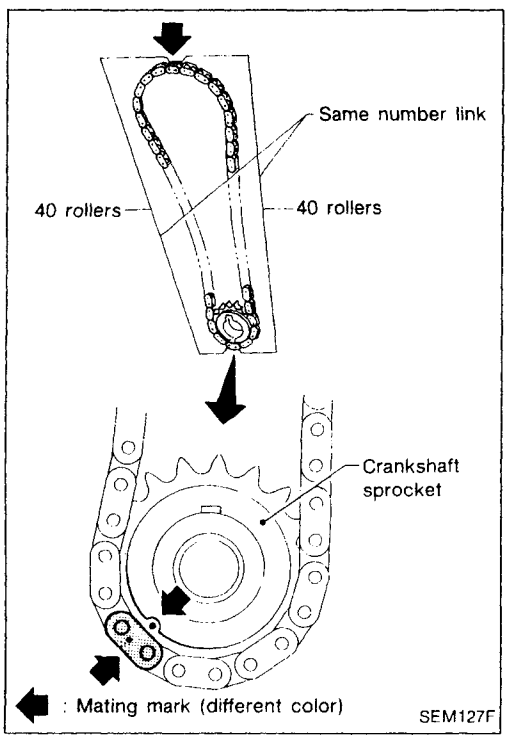

2. Install chain guide.
3. Install crankshaft sprocket and lower timing chain.

- **Set timing chain by aligning its mating mark with the one on crankshaft sprocket.**
- **Make sure sprocket's mating mark faces engine front.**
- **The number of links between alignment marks are the same for the left and right sides. Either side can be used during alignment with the sprocket.**

Simpo PDF Merge and Split Unregistered Version - http://www.simpopdf.com

Installation (Cont'd)

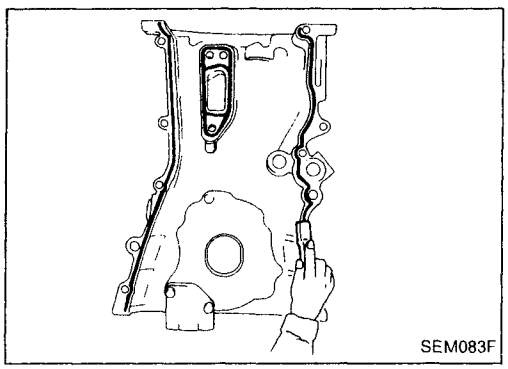

4. Before installing front cover, remove all traces of liquid gasket from mating surface using a scraper.
- Also remove traces of liquid gasket from mating surface of cylinder block.

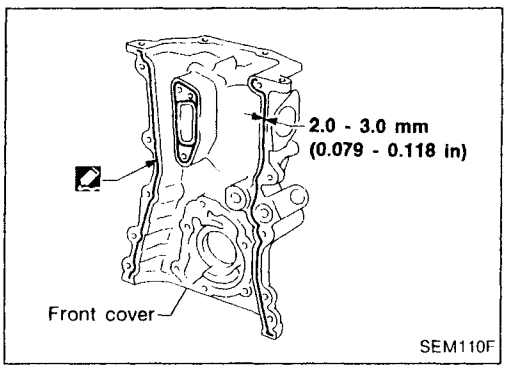

5. Apply liquid gasket to front cover.
6. Install front cover.
- **Check alignment of mating marks on chain and crankshaft sprocket.**
- **Align oil drive spacer with oil pump.**
- **Place timing chain to the side of chain guide. This prevents the chain from making contact with water seal area of front cover.**
- **Make sure two O-rings are present.**
- **Be careful not to damage oil seal when installing front cover.**

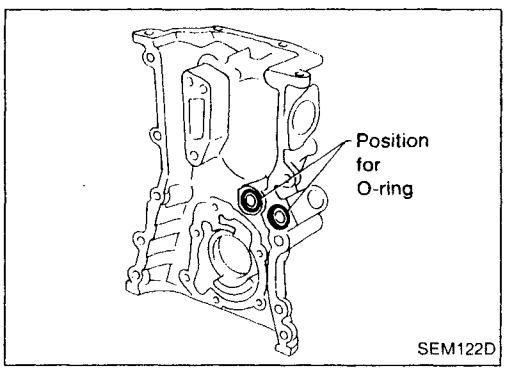

7. Install engine front mounting bracket and mounting.
8. Install oil strainer.
9. Install oil pan. Refer to "Installation" in "OIL PAN" (EM-16).
10. Install crankshaft pulley.
11. Install center member.

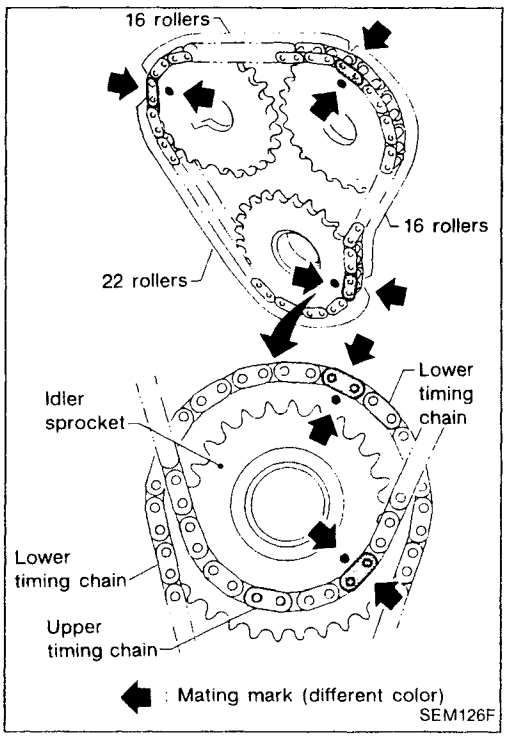

12. Set idler sprocket by aligning the mating mark on the larger sprocket with mating mark on the lower timing chain.
13. Install upper timing chain and set it by aligning mating marks on the smaller sprocket with mating mark on upper timing chain.
- **Make sure sprocket's mating mark faces engine front.**
14. Install idler sprocket shaft from the rear side.

Simpo PDF Merge and Split Unregistered Version - http://www.simpopdf.com

Installation (Cont'd)

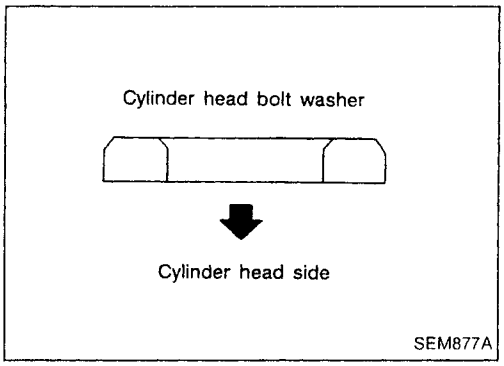

15. Install cylinder head with new gasket.
- **Be sure to install washers between bolts and cylinder head.**
- **Do not rotate crankshaft and camshaft separately, or valves will strike piston heads.**
- **Apply new engine oil to cylinder head bolt threads and seat surfaces.**

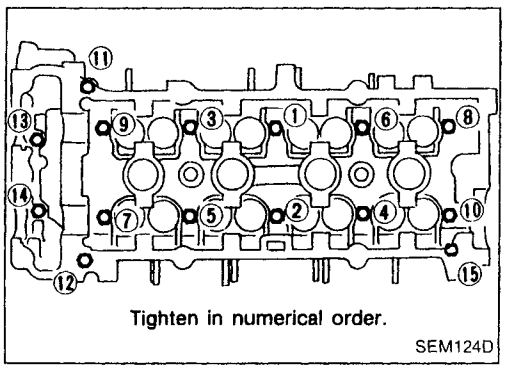

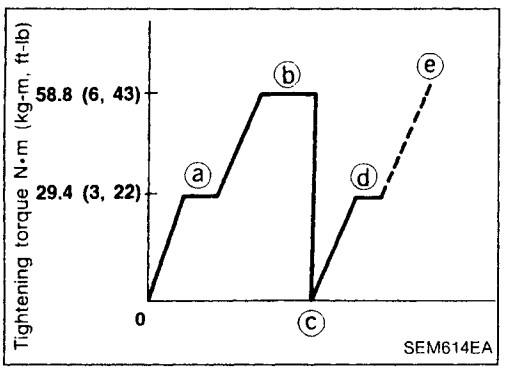

- **Tightening procedure**

ⓐ Tighten bolts to 29.4 N·m (3 kg-m, 22 ft-lb).
ⓑ Tighten bolts to 58.8 N·m (6 kg-m, 43 ft-lb).
ⓒ Loosen bolts completely.
ⓓ Tighten bolts to 29.4 N·m (3 kg-m, 22 ft-lb).
ⓔ Turn bolts 50 to 55 degrees clockwise or if angle wrench is not available, tighten bolts to 58.8 ± 4.9 N·m (6 ± 0.5 kg-m, 43.4 ± 3.6 ft-lb).
ⓕ Tighten bolts (⑪ - ⑮) to 6.3 to 8.3 N·m (0.64 to 0.85 kg-m, 55.6 to 73.8 in-lb).

	Tightening torque N·m (kg-m, ft-lb)				
	ⓐ	ⓑ	ⓒ	ⓓ	ⓔ, ⓕ
Bolts (① - ⑩)	29.4 (3, 22)	58.8 (6, 43)	0 (0, 0)	29.4 (3, 22)	50 - 55 degrees or 58.8 ± 4.9 (6 ± 0.5, 43.4 ± 3.6 ft-lb)
Bolts (⑪ - ⑮)	—	—	—	—	6.3 - 8.3 (0.64 - 0.85, 55.6 - 73.8 in-lb)

16. Install idler sprocket bolt.

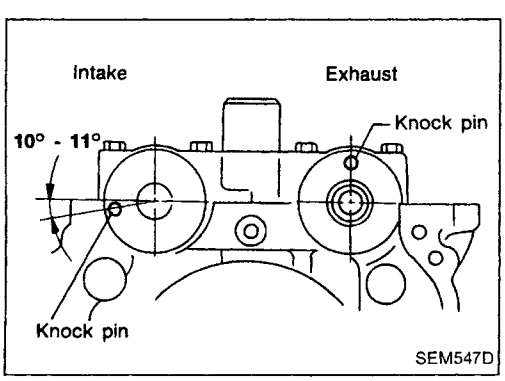

17. Install camshaft.
- **Make sure camshafts are aligned as shown in figure.**

Simpo PDF Merge and Split Unregistered Version - http://www.simpopdf.com

Installation (Cont'd)

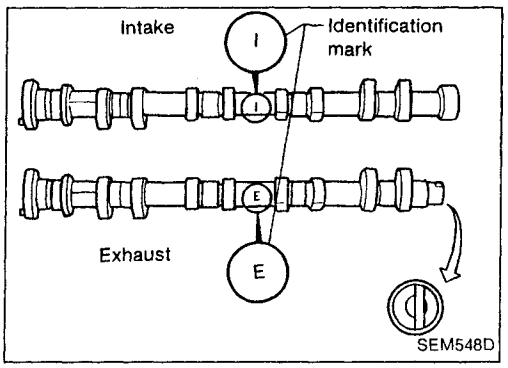

- **Identification marks are present on camshafts.**

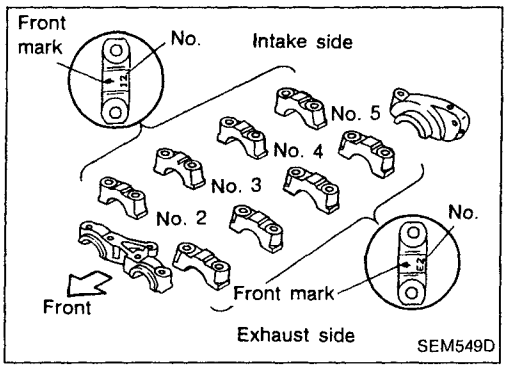

18. Install camshaft brackets and distributor bracket.

- **Make sure camshaft brackets are aligned as shown in figure.**

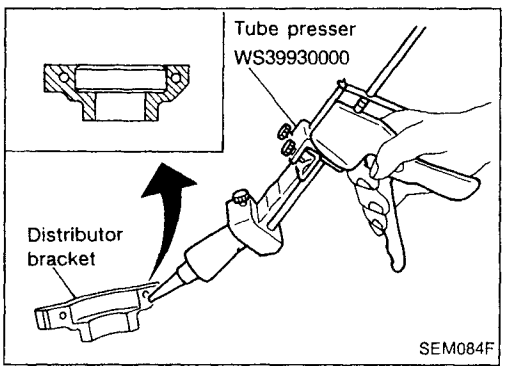

- **Apply liquid gasket to distributor bracket as shown in the figure.**

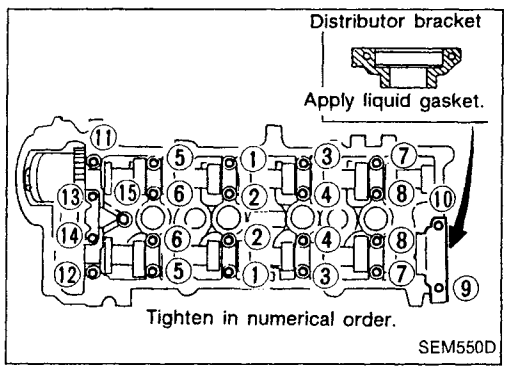

- **Apply new engine oil to bolt threads and seat surface.**
- **Tighten camshaft bracket bolts in the following steps.**

(Bolt ⑮ is applied only for GA16DE)

ⓐ Tighten bolts ⑪ - ⑮, then ① - ⑩.
: 2.0 N·m (0.204 kg-m, 17.7 in-lb)
ⓑ Tighten bolts ① - ⑮.
: 5.9 N·m (0.60 kg-m, 52.1 in-lb)
ⓒ Tighten bolts ① - ⑭.
: 9.8 - 11.8 N·m (1.00 - 1.20 kg-m, 86.8 - 104.2 in-lb)
Tighten bolt ⑮.
: 6.3 - 8.3 N·m (0.64 - 0.85 kg-m, 55.6 - 73.8 in-lb)

- **If any part of valve assembly or camshaft is replaced, check valve clearance according to reference data.**
  After completing assembly check valve clearance. Refer to "Checking" and "Adjusting" in "VALVE CLEARANCE" (EM-41).

Reference data valve clearance (Cold):
Intake
0.25 - 0.33 mm (0.010 - 0.013 in)
Exhaust
0.32 -0.40 mm (0.013 - 0.016 in)

Simpo PDF Merge and Split Unregistered Version - http://www.simpopdf.com

Installation (Cont'd)

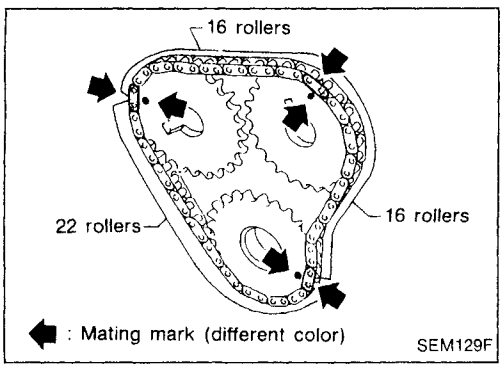

19. Assemble camshaft sprocket with chain.
- **Set timing chain by aligning mating marks with those of camshaft sprockets.**
- **Make sure sprocket's mating marks face engine front.**

20. Install camshaft sprocket bolts.
- **Apply new engine oil to bolt threads and seat surface.**

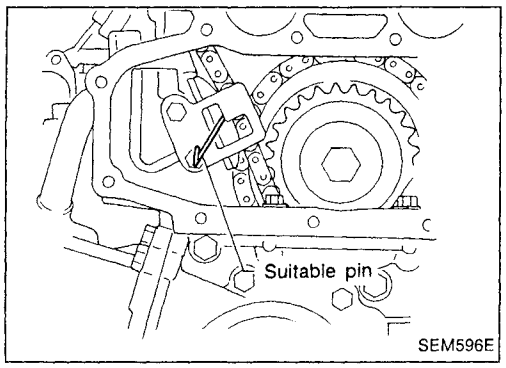

21. Install upper chain tensioner.
- **Before installing chain tensioner, insert a suitable pin into pin hole of chain tensioner.**
- **After installing chain tensioner, remove the pin.**

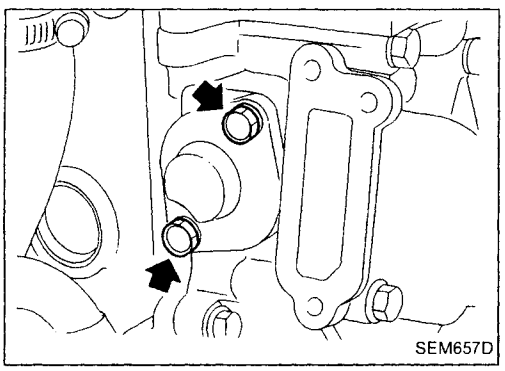

22. Install lower chain tensioner.

CAUTION:
- **Check no problems occur when engine is rotated.**
- **Make sure that No. 1 piston is set at TDC on its compression stroke.**

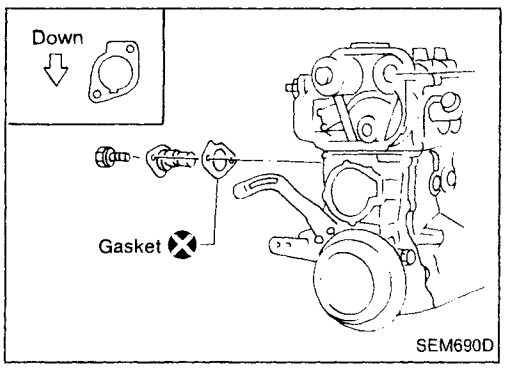

- **Make sure of the direction of the gasket before installing lower chain tensioner.**

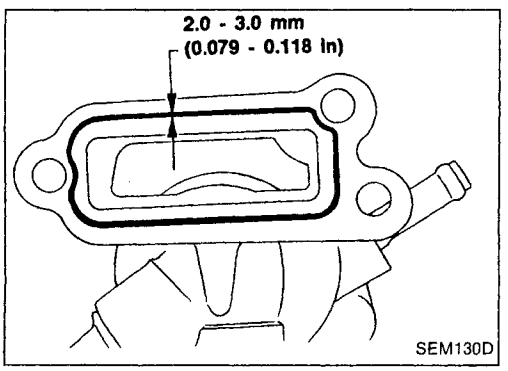

23. Apply liquid gasket to thermostat housing.
- Use Genuine Liquid Gasket or equivalent.

24. Install thermostat housing.
25. Install water pump pulley.

Simpo PDF Merge and Split Unregistered Version - http://www.simpopdf.com

Installation (Cont'd)

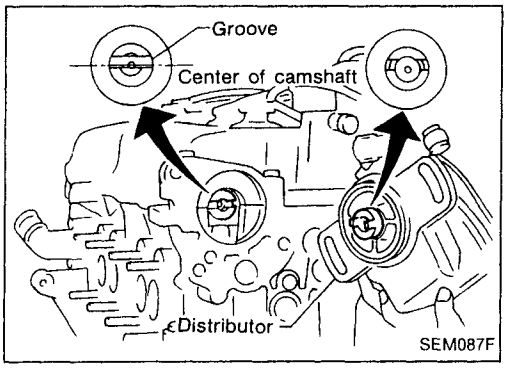

26. Install distributor.
- **Make sure that position of camshaft is as shown in figure.**

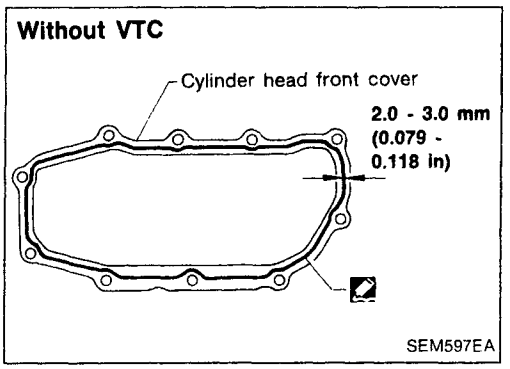

27. Install cylinder head front cover.
- Apply liquid gasket to cylinder head front cover.
- Use Genuine Liquid Gasket or equivalent.

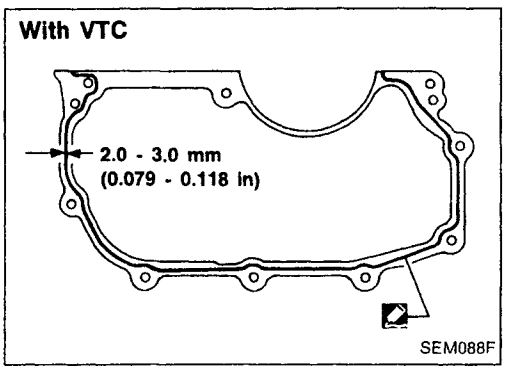

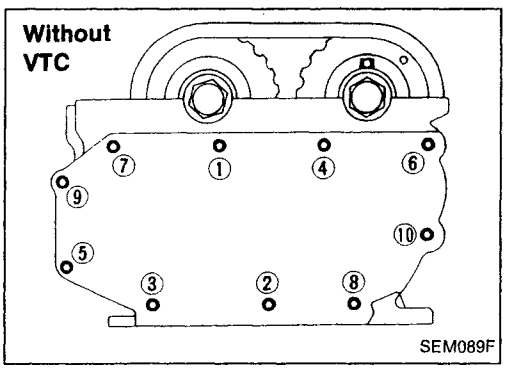

- Tighten bolts and nuts in numerical order as shown in the figure.

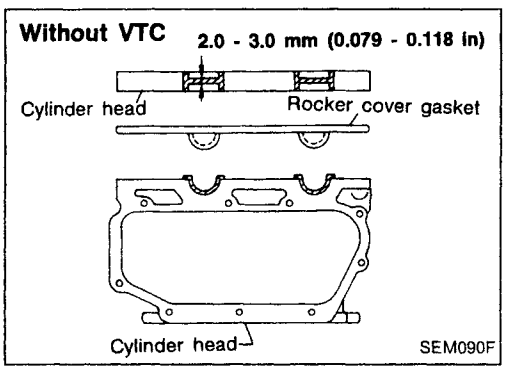

Without VTC

28. Apply liquid gasket to cylinder head.

Simpo PDF Merge and Split Unregistered Version - http://www.simpopdf.com

Installation (Cont'd)

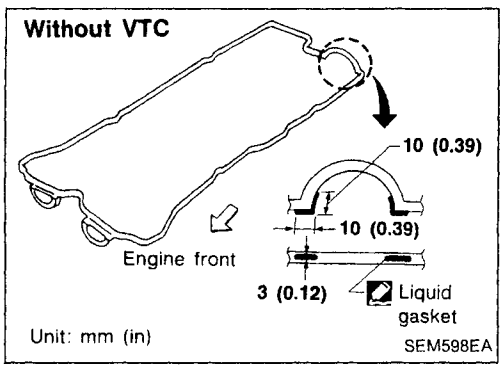

29. Apply liquid gasket to rocker cover gasket.

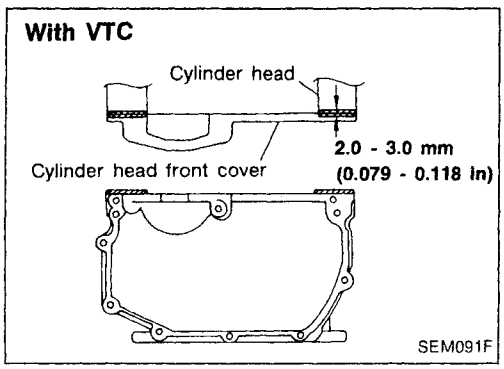

With VTC

28. Apply liquid gasket to mating surfaces of the cylinder head and cylinder head front covers shown in the figure.

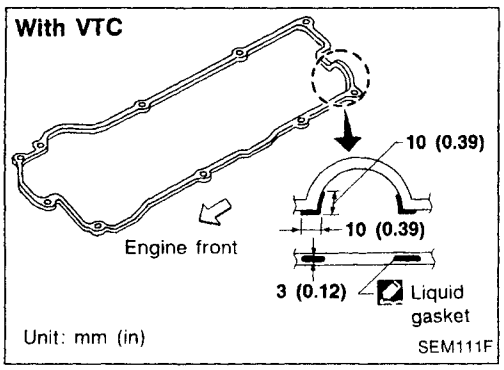

29. Apply liquid gasket to rocker cover gasket.

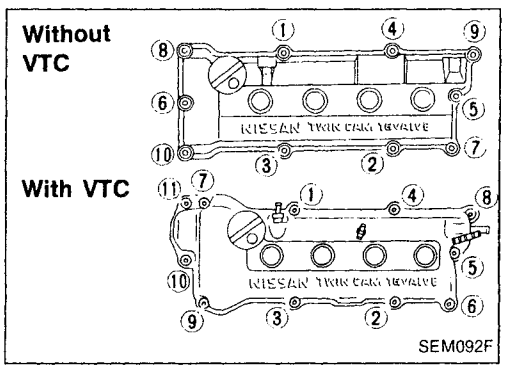

30. Install rocker cover and tighten in numerical order as shown in the figure.
31. Install all spark plugs and leads.
32. Install engine front mounting bracket and mounting.
33. Install front exhaust tube.
34. Install front undercover.
35. Install front right-splash cover.
36. Install front right wheel.
37. Install air cleaner.
38. Install power steering pulley and pump with bracket.
    To check power steering fluid, refer to MA section ("Checking Power Steering Fluid and Lines", "CHASSIS AND BODY MAINTENANCE").
39. Drive belts.
    For adjusting drive belt deflection, refer to MA section ("Checking Drive Belts", "ENGINE MAINTENANCE").

Simpo PDF Merge and Split Unregistered Version - http://www.simpopdf.com

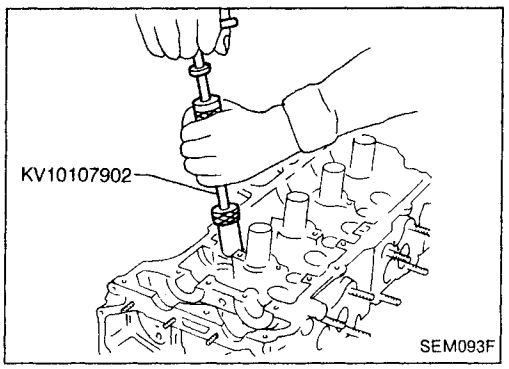

VALVE OIL SEAL

1. Remove rocker cover.
2. Remove camshaft.
3. Remove valve spring. Refer to "CYLINDER HEAD".
4. Remove valve oil seal with a suitable tool.

Piston concerned should be set at TDC to prevent valve from falling.

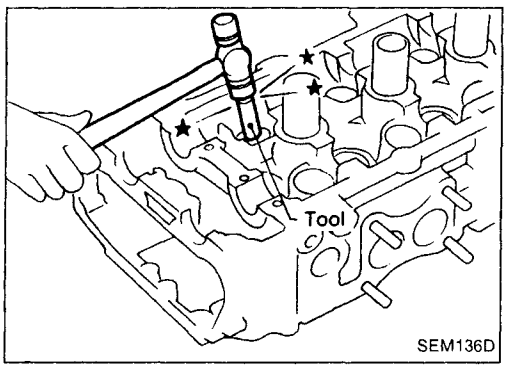

5. Apply engine oil to new valve oil seal and install it with Tool.

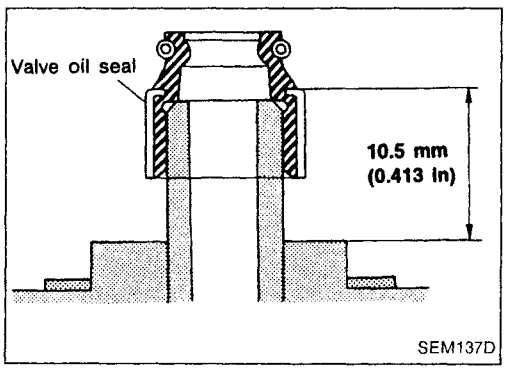

FRONT OIL SEAL

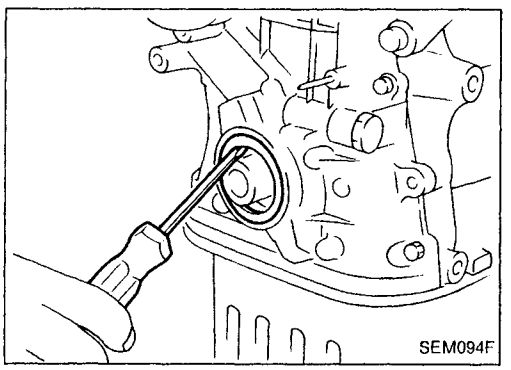

1. Remove the following parts:
- Engine undercover
- Right-side splash cover
- Alternator and power steering drive belts
- Crankshaft pulley

2. Remove front oil seal from front cover.

Be careful not to damage oil seal portion.

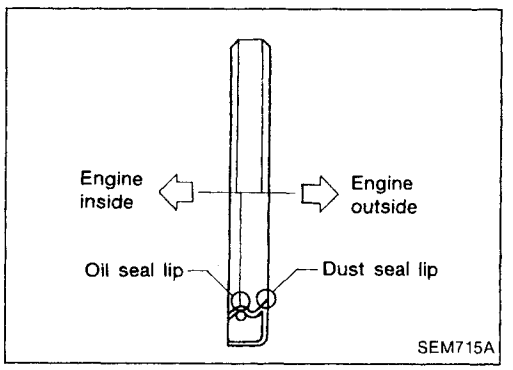

- Install new oil seal in the direction shown.

Simpo PDF Merge and Split Unregistered Version - http://www.simpopdf.com

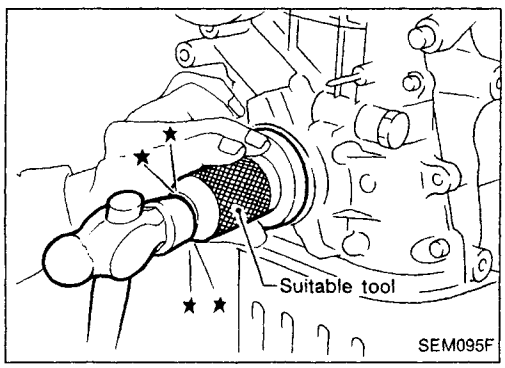

3. Apply engine oil to new oil seal and install it using a suitable tool.

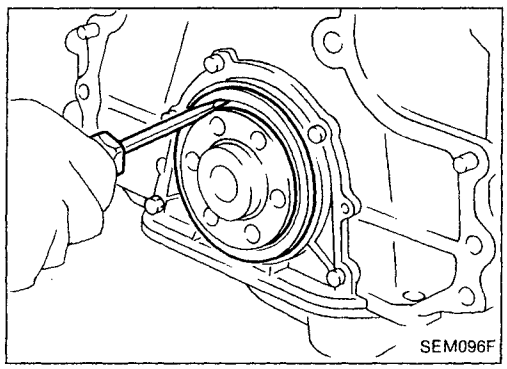

REAR OIL SEAL

1. Remove flywheel or drive plate.
2. Remove rear oil seal retainer.
3. Remove traces of liquid gasket using scraper.
4. Remove seal from rear oil seal retainer.

Be careful not to scratch rear oil seal retainer.

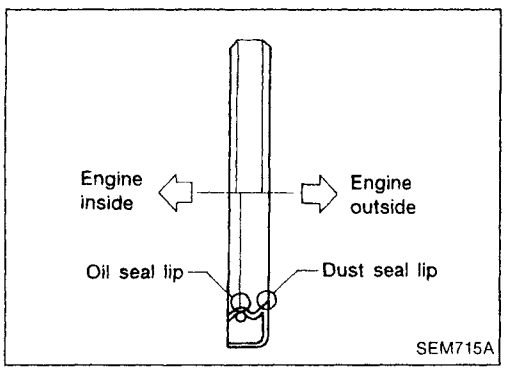

- Install new oil seal in the direction shown.

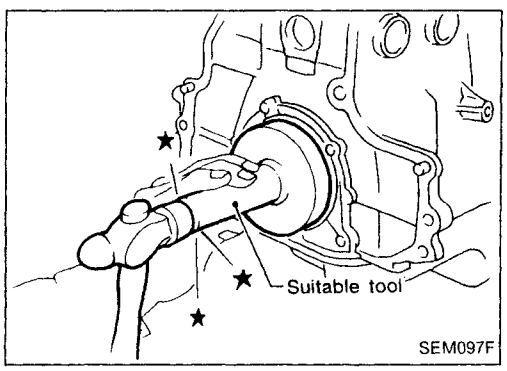

5. Apply engine oil to new oil seal and install it using a suitable tool.

Simpo PDF Merge and Split Unregistered Version - http://www.simpopdf.com

WITH VTC

SEC. 111•130

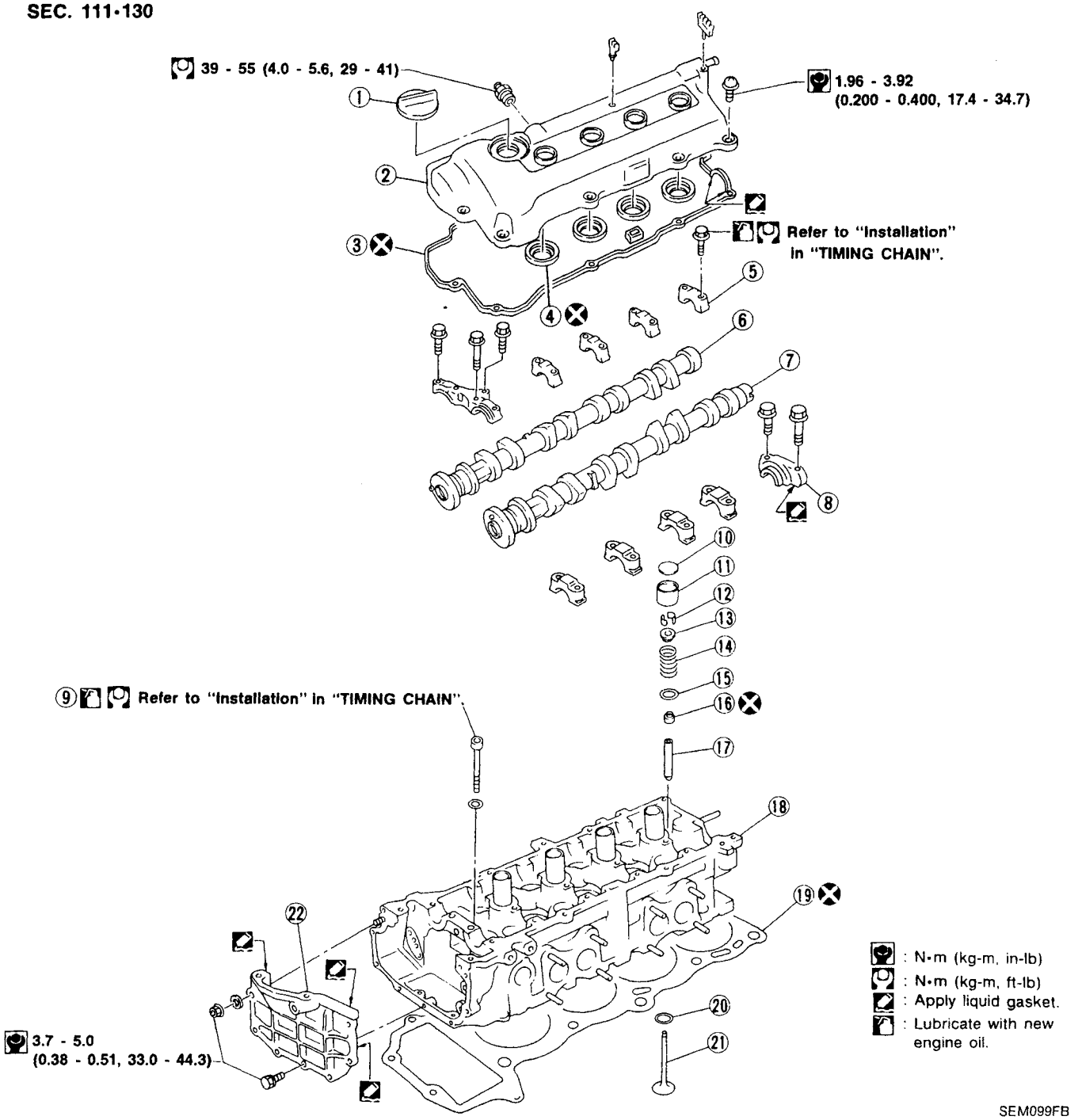

① Oil filler cap
② Rocker cover
③ Rocker cover gasket
④ Oil seal
⑤ Camshaft bracket
⑥ Intake camshaft
⑦ Exhaust camshaft
⑧ Distributor bracket
⑨ Cylinder head bolt
⑩ Shim
⑪ Valve lifter
⑫ Valve cotter
⑬ Valve spring retainer
⑭ Valve spring
⑮ Valve spring seat
⑯ Valve oil seal
⑰ Valve guide
⑱ Cylinder head
⑲ Cylinder head gasket
⑳ Valve seat
㉑ Valve
㉒ Cylinder head front cover

Simpo PDF Merge and Split Unregistered Version - http://www.simpopdf.com

WITHOUT VTC

SEC. 111•130

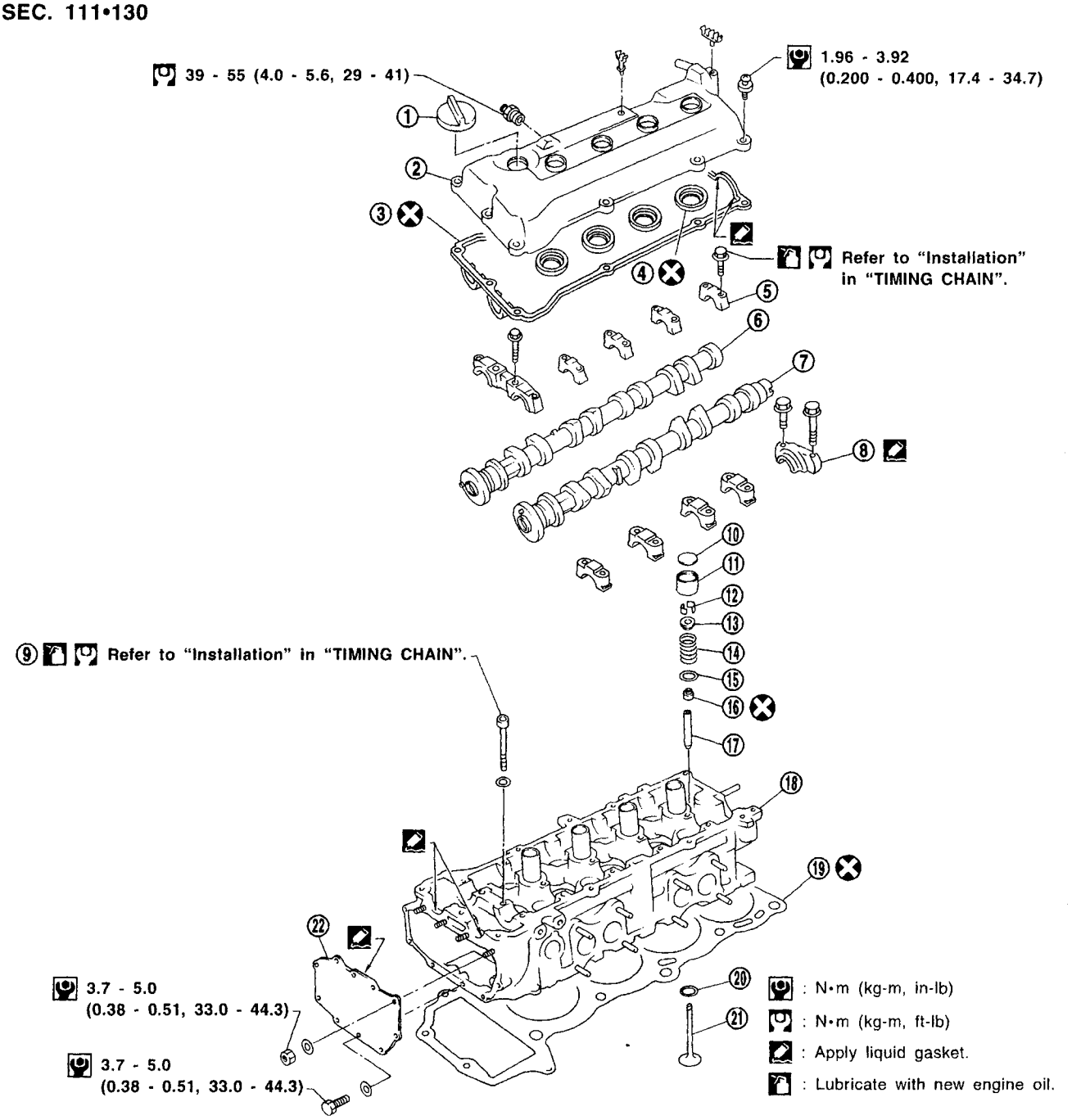

SEM244F

① Oil filler cap
② Rocker cover
③ Rocker cover gasket
④ Oil seal
⑤ Camshaft bracket
⑥ Intake camshaft
⑦ Exhaust camshaft
⑧ Distributor bracket
⑨ Cylinder head bolt
⑩ Shim
⑪ Valve lifter
⑫ Valve cotter
⑬ Valve spring retainer
⑭ Valve spring
⑮ Valve spring seat
⑯ Valve oil seal
⑰ Valve guide
⑱ Cylinder head
⑲ Cylinder head gasket
⑳ Valve seat
㉑ Valve
㉒ Cylinder head front cover

Simpo PDF Merge and Split Unregistered Version - http://www.simpopdf.com

CAUTION:
- **When installing camshaft, oil seals or other sliding parts, lubricate contacting surfaces with new engine oil.**
- **When tightening cylinder head bolts, camshaft sprocket bolts and camshaft bracket bolts, lubricate thread portions and seat surfaces of bolts with new engine oil.**
- **Attach tags to valve lifters so as not to mix them up.**

Removal

- This removal is the same procedure as those for timing chain. Refer to "Removal" in "TIMING CHAIN" (EM-20).

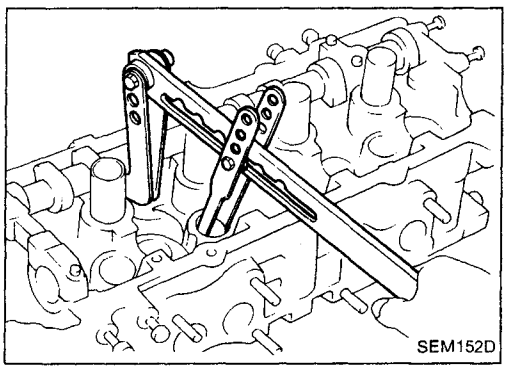

Disassembly

1. Remove valve components with Tool.
2.. Remove valve oil seal with a suitable tool.

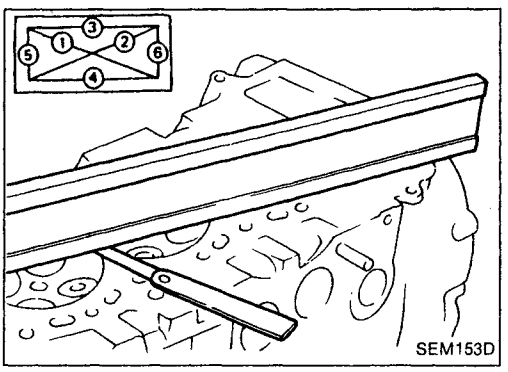

Inspection

CYLINDER HEAD DISTORTION

Clean surface of cylinder head.
Use a reliable straightedge and a feeler gauge to check the flatness of cylinder head surface.
Check along six positions shown in figure.

Head surface flatness:
Standard:
Less than 0.03 mm (0.0012 in)
Limit:
0.1 mm (0.004 in)

If beyond the specified limit, replace it or resurface it.
Resurfacing limit:
The resurfacing limit of cylinder head is determined by the cylinder block resurfacing in an engine.
Amount of cylinder head resurfacing is "A".
Amount of cylinder block resurfacing is "B".
The maximum limit is as follows:
A + B = 0.2 mm (0.008 in)

After resurfacing cylinder head, check that camshaft rotates freely by hand. If resistance is felt, cylinder head must be replaced.

Nominal cylinder head height:
117.8 - 118.0 mm (4.638 - 4.646 in)

CAMSHAFT VISUAL CHECK

Check camshaft for scratches, seizure and wear.

Simpo PDF Merge and Split Unregistered Version - http://www.simpopdf.com

Inspection (Cont'd)

CAMSHAFT RUNOUT

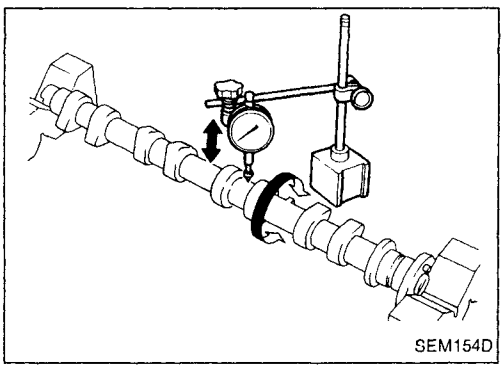
SEM154D

1. Measure camshaft runout at the center journal.
   Runout (Total indicator reading):
   Standard:
   Less than 0.02 mm (0.0008 in)
   Limit:
   0.1 mm (0.004 in)
2. If it exceeds the limit, replace camshaft.

CAMSHAFT CAM HEIGHT

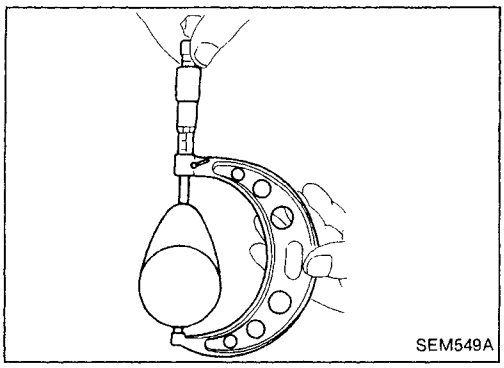
SEM549A

1. Measure camshaft cam height.

Unit: mm (in)

Engine model		GA14DE	GA15DE	GA16DE without VTC	GA16DE with VTC for Australia	GA16DE with VTC except for Australia
Standard cam height	Intake	39.380 - 39.570 (1.5504 - 1.5579)	39.880 - 40.070 (1.5701 - 1.5776)	39.380 - 39.570 (1.5504 - 1.5579)	40.610 - 40.800 (1.5988 - 1.6063)	
	Exhaust		40.056 - 40.246 (1.5770 - 1.5845)	39.880 - 40.070 (1.5701 - 1.5776)	39.910 - 40.010 (1.5713 - 1.5752)	40.056 - 40.246 (1.5770 - 1.5845)
Cam wear limit		0.20 (0.0079)				

2. If wear is beyond the limit, replace camshaft.

CAMSHAFT JOURNAL CLEARANCE

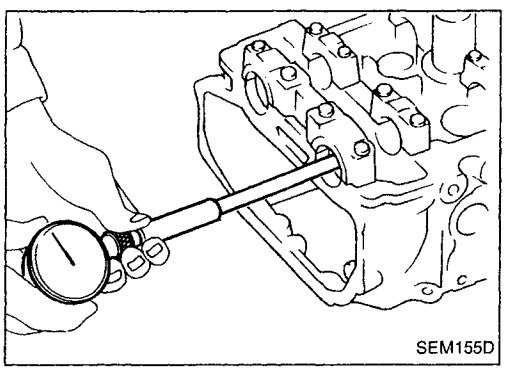
SEM155D

1. Install camshaft bracket and tighten bolts to the specified torque.
2. Measure inner diameter of camshaft bearing.
   Standard inner diameter:
   No. 1 bearing
   28.000 - 28.021 mm (1.1024 - 1.1032 in)
   No. 2 to No. 5 bearings
   24.000 - 24.021 mm (0.9449 - 0.9457 in)

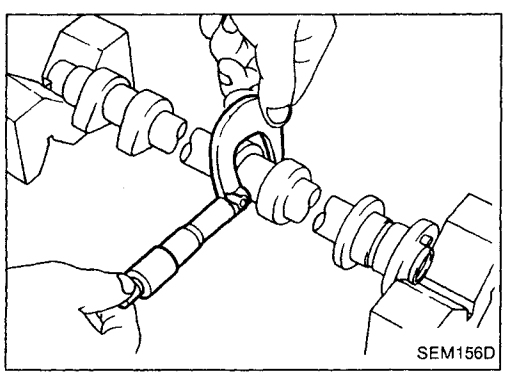
SEM156D

3. Measure outer diameter of camshaft journal.
   Standard outer diameter:
   No. 1 journal
   27.935 - 27.955 mm (1.0998 - 1.1006 in)
   No. 2 to No. 5 journals
   23.935 - 23.955 mm (0.9423 - 0.9431 in)
4. If clearance exceeds the limit, replace camshaft and/or cylinder head.
   Camshaft journal clearance:
   Standard
   0.045 - 0.086 mm (0.0018 - 0.0034 in)
   Limit
   0.15 mm (0.0059 in)

Simpo PDF Merge and Split Unregistered Version - http://www.simpopdf.com

Inspection (Cont'd)

CAMSHAFT END PLAY

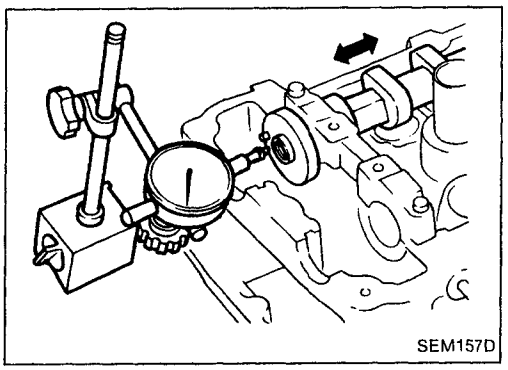
SEM157D

1. Install camshaft in cylinder head.
2. Measure camshaft end play.

Camshaft end play:

Standard

For Europe 0.070 - 0.143 mm (0.0028 - 0.0056 in)
Except for Europe 0.115 - 0.188 mm (0.0045 - 0.0074 in)

Limit

0.20 mm (0.0079 in)

CAMSHAFT SPROCKET RUNOUT

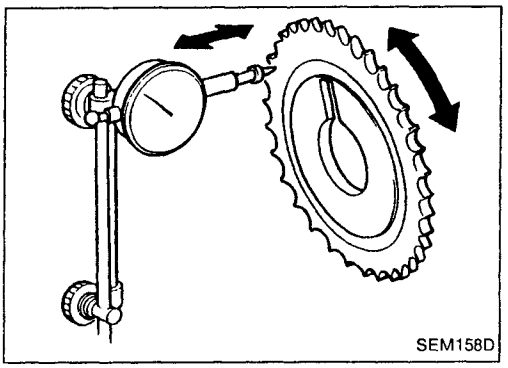
SEM158D

1. Install sprocket on camshaft.
2. Measure camshaft sprocket runout.

Runout (Total indicator reading):

Limit 0.1 mm (0.004 in)

3. If it exceeds the limit, replace camshaft sprocket.

VALVE GUIDE CLEARANCE

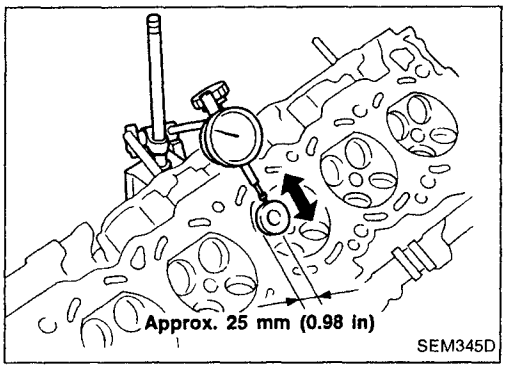

SEM345D

1. Measure valve deflection in a parallel direction with rocker arm. (Valve and valve guide mostly wear in this direction.)

Valve deflection limit (Dial gauge reading):

Intake & Exhaust

0.2 mm (0.008 in)

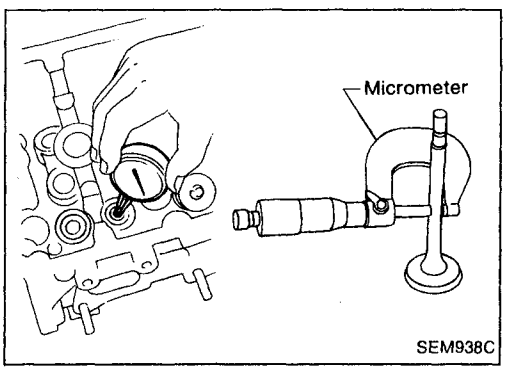

SEM938C

2. If it exceeds the limit, check valve to valve guide clearance.

a. Measure valve stem diameter and valve guide inner diameter.

b. Check that clearance is within specification.

Valve to valve guide clearance:

Unit: mm (in)

	Standard	Limit
Intake	0.020 - 0.050 (0.0008 - 0.0020)	0.1 (0.004)
Exhaust	0.040 - 0.070 (0.0016 - 0.0028)	0.1 (0.004)

c. If it exceeds the limit, replace valve or valve guide.

Simpo PDF Merge and Split Unregistered Version - http://www.simpopdf.com

Inspection (Cont'd)

VALVE GUIDE REPLACEMENT

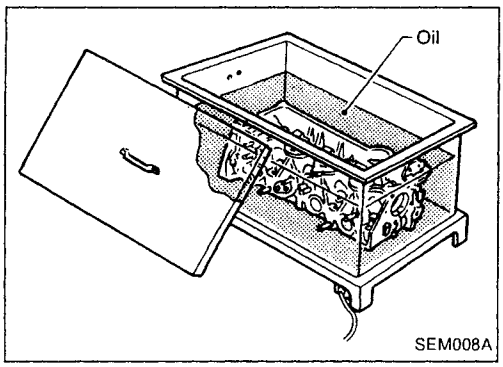

1. To remove valve guide, heat cylinder head to 110 to 120°C (230 to 248°F).

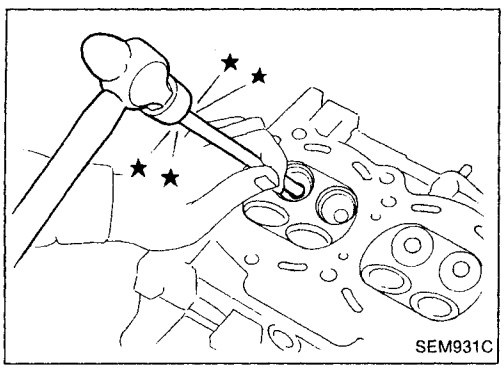

2. Drive out valve guide with a press [under a 20 kN (2 ton, 2.2 US ton, 2.0 Imp ton) pressure] or hammer and suitable tool.

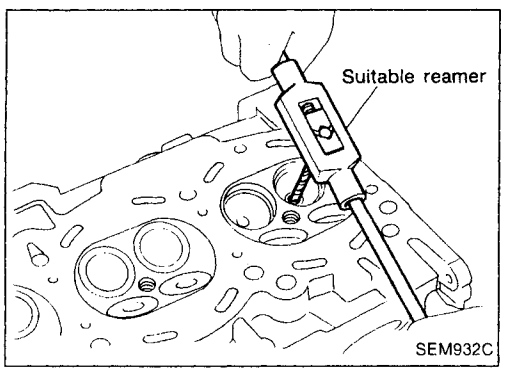

3. Ream cylinder head valve guide hole.
   Valve guide hole diameter
   (for service parts):
   Intake & Exhaust
   9.685 - 9.696 mm (0.3813 - 0.3817 in)

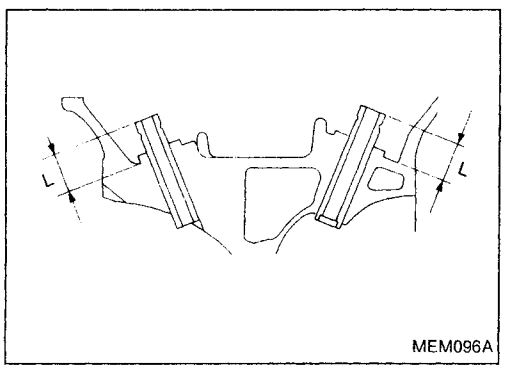

4. Heat cylinder head to 110 to 120°C (230 to 248°F) and press service valve guide into cylinder head.
   Projection "L":
   11.5 - 11.7 mm (0.453 - 0.461 in)

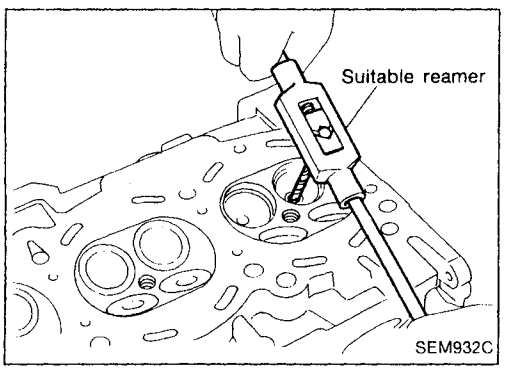

5. Ream valve guide.
   Finished size:
   Intake & Exhaust
   5.500 - 5.515 mm (0.2165 - 0.2171 in)

Simpo PDF Merge and Split Unregistered Version - http://www.simpopdf.com

Inspection (Cont'd)

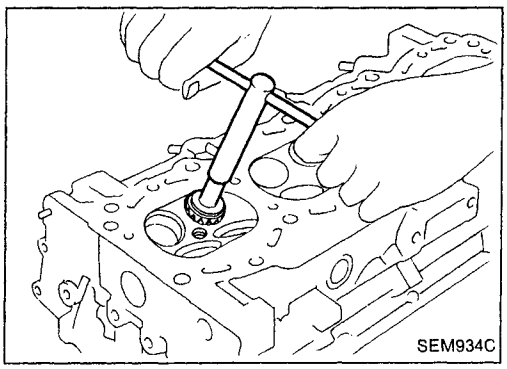
SEM934C

VALVE SEATS

Check valve seats for pitting at contact surface. Resurface or replace if excessively worn.

- **Before repairing valve seats, check valve and valve guide for wear. If they have worn, replace them. Then correct valve seat.**
- **Cut with both hands to uniform the cutting surface.**

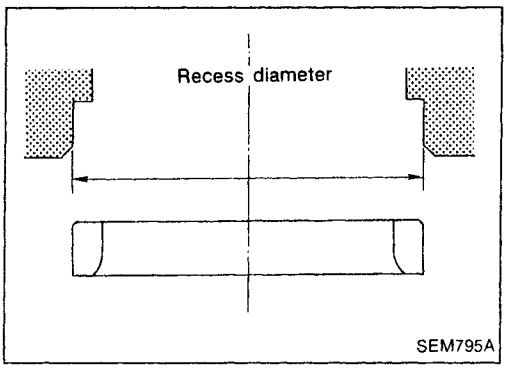

SEM795A

REPLACING VALVE SEAT FOR SERVICE PARTS

1. Bore out old seat until it collapses. Set machine depth stop so that boring cannot contact bottom face of seat recess in cylinder head.
2. Ream cylinder head recess.
   Reaming bore for service valve seat
   Oversize [0.5 mm (0.020 in)]:

Unit: mm (in)

Engine model	GA16DE without VTC, 14DE and 15DE	GA16DE with VTC
Intake	30.500 - 30.516 (1.2008 - 1.2014) 31.500 - 31.516 (1.2402 - 1.2408)*	31.500 - 31.516 (1.2402 - 1.2408)
Exhaust	25.500 - 25.516 (1.0039 - 1.0046)	26.500 - 26.516 (1.0433 - 1.0439)

*: GA16DE without VTC

Use the valve guide center for reaming to ensure valve seat will have the correct fit.

Simpo PDF Merge and Split Unregistered Version - http://www.simpopdf.com

Inspection (Cont'd)

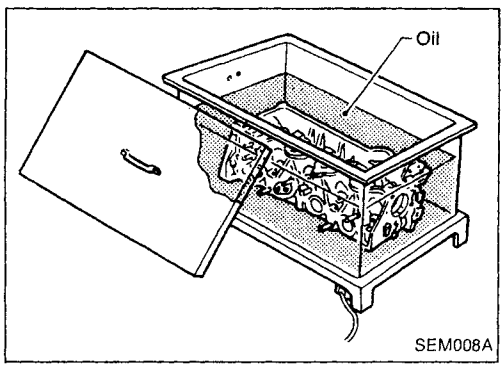

3. Heat cylinder head to 110 to 120°C (230 to 248°F).
4. Press fit valve seat until it seats on the bottom.

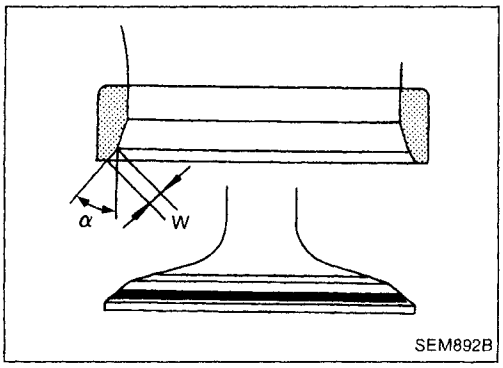

5. Cut or grind valve seat using suitable tool at the specified dimensions as shown in SDS (EM-159).
6. After cutting, lap valve seat with abrasive compound.
7. Check valve seating condition.

Seat face angle "α":
45°15′ - 45°45′ deg.
Contacting width "W":
Intake
1.06 - 1.34 mm (0.0417 - 0.0528 in)
Exhaust
1.20 - 1.68 mm (0.0472 - 0.0661 in)

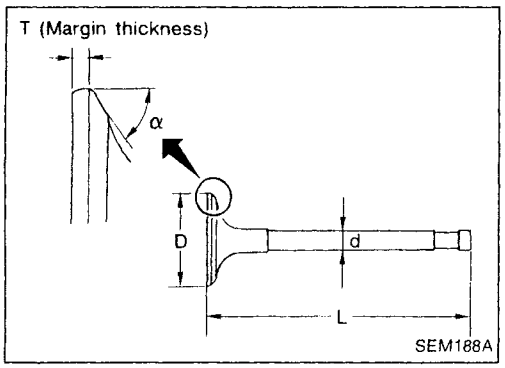

VALVE DIMENSIONS

Check dimensions in each valve. For dimensions, refer to SDS (EM-156).
When valve head has been worn down to 0.5 mm (0.020 in) in margin thickness, replace valve.
Grinding allowance for valve stem tip is 0.2 mm (0.008 in) or less.

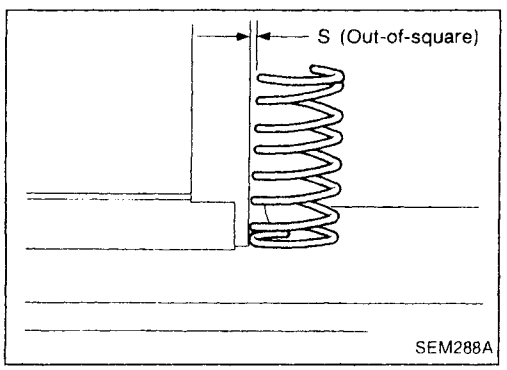

VALVE SPRING

Squareness

1. Measure "S" dimension.

Out-of-square:
Less than 1.80 mm (0.0709 in)

2. If it exceeds the limit, replace spring.

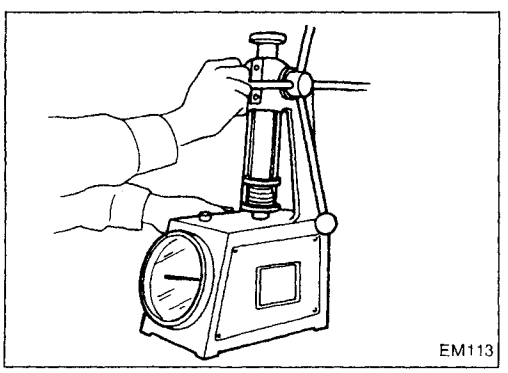

Pressure

Check valve spring pressure.

Pressure: N (kg, lb) at height mm (in)
Standard
344.42 (35.12, 77.44) at 25.26 (0.9945)
Limit
More than 323.73 (33.01, 72.79) at 25.26 (0.9945)

If it exceeds the limit, replace spring.

Simpo PDF Merge and Split Unregistered Version - http://www.simpopdf.com

Inspection (Cont'd)

VALVE LIFTER AND VALVE SHIM

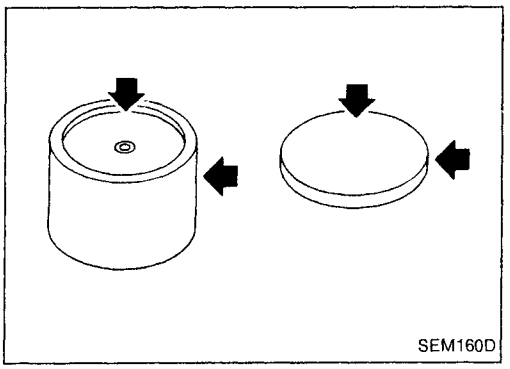
SEM160D

1. Check contact and sliding surfaces for wear or scratches.

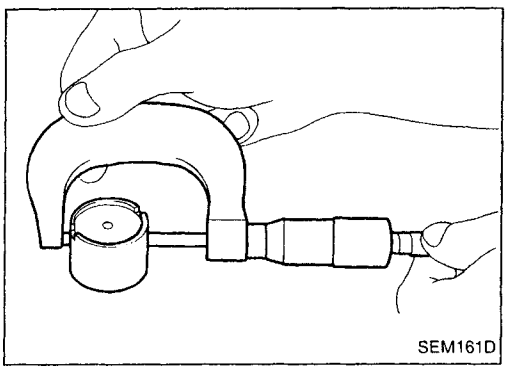
SEM161D

2. Check diameter of valve lifter and valve lifter guide bore.
   Valve lifter diameter:
   29.960 - 29.975 mm (1.1795 - 1.1801 in)

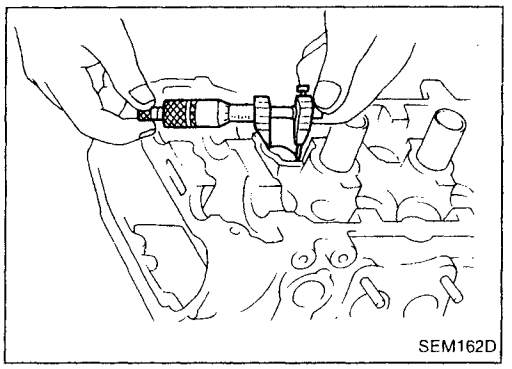
SEM162D

Lifter guide bore diameter:
30.000 - 30.021 mm (1.1811 - 1.1819 in)
Clearance between valve lifter and valve lifter guide
0.025 - 0.061 mm (0.0010 - 0.0024 in)
If it exceeds the limit, replace valve lifter or cylinder head which exceeds the standard diameter tolerance.

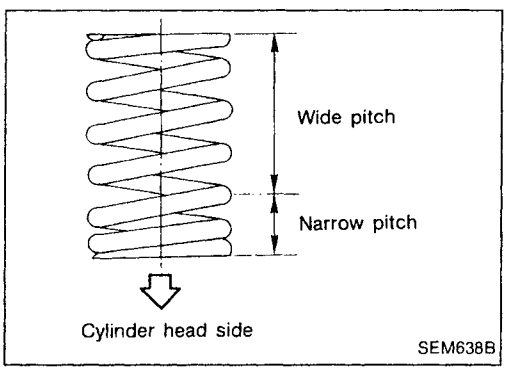

SEM638B

Assembly

1. Install valve component parts.

- **Always use new valve oil seal. Refer to OIL SEAL REPLACEMENT (EM-30).**
- **Before installing valve oil seal, install valve spring seat.**
- **After installing valve components, tap valve stem tip with a plastic hammer to assure a proper fit.**
- **Install uneven pitch type spring with its narrow pitch end toward cylinder head. (Identification color side down, if present.)**

Installation

- This installation is the same procedure as those for timing chain. Refer to "Installation" in "TIMING CHAIN" (EM-23).

Simpo PDF Merge and Split Unregistered Version - http://www.simpopdf.com

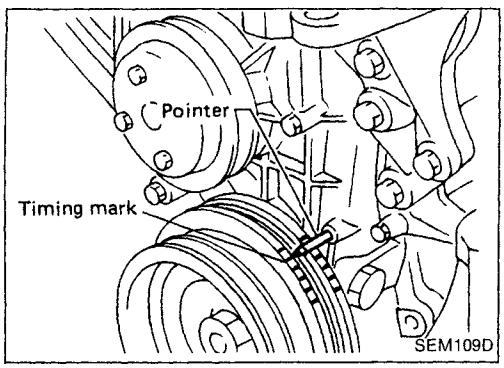

Checking

Check valve clearance while engine is warm and not running.

1. Remove rocker cover.
2. Remove all spark plugs.
3. Set No. 1 cylinder at TDC on its compression stroke.

- Align pointer with TDC mark on crankshaft pulley.
- Check that valve lifters on No. 1 cylinder are loose and valve lifters on No. 4 are tight.

  If not, turn crankshaft one revolution (360°) and align as above.

4. Check only those valves shown in the figure.

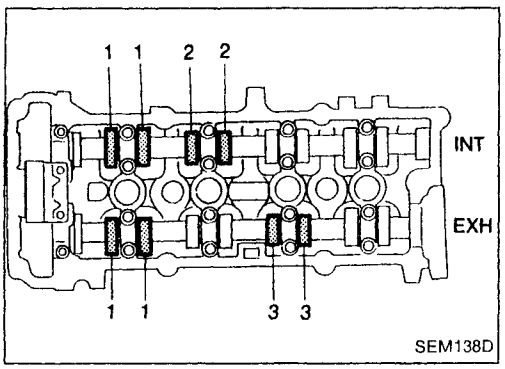

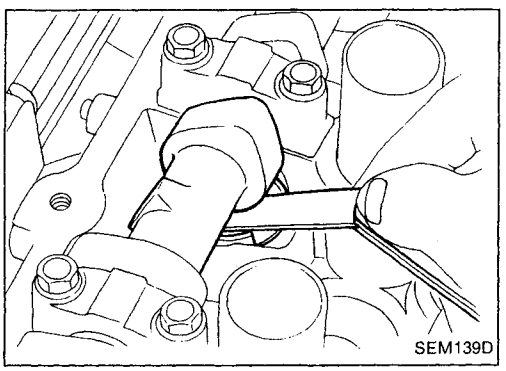

- Using a feeler gauge, measure clearance between valve lifter and camshaft.
- Record any valve clearance measurements which are out of specification. They will be used later to determine the required replacement adjusting shim.

Valve clearance for checking (Hot):

Intake

0.21 - 0.49 mm (0.008 - 0.019 in)

Exhaust

0.30 - 0.58 mm (0.012 - 0.023 in)

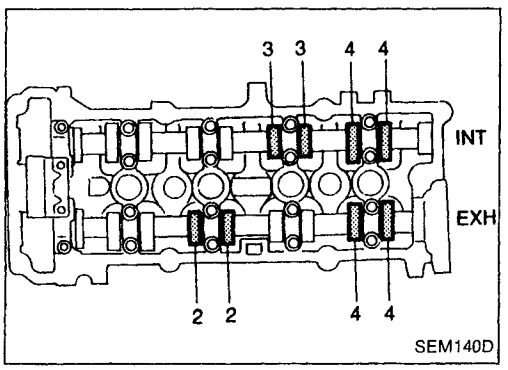

5. Turn crankshaft one revolution (360°) and align mark on crankshaft pulley with pointer.
6. Check those valves shown in the figure.

- Use the same procedure as mentioned in step 4.

7. If all valve clearances are within specification, install the following parts.

- Rocker cover
- All spark plugs

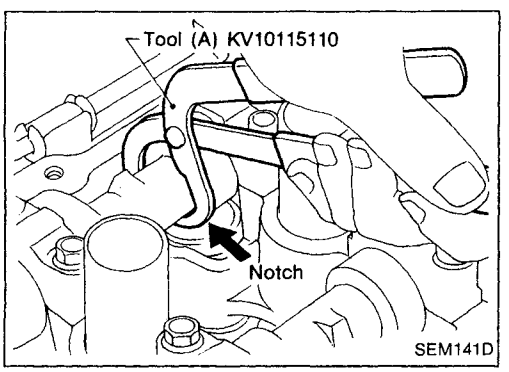

Adjusting

Adjust valve clearance while engine is cold.

1. Turn crankshaft, to position cam lobe on camshaft of valve that must be adjusted upward.
2. Place Tool (A) around camshaft as shown in figure.

Before placing Tool (A), rotate notch toward center of cylinder head (See figure.), to simplify shim removal later.

CAUTION:

Be careful not to damage cam surface with Tool (A).

Simpo PDF Merge and Split Unregistered Version - http://www.simpopdf.com

Adjusting (Cont'd)

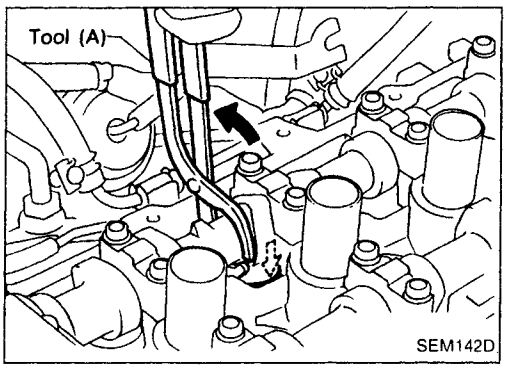

3. Rotate Tool (A) (See figure.) so that valve lifter is pushed down.

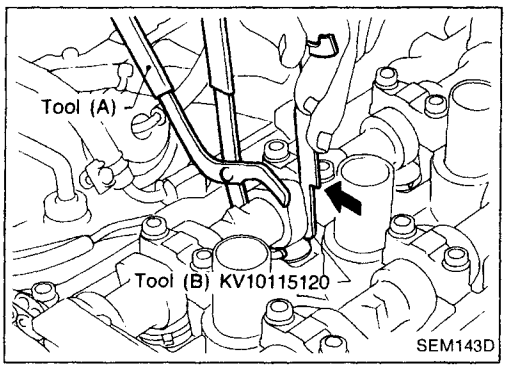

4. Place Tool (B) between camshaft and valve lifter to retain valve lifter.

CAUTION:

- **Tool (B) must be placed as close to camshaft bracket as possible.**
- **Be careful not to damage cam surface with Tool (B).**

5. Remove Tool (A).

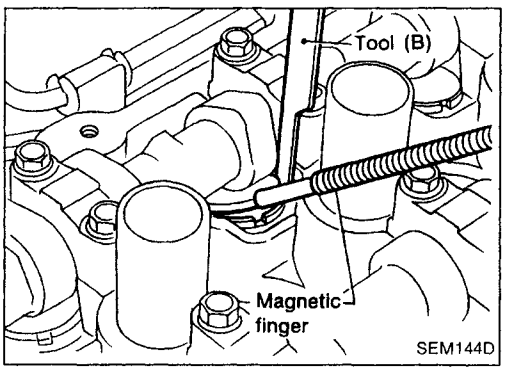

6. Remove adjusting shim using a small screwdriver and a magnetic finger.
7. Determine replacement adjusting shim size following formula.

- Using a micrometer determine thickness of removed shim.
- Calculate thickness of new adjusting shim so valve clearance comes within specified values.

R = Thickness of removed shim
N = Thickness of new shim
M = Measured valve clearance

Intake:

N = R + [M – 0.37 mm (0.0146 in)]

Exhaust:

N = R + [M – 0.40 mm (0.0157 in)]

Shims are available in 50 sizes from 2.00 mm (0.0787 in) to 2.98 mm (0.1173 in), in steps of 0.02 mm (0.0008 in).

- Select new shim with thickness as close as possible to calculated value.

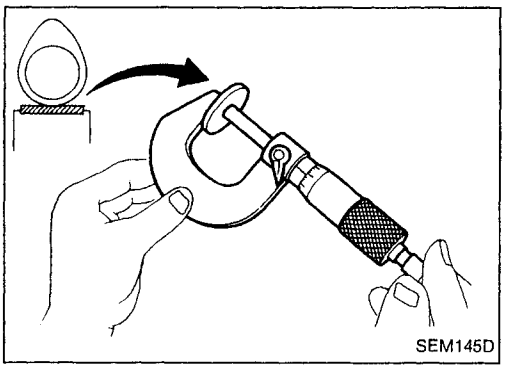

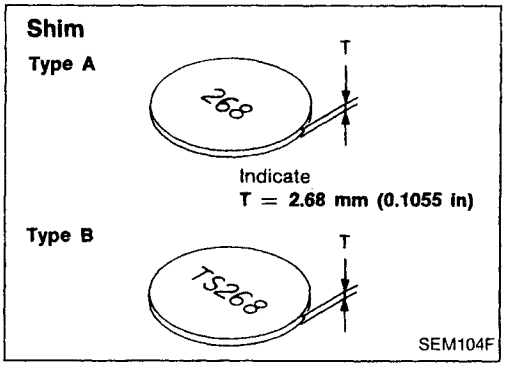

Simpo PDF Merge and Split Unregistered Version - http://www.simpopdf.com

Adjusting (Cont'd)

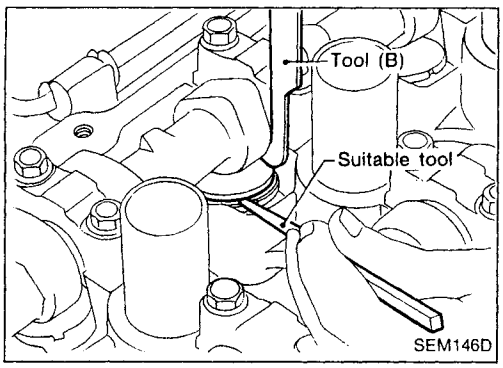

8. Install new shim using a suitable tool.
- **Install with the surface on which the thickness is stamped facing down.**

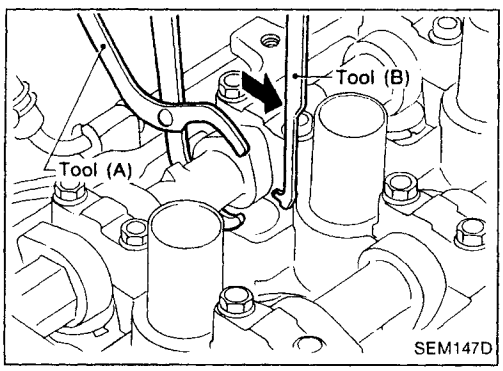

9. Place Tool (A) as mentioned in steps 2 and 3.
10. Remove Tool (B).
11. Remove Tool (A).
12. Recheck valve clearance.

Valve clearance:

Unit: mm (in)

	For adjusting		For checking
	Hot	Cold* (reference data)	Hot
Intake	0.32 - 0.40 (0.013 - 0.016)	0.25 - 0.33 (0.010 - 0.013)	0.21 - 0.49 (0.008 - 0.019)
Exhaust	0.37 - 0.45 (0.015 - 0.018)	0.32 - 0.40 (0.013 - 0.016)	0.30 - 0.58 (0.012 - 0.023)

*: At a temperature of approximately 20°C (68°F)

Whenever valve clearance are adjusted to cold specifications, check that the clearances satisfy hot specifications and adjust again if necessary.

Simpo PDF Merge and Split Unregistered Version - http://www.simpopdf.com

SEC. 112

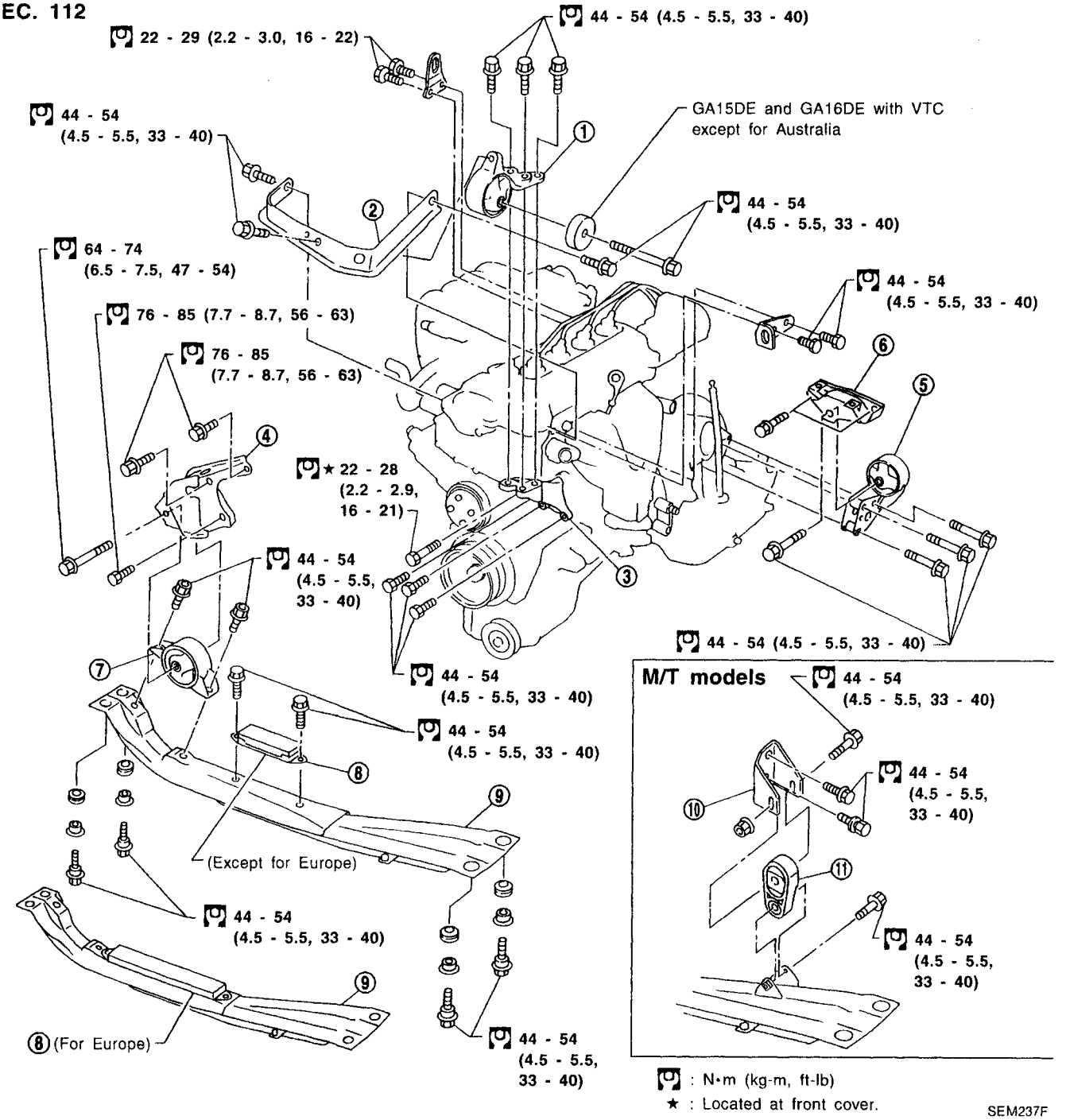

① Engine front mounting
② Cylinder head front mounting bracket
③ Engine front mounting bracket
④ Engine rear mounting bracket
⑤ Transaxle mounting
⑥ Transaxle mounting bracket
⑦ Engine rear mounting
⑧ Dynamic damper (A/T models)
⑨ Center member
⑩ Buffer rod bracket
⑪ Buffer rod

Simpo PDF Merge and Split Unregistered Version - http://www.simpopdf.com

WARNING:
a. Situate vehicle on a flat and solid surface.
b. Place chocks at front and back of rear wheels.
c. Do not remove engine until exhaust system has completely cooled off.
Otherwise, you may burn yourself and/or fire may break out in fuel line.
d. For safety during subsequent steps, the tension of wires should be slackened against the engine.
e. Before disconnecting fuel hose, release fuel pressure from fuel line.
Refer to "Releasing Fuel Pressure" in EC section.
f. Be sure to hoist engine and transaxle in a safe manner.
g. For engines not equipped with engine slingers, attach proper slingers and bolts described in PARTS CATALOG.

CAUTION:
- **When lifting engine, be sure to clear surrounding parts. Take special care for accelerator wire casing, brake lines and brake master cylinder.**
- **In hoisting the engine, always use engine slingers in a safe manner.**
- **In removing drive shaft, be careful not to damage grease seal of transaxle.**

Engine cannot be removed separately from transaxle. Remove engine with transaxle.

Removal

1. Drain water.
2. Remove hood.
3. Remove battery.
4. Remove reservoir tank and bracket.
5. Remove drive belts.
6. Remove alternator, compressor and power steering oil pump from engine.

Power steering pump does not need to be disconnected from power steering tubes.

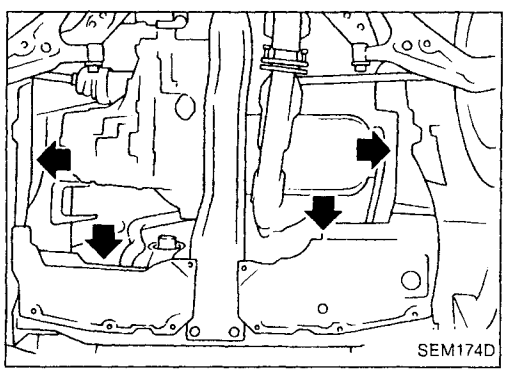
SEM174D

7. Remove the following parts:
- Right and left front tires
- Under covers
- Splash covers
- Brake caliper assembly

: 72 - 97 N·m (7.3 - 9.9 kg-m, 53 - 72 ft-lb)

Brake hose does not need to be disconnected from brake caliper assembly.
Never depress brake pedal.
- Disconnect tie-rod ball joint (RH & LH).

: 29 - 39 N·m (3.0 - 4.0 kg-m, 22 - 29 ft-lb)

- RH & LH drive shaft

When removing drive shaft, be careful not to damage transaxle side grease seal.

Simpo PDF Merge and Split Unregistered Version - http://www.simpopdf.com

Removal (Cont'd)

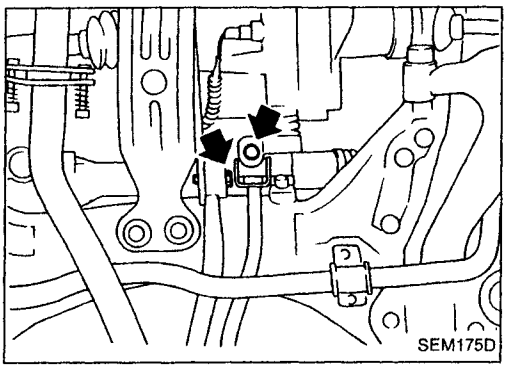

- Disconnect control rod and support rod from transaxle. (M/T models)
  Control rod:
  : 14 - 18 N·m (1.4 - 1.8 kg-m, 10 - 13 ft-lb)
  Support rod:
  : 35 - 47 N·m (3.6 - 4.8 kg-m, 26 - 35 ft-lb)
- Disconnect control cable from transaxle. (A/T models)

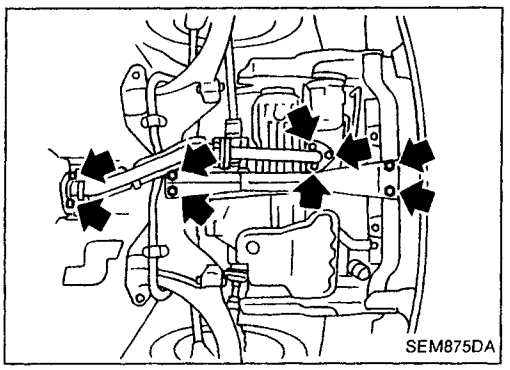

- Center member
- Front exhaust tube
- Stabilizer
- Cooling fan
- Radiator

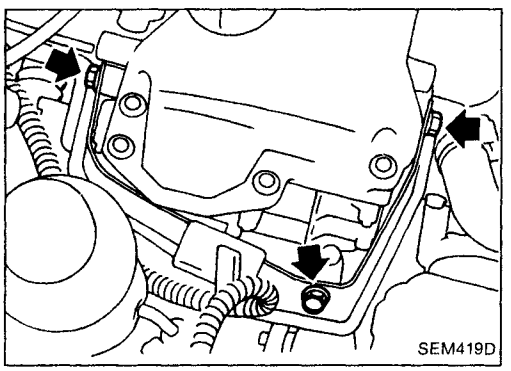

- Cylinder head front mounting bracket

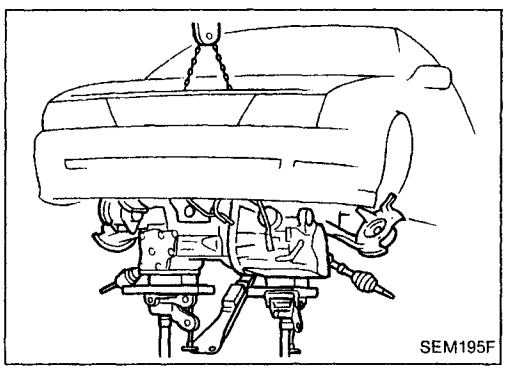

- Remove air duct and disconnect wires, harness, pipes, hoses and so on.

8. Lift up engine slightly and disconnect or remove all engine mountings.

When lifting engine, be careful not to hit it against adjacent parts, especially against brake tubes and brake master cylinder.

9. Remove engine with transaxle as shown.

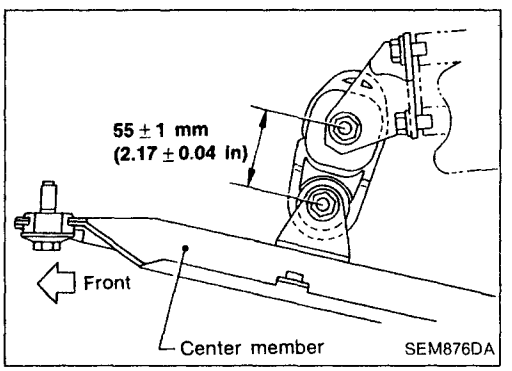

Installation

When installing the engine, adjust the height of buffer rod as shown. (For M/T)

- Installation is the reverse order of removal.

Simpo PDF Merge and Split Unregistered Version - http://www.simpopdf.com

SEC. 110·120

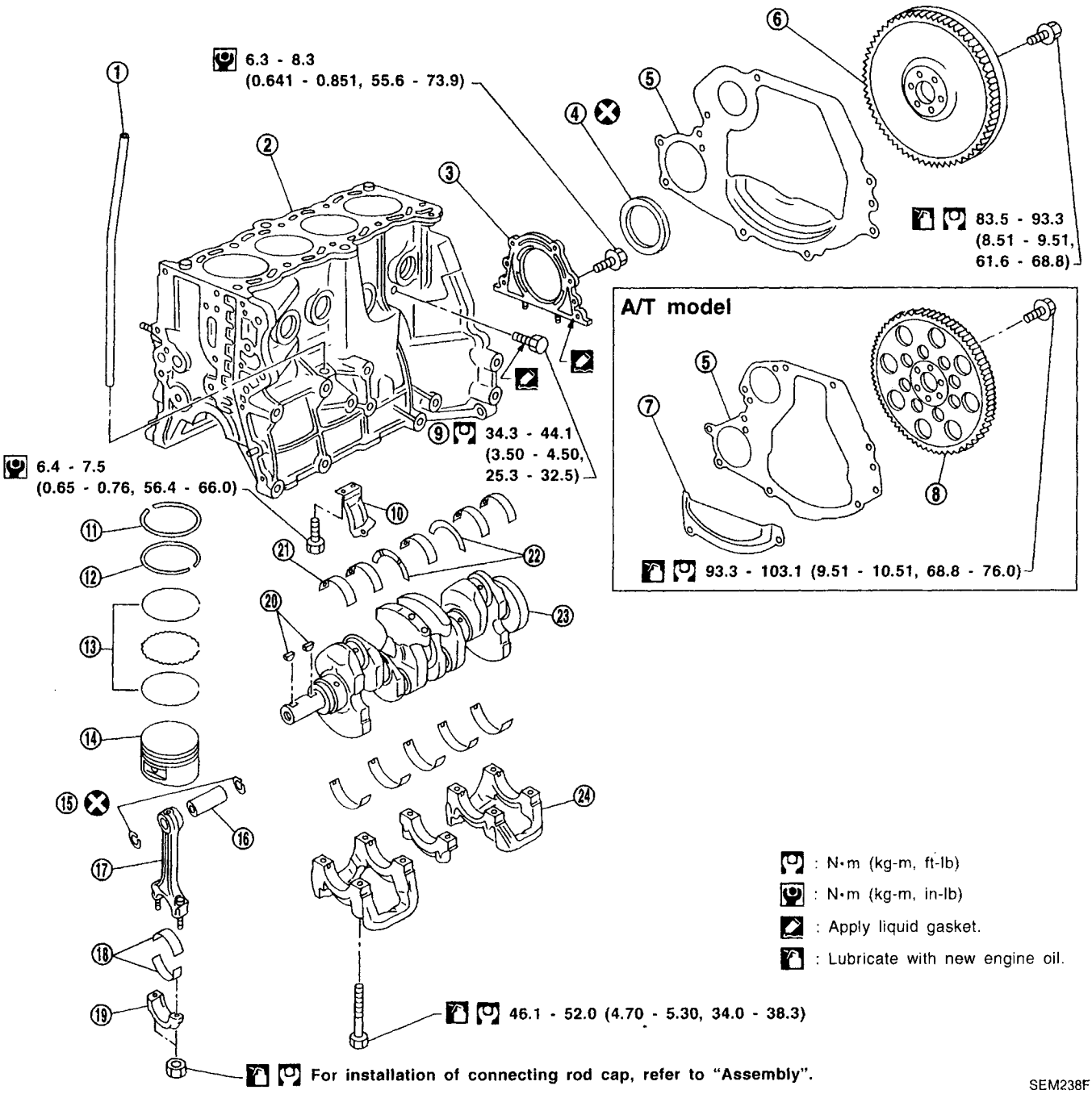

SEM238F

① Oil level gauge guide
② Cylinder block
③ Rear oil seal retainer
④ Rear oil seal
⑤ Rear plate
⑥ Flywheel
⑦ Rear lower plate
⑧ Drive plate
⑨ Drain plug
⑩ Buffer plate
⑪ Top ring
⑫ 2nd ring (Only Europe models*)
⑬ Oil ring
⑭ Piston
⑮ Snap ring
⑯ Piston pin
⑰ Connecting rod
⑱ Connecting rod bearing
⑲ Connecting rod cap
⑳ Key
㉑ Main bearing
㉒ Thrust bearing
㉓ Crankshaft
㉔ Main bearing cap

*: Applies to GA16DE without VTC, 14DE.

Simpo PDF Merge and Split Unregistered Version - http://www.simpopdf.com

CAUTION:
- **When installing sliding parts (bearings, pistons, etc.), lubricate contacting surfaces with new engine oil.**
- **Place removed parts such as bearings and bearing caps in their proper order and direction.**
- **When installing connecting rod nuts, and main bearing cap bolts, apply new engine oil to threads and seating surfaces.**

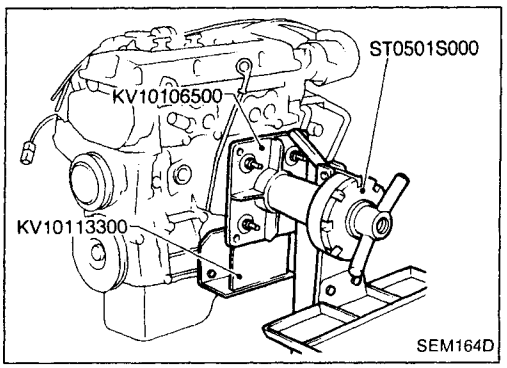

Disassembly

PISTON AND CRANKSHAFT

1. Place engine on a work stand.
2. Drain coolant and oil.
3. Remove timing chain.
   Refer to "Removal" in "TIMING CHAIN" (EM-20).

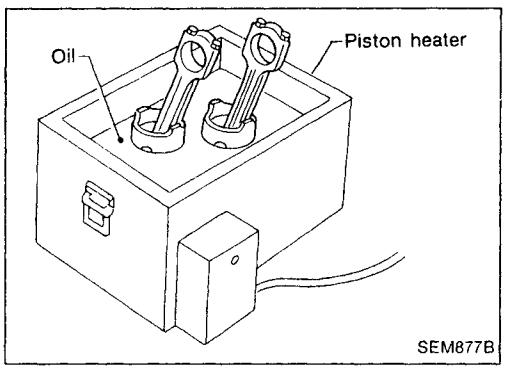

4. Remove pistons with connecting rods.
- When disassembling piston and connecting rod, remove snap ring first, then heat piston to 60 to 70°C (140 to 158°F) or use piston pin press stand at room temperature.

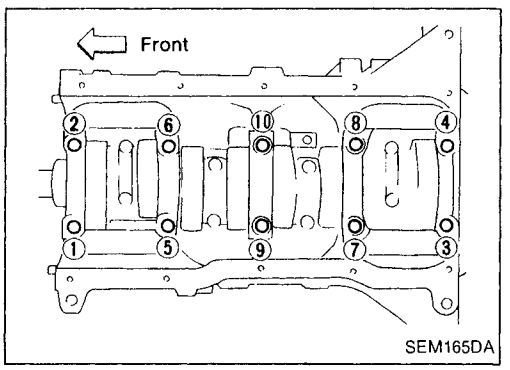

5. Loosen main bearing cap in numerical order as shown in the figure.
6. Remove bearing caps, main bearings and crankshaft.
- **Before removing bearing caps, measure crankshaft end play.**
- **Bolts should be loosened in two or three steps.**

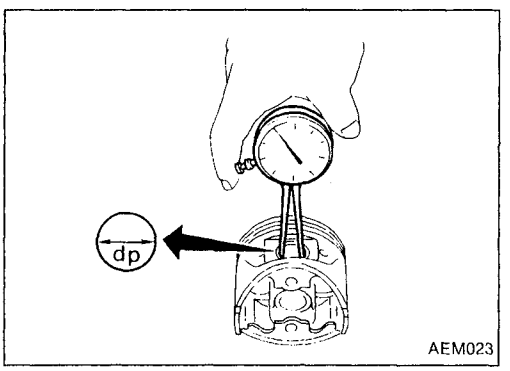

Inspection

PISTON AND PISTON PIN CLEARANCE

1. Measure inner diameter of piston pin hole "dp".
   Standard diameter "dp":
   18.987 - 18.999 mm (0.7475 - 0.7480 in)

Simpo PDF Merge and Split Unregistered Version - http://www.simpopdf.com

Inspection (Cont'd)

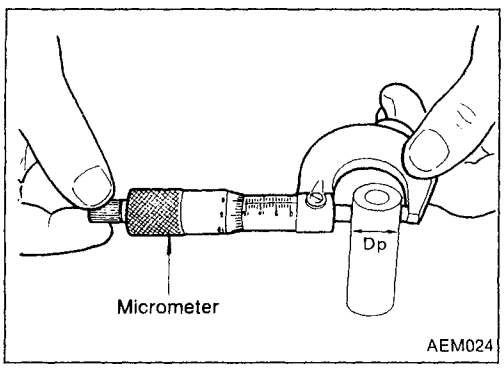

2. Measure outer diameter of piston pin "Dp".
   Standard diameter "Dp":
   18.989 - 19.001 mm (0.7476 - 0.7481 in)
3. Calculate piston pin clearance.
   dp – Dp = –0.004 to 0 mm (–0.0002 to 0 in)
   If it exceeds the above value, replace piston assembly with pin.

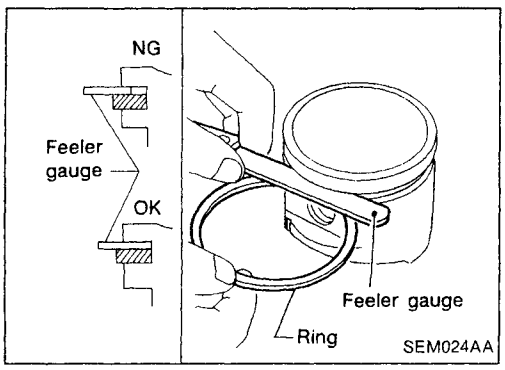

PISTON RING SIDE CLEARANCE

Side clearance:
Top ring
0.040 - 0.080 mm (0.0016 - 0.0031 in)
2nd ring (Only Europe models)
0.030 - 0.070 mm (0.0012 - 0.0028 in)
Max. limit of side clearance:
0.2 mm (0.008 in)

If out of specification, replace piston and/or piston ring assembly.

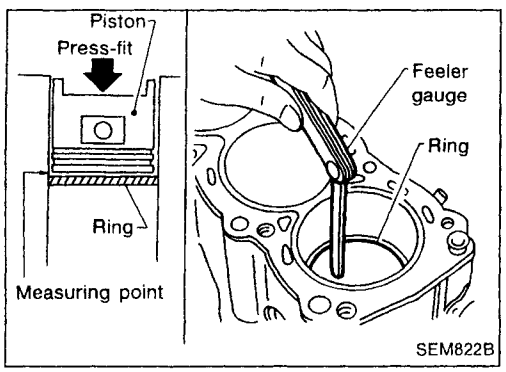

PISTON RING END GAP

End gap:
Top ring
0.20 - 0.35 mm (0.0079 - 0.0138 in)
2nd ring (Only Europe models)
0.37 - 0.52 mm (0.0146 - 0.0205 in)
Oil ring
0.20 - 0.60 mm (0.0079 - 0.0236 in)
Max. limit of ring gap:
1.0 mm (0.039 in)

If out of specification, replace piston ring. If gap exceeds maximum limit with new ring, rebore cylinder and use oversize piston and piston rings.
Refer to SDS (EM-161).

- When replacing the piston, check the cylinder block surface for scratches or seizure. If scratches or seizure is found, hone or replace the cylinder block.

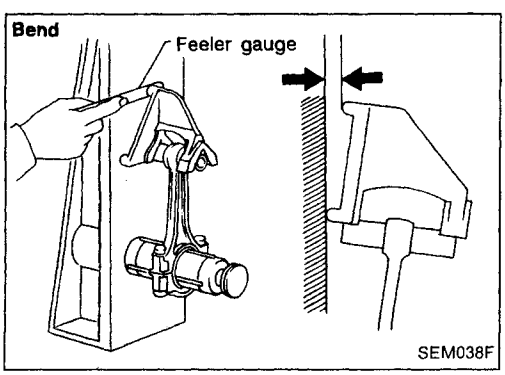

CONNECTING ROD BEND AND TORSION

Bend:
Limit 0.15 mm (0.0059 in)
per 100 mm (3.94 in) length
Torsion:
Limit 0.3 mm (0.012 in)
per 100 mm (3.94 in) length

If it exceeds the limit, replace connecting rod assembly.

Simpo PDF Merge and Split Unregistered Version - http://www.simpopdf.com

Inspection (Cont'd)

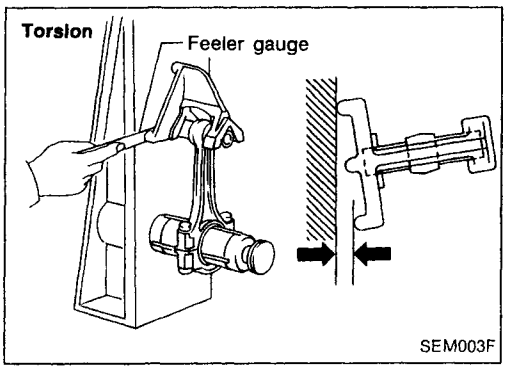

CYLINDER BLOCK DISTORTION AND WEAR

1. Clean upper face of cylinder block and measure the distortion.
   Limit:
   0.10 mm (0.0039 in)
2. If out of specification, resurface it.
   The resurfacing limit is determined by cylinder head resurfacing in engine.

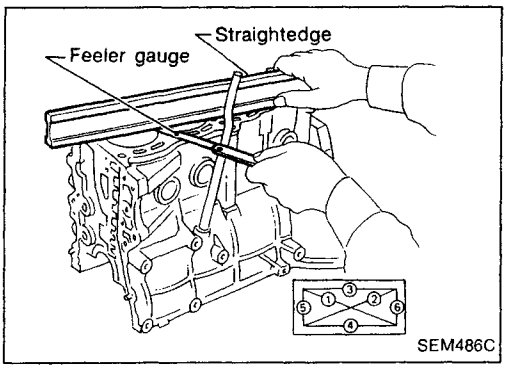

Amount of cylinder head resurfacing is "A".
Amount of cylinder block resurfacing is "B".
The maximum limit is as follows:
A + B = 0.2 mm (0.008 in)
Nominal cylinder block height from crankshaft center:
213.95 - 214.05 mm (8.4232 - 8.4271 in)

3. If necessary, replace cylinder block.

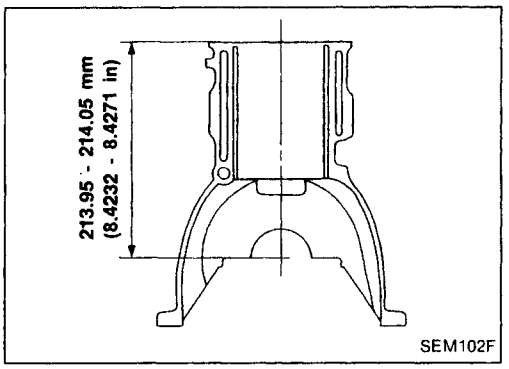

PISTON-TO-BORE CLEARANCE

1. Using a bore gauge, measure cylinder bore for wear, out-of-round and taper.
   Standard inner diameter:
   GA16DE 76.000 - 76.030 mm (2.9921 - 2.9933 in)
   GA14, 15DE 73.600 - 73.630 mm (2.8976 - 2.8988 in)
   Wear limit:
   0.2 mm (0.008 in)
   If it exceeds the limit, rebore all cylinders. Replace cylinder block if necessary.
   Out-of-round (X – Y) standard:
   0.015 mm (0.0006 in)
   Taper (A – B) standard:
   0.01 mm (0.0004 in)

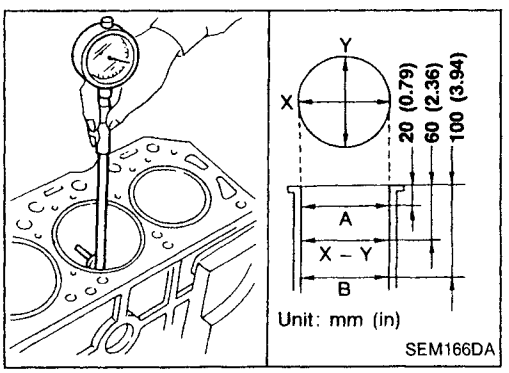

Simpo PDF Merge and Split Unregistered Version - http://www.simpopdf.com

Inspection (Cont'd)

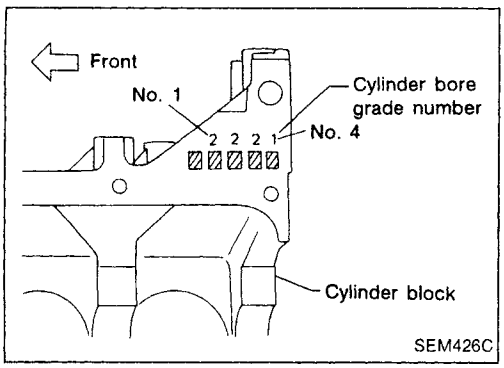

2. Check for scratches and seizure. If seizure is found, hone it.

- **If cylinder block or piston is replaced, match piston grade with grade number on cylinder block lower surface.**

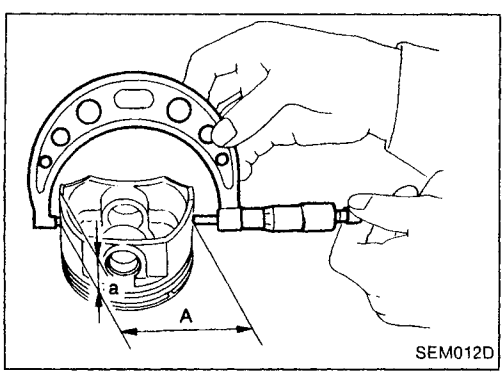

3. Measure piston skirt diameter.
   Piston diameter "A":
   Refer to SDS (EM-161).
   Measuring point "a" (Distance from the bottom):
   Refer to SDS (EM-161).
4. Check that piston-to-bore clearance is within specification.
   Piston-to-bore clearance "B":
   0.015 - 0.035 mm (0.0006 - 0.0014 in)
5. Determine piston oversize according to amount of cylinder wear.

Oversize pistons are available for service. Refer to SDS (EM-161).

6. Cylinder bore size is determined by adding piston-to-bore clearance to piston diameter "A".
   Rebored size calculation:
   D = A + B – C
   where,
   D: Bored diameter
   A: Piston diameter as measured
   B: Piston-to-bore clearance
   C: Honing allowance 0.02 mm (0.0008 in)
7. Install main bearing caps and tighten bolts to the specified torque. This will prevent distortion of cylinder bores.
8. Cut cylinder bores.

- **When any cylinder needs boring, all other cylinders must also be bored.**
- **Do not cut too much out of cylinder bore at a time. Cut only 0.05 mm (0.0020 in) or so in diameter at a time.**

9. Hone cylinders to obtain specified piston-to-bore clearance.
10. Measure finished cylinder bore for out-of-round and taper.

- **Measurement should be done after cylinder bore cools down.**

Simpo PDF Merge and Split Unregistered Version - http://www.simpopdf.com

Inspection (Cont'd)

CRANKSHAFT

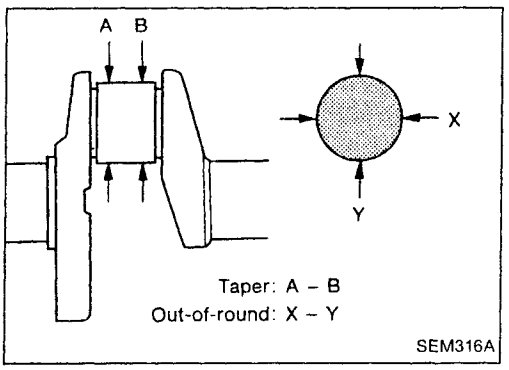

1. Check crankshaft main and pin journals for score, wear or cracks.
2. With a micrometer, measure journals for taper and out-of-round.
   Out-of-round (X – Y):
   Less than 0.005 mm (0.0002 in)
   Taper (A – B):
   Less than 0.002 mm (0.0001 in)

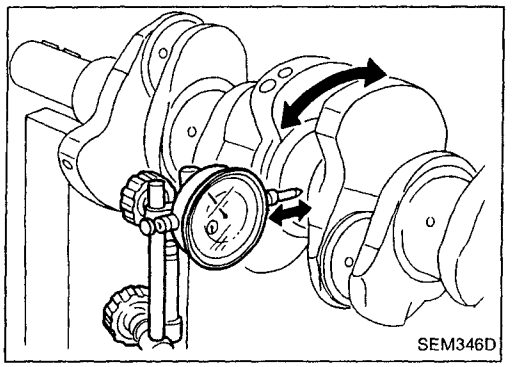

3. Measure crankshaft runout.
   Runout (Total indicator reading):
   Less than 0.05 mm (0.0020 in)

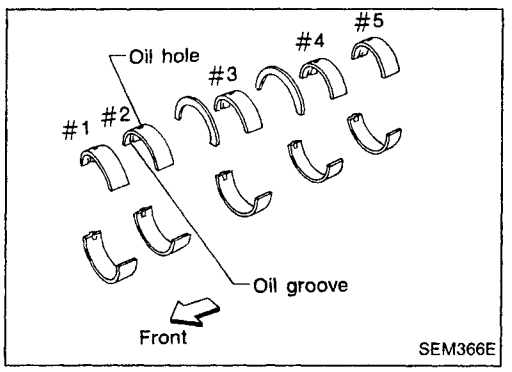

BEARING CLEARANCE

- Use Method A or Method B. Method A is preferred because it is more accurate.

Method A (Using bore gauge & micrometer)

Main bearing

1. Set main bearings in their proper positions on cylinder block and main bearing cap.

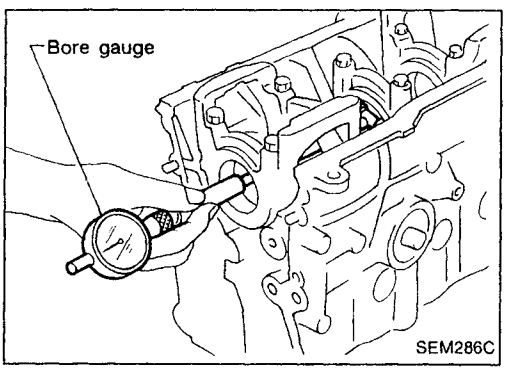

2. Install main bearing cap to cylinder block.
   Tighten all bolts in correct order in two or three stages.
3. Measure inner diameter "A" of each main bearing.

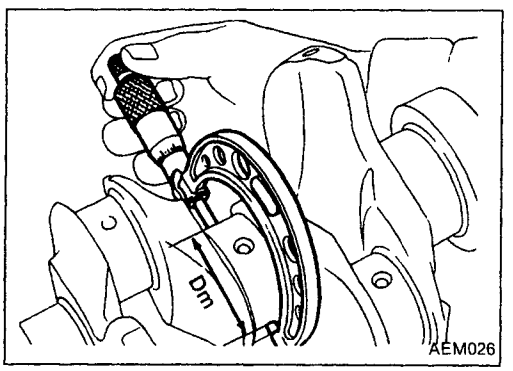

4. Measure outer diameter "Dm" of each main journal in crankshaft.
5. Calculate main bearing clearance.
   Main bearing clearance = A – Dm
   Standard:
   0.018 - 0.042 mm (0.0007 - 0.0017 in)
   Limit: 0.1 mm (0.004 in)
6. If it exceeds the limit, replace bearing.
7. If clearance cannot be adjusted within the standard of any bearing, grind crankshaft journal and use undersized bearing.

Simpo PDF Merge and Split Unregistered Version - http://www.simpopdf.com

Inspection (Cont'd)

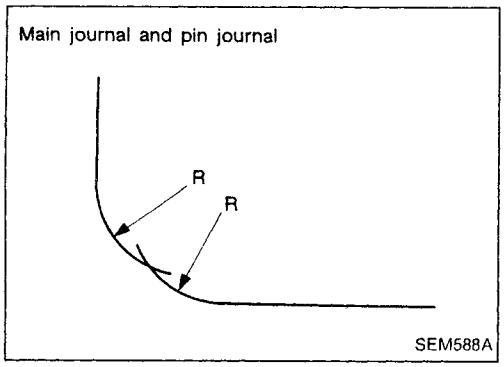

When grinding crank pin and crank journal:

a. Grind until clearance is within specified standard bearing clearance.

b. Fillets should be finished as shown in the figure.
R: 2.3 - 2.5 mm (0.091 - 0.098 in)

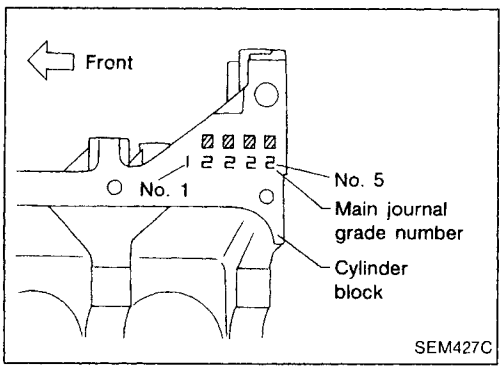

8. If crankshaft, cylinder block or main bearing is reused again, measure main bearing clearance. If the above parts are all replaced, select thickness of main bearings as follows:

a. Grade number of each cylinder block main journal is punched on the respective cylinder block. These numbers are punched in either Arabic or Roman numerals.

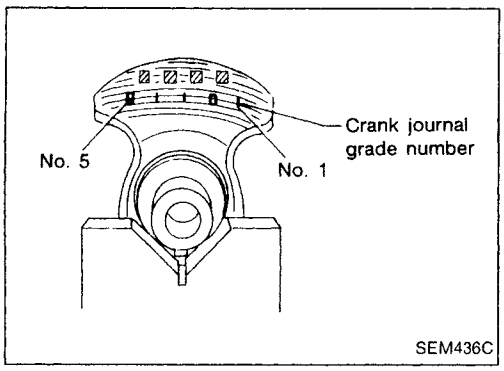

b. Grade number of each crankshaft main journal is punched on the respective crankshaft. These numbers are punched in either Arabic or Roman numerals.

c. Select main bearing with suitable thickness according to the following table.

Main bearing grade color:

Crankshaft journal grade number \ Main journal grade number	0	1	2
0	Black	Brown	Green
1	Brown	Green	Yellow
2	Green	Yellow	Blue

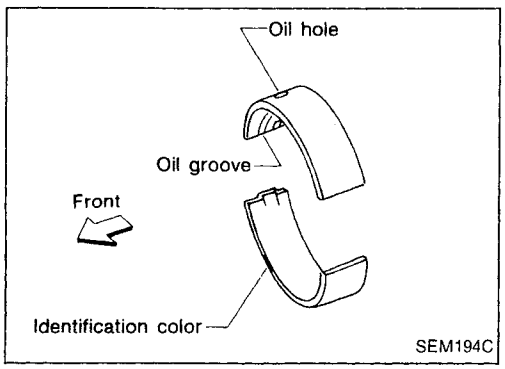

For example:
Main journal grade number: 1
Crankshaft journal grade number: 2
Main bearing grade number = 1 + 2 = Yellow

Connecting rod bearing (Big end)

1. Install connecting rod bearing to connecting rod and cap.
2. Install connecting rod cap to connecting rod.

Tighten bolts to the specified torque.

3. Measure inner diameter "C" of each bearing.

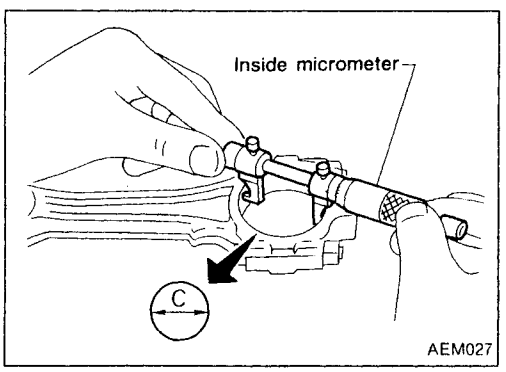

Simpo PDF Merge and Split Unregistered Version - http://www.simpopdf.com

Inspection (Cont'd)

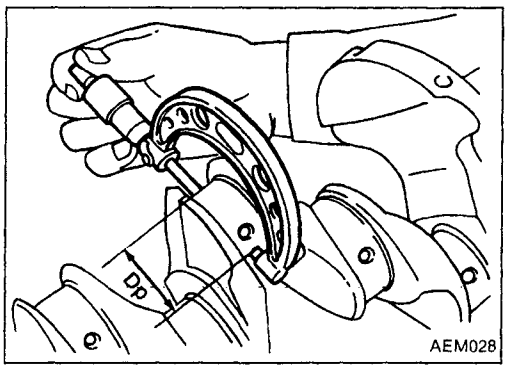

4. Measure outer diameter "Dp" of each crankshaft pin journal.
5. Calculate connecting rod bearing clearance.
   Connecting rod bearing clearance = C – Dp
   Standard:
   0.014 - 0.039 mm (0.0006 - 0.0015 in)
   Limit: 0.1 mm (0.004 in)
6. If it exceeds the limit, replace bearing.
7. If clearance cannot be adjusted within the standard of any bearing, grind crankshaft journal and use undersized bearing. Refer to step 7 of "BEARING CLEARANCE — Main bearing" (EM-52).

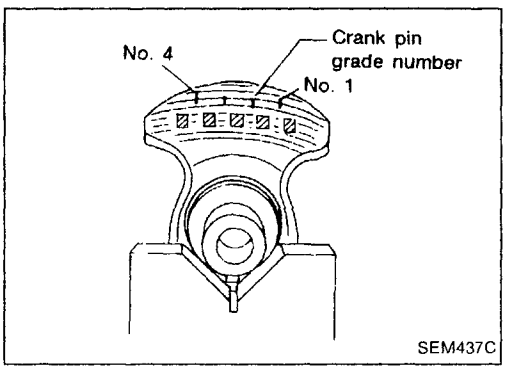

8. If bearing, crankshaft or connecting rod is replaced with a new one, select connecting rod bearing according to the following table.

Connecting rod bearing grade number:

Grade numbers are punched in either Arabic or Roman numerals.

Crank pin grade color	Connecting rod bearing grade color
0	—
1	Brown
2	Green

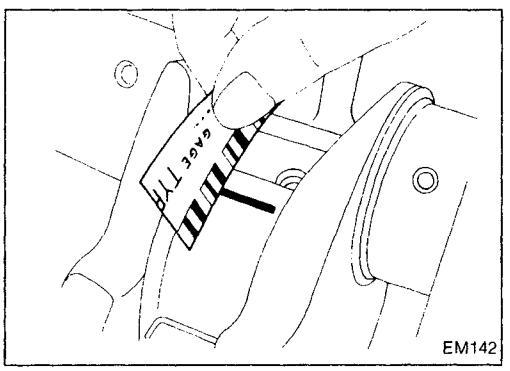

Method B (Using plastigage)

CAUTION:

- **Do not turn crankshaft or connecting rod while plastigage is being inserted.**
- **When bearing clearance exceeds the specified limit, ensure that the proper bearing has been installed. Then if excessive bearing clearance exists, use a thicker main bearing or undersized bearing so that the specified bearing clearance is obtained.**

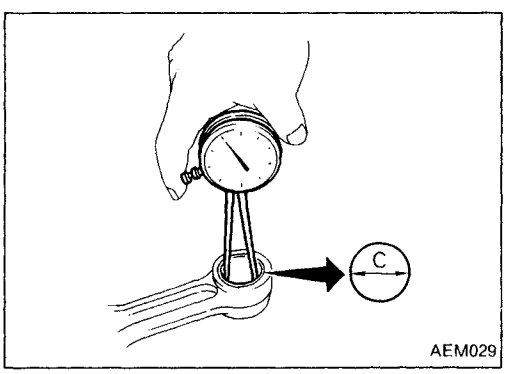

CONNECTING ROD BUSHING CLEARANCE (Small end)

1. Measure inner diameter "C" of bushing.

Simpo PDF Merge and Split Unregistered Version - http://www.simpopdf.com

Inspection (Cont'd)

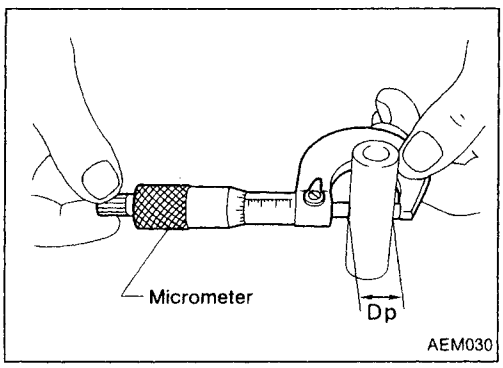

2. Measure outer diameter "Dp" of piston pin.
3. Calculate connecting rod bushing clearance.

Connecting rod bushing clearance = C – Dp

Standard:

0.005 - 0.017 mm (0.0002 - 0.0007 in)

Limit:

0.023 mm (0.0009 in)

If it exceeds the limit, replace connecting rod assembly or connecting rod bushing and/or piston pin.

EM

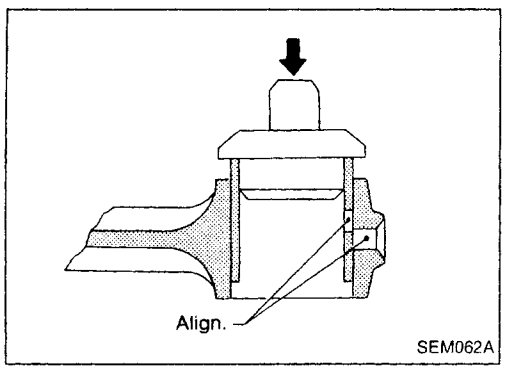

REPLACEMENT OF CONNECTING ROD BUSHING (Small end)

1. Drive in small end bushing until it is flush with end surface of rod.

Be sure to align the oil holes.

2. Ream the bushing so that clearance with piston pin is within specification.

Clearance between connecting rod bushing and piston pin:

0.005 - 0.017 mm (0.0002 - 0.0007 in)

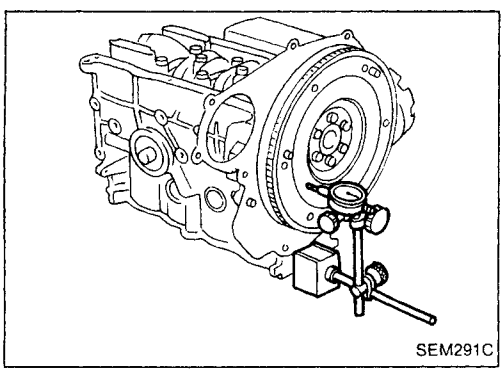

FLYWHEEL RUNOUT

Runout (Total indicator reading):

Flywheel (M/T model)

Less than 0.15 mm (0.0059 in)

Drive plate (A/T model)*

Less than 0.2 mm (0.008 in)

***: Measuring points**

Approximately 115 mm (4.53 in) from crankshaft center

Assembly

PISTON

1. Install new snap ring on one side of piston pin hole.

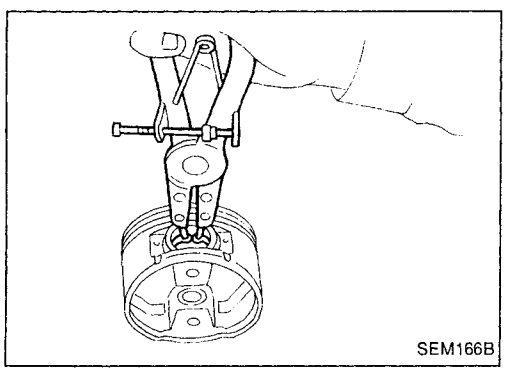

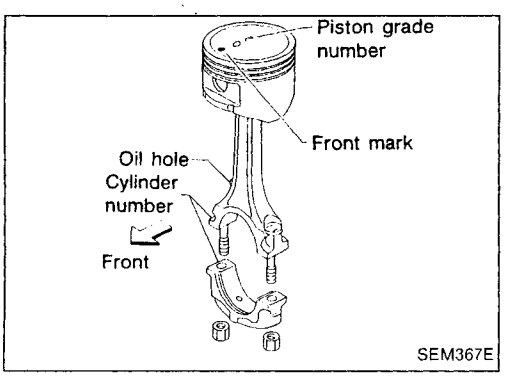

2. Heat piston to 60 to 70°C (140 to 158°F) and assemble piston, piston pin, connecting rod and new snap ring.

- **Align the direction of piston and connecting rod.**
- **Numbers stamped on connecting rod and cap correspond to each cylinder.**
- **After assembly, make sure connecting rod swings smoothly.**

Simpo PDF Merge and Split Unregistered Version - http://www.simpopdf.com

Assembly (Cont'd)

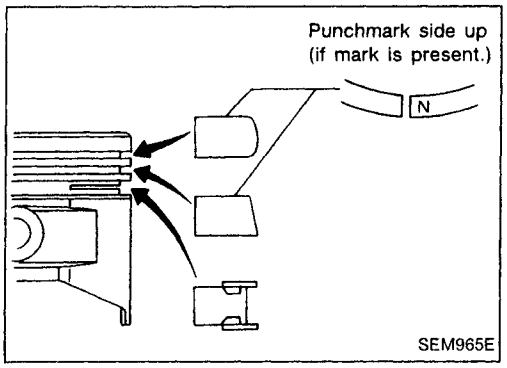

3. Set piston rings as shown.

CAUTION:

- **When piston rings are not replaced, make sure that piston rings are mounted in their original position.**
- **When piston rings are being replaced and no punch mark is present, piston rings can be mounted with either side up.**

For Europe and Israel models

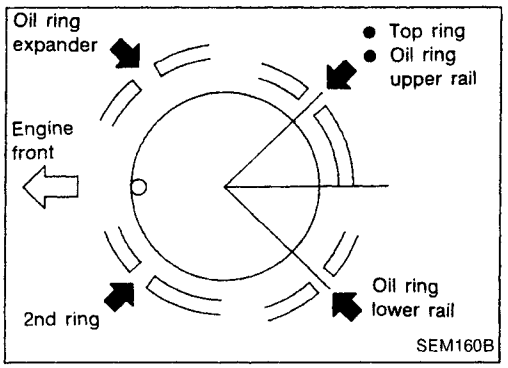

Except for Europe and Israel models

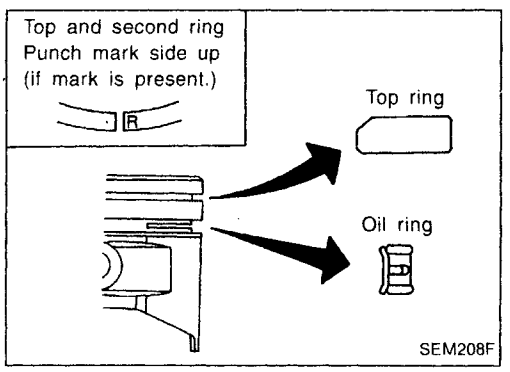

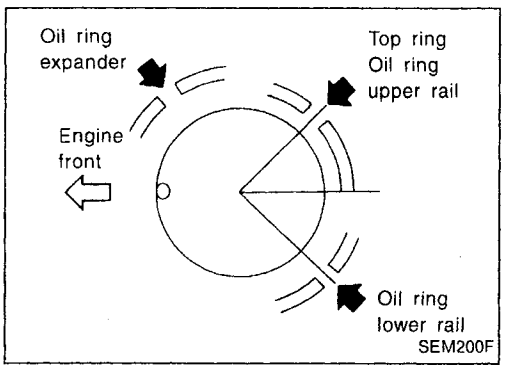

CRANKSHAFT

1. Set main bearings in their proper positions on cylinder block and main bearing cap.

- **Confirm that correct main bearings are used. Refer to "Inspection" (EM-52).**
- **Apply engine oil to bearing surfaces.**

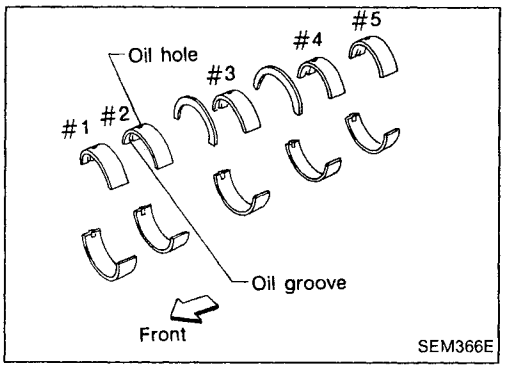

Simpo PDF Merge and Split Unregistered Version - http://www.simpopdf.com

Assembly (Cont'd)

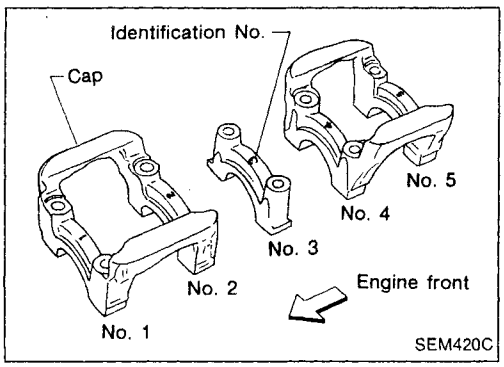

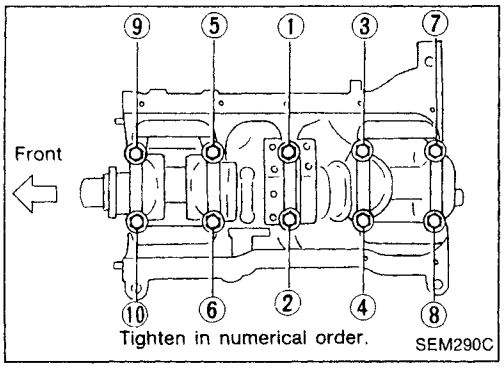

2. Install crankshaft and main bearing caps and tighten bolts to the specified torque.

- **Apply new engine oil to bolt threads and seat surface.**
- **Prior to tightening bearing cap bolts, place bearing cap in its proper position by shifting crankshaft in the axial direction.**
- **Tighten bearing cap bolts gradually in two or three stages. Start with center bearing and move outward sequentially.**
- **After securing bearing cap bolts, make sure crankshaft turns smoothly by hand.**

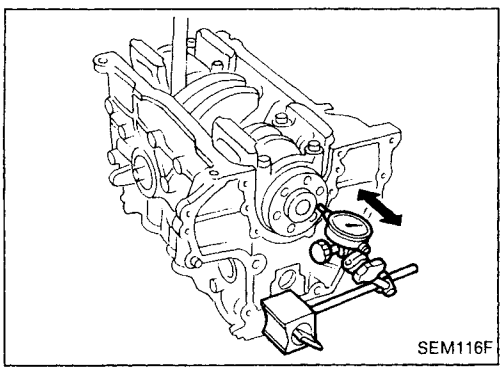

3. Measure crankshaft end play.

Crankshaft end play:
Standard:
0.060 - 0.180 mm (0.0024 - 0.0071 in)
Limit:
0.3 mm (0.012 in)
If beyond the limit, replace thrust bearing with a new one.

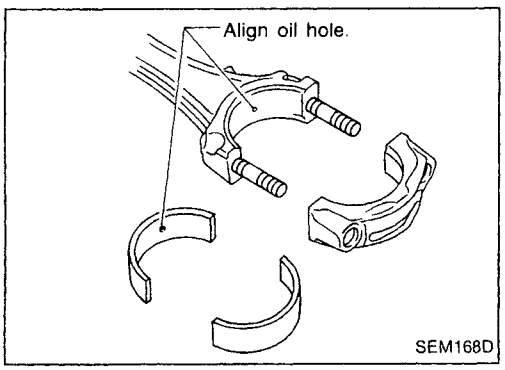

4. Install connecting rod bearings in connecting rods and connecting rod caps.

- **Confirm that correct bearings are used. Refer to "Inspection" (EM-52).**
- **Install bearings so that oil hole in connecting rod aligns with oil hole of bearing.**
- **Apply engine oil to bolt threads and bearing surfaces.**

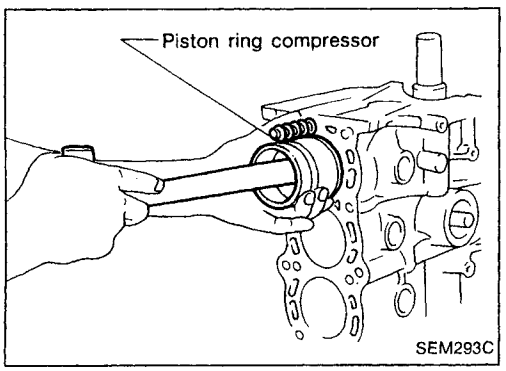

5. Install pistons with connecting rods.

a. Install them into corresponding cylinders with Tool.

- **Be careful not to scratch cylinder wall by connecting rod.**
- **Arrange so that front mark on piston head faces toward front of engine.**
- **Apply engine oil to piston rings and sliding surface of piston.**

Simpo PDF Merge and Split Unregistered Version - http://www.simpopdf.com

Assembly (Cont'd)

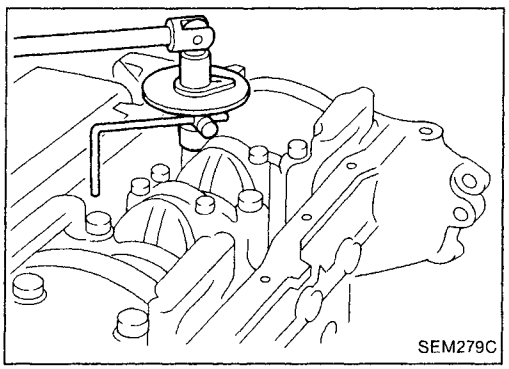
SEM279C

b. Install connecting rod caps.
Tighten connecting rod cap nuts to the specified torque.

: Connecting rod cap nuts

(1) Tighten to 13.72 to 15.68 N·m (1.399 to 1.599 kg-m, 10.120 to 11.566 ft-lb).

(2) Turn nuts to 35° to 40° degrees clockwise with an angle wrench. If an angle wrench is not available tighten nuts to 23 to 28 N·m (2.3 to 2.9 kg-m, 17 to 21 ft-lb).

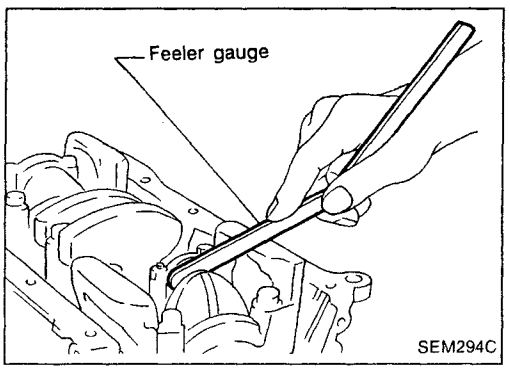

SEM294C

6. Measure connecting rod side clearance.

Connecting rod side clearance:

Standard:

0.200 - 0.470 mm (0.0079 - 0.0185 in)

Limit:

0.52 mm (0.0205 in)

If beyond the limit, replace connecting rod and/or crankshaft.

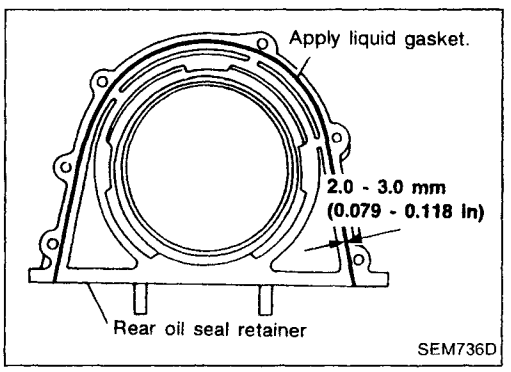

SEM736D

7. Install rear oil seal retainer.

a. Before installing rear oil seal retainer, remove all traces of liquid gasket from cylinder block and retainer with a scraper.

b. Apply a continuous bead of liquid gasket to rear oil seal retainer.

- Apply around inner side of bolt holes.

Simpo PDF Merge and Split Unregistered Version - http://www.simpopdf.com

SEC. 130•140•150•210•211•221

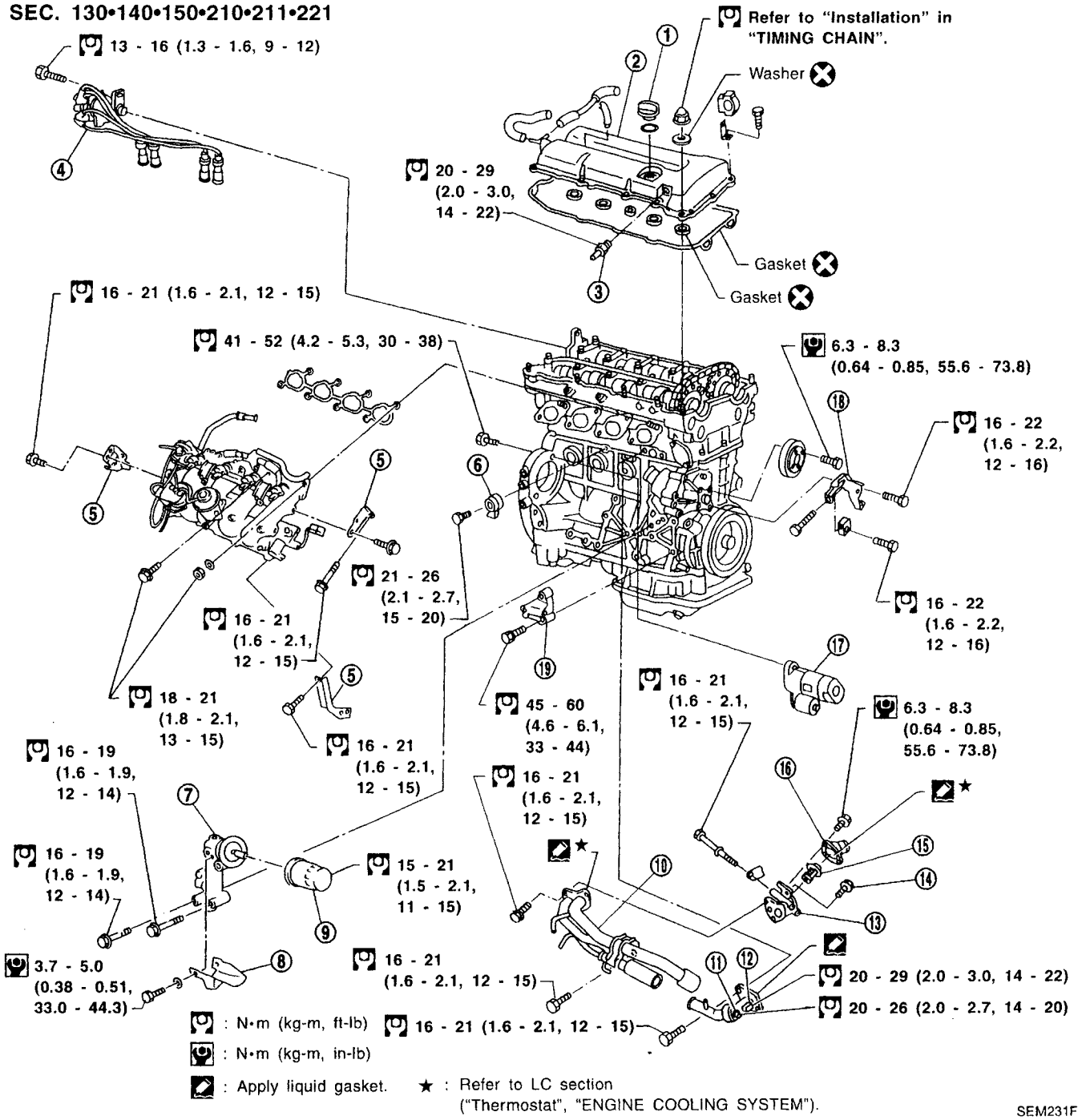

① Oil filler cap
② Rocker cover
③ PCV valve
④ Camshaft position sensor, ignition coil and power transistor built into distributor
⑤ Intake manifold supports
⑥ Knock sensor
⑦ Oil filter bracket
⑧ Oil catcher
⑨ Oil filter
⑩ Water pipe assembly
⑪ Thermal transmitter
⑫ Engine coolant temperature sensor
⑬ Thermostat housing
⑭ Air relief plug
⑮ Thermostat
⑯ Water inlet
⑰ Starter motor
⑱ Power steering oil pump adjusting bar
⑲ Power steering oil pump bracket

Simpo PDF Merge and Split Unregistered Version - http://www.simpopdf.com

SEC. 140•147•163•164

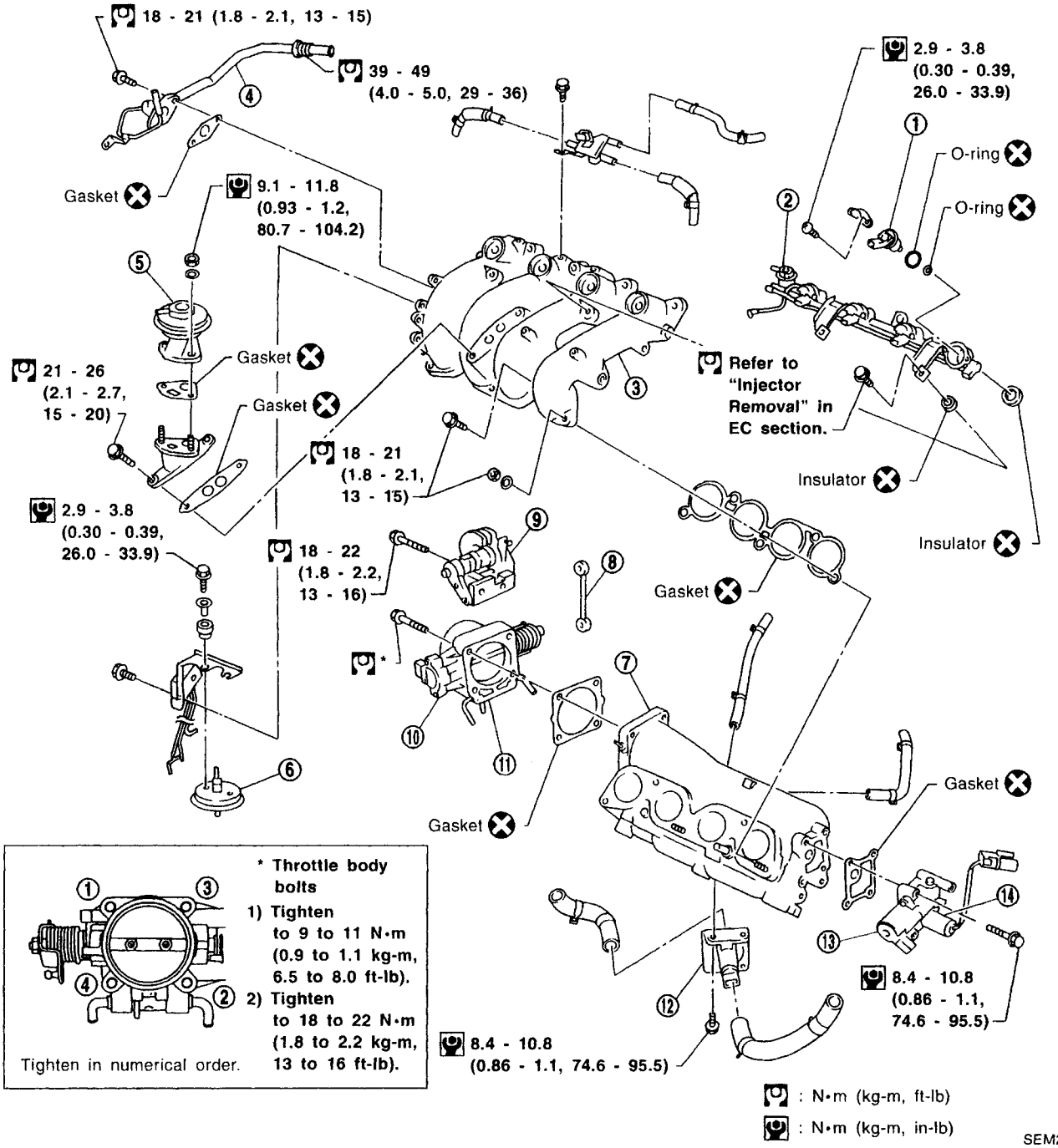

① Injector
② Pressure regulator
③ Intake manifold
④ EGR tube
⑤ EGR valve
⑥ EGRC-BPT valve
⑦ Intake manifold collector
⑧ Rod
⑨ Accel-drum unit
⑩ Throttle position sensor
⑪ Throttle body
⑫ IACV-air regulator
⑬ IACV-AAC valve
⑭ IACV-FICD solenoid valve

Simpo PDF Merge and Split Unregistered Version - http://www.simpopdf.com

SEC. 118•140•230•275

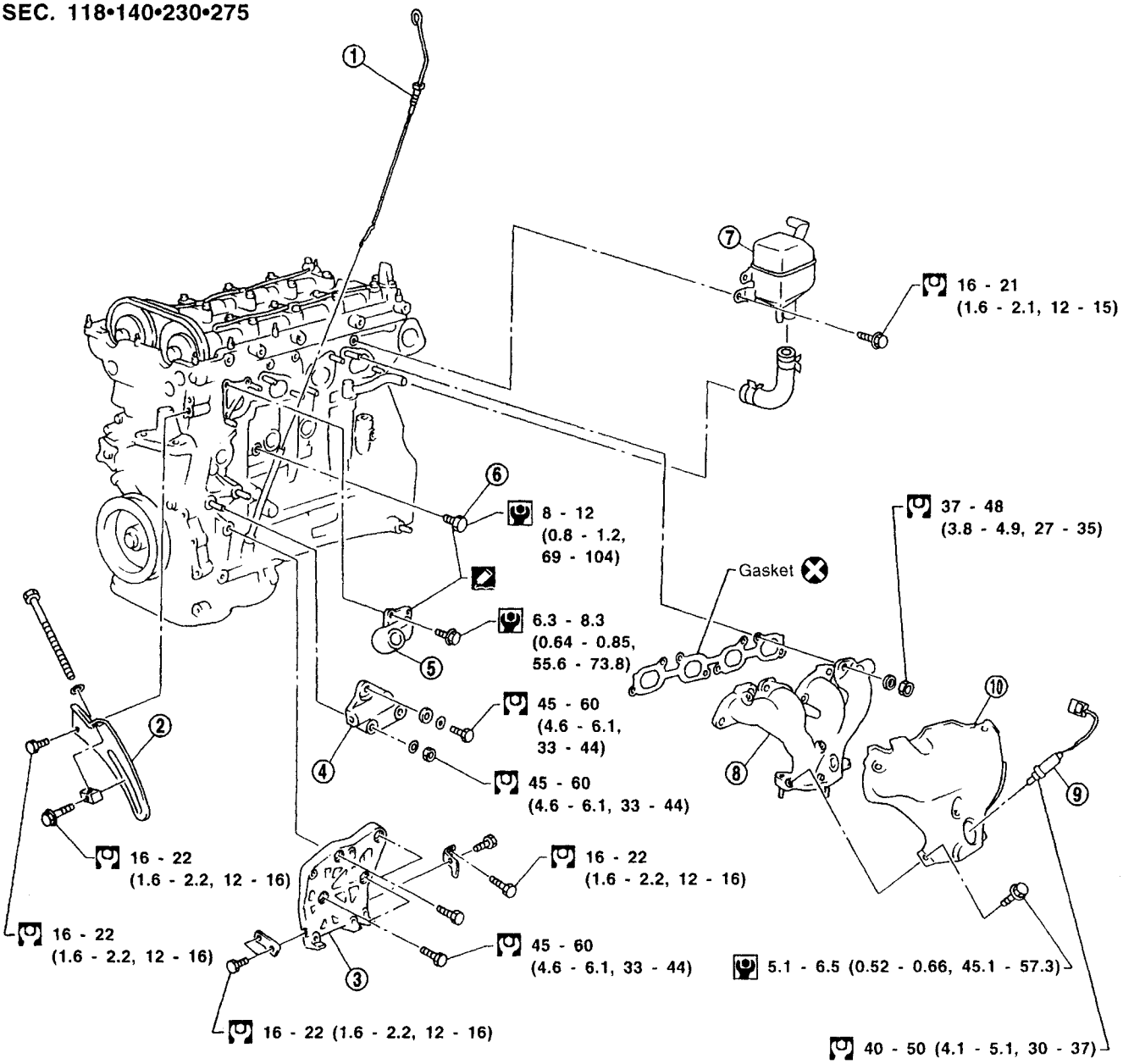

: N•m (kg-m, in-lb)
: N•m (kg-m, ft-lb)
: Apply liquid gasket.

SEM233F

① Oil level gauge
② Alternator adjusting bar
③ Compressor bracket
④ Alternator bracket
⑤ Water outlet
⑥ Drain plug
⑦ Crankcase ventilation oil separator
⑧ Exhaust manifold
⑨ Heated oxygen sensor
⑩ Exhaust manifold cover

Simpo PDF Merge and Split Unregistered Version - http://www.simpopdf.com

Measurement of Compression Pressure

1. Warm up engine.
2. Turn ignition switch off.
3. Release fuel pressure.
   Refer to "Releasing Fuel Pressure" in EC section.
4. Remove all spark plugs.
5. Disconnect distributor coil connector.

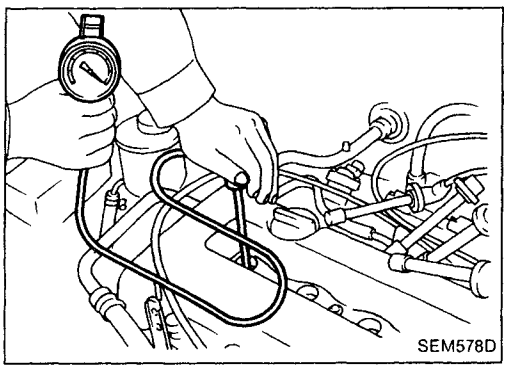
SEM578D

6. Attach a compression tester to No. 1 cylinder.
7. Depress accelerator pedal fully to keep throttle valve wide open.
8. Crank engine and record highest gauge indication.
9. Repeat the measurement on each cylinder as shown above.

- **Always use a fully-charged battery to obtain specified engine speed.**

Compression pressure: kPa (bar, kg/cm^2, psi)/300 rpm

Standard

1,226 (12.26, 12.5, 178)

Minimum

1,030 (10.30, 10.5, 149)

Difference limit between cylinders

98 (0.98, 1.0, 14)


20 mm (0.79 in) dia.

Use compressor tester whose end (rubber portion) is less than 20 mm (0.79 in) dia. Otherwise, it may be caught by cylinder head during removal.

SEM387C

10. If compression in one or more cylinders is low:

a. Pour a small amount of engine oil into cylinders through spark plug holes.
b. Retest compression.

- **If adding oil helps compression, piston rings may be worn or damaged. If so, replace piston rings after checking piston.**
- **If pressure stays low, a valve may be sticking or seating improperly. Inspect and repair valve and valve seat. Refer to SDS. If valve or valve seat is damaged excessively, replace them.**
- **There is leakage past the gasket surface if the following is observed. Compression in two adjacent cylinders is low and adding oil does not improve compression. If so, replace cylinder head gasket.**

Simpo PDF Merge and Split Unregistered Version - http://www.simpopdf.com

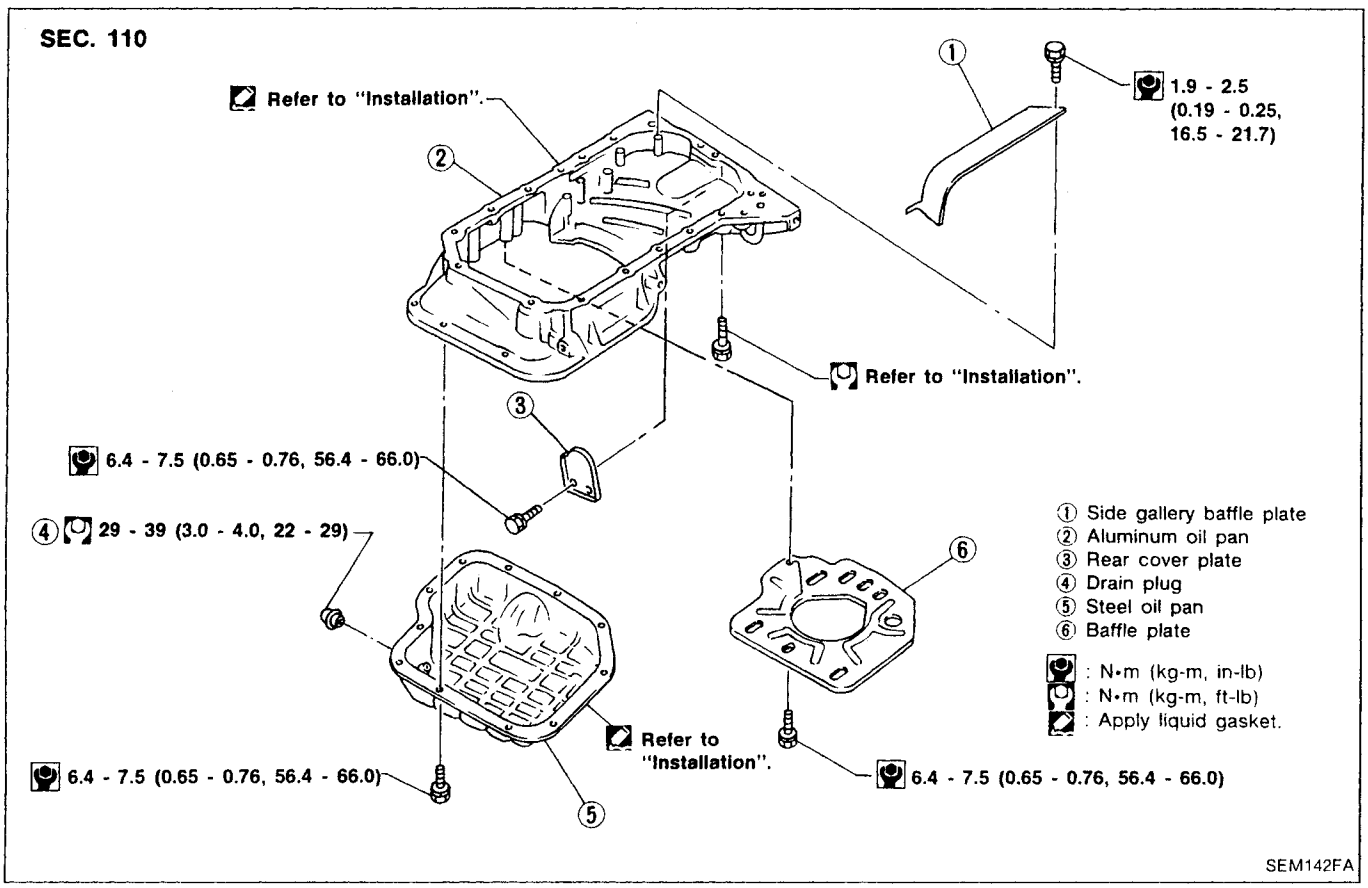

Removal

1. Remove engine under cover.
2. Drain engine oil.

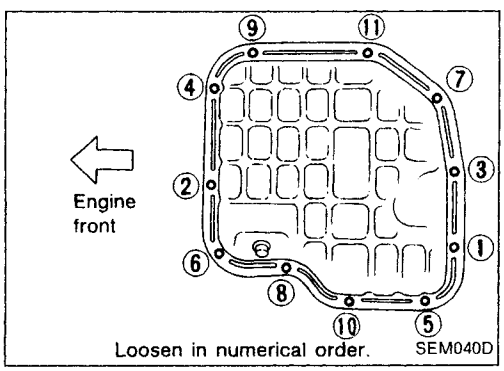

3. Remove steel oil pan bolts.

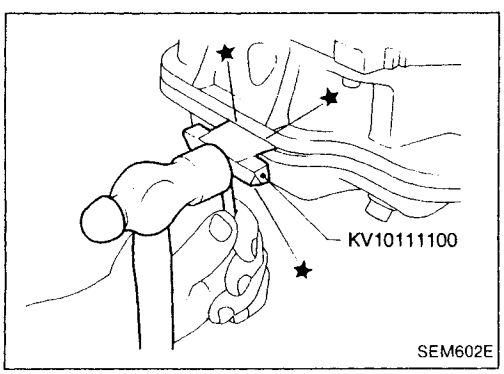

4. Remove steel oil pan.

a. Insert Tool between aluminum oil pan and steel oil pan.

- **Be careful not to damage aluminum mating surface.**
- **Do not insert screwdriver, or oil pan flange will be deformed.**

Simpo PDF Merge and Split Unregistered Version - http://www.simpopdf.com

Removal (Cont'd)

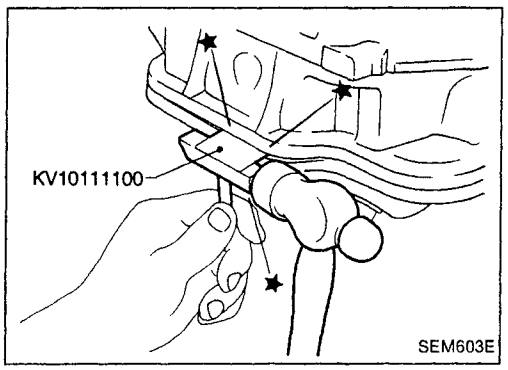

b. Slide Tool by tapping on the side of the Tool with a hammer.
c. Remove steel oil pan.

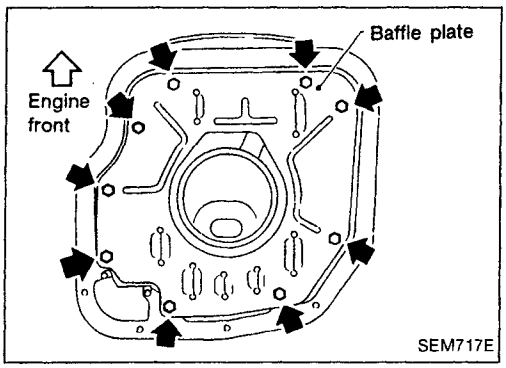

d. Remove baffle plate.

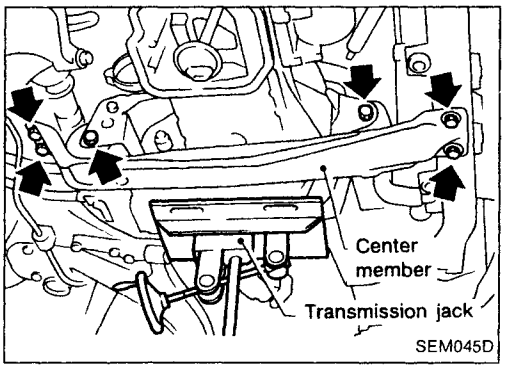

5. Remove front tube.
6. Set a suitable transmission jack under transaxle and hoist engine with engine slinger.
7. Remove center member.
8. Remove A/T shift control cable. (A/T only)

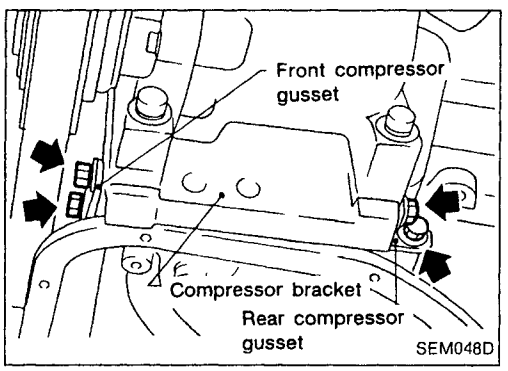

9. Remove compressor gussets.

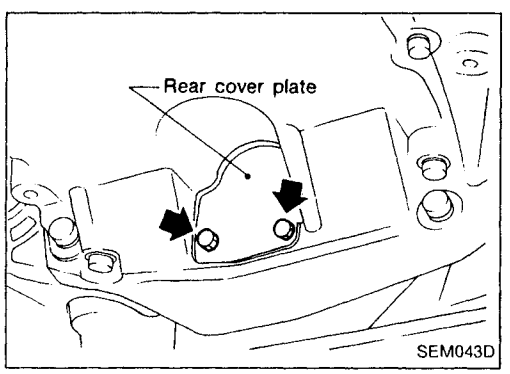

10. Remove rear cover plate.

Simpo PDF Merge and Split Unregistered Version - http://www.simpopdf.com

Removal (Cont'd)

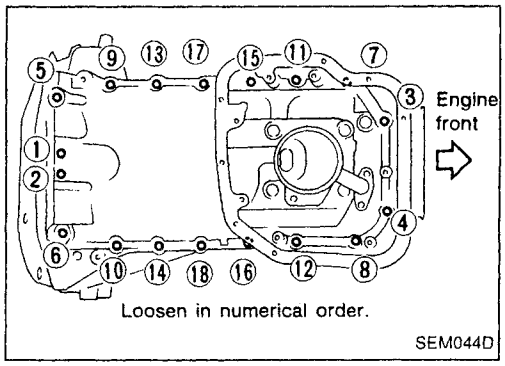

11. Remove aluminum oil pan bolts.

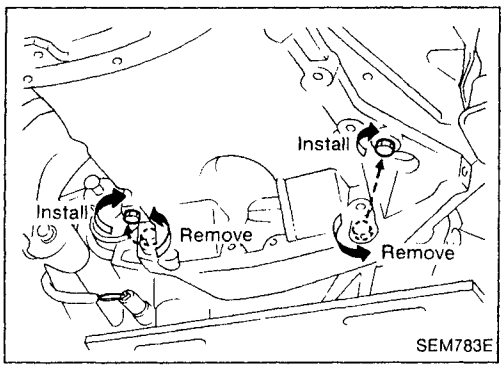

12. Remove the two engine-to-transaxle bolts and install them into open bolt holes shown. Tighten the bolts to release aluminum oil pan from cylinder block.

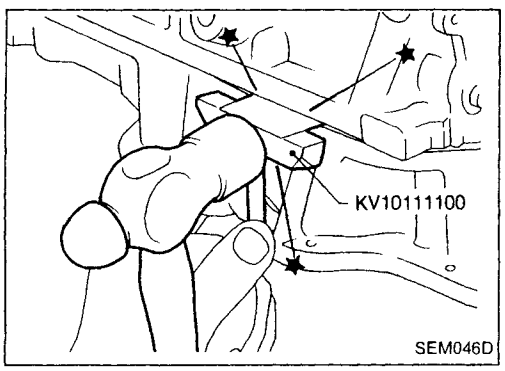

13. Remove aluminum oil pan.
a. Insert Tool between cylinder block and aluminum oil pan.
- **Be careful not to damage aluminum mating surface.**
- **Do not insert screwdriver, or oil pan flange will be damaged.**

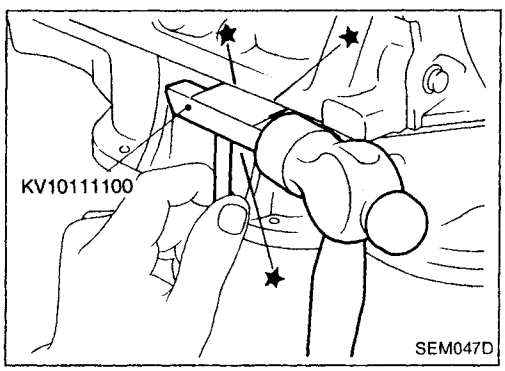

b. Slide Tool by tapping on the side of the Tool with a hammer.

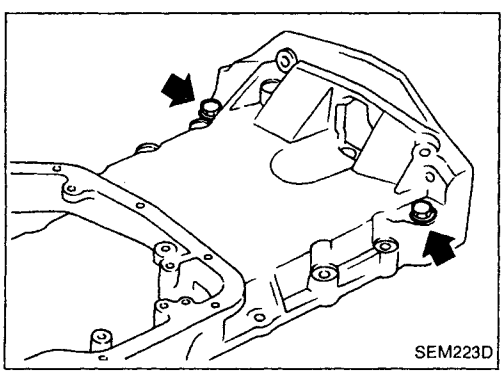

14. Remove the two engine-to-transaxle bolts previously installed in aluminum oil pan.

Simpo PDF Merge and Split Unregistered Version - http://www.simpopdf.com

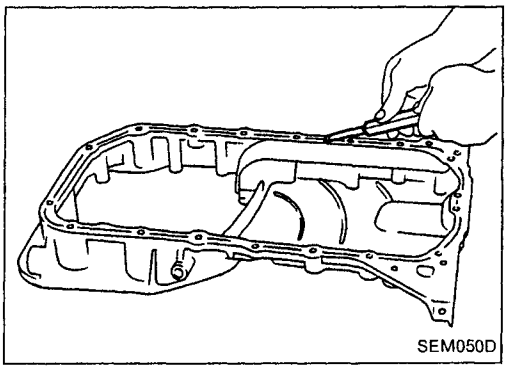
SEM050D

Installation

1. Install aluminum oil pan.

a. Use a scraper to remove all traces of liquid gasket from mating surfaces.

- Also remove traces of liquid gasket from mating surface of cylinder block and front cover.

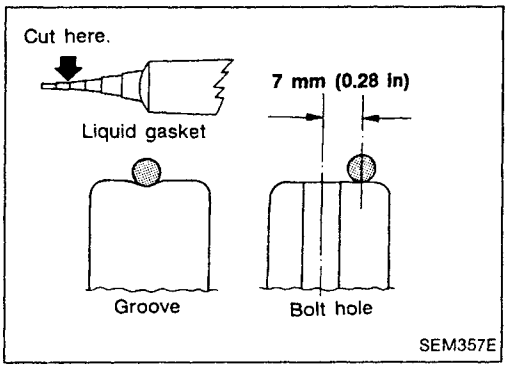

SEM357E

b. Apply a continuous bead of liquid gasket to mating surface of aluminum oil pan.

- **Use Genuine Liquid Gasket or equivalent.**
- **Be sure liquid gasket diameter is 4.0 to 5.0 mm (0.157 to 0.197 in).**
- **Attaching should be done within 5 minutes after coating.**

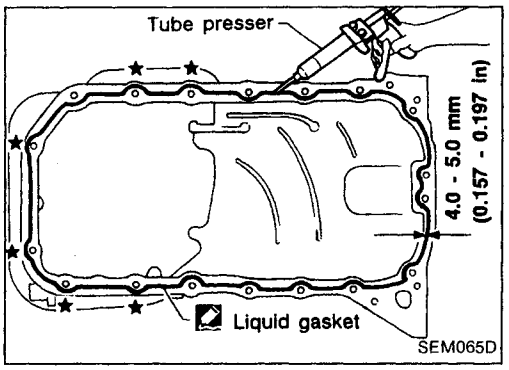

SEM065D

- **For areas marked with "★", apply liquid gasket to the outer side of the bolt hole.**

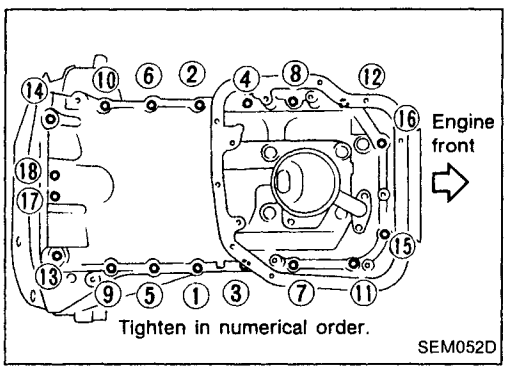

SEM052D

c. Install aluminum oil pan.

- Install bolts in the reverse order of removal.

① - ⑯ **bolts:**
: 16 - 19 N·m (1.6 - 1.9 kg-m, 12 - 14 ft-lb)

⑰, ⑱ **bolts:**
: 6.4 - 7.5 N·m (0.65 - 0.76 kg-m, 56.4 - 66.0 in-lb)

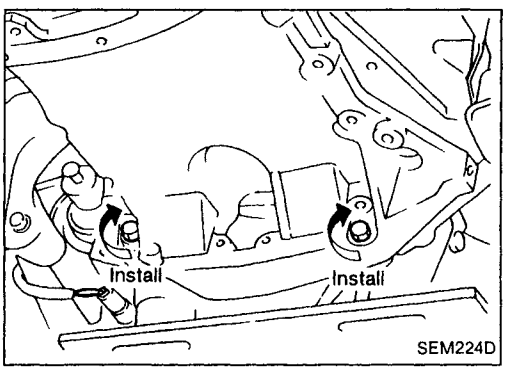

SEM224D

2. Install the two engine to transaxle bolts.
For tightening torque, refer to MT or AT section ("REMOVAL AND INSTALLATION").
3. Install rear cover plate.

Simpo PDF Merge and Split Unregistered Version - http://www.simpopdf.com

Installation (Cont'd)

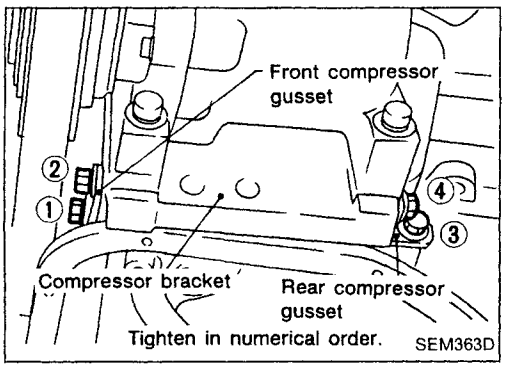

4. Install compressor gussets.
5. Install A/T shift control cable. (A/T only)
6. Install center member.
7. Install front tube.
8. Install baffle plate.

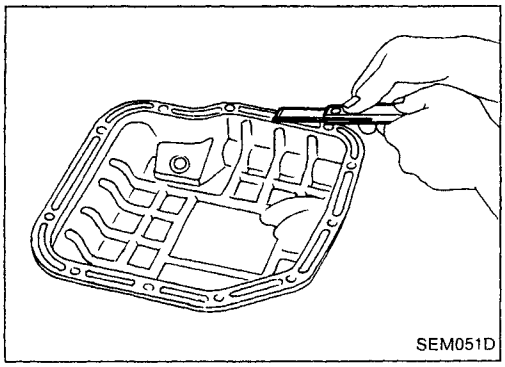

9. Install steel oil pan.

a. Use a scraper to remove all traces of liquid gasket from mating surfaces.

- Also remove traces of liquid gasket from mating surface of aluminum oil pan.

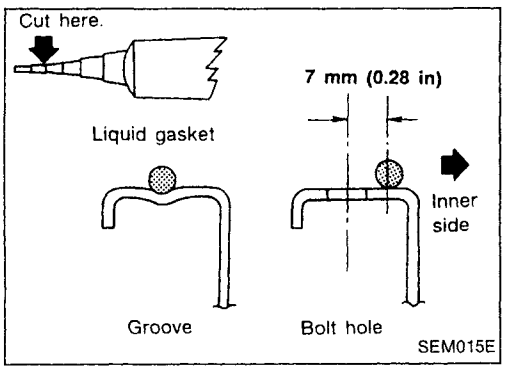

b. Apply a continuous bead of liquid gasket to mating surface of steel oil pan.

- **Use Genuine Liquid Gasket or equivalent.**
- **Be sure liquid gasket diameter is 4.0 to 5.0 mm (0.157 to 0.197 in).**
- **Attaching should be done within 5 minutes after coating.**

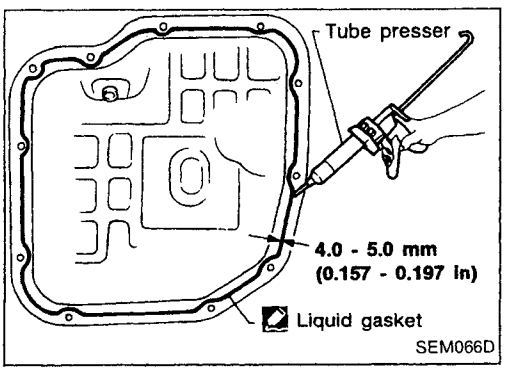

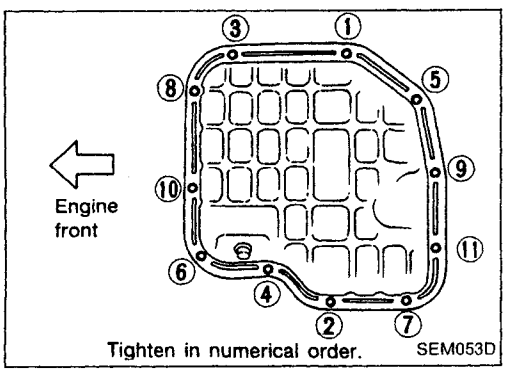

c. Install steel oil pan.

- Install bolts in the reverse order of removal together with heated oxygen sensor harness bracket.
- Wait at least 30 minutes before refilling engine oil.

Simpo PDF Merge and Split Unregistered Version - http://www.simpopdf.com

SEC. 120•130•135

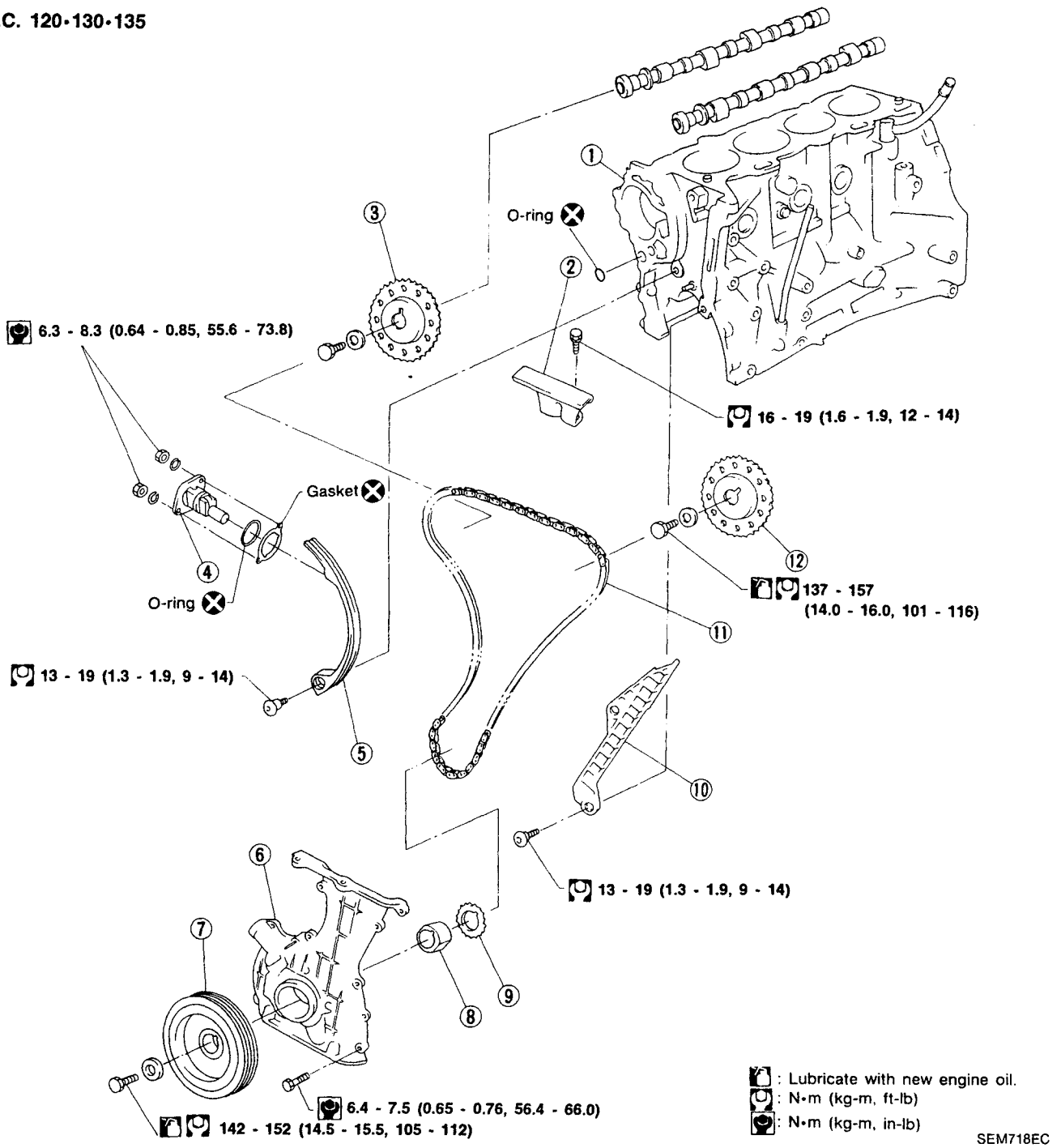

① Cylinder block
② Chain guide
③ RH camshaft sprocket
④ Chain tensioner
⑤ Chain guide
⑥ Front cover
⑦ Crank pulley
⑧ Oil pump spacer
⑨ Crankshaft sprocket
⑩ Chain guide
⑪ Timing chain
⑫ LH camshaft sprocket

Simpo PDF Merge and Split Unregistered Version - http://www.simpopdf.com

CAUTION:

- **After removing timing chain, do not turn crankshaft and camshaft separately, or valves will strike piston heads.**
- **When installing rocker arms, camshafts, chain tensioner, oil seals, or other sliding parts, lubricate contacting surfaces with new engine oil.**
- **Apply new engine oil to bolt threads and seat surfaces when installing cylinder head, camshaft sprockets, crankshaft pulley, and camshaft brackets.**

Removal

1. Release fuel pressure.
   Refer to "Releasing Fuel Pressure" in EC section.
2. Remove engine under covers.
3. Remove front RH wheel and engine side cover.
4. Drain coolant by removing cylinder block drain plug and radiator drain cock.
5. Remove radiator.
6. Remove air duct to intake manifold.
7. Remove drive belts and water pump pulley.
8. Remove alternator and power steering oil pump.
9. Remove vacuum hoses, fuel hoses, wires, harness, connectors and so on.
10. Remove all spark plugs.

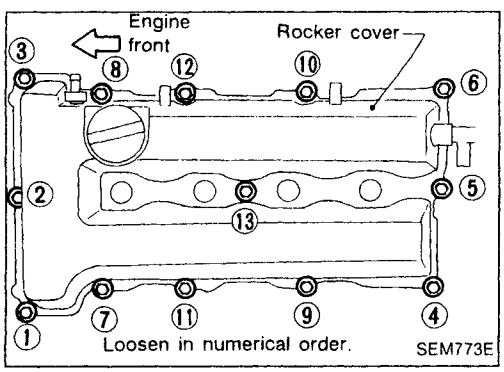

11. Remove rocker cover and oil separator.

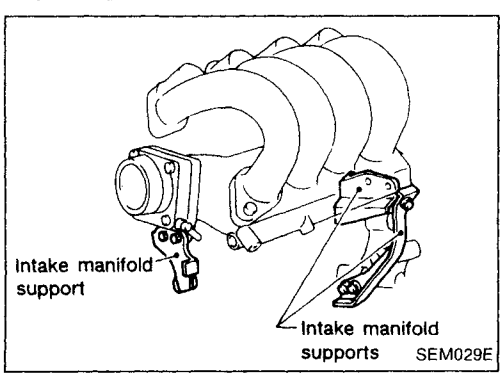

12. Remove intake manifold supports.

Simpo PDF Merge and Split Unregistered Version - http://www.simpopdf.com

Removal (Cont'd)

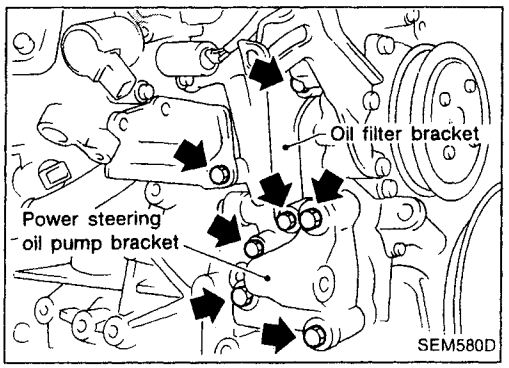

13. Remove oil filter bracket and power steering oil pump bracket.

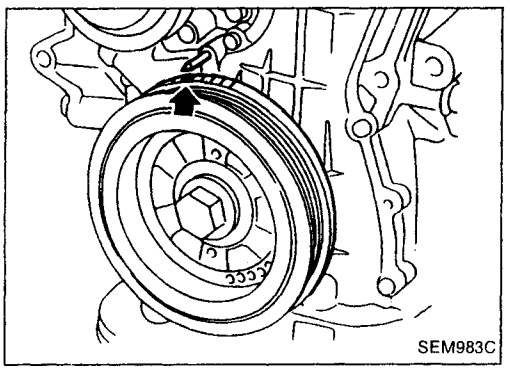

14. Set No. 1 piston at TDC on the compression stroke by rotating crankshaft.

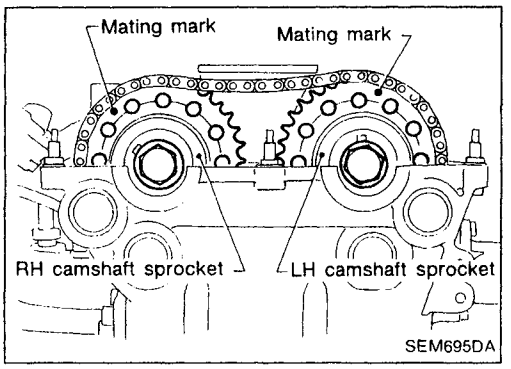

- **Rotate crankshaft until mating mark on camshaft sprocket is set at position indicated in figure at left.**

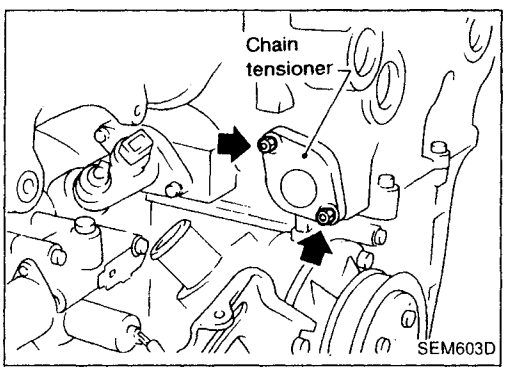

15. Remove chain tensioner.

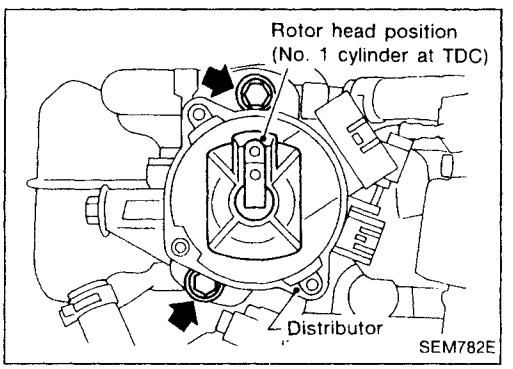

16. Remove distributor.

Do not turn rotor with distributor removed.

Simpo PDF Merge and Split Unregistered Version - http://www.simpopdf.com

Removal (Cont'd)

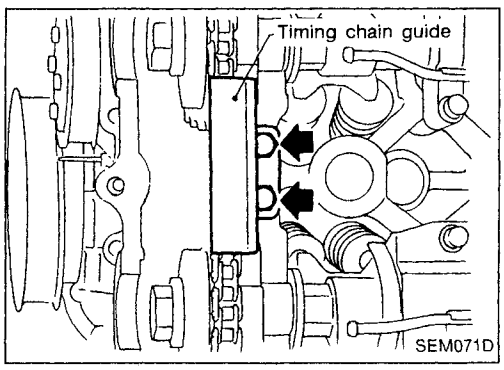

17. Remove timing chain guide.

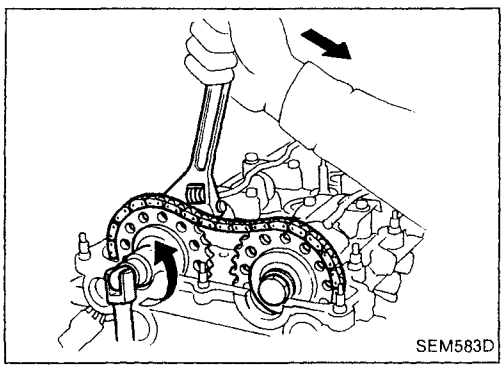

18. Remove camshaft sprockets.

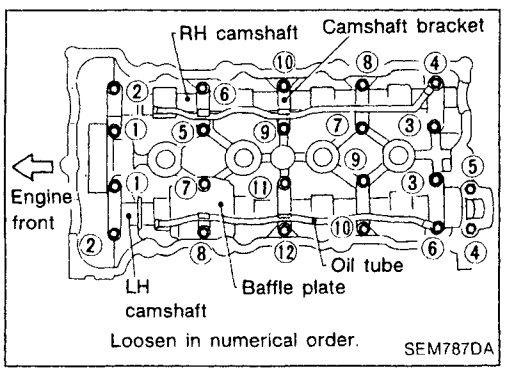

19. Remove camshafts, camshaft brackets, oil tubes and baffle plate.

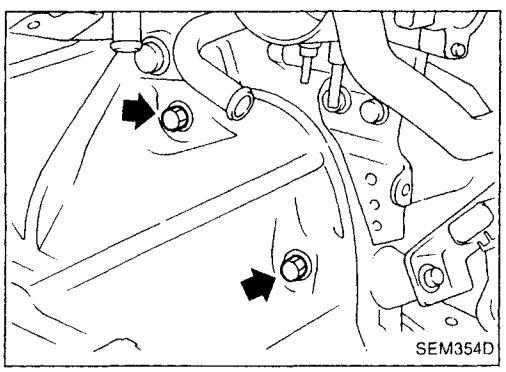

20. Remove starter motor.

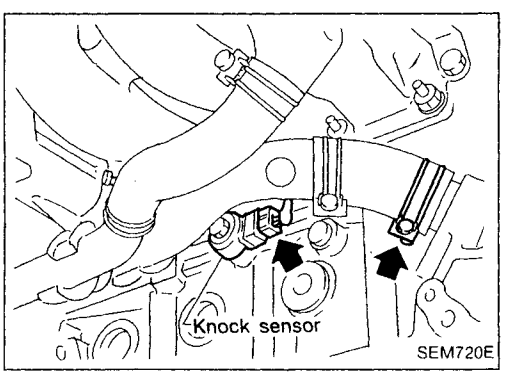

21. Remove the following water hoses.
- Water hose for cylinder block.
- Water hoses from heater.

22. Remove knock sensor harness connector.

Simpo PDF Merge and Split Unregistered Version - http://www.simpopdf.com

Removal (Cont'd)

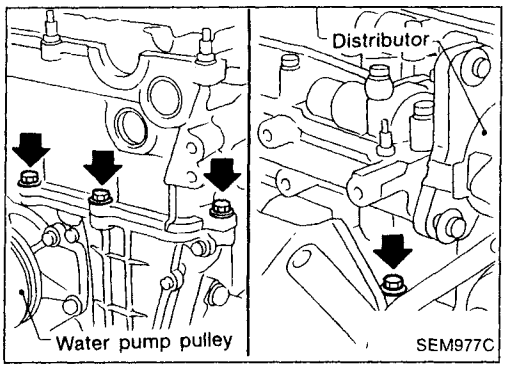

23. Remove cylinder head outside bolts.

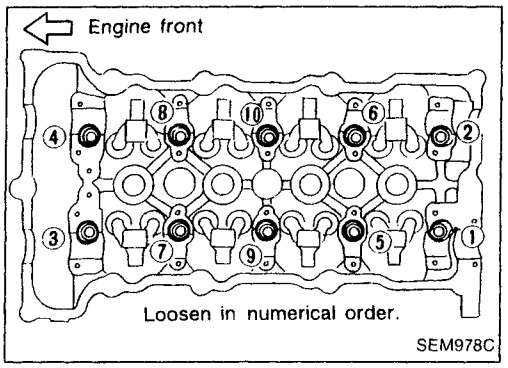

24. Remove cylinder head bolts.
- **Bolts should be loosened in two or three steps.**

25. Remove cylinder head completely with intake and exhaust manifolds.
26. Remove oil pans.
Refer to "Removal" in "OIL PAN" (EM-63).

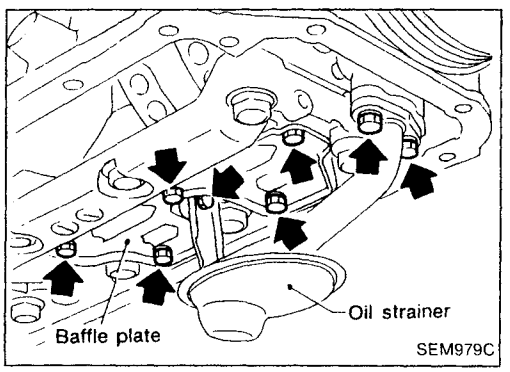

27. Remove oil strainer.

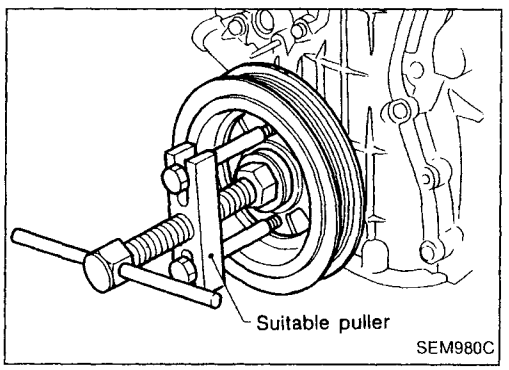

28. Remove crankshaft pulley.

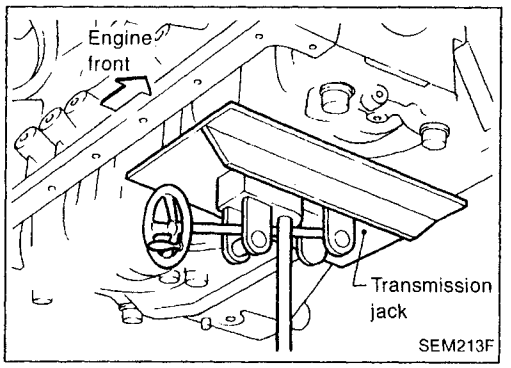

29. Set a suitable transmission jack under main bearing.

Simpo PDF Merge and Split Unregistered Version - http://www.simpopdf.com

Removal (Cont'd)

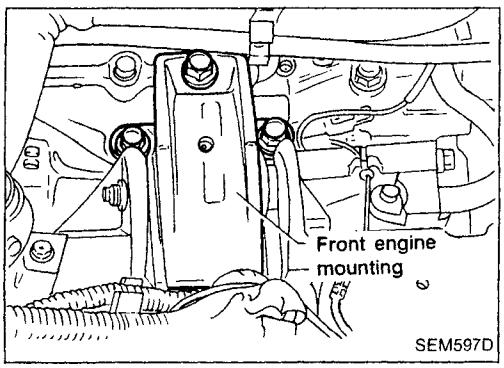

30. Remove front engine mounting.

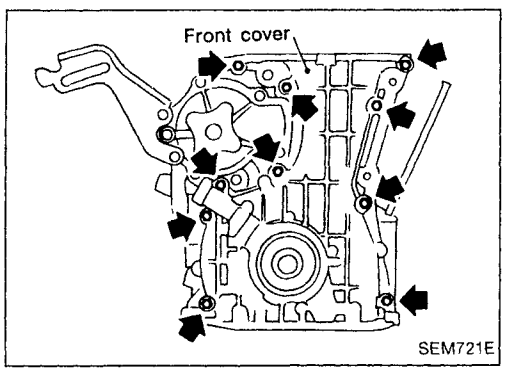

31. Remove front cover and oil pump drive spacer.
- Inspect for oil leakage at front oil seal. Replace seal if oil leak is present.

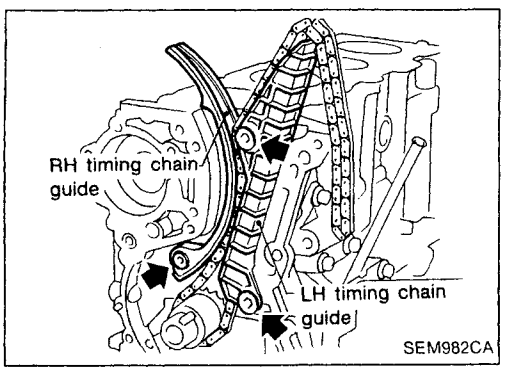

32. Remove timing chain guides and timing chain.

Inspection

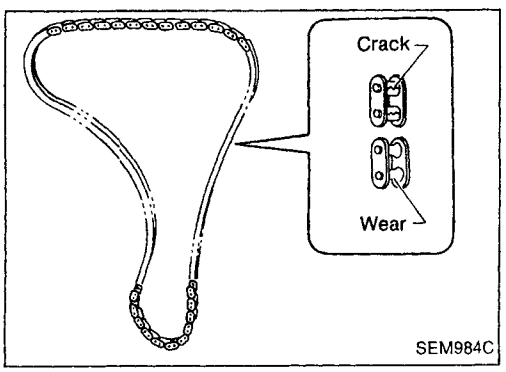

Check for cracks and excessive wear at roller links. Replace chain if necessary.

Installation

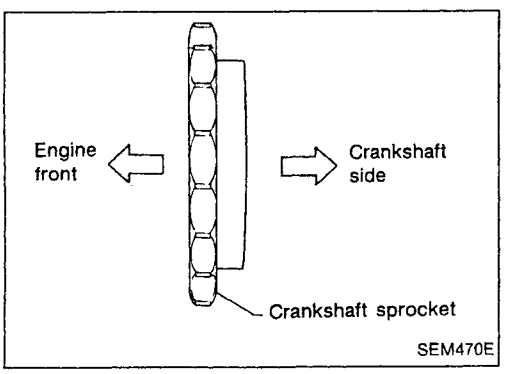

1. Install crankshaft sprocket on crankshaft.
- **Make sure that mating marks on crankshaft sprocket face front of engine.**

Simpo PDF Merge and Split Unregistered Version - http://www.simpopdf.com

Installation (Cont'd)

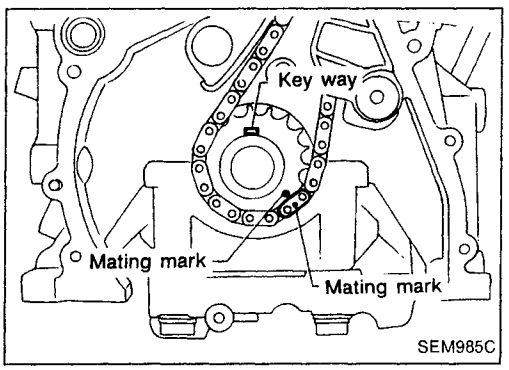

2. Position crankshaft so that No. 1 piston is set at TDC and key way is at 12 o'clock. Fit timing chain on crankshaft sprocket, aligning the mating marks.

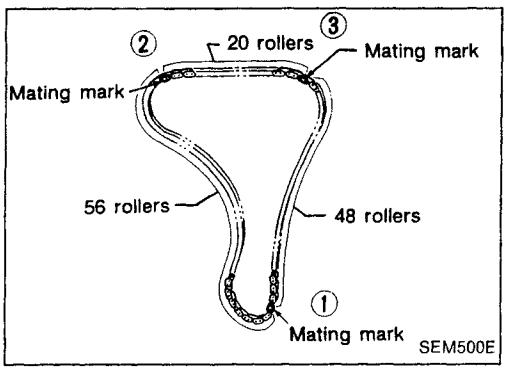

- Mating mark color on timing chain.
  ① : **Gold**
  ②, ③: **Silver**

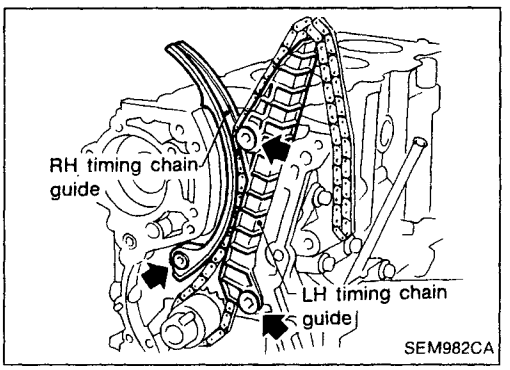

3. Install timing chain and timing chain guides.

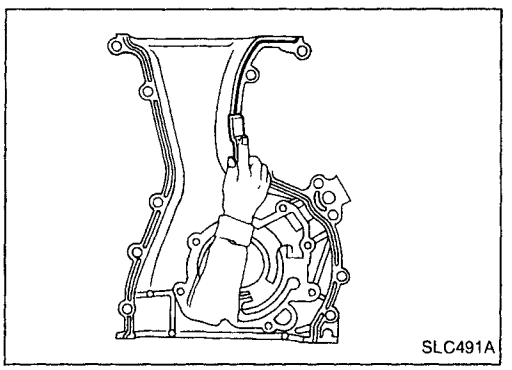

4. Before installing front cover, remove all traces of liquid gasket from mating surface using a scraper.
- Also remove traces of liquid gasket from mating surface of cylinder block.

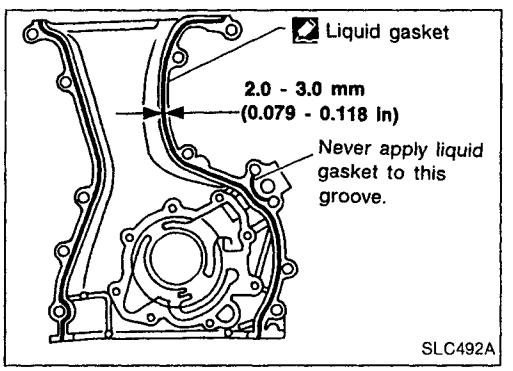

5. Apply a continuous bead of liquid gasket to mating surface of front cover.
- **Use Genuine Liquid Gasket or equivalent.**
- **Be sure to install new front oil seal in the right direction. Refer to EM-82.**

Simpo PDF Merge and Split Unregistered Version - http://www.simpopdf.com

Installation (Cont'd)

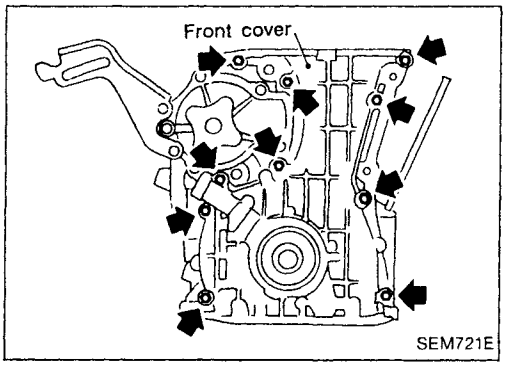

6. Install oil pump drive spacer and front cover.

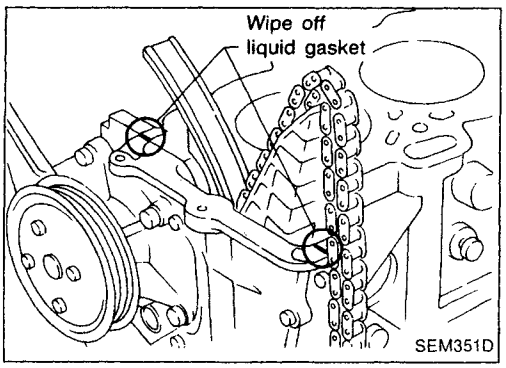

- Wipe off excessive liquid gasket.

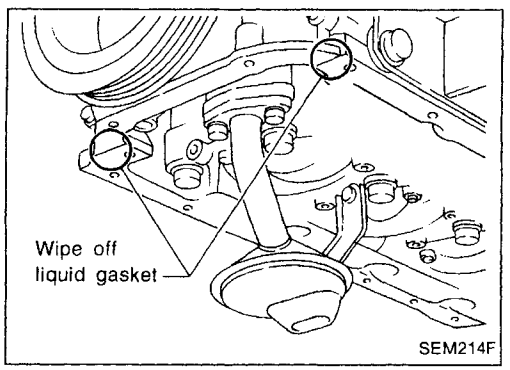

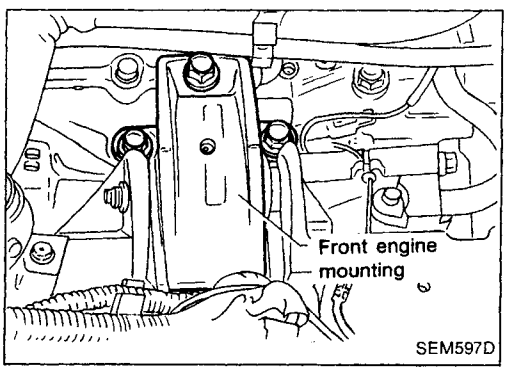

7. Install front engine mounting.

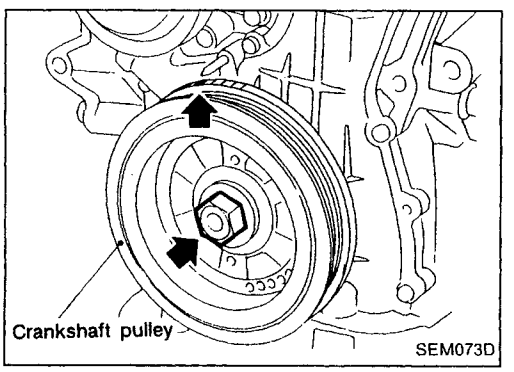

8. Install crankshaft pulley.
9. Set No. 1 piston at TDC on its compression stroke.

Simpo PDF Merge and Split Unregistered Version - http://www.simpopdf.com

Installation (Cont'd)

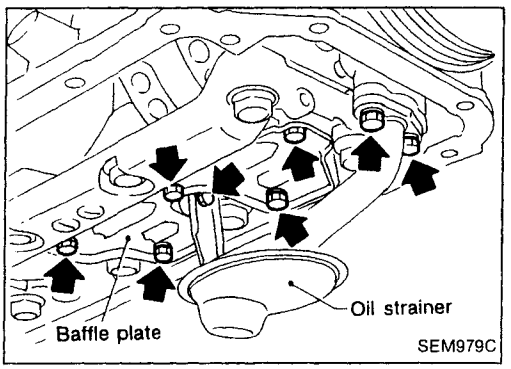

10. Install oil strainer.
11. Install oil pan.
    Refer to "Installation" in "OIL PAN" (EM-66).

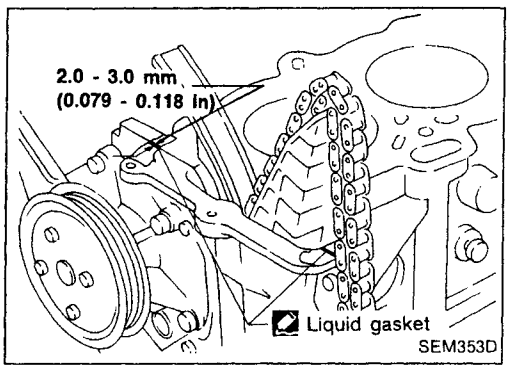

12. Before installing cylinder head gasket, apply a continuous bead of liquid gasket to mating surface of cylinder block.

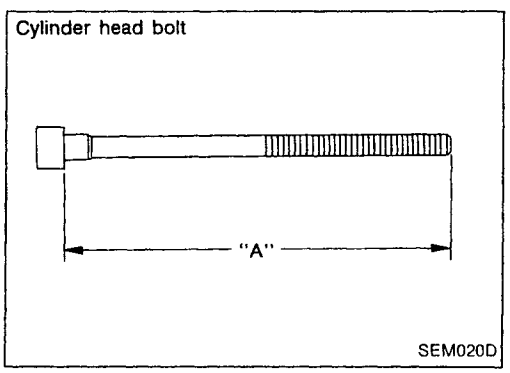

13. Install cylinder head completely with intake and exhaust manifolds.
- **Apply engine oil to threads and seating surfaces of cylinder head bolts before installing them.**
- **Be sure to install washers between bolts and cylinder head.**

CAUTION:
The cylinder head bolts can be reused providing dimension "A" is not exceeded.

Dimension "A":
158.2 mm (6.228 in)

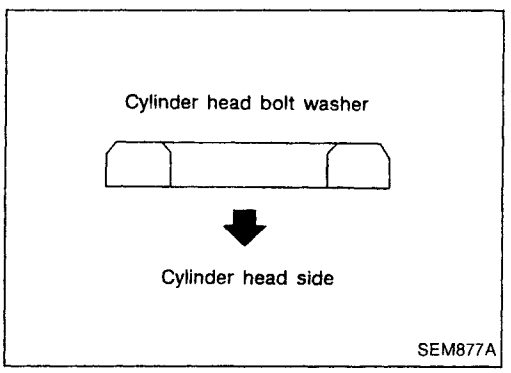

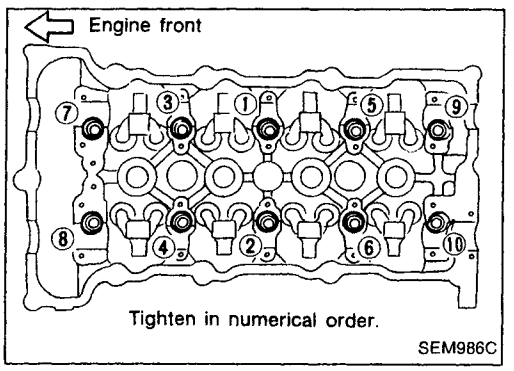

- **Tightening procedure:**

ⓐ Tighten all bolts to 39 N·m (4.0 kg-m, 29 ft-lb).
ⓑ Tighten all bolts to 78 N·m (8.0 kg-m, 58 ft-lb).
ⓒ Loosen all bolts completely.
ⓓ Tighten all bolts to 34 to 44 N·m (3.5 to 4.5 kg-m, 25 to 33 ft-lb).

Simpo PDF Merge and Split Unregistered Version - http://www.simpopdf.com

Installation (Cont'd)

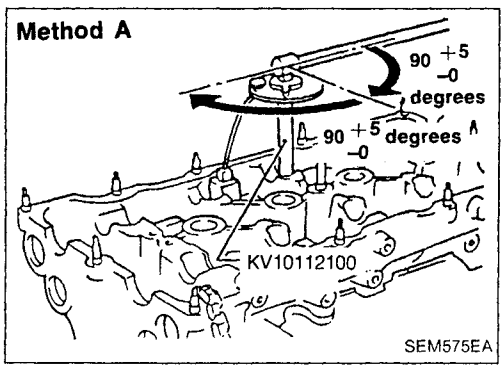

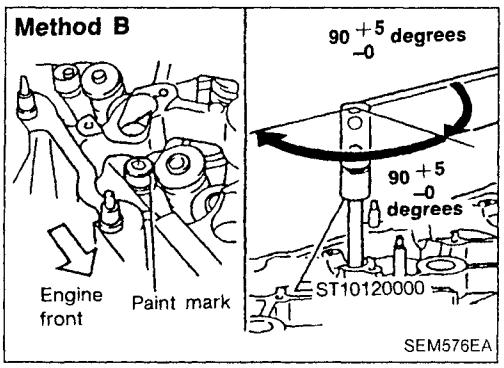

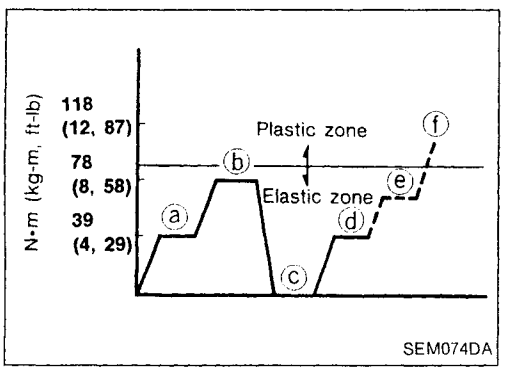

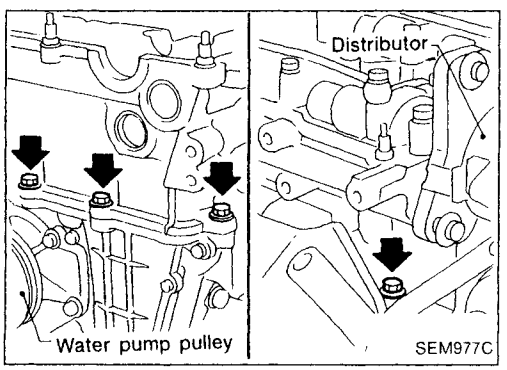

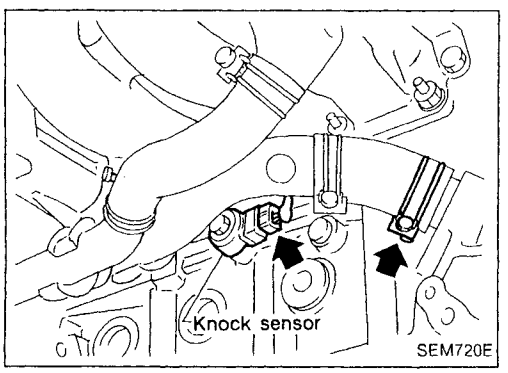

ⓔ **Method A: Turn all bolts 90 to 95 degrees clockwise with Tool or suitable angle wrench.**
Method B: If angle wrench is not available, do the following. Mark the side of all bolts with paint marks facing the front of the engine. Then turn them 90 to 95 degrees clockwise.

ⓕ **Turn all bolts 90 to 95 degrees clockwise.**

ⓖ **Ensure that paint mark on each bolt faces the rear of the engine. (Method B only)**

Do not turn any bolt 180 to 190 degrees clockwise all at once.

	Tightening torque N·m (kg-m, ft-lb)
ⓐ	39 (4.0, 29)
ⓑ	78 (8.0, 58)
ⓒ	0 (0, 0)
ⓓ	34 - 44 (3.5 - 4.5, 25 - 33)
ⓔ	90 - 95 degrees (90 degree preferred)
ⓕ	90 - 95 degrees (90 degree preferred)

14. Install cylinder head outside bolts.
15. Install the following water hoses.
- Water hose for cylinder block.
- Water hoses for heater.

16. Install knock sensor harness connector.

Simpo PDF Merge and Split Unregistered Version - http://www.simpopdf.com

Installation (Cont'd)

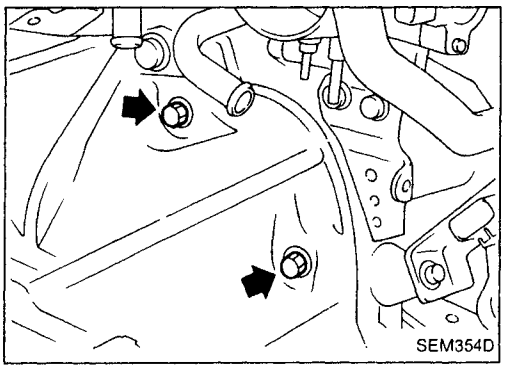

17. Install starter motor.

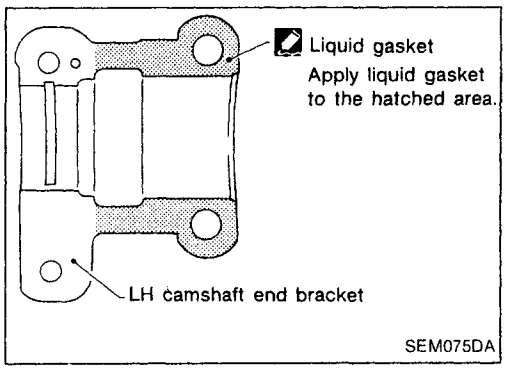

18. Remove all traces of liquid gasket from mating surface of LH camshaft end bracket.
- Also remove traces of liquid gasket from mating surface of cylinder head.

19. Apply liquid gasket to mating surface of LH camshaft end bracket as shown in illustration.
- Use Genuine Liquid Gasket or equivalent.

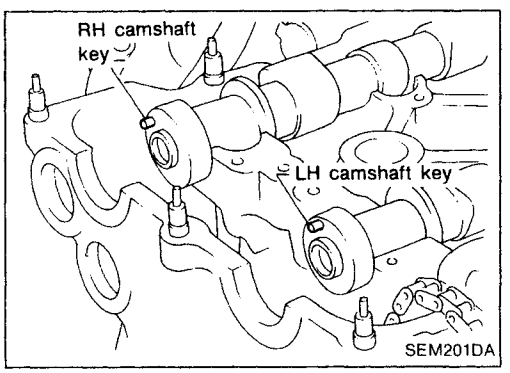

20. Install camshafts, camshaft brackets, oil tubes and baffle plate.
- Position camshaft.
- LH camshaft key at about 12 o'clock
- RH camshaft key at about 10 o'clock

Apply engine oil to bearings and cam surfaces of camshafts before installing them.

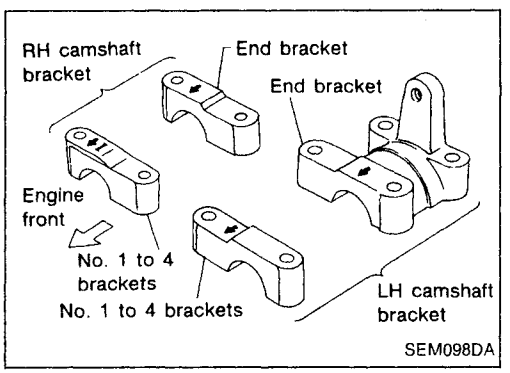

- Position camshaft brackets as shown in illustration.

Apply engine oil to threads and seating surfaces of camshaft bracket bolts before installing them.

Simpo PDF Merge and Split Unregistered Version - http://www.simpopdf.com

Installation (Cont'd)

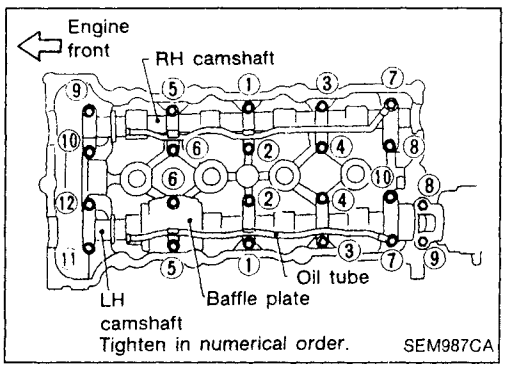

- **Tightening procedure**

STEP 1:

RH camshaft

Tighten bolts ⑨ - ⑩ in that order then tighten bolts ① - ⑧ in that order.

: 2 N·m (0.2 kg-m, 1.4 ft-lb)

LH camshaft

Tighten bolts ⑪ - ⑫ in that order then tighten bolts ① - ⑩ in that order.

: 2 N·m (0.2 kg-m, 1.4 ft-lb)

STEP 2:

Tighten bolts in the specified order.

: 6 N·m (0.6 kg-m, 4.3 ft-lb)

STEP 3:

Tighten bolts in the specified order.

Bolt type Ⓐ Ⓑ Ⓓ Ⓔ Ⓕ

: 9.8 - 11.8 N·m (1.0 - 1.2 kg-m, 7.2 - 8.7 ft-lb)

Bolt type Ⓒ

: 18 - 25 N·m (1.8 - 2.6 kg-m, 13 - 19 ft-lb)

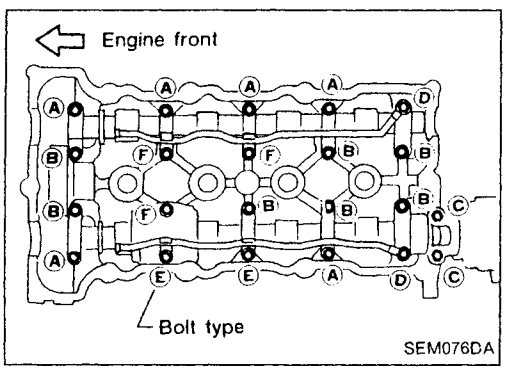

21. Install camshaft sprockets.

Line up mating marks on timing chain with mating marks on camshaft sprockets.

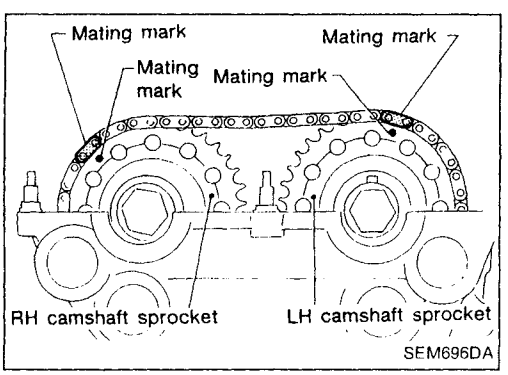

- Lock camshafts as shown in figure and tighten to specified torque.

: 137 - 157 N·m (14.0 - 16.0 kg-m, 101 - 116 ft-lb)

Apply engine oil to threads and seating surfaces of camshaft sprocket bolts before installing them.

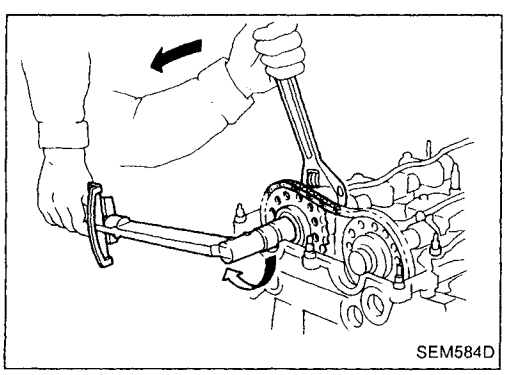

22. Install timing chain guide.

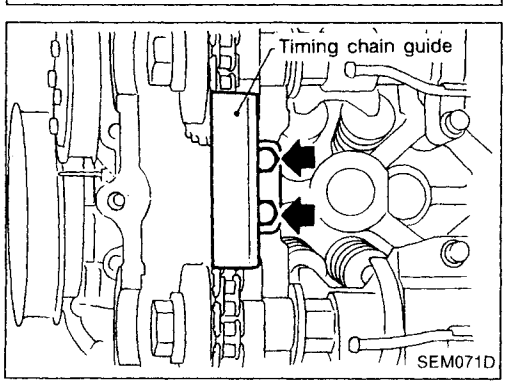

Simpo PDF Merge and Split Unregistered Version - http://www.simpopdf.com

Installation (Cont'd)

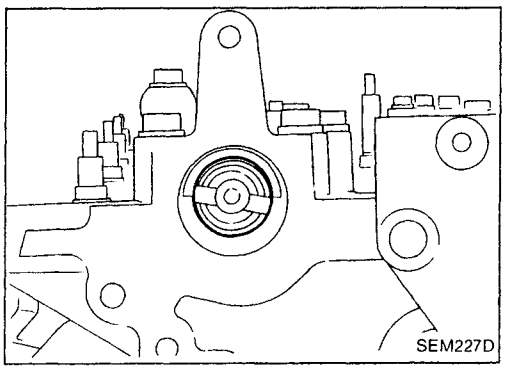

23. Install distributor.

- **Make sure that position of camshaft is as shown in figure.**

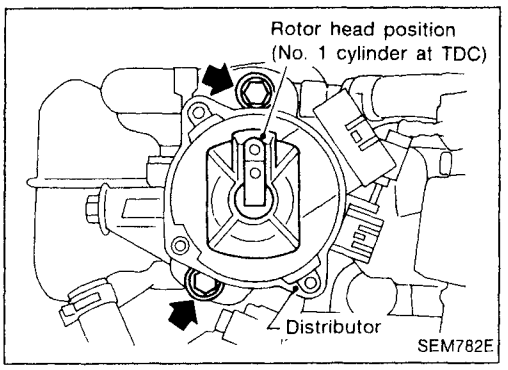

- **Make sure that No. 1 piston is set at TDC and that distributor is set at No. 1 cylinder spark position.**

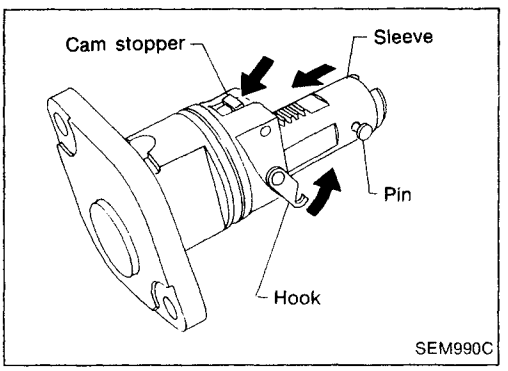

24. Install chain tensioner.

Make sure the camshaft sprockets are tightened completely. Press cam stopper down and "press-in" sleeve until hook can be engaged on pin. When tensioner is bolted in position the hook will release automatically. Make sure arrow "A" points toward engine front.

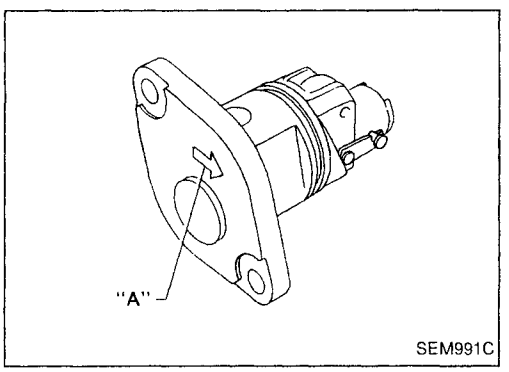

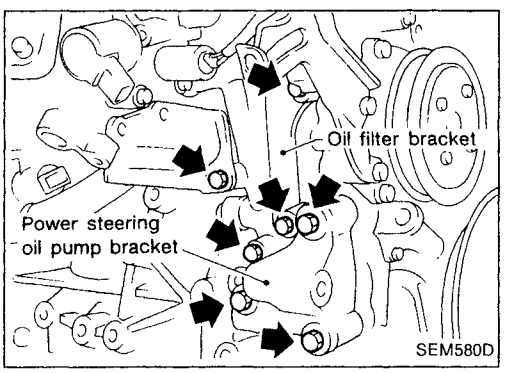

25. Install oil filter bracket and power steering oil pump bracket.

Simpo PDF Merge and Split Unregistered Version - http://www.simpopdf.com

Installation (Cont'd)

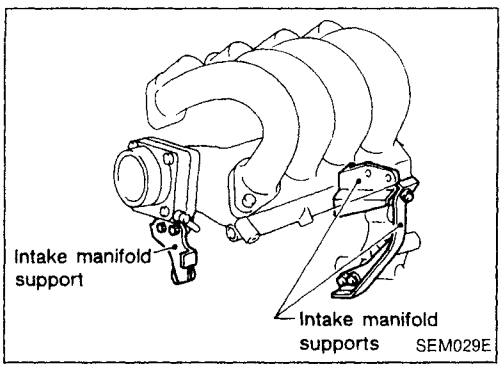

26. Install intake manifold supports.

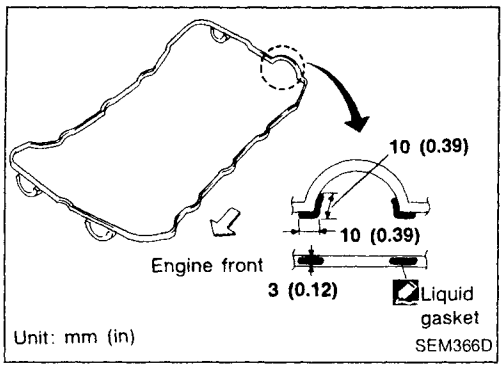

27. Remove all old liquid gasket from mating surfaces of rocker cover gasket and cylinder head.
28. Apply a continuous bead of liquid gasket to mating surfaces of rocker cover gasket and cylinder head.
- **Use Genuine Liquid Gasket or equivalent.**

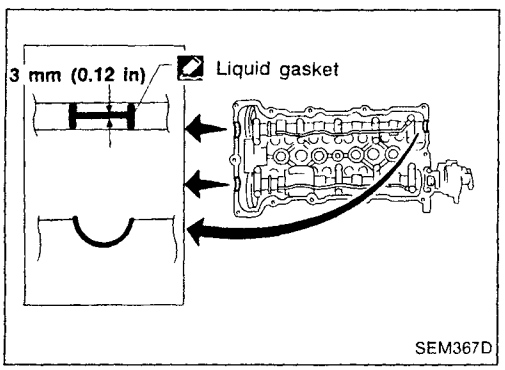

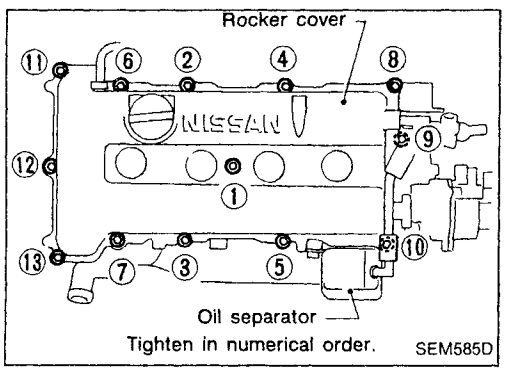

29. Install rocker cover and oil separator.
(1) Tighten nuts ① - ⑩ - ⑪ - ⑬ - ⑧ in that order to 4 N·m (0.4 kg-m, 35 in-lb).
(2) Tighten nuts ① through ⑬ in numerical order to 8 to 10 N·m (0.8 to 1.0 kg-m, 69 to 87 in-lb).
30. Refit spark plugs and leads.
31. Install vacuum hoses, fuel hoses, wires, harness, connectors and so on.
32. Install power steering oil pump and alternator.
33. Install water pump pulley and drive belts.
34. Refit air duct to intake manifold.
35. Install radiator.
36. Refit hoses and refill with coolant. (Refer to MA section.)
37. Install engine side cover and front RH wheel.
38. Install engine under covers.

Simpo PDF Merge and Split Unregistered Version - http://www.simpopdf.com

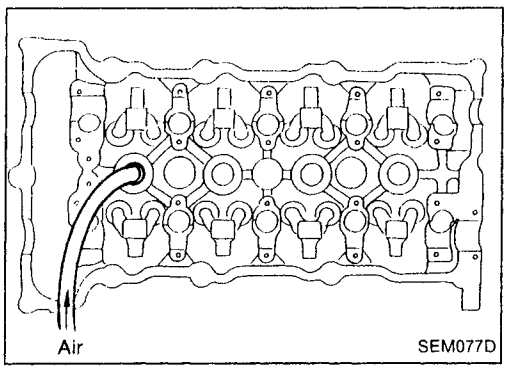

VALVE OIL SEAL

1. Remove accelerator cable.
2. Remove rocker cover and oil separator.
3. Remove camshafts and sprockets.
   Refer to "Removal" in "TIMING CHAIN" (EM-69).
4. Remove spark plugs.
5. Install air hose adapter into spark plug hole and apply air pressure to hold valves in place. Apply a pressure of 490 kPa (4.9 bar, 5 kg/cm^2, 71 psi).
6. Remove rocker arm, rocker arm guide and shim.

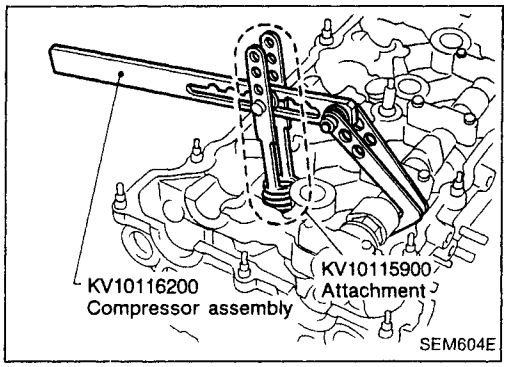

7. Remove valve spring with Tool.

Piston concerned should be set at TDC to prevent valve from falling.

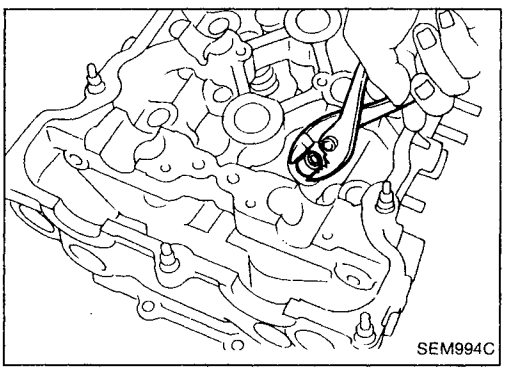

8. Remove valve oil seal.

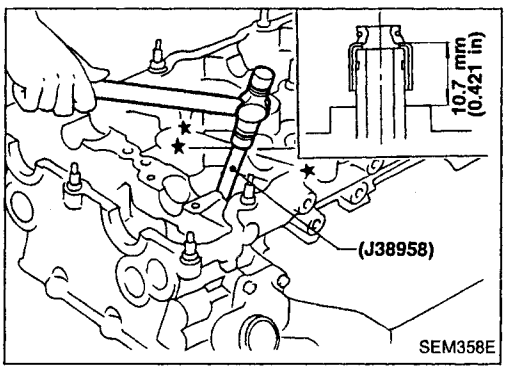

9. Apply engine oil to new valve oil seal and install it with Tool.

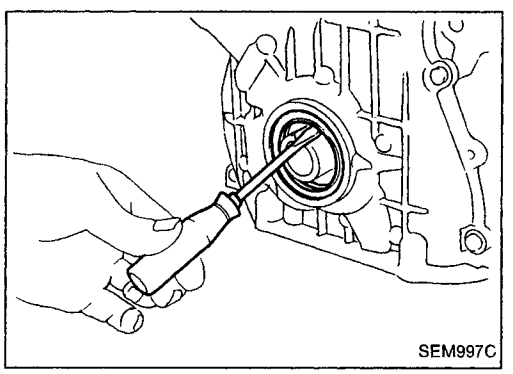

FRONT OIL SEAL

1. Remove the following parts:
- Engine under cover
- Front RH wheel and engine side cover
- Drive belts
- Crankshaft pulley

2. Remove front oil seal.

Be careful not to scratch front cover.

Simpo PDF Merge and Split Unregistered Version - http://www.simpopdf.com

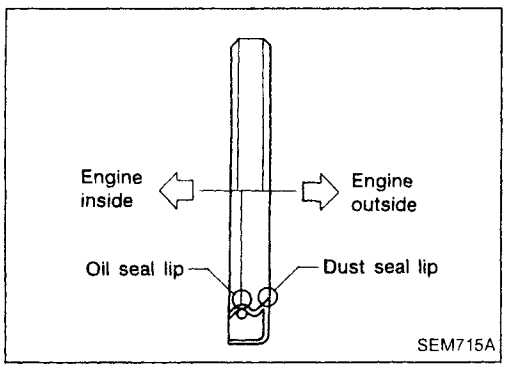

- Install new oil seal in the direction shown.

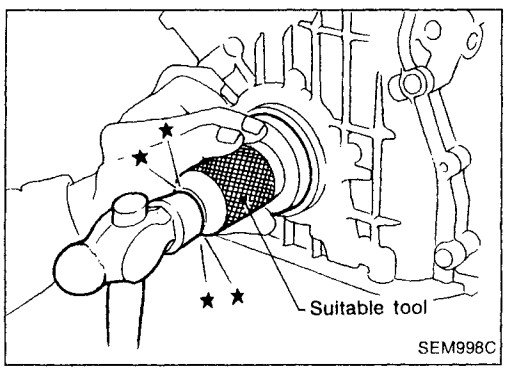

3. Apply engine oil to new oil seal and install it using a suitable tool.

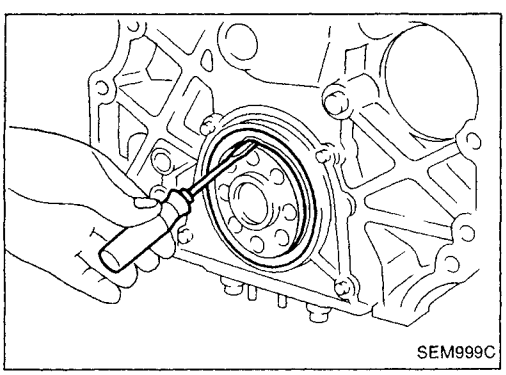

REAR OIL SEAL

1. Remove transaxle. (Refer to MT or AT section.)
2. Remove flywheel or drive plate.
3. Remove rear oil seal.

Be careful not to scratch rear oil seal retainer.

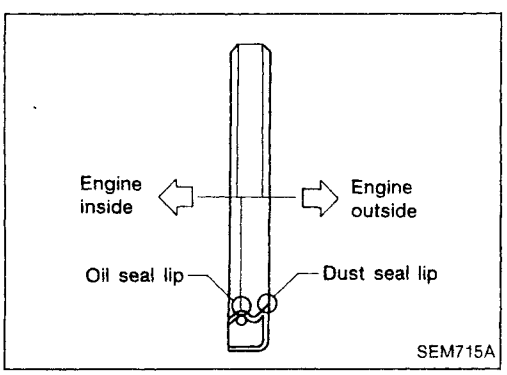

- Install new oil seal in the direction shown.

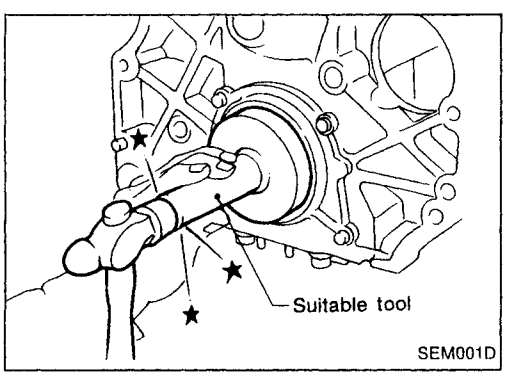

4. Apply engine oil to new oil seal and install it using a suitable tool.

Simpo PDF Merge and Split Unregistered Version - http://www.simpopdf.com

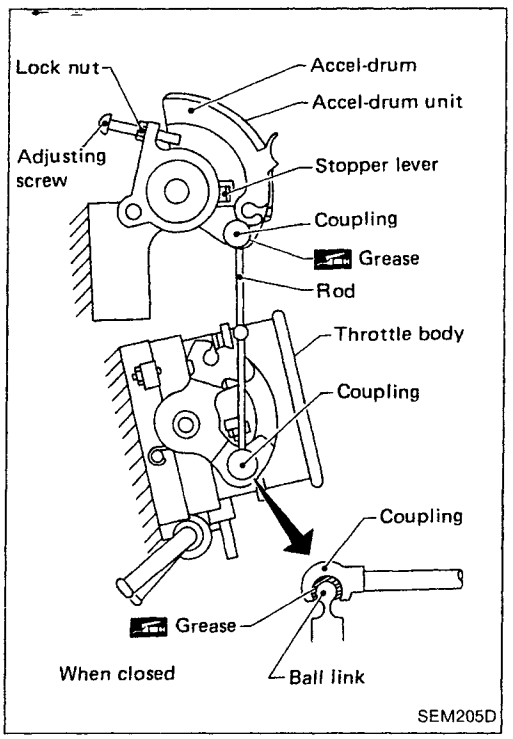

Adjust accel-drum unit whenever any of the following parts (new or old) are installed:

- **Accel-drum unit**
- **Throttle chamber**
- **Rod (Always replace with a new one after removal.)**

1. Install accel-drum unit and throttle chamber.
2. Apply grease all over the inside of the rod couplings.

Use genuine Nissan grease or equivalent.

3. Insert each one coupling to ball links of throttle chamber and accel-drum unit.
4. Loosen lock nut.
5. Loosen adjusting screw enough.

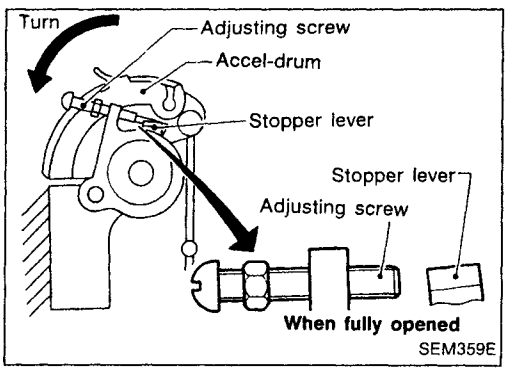

6. Manually turn accel-drum until throttle valve is fully open.

- Check that stopper lever is not touching adjusting screw. If it is, loosen adjusting screw to maintain clearance between the two.

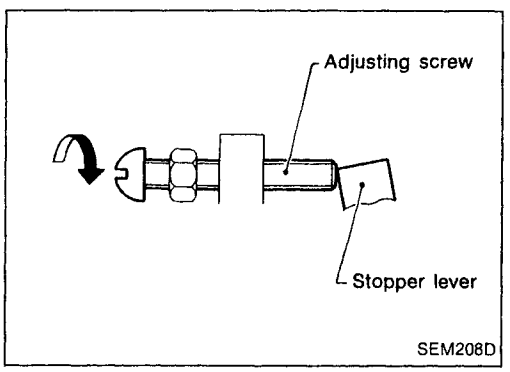

7. Turn adjusting screw until it touches stopper lever.
8. Back off accel-drum.

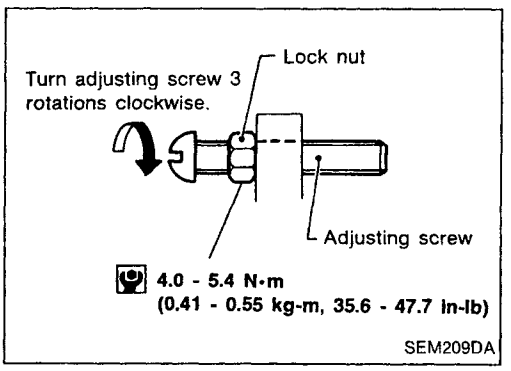

9. Turn adjusting screw 3 rotations clockwise.
10. Tighten lock nut.

Simpo PDF Merge and Split Unregistered Version - http://www.simpopdf.com

SEC. 111•130

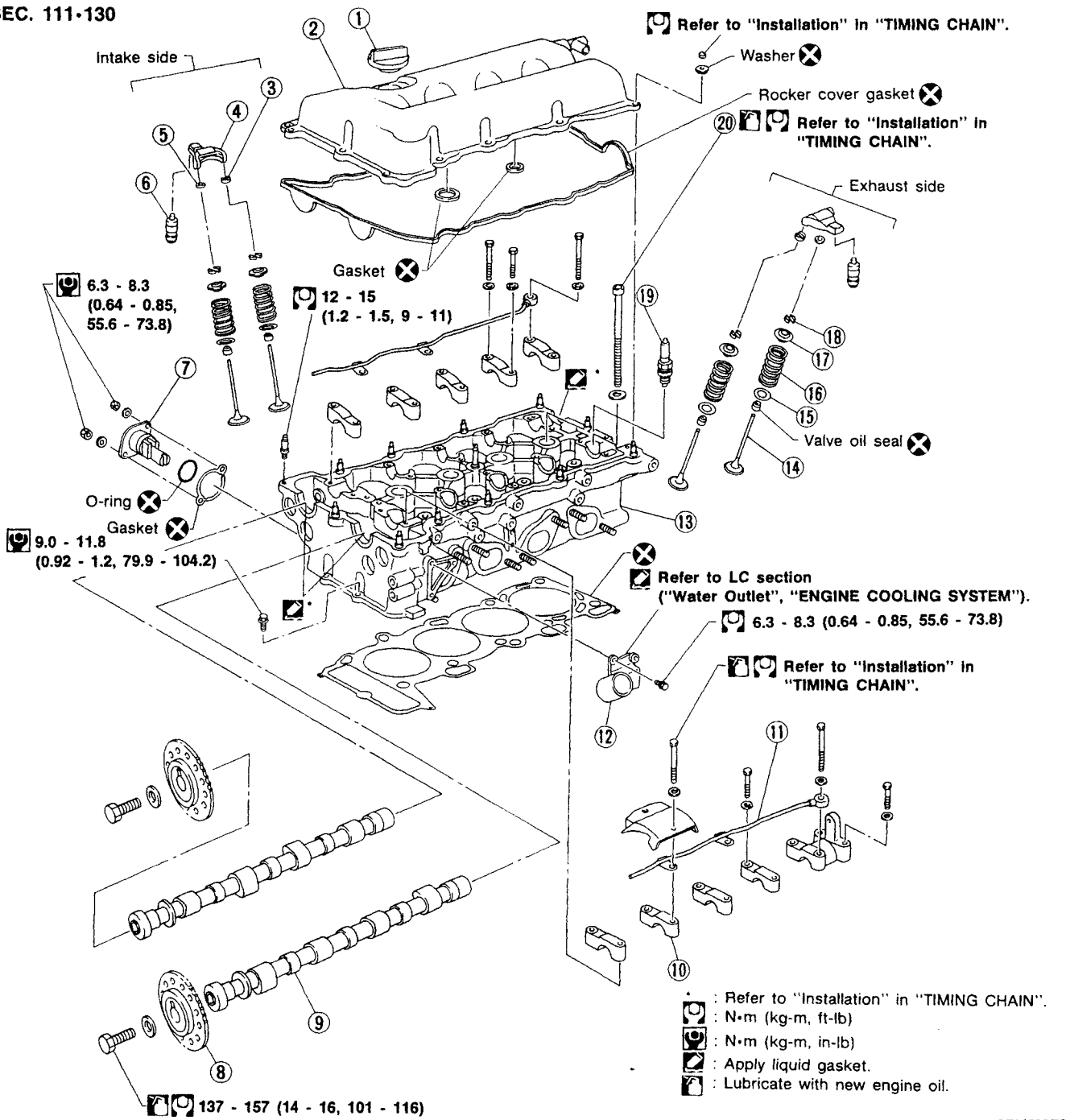

SEM722ED

① Oil filler cap
② Rocker cover
③ Rocker arm guide
④ Rocker arm
⑤ Shim
⑥ Hydraulic lash adjuster
⑦ Chain tensioner
⑧ Camshaft sprocket
⑨ Camshaft
⑩ Camshaft bracket
⑪ Oil tube
⑫ Water outlet
⑬ Cylinder head
⑭ Valve
⑮ Valve spring seat
⑯ Valve spring
⑰ Valve spring retainer
⑱ Valve collet
⑲ Spark plug
⑳ Cylinder head bolt

Simpo PDF Merge and Split Unregistered Version - http://www.simpopdf.com

CAUTION:
- **Apply new engine oil to the sliding surfaces when installing sliding parts. Sliding parts include rocker arms, camshafts, oil seal, etc.**
- **Apply new engine oil to bolt thread and seat surfaces when tightening the following: Cylinder head bolts, camshaft sprocket bolts and camshaft bracket bolts.**

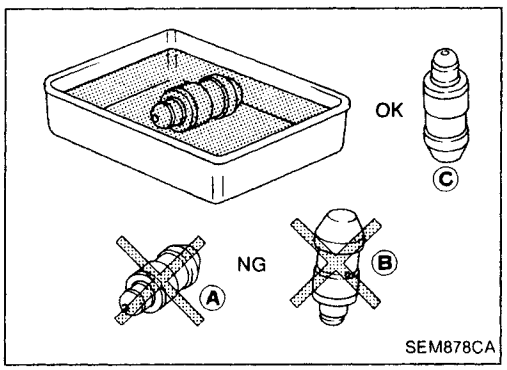

- **If a hydraulic lash adjuster is kept on its side, there is a risk of air entering it. After removal, always set hydraulic lash adjuster straight up, or keep it soaked in new engine oil.**
- **Do not disassemble hydraulic lash adjusters.**
- **Attach tags to lash adjusters so as not to mix them up.**

Removal

- This removal procedure is the same as for timing chain. Refer to EM-69.

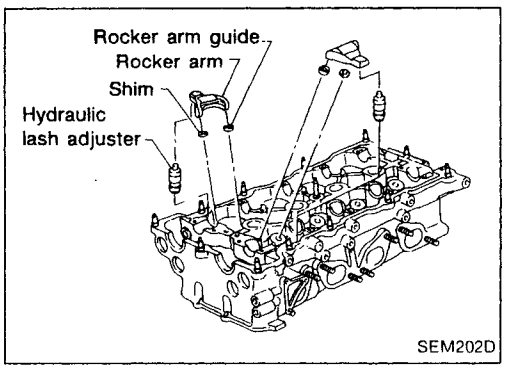

Disassembly

1. Remove rocker arms, shims, rocker arm guides and hydraulic lash adjusters from cylinder head.

CAUTION:
Keep parts in order so that they can be installed in their original positions during assembly.

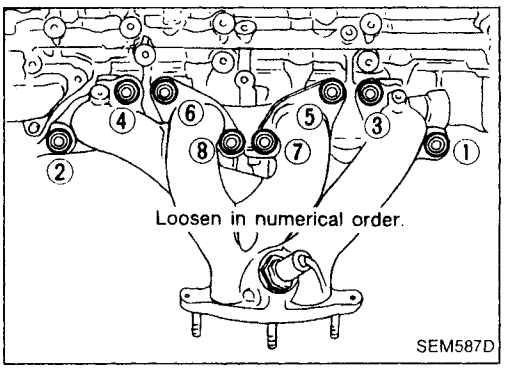

2. Remove crankcase ventilation oil separator.
3. Remove exhaust manifold cover.
4. Remove exhaust manifold.

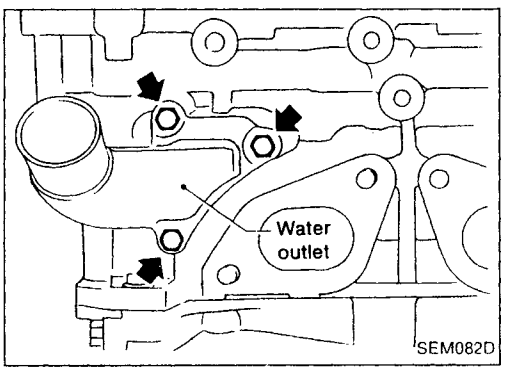

5. Remove water outlet.

Simpo PDF Merge and Split Unregistered Version - http://www.simpopdf.com

Disassembly (Cont'd)

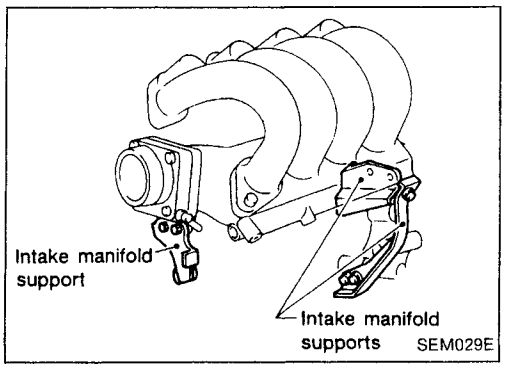

6. Remove intake manifold supports.

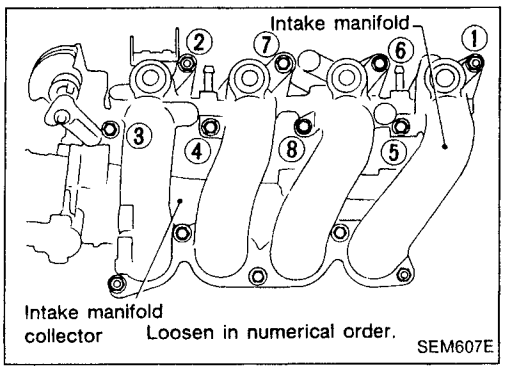

7. Remove fuel tube assembly.
   Refer to "Injector Removal and Installation" in EC section.
8. Remove intake manifold.

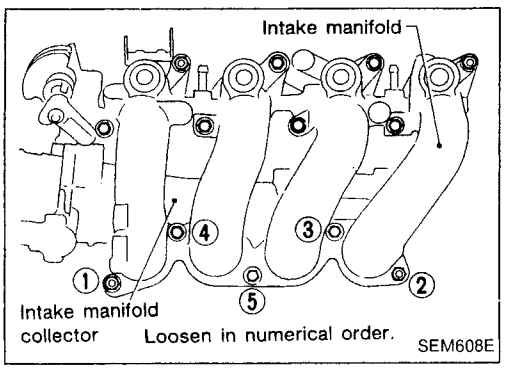

9. Remove intake manifold collector from intake manifold.

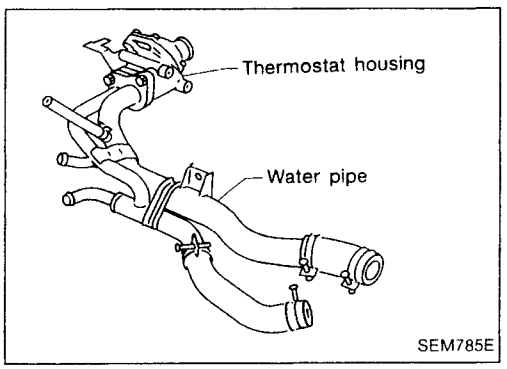

10. Remove thermostat housing with water pipe.

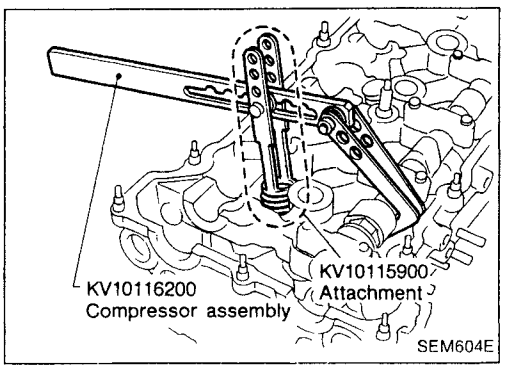

11. Remove valve components with Tool.

Simpo PDF Merge and Split Unregistered Version - http://www.simpopdf.com

Disassembly (Cont'd)

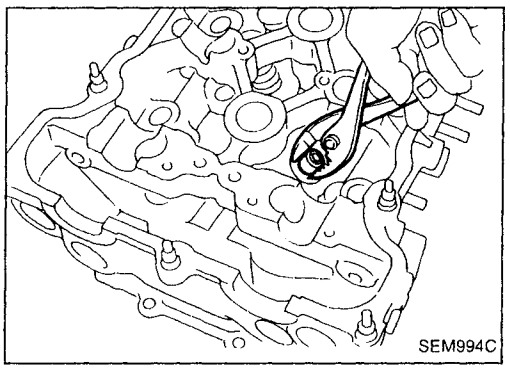
SEM994C

12. Remove valve oil seal with a suitable tool.

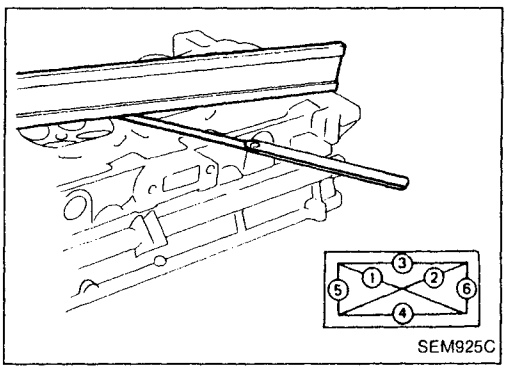

SEM925C

Inspection

CYLINDER HEAD DISTORTION

Head surface flatness:

Standard

Less than 0.03 mm (0.0012 in)

Limit

0.1 mm (0.004 in)

If beyond the specified limit, replace or resurface.

Resurfacing limit:

The resurfacing limit of cylinder head is determined by the cylinder block resurfacing in an engine.

Amount of cylinder head resurfacing is "A".

Amount of cylinder block resurfacing is "B".

The maximum limit is as follows:

A + B = 0.2 mm (0.008 in)

After resurfacing cylinder head, check that camshaft rotates freely by hand. If resistance is felt, cylinder head must be replaced.

Nominal cylinder head height:

136.9 - 137.1 mm (5.390 - 5.398 in)

CAMSHAFT VISUAL CHECK

Check camshaft for scratches, seizure and wear.

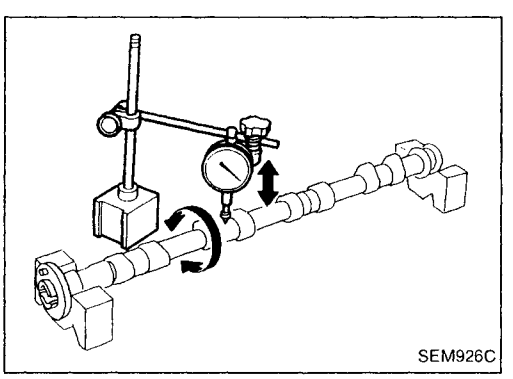
SEM926C

CAMSHAFT RUNOUT

1. Measure camshaft runout at the center journal.

Runout (Total indicator reading):

Standard

Less than 0.02 mm (0.0008 in)

Limit

0.1 mm (0.004 in)

2. If it exceeds the limit, replace camshaft.

Simpo PDF Merge and Split Unregistered Version - http://www.simpopdf.com

Inspection (Cont'd)

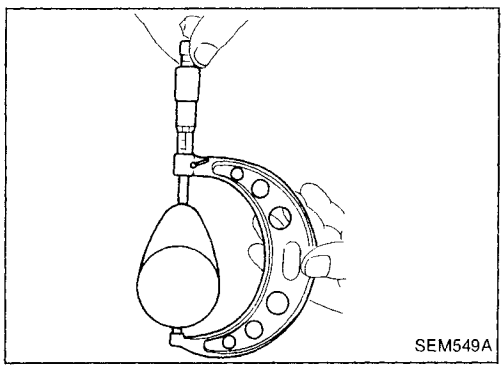
SEM549A

CAMSHAFT CAM HEIGHT

1. Measure camshaft cam height.
   Standard cam height:
   Intake
   38.408 - 38.598 mm (1.5121 - 1.5196 in)
   Exhaust
   37.920 - 38.110 mm (1.4929 - 1.5004 in)
   Cam wear limit:
   Intake & Exhaust
   0.2 mm (0.008 in)
2. If wear is beyond the limit, replace camshaft.

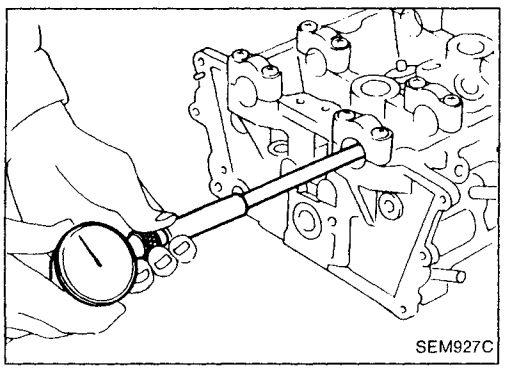
SEM927C

CAMSHAFT JOURNAL CLEARANCE

1. Install camshaft bracket and tighten bolts to the specified torque.
2. Measure inner diameter of camshaft bearing.
   Standard inner diameter:
   28.000 - 28.021 mm (1.1024 - 1.1032 in)

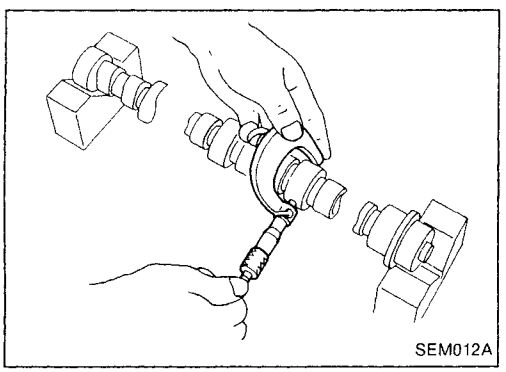
SEM012A

3. Measure outer diameter of camshaft journal.
   Standard outer diameter:
   27.935 - 27.955 mm (1.0998 - 1.1006 in)
4. If clearance exceeds the limit, replace camshaft and/or cylinder head.
   Camshaft journal clearance:
   Standard
   0.045 - 0.086 mm (0.0018 - 0.0034 in)
   Limit
   0.15 mm (0.0059 in)

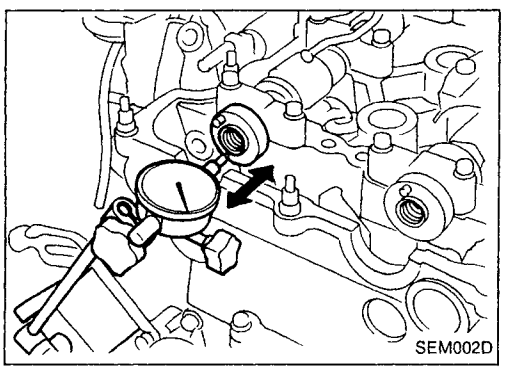
SEM002D

CAMSHAFT END PLAY

1. Install camshaft in cylinder head.
2. Measure camshaft end play.
   Camshaft end play:
   Standard
   0.055 - 0.139 mm (0.0022 - 0.0055 in)
   Limit
   0.20 mm (0.0079 in)

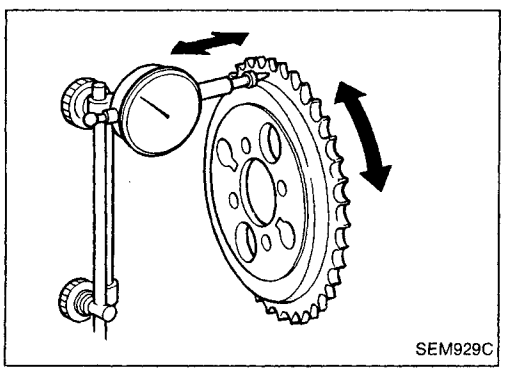
SEM929C

CAMSHAFT SPROCKET RUNOUT

1. Install sprocket on camshaft.
2. Measure camshaft sprocket runout.
   Runout (Total indicator reading):
   Limit 0.25 mm (0.0098 in)
3. If it exceeds the limit, replace camshaft sprocket.

Simpo PDF Merge and Split Unregistered Version - http://www.simpopdf.com

Inspection (Cont'd)

VALVE GUIDE CLEARANCE

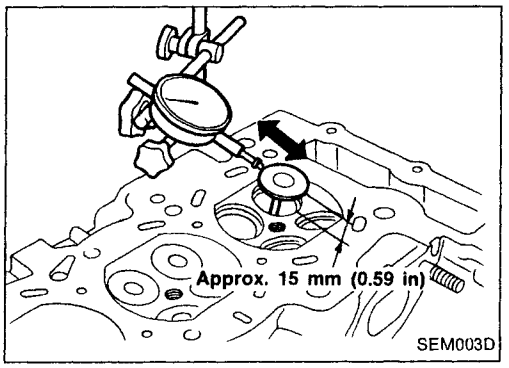

1. Measure valve deflection in a parallel direction with rocker arm. (Valve and valve guide mostly wear in this direction.)
   Valve deflection limit (Dial gauge reading):
   Intake & Exhaust
   0.2 mm (0.008 in)

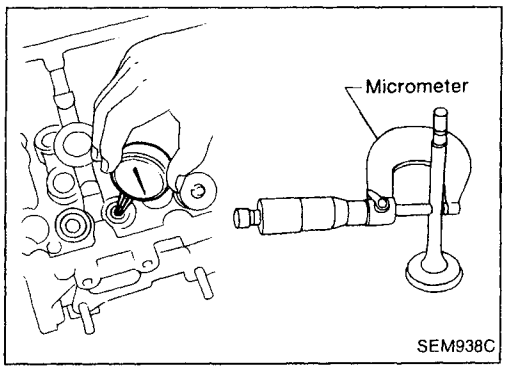

2. If it exceeds the limit, check valve to valve guide clearance.

a. Measure valve stem diameter and valve guide inner diameter.

b. Check that clearance is within specification.
   Valve to valve guide clearance:
   Standard
   Intake 0.020 - 0.053 mm (0.0008 - 0.0021 in)
   Exhaust 0.040 - 0.073 mm (0.0016 - 0.0029 in)
   Limit
   Intake 0.08 mm (0.0031 in)
   Exhaust 0.1 mm (0.004 in)

c. If it exceeds the limit, replace valve or valve guide.

VALVE GUIDE REPLACEMENT

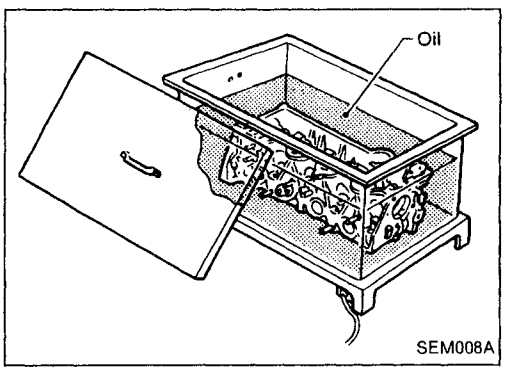

1. To remove valve guide, heat cylinder head to 110 to 130°C (230 to 266°F).

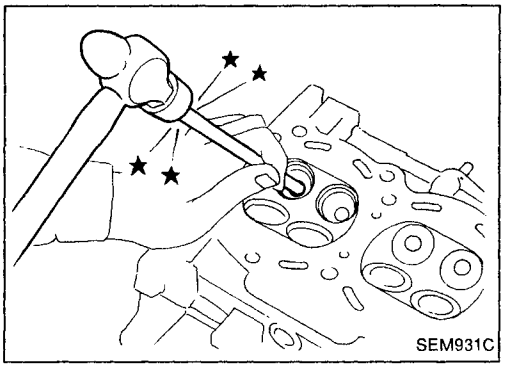

2. Press out valve guide or use a hammer and suitable tool.

Simpo PDF Merge and Split Unregistered Version - http://www.simpopdf.com

Inspection (Cont'd)

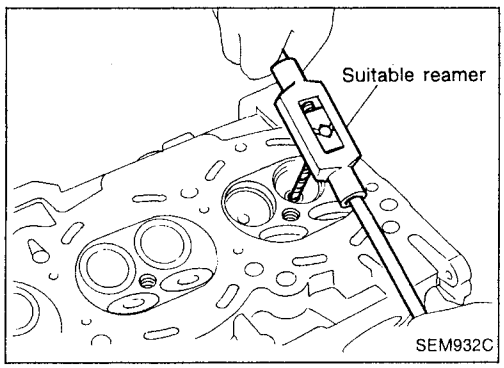

3. Ream cylinder head valve guide hole.
   Valve guide hole diameter
   (for service parts):
   Intake & Exhaust
   10.175 - 10.196 mm (0.4006 - 0.4014 in)

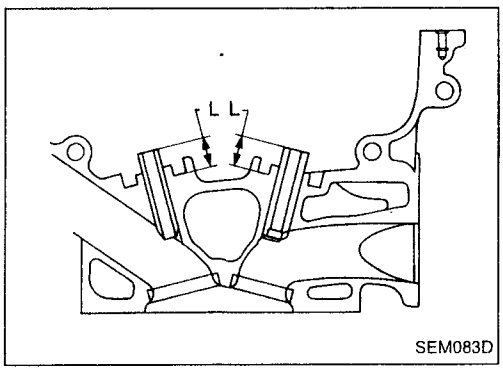

4. Heat cylinder head to 110 to 130°C (230 to 266°F) and press service valve guide onto cylinder head.
   Projection "L":
   14.0 - 14.2 mm (0.551 - 0.559 in)

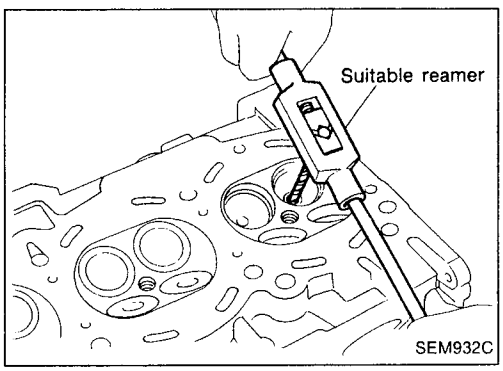

5. Ream valve guide.
   Valve guide inner diameter:
   Intake & Exhaust
   6.000 - 6.018 mm (0.2362 - 0.2369 in)

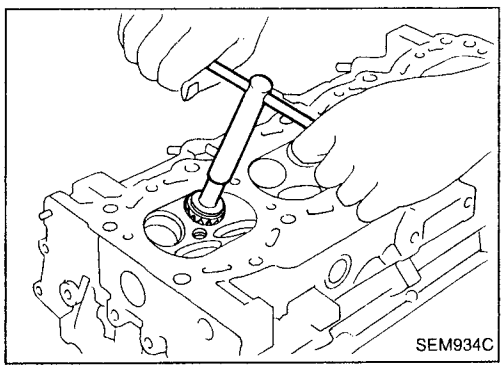

VALVE SEATS

Check valve seats for any evidence of pitting at valve contact surface. Reset or replace if it has worn out excessively.

- **Before repairing valve seats, check valve and valve guide for wear. If they have worn, replace them. Then correct valve seat.**
- **Cut with both hands to uniform the cutting surface.**

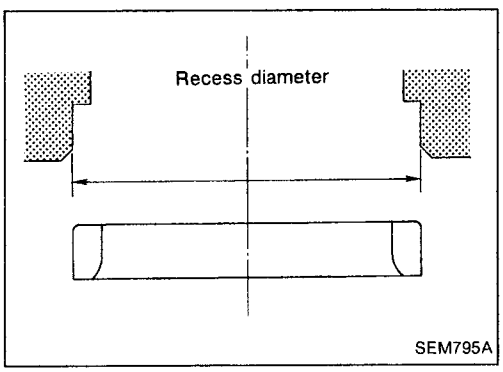

REPLACING VALVE SEAT FOR SERVICE PARTS

1. Bore out old seat until it collapses. Boring should not continue beyond the bottom face of the seat recess in cylinder head. Set the machine depth stop to ensure this.
2. Ream cylinder head recess.
   Reaming bore for service valve seat
   Oversize [0.5 mm (0.020 in)]:
   Intake 35.500 - 35.516 mm (1.3976 - 1.3983 in)
   Exhaust 31.500 - 31.516 mm (1.2402 - 1.2408 in)

Be sure to ream in circles concentric to the valve guide center. This will enable valve seat to fit correctly.

Simpo PDF Merge and Split Unregistered Version - http://www.simpopdf.com

Inspection (Cont'd)

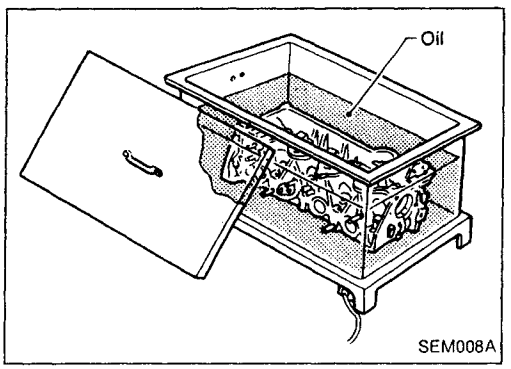

3. Heat cylinder head to 110 to 130°C (230 to 266°F).
4. Press fit valve seat until it seats on the bottom.

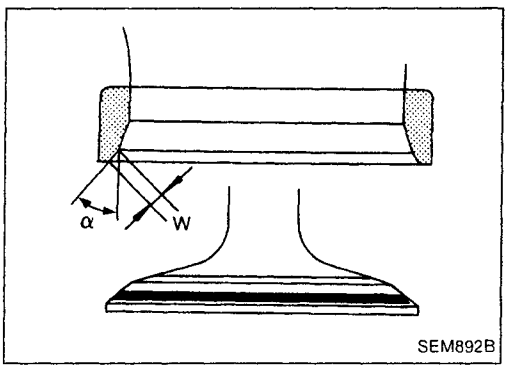

5. Cut or grind valve seat using a suitable tool at the specified dimensions as shown in SDS (EM-165).
6. After cutting, lap valve seat with abrasive compound.
7. Check valve seating condition.

Seat face angle "α":
44°53′ - 45°07′
Contacting width "W":
Intake
1.05 - 1.35 mm (0.0413 - 0.0531 in)
Exhaust
1.25 - 1.55 mm (0.0492 - 0.0610 in)

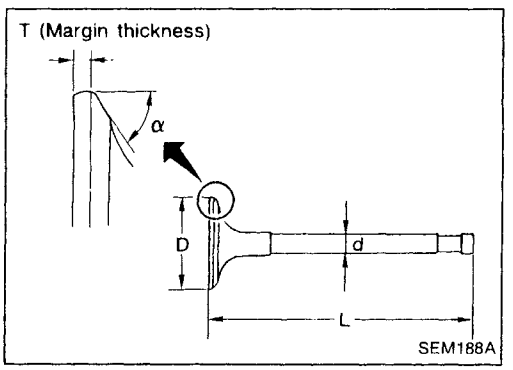

VALVE DIMENSIONS

Check dimensions in each valve. For dimensions, refer to SDS (EM-164).
When valve head has been worn down to 0.5 mm (0.020 in) in margin thickness, replace valve.
Grinding allowance for valve stem tip is 0.2 mm (0.008 in) or less.

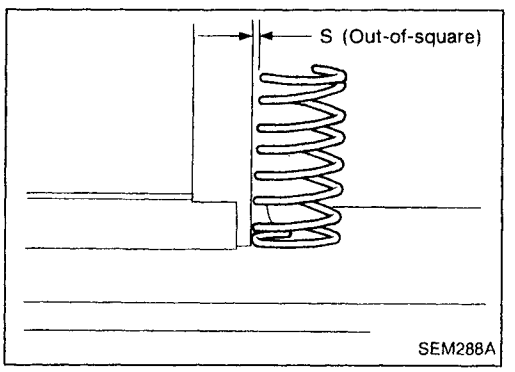

VALVE SPRING

Squareness

1. Measure "S" dimension.
   Out-of-square:
   Less than 2.2 mm (0.087 in)
2. If it exceeds the limit, replace spring.

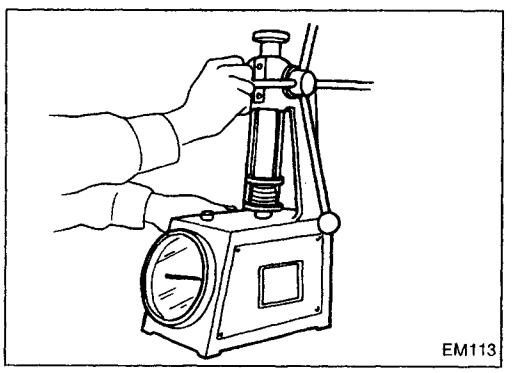

Pressure

Check valve spring pressure.
Pressure: N (kg, lb) at height mm (in)
Standard
578.02 - 641.57 (58.94 - 65.42, 129.96 - 144.25) at 30.0 (1.181)
Limit
More than 549.2 (56.0, 123.5) at 30.0 (1.181)
If it exceeds the limit, replace spring.

Simpo PDF Merge and Split Unregistered Version - http://www.simpopdf.com

Inspection (Cont'd)

HYDRAULIC LASH ADJUSTER

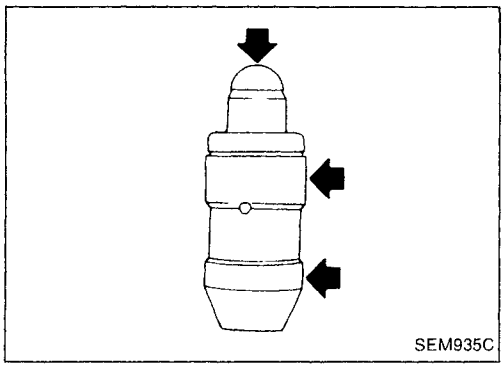
SEM935C

1. Check contact and sliding surfaces for wear or scratches.

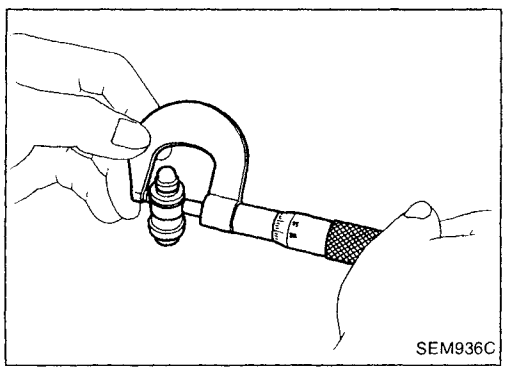
SEM936C

2. Check diameter of lash adjuster.
   Outer diameter:
   16.980 - 16.993 mm (0.6685 - 0.6690 in)

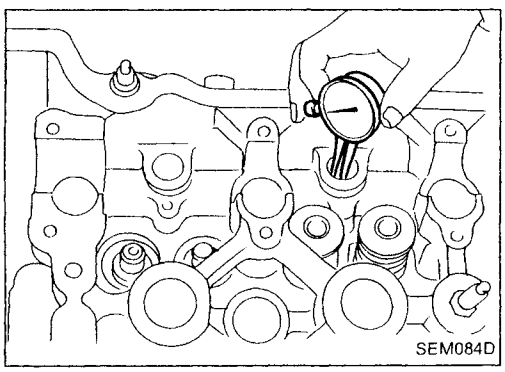
SEM084D

3. Check lash adjuster guide inner diameter.
   Inner diameter:
   17.000 - 17.020 mm (0.6693 - 0.6701 in)
   Standard clearance between lash adjuster and adjuster guide:
   0.007 - 0.040 mm (0.0003 - 0.0016 in)

ROCKER ARM, SHIM AND ROCKER ARM GUIDE

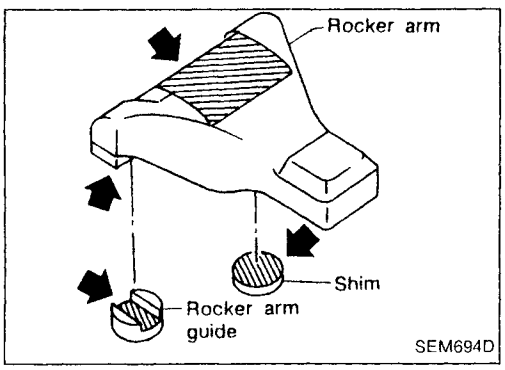

SEM694D

Check contact and sliding surfaces of rocker arms, shims and rocker arm guides for wear or scratches.

Assembly

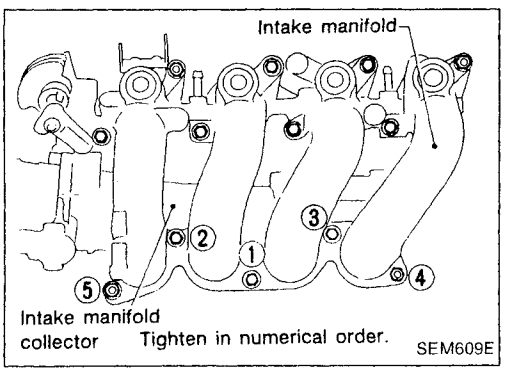

SEM609E

1. Install intake manifold collector to intake manifold.

Simpo PDF Merge and Split Unregistered Version - http://www.simpopdf.com

Assembly (Cont'd)

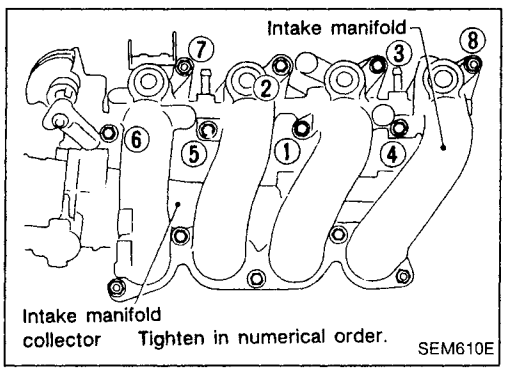

2. Install intake manifold.
3. Install fuel tube assembly.
   Refer to "Injector Removal and Installation" in EC section.

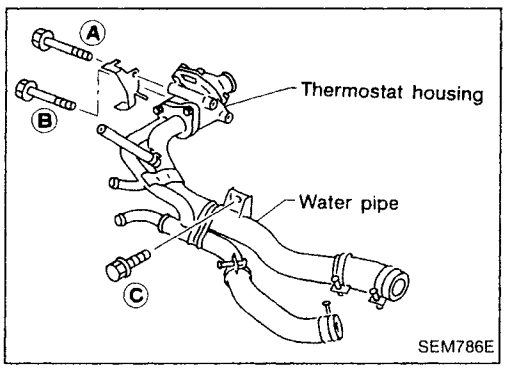

4. Install thermostat housing with water pipe.
- Tightening procedure:

1) Tighten bolt Ⓐ to 2 - 5 N·m (0.2 - 0.5 kg-m, 1.4 - 3.6 ft-lb).
2) Tighten bolt Ⓒ to 16 - 21 N·m (1.6 - 2.1 kg-m, 12 - 15 ft-lb).
3) Tighten bolt Ⓐ to 16 - 21 N·m (1.6 - 2.1 kg-m, 12 - 15 ft-lb).
4) Tighten bolt Ⓑ to 16 - 21 N·m (1.6 - 2.1 kg-m, 12 - 15 ft-lb).

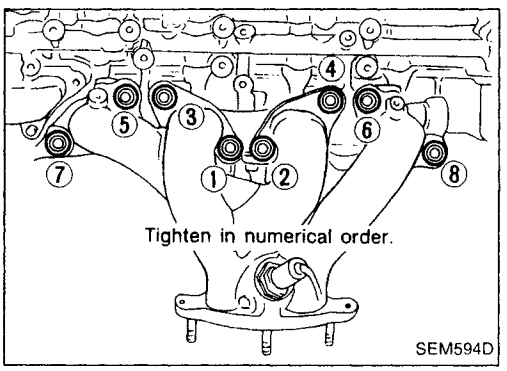

5. Install exhaust manifold.
6. Install exhaust manifold cover.

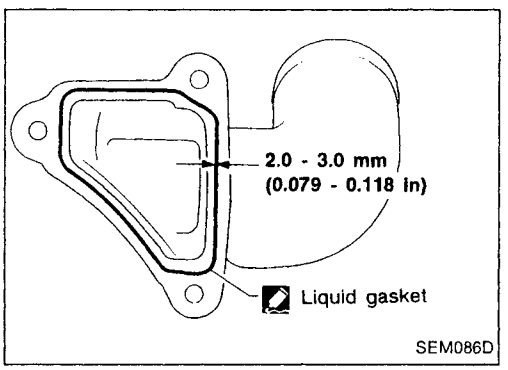

7. Install water outlet.

a. Before installing water outlet, remove all traces of liquid gasket from mating surface using a scraper.
- Also remove traces of liquid gasket from mating surface of cylinder head.

b. Apply a continuous bead of liquid gasket to mating surface of water outlet.
- **Use Genuine Liquid Gasket or equivalent.**

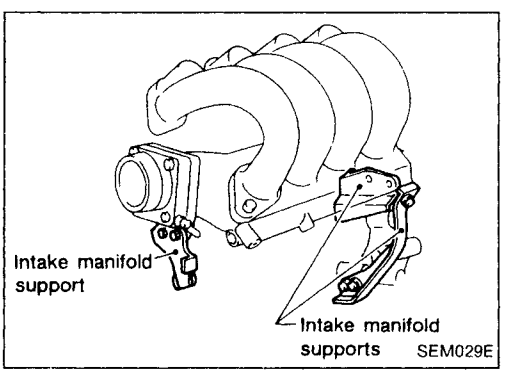

8. Install intake manifold supports.
9. Install crankcase ventilation oil separator.

Simpo PDF Merge and Split Unregistered Version - http://www.simpopdf.com

Assembly (Cont'd)

10. Install valve component parts.

- **Install valves with larger diameter head on the intake side.**

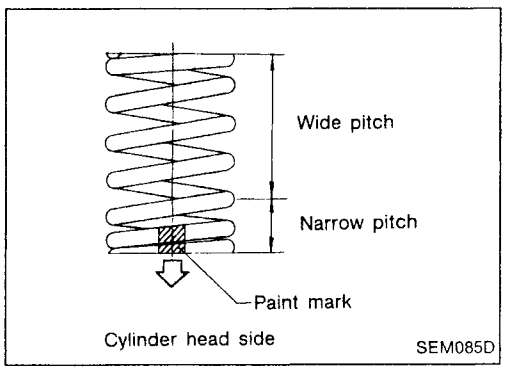

- **Always use new valve oil seal.**
  Refer to OIL SEAL REPLACEMENT.
- **Before installing valve oil seal, install valve spring seat.**
- **Install valve spring (uneven pitch type) with its narrow pitched side toward cylinder head side (paint mark).**
- **After installing valve component parts, tap valve stem tip with plastic hammer to assure a proper fit.**

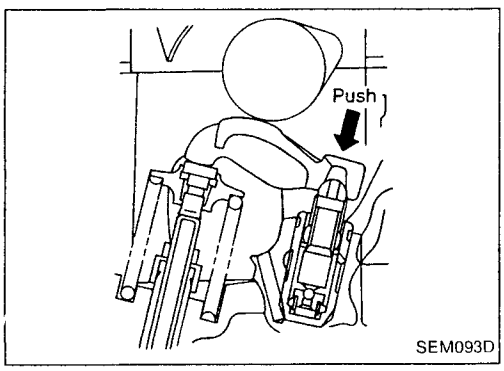

11. Check hydraulic lash adjusters.

a. Push rocker arm at hydraulic lash adjuster location, and see if rocker arm moves. If it moves at least 1 mm (0.04 in), it indicates that there is air in the high pressure chamber. Noise will be emitted from hydraulic lash adjuster if engine is started without bleeding air.

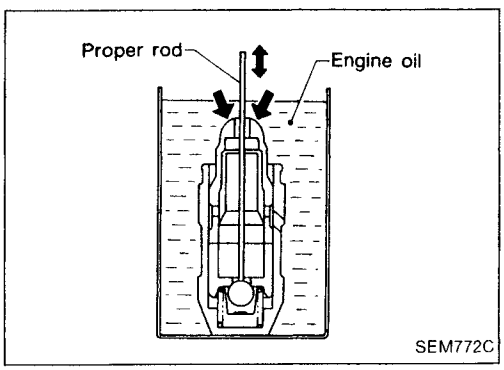

b. Remove hydraulic lash adjuster and dip in a container filled with engine oil. While pushing plunger as shown in figure, lightly push check ball using a thin rod. Air is completely bled when plunger no longer moves.

Air cannot be bled from this type of lash adjuster by running the engine.

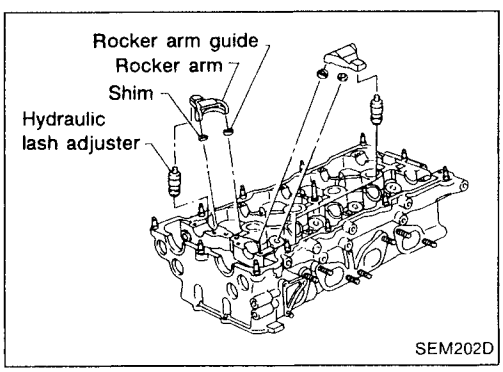

12. Install rocker arms, shims, rocker arm guides and hydraulic lash adjusters.

CAUTION:
Install all parts in their original positions.

Simpo PDF Merge and Split Unregistered Version - http://www.simpopdf.com

Assembly (Cont'd)

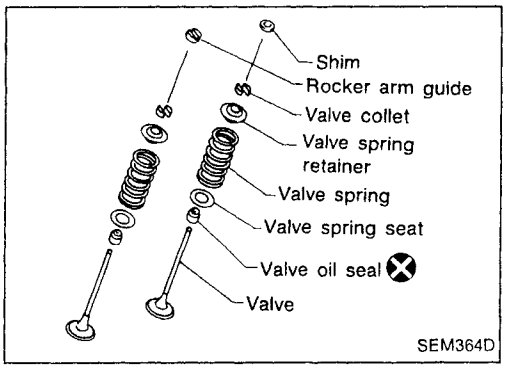

13. Select a suitable shim when replacing any of the following parts with a new one: Cylinder head, shim, rocker arm guide and valve seat. Proceed as follows to select the shim of correct thickness.

a. Install valve component parts to cylinder head (Except shim).

- Always replace rocker arm guide with a new one.

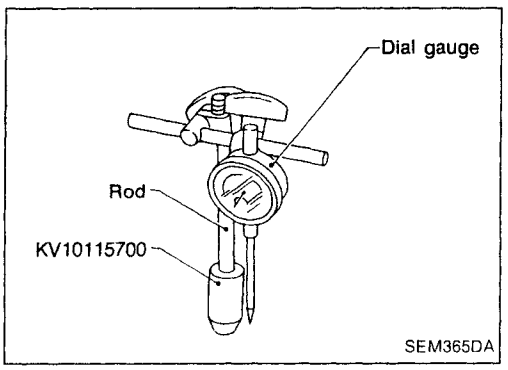

b. Remove hydraulic lash adjuster.

c. Install Tool* into hydraulic lash adjuster fixing hole.

* Tool (KV10115700) is screwed into magnetic stand rod used with dial gauge.

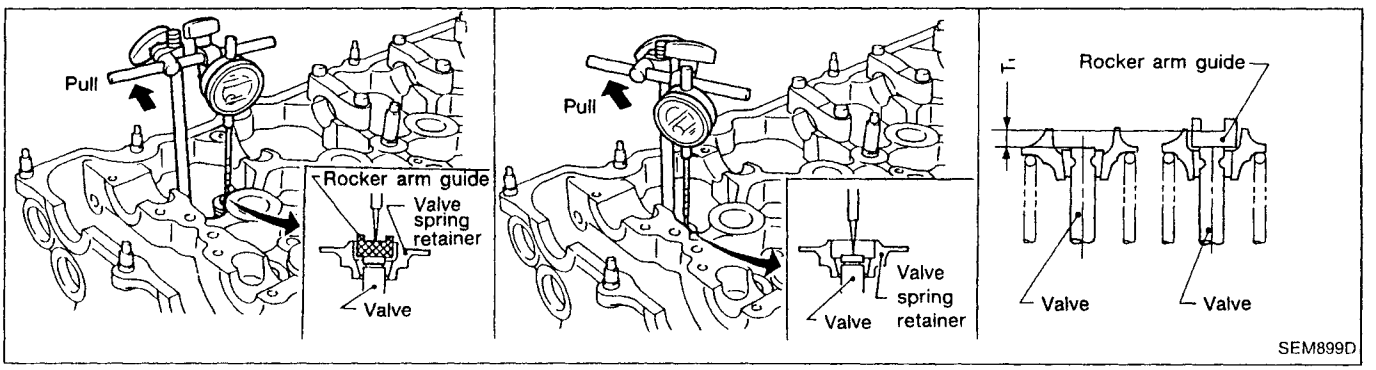

d. Make sure that the following parts are installed to the cylinder head: Valve, valve spring, collet, retainer and rocker arm guide (except shim). Measure difference (T_1) between sliding surface of rocker arm guide and valve stem end on shim side.

When measuring, lightly pull dial indicator rod toward you to eliminate play in Tool (KV10115700).

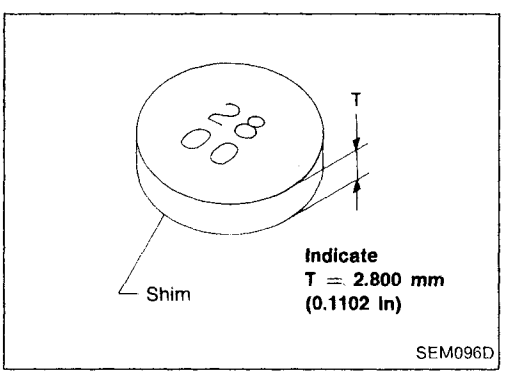

e. Select proper shim.

Shim thickness (T):

$T_1 \pm 0.025$ mm (0.0010 in)

- Shims are available in different thicknesses from 2.800 mm (0.1102 in) to 3.200 mm (0.1260 in) in increments of 0.025 mm (0.0010 in).

Simpo PDF Merge and Split Unregistered Version - http://www.simpopdf.com

Installation

- This installation is the same procedure as those for timing chain. Refer to "Installation" in "TIMING CHAIN" (EM-73).

Simpo PDF Merge and Split Unregistered Version - http://www.simpopdf.com

SEC. 112

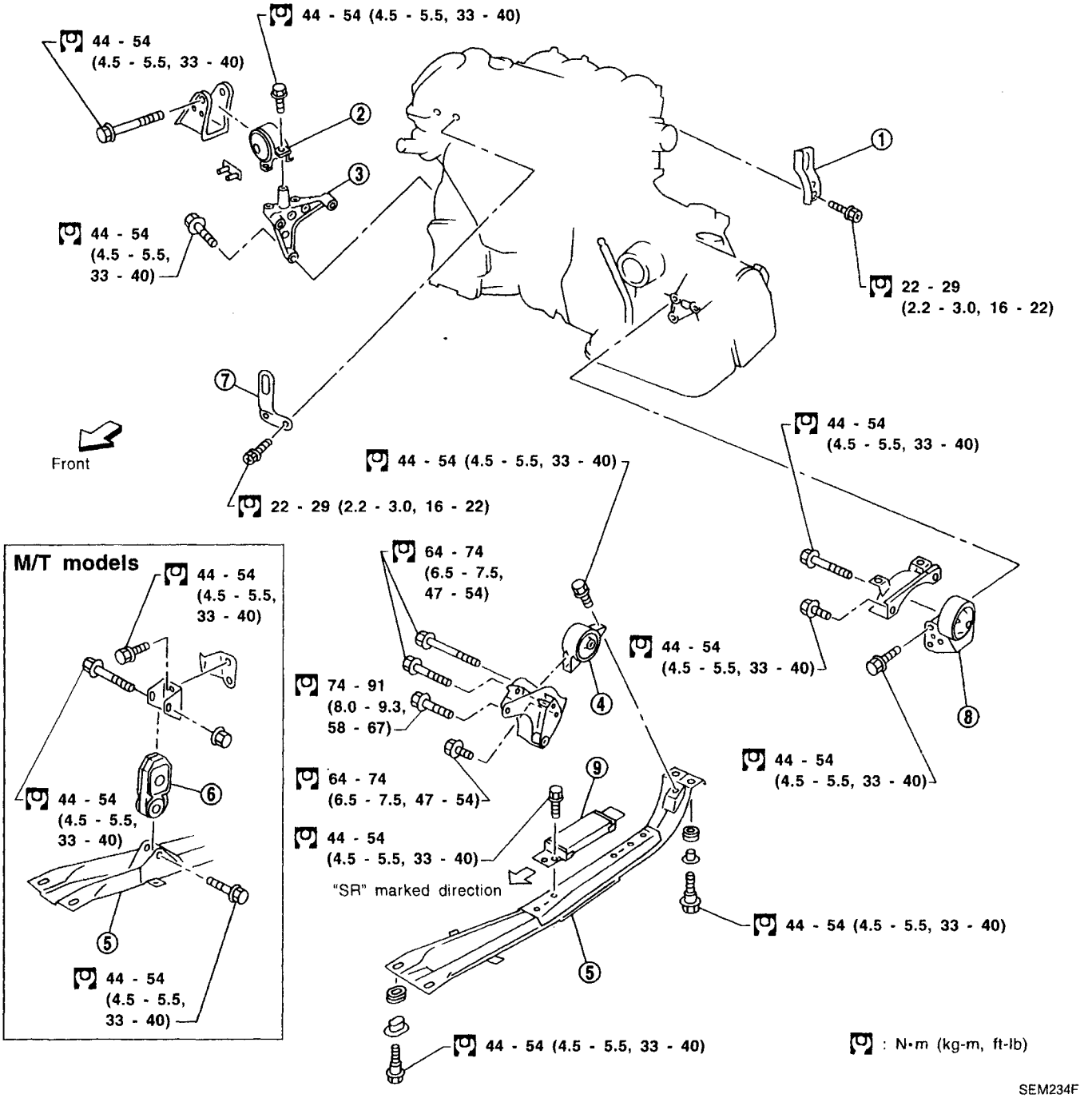

① Rear engine slinger
② Front engine mounting
③ Mounting bracket
④ Rear insulator
⑤ Center member
⑥ Buffer
⑦ Front engine slinger
⑧ Rear engine mounting
⑨ Dynamic damper

Simpo PDF Merge and Split Unregistered Version - http://www.simpopdf.com

WARNING:

- **Situate vehicle on a flat and solid surface.**
- **Place chocks at front and back of rear wheels.**
- **Do not remove engine until exhaust system has completely cooled off.**
  Otherwise, you may burn yourself and/or fire may break out in fuel line.
- **For safety during subsequent steps, the tension of wires should be slackened against the engine.**
- **Before disconnecting fuel hose, release fuel pressure from fuel line.**
  Refer to "Releasing Fuel Pressure" in EC section.
- **Be sure to hoist engine and transaxle in a safe manner.**
- **For engines not equipped with engine slingers, attach proper slingers and bolts described in PARTS CATALOG.**

CAUTION:

- **When lifting engine, be careful not to strike adjacent parts, especially the following: Accelerator wire casing, brake lines, and brake master cylinder.**
- **In hoisting the engine, always use engine slingers in a safe manner.**

Removal

1. Remove engine under cover and hood.
2. Drain coolant from both cylinder block, and radiator.
3. Drain engine oil from drain plug of oil pan.
4. Remove vacuum hoses, fuel hoses, wires, harness and connectors and so on.
5. Remove exhaust tubes, ball joints and drive shafts.
6. Remove radiator and fans.
7. Remove drive belts.
8. Remove alternator, compressor and power steering oil pump from engine.
9. Set a suitable transmission jack under transaxle. Hoist engine with engine slinger.
10. Remove center member.

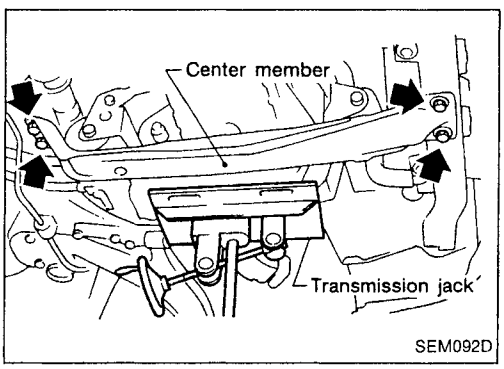

11. Remove engine mounting bolts from both sides and then slowly lower transmission jack.

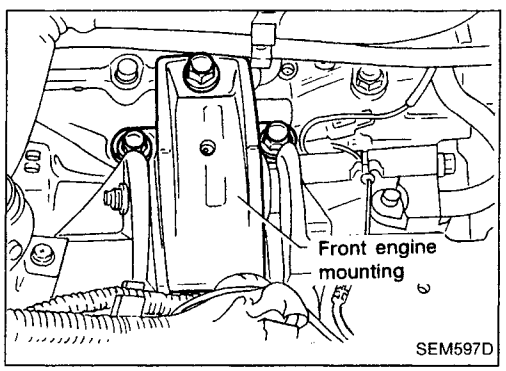

Simpo PDF Merge and Split Unregistered Version - http://www.simpopdf.com

Removal (Cont'd)

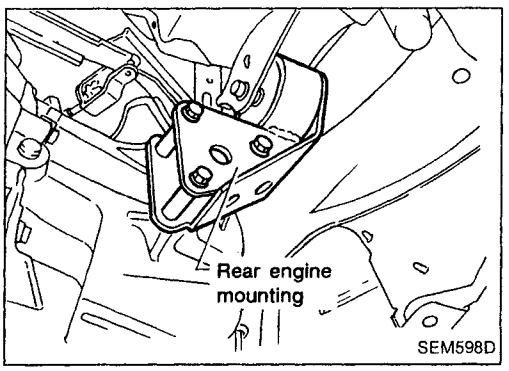

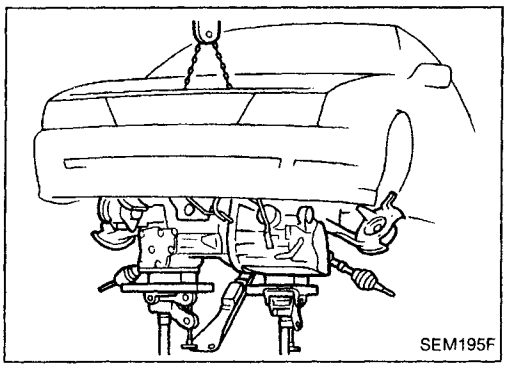

12. Remove engine with transaxle as shown.

Installation

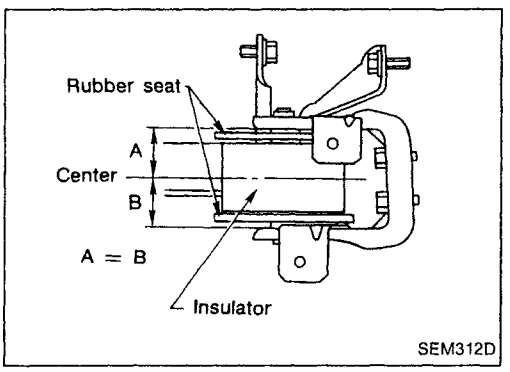

1. Install engine mounting bracket and fixing bolts.

Be sure that insulators are correctly positioned on the brackets.

2. Carefully lower the engine onto engine mounting insulators.

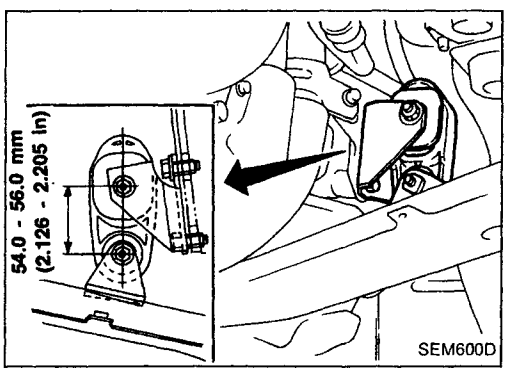

When installing the engine, adjust the height of the engine mounting as shown. (For M/T)

3. Installation is in the reverse order of removal.

Simpo PDF Merge and Split Unregistered Version - http://www.simpopdf.com

SEC. 110•120•150

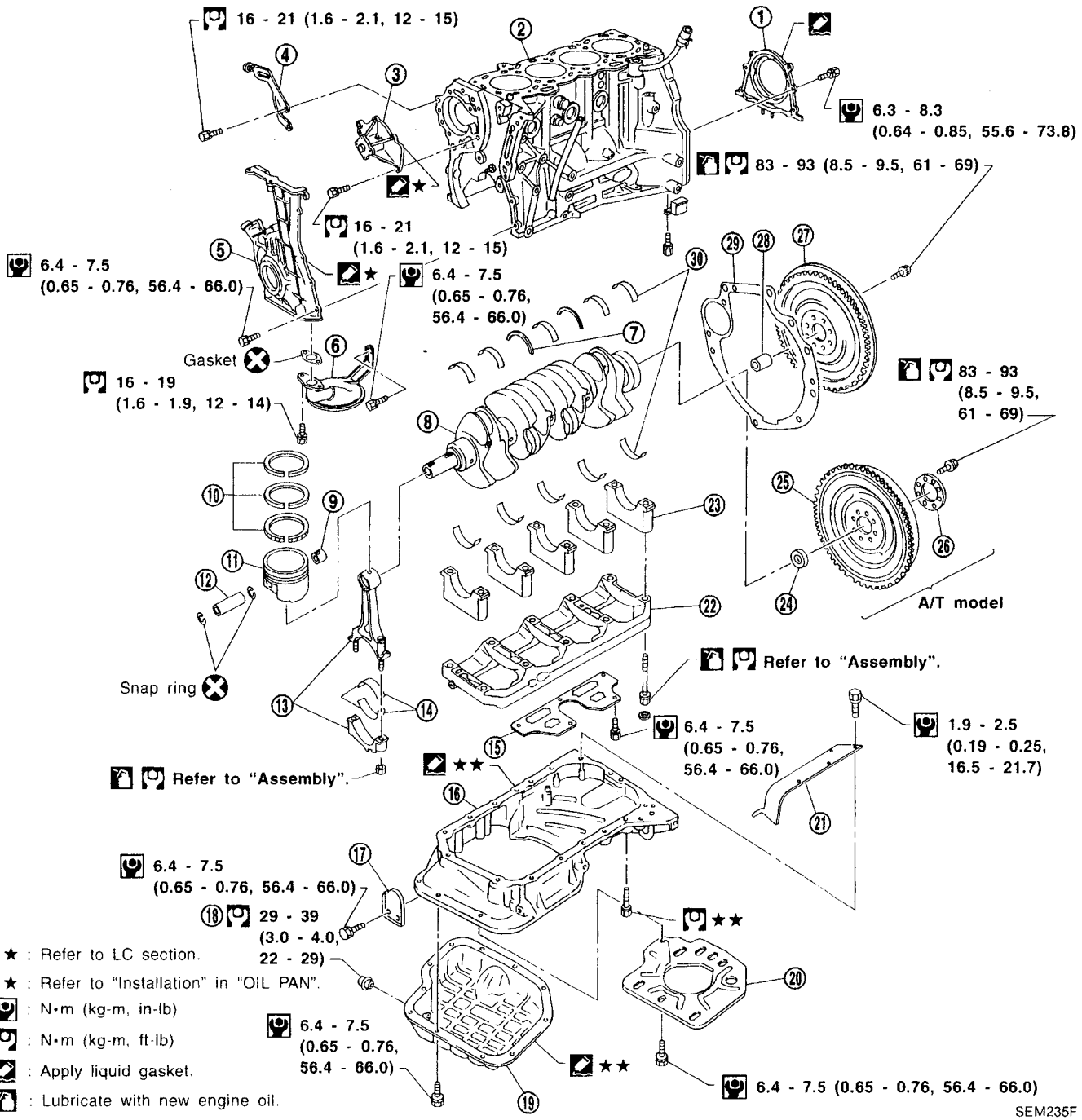

① Rear oil seal retainer
② Cylinder block
③ Water pump
④ Power steering oil pump adjusting bar
⑤ Front cover with oil pump
⑥ Oil strainer
⑦ Thrust bearing
⑧ Crankshaft
⑨ Connecting rod bushing
⑩ Piston rings
⑪ Piston
⑫ Piston pin
⑬ Connecting rod
⑭ Connecting rod bearing
⑮ Baffle plate
⑯ Aluminum oil pan
⑰ Rear cover plate
⑱ Drain plug
⑲ Steel oil pan
⑳ Baffle plate
㉑ Side gallery baffle plate
㉒ Main bearing beam
㉓ Main bearing cap
㉔ Pilot converter
㉕ Drive plate
㉖ Reinforcement plate
㉗ Flywheel
㉘ Pilot bushing
㉙ Rear plate
㉚ Main bearing

Simpo PDF Merge and Split Unregistered Version - http://www.simpopdf.com

CAUTION:
- **When installing sliding parts (bearings, pistons, etc.), apply new engine oil to the sliding surfaces.**
- **Place removed parts such as bearings and bearing caps in their proper order and direction.**
- **Apply new engine oil to bolt thread and seat surfaces when tightening the following: Connecting rod bolts and main bearing cap bolts.**
- **Do not allow any magnetic materials to contact the ring gear teeth of flywheel/drive plate.**

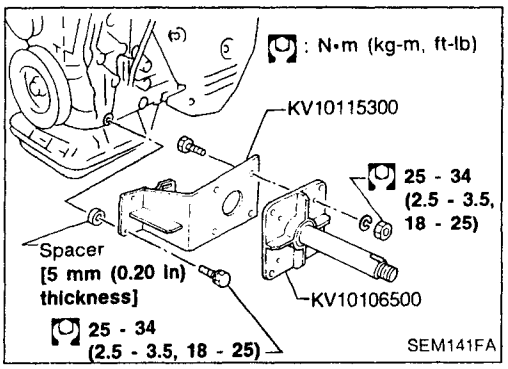

Disassembly

PISTON AND CRANKSHAFT

1. Place engine on a work stand.
2. Remove cylinder head.
   Refer to "Removal" in "TIMING CHAIN" (EM-69).
3. Remove oil pan.
   Refer to "Removal" in "OIL PAN" (EM-63).
4. Remove timing chain.
   Refer to "Removal" in "TIMING CHAIN" (EM-69).

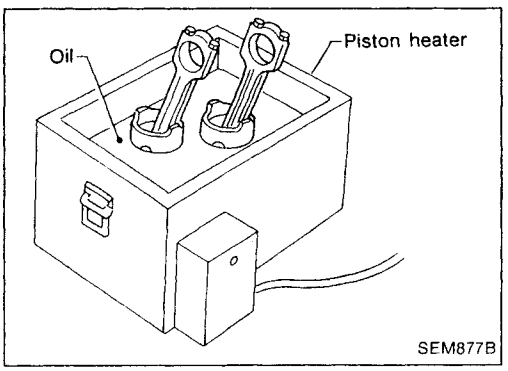

5. Remove pistons with connecting rods.
- When disassembling piston and connecting rod, remove snap ring first. Then heat piston to 60 to 70°C (140 to 158°F), or use piston pin press stand at room temperature.

6. Remove rear oil seal retainer.

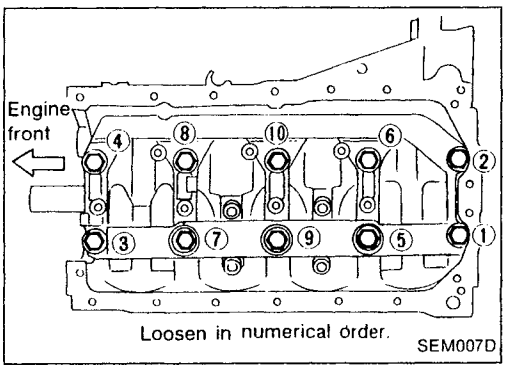

7. Remove bearing beam, bearing cap and crankshaft.
- **Before removing bearing cap, measure crankshaft end play.**
- **Bolts should be loosened in two or three steps.**

Inspection

PISTON AND PISTON PIN CLEARANCE

1. Measure inner diameter of piston pin hole "dp".
   Standard diameter "dp":
   21.987 - 21.999 mm (0.8656 - 0.8661 in)

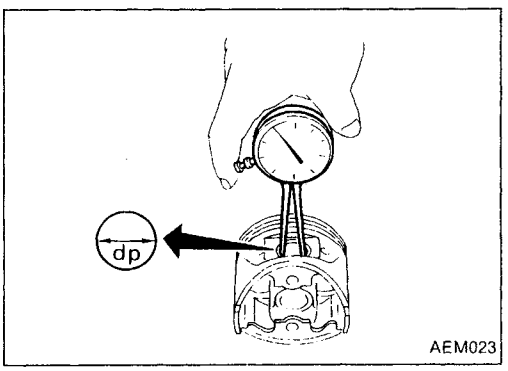

Simpo PDF Merge and Split Unregistered Version - http://www.simpopdf.com

Inspection (Cont'd)

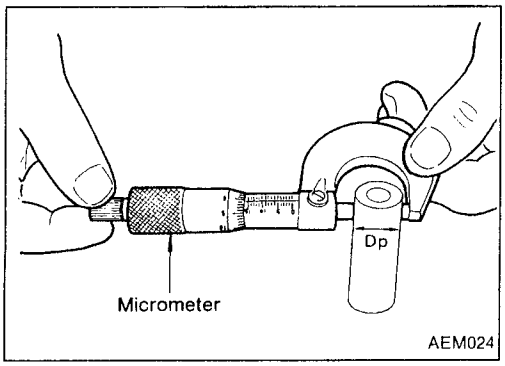

2. Measure outer diameter of piston pin "Dp".
   Standard diameter "Dp":
   21.989 - 22.001 mm (0.8657 - 0.8662 in)
3. Calculate piston pin clearance.
   dp – Dp = –0.004 to 0 mm (–0.0002 to 0 in)
   If it exceeds the above value, replace piston assembly with pin.

EM

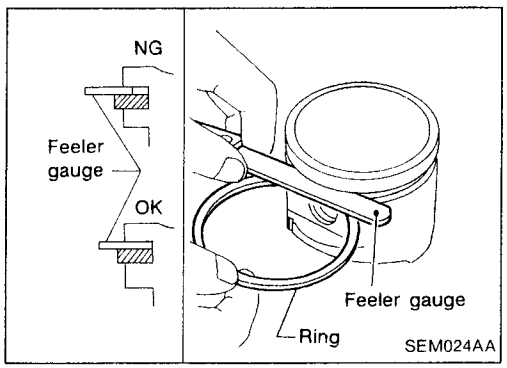

PISTON RING SIDE CLEARANCE

Side clearance:
Top ring 0.045 - 0.080 mm (0.0018 - 0.0031 in)
2nd ring 0.030 - 0.065 (0.0012 - 0.0026 in)
Max. limit of side clearance:
0.2 mm (0.008 in)

If out of specification, replace piston and/or piston ring assembly.

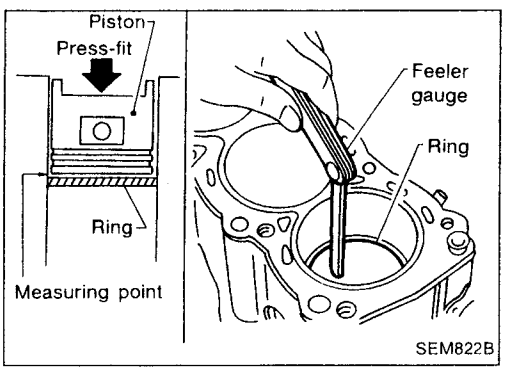

PISTON RING END GAP

End gap:
Top ring 0.20 - 0.30 mm (0.0079 - 0.0118 in)
2nd ring 0.35 - 0.50 mm (0.0138 - 0.0197 in)
Oil ring 0.20 - 0.60 mm (0.0079 - 0.0236 in)
Max. limit of ring gap:
1.0 mm (0.039 in)

If out of specification, replace piston ring. If gap still exceeds the limit even with a new ring, do the following. Rebore cylinder and use over-sized piston and piston rings.
Refer to SDS (EM-168).

- When replacing the piston, inspect cylinder block surface for scratches or seizure. If scratches or seizure are found, hone or replace the cylinder block.

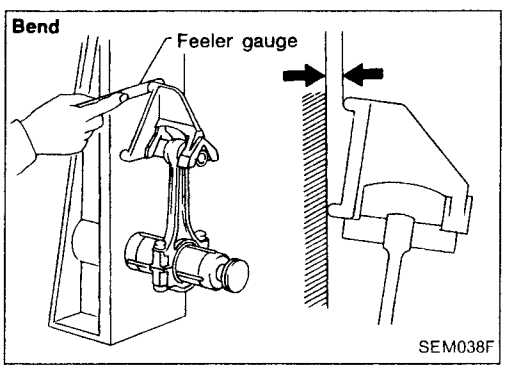

CONNECTING ROD BEND AND TORSION

Bend:
Limit 0.15 mm (0.0059 in)
per 100 mm (3.94 in) length
Torsion:
Limit 0.30 mm (0.0118 in)
per 100 mm (3.94 in) length

If it exceeds the limit, replace connecting rod assembly.

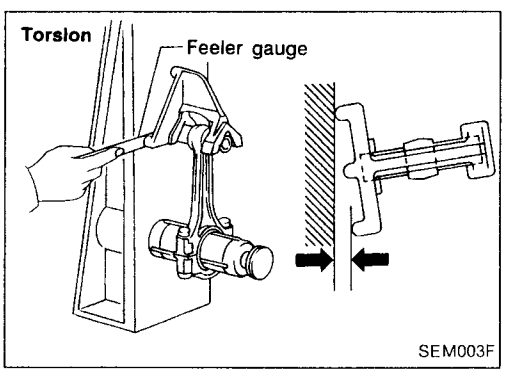

Simpo PDF Merge and Split Unregistered Version - http://www.simpopdf.com

Inspection (Cont'd)

CYLINDER BLOCK DISTORTION AND WEAR

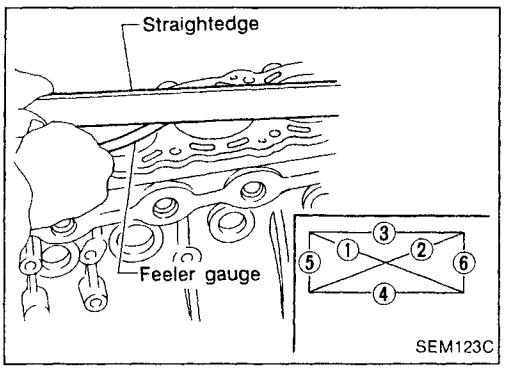

1. Clean upper face of cylinder block and measure the distortion.
   Standard:
   Less than 0.03 mm (0.0012 in)
   Limit:
   0.10 mm (0.0039 in)
2. If out of specification, resurface it.
   The resurfacing limit is determined by cylinder head resurfacing in engine.

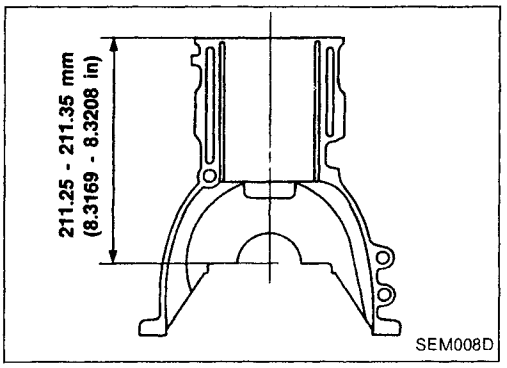

Amount of cylinder head resurfacing is "A".
Amount of cylinder block resurfacing is "B".
The maximum limit is as follows:
A + B = 0.2 mm (0.008 in)
Nominal cylinder block height from crankshaft center:
211.25 - 211.35 mm (8.3169 - 8.3208 in)

3. If necessary, replace cylinder block.

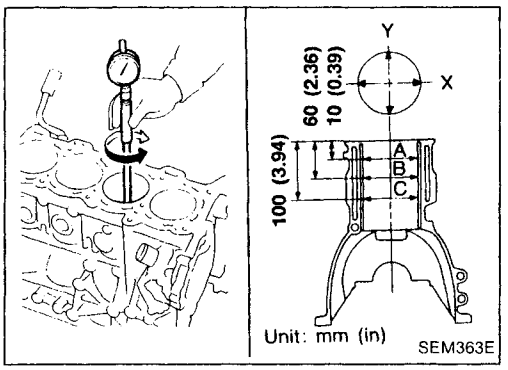

PISTON-TO-BORE CLEARANCE

1. Using a bore gauge, measure cylinder bore for wear, out-of-round and taper.
   Standard inner diameter:
   86.000 - 86.030 mm (3.3858 - 3.3870 in)
   Wear limit: 0.20 mm (0.0079 in)
   If it exceeds the limit, rebore all cylinders. Replace cylinder block if necessary.
   Out-of-round (X – Y) standard:
   Less than 0.015 mm (0.0006 in)
   Taper (A – B and A – C) standard:
   Less than 0.010 mm (0.0004 in)
2. Check for scratches and seizure. If seizure is found, hone it.

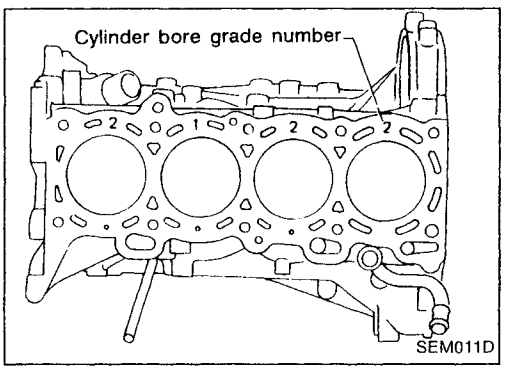

- **When replacing both cylinder block and piston with new ones, select piston making sure of grade numbers. Piston grade number should be the same as the grade number punched on cylinder block upper surface.**

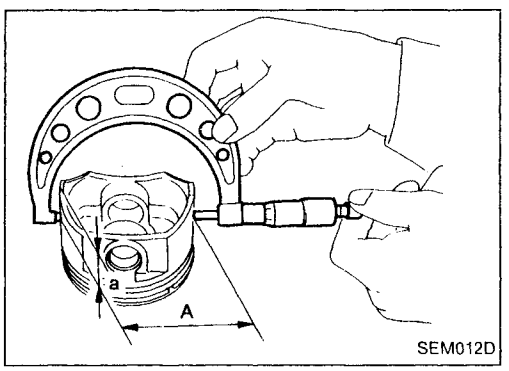

3. Measure piston skirt diameter.
   Piston diameter "A": Refer to SDS (EM-168).
   Measuring point "a" (Distance from the bottom):
   14.0 mm (0.551 in)
4. Check that piston-to-bore clearance is within specification.
   Piston-to-bore clearance "B":
   0.010 - 0.030 mm (0.0004 - 0.0012 in)
5. Determine piston oversize according to amount of cylinder wear.

Oversize pistons are available for service. Refer to SDS (EM-168).

Simpo PDF Merge and Split Unregistered Version - http://www.simpopdf.com

Inspection (Cont'd)

6. Cylinder bore size is determined by adding piston-to-bore clearance to piston diameter "A".
   Rebored size calculation:
   D = A + B – C
   where,
   D: Bored diameter
   A: Piston diameter as measured
   B: Piston-to-bore clearance
   C: Honing allowance 0.02 mm (0.0008 in)
7. Install main bearing caps, and tighten to the specified torque.

- **Otherwise, cylinder bores may be distorted in final assembly.**

8. Cut cylinder bores.

- **When any cylinder needs boring, all other cylinders must also be bored.**
- **Do not cut too much out of cylinder bore at a time. Cut only 0.05 mm (0.0020 in) or so in diameter at a time.**

9. Hone cylinders to obtain specified piston-to-bore clearance.
10. Measure finished cylinder bore for out-of-round and taper.

- **Measurement should be done after cylinder bore cools down.**

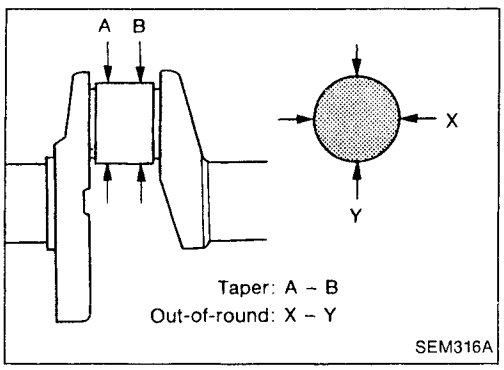

CRANKSHAFT

1. Check crankshaft main and pin journals for score, wear or cracks.
2. With a micrometer, measure journals for taper and out-of-round.
   Out-of-round (X – Y) standard:
   Main journal:
   Less than 0.005 mm (0.0002 in)
   Pin journal:
   Less than 0.0Q5 mm (0.0001 in)
   Taper (A – B) standard:
   Main journal:
   Less than 0.005 mm (0.0002 in)
   Pin journal:
   Less than 0.0025 mm (0.0001 in)

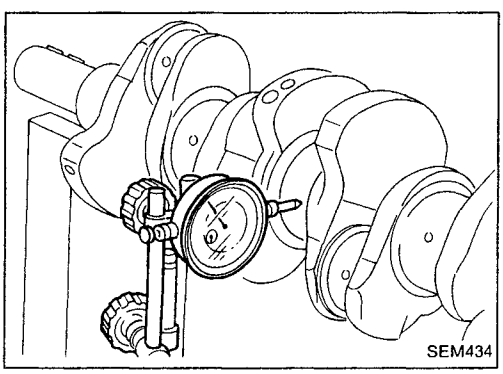

3. Measure crankshaft runout.
   Runout (Total indicator reading) limit:
   Less than 0.05 mm (0.0020 in)

Simpo PDF Merge and Split Unregistered Version - http://www.simpopdf.com

Inspection (Cont'd)

BEARING CLEARANCE

- Use either of the following two methods, however, method "A" gives more reliable results and is preferred.

Method A (Using bore gauge & micrometer)

Main bearing

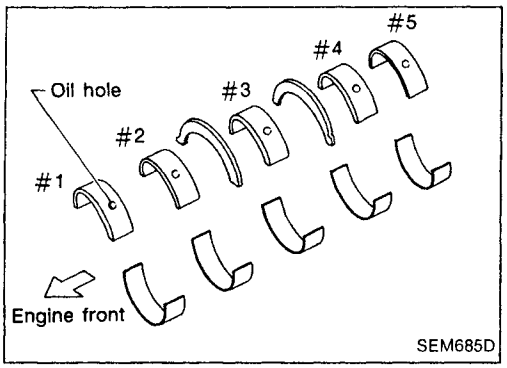

1. Set main bearings in their proper positions on cylinder block and main bearing cap.

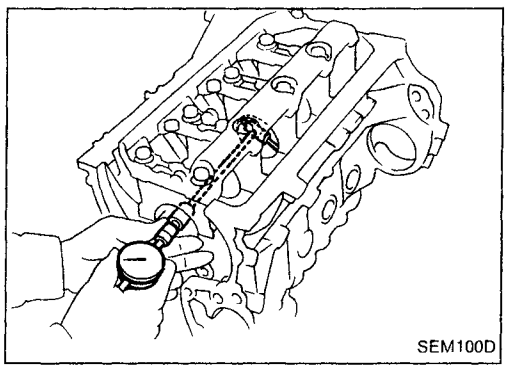

2. Install main bearing cap and main bearing beam to cylinder block.

Tighten all bolts in correct order in two or three stages.

3. Measure inner diameter "A" of each main bearing.

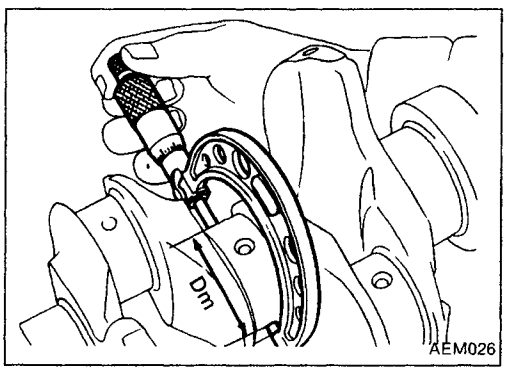

4. Measure outer diameter "Dm" of each crankshaft main journal.
5. Calculate main bearing clearance.
   Main bearing clearance = A – Dm
   Standard: 0.004 - 0.022 mm (0.0002 - 0.0009 in)
   Limit: 0.050 mm (0.0020 in)
6. If it exceeds the limit, replace bearing.
7. If clearance cannot be adjusted within the standard of any bearing, grind crankshaft journal and use undersized bearing.

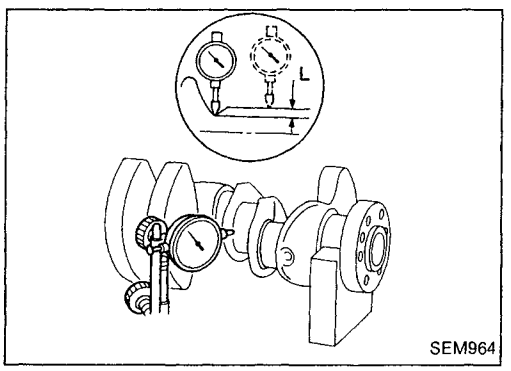

a. When grinding crankshaft journal, confirm that "L" dimension in fillet roll is more than the specified limit.
   "L": 0.1 mm (0.004 in)
b. Refer to SDS for grinding crankshaft and available service parts.

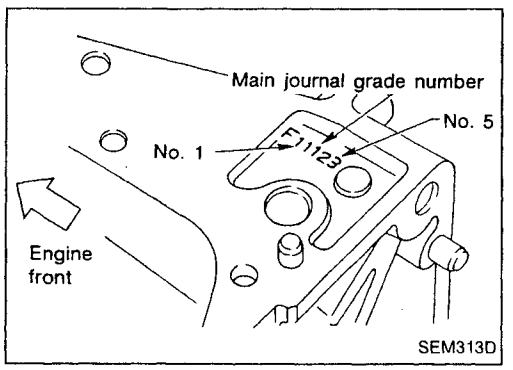

8. If crankshaft is reused, measure main bearing clearances and select thickness of main bearings.
   If crankshaft is replaced with a new one, select thickness of main bearings as follows:

a. Grade number of each cylinder block main journal is punched on the respective cylinder block. These numbers are punched in either Arabic or Roman numerals.

Simpo PDF Merge and Split Unregistered Version - http://www.simpopdf.com

Inspection (Cont'd)

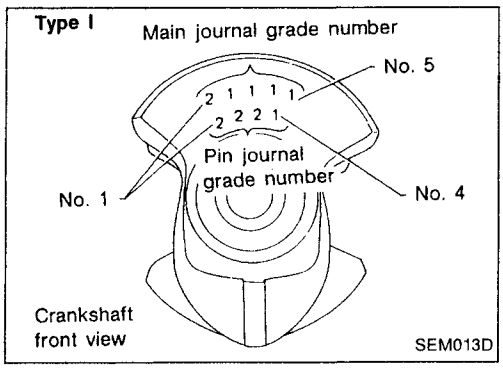

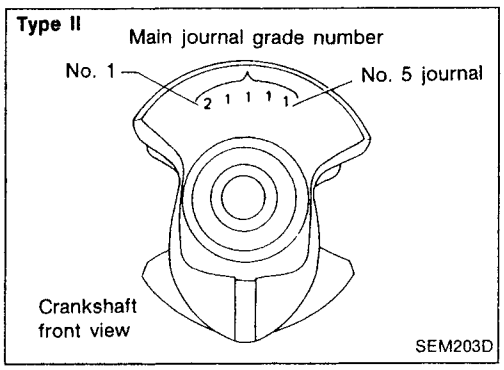

b. Grade number of each crankshaft main journal is punched on the respective crankshaft. These numbers are punched in either Arabic or Roman numerals.
c. Select main bearing with suitable thickness according to the following table.

How to select main bearings (Identification mark and color)

Crankshaft main journal grade number	Cylinder block main journal grade number			
	0	1	2	3
0	0 (A, Black)	1 (B, Brown)	2 (C, Green)	3 (D, Yellow)
1	1 (B, Brown)	2 (C, Green)	3 (D, Yellow)	4 (E, Blue)
2	2 (C, Green)	3 (D, Yellow)	4 (E, Blue)	5 (F, Pink)
3	3 (D, Yellow)	4 (E, Blue)	5 (F, Pink)	6 (G, No color)

For example:
Main journal grade number: 1
Crankshaft journal grade number: 2
Main bearing grade number = 1 + 2
= 3 (D, Yellow)

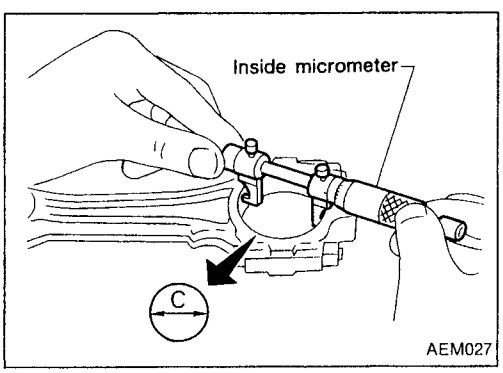

Connecting rod bearing (Big end)

1. Install connecting rod bearing to connecting rod and cap.
2. Install connecting rod cap to connecting rod.

Tighten bolts to the specified torque.

3. Measure inner diameter "C" of each bearing.

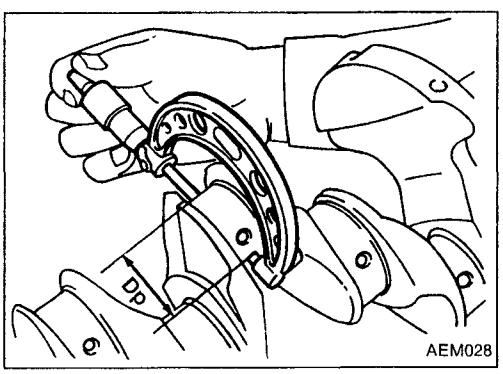

4. Measure outer diameter "Dp" of each crankshaft pin journal.
5. Calculate connecting rod bearing clearance.
   Connecting rod bearing clearance = C – Dp
   Standard: 0.020 - 0.045 mm (0.0008 - 0.0018 in)
   Limit: 0.065 mm (0.0026 in)
6. If it exceeds the limit, replace bearing.
7. If clearance cannot be adjusted within the standard of any bearing, grind crankshaft journal and use undersized bearing. Refer to step 7 of "BEARING CLEARANCE — Main bearing" (EM-106).

Simpo PDF Merge and Split Unregistered Version - http://www.simpopdf.com

Inspection (Cont'd)

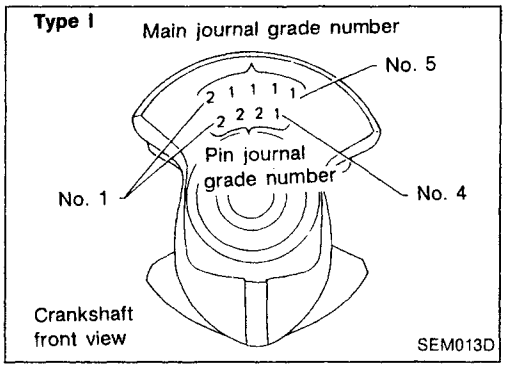

8. If crankshaft is replaced with a new one, select connecting rod bearing according to the following table.

Connecting rod bearing grade number:

These numbers are punched in either Arabic or Roman numerals.

Crank pin grade number	Connecting rod bearing grade number
0	0
1	1
2	2

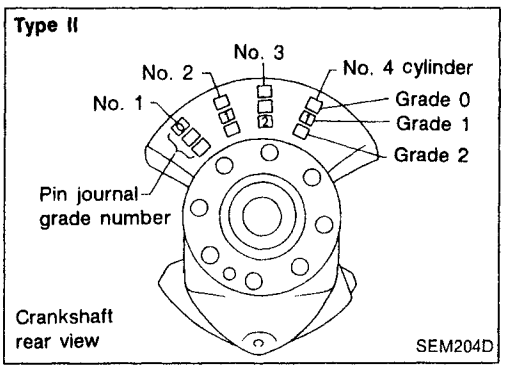

Identification color:

Grade 0; No color
Grade 1; Black
Grade 2; Brown

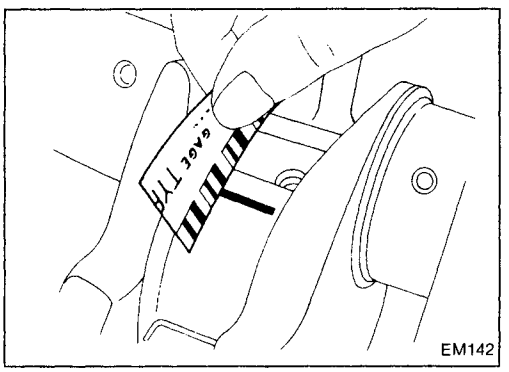

Method B (Using plastigage)

CAUTION:

- **Do not turn crankshaft or connecting rod while plastigage is being inserted.**
- **When bearing clearance exceeds the specified limit, ensure that the proper bearing has been installed. If incorrect bearing clearance exists, use a thicker or undersized main bearing to ensure specified clearance.**

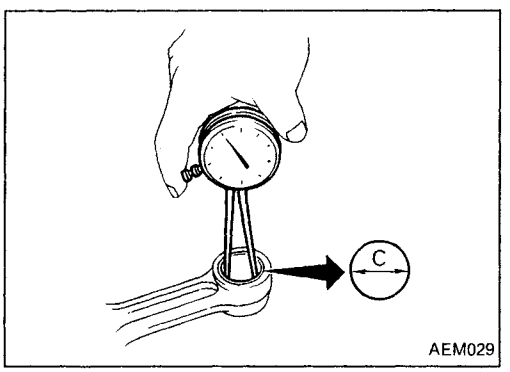

CONNECTING ROD BUSHING CLEARANCE (Small end)

1. Measure inner diameter "C" of bushing.

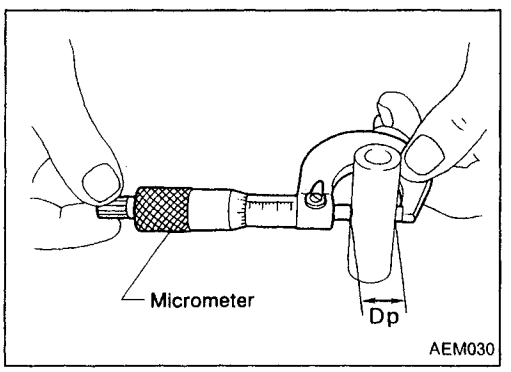

2. Measure outer diameter "Dp" of piston pin.
3. Calculate connecting rod bushing clearance.

Connecting rod bushing clearance = C – Dp

Standard:

0.005 - 0.017 mm (0.0002 - 0.0007 in)

Limit:

0.023 mm (0.0009 in)

If it exceeds the limit, replace connecting rod assembly or connecting rod bushing and/or piston set with pin.

Simpo PDF Merge and Split Unregistered Version - http://www.simpopdf.com

Inspection (Cont'd)

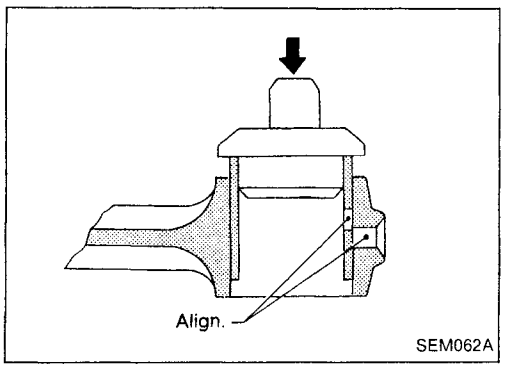

REPLACEMENT OF CONNECTING ROD BUSHING (Small end)

1. Drive in small end bushing until it is flush with end surface of rod.

Be sure to align the oil holes.

2. After driving in small end bushing, ream the bushing. This is to ensure the clearance between connecting rod bushing and piston pin is the specified value.

Clearance between connecting rod bushing and piston pin:

0.005 - 0.017 mm (0.0002 - 0.0007 in)

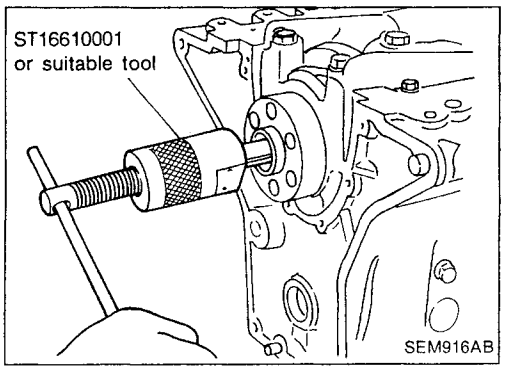

REPLACEMENT OF PILOT BUSHING (M/T) OR PILOT CONVERTER (A/T)

1. Remove pilot bushing or pilot converter using Tool or suitable tool.

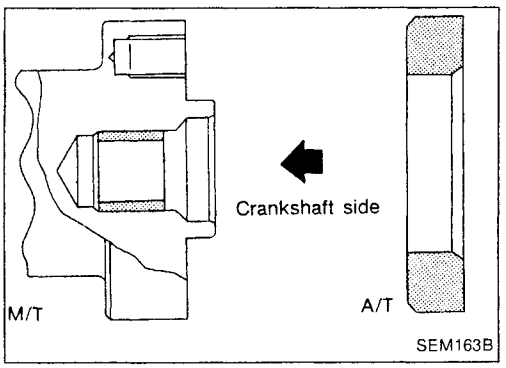

2. Install pilot bushing or pilot converter as shown.

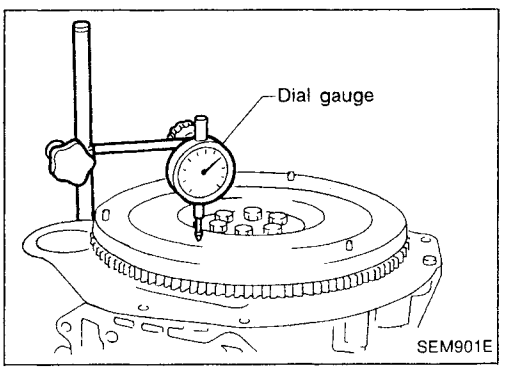

FLYWHEEL/DRIVE PLATE RUNOUT

Runout (Total indicator reading):

Flywheel (M/T model)

Less than 0.15 mm (0.0059 in)

Drive plate (A/T model)

Less than 0.20 mm (0.0079 in)

CAUTION:

Do not allow any magnetic materials to contact the ring gear teeth.

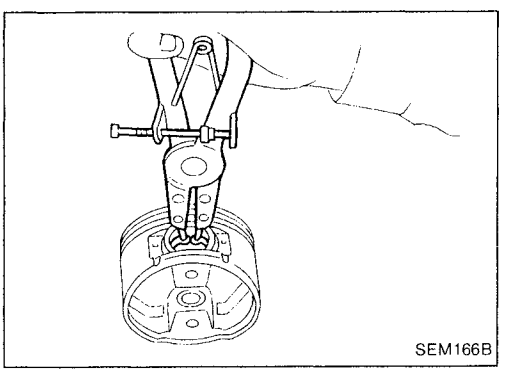

Assembly

PISTON

1. Install new snap ring on one side of piston pin hole.

Simpo PDF Merge and Split Unregistered Version - http://www.simpopdf.com

Assembly (Cont'd)

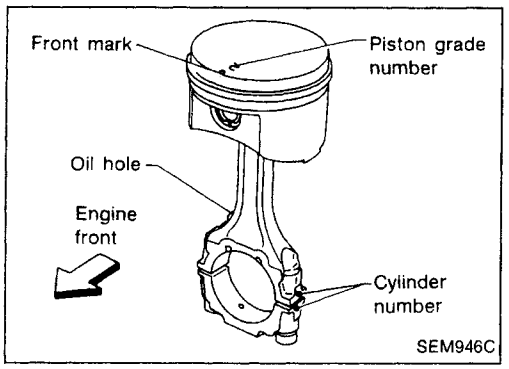

2. Heat piston to 60 to 70°C (140 to 158°F) and assemble piston, piston pin, connecting rod and new snap ring.

- **Align the direction of piston and connecting rod.**
- **Numbers stamped on connecting rod and cap correspond to each cylinder.**
- **After assembly, make sure connecting rod swings smoothly.**

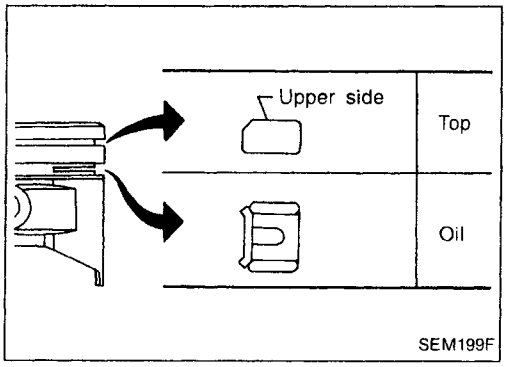

3. Set piston rings as shown.

CAUTION:

- **When piston rings are not replaced, make sure that piston rings are mounted in their original positions.**
- **When replacing piston rings, those without punchmarks can be mounted with either side up.**

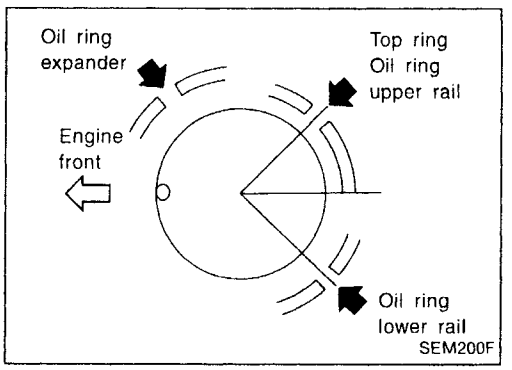

CRANKSHAFT

1. Set main bearings in their proper positions on cylinder block and main bearing cap.

- **Confirm that correct main bearings are used. Refer to "Inspection" of this section.**
- **Apply new engine oil to bearing surfaces.**

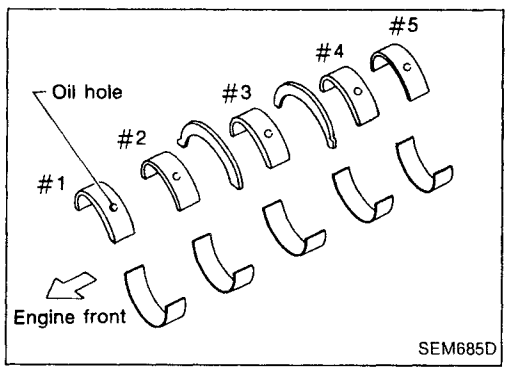

Simpo PDF Merge and Split Unregistered Version - http://www.simpopdf.com

Assembly (Cont'd)

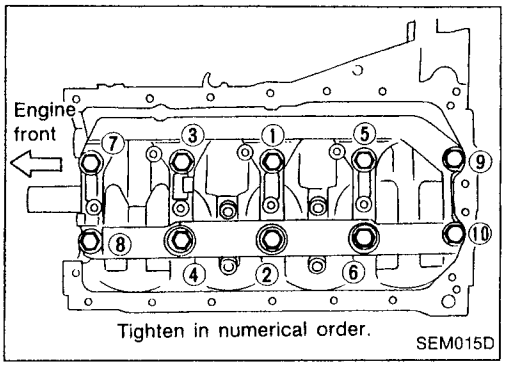

2. Install crankshaft and main bearing caps and tighten bolts to the specified torque.

- **Apply new engine oil to thread of bearing cap bolts.**
- **Prior to tightening bearing cap bolts, shift crankshaft back and forth to properly seat the bearing cap.**
- **Tightening procedure**

a. **Tighten all bolts to 26 to 32 N·m (2.7 to 3.3 kg-m, 20 to 24 in-lb).**
b. **Turn all bolts 75 to 80 degrees clockwise with Tool or suitable angle wrench.**
c. **Loosen all bolts completely.**
d. **Tighten all bolts to 32 to 38 N·m (3.3 to 3.9 kg-m, 24 to 28 ft-lb).**
e. **Turn all bolts 45 to 50 degrees clockwise with Tool or suitable angle wrench.**

- **If an angle wrench is not available, mark all bearing cap bolts on the side facing engine rear. Then, turn each bolt specified degrees clockwise. Confirm angle of degrees with a graduator, not by eye-measurement.**
- **After securing bearing cap bolts, make sure crankshaft turns smoothly by hand.**

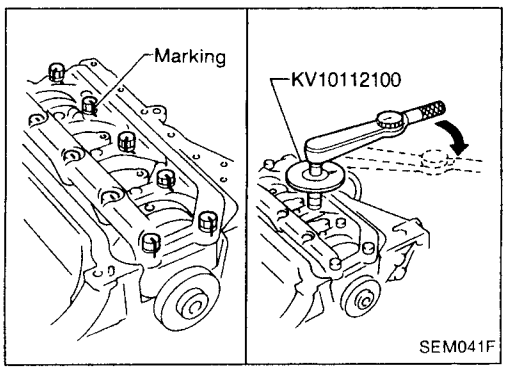

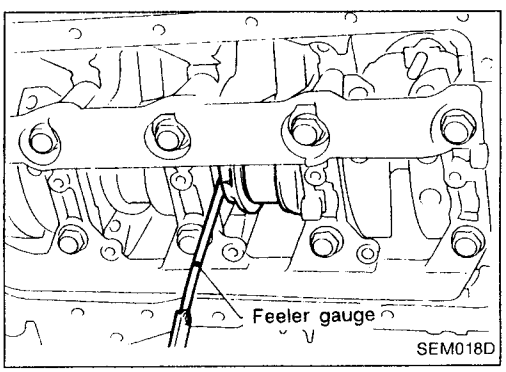

3. Measure crankshaft end play.

Crankshaft end play:
Standard
0.10 - 0.26 mm (0.0039 - 0.0102 in)
Limit
0.30 mm (0.0118 in)

If beyond the limit, replace thrust bearings with new ones.

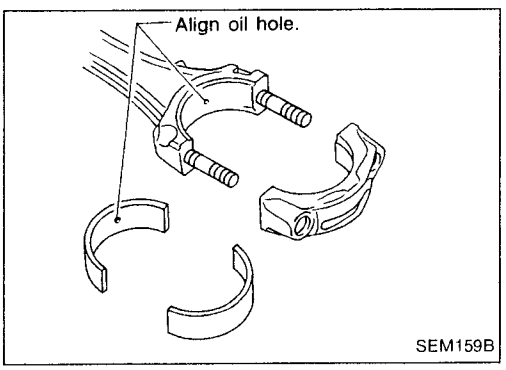

4. Install connecting rod bearings in connecting rods and connecting rod caps.

- **Confirm that correct bearings are used. Refer to "Inspection".**
- **Install bearings so that oil hole in connecting rod aligns with oil hole of bearing.**
- **Apply new engine oil to bolt threads and bearing surfaces.**

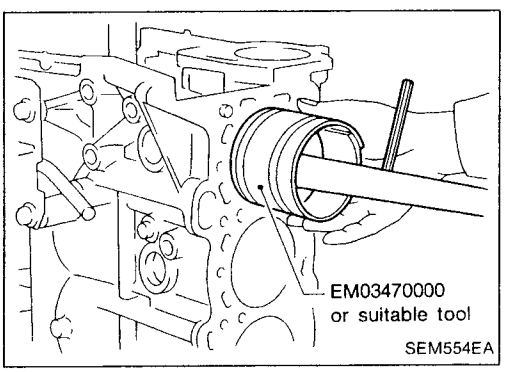

5. Install pistons with connecting rods.

a. Install them into corresponding cylinders with Tool.

- **Be careful not to scratch cylinder wall by connecting rod.**
- **Arrange so that front mark on piston head faces toward front of engine.**
- **Apply new engine oil to piston rings and sliding surface of piston.**

Simpo PDF Merge and Split Unregistered Version - http://www.simpopdf.com

Assembly (Cont'd)

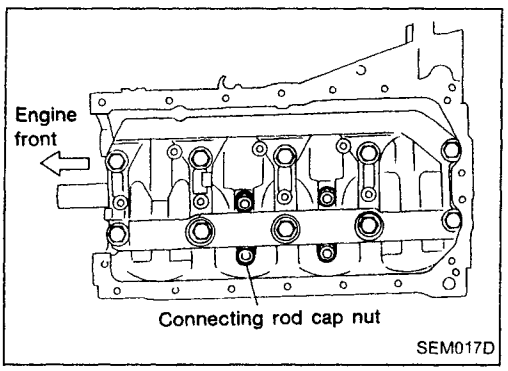

b. Install connecting rod caps.
Tighten connecting rod cap nuts to the specified torque.
Tightening procedure:
1) Tighten nuts to 14 to 16 N·m (1.4 to 1.6 kg-m, 10 to 12 ft-lb).
2) Turn nuts 60 to 65 degrees clockwise with angle wrench. If angle wrench is not available, tighten nuts to 38 to 44 N·m (3.9 to 4.5 kg-m, 28 to 33 ft-lb).

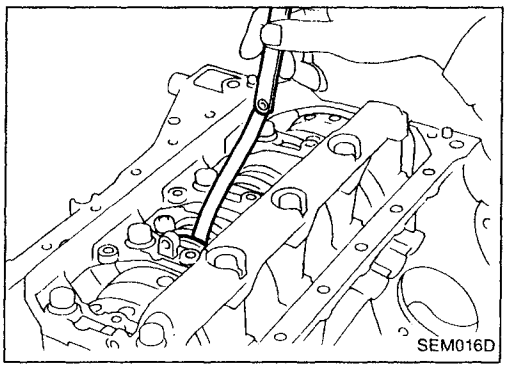

6. Measure connecting rod side clearance.
Connecting rod side clearance:
Standard
0.20 - 0.35 mm (0.0079 - 0.0138 in)
Limit
0.50 mm (0.0197 in)
If beyond the limit, replace connecting rod and/or crankshaft.

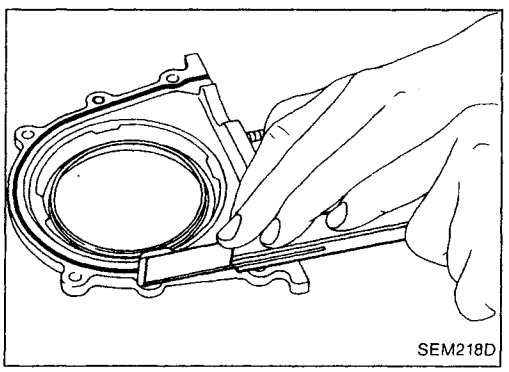

7. Install rear oil seal retainer.
a. Before installing rear oil seal retainer, remove all traces of liquid gasket from mating surface using a scraper.
- Also remove traces of liquid gasket from mating surface of cylinder block.

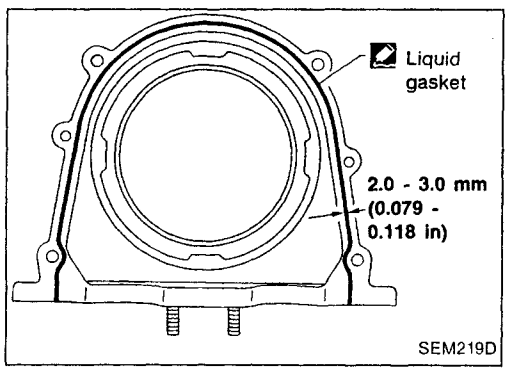

b. Apply a continuous bead of liquid gasket to mating surface of rear oil seal retainer.
- Use Genuine Liquid Gasket or equivalent.

Simpo PDF Merge and Split Unregistered Version - http://www.simpopdf.com

Right side

SEC. 130•135•185•186•210•213•233

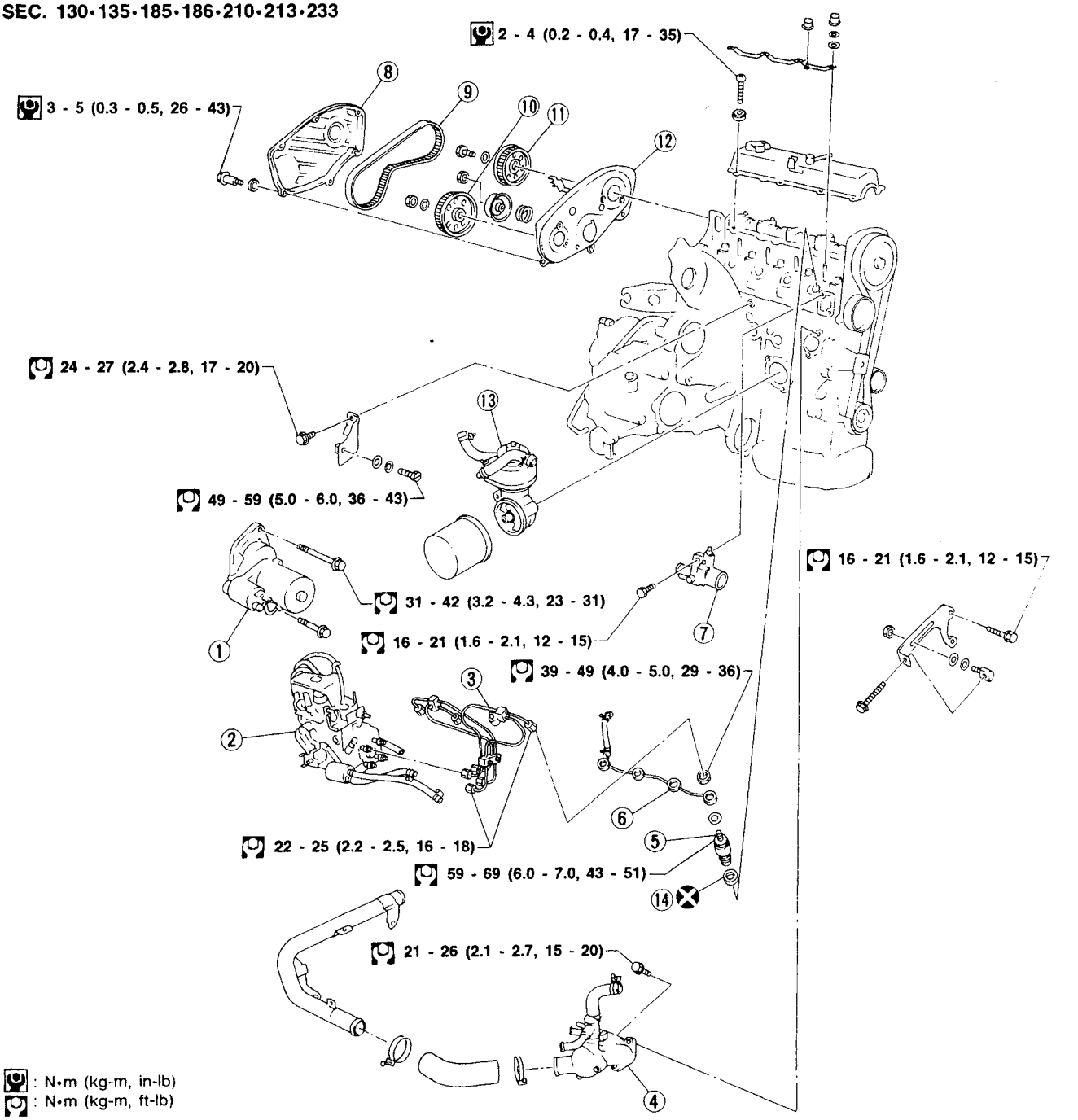

① Starter motor
② Injection pump
③ Injection tube
④ Thermostat housing
⑤ Injection nozzle
⑥ Spill tube
⑦ Water outlet
⑧ Belt cover
⑨ Timing belt
⑩ Injection pump sprocket
⑪ Rear camshaft sprocket
⑫ Rear back cover
⑬ Oil cooler
⑭ Gasket

Simpo PDF Merge and Split Unregistered Version - http://www.simpopdf.com

Left side

SEC. 120·135·140·210·230

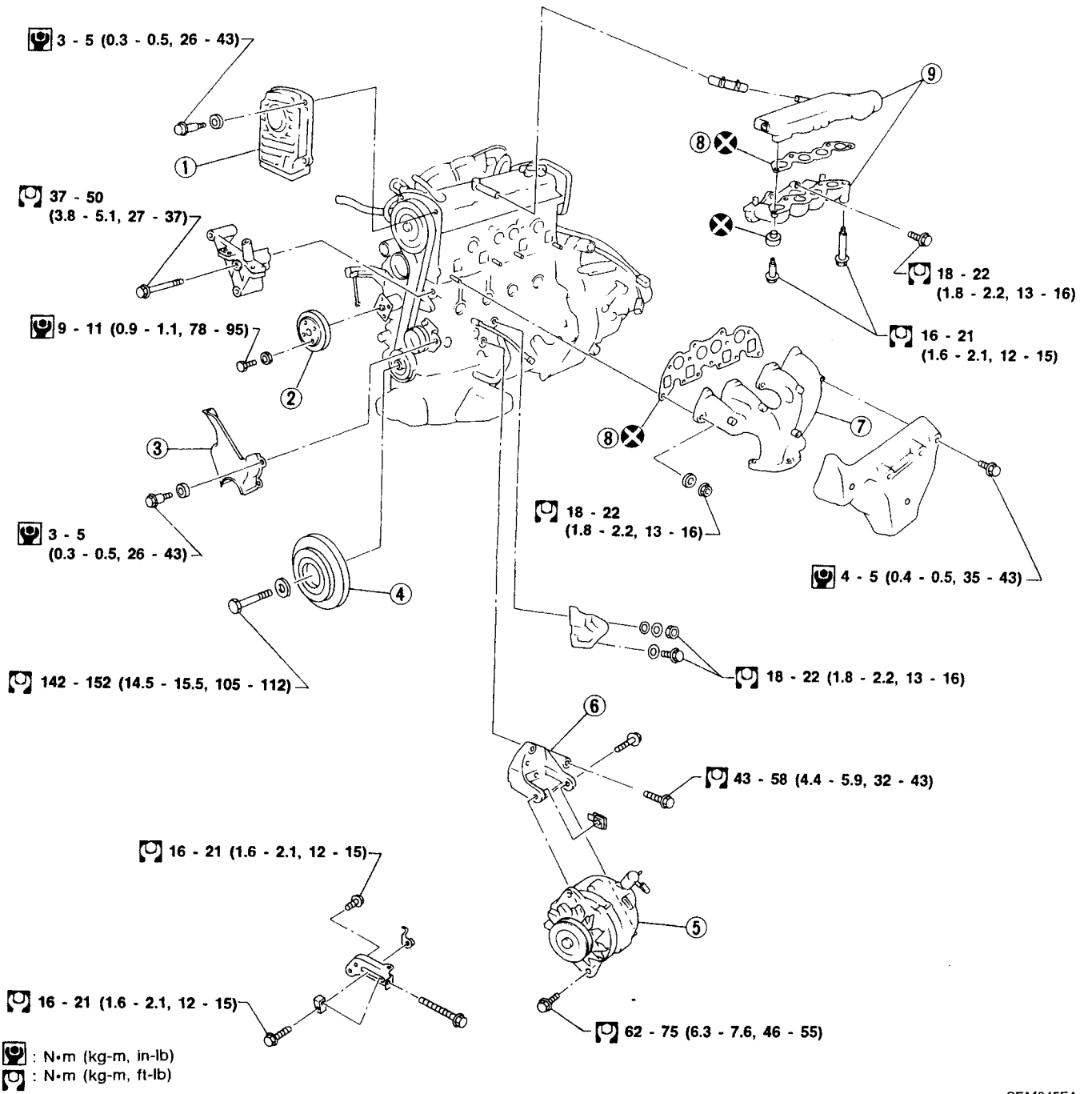

: N·m (kg-m, in-lb)
: N·m (kg-m, ft-lb)

SEM045FA

① Belt cover upper
② Water pump pulley
③ Belt cover lower
④ Crankshaft pulley
⑤ Alternator
⑥ Alternator bracket
⑦ Exhaust manifold
⑧ Gasket
⑨ Intake manifold

Simpo PDF Merge and Split Unregistered Version - http://www.simpopdf.com

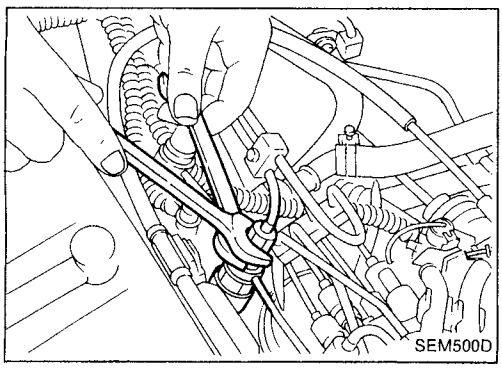
SEM500D

1. Warm up engine sufficiently.
2. Disconnect injection tubes on nozzle side and loosen injection tubes on pump side. Release clamps on injection tubes.

- **Use two wrenches to prevent delivery holder on pump side from loosening.**

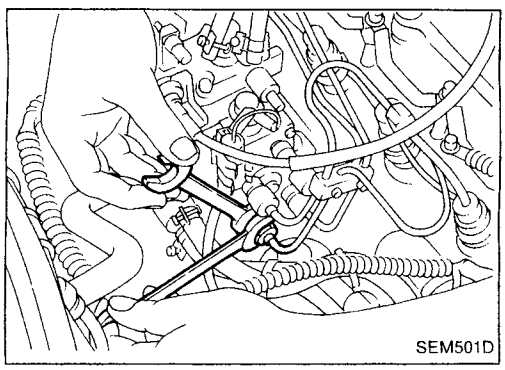
SEM501D

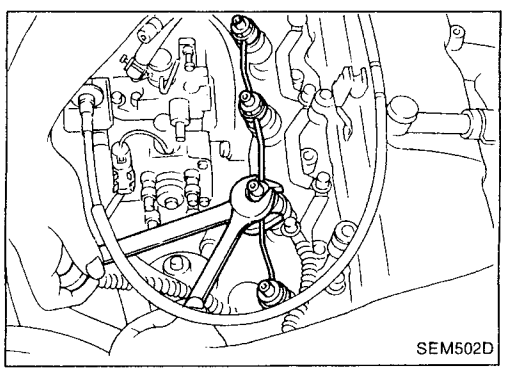
SEM502D

3. Remove spill-tube assembly.

- **To prevent spill tube from breaking, remove it by gripping nozzle holder.**

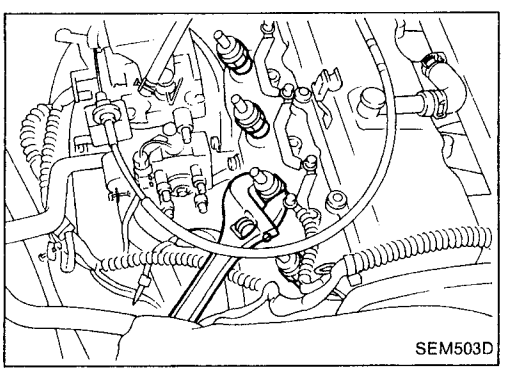
SEM503D

4. Remove all injection nozzles using a suitable tool.

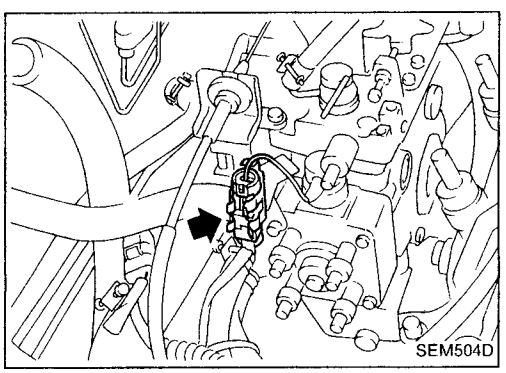
SEM504D

5. Disconnect fuel-cut solenoid valve connector.

Simpo PDF Merge and Split Unregistered Version - http://www.simpopdf.com

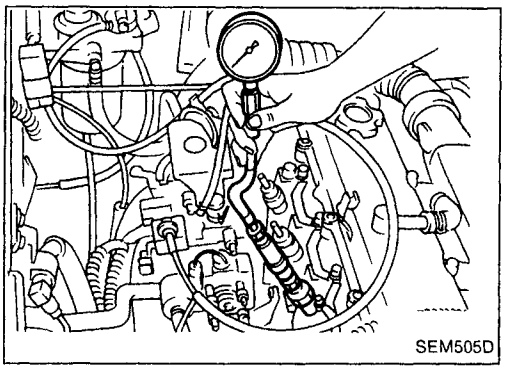
SEM505D

6. Fit compression gauge to cylinder head.

7. Crank engine and read compression gauge indication.
   Cranking speed: 200 rpm
   Compression pressure: kPa (bar, kg/cm^2, psi)
   Standard
   3,138 (31.4, 32, 455)
   Limit
   2,452 (24.5, 25, 356)
   Limit of difference between cylinders
   490 (4.9, 5, 71)
8. If the pressure appears low, pour about 3 mℓ (0.11 Imp fl oz) of engine oil through nozzle holes and repeat test.
   For indications of test, refer to the following table.

Gauge indication during tests	Trouble diagnosis
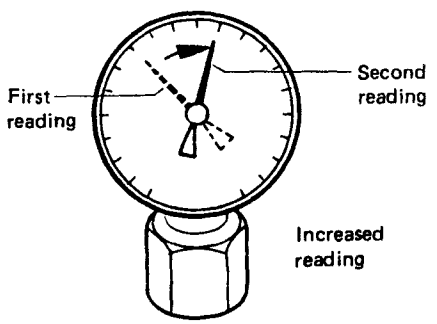	● Piston rings are worn or damaged.
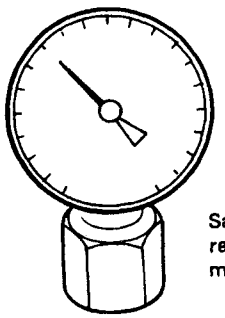	● If two adjacent cylinders are low, gasket is damaged. ● Valve is sticking. ● Valve seat or valve contact surface is incorrect.

Simpo PDF Merge and Split Unregistered Version - http://www.simpopdf.com

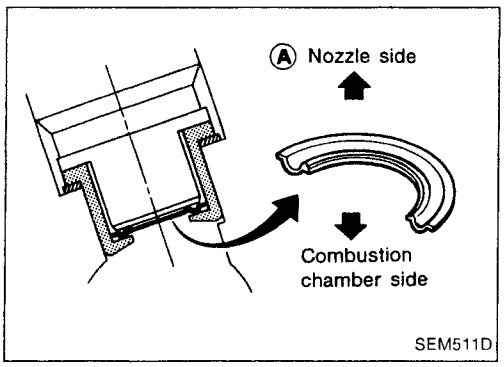

9. Replace nozzle gaskets and re-install injection nozzles.
New nozzle gaskets must be installed in the direction shown.
Nozzle to cylinder head:
: 59 - 69 N·m (6 - 7 kg-m, 43 - 51 ft-lb)

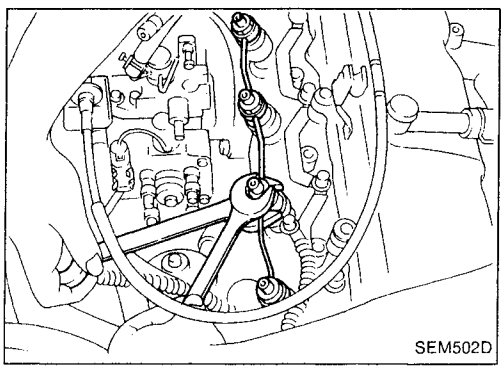

10. Install spill tube by holding nozzle holder.
Spill tube nut:
: 39 - 49 N·m (4 - 5 kg-m, 29 - 36 ft-lb)

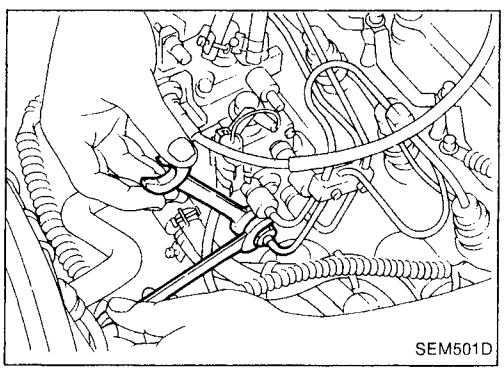

11. Install injection tubes using two wrenches as shown.
Injection tubes:
: 22 - 25 N·m (2.2 - 2.5 kg-m, 16 - 18 ft-lb)

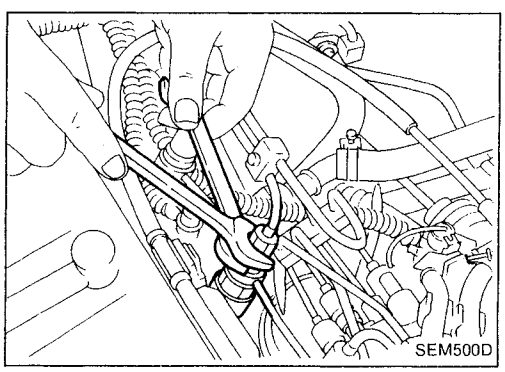

Simpo PDF Merge and Split Unregistered Version - http://www.simpopdf.com

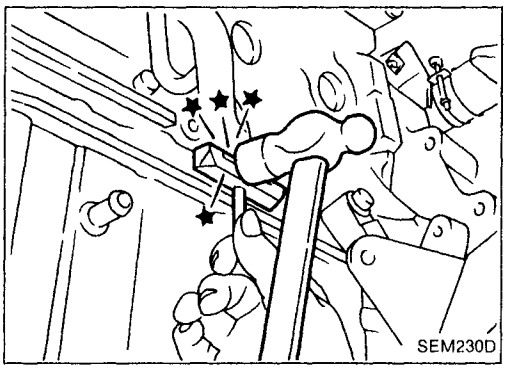

Removal

1. Drain oil.
2. Remove oil pan using tool as illustrated.

1) Insert Tool between oil pan and cylinder block.

- **Do not drive seal cutter into oil pump or rear oil seal retainer portion, or aluminum mating surfaces will be damaged.**
- **Do not insert screwdriver, or oil pan flange will be deformed.**

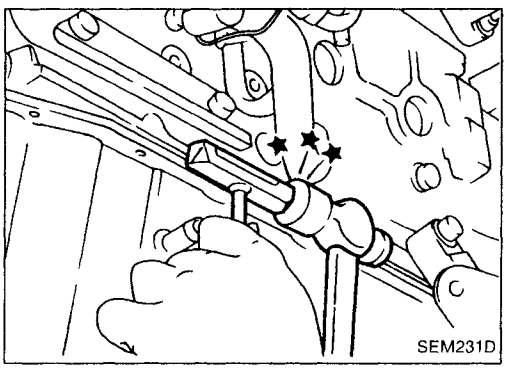

2) Slide Tool by tapping it with a hammer, and remove oil pan.

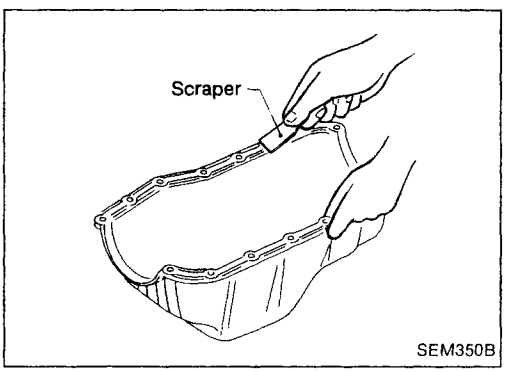

Installation

1. Before installing oil pan, remove all traces of liquid gasket from mating surface using a scraper.

- Also remove traces of liquid gasket from mating surface of cylinder block.

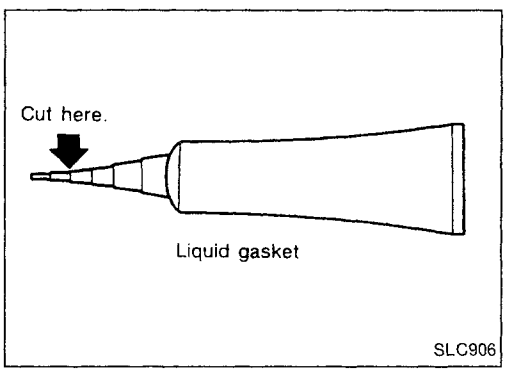

- Be sure liquid gasket is 3.5 to 4.5 mm (0.138 to 0.177 in) wide.

Use Genuine Liquid Gasket or equivalent.

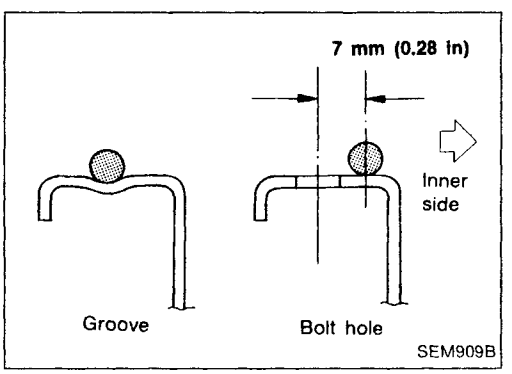

2. Apply liquid gasket to inner sealing surface as shown at left.

Simpo PDF Merge and Split Unregistered Version - http://www.simpopdf.com

Installation (Cont'd)

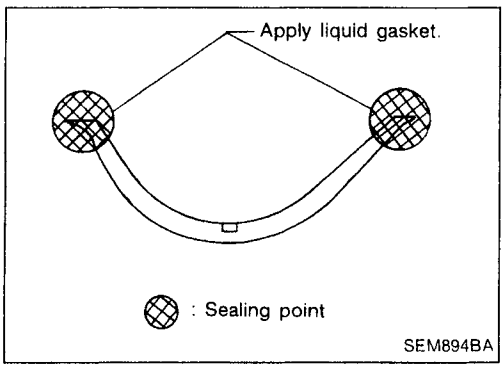

3. Apply liquid gasket to oil pan front oil seal and rear oil seal.

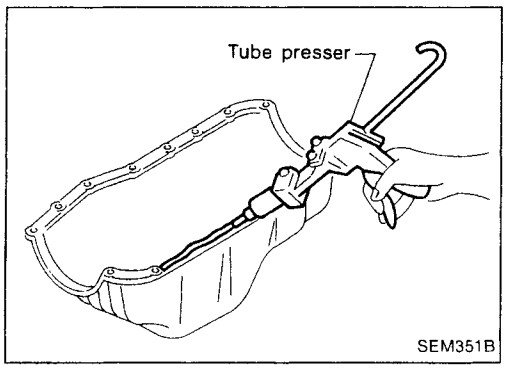

4. Apply a continuous bead of liquid gasket to mating surface of oil pan.
- Attaching should be done within 5 minutes after coating.

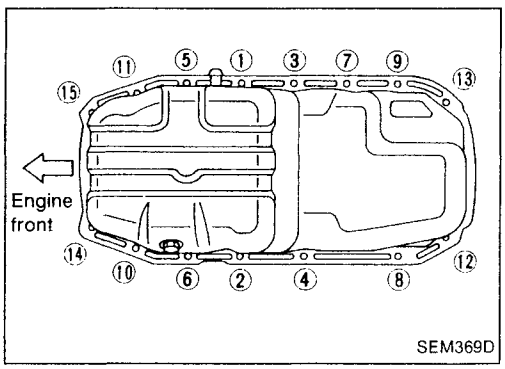

5. Install oil pan and tighten bolts in the order shown in the figure.

Wait at least 30 minutes before refilling engine oil.

Oil pan bolts:

: 7 - 8 N·m (0.7 - 0.8 kg-m, 61 - 69 in-lb)

EM

Simpo PDF Merge and Split Unregistered Version - http://www.simpopdf.com

Camshaft Timing Belt

CAUTION:

a. Do not bend or twist timing belt.

b. After removing timing belt, do not turn crankshaft and camshaft separately because valves will strike piston heads.

c. Ensure that timing belt, camshaft sprocket, crankshaft sprocket and belt tensioner are clean and free from oil and water.

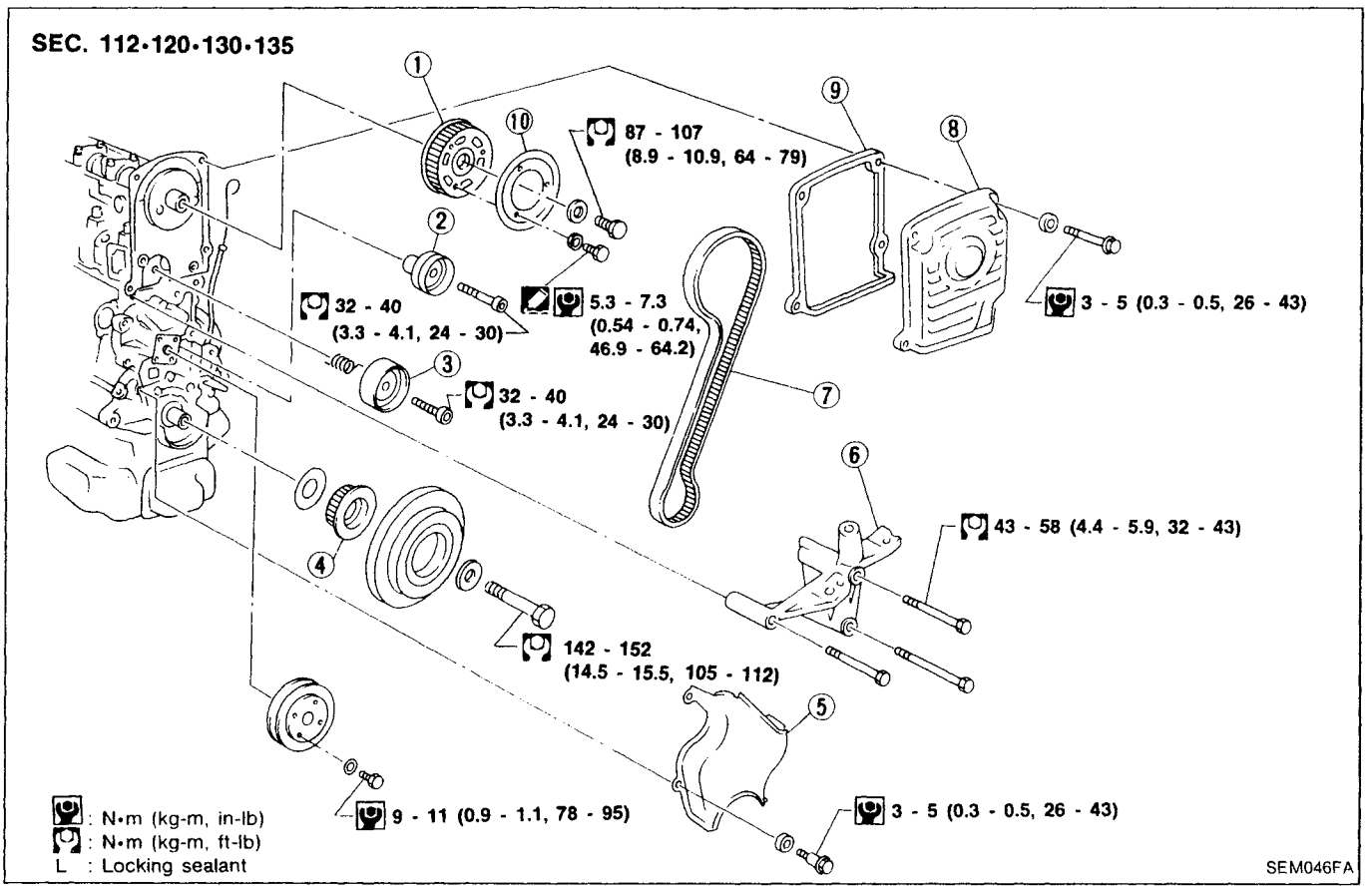

① Front camshaft sprocket
② Idler
③ Belt tensioner
④ Crankshaft sprocket
⑤ Belt cover lower
⑥ Belt cover center (Engine mounting bracket)
⑦ Timing belt
⑧ Belt cover upper
⑨ Gasket
⑩ Front camshaft sprocket plate

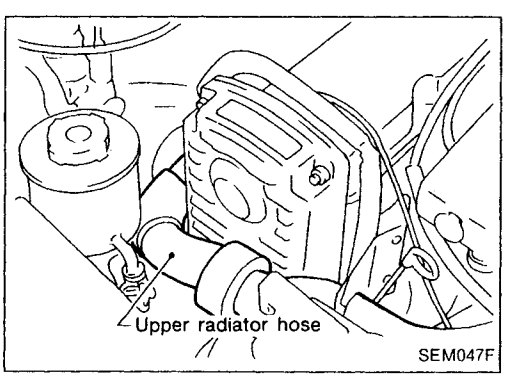

REMOVAL

1. Drain engine coolant from radiator.
2. Remove upper radiator hose and upper belt cover.
3. Remove water pump pulley.

Simpo PDF Merge and Split Unregistered Version - http://www.simpopdf.com

Camshaft Timing Belt (Cont'd)

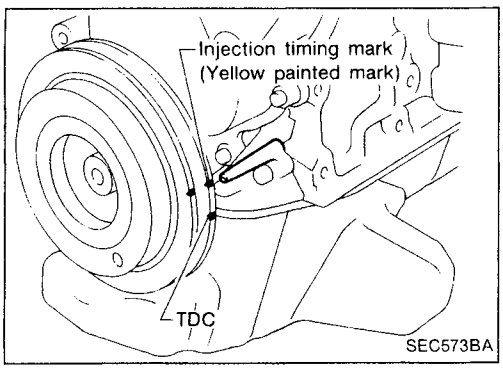

4. Set No. 1 cylinder at TDC on its compression stroke. (TDC is indicated by crankshaft pulley notch without painted mark.)

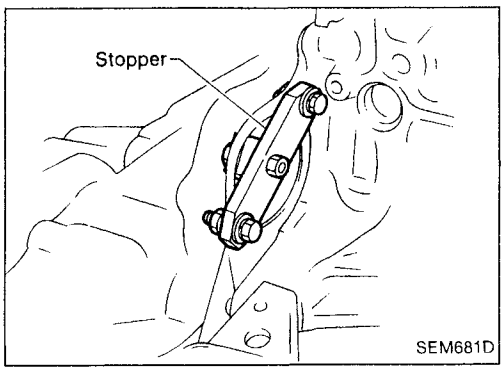

5. Remove starter motor, and install ring gear stopper using mounting bolt holes.
6. Remove crank pulley bolt.
7. Remove crank pulley using puller.
   Be sure to securely attach puller jaws. Attach jaws only to the rear side of pulley.
8. Remove lower belt cover.

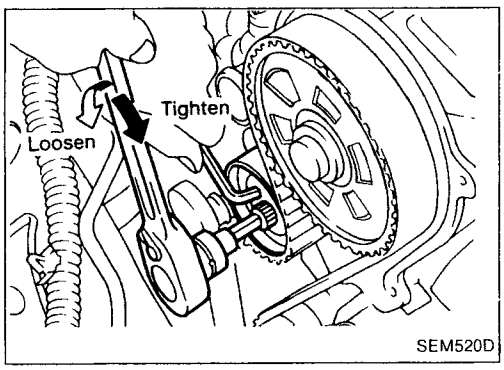

9. Remove timing belt.
   (1) Loosen tensioner pulley bolt, turn tensioner pulley counter-clockwise then tighten bolt.
   (2) Remove camshaft sprocket plate.

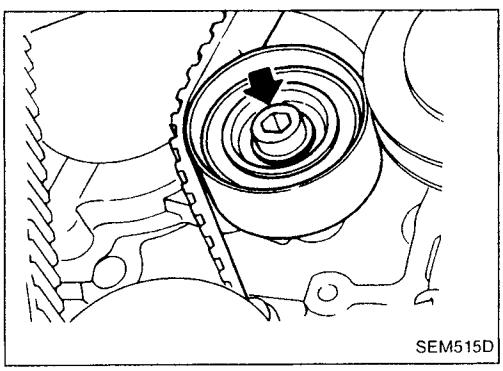

   (3) Remove idler pulley.

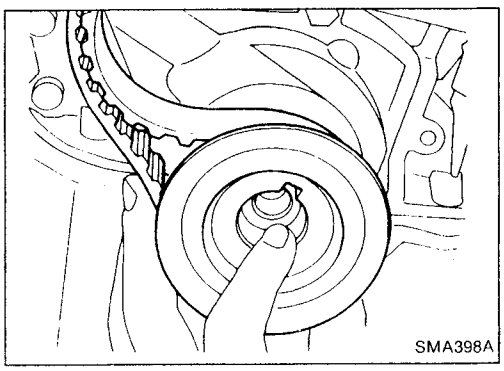

   (4) Remove timing belt with crankshaft sprocket.
   (5) Remove tensioner pulley and return spring.

Simpo PDF Merge and Split Unregistered Version - http://www.simpopdf.com

Camshaft Timing Belt (Cont'd)

INSPECTION

Timing belt

Visually check the condition of timing belt.
Replace if any abnormality is found.

Item to check	Problem	Cause
Tooth is broken/tooth root is cracked.	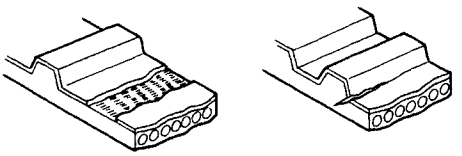 SEM394A	• Camshaft jamming • Distributor jamming • Damaged camshaft/crankshaft oil seal
Back surface is cracked/worn.	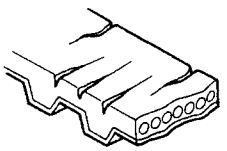 SEM395A	• Tensioner jamming • Overheated engine • Interference with belt cover
Side surface is worn.	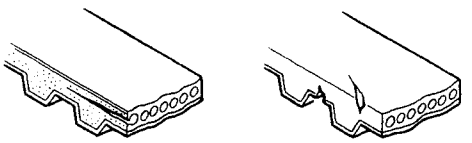 • Belt corners are worn and round. • Wicks are frayed and coming out. SEM396A	• Improper installation of belt • Malfunctioning crankshaft pulley plate/timing belt plate
Teeth are worn.	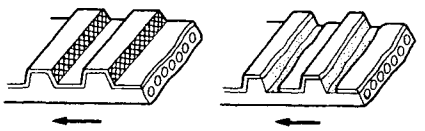 Rotating direction • Canvas on tooth face is worn down. • Canvas on tooth is fluffy, rubber layer is worn down and faded white, or weft is worn down and invisible. SEM397A	• Poor belt cover sealing • Coolant leakage at water pump • Camshaft not functioning properly • Distributor not functioning properly • Excessive belt tension
Oil, coolant or water is stuck to belt.		• Poor oil sealing of each oil seal • Coolant leakage at water pump • Poor belt cover sealing

Simpo PDF Merge and Split Unregistered Version - http://www.simpopdf.com

Camshaft Timing Belt (Cont'd)

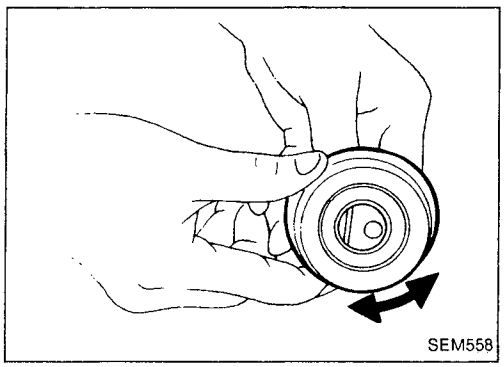
SEM558

Belt tensioner, tensioner spring and idler

1. Check belt tensioner and idler for smooth turning.
2. Check condition of tensioner spring.

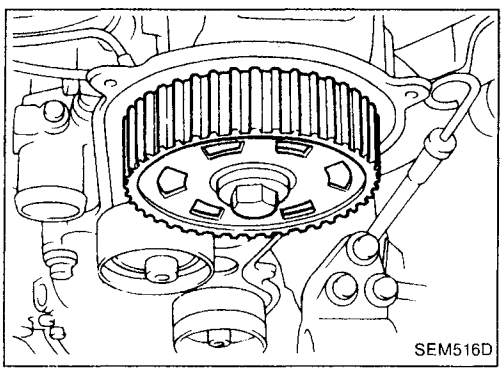
SEM516D

Crankshaft sprocket and front camshaft sprocket

Check teeth for abnormal signs.

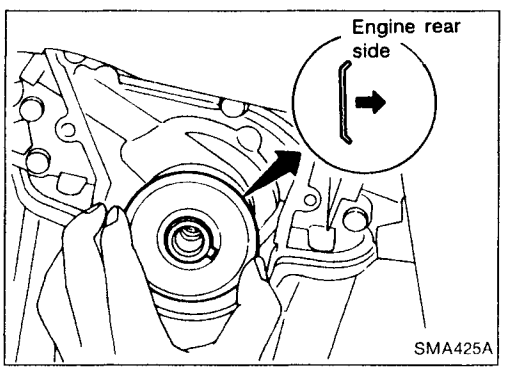

SMA425A

INSTALLATION

1. Install crankshaft sprocket plate in correct direction.

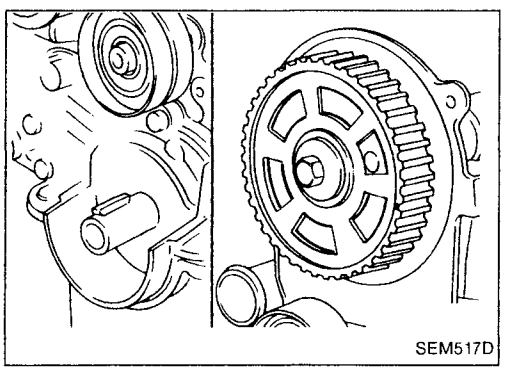
SEM517D

2. Confirm that No. 1 piston is set at TDC on its compression stroke. (TDC is indicated by crankshaft pulley notch without painted mark.)

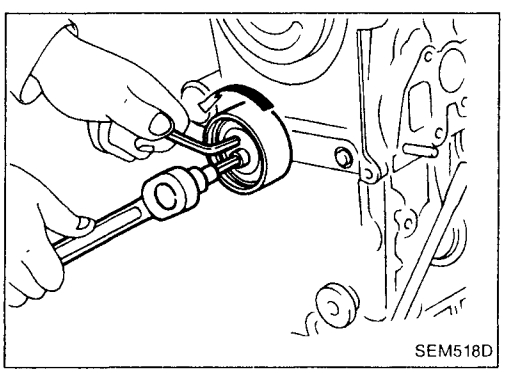
SEM518D

3. Install tensioner and return spring.
Temporarily tighten bolts so that tensioner is set at the fully outside position.
4. Install idler and tighten bolt to the specified torque.

Simpo PDF Merge and Split Unregistered Version - http://www.simpopdf.com

Camshaft Timing Belt (Cont'd)

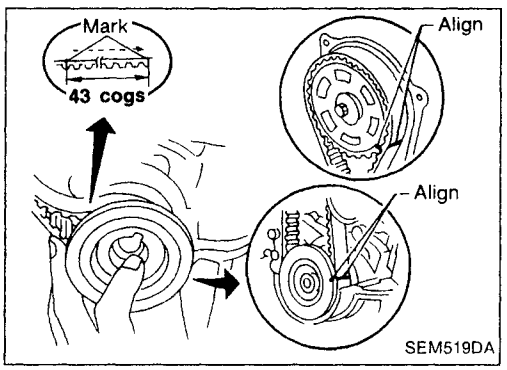

5. Install timing belt with crankshaft sprocket.
a. Align white lines on timing belt with punchmarks on camshaft sprocket and crankshaft sprocket.
b. Point arrow on timing belt toward belt cover.
6. Install camshaft sprocket plate and secure screws with locktite.

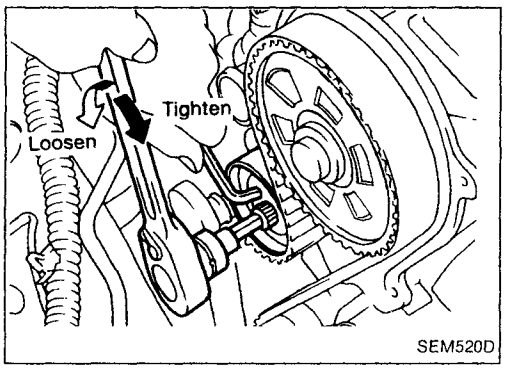

7. Adjust timing belt tension.
1) Loosen tensioner lock bolt to apply tension to timing belt.
2) Rotate crankshaft clockwise two turns to apply the specified tension to timing belt.
3) Tighten tensioner lock bolt while holding tensioner pulley with hexagon wrench.
Belt tension:
147.1 ± 24.5 N (15 ± 2.5 kg, 33.1 ± 5.5 lb)

Injection Pump Timing Belt

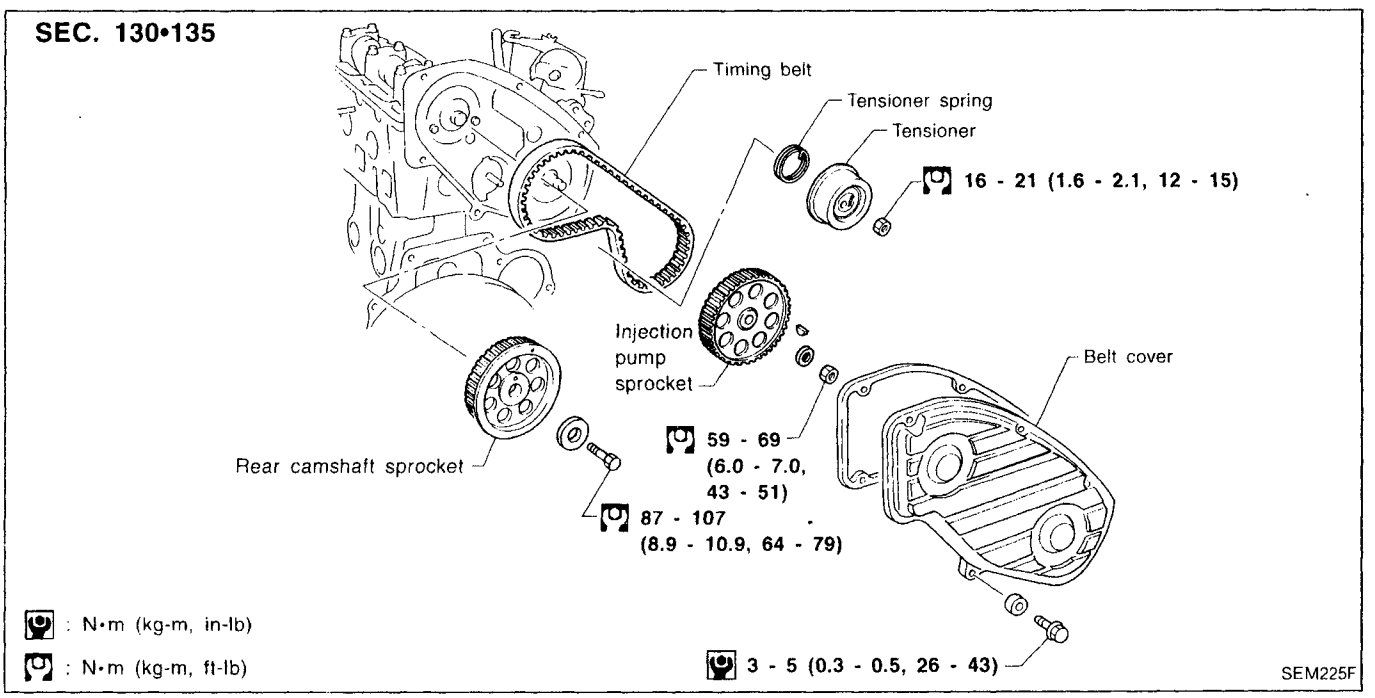

REMOVAL

1. Set No. 1 cylinder at TDC on its compression stroke. (TDC is indicated by crankshaft pulley notch without painted mark.)
2. Remove air duct with resonator and timing belt cover.

Simpo PDF Merge and Split Unregistered Version - http://www.simpopdf.com

Injection Pump Timing Belt (Cont'd)

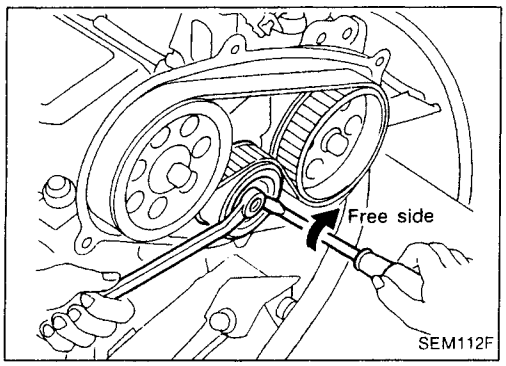

3. Remove timing belt.
1) Loosen tensioner lock nut and turn tensioner clockwise to free belt from tension. Then temporarily tighten tensioner nut.
2) Remove timing belt.

EM

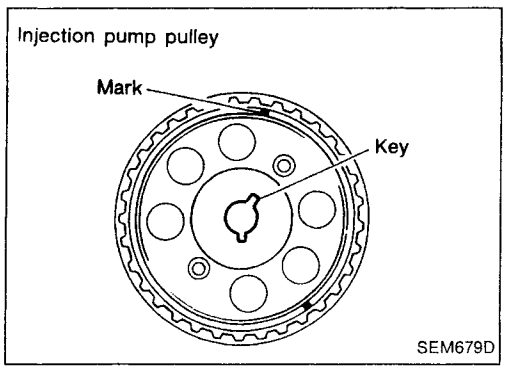

INSTALLATION

1. Confirm that No. 1 piston is set at TDC on its compression stroke. (TDC is indicated by crankshaft pulley notch without painted mark.)
- If injection pump pulley was removed, confirm that it is re-installed as illustrated.

Identification of alignment:
Use mark "A"

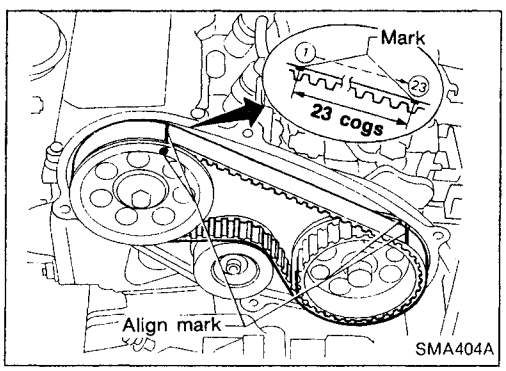

2. Set timing belt.
a. Align white lines on timing belt with punchmarks on camshaft sprocket and injection pump sprocket.
b. Point arrow on timing belt toward belt cover.

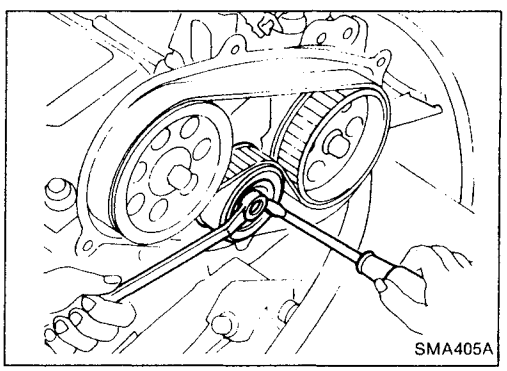

3. Adjust belt tension.
1) Loosen tensioner lock nut to apply tension to timing belt.
2) Rotate crankshaft clockwise two turns.
Do not turn crankshaft by camshaft sprockets.
3) Tighten tensioner lock nut while holding tensioner with a screwdriver.

Belt tension:
147 ± 49 N (15 ± 5 kg, 33 ± 11 lb)

INSPECTION

Refer to INSPECTION in "Camshaft Timing Belt" (EM-122).

INJECTION TIMING ADJUSTMENT

Refer to EC section.

Simpo PDF Merge and Split Unregistered Version - http://www.simpopdf.com

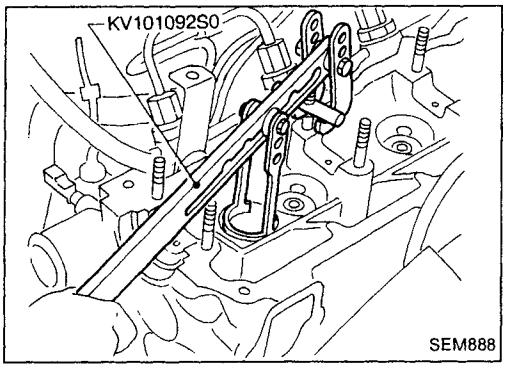

VALVE OIL SEAL

1. Remove both timing belts.
2. Remove camshaft sprockets and back covers.
3. Remove camshaft brackets by loosening bracket nuts from center to outside in two or three stages.
4. Remove camshaft oil seals and camshaft.

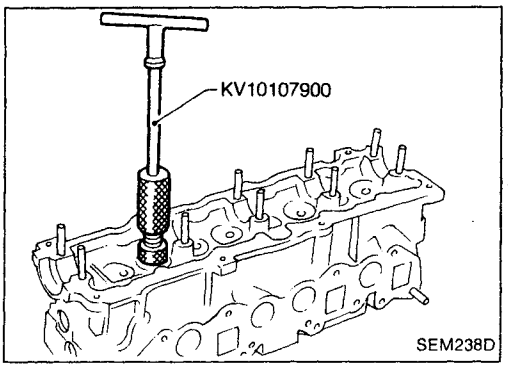

5. Remove valve lifters and mark order No. on each lifter.
6. Replace valve oil seal according to the following procedure.

When replacing valve oil seal, set the corresponding piston at TDC. Failure to do so causes the valve to drop into the cylinder.

1) Set No. 1 cylinder at TDC.
2) Remove valve springs and valve oil seals for No. 1 and No. 4 cylinders. Valve spring seats should not be removed.

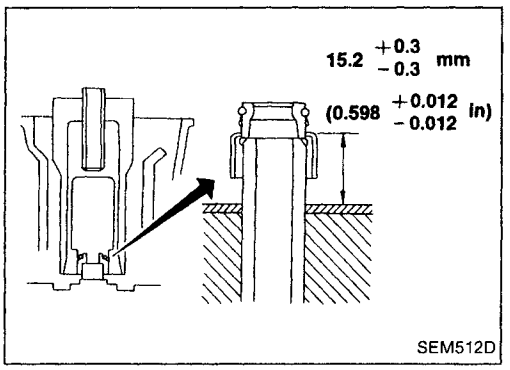

3) Install new valve oil seals for No. 1 and No. 4 cylinders as illustrated. Reinstall valve springs. (narrow pitch side toward cylinder head)
4) Install valve spring retainers on intake valves and valve rotators on exhaust valves, and remount valve assembly.
5) Set No. 2 cylinder at TDC.
6) Replace valve oil seals for No. 2 and No. 3 cylinders according to steps 2) and 3).
7) Install valve lifters in original positions.

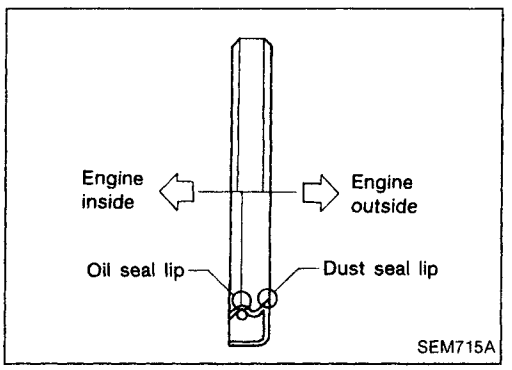

CAMSHAFT AND CRANKSHAFT OIL SEAL INSTALLING DIRECTION AND MANNER

- **When installing camshaft and crankshaft oil seals, be careful to install them correctly, as shown in the figure.**
- **Apply engine oil to oil seal lip, outer face, camshaft and bracket.**
- **Wipe off excess oil after installing oil seal.**

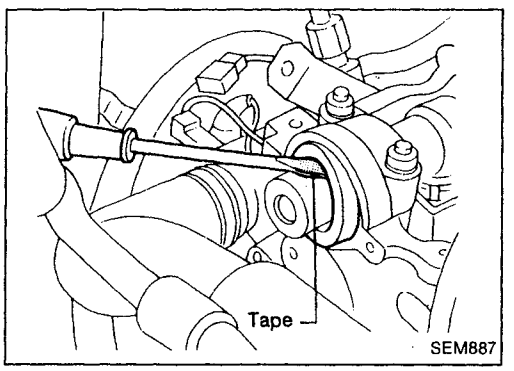

CAMSHAFT OIL SEALS

1. Remove timing belts, sprockets and back covers.
2. Pull out oil seal with a suitable tool.

Simpo PDF Merge and Split Unregistered Version - http://www.simpopdf.com

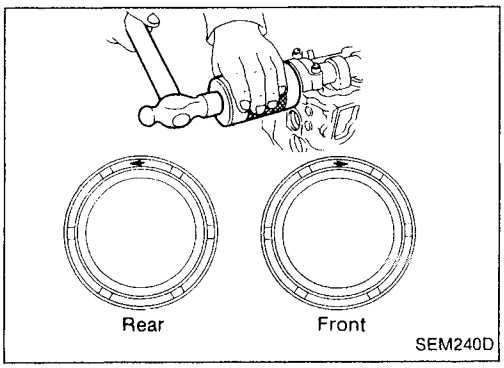

3. Install new oil seals with a suitable tool.

Confirm turning direction of both oil seals and camshaft.

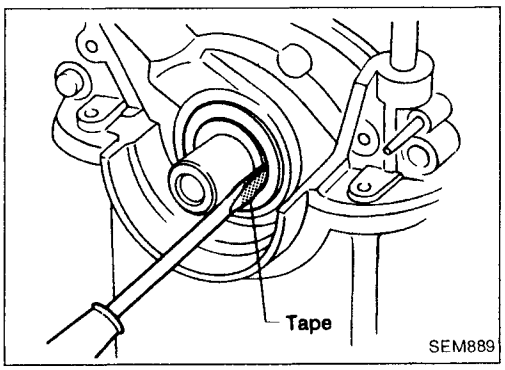

CRANKSHAFT FRONT OIL SEAL

1. Remove valve timing belt and crankshaft sprocket.
2. Remove oil seal with a suitable tool.

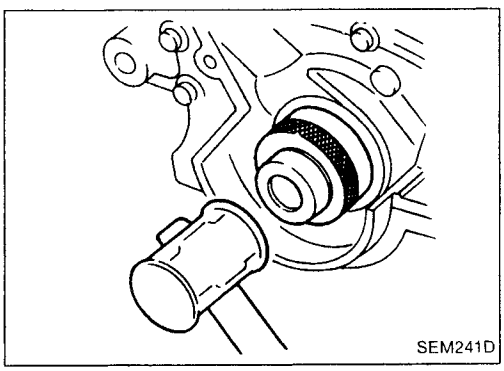

3. Apply engine oil to new oil seal and install oil seal using a suitable tool.

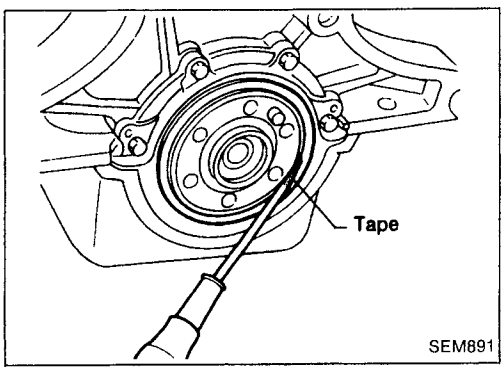

CRANKSHAFT REAR OIL SEAL

1. Remove transaxle assembly. (Refer to "REMOVAL AND INSTALLATION" in MT section.)
2. Remove flywheel.
3. Remove rear oil seal with a suitable tool.

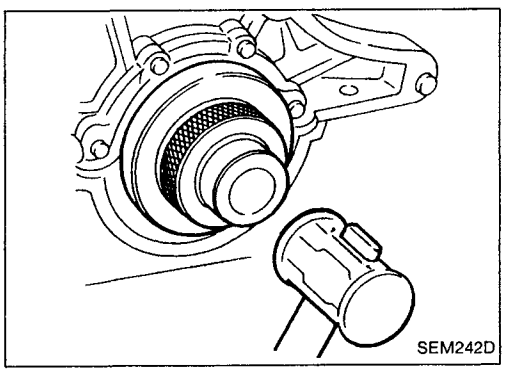

4. Apply engine oil to new oil seal and install oil seal using a suitable tool.

Simpo PDF Merge and Split Unregistered Version - http://www.simpopdf.com

SEC. 111•130•135

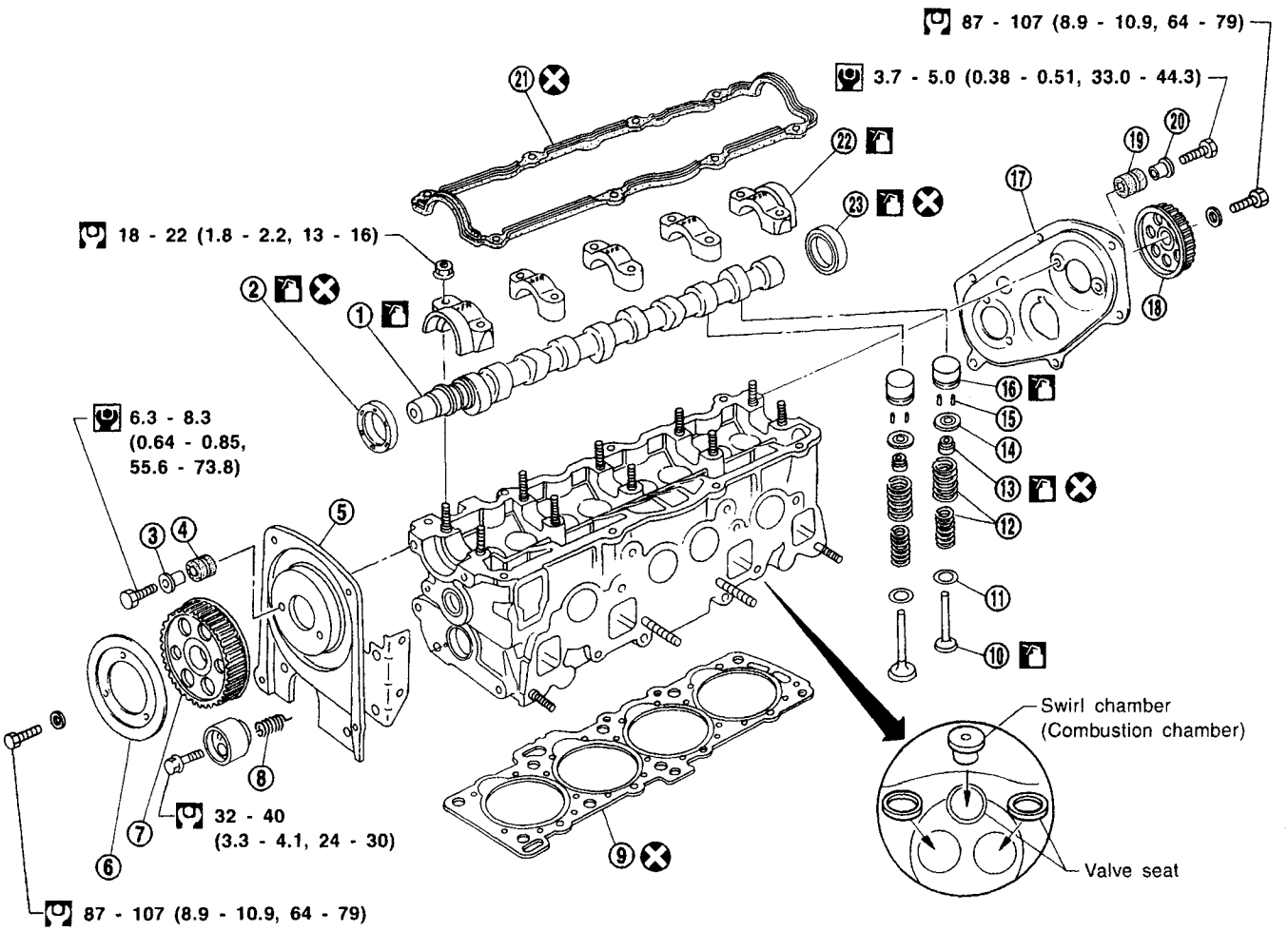

: N•m (kg-m, in-lb)
: N•m (kg-m, ft-lb)
: Lubricate with new engine oil.

SEM226F

① Camshaft
② Front oil seal
③ Collar
④ Grommet
⑤ Front back cover
⑥ Front camshaft sprocket plate
⑦ Front camshaft sprocket
⑧ Spring
⑨ Selective cylinder head gasket
⑩ Valve
⑪ Spring seat
⑫ Valve spring
⑬ Valve oil seal
⑭ Spring retainer (INT)/Valve rotator (EXH)
⑮ Valve cotter
⑯ Hydraulic valve lifter
⑰ Rear back cover
⑱ Rear camshaft sprocket
⑲ Grommet
⑳ Collar
㉑ Rocker cover gasket
㉒ Cam bracket
㉓ Rear oil seal

For hydraulic valve lifter
- Before starting engine, make sure that valve does not hit piston when rotating crankshaft by hand.
- When bleeding air out from hydraulic valve lifter, run engine at more than 2,400 rpm for 20 minutes or more.

Simpo PDF Merge and Split Unregistered Version - http://www.simpopdf.com

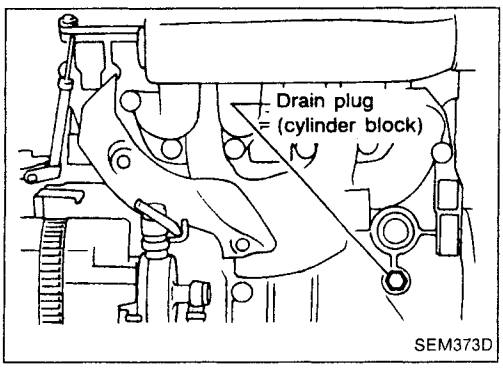

Removal

1. Drain coolant and disconnect front exhaust pipe from manifold.
2. Remove water hoses, air duct and intake manifold.
3. Remove heat shield and exhaust manifold.
4. Remove rocker cover and injection tubes.
5. Remove both timing belts.
   Set No. 1 cylinder at TDC on its compression stroke. Refer to "TIMING BELT" (EM-120).

After timing belts have been removed, do not rotate crankshaft and/or camshaft separately as valves will hit piston heads.

6. Remove cylinder head in numerical order as shown in the figure.

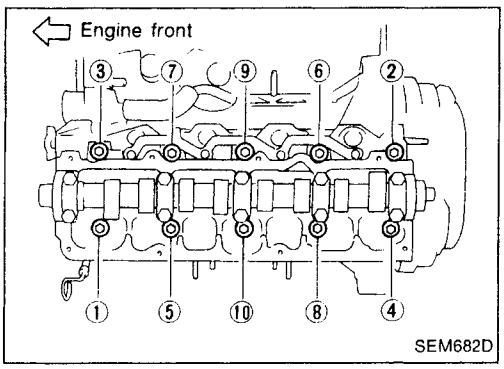

Disassembly

1. Remove front camshaft sprocket plate, front and rear sprockets using special service tool or a suitable tool, and front back cover.
2. Remove camshaft brackets in order from outside to inside.
   - Loosen camshaft bracket nuts in two or three stages.
3. Remove camshaft and oil seals.

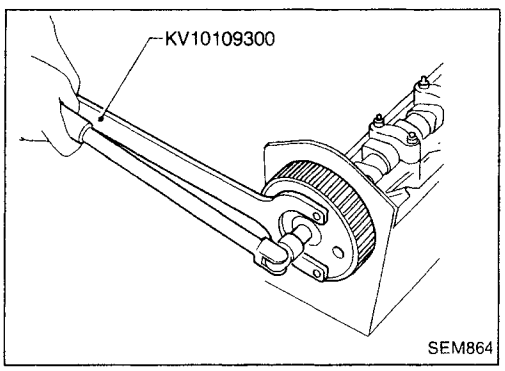

4. Remove valve lifters.

For hydraulic valve lifter

- **Do not set hydraulic valve lifters as illustrated as air will enter valve lifter causing malfunction.**
- **Do not disassemble hydraulic valve lifters.**
- **Attach tags to valve lifters to prevent mixing them up.**
- **Valve lifters must be put in engine oil after removal.**

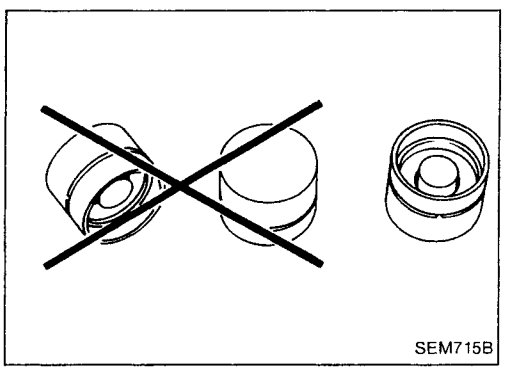

5. Remove valve component parts using special service tool or a suitable tool.
   - **Keep each valve and its components together and mark them so they can be reassembled in their original positions.**

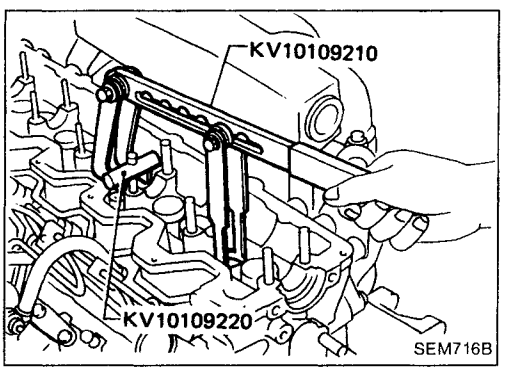

Simpo PDF Merge and Split Unregistered Version - http://www.simpopdf.com

Disassembly (Cont'd)

6. Remove valve oil seals using special tool.

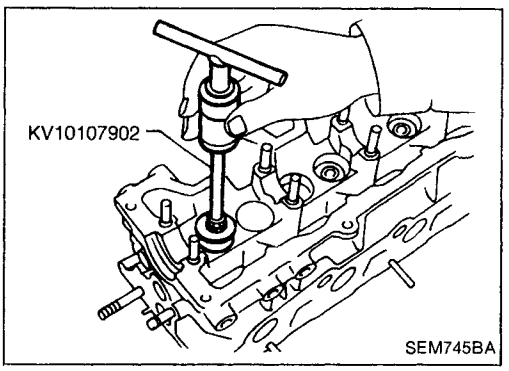

Inspection

CYLINDER HEAD DISTORTION

1. Visually check for cracks and deformation.
2. Check cylinder head for distortion.

Head surface flatness:

Less than 0.1 mm (0.004 in)

If beyond the specified limit, replace or resurface cylinder head.

Resurfacing limit:

The resurfacing limit of the cylinder head is related to the amount of resurfacing of the cylinder block.

When:

"A" is the amount of resurfacing needed for the cylinder head and "B" is the amount of resurfacing needed for the cylinder block, the maximum limit is determined by

A + B = 0.1 mm (0.004 in)

After resurfacing cylinder head, check that camshaft rotates freely by hand. If resistance is felt, the cylinder head must be replaced.

Nominal height of cylinder head:

137.9 - 138.1 mm (5.429 - 5.437 in)

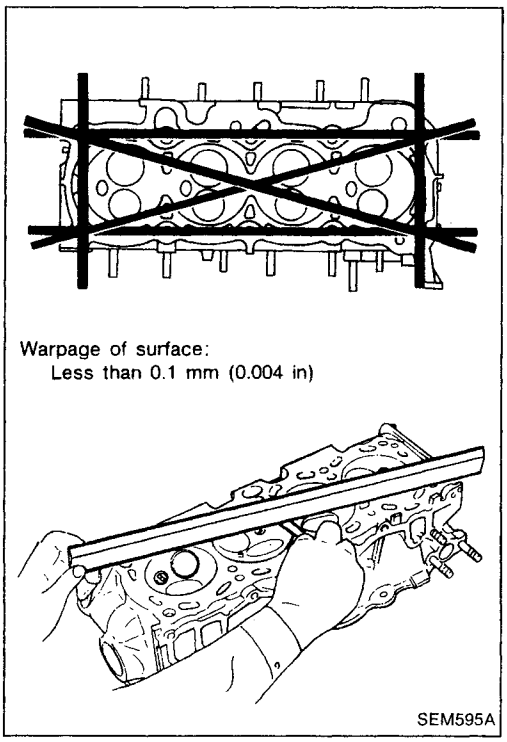

VALVE GUIDE CLEARANCE

1. Measure deflection across the cylinder head as illustrated.

Valve deflection limit (dial gauge reading):

0.1 mm (0.004 in)

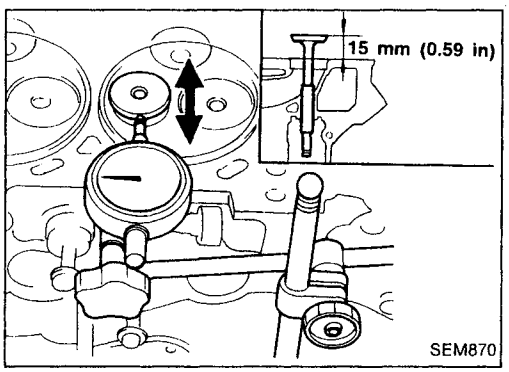

2. If exceeding the limit, check valve-to-guide clearance.

a) Measure valve stem diameter and valve guide inner diameter as illustrated.

b) Check that clearance is within the specification.

Valve stem to valve guide clearance limit:

0.1 mm (0.004 in)

c) If exceeding the limit, replace valve or valve guide.

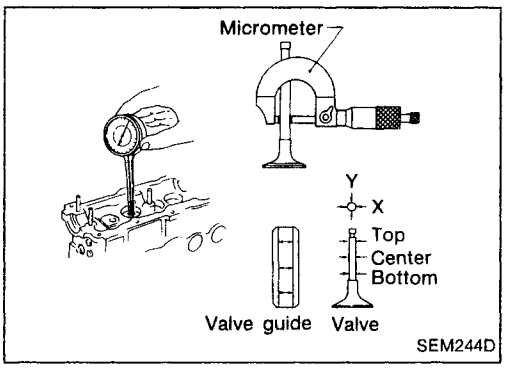

Simpo PDF Merge and Split Unregistered Version - http://www.simpopdf.com

Inspection (Cont'd)

VALVE GUIDE REPLACEMENT

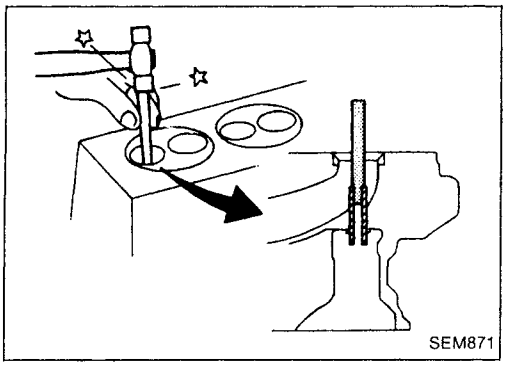
SEM871

1. Heat cylinder head in oil to 150 to 160°C (302 to 320°F).
2. Drive out valve guide using a press or hammer and a suitable tool.

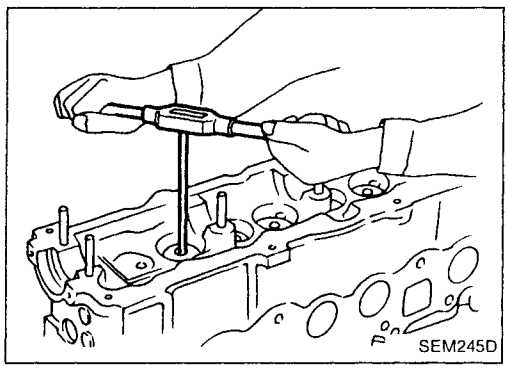
SEM245D

3. Ream cylinder head valve guide bore.
   Reaming bore (service part):
   11.185 - 11.196 mm (0.4404 - 0.4408 in)

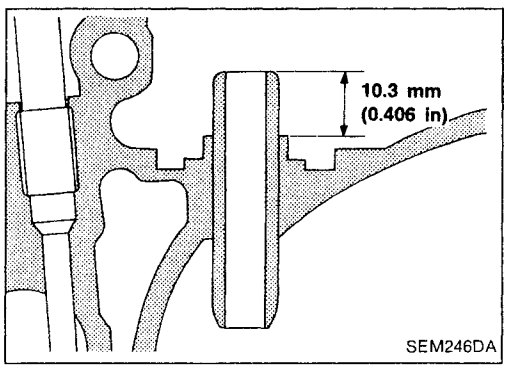

SEM246DA

4. Heat cylinder head to 150 to 160°C (302 to 320°F) and press service valve guide onto cylinder head.
5. Ream valve guide.
   Final size:
   7.000 - 7.015 mm (0.2756 - 0.2762 in)

VALVE SEATS

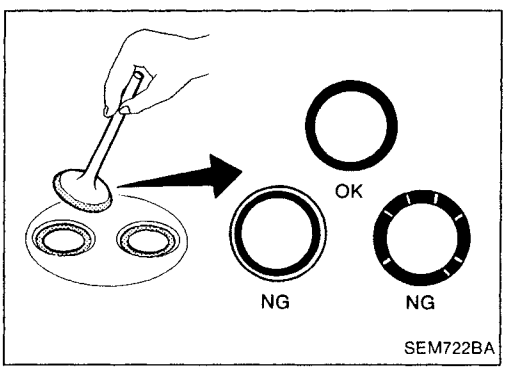

SEM722BA

1. Check valve and valve seat for contact.
   Coat the valve face with prussian red lead. If contact is wrong, correct valve seat. If the valve red lead appears 360° around face, the valve stem and face are concentric. If not, repair or replace valve.
2. Check valve seats for pitting at contact surface. Resurface or replace if excessively worn.
   Correct valve seat surface.

When repairing valve seat, check valve and valve guide for wear beforehand. If worn, replace them. Then correct valve seat.

Simpo PDF Merge and Split Unregistered Version - http://www.simpopdf.com

Inspection (Cont'd)

VALVE SEAT REPLACEMENT

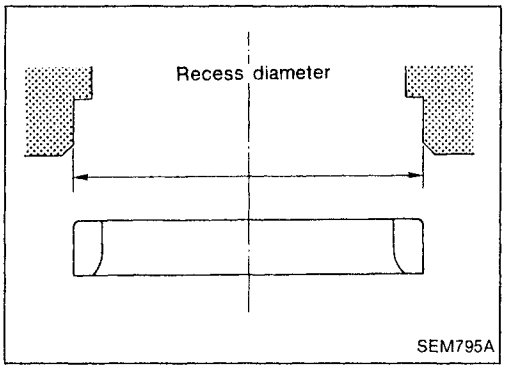

1. Bore out old seat until it collapses.
   Set machine depth stop so that boring cannot contact bottom face of seat recess in cylinder head.
2. Ream the cylinder head recess.
   Reaming bore for service valve seat
   [Oversize 0.5 mm (0.020 in)]:
   Intake 41.432 - 41.454 mm (1.6312 - 1.6320 in)
   Exhaust 35.432 - 35.454 mm (1.3950 - 1.3958 in)

Use the valve guide center for reaming to ensure valve seat will have the correct fit.

3. Heat cylinder head to a temperature of 150 to 160°C (302 to 320°F) and press fit seat until it seats on the bottom.
4. Install valve seats.

When replacing valve seat, valve should be replaced as well.

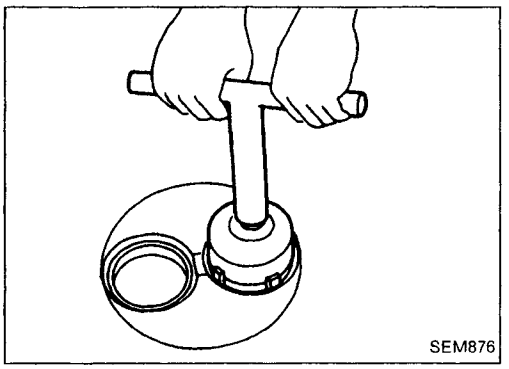

5. Cut or grind valve seat using a suitable tool at the specified dimensions as shown in SDS (EM-172).

The cutting should be done with both hands to obtain a uniform and concentric finish.

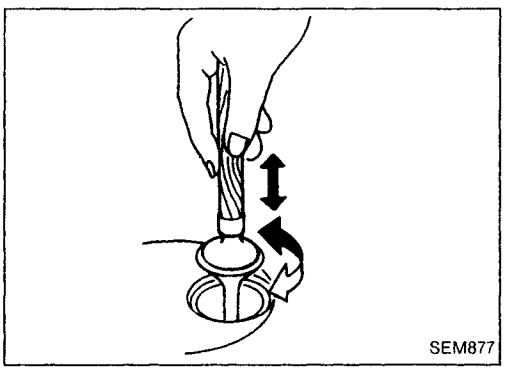

6. Apply a small amount of fine grinding compound to the valve's contacting face and put the valve into its guide.
   Lap valve against its seat until proper valve seating is obtained.

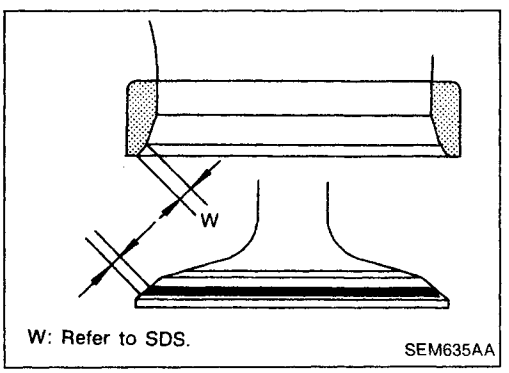

7. Check valve seating condition.

Simpo PDF Merge and Split Unregistered Version - http://www.simpopdf.com

Inspection (Cont'd)

VALVE DIMENSIONS

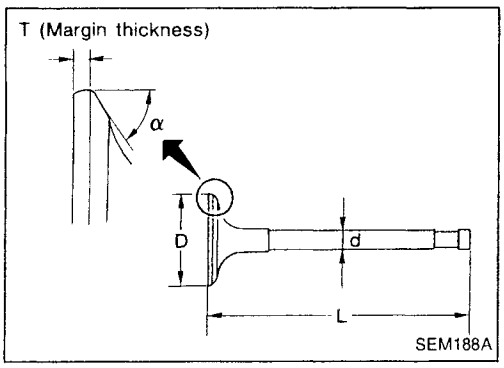

1. Check dimensions of each valve. For dimensions, refer to SDS (EM-171).
2. Correct or replace any valve that is faulty.

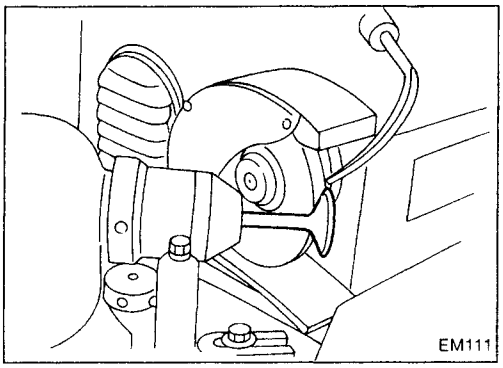

3. Valve face or valve stem end surface should be refaced by using a valve grinder.

When valve head has been worn down to 0.5 mm (0.020 in) in margin thickness, replace the valve.
Grinding allowance for valve stem tip is 0.5 mm (0.020 in) or less.

VALVE SPRING SQUARENESS

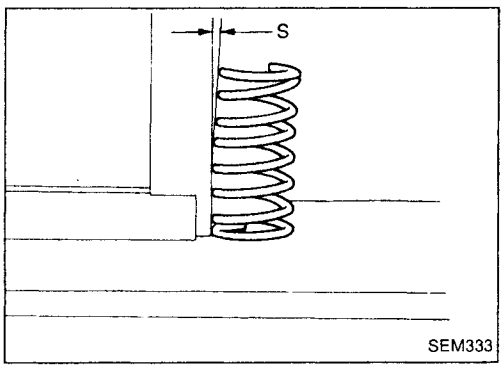

Check valve spring for squareness using a steel square and flat surface plate.
If spring is out of square "S" more than specified limit, replace with new one.

Out-of-square:
Outer
Less than 2.1 mm (0.083 in)
Inner
Less than 1.9 mm (0.075 in)

VALVE SPRING PRESSURE LOAD

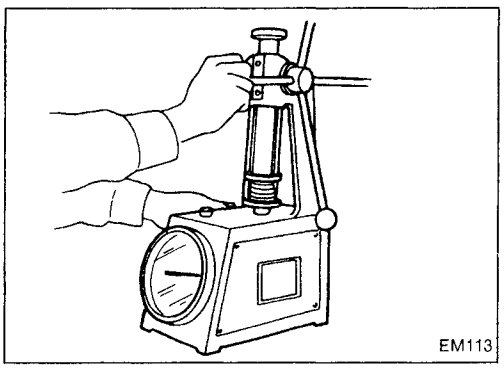

Measure the free length and the tension of each spring. If the measured value exceeds the specified limit, replace spring. Refer to SDS (EM-172).

HYDRAULIC VALVE LIFTER

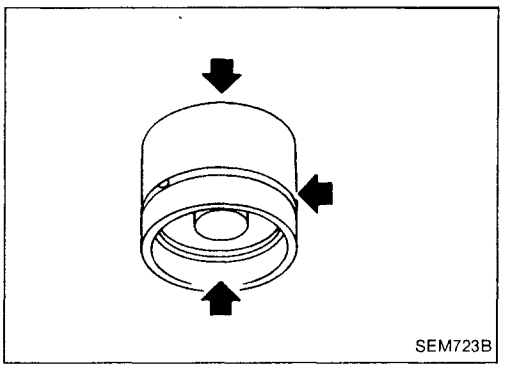

1. Check contact and sliding surfaces for wear or scratches.

Simpo PDF Merge and Split Unregistered Version - http://www.simpopdf.com

Inspection (Cont'd)

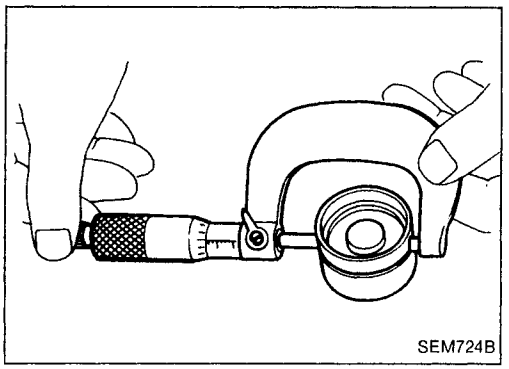
SEM724B

2. Check diameter of valve lifters.
   Outer diameter:
   34.959 - 34.975 mm (1.3763 - 1.3770 in)

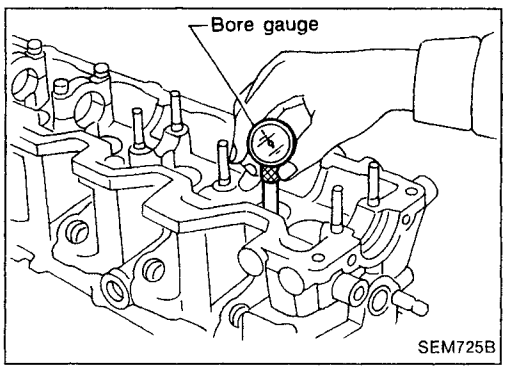

SEM725B

3. Check valve lifter guide bore.
   Bore diameter
   34.998 - 35.018 mm (1.3779 - 1.3787 in)
   Standard clearance
   0.023 - 0.059 mm (0.0009 - 0.0023 in)

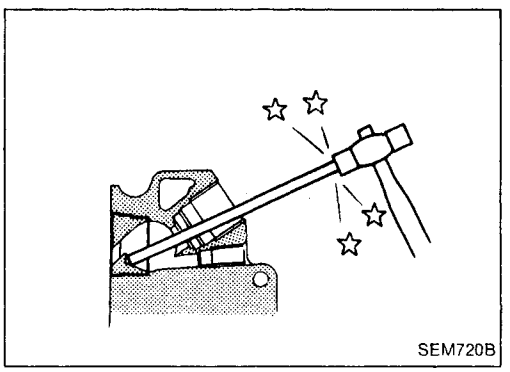
SEM720B

COMBUSTION CHAMBER REPLACEMENT

Usually combustion chambers should not be removed. However, if they show cracks or extensive damage, they should be replaced.

1. Remove glow plug connecting plate, glow plugs and injection nozzle.
2. Heat cylinder head in oil to between 150 and 160°C (302 and 320°F).
3. Remove combustion chamber so that cylinder head will not be damaged.

Be careful not to scratch inside of nozzle hole.

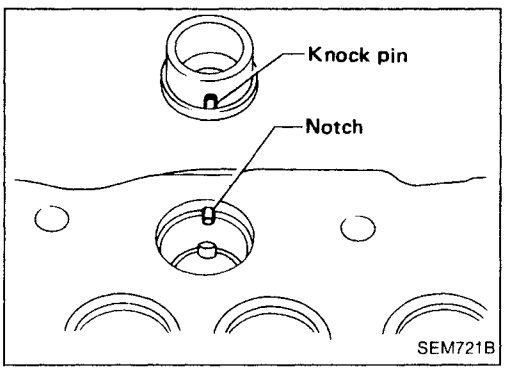

SEM721B

4. Install combustion chamber.
a. Heat cylinder head 150 to 160°C (302 to 320°F) in oil.
b. Align combustion chamber knock pin with cylinder head notch, and install it into cylinder head using a plastic-tip hammer.

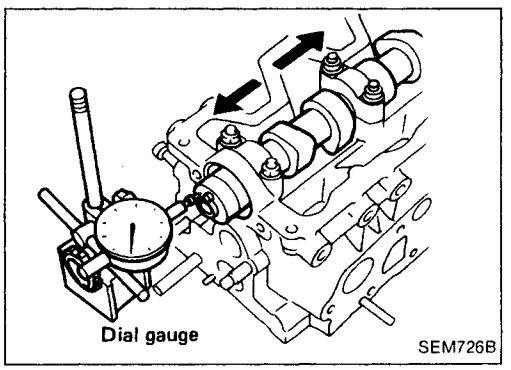

SEM726B

CAMSHAFT VISUAL CHECK

Check camshaft for scratches, seizure and wear.

CAMSHAFT END PLAY

1. Install camshaft in cylinder head.
2. Tighten bracket bolts to the specified torque.
3. Measure camshaft end play.
   Camshaft end play: Standard
   0.115 - 0.188 mm (0.0045 - 0.0074 in)

Simpo PDF Merge and Split Unregistered Version - http://www.simpopdf.com

Inspection (Cont'd)

CAMSHAFT RUNOUT

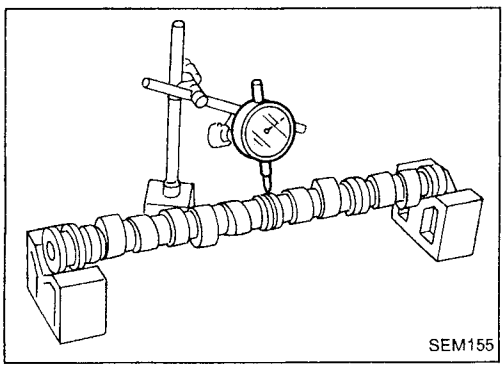
SEM155

1. Measure camshaft runout at the center journal.
   Runout (Total indicator reading):
   Limit 0.05 mm (0.0020 in)
2. If it exceeds the limit, replace camshaft.

CAMSHAFT CAM HEIGHT

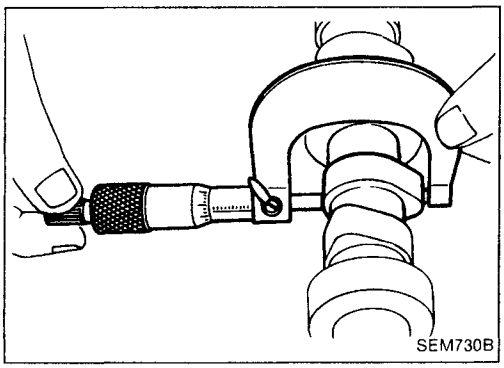
SEM730B

1. Measure camshaft cam height.

Cam height: Standard

Unit: mm (in)

Intake	49.20 - 49.25 (1.9370 - 1.9390)
Exhaust	49.15 - 49.20 (1.9350 - 1.9370)

2. If wear is beyond the limit, replace camshaft.

CAMSHAFT JOURNAL CLEARANCE

Using micrometer

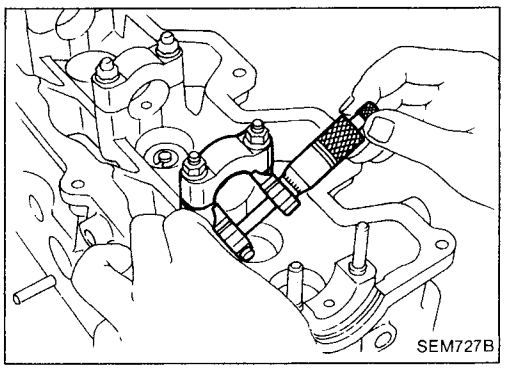
SEM727B

1. Measure the inner diameter of camshaft bearings.
   Standard inner diameter:
   30.000 - 30.021 mm (1.1811 - 1.1819 in)

Tighten bracket bolts to the specified torque.

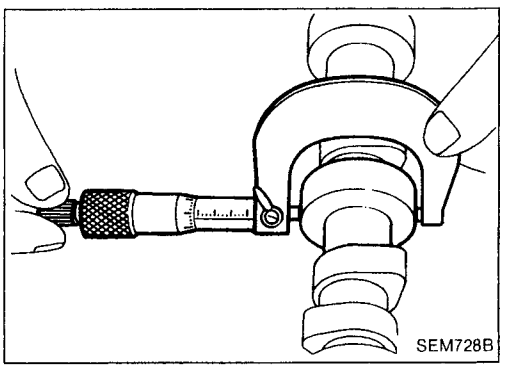
SEM728B

2. Measure the outer diameter of camshaft journals.
   Standard outer diameter:
   29.935 - 29.955 mm (1.1785 - 1.1793 in)

If clearance exceeds the limit, replace camshaft and/or cylinder head.

Standard clearance:
0.045 - 0.086 mm (0.0018 - 0.0034 in)
Limit: 0.1 mm (0.004 in)

Using plastigage

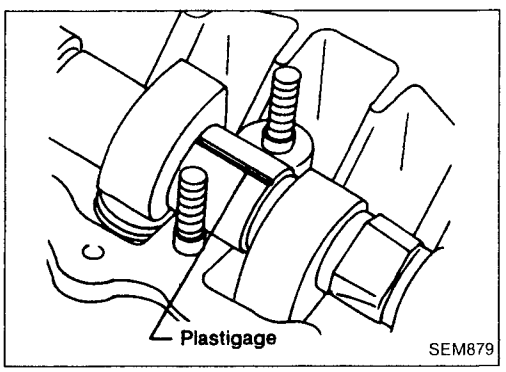

SEM879

1. Wipe off oil from camshaft journal bracket caps and brackets.
2. Install camshaft in journal bracket caps and put plastigage on each camshaft journal.
3. Install cam bracket caps and tighten cam bracket cap nuts in the correct order to the specified torque.
   : 18 - 22 N·m (1.8 - 2.2 kg-m, 13 - 16 ft-lb)

Simpo PDF Merge and Split Unregistered Version - http://www.simpopdf.com

Inspection (Cont'd)

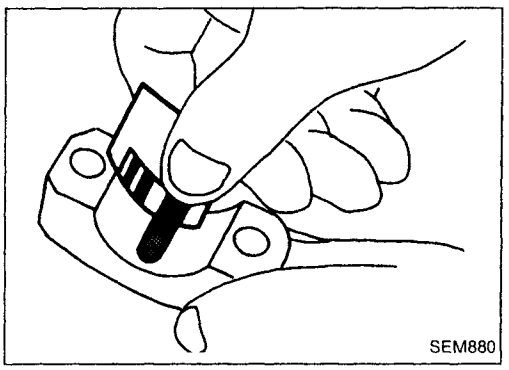

4. Remove cam bracket caps and measure maximum width of plastigage.
   Camshaft bearing clearance:
   Limit
   0.1 mm (0.004 in)
5. If clearance appears to exceed the limit, replace camshaft or cylinder head.

- Which parts to be replaced should be decided upon after measuring the diameters of the parts concerned.

Assembly

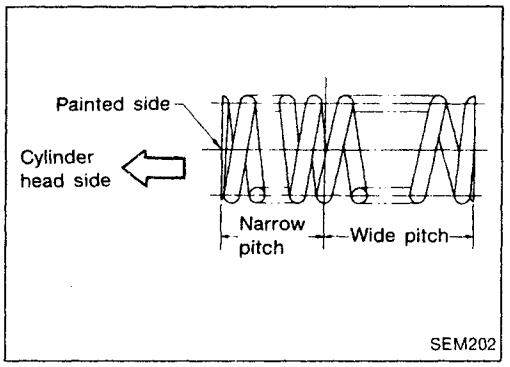

1. Install valve component parts.

Install valve spring with its narrow pitch side toward cylinder head side.

- **Always install new valve oil seals.**
  Refer to oil seal replacement.
- **Before installing oil seal, install valve-spring seat.**
- **When installing valve, apply engine oil on the valve stem and lip of valve oil seal.**
- **Check whether the valve face is free from foreign matter.**

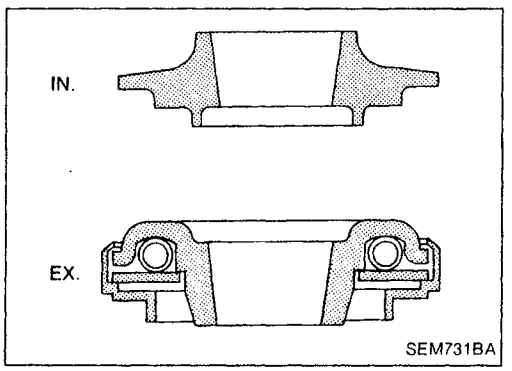

- **Install valve spring retainers on the intake side and valve rotators on the exhaust side.**
- **Valve rotators cannot be disassembled.**

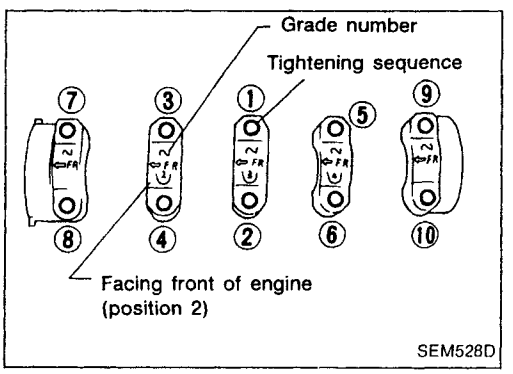

2. Install camshaft and brackets and tighten bracket nuts to the specified torque in two or three stages.
   Camshaft-bracket nuts:
   : 18 - 22 N·m (1.8 - 2.2 kg-m, 13 - 16 ft-lb)

- **Tighten bracket from center to outside.**
- **Apply sealant to brackets No. 1 and No. 5.**
- **When installing brackets, set camshaft so that the pin of camshaft front head is uppermost.**
- **Install new camshaft oil seals.**
  Refer to oil seal replacement.

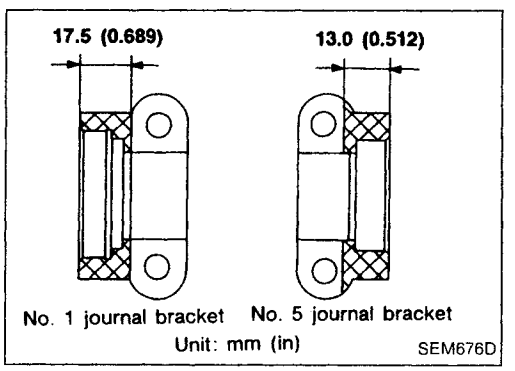

Simpo PDF Merge and Split Unregistered Version - http://www.simpopdf.com

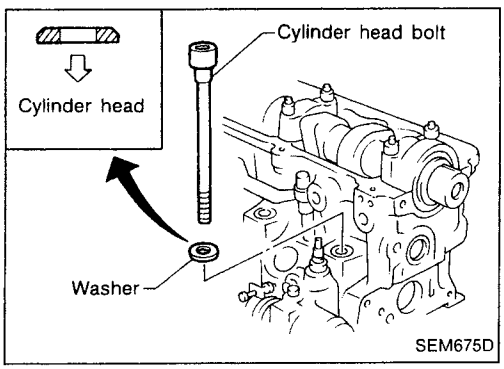

Installation

1. Install cylinder head gasket.
- **When replacing only cylinder head gasket, install same grade gasket as the one formerly used.**
- **When replacing or repairing cylinder block, piston, connecting rod and crankshaft, select gasket referring to "Selecting cylinder head gasket".**
- **Pay attention to the direction of the cylinder head bolt washer as shown in the figure.**

2. Install cylinder head and tighten cylinder head bolts according to the following sequence.

Tightening procedure

- **Apply engine oil to threads and underhead seating face of each bolt.**

1. Tighten bolts in numerical order shown in the figure following steps below.
   - ⓐ 39 N·m (4.0 kg-m, 29 ft-lb)
   - ⓑ 83 - 93 N·m (8.5 - 9.5 kg-m, 61.2 - 68.6 ft-lb)
   - ⓒ Return to 0 N·m (0 kg-m, 0 ft-lb)
   - ⓓ 39 N·m (4.0 kg-m, 29 ft-lb)
   - ⓔ Tighten to 75 - 80°

   If it is difficult to check tightening angle of bolt, tighten to 83 to 93 N·m (8.5 to 9.5 kg-m, 61 to 69 ft-lb).

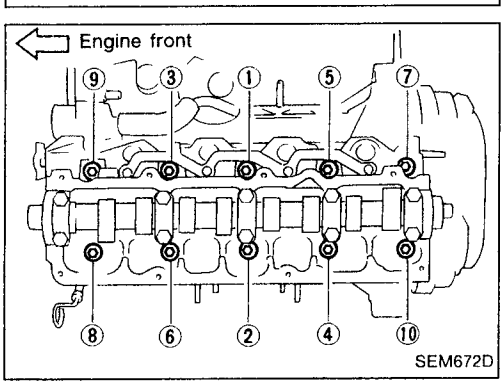

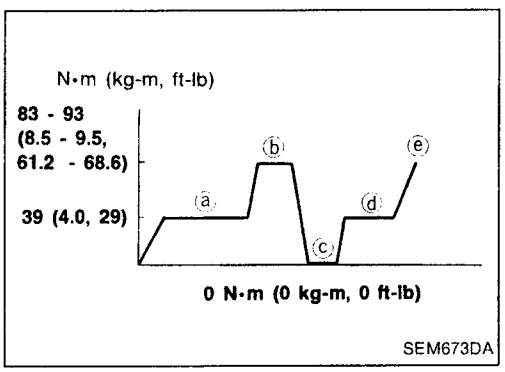

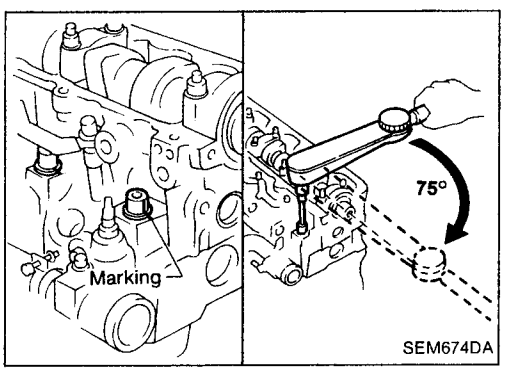

2. Install rocker cover.
- Install rocker cover in the sequence shown at left.

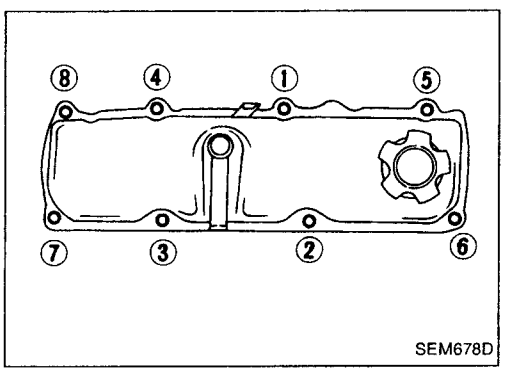

Simpo PDF Merge and Split Unregistered Version - http://www.simpopdf.com

Installation (Cont'd)

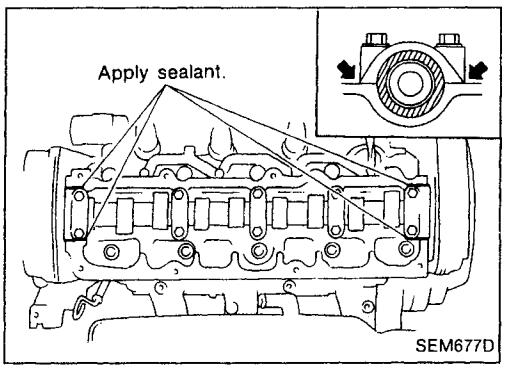

- Apply sealing compound (THREE-BOND No. 10 or equivalent) to both ends of brackets No. 1 and No. 5.

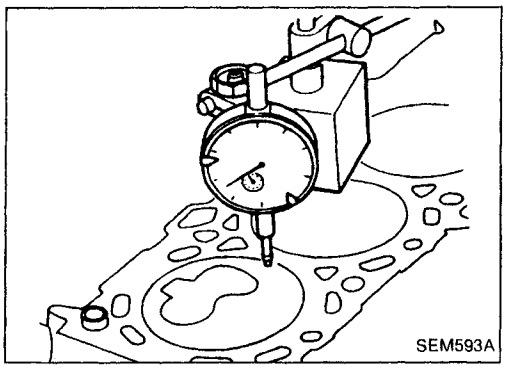

Selecting cylinder head gasket

When replacing only cylinder head gasket, install the same grade (Number of notches) gasket as the one formerly used.

Step 1

Measure projection of piston to cylinder head surface.

a) Set dial gauge and needle on cylinder block and adjust dial gauge to zero.
b) Set dial gauge needle at measuring point on piston, taking care not to disturb its zero setting.
c) Rotate crankshaft around the top dead center position.

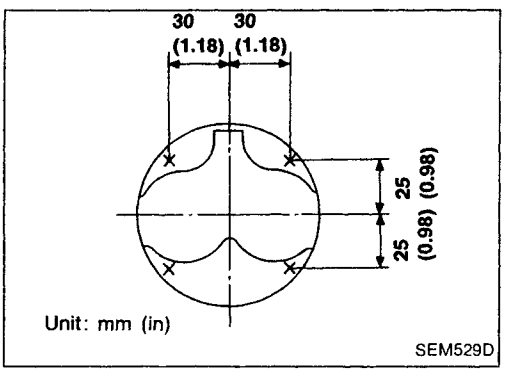

d) Read and write down the maximum value.
e) Reset dial gauge on cylinder block and confirm that zero setting has not been disturbed during measurement.
f) Repeat steps b through d for all measuring points as illustrated and for each cylinder.

- Be sure that piston whose projection is being measured is at its TDC.

Step 2

Calculate the average value of measurements taken for each piston.

Step 3

Calculate the average value of measurements for all pistons from the values obtained from step 2.

Step 4

Round off the value obtained.

Step 5

Determine required thickness of gasket, referring to chart A.

Simpo PDF Merge and Split Unregistered Version - http://www.simpopdf.com

Installation (Cont'd)

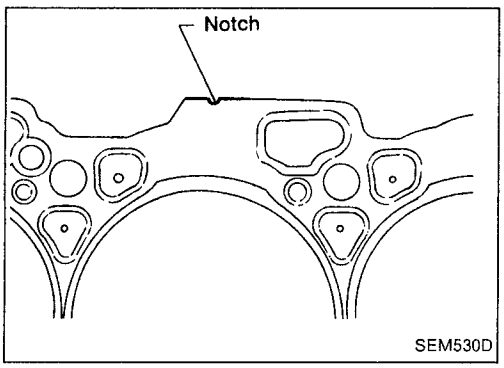

Relation between piston average projection and cylinder head gasket (Chart A)

Average value of piston projections mm (in)	Gasket thickness mm (in)		Grade (Number of notches)
	New parts	In assembly	
Less than 0.505 (0.0199)	1.25 (0.0492)	$1.1^{+0.03}_{-0.03}$ ($0.0433^{+0.0012}_{-0.0012}$)	0
	1.30 (0.0512)	$1.15^{+0.05}_{-0.05}$ ($0.0453^{+0.0020}_{-0.0020}$)	1
0.505 - 0.555 (0.0199 - 0.0219)	1.35 (0.0931)	$1.20^{+0.05}_{-0.05}$ ($0.0472^{+0.0020}_{-0.0020}$)	2
Over 0.555 (0.0219)	1.40 (0.0551)	$1.25^{+0.05}_{-0.05}$ ($0.0492^{+0.0020}_{-0.0020}$)	3

Step 6
Check if the average value of each projection obtained from step 2 is larger than the max. value of the standard projection (of selected gasket) incremented by 0.05 mm (0.0020 in).
If so, use gasket that is 1 grade thicker. If not so, use gasket as selected in step 4.

Example

Unit: mm (in)

Step	Cylinder No. / Item	1				2				3				4			
1.	Measured value	M1	M2	M3	M4	M1	M2	M3	M4	M1	M2	M3	M4	M1	M2	M3	M4
		0.53 (0.0209)	0.56 (0.0220)	0.53 (0.0209)	0.56 (0.0220)	0.59 (0.0232)	0.55 (0.0217)	0.59 (0.0232)	0.55 (0.0217)	0.53 (0.0209)	0.58 (0.0228)	0.57 (0.0224)	0.54 (0.0213)	0.58 (0.0228)	0.51 (0.0201)	0.52 (0.0205)	0.57 (0.0224)
2.	Average value of each piston	0.545 (0.0215)				0.57 (0.0224)				0.555 (0.0219)				0.545 (0.0215)			
3.	Average value of all pistons	0.55375 (0.02180)															
4.	Round off value	0.554 (0.0218)*1															
5.	Determined gasket thickness (Temporarily)	1.20 (0.0472) (Grade B)															
6.	X: Maximum value of standard projection of selected gasket ... 0.555 (0.0219) (in chart A) + 0.05 (0.0020) = 0.605 (0.0238) Y: Maximum value in step 2 = 0.57 (0.0224) The relationship between X and Y is "X > Y".*2																
7.	Determined gasket thickness (Finally)	1.20 (0.0472) (Grade B)*2															

***1: If the average value of projections for all pistons is, for example, 0.553 (7) 5, as shown in the table above, it should be rounded off as follows:**
If the digit in the forth decimal place (which is enclosed by a circle in this case) is smaller than 5, the average value should be regarded as 0.553 mm (0.0218 in); if it is larger than 5, the average value should be regarded as 0.554 mm (0.0218 in).
***2: If X < Y, then the thicker grade C gasket must be used.**

Simpo PDF Merge and Split Unregistered Version - http://www.simpopdf.com

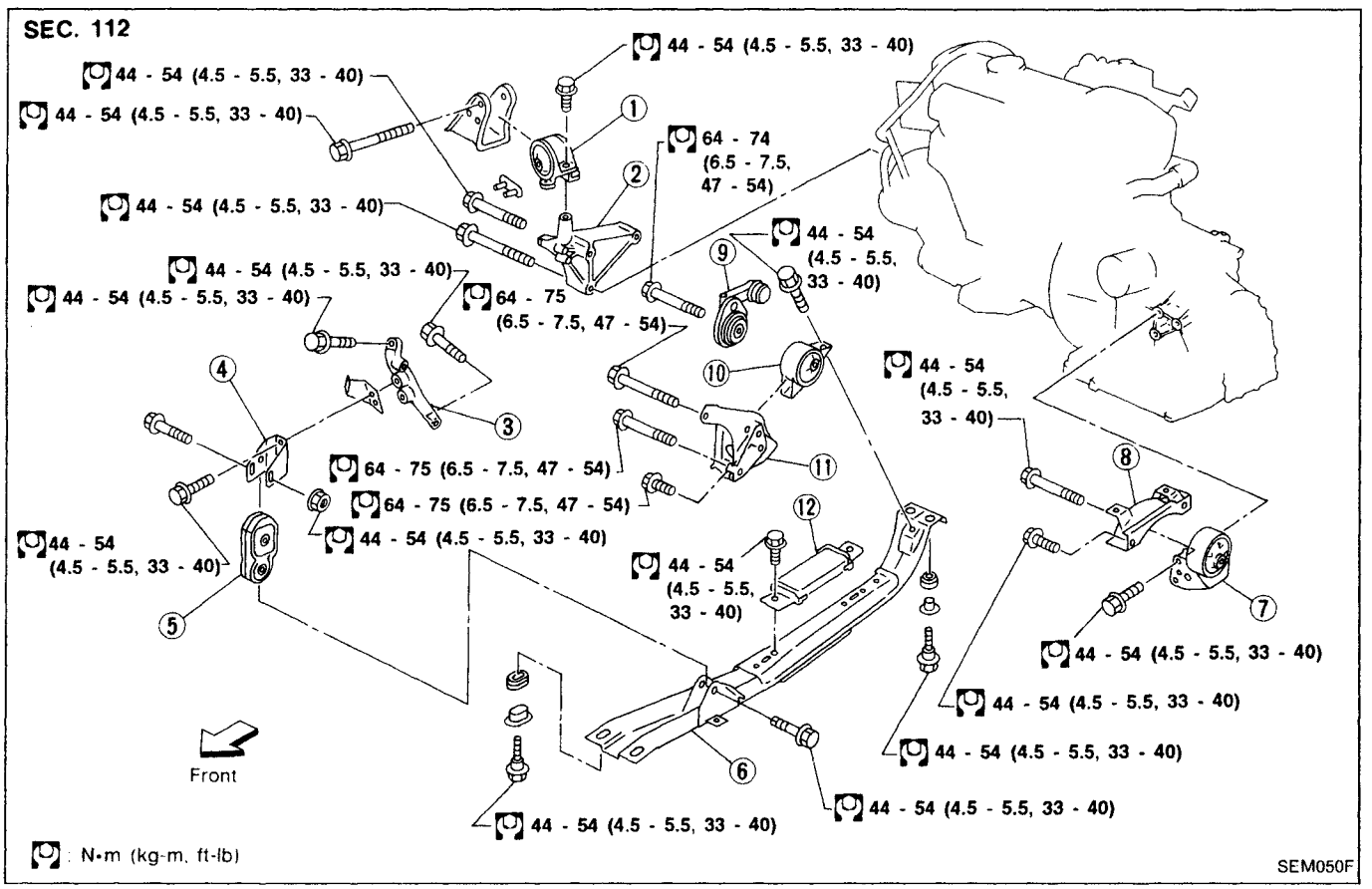

① Engine front mounting
② Engine mounting bracket
③ Gusset
④ Buffer rod bracket
⑤ Buffer rod
⑥ Center member
⑦ Transaxle mounting
⑧ Transaxle mounting bracket
⑨ Roll damper
⑩ Engine rear mounting
⑪ Engine rear mounting bracket
⑫ Dynamic damper

WARNING:

- **Situate vehicle on a flat and solid surface.**
- **Place chocks at front and back of rear wheels.**
- **Do not remove engine until exhaust system has completely cooled off. Otherwise, you may burn yourself and/or fire may break out in the fuel line.**
- **For safety during subsequent steps, the tension of wires should be slackened against the engine.**
- **Before removing front axle from transaxle, place safety stands under designated front supporting points. Refer to GI section for lifting points and towing.**
- **Be sure to hoist engine and transaxle in a safe manner.**
- **For engines not equipped with engine slingers, attach proper slingers and bolts described in PARTS CATALOG.**

CAUTION:

- **When lifting engine, be sure to clear surrounding parts. Take special care for accelerator wire casing, brake lines and brake master cylinder.**
- **In hoisting the engine, always use engine slingers in a safe manner.**
- **In removing drive shaft, be careful not to damage transaxle oil seal.**

Simpo PDF Merge and Split Unregistered Version - http://www.simpopdf.com

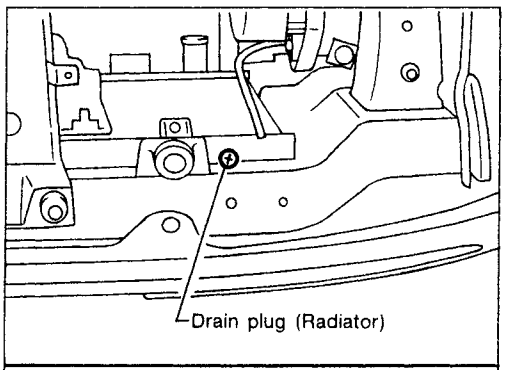

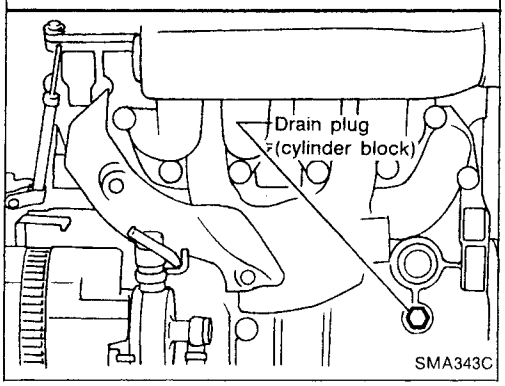

1. Remove engine undercovers and splash covers.
2. Remove front exhaust tube.
3. Drain coolant and disconnect lower water hose from radiator.
4. Drain transaxle oil.
5. Disconnect electrical wiring from cooling fan.
6. Remove power steering mounting bolt.
7. Drain coolant from cylinder block.
8. Disconnect water hoses and remove radiator.
9. Disconnect fuel tubes and vacuum tubes.
10. Release power steering belt adjusting nut and remove power steering pump from engine.
    Bind pump properly to the vehicle.
11. Disconnect or remove electrical wiring where necessary.
12. Release clutch lever cable and accelerator cable.
13. Remove speedometer pinion connector from transaxle.
14. Remove front wheels.

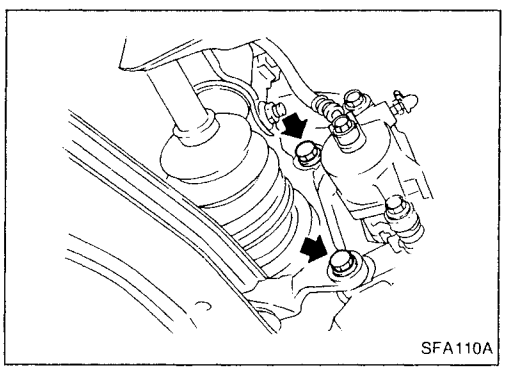

15. Remove brake caliper mounting bolts and bind caliper properly to vehicle (coil spring) LH & RH.

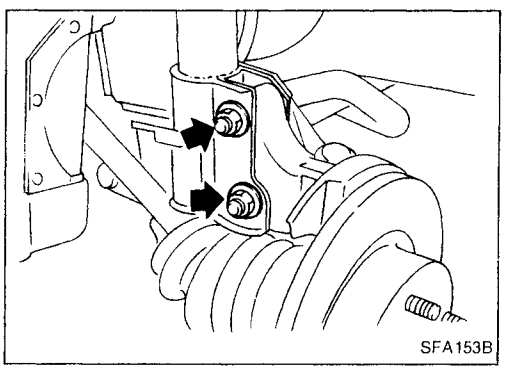

16. Remove lower ball joint nuts and release the upper hub mounting bolts.
17. Release steering arm ball joint using a suitable tool. Remove drive shafts from transaxle.
    1) RH: Split drive shaft center thrust bearing.
    2) RH & LH: Remove hub mounting bolts and remove drive shaft carefully from transaxle.

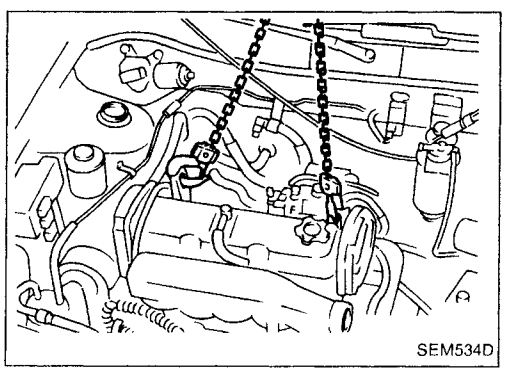

18. Mount suitable slingers to cylinder head. Fit hoist with studge and hoist engine to release force on engine mountings.

Simpo PDF Merge and Split Unregistered Version - http://www.simpopdf.com

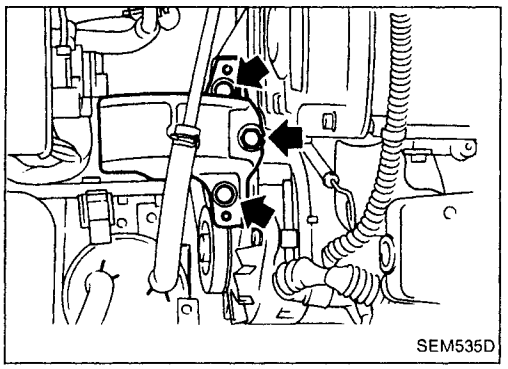
SEM535D

19. Remove engine mounting bracket.

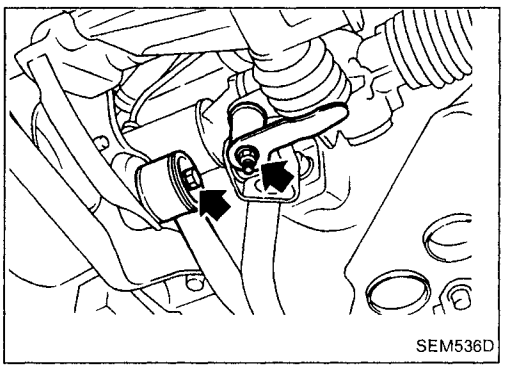
SEM536D

20. Release transaxle shift linkages.

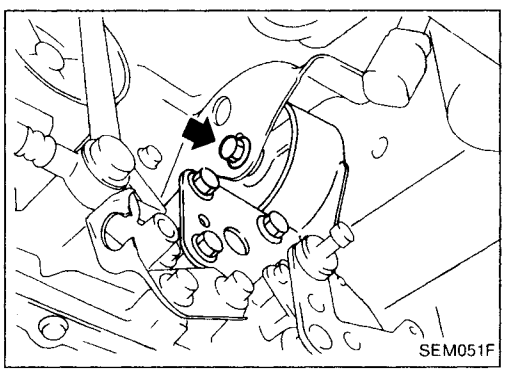
SEM051F

21. Release transaxle mounting.

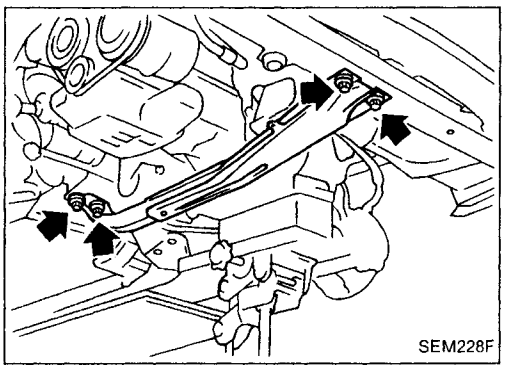
SEM228F

22. Remove center member from chassis.

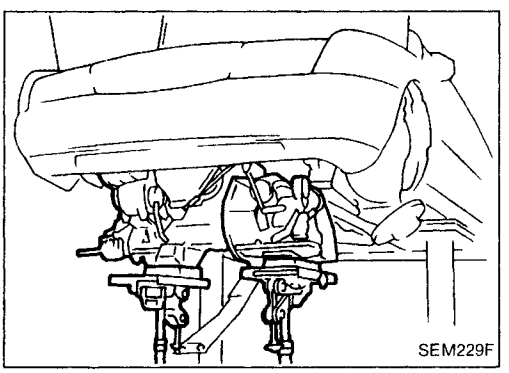
SEM229F

23. Remove engine with transaxle as shown.

Simpo PDF Merge and Split Unregistered Version - http://www.simpopdf.com

SEC. 110•120

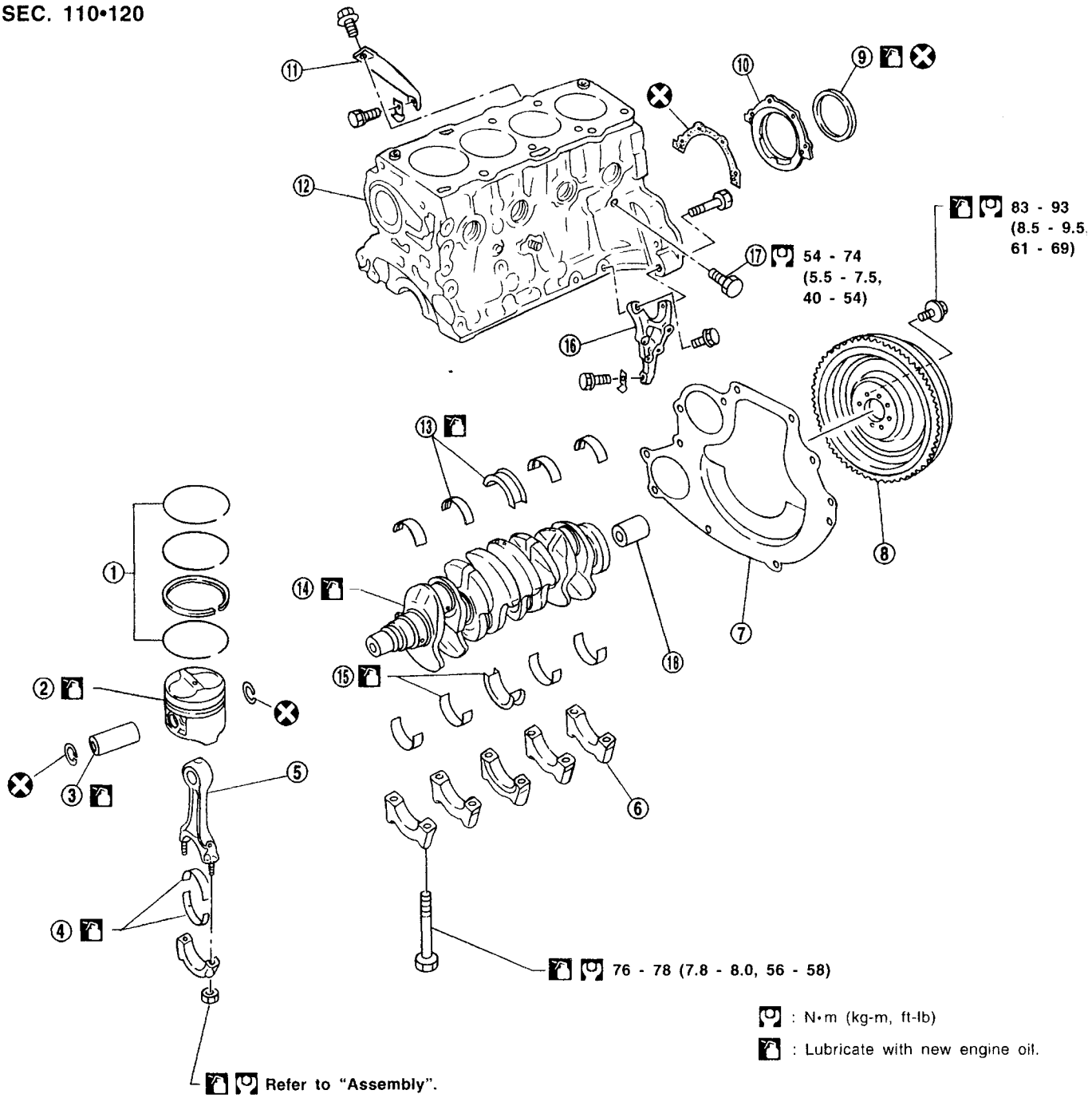

① Piston ring
② Piston
③ Piston pin
④ Connecting rod bearing
⑤ Connecting rod
⑥ Main bearing cap
⑦ Rear plate
⑧ Flywheel
⑨ Rear oil seal
⑩ Rear oil seal retainer
⑪ Gusset
⑫ Cylinder block
⑬ Main bearing
⑭ Crankshaft
⑮ Main bearing
⑯ Gusset
⑰ Drain plug
⑱ Pilot bushing

Simpo PDF Merge and Split Unregistered Version - http://www.simpopdf.com

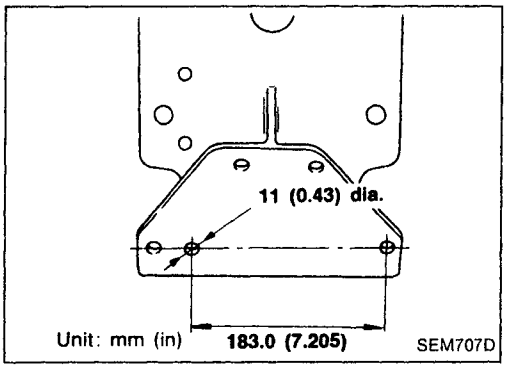

Preparation

- Drill a hole into the attachment (KV10108101).

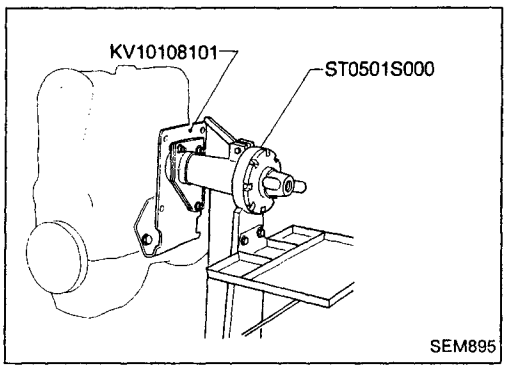

Disassembly

PISTON AND CRANKSHAFT

1. Place engine on a work stand.
2. Drain coolant and oil.
3. Remove timing belt.
4. Remove water pump.
5. Remove oil pan and oil pump.
6. Remove cylinder head.
7. Remove pistons with connecting rods.

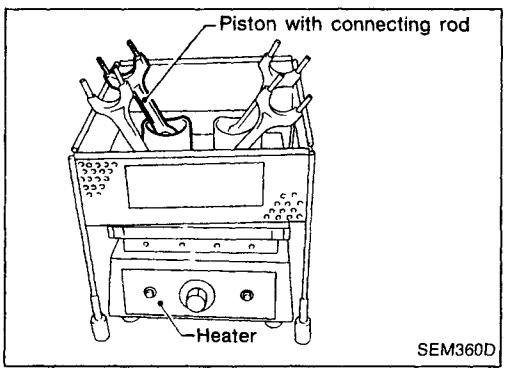

When disassembling piston and connecting rod, heat piston to 60 to 70°C (140 to 158°F) or use piston pin press stand at room temperature.

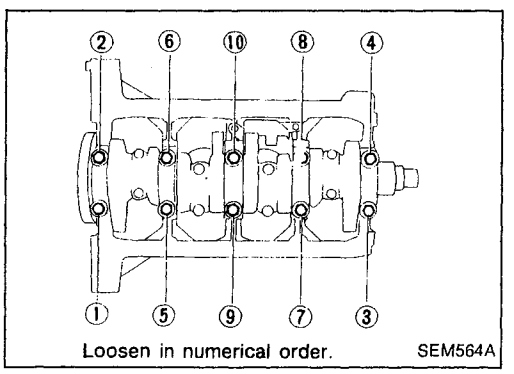

8. Remove bearing cap and crankshaft.

Place the bearings and caps in their proper order.
Upper bearings (cylinder block side) have oil groove.

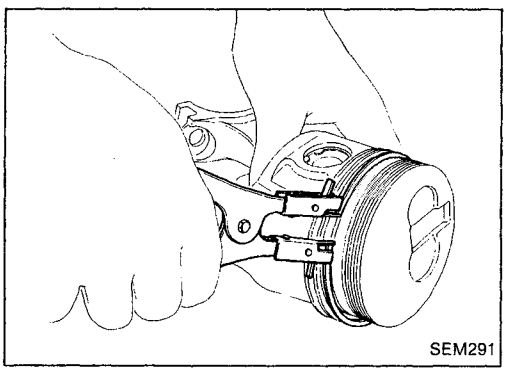

9. Remove piston rings with a tool.

Simpo PDF Merge and Split Unregistered Version - http://www.simpopdf.com

Inspection

PISTON AND PISTON PIN CLEARANCE

1. Measure outer diameter of piston pin and inner diameter of piston pin hole.
2. Calculate piston to piston pin clearance.

Pin diameter:
24.994 - 25.000 mm (0.9840 - 0.9843 in)
Pin hole diameter:
24.991 - 24.999 mm (0.9839 - 0.9842 in)
Clearance:
–0.004 to 0 mm (–0.0002 to 0 in)
(Interference fit)

Service parts are available as a set of piston and piston pin.

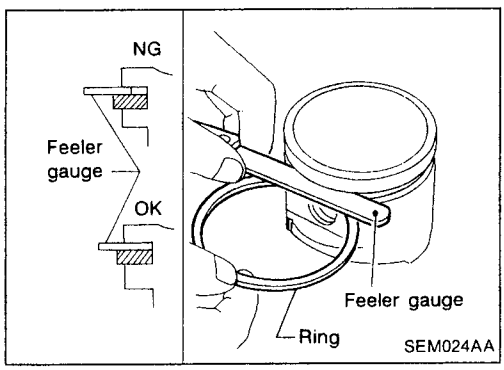

PISTON RING SIDE CLEARANCE

Side clearance:

Unit: mm (in)

	Standard	Limit
Top ring	0.060 - 0.095 (0.0024 - 0.0037)	0.10 (0.0039)
2nd ring	0.040 - 0.075 (0.0016 - 0.0030)	0.10 (0.0039)
Oil ring	0.030 - 0.070 (0.0012 - 0.0028)	0.10 (0.0039)

If out of specification, replace piston and/or piston ring assembly.

Simpo PDF Merge and Split Unregistered Version - http://www.simpopdf.com

Inspection (Cont'd)

PISTON RING END GAP

End gap:

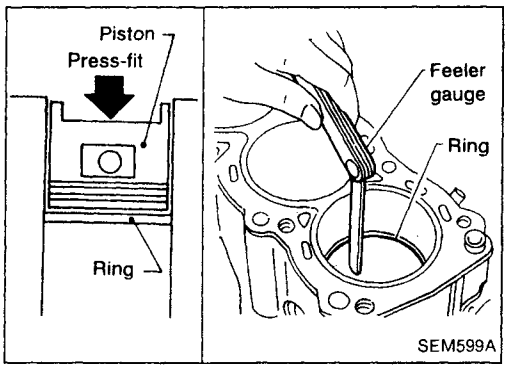

Unit: mm (in)

	Standard	Limit
Top ring	Bore grade 1, 2, 3 0.20 - 0.30 (0.0079 - 0.0118) Bore grade 4, 5 0.12 - 0.22 (0.0047 - 0.0087)	1.0 (0.039)
2nd ring	0.38 - 0.53 (0.0150 - 0.0209)	0.7 (0.028)
Oil ring	0.30 - 0.55 (0.0118 - 0.0217)	0.6 (0.024)

- If out of specification, replace piston ring. If gap exceeds maximum limit with new ring, rebore cylinder and use oversize piston and piston rings.

Refer to SDS (EM-174).

- When replacing the piston, check the cylinder block surface for scratches or evidence of seizure. If scratches or evidence of seizure is found, hone or replace the cylinder block.

MAIN BEARING CLEARANCE

1. Install main bearings to cylinder block and main bearing cap.
2. Install main bearing cap with bearing to cylinder block.

Tighten all bolts in two or three stages.

: 44 - 54 N·m (4.5 - 5.5 kg-m, 33 - 40 ft-lb)

3. Measure inside diameter "A" of main journal.

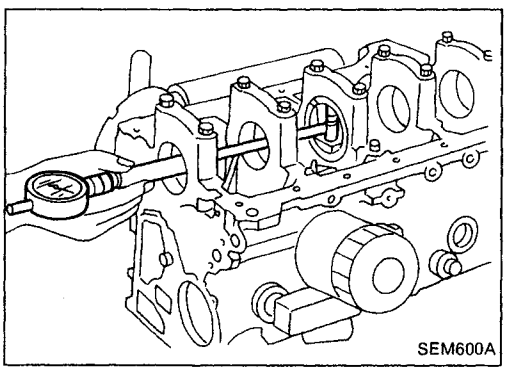

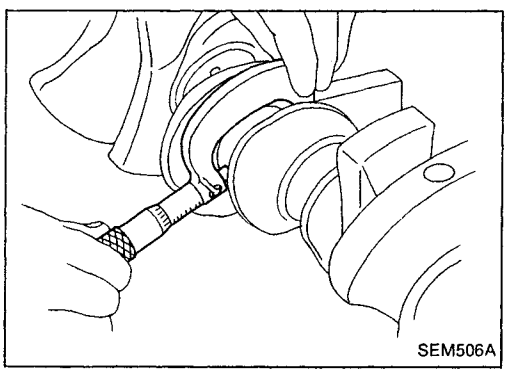

4. Measure outside diameter "Dm" of main journal of crankshaft.

Journal diameter:

Refer to SDS (EM-174).

5. Calculate main bearing clearance.

Main bearing clearance = A – Dm

Standard:

0.039 - 0.065 mm (0.0015 - 0.0026 in)

- If it exceeds the limit, replace the bearing.

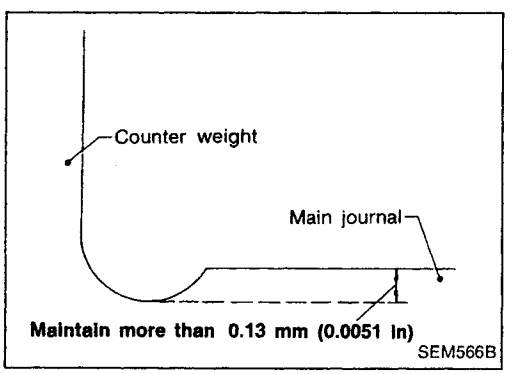

- If crankshaft main journal is worn or shows any abnormality, regrind crank journal and use undersized bearings to maintain the specified oil clearance.
- **Refer to SDS for regrinding crankshaft journal diameter and available service parts (EM-174).**
- **When regrinding crankshaft journal, do not grind fillet-roll.**

Simpo PDF Merge and Split Unregistered Version - http://www.simpopdf.com

Inspection (Cont'd)

- If either bearing, crankshaft or cylinder block is replaced with a new one, select main bearing according to the following table. These numbers are punched in either Arabic or Roman numerals.

		Main bearing housing grade number		
		0	1	2
		Main bearing grade number		
Crankshaft main journal grade number	0	0	1	2
	1	1	2	3
	2	2	3	4

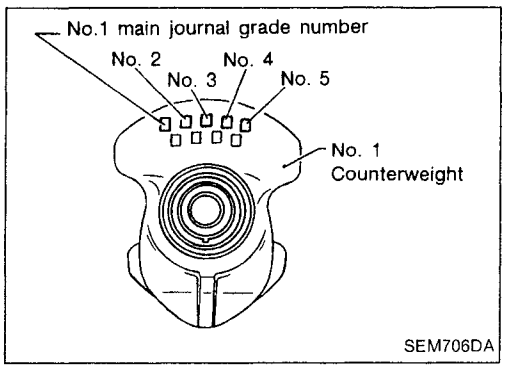

Identification color:

Grade 0	Yellow
Grade 1	Green
Grade 2	Brown
Grade 3	Black
Grade 4	Blue

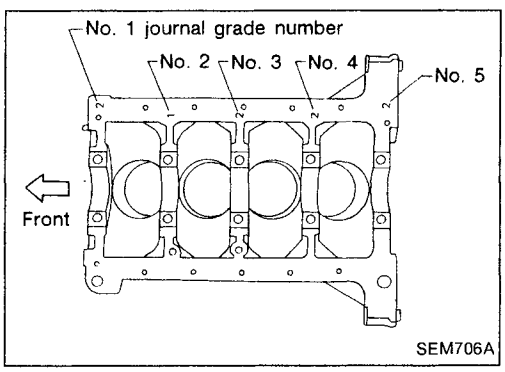

For example:
Main journal grade number: 1
Crankshaft journal grade number: 2
Main bearing grade number = 1 + 2 = 3

Main bearing thickness:
Refer to SDS (EM-175).

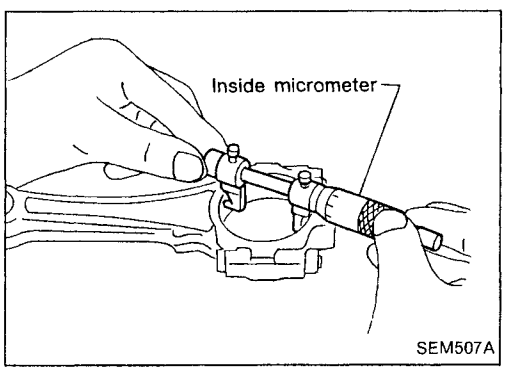

CONNECTING ROD BEARING CLEARANCE (Big end)

1. Install connecting rod bearing to connecting rod and cap.
2. Install connecting rod cap with bearing to connecting rod.

Apply oil to the thread portion of bolts and seating surface of nuts.

: 37 - 45 N·m (3.8 - 4.6 kg-m, 27 - 33 ft-lb)

3. Measure inside diameter "C" of bearing.

Simpo PDF Merge and Split Unregistered Version - http://www.simpopdf.com

Inspection (Cont'd)

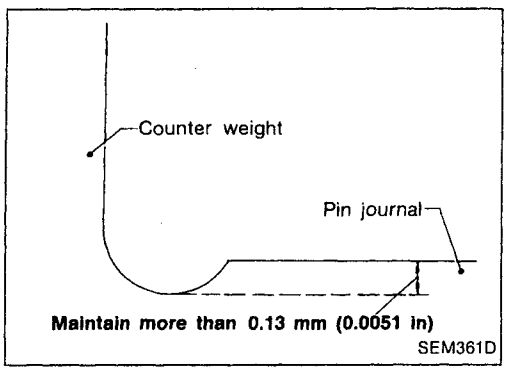

4. Measure outside diameter "Dp" of crankshaft pin journal.
5. Calculate connecting rod bearing clearance.

Connecting rod bearing clearance = C – Dp

Standard:

0.031 - 0.055 mm (0.0012 - 0.0022 in)

- If it exceeds the limit, replace the bearing.
- If crankshaft pin journal is worn or shows any abnormality, regrind crank pin and use undersized bearings to maintain the specified oil clearance.
- **Refer to SDS for regrinding diameter of crankshaft pin and available service parts (EM-174).**
- **When regrinding crankshaft pin, do not grind fillet-roll.**

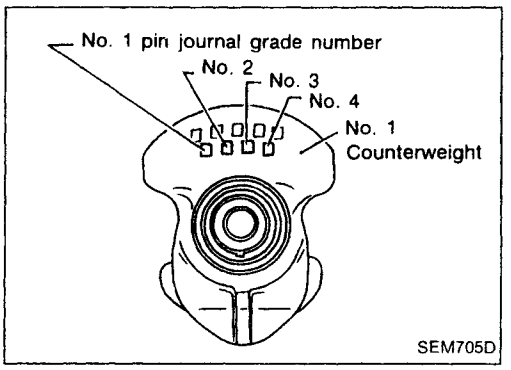

Selective connecting rod bearing

- If either bearings or crankshaft are being replaced with new ones, select connecting rod bearings according to the following table. Grade numbers are punched in either Arabic or Roman numerals.

	Crankshaft pin journal grade number		
	0	1	2
Connecting rod baring grade number	0	1	2

Identification color

Grade 0: Black

Grade 1: Yellow

Grade 2: Blue

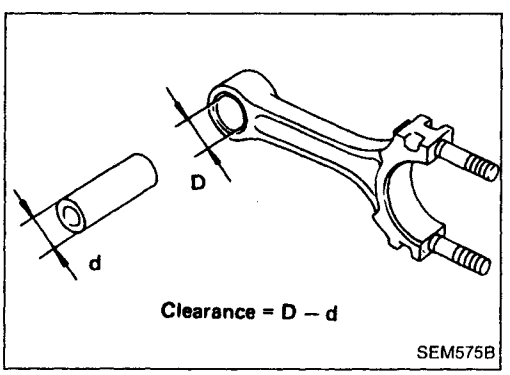

CONNECTING ROD AND PISTON PIN CLEARANCE (Small end)

Clearance (D – d):

0.025 - 0.044 mm (0.0010 - 0.0017 in)

- If clearance exceeds the specifications, replace the bearing.

Simpo PDF Merge and Split Unregistered Version - http://www.simpopdf.com

Inspection (Cont'd)

Bearing replacement

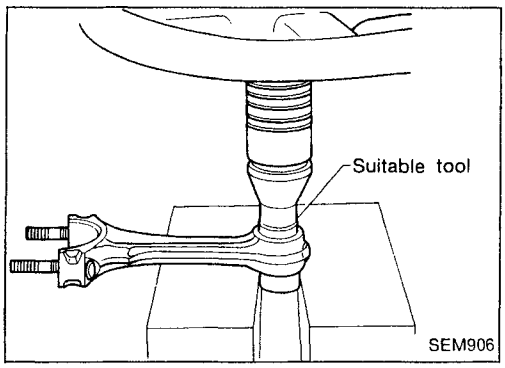

1. Remove bearing with a suitable tool.

Do not scratch inner surface of connecting rod.

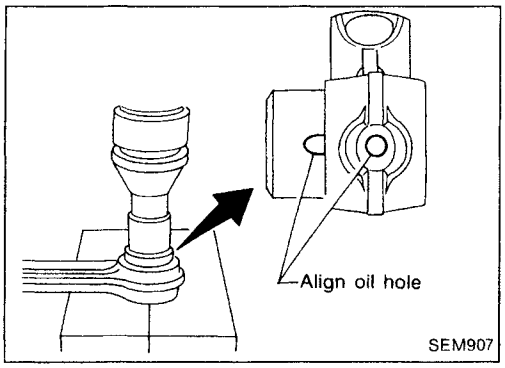

2. Install new bearing with oil holes aligned correctly.
3. Ream bore using a suitable tool.

Ream bore:

25.025 - 25.038 mm (0.9852 - 0.9857 in)

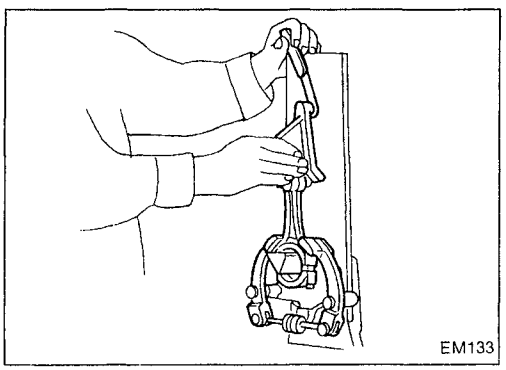

CONNECTING ROD BEND AND TORSION

Bend and torsion [per 100 mm (3.94 in) length]:

Bend Less than 0.025 mm (0.0010 in)

Torsion Less than 0.025 mm (0.0010 in)

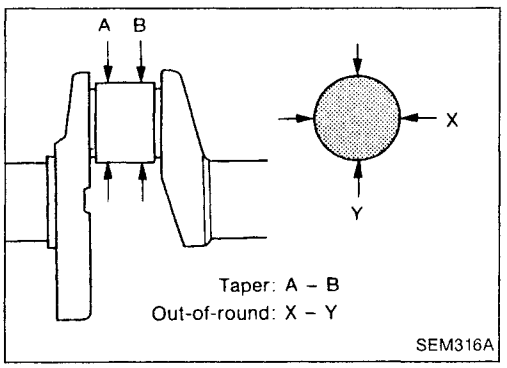

CRANKSHAFT

1. Check crankshaft journals and pins for score, bias, wear or cracks. If faults are minor, correct with fine crocus cloth.
2. Check journals and pins with a micrometer for taper and out-of-round.

Out-of-round (X – Y):

Less than 0.005 mm (0.0002 in)

Taper (A – B):

Less than 0.005 mm (0.0002 in)

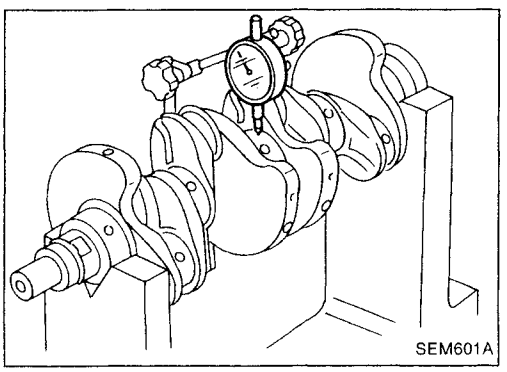

3. Check crankshaft runout.

Runout (Total indicator reading):

Less than 0.05 mm (0.0020 in)

Simpo PDF Merge and Split Unregistered Version - http://www.simpopdf.com

Inspection (Cont'd)

CYLINDER BLOCK DISTORTION

Clean upper face of cylinder block and measure the distortion.

Limit:

0.10 mm (0.0039 in)

If out of specification, resurface it.

The resurfacing limit of cylinder block is determined by cylinder head resurfacing in an engine.

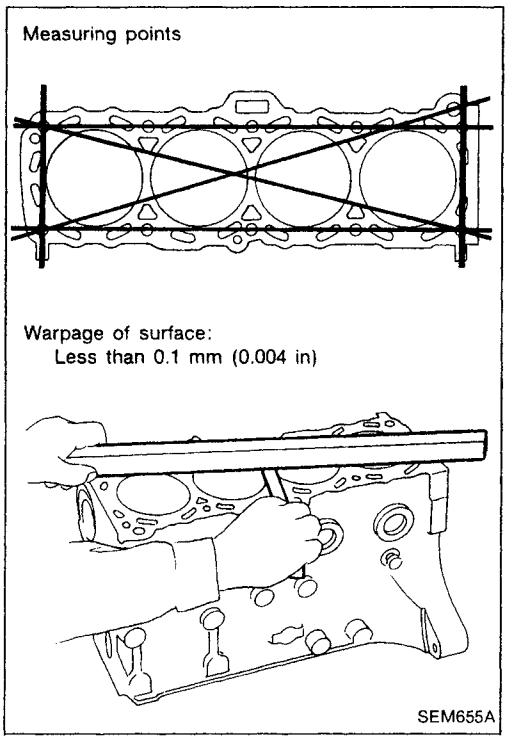

Amount of cylinder head resurfacing is "A".
Amount of cylinder block resurfacing is "B".

The maximum limit is as follows:

A + B = 0.1 mm (0.004 in)

If necessary, replace cylinder block.

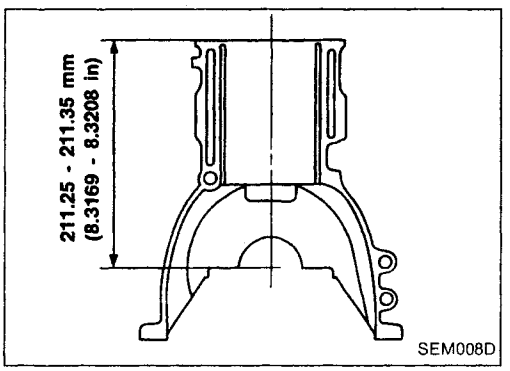

CYLINDER BORE

1. Check for scratches or seizure. If seizure is found, hone bore.
2. Using a bore gauge, measure cylinder bore for wear, out-of-round or taper.

Standard bore diameter:

84.500 - 84.550 mm (3.3268 - 3.3287 in)

Unit: mm (in)

Bore wear limit	0.2 (0.008)
Out-of-round (X – Y) standard	0.015 (0.0006)
Taper (A – B) standard	0.010 (0.0004)

If it exceeds the limit, rebore all four cylinders. Replace cylinder block if necessary.

If cylinder block or piston is replaced, match piston grade with grade number on cylinder block upper surface.

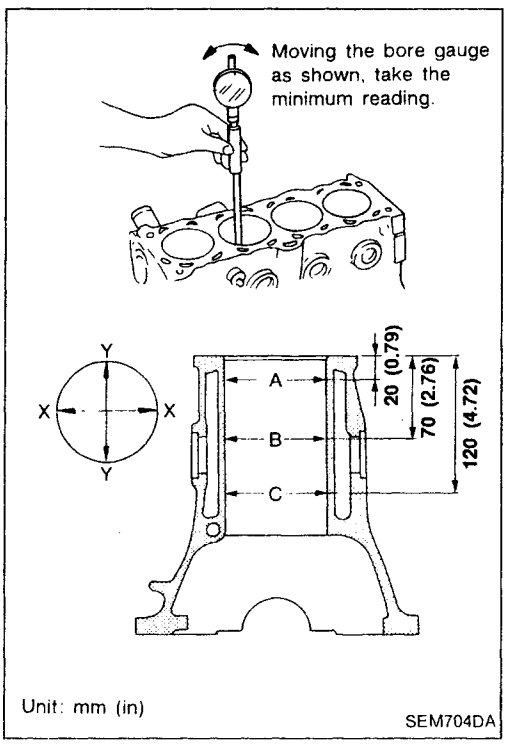

Simpo PDF Merge and Split Unregistered Version - http://www.simpopdf.com

Inspection (Cont'd)

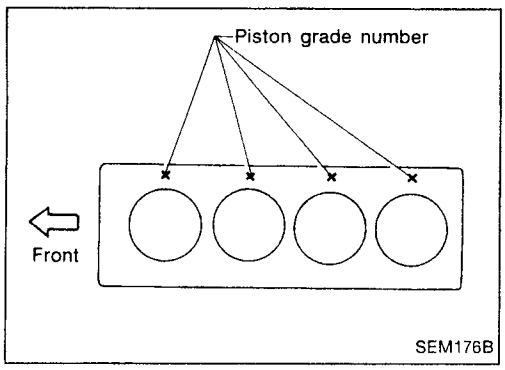

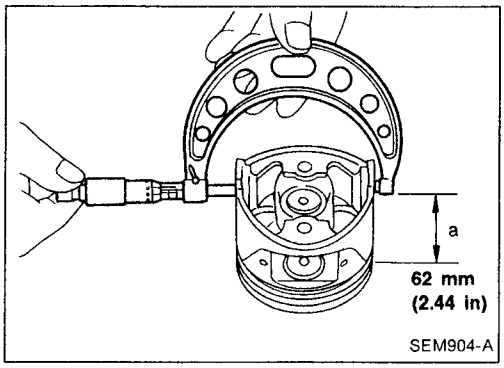

Reboring

1. The size to which cylinders must be honed, is determined by adding piston-to-cylinder clearance to the piston skirt diameter "A".
   Dimension "a":
   Approximately 62 mm (2.44 in)
   Rebored size calculation
   D = A + B – C = A + [0.03 to 0.05 mm (0.0012 to 0.0020 in)]
   where,
   D : Honed diameter
   A : Skirt diameter as measured
   B : Piston-to-wall clearance
   C : Machining allowance 0.02 mm (0.0008 in)
2. Install main bearing caps and tighten bolts to the specified torque. This will prevent distortion of cylinder bores.
3. Cut cylinder bores in the order of 2-4-1-3.

Do not cut too much out of the cylinder bore at a time. Cut only 0.05 mm (0.0020 in) or so in diameter at a time.

4. Hone the cylinders to the required size referring to SDS (EM-173).
5. Measure the finished cylinder bore for out-of-round and taper.

Measurement of a just machined cylinder bore requires utmost care since it is expanded by cutting heat.

PISTON-TO-BORE CLEARANCE

Using micrometer

1. Measure piston and cylinder bore diameter.
   Piston diameter "A":
   Refer to SDS (EM-174).
   Measuring point "a" (Distance from the bottom):
   Approximately 62 mm (2.44 in)
   Bore diameter "D":
   Refer to SDS (EM-173).
   Measuring point (Distance from the top):
   Approximately 70 mm (2.76 in)
2. Check that piston clearance is within the specification.
   Piston clearance (D – A):
   0.025 - 0.045 mm (0.0010 - 0.0018 in)

Simpo PDF Merge and Split Unregistered Version - http://www.simpopdf.com

Inspection (Cont'd)

Using feeler gauge

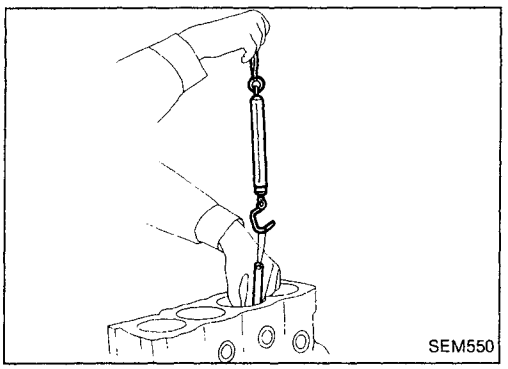

1. Set piston and feeler gauge with spring scale.
2. Measure extracting force while pulling up scale slowly.

Feeler gauge used:
0.05 - 0.07 mm (0.0020 - 0.0028 in)
Extracting force:
7.8 - 14.7 N (0.8 - 1.5 kg, 1.8 - 3.3 lb)

Assembly

PISTON

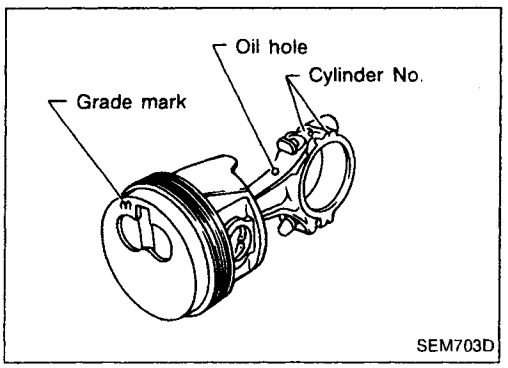

- **Numbers stamped on connecting rod and cap correspond to each cylinder. Care should be taken to avoid a wrong combination including bearing and connecting rod direction.**

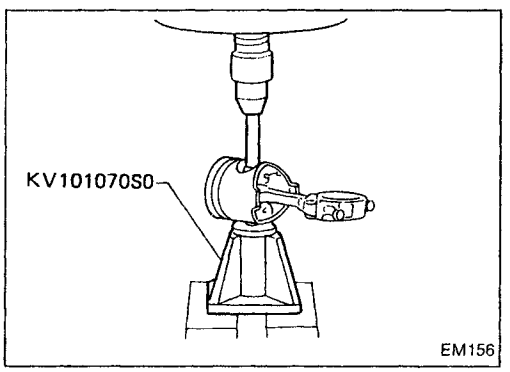

- **Install new snap ring on one side of piston pin hole.**
- **When assembling piston and connecting rod with piston pin, heat piston to between 60 and 80°C (140 and 176°F) and install piston pin with a suitable tool.**
- **Install new snap ring.**
- **After assembling, ascertain that piston swings smoothly.**

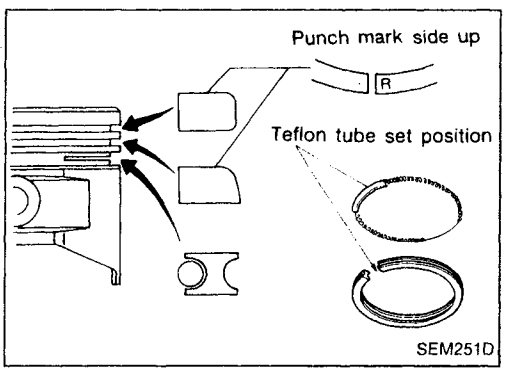

- Install piston rings with a suitable tool.

Selective top ring; When installing new top ring or replacing cylinder block, select top ring to adjust ring gap.

	Cylinder bore grade	
	1, 2, 3	4, 5
Top ring grade No.	No mark	S

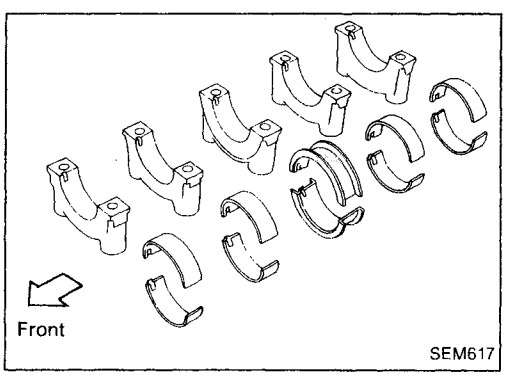

CRANKSHAFT

1. Set main bearings in the proper position on cylinder block and main bearing caps.

- **If either crankshaft, cylinder block or main bearing is reused again, it is necessary to measure main bearing clearance.**
- **Upper bearings (cylinder block side) have oil groove.**
- **Apply new engine oil to bearing surfaces.**

Simpo PDF Merge and Split Unregistered Version - http://www.simpopdf.com

Assembly (Cont'd)

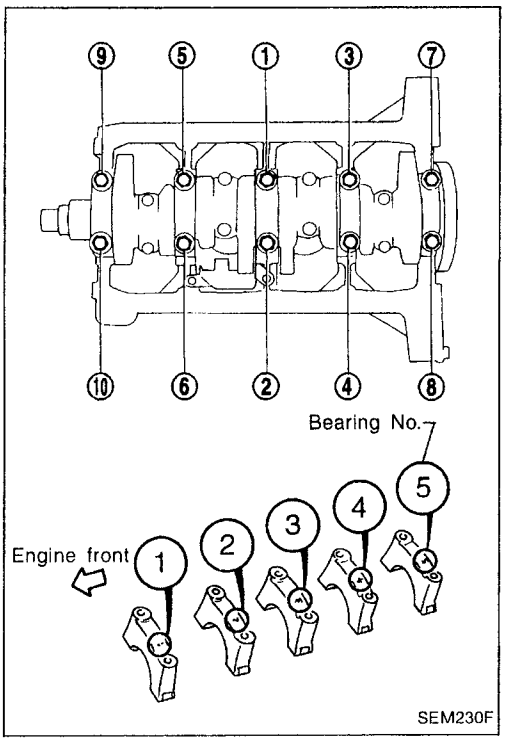

SEM230F

2. Apply engine oil to main bearing surfaces on crankshaft journal side.
3. Install crankshaft and main bearing caps.
   Main bearing cap bolt:
   : 44 - 54 N·m (4.5 - 5.5 kg-m, 33 - 40 ft-lb)
4. Tighten main bearing cap bolts.

- **Arrange the parts so that the indicated numbers on bearing caps are in a row from the front of engine.**
- **Tighten bearing cap bolts gradually in two or three stages and outwardly from center bearing in sequence.**
- **After securing bearing cap bolts, ascertain that crankshaft turns smoothly.**
- **Apply new engine oil to threads of bearing cap bolts.**

EM

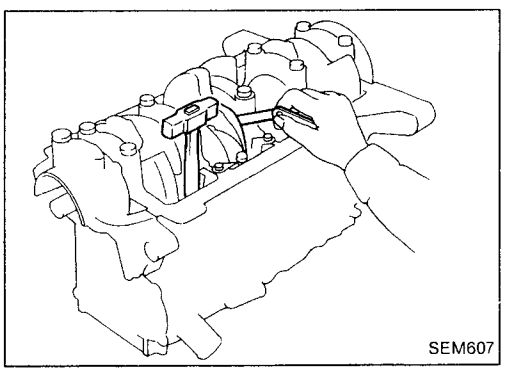
SEM607

5. Measure crankshaft free end play at center bearing.
   Crankshaft free end play:
   Standard
   0.05 - 0.18 mm (0.0020 - 0.0071 in)
   Limit
   0.30 mm (0.0118 in)

PISTON WITH CONNECTING ROD

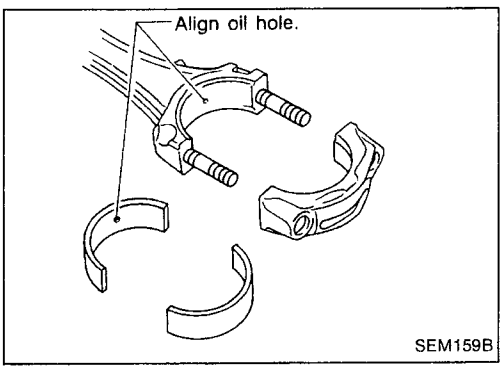

SEM159B

1. Install connecting rod bearings in the connecting rods and connecting rod caps.

- Confirm that correct size of bearings is used.

Refer to "Inspection" (EM-147).

- Install the bearings so that the oil hole in the connecting rod aligns with the oil hole of the bearing.
- **Apply engine oil to connecting rod bearing surfaces on the crankshaft journal side.**

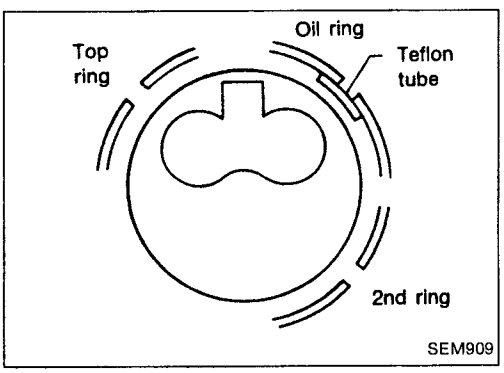

SEM909

- Set piston rings as shown.

Simpo PDF Merge and Split Unregistered Version - http://www.simpopdf.com

Assembly (Cont'd)

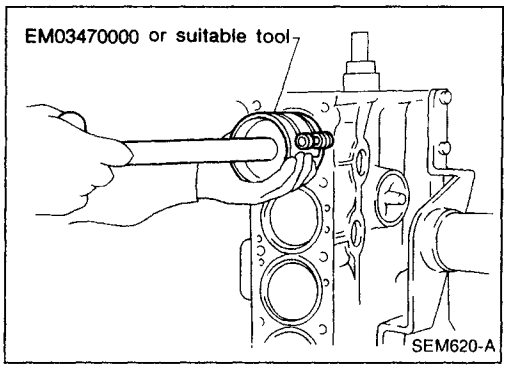

2. Install pistons with connecting rods.
- Install them into corresponding cylinder using Tool.
- **Be careful not to scratch cylinder wall with connecting rod.**
- **Apply engine oil to cylinder wall, piston and bearing.**
- **Arrange so that the front mark on piston head faces to the front of engine.**

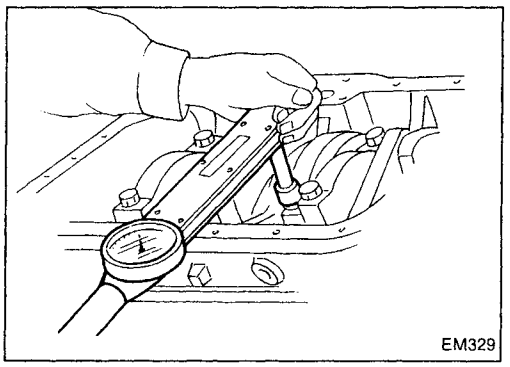

3. Install connecting rod bearing caps.
- **Apply engine oil to the thread of connecting rod bearing nut.**

(1) Tighten connecting rod bearing nut to 15 ± 1 N·m (1.5 ± 0.1 kg-m, 10.8 ± 0.7 ft-lb).
(2) Then tighten an additional $60^{+5^\circ}_{-0^\circ}$ turns with an angular tightening wrench.

: 15 ± 1 N·m (1.5 ± 0.1 kg-m, 10.8 ± 0.7 ft-lb) plus $60^{+5^\circ}_{-0^\circ}$ or
: 37 - 45 N·m (3.8 - 4.6 kg-m, 27 - 33 ft-lb)

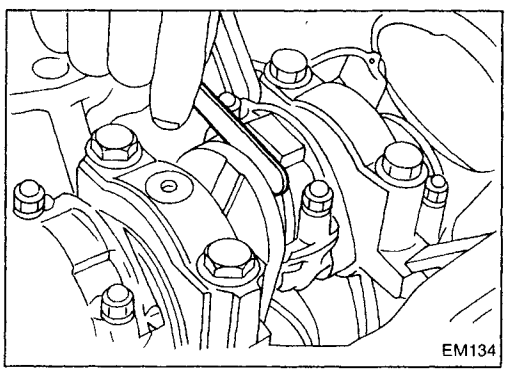

4. Measure connecting rod side clearance.

Connecting rod side clearance (Big end play):
Limit
0.3 mm (0.012 in)

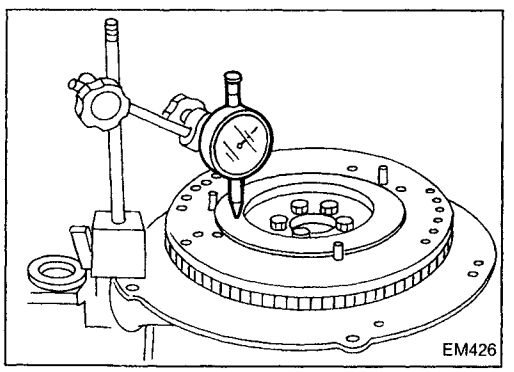

FLYWHEEL RUNOUT

Runout (Total indicator reading):
Less than 0.15 mm (0.0059 in)

Simpo PDF Merge and Split Unregistered Version - http://www.simpopdf.com

General Specifications

GENERAL SPECIFICATIONS

Engine		GA14DE	GA15DE	GA16DE
Classification		Gasoline		
Cylinder arrangement		4, in-line		
Displacement	cm^3 (cu in)	1,392 (84.94)	1,498 (91.41)	1,597 (97.45)
Bore x stroke	mm (in)	73.6 x 81.8 (2.898 x 3.220)	73.6 x 88.0 (2.898 x 3.465)	76.0 x 88.0 (2.992 x 3.465)
Valve arrangement		DOHC		
Firing order		1-3-4-2		
Number of piston rings				
Compression		1*2, 2		
Oil		1		
Number of main bearings		5		
Compression ratio		9.5	9.9	9.8*1, 9.9*2

Valve timing

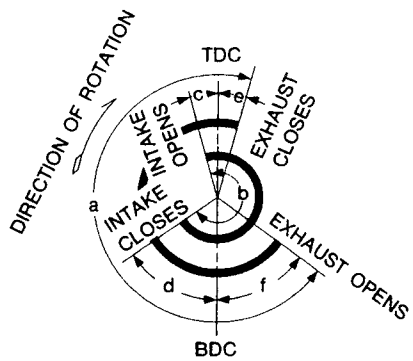

EM120

Unit: degree

	a	b	c	d	e	f
GA14DE	214°	214°	0°	34°	–4°	38°
GA15DE	222°	222°	0°	42°	–4°	46°
GA16DE without VTC	222°	214°	0°	34°	0°	42°
GA16DE with VTC for Australia	222°	236°	–12°	68°	0°	42°
GA16DE with VTC except for Australia	222°	248°	2°	66°	–4°	46°

*1: For Europe and Israel
*2: Except for Europe and Israel

Simpo PDF Merge and Split Unregistered Version - http://www.simpopdf.com

Inspection and Adjustment

ENGINE COMPRESSION PRESSURE

Unit: kPa (bar, kg/cm^2, psi)/rpm

Compression ratio Refer to SDS (EM-155).	Standard	Minimum	Difference limit between cylinders
9.5	1,324 (13.24, 13.5, 192)/350	1,128 (11.28, 11.5, 164)/350	98 (0.98, 1.0, 14)/350
9.8	1,353 (13.53, 13.8, 196)/350	1,157 (11.57, 11.8, 168)/350	
9.9	1,373 (13.7, 14, 199)/350	1,177 (11.8, 12, 171)/350	

CYLINDER HEAD

Unit: mm (in)

	Standard	Limit
Head surface flatness	Less than 0.03 (0.0012)	0.1 (0.004)
Height	117.8 - 118.0 (4.638 - 4.646)	—

VALVE

Unit: mm (in)

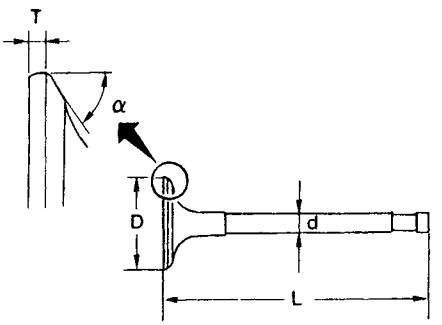

SEM188-b

		GA14DE and GA15DE	GA16DE
Valve head diameter "D"	Intake	28.9 - 29.2 (1.138 - 1.150)	29.9 - 30.2 (1.177 - 1.189)
	Exhaust	23.9 - 24.2 (0.941 - 0.953)	23.9 - 24.2 (0.941 - 0.949): without VTC 24.9 - 25.2 (0.980 - 0.992): with VTC
Valve length "L"	Intake	92.00 - 92.5 (3.6220 - 3.6417)	
	Exhaust	92.37 - 92.87 (3.6366 - 3.6563)	
Valve stem diameter "d"	Intake	5.465 - 5.480 (0.2152 - 0.2157)	
	Exhaust	5.445 - 5.460 (0.2144 - 0.2150)	
Valve face angle "α"		45°15′ - 45°45′	
Valve margin "T" limit		0.9 - 1.1 (0.035 - 0.043)	
Valve stem end surface grinding limit		Less than 0.2 (0.008)	

Valve clearance

Unit: mm (in)

	For adjusting		For checking
	Hot	Cold*	Hot
Intake	0.32 - 0.40 (0.013 - 0.016)	0.25 - 0.33 (0.010 - 0.013)	0.21 - 0.49 (0.008 - 0.019)
Exhaust	0.37 - 0.45 (0.015 - 0.018)	0.32 - 0.40 (0.013 - 0.016)	0.30 - 0.58 (0.012 - 0.023)

*: At a temperature of approximately 20°C (68°F)

Whenever valve clearances are adjusted to cold specifications, check that the clearances satisfy hot specifications and adjust again if necessary.

Simpo PDF Merge and Split Unregistered Version - http://www.simpopdf.com

Inspection and Adjustment (Cont'd)

Available shims

Thickness mm (in)	Identification mark
2.00 (0.0787)	200
2.02 (0.0795)	202
2.04 (0.0803)	204
2.06 (0.0811)	206
2.08 (0.0819)	208
2.10 (0.0827)	210
2.12 (0.0835)	212
2.14 (0.0843)	214
2.16 (0.0850)	216
2.18 (0.0858)	218
2.20 (0.0866)	220
2.22 (0.0874)	222
2.24 (0.0882)	224
2.26 (0.0890)	226
2.28 (0.0898)	228
2.30 (0.0906)	230
2.32 (0.0913)	2.32
2.34 (0.0921)	234
2.36 (0.0929)	236
2.38 (0.0937)	238
2.40 (0.0945)	240
2.42 (0.0953)	242
2.44 (0.0961)	244
2.46 (0.0969)	246
2.48 (0.0976)	248
2.50 (0.0984)	250
2.52 (0.0992)	252
2.54 (0.1000)	254
2.56 (0.1008)	256
2.58 (0.1016)	258
2.60 (0.1024)	260
2.62 (0.1031)	262
2.64 (0.1039)	264
2.66 (0.1047)	266
2.68 (0.1055)	268
2.70 (0.1063)	270
2.72 (0.1071)	272
2.74 (0.1079)	274
2.76 (0.1087)	276
2.78 (0.1094)	278
2.80 (0.1102)	280
2.82 (0.1110)	282
2.84 (0.1118)	284
2.86 (0.1126)	286
2.88 (0.1134)	288
2.90 (0.1142)	290
2.92 (0.1150)	292
2.94 (0.1157)	294
2.96 (0.1165)	296
2.98 (0.1173)	298

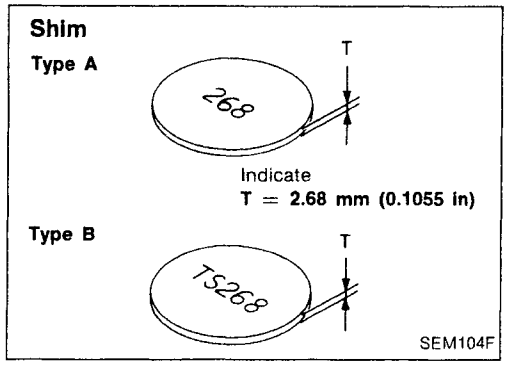

Simpo PDF Merge and Split Unregistered Version - http://www.simpopdf.com

Inspection and Adjustment (Cont'd)

Valve guide

Unit: mm (in)

	Intake		Exhaust	
	Standard	Service	Standard	Service
Valve guide Outer diameter	9.523 - 9.534 (0.3749 - 0.3754)	9.723 - 9.734 (0.3828 - 0.3832)	9.523 - 9.534 (0.3749 - 0.3754)	9.723 - 9.734 (0.3828 - 0.3832)
Valve guide Inner diameter [Finished size]	5.500 - 5.515 (0.2165 - 0.2171)		5.500 - 5.515 (0.2165 - 0.2171)	
Cylinder head valve guide hole diameter	9.475 - 9.496 (0.3730 - 0.3739)	9.685 - 9.696 (0.3813 - 0.3817)	9.475 - 9.496 (0.3730 - 0.3739)	9.685 - 9.696 (0.3813 - 0.3817)
Interference fit of valve guide	0.027 - 0.059 (0.0011 - 0.0023)	0.027 - 0.049 (0.0011 - 0.0019)	0.027 - 0.059 (0.0011 - 0.0023)	0.027 - 0.049 (0.0011 - 0.0019)
Stem to guide clearance	0.020 - 0.050 (0.0008 - 0.0020)		0.040 - 0.070 (0.0016 - 0.0028)	
Valve deflection limit (Dial gauge reading)	0.2 (0.008)		0.2 (0.008)	
Projection length	11.5 - 11.7 (0.453 - 0.461)			

Valve spring

Free height	mm (in)	41.19 (1.6217)
Pressure N (kg, lb) at height mm (in)	Standard	344.42 (35.12, 77.44) at 25.26 (0.9945)
	Limit	323.73 (33.01, 72.79) at 25.26 (0.9945)
Out-of-square	mm (in)	Less than 1.80 (0.0709)

Valve lifter

Unit: mm (in)

Valve lifter outside diameter	29.960 - 29.975 (1.1795 - 1.1801)
Lifter guide inside diameter	30.000 - 30.021 (1.1811 - 1.1819)
Clearance between lifter and lifter guide	0.025 - 0.061 (0.0010 - 0.0024)

Simpo PDF Merge and Split Unregistered Version - http://www.simpopdf.com

Inspection and Adjustment (Cont'd)

Valve seat

Unit: mm (in)

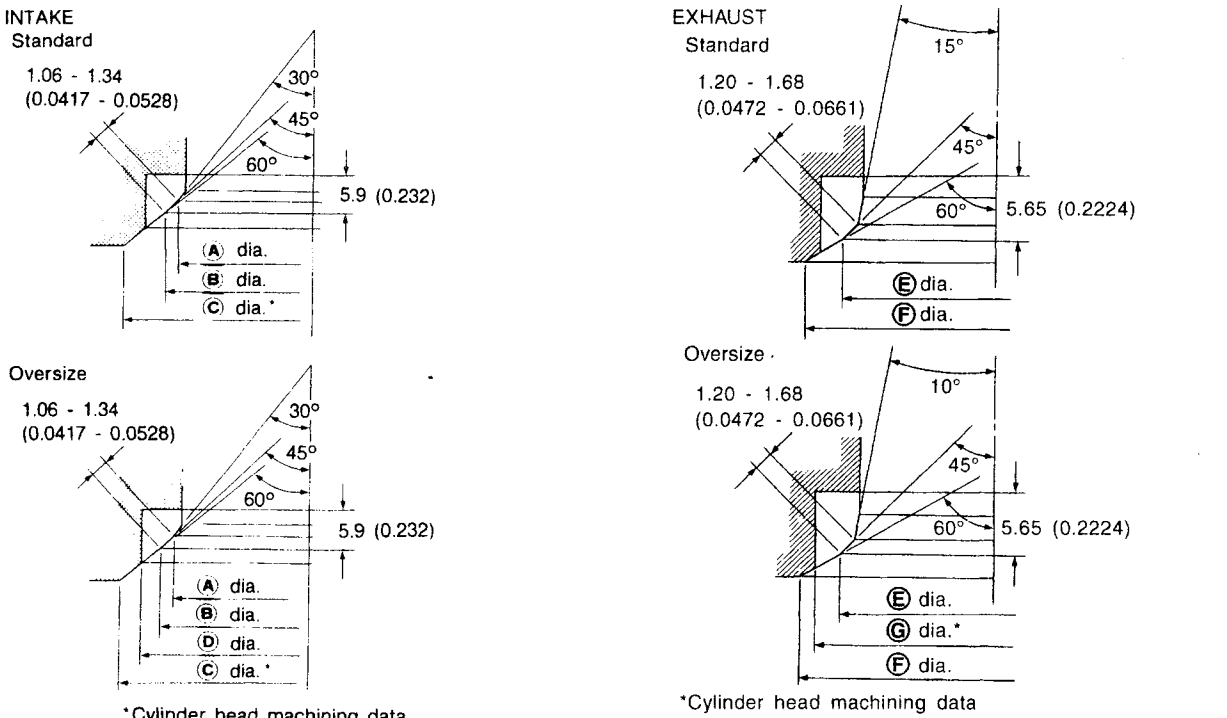

Dia.	GA16DE without VTC	GA14DE and 15DE	GA16DE with VTC
Ⓐ	27.8 - 28.0 (1.094 - 1.102)	26.4 - 26.6 (1.039 - 1.047)	27.8 - 28.0 (1.094 - 1.102)
Ⓑ	29.5 - 29.7 (1.161 - 1.169)	28.5 - 28.7 (1.122 - 1.130)	29.5 - 29.7 (1.161 - 1.169)
Ⓒ	31.9 - 32.1 (1.256 - 1.264)	30.2 - 30.4 (1.189 - 1.197)	31.9 - 32.1 (1.256 - 1.264)
Ⓓ	31.500 - 31.516 (1.2402 - 1.2408)	30.500 - 30.516 (1.2008 - 1.2014)	31.500 - 31.516 (1.2402 - 1.2408)
Ⓔ	23.5 - 23.7 (0.925 - 0.933)	23.5 - 23.7 (0.925 - 0.933)	24.5 - 24.7 (0.965 - 0.972)
Ⓕ	25.200 - 25.4 (0.9921 - 1.0000)	25.200 - 25.4 (0.9921 - 1.0000)	26.2 - 26.4 (1.031 - 1.039)
Ⓖ	25.500 - 25.516 (1.0039 - 1.0046)	25.500 - 25.516 (1.0039 - 1.0046)	26.500 - 26.516 (1.0433 - 1.0439)

Simpo PDF Merge and Split Unregistered Version - http://www.simpopdf.com

Inspection and Adjustment (Cont'd)

CAMSHAFT AND CAMSHAFT BEARING

Camshaft

Unit: mm (in)

Engine model		GA14DE	GA15DE	GA16DE without VTC	GA16DE with VTC except for Europe	GA16DE with VTC for Australia
Cam height "A"	Intake	39.380 - 39.570 (1.5504 - 1.5579)	39.880 - 40.070 (1.5701 - 1.5776)	39.380 - 39.570 (1.5504 - 1.5579)	40.610 - 40.800 (1.5988 - 1.6063)	40.610 - 40.800 (1.5988 - 1.6063)
	Exhaust		40.056 - 40.246 (1.5770 - 1.5845)	39.880 - 40.070 (1.5701 - 1.5776)	40.056 - 40.246 (1.5770 - 1.5845)	39.91 - 40.100 (1.5713 - 1.5787)
Cam wear limit		0.20 (0.0079)				

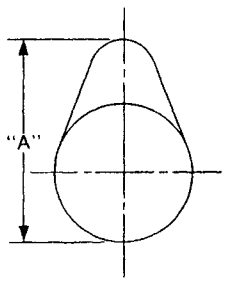

EM671

Camshaft bearing

Unit: mm (in)

		Standard	Limit
Camshaft journal to bearing clearance		0.045 - 0.086 (0.0018 - 0.0034)	0.15 (0.0059)
Inner diameter of camshaft bearing	No. 1	28.000 - 28.021 (1.1024 - 1.1032)	—
	No. 2 to No. 5	24.000 - 24.021 (0.9449 - 0.9457)	
Outer diameter of camshaft journal	No. 1	27.935 - 27.955 (1.0998 - 1.1006)	—
	No. 2 to No. 5	23.935 - 23.955 (0.9423 - 0.9431)	
Camshaft runout [TIR*1]		Less than 0.02 (0.0008)	0.1 (0.004)
Camshaft end play		0.070 - 0.143 (0.0028 - 0.0056)*2 0.115 - 0.188 (0.0045 - 0.0074)*3	0.20 (0.0079)

*1: Total indicator reading
*2: GA16DE without VTC and 14DE
*3: GA16DE with VTC and GA15DE

CYLINDER BLOCK

Unit: mm (in)

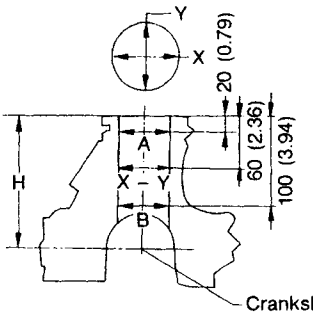

SEM171D

	GA14DE GA15DE	GA16DE	Limit
	Standard		
Surface flatness	Less than 0.03 (0.0012)		0.1 (0.004)
Height "H" (nominal)	213.95 - 214.05 (8.4232 - 8.4271)		—
Standard Inner diameter Grade No. 1	73.600 - 73.610 (2.8976 - 2.8980)	76.000 - 76.010 (2.9921 - 2.9925)	0.2 (0.008)
Grade No. 2	73.610 - 73.620 (2.8980 - 2.8984)	76.010 - 76.020 (2.9925 - 2.9929)	
Grade No. 3	73.620 - 73.630 (2.8984 - 2.8988)	76.020 - 76.030 (2.9929 - 2.9933)	
Out-of-round (X – Y)	Less than 0.015 (0.0006)		—
Taper (A – B)	Less than 0.01 (0.0004)		—
Difference in inner diameter between cylinders	0.05 (0.0020)		0.2 (0.008)

Simpo PDF Merge and Split Unregistered Version - http://www.simpopdf.com

Inspection and Adjustment (Cont'd)

PISTON, PISTON RING AND PISTON PIN

Piston

Unit: mm (in)

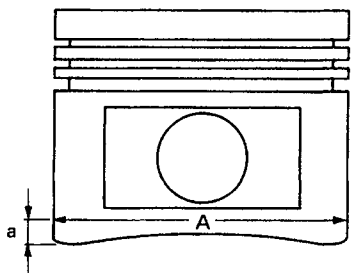

SEM658D

	GA14DE	GA15DE	GA16DE without VTC	GA16DE with VTC
Piston skirt diameter "A" Standard				
Grade No. 1	73.575 - 73.585 (2.8966 - 2.8970)		75.975 - 75.985 (2.9911 - 2.9915)	
Grade No. 2	73.585 - 73.595 (2.8970 - 2.8974)		75.985 - 75.995 (2.9915 - 2.9919)	
Grade No. 3	73.595 - 73.605 (2.8974 - 2.8978)		75.995 - 76.005 (2.9919 - 2.9923)	
0.5 (0.020) oversize (service)	74.075 - 74.105 (2.9163 - 2.9175)		76.475 - 76.505 (3.0108 - 3.0120)	
1.0 (0.039) oversize (service)	74.575 - 74.605 (2.9360 - 2.9372)		76.975 - 77.005 (3.0305 - 3.0317)	
"a" dimension	7.5 (0.295)	7.9 (0.311)	9.5 (0.374)	9.9 (0.390)
Piston pin hole inner diameter	18.987 - 18.999 (0.7475 - 0.7480)			
Piston pin outer diameter	18.989 - 19.001 (0.7476 - 0.7481)			
Piston to bore clearance	0.015 - 0.035 (0.0006 - 0.0014)			

Piston ring

Unit: mm (in)

		Standard	Limit
Side clearance	Top	0.040 - 0.080 (0.0016 - 0.0031)	0.2 (0.008)
	2nd*	0.030 - 0.070 (0.0012 - 0.0028)	
End gap	Top	0.20 - 0.35 (0.0079 - 0.0138)	1.0 (0.039)
	2nd*	0.37 - 0.52 (0.0146 - 0.0205)	
	Oil	0.20 - 0.60 (0.0079 - 0.0236)	

*: Applies to GA16DE without VTC, and 14DE.

Piston pin

Unit: mm (in)

Piston pin outer diameter	18.989 - 19.001 (0.7476 - 0.7481)
Piston pin to piston clearance	–0.004 to 0 (–0.0002 to 0)
Piston pin to connecting rod, bushing clearance	0.005 - 0.017 (0.0002 - 0.0007)

CONNECTING ROD

Unit: mm (in)

Center distance	140.45 - 140.55 (5.5295 - 5.5335)
Bend limit [per 100 (3.94)]	0.15 (0.0059)
Torsion limit [per 100 (3.94)]	0.3 (0.012)
Connecting rod bushing inner diameter* (small end)	19.000 - 19.012 (0.7480 - 0.7485)
Connecting rod big end inner diameter	43.000 - 43.013 (1.6929 - 1.6934)
Side clearance	
Standard	0.200 - 0.470 (0.0079 - 0.0185)
Limit	0.52 (0.0205)

*: After installing in connecting rod

Simpo PDF Merge and Split Unregistered Version - http://www.simpopdf.com

Inspection and Adjustment (Cont'd)

CRANKSHAFT

Unit: mm (in)

	GA14DE	GA15DE GA16DE
Main journal dia. "Dm"		
Grade No. 0	49.956 - 49.964 (1.9668 - 1.9671)	
Grade No. 1	49.948 - 49.956 (1.9665 - 1.9668)	
Grade No. 2	49.940 - 49.948 (1.9661 - 1.9665)	
Pin journal dia. "Dp"		
Grade No. 0	39.968 - 39.974 (1.5735 - 1.5738)	
Grade No. 1	39.962 - 39.968 (1.5733 - 1.5735)	
Grade No. 2	39.956 - 39.962 (1.5731 - 1.5733)	
Center distance "r"	40.85 - 40.95 (1.6083 - 1.6122)	43.95 - 44.05 (1.7303 - 1.7342)
Out-of-round (X – Y)		
Standard	Less than 0.005 (0.0002)	
Taper (A – B)		
Standard	Less than 0.002 (0.0001)	
Runout [TIR*]		
Standard	Less than 0.05 (0.0020)	
Free end play		
Standard	0.060 - 0.180 (0.0024 - 0.0071)	
Limit	0.3 (0.012)	

*: Total indicator reading

MAIN BEARING

Standard

Grade No.	Thickness "T" mm (in)	Identification color
0	1.827 - 1.831 (0.0719 - 0.0721)	Black
1	1.831 - 1.835 (0.0721 - 0.0722)	Brown
2	1.835 - 1.839 (0.0722 - 0.0724)	Green
3	1.839 - 1.843 (0.0724 - 0.0726)	Yellow
4	1.843 - 1.847 (0.0726 - 0.0727)	Blue

Undersize

Unit: mm (in)

	Thickness "T"
0.25 (0.0098)	1.960 - 1.964 (0.0772 - 0.0773)
0.50 (0.0197)	2.085 - 2.089 (0.0821 - 0.0822)

AVAILABLE CONNECTING ROD BEARING

Connecting rod bearing

Unit: mm (in)

	Grade No.	Thickness	Identification color or number
Standard	0	1.503 - 1.506 (0.0592 - 0.0593)	—
	1	1.506 - 1.509 (0.0593 - 0.0594)	Brown
	2	1.509 - 1.512 (0.0594 - 0.0595)	Green
Undersize	0.08 (0.0031)	1.542 - 1.546 (0.0607 - 0.0609)	8
	0.12 (0.0047)	1.562 - 1.566 (0.0615 - 0.0617)	12
	0.25 (0.0098)	1.627 - 1.631 (0.0641 - 0.0642)	25

Bearing clearance

Unit: mm (in)

Main bearing clearance	
Standard	0.018 - 0.042 (0.0007 - 0.0017)
Limit	0.1 (0.004)
Connecting rod bearing clearance	
Standard	0.014 - 0.039 (0.0006 - 0.0015)
Limit All	0.1 (0.004)

MISCELLANEOUS COMPONENTS

Unit: mm (in)

Camshaft sprocket runout limit [TIR*]	0.17 (0.0067)
Flywheel runout [TIR*]	Less than 0.15 (0.0059)
Drive plate runout [TIR*]	Less than 0.2 (0.008)

*: Total indicator reading

Simpo PDF Merge and Split Unregistered Version - http://www.simpopdf.com

General Specifications

Cylinder arrangement		In-line 4
Displacement	cm^3 (cu in)	1,998 (121.92)
Bore and stroke	mm (in)	86 x 86 (3.39 x 3.39)
Valve arrangement		DOHC
Firing order		1-3-4-2
Number of piston rings		
Compression		2
Oil		1
Number of main bearings		5
Compression ratio		9.5

Valve timing

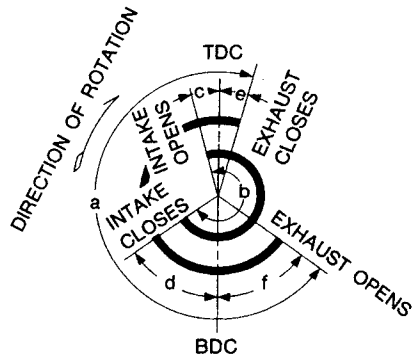

EM120

Unit: degree

a	b	c	d	e	f
240°	248°	13°	55°	3°	57°

Inspection and Adjustment

COMPRESSION PRESSURE

Unit: kPa (kg/cm^2, psi)/300 rpm

Compression pressure	
Standard	1,226 (12.5, 178)
Minimum	1,030 (10.5, 149)
Differential limit between cylinders	98 (1.0, 14)

CYLINDER HEAD

Unit: mm (in)

	Standard	Limit
Head surface distortion	Less than 0.03 (0.0012)	0.1 (0.004)

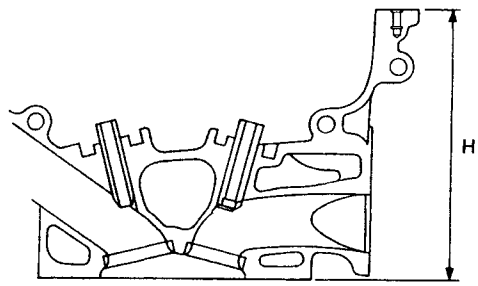

SEM043F

Nominal cylinder head height "H"	136.9 - 137.1 (5.390 - 5.398)
Resurfacing limit	0.2 (0.008)*

*Total amount of cylinder head resurfacing plus cylinder block resurfacing

Simpo PDF Merge and Split Unregistered Version - http://www.simpopdf.com

Inspection and Adjustment (Cont'd)

VALVE

Unit: mm (in)

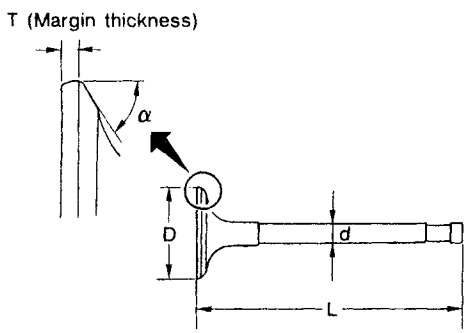

SEM188A

Valve head diameter "D"	
Intake	34.0 - 34.3 (1.339 - 1.350)
Exhaust	30.0 - 30.2 (1.181 - 1.189)
Valve length "L"	
Intake	101.19 - 101.61 (3.9839 - 4.0004)
Exhaust	102.11 - 102.53 (4.0201 - 4.0366)
Valve stem diameter "d"	
Intake	5.965 - 5.980 (0.2348 - 0.2354)
Exhaust	5.945 - 5.960 (0.2341 - 0.2346)
Valve seat angle "α"	
Intake	45°15′ - 45°45′
Exhaust	
Valve margin "T"	
Intake	1.1 (0.043)
Exhaust	1.3 (0.051)
Valve margin "T" limit	More than 0.5 (0.020)
Valve stem end surface grinding limit	Less than 0.2 (0.008)

Valve spring

Free height	mm (in)	49.36 (1.9433)
Pressure N (kg, lb) at height mm (in)		
Standard		578.02 - 641.57 (58.94 - 65.42, 129.96 - 144.25) at 30.0 (1.181)
Limit		549.2 (56.0, 123.5) at 30.0 (1.181)
Out-of-square	mm (in)	Less than 2.2 (0.087)

Hydraulic lash adjuster (HLA)

Unit: mm (in)

HLA outer diameter	16.980 - 16.993 (0.6685 - 0.6690)
HLA guide hole diameter	17.000 - 17.020 (0.6693 - 0.6701)
Clearance between HLA and HLA guide hole	0.007 - 0.040 (0.0003 - 0.0016)

Valve guide

Unit: mm (in)

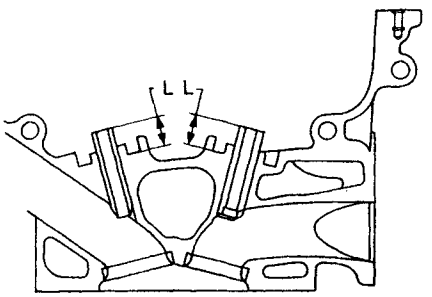

SEM083D

		Standard	Service
Valve guide Outer diameter	Intake	10.023 - 10.034 (0.3946 - 0.3950)	10.223 - 10.234 (0.4025 - 0.4029)
	Exhaust	10.023 - 10.034 (0.3946 - 0.3950)	10.223 - 10.234 (0.4025 - 0.4029)
Valve guide Inner diameter (Finished size)	Intake	6.000 - 6.018 (0.2362 - 0.2369)	
	Exhaust	6.000 - 6.018 (0.2362 - 0.2369)	
Cylinder head valve guide hole diameter	Intake	9.975 - 9.996 (0.3927 - 0.3935)	10.175 - 10.196 (0.4006 - 0.4014)
	Exhaust	9.975 - 9.996 (0.3927 - 0.3935)	10.175 - 10.196 (0.4006 - 0.4014)
Interference fit of valve guide		0.027 - 0.059 (0.0011 - 0.0023)	

		Standard	Limit
Stem to guide clearance	Intake	0.020 - 0.053 (0.0008 - 0.0021)	0.08 (0.0031)
	Exhaust	0.040 - 0.073 (0.0016 - 0.0029)	0.1 (0.004)
Valve deflection limit		0.2 (0.008)	
Projection length "L"		14.0 - 14.2 (0.551 - 0.559)	

Simpo PDF Merge and Split Unregistered Version - http://www.simpopdf.com

Inspection and Adjustment (Cont'd)

Valve seat

Unit: mm (in)

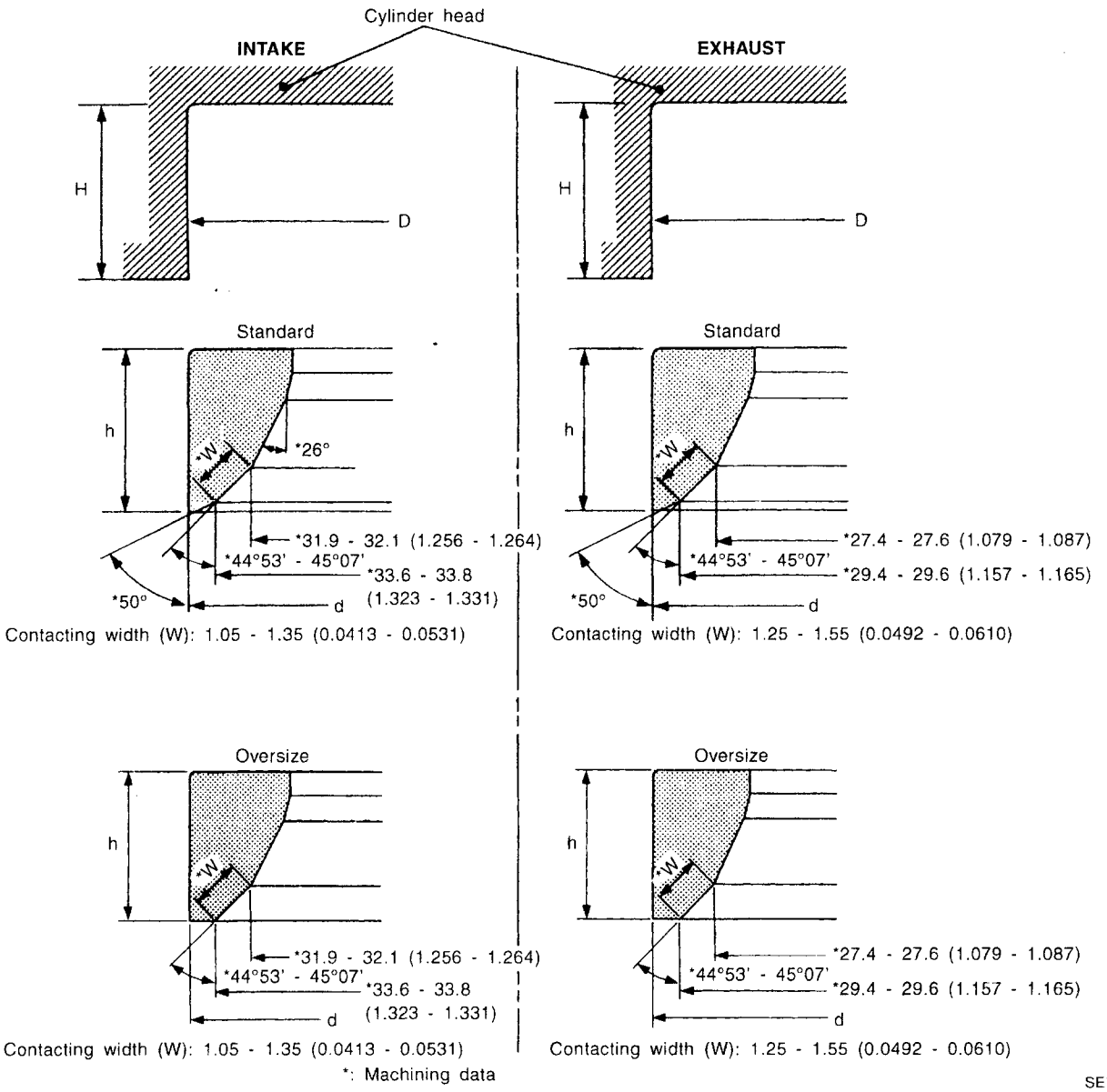

SEM243F

		Standard	Service
Cylinder head seat recess diameter (D)	In.	35.000 - 35.016 (1.3780 - 1.3786)	35.500 - 35.516 (1.3976 - 1.3983)
	Ex.	31.000 - 31.016 (1.2205 - 1.2211)	31.500 - 31.516 (1.2402 - 1.2408)
Valve seat interference fit	In.	0.064 - 0.096 (0.0025 - 0.0038)	
	Ex.	0.064 - 0.096 (0.0025 - 0.0038)	
Valve seat outer diameter (d)	In.	35.080 - 35.096 (1.3811 - 1.3817)	35.580 - 35.596 (1.4008 - 1.4014)
	Ex.	31.080 - 31.096 (1.2236 - 1.2242)	31.580 - 31.596 (1.2433 - 1.2439)
Depth (H)	In.	6.25 (0.2461)	
	Ex.	6.25 (0.2461)	
Height (h)	In.	6.2 - 6.3 (0.244 - 0.248)	5.4 - 5.5 (0.213 - 0.217)
	Ex.	6.2 - 6.3 (0.244 - 0.248)	5.32 - 5.42 (0.2094 - 0.2134)

Simpo PDF Merge and Split Unregistered Version - http://www.simpopdf.com

Inspection and Adjustment (Cont'd)

Valve shim clearance adjustment

Unit: mm (in)

Valve shim clearance (cold) Intake & Exhaust	Less than 0.025 (0.001)
Shim thickness "T"	T_1 ± 0.025 (0.001)

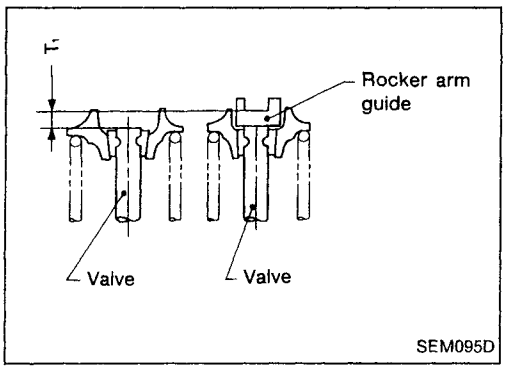

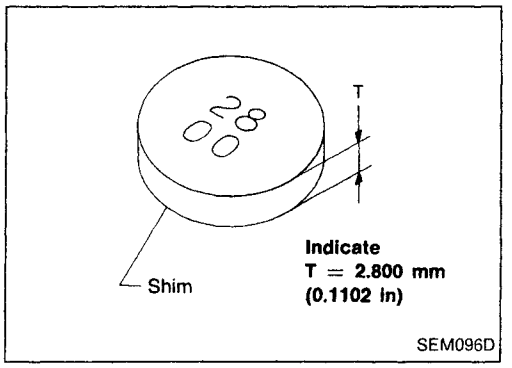

Available shim

Thickness mm (in)	Identification mark
2.800 (0.1102)	28 00
2.825 (0.1112)	28 25
2.850 (0.1122)	28 50
2.875 (0.1132)	28 75
2.900 (0.1142)	29 00
2.925 (0.1152)	29 25
2.950 (0.1161)	29 50
2.975 (0.1171)	29 75
3.000 (0.1181)	30 00
3.025 (0.1191)	30 25
3.050 (0.1201)	30 50
3.075 (0.1211)	30 75
3.100 (0.1220)	31 00
3.125 (0.1230)	31 25
3.150 (0.1240)	31 50
3.175 (0.1250)	31 75
3.200 (0.1260)	32 00

Simpo PDF Merge and Split Unregistered Version - http://www.simpopdf.com

Inspection and Adjustment (Cont'd)

CAMSHAFT AND CAMSHAFT BEARING

Unit: mm (in)

	Standard	Limit
Camshaft journal to bearing clearance	0.045 - 0.086 (0.0018 - 0.0034)	0.15 (0.0059)
Inner diameter of camshaft bearing	28.000 - 28.021 (1.1024 - 1.1032)	—
Outer diameter of camshaft journal	27.935 - 27.955 (1.0998 - 1.1006)	—
Camshaft runout [TIR*]	Less than 0.02 (0.0008)	0.1 (0.004)
Camshaft sprocket runout [TIR*]	Less than 0.25 (0.0098)	—
Camshaft end play	0.055 - 0.139 (0.0022 - 0.0055)	0.20 (0.0079)

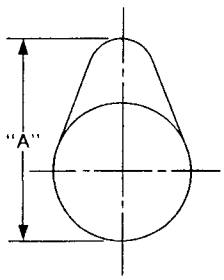

EM671

Cam height "A"	
Intake	38.408 - 38.598 (1.5121 - 1.5196)
Exhaust	37.920 - 38.110 (1.4929 - 1.5004)
Wear limit of cam height	0.2 (0.008)
Valve lift	
Intake	10.0 (0.394)
Exhaust	9.2 (0.362)

*Total indicator reading

CYLINDER BLOCK

Unit: mm (in)

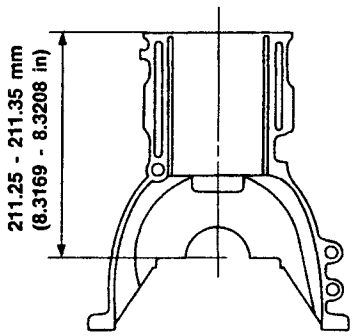

SEM964E

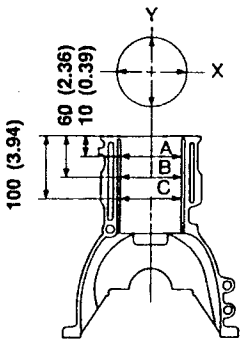

SEM686D

Surface flatness	
Standard	Less than 0.03 (0.0012)
Limit	0.1 (0.004)
Cylinder bore	
Inner diameter	
Standard	
Grade No. 1	86.000 - 86.010 (3.3858 - 3.3862)
Grade No. 2	86.010 - 86.020 (3.3862 - 3.3866)
Grade No. 3	86.020 - 86.030 (3.3866 - 3.3870)
Wear limit	0.20 (0.0079)
Out-of-round (X – Y)	
Standard	Less than 0.015 (0.0006)
Taper (A – B and A – C)	
Standard	Less than 0.010 (0.0004)
Difference in inner diameter between cylinders	
Limit	Less than 0.05 (0.0020)
Main journal inner diameter	
Grade No. 0	58.944 - 58.950 (2.3206 - 2.3209)
Grade No. 1	58.950 - 58.956 (2.3209 - 2.3211)
Grade No. 2	58.956 - 58.962 (2.3211 - 2.3213)
Grade No. 3	58.962 - 58.968 (2.3213 - 2.3216)

EM

Simpo PDF Merge and Split Unregistered Version - http://www.simpopdf.com

Inspection and Adjustment (Cont'd)

PISTON, PISTON RING AND PISTON PIN

Piston

Unit: mm (in)

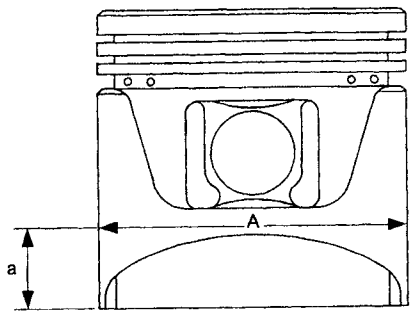

SEM750C

Piston skirt diameter "A"	
Standard	
Grade No. 1	85.980 - 85.990 (3.3850 - 3.3854)
Grade No. 2	85.990 - 86.000 (3.3854 - 3.3858)
Grade No. 3	86.000 - 86.010 (3.3858 - 3.3862)
0.20 (0.0079) oversize (Service)	86.180 - 86.210 (3.3929 - 3.3941)
"a" dimension	14.0 (0.551)
Piston clearance to cylinder block	0.010 - 0.030 (0.0004 - 0.0012)
Piston pin hole diameter	21.987 - 21.999 (0.8656 - 0.8661)

Piston ring

Unit: mm (in)

Side clearance	
Top	
Standard	0.045 - 0.080 (0.0018 - 0.0031)
Limit	0.2 (0.008)
2nd	
Standard	0.030 - 0.065 (0.0012 - 0.0026)
Limit	0.2 (0.008)
Ring gap	
Top	
Standard	0.20 - 0.30 (0.0079 - 0.0118)
Limit	1.0 (0.039)
2nd	
Standard	0.35 - 0.50 (0.0138 - 0.0197)
Limit	1.0 (0.039)
Oil	
Standard	0.20 - 0.60 (0.0079 - 0.0236)
Limit	1.0 (0.039)

Piston pin

Unit: mm (in)

Piston pin outer diameter	21.989 - 22.001 (0.8657 - 0.8662)
Interference fit of piston pin to piston	0 - 0.004 (0 - 0.0002)
Piston pin to connecting rod bushing clearance	
Standard	0.005 - 0.017 (0.0002 - 0.0007)
Limit	0.023 (0.0009)

* Values measured at ambient temperature of 20°C (68°F)

Simpo PDF Merge and Split Unregistered Version - http://www.simpopdf.com

Inspection and Adjustment (Cont'd)

CONNECTING ROD

Unit: mm (in)

Center distance	136.30 (5.3661)
Bend [per 100 (3.94)]	
Limit	0.15 (0.0059)
Torsion [per 100 (3.94)]	
Limit	0.3 (0.012)
Connecting rod small end inner diameter	24.980 - 25.000 (0.9835 - 0.9843)
Piston pin bushing inner diameter*	22.000 - 22.012 (0.8661 - 0.8666)
Connecting rod big end inner diameter	51.000 - 51.013 (2.0079 - 2.0084)
Side clearance	
Standard	0.20 - 0.35 (0.0079 - 0.0138)
Limit	0.5 (0.020)

*After installing in connecting rod

CRANKSHAFT

Unit: mm (in)

Main journal dia. "Dm"	
Grade No. 0	54.974 - 54.980 (2.1643 - 2.1646)
Grade No. 1	54.968 - 54.974 (2.1641 - 2.1643)
Grade No. 2	54.962 - 54.968 (2.1639 - 2.1641)
Grade No. 3	54.956 - 54.962 (2.1636 - 2.1639)
Pin journal dia. "Dp"	
Grade No. 0	47.968 - 47.974 (1.8885 - 1.8887)
Grade No. 1	47.962 - 47.968 (1.8883 - 1.8885)
Grade No. 2	47.956 - 47.962 (1.8880 - 1.8883)
Center distance "r"	42.96 - 43.04 (1.6913 - 1.6945)
Out-of-round (X – Y)	
Standard	Main journal Less than 0.005 (0.0002) Pin journal Less than 0.0025 (0.0001)
Taper (A – B)	
Standard	Main journal Less than 0.005 (0.0002) Pin journal Less than 0.0025 (0.0001)
Runout [TIR]	
Standard	Less than 0.025 (0.0010)
Limit	Less than 0.05 (0.0020)
Free end play	
Standard	0.10 - 0.26 (0.0039 - 0.0102)
Limit	0.30 (0.0118)

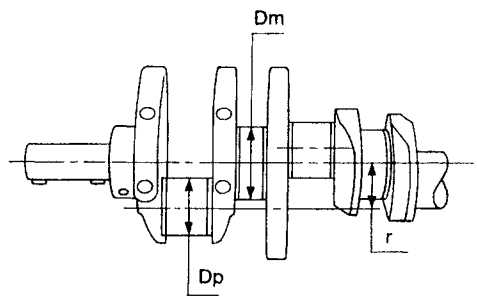

Out-of-round (X) – (Y)
Taper (A) – (B)

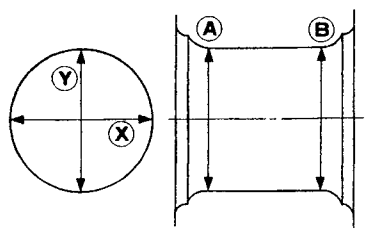

SEM954C

Simpo PDF Merge and Split Unregistered Version - http://www.simpopdf.com

Inspection and Adjustment (Cont'd)

MAIN BEARING

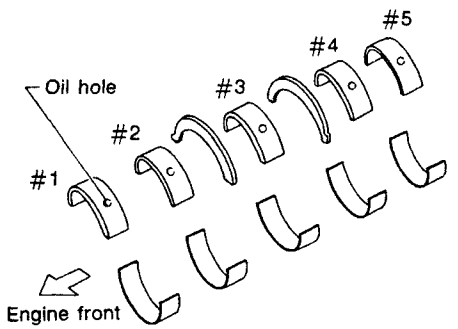

SEM685D

Standard

Unit: mm (in)

Grade number	Thickness "T"	Width "W"	Identification color (mark)
0	1.977 - 1.980 (0.0778 - 0.0780)	18.9 - 19.1 (0.744 - 0.752)	Black (A)
1	1.980 - 1.983 (0.0780 - 0.0781)		Brown (B)
2	1.983 - 1.986 (0.0781 - 0.0782)		Green (C)
3	1.986 - 1.989 (0.0782 - 0.0783)		Yellow (D)
4	1.989 - 1.992 (0.0783 - 0.0784)		Blue (E)
5	1.992 - 1.995 (0.0784 - 0.0785)		Pink (F)
6	1.995 - 1.998 (0.0785 - 0.0787)		No color (G)

Undersize

Unit: mm (in)

Undersize	Thickness "T"	Main journal diameter "Dm"
0.25 (0.0098)	2.109 - 2.117 (0.0830 - 0.0833)	Grind so that bearing clearance is the specified value.

CONNECTING ROD BEARING

Connecting rod bearing

Standard size

Unit: mm (in)

Grade number	Thickness "T"	Width "W"	Identification color (mark)
0	1.500 - 1.503 (0.0591 - 0.0592)	16.9 - 17.1 (0.665 - 0.673)	No color (A)
1	1.503 - 1.506 (0.0592 - 0.0593)		Black (B)
2	1.506 - 1.509 (0.0593 - 0.0594)		Brown (C)

Undersize

Unit: mm (in)

Undersize	Thickness "T"	Crank pin journal diameter "Dp"
0.08 (0.0031)	1.541 - 1.549 (0.0607 - 0.0610)	Grind so that bearing clearance is the specified value.
0.12 (0.0047)	1.561 - 1.569 (0.0615 - 0.0618)	
0.25 (0.0098)	1.626 - 1.634 (0.065 - 0.00256)	

Bearing clearance

Unit: mm (in)

Main bearing clearance	
Standard	0.004 - 0.022 (0.0002 - 0.0009)
Limit	0.05 (0.0020)
Connecting rod bearing clearance	
Standard	0.020 - 0.045 (0.0008 - 0.0018)
Limit	0.065 (0.00256)

MISCELLANEOUS COMPONENTS

Unit: mm (in)

Camshaft sprocket runout limit [TIR]	0.25 (0.0098)
Flywheel runout limit [TIR]	0.15 (0.0059)
Drive plate runout limit [TIR]	0.2 (0.008)

Simpo PDF Merge and Split Unregistered Version - http://www.simopdf.com

Inspection and Adjustment

COMPRESSION PRESSURE

Unit: kPa (bar, kg/cm^2, psi) at 200 rpm

Standard	3,138 (31.4, 32, 455)
Limit	2,452 (24.5, 25, 356)
Difference limit between cylinders	490 (4.9, 5, 71)

CYLINDER HEAD

Unit: mm (in)

Head surface flatness	
Standard	Less than 0.05 (0.0020)
Limit	0.1 (0.004)
Nominal cylinder head height	137.9 - 138.1 (5.429 - 5.437)

CAMSHAFT AND CAMSHAFT BEARING

Unit: mm (in)

	Standard	Max. tolerance
Camshaft journal clearance	0.045 - 0.086 (0.0018 - 0.0034)	0.1 (0.004)
Inner diameter of camshaft bearing	30.000 - 30.021 (1.1811 - 1.1819)	—
Outer diameter of camshaft journal	29.935 - 29.955 (1.1785 - 1.1793)	—
Camshaft runout	Less than 0.02 (0.0008)	0.05 (0.0020)
Camshaft end play	0.115 - 0.188 (0.0045 - 0.0074)	—

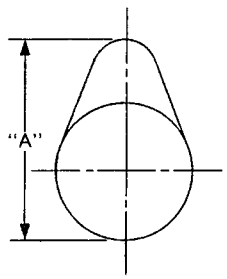

EM671

Cam height "A"	
Intake	49.20 - 49.25 (1.9370 - 1.9390)
Exhaust	49.15 - 49.20 (1.9350 - 1.9370)

VALVE

Unit: mm (in)

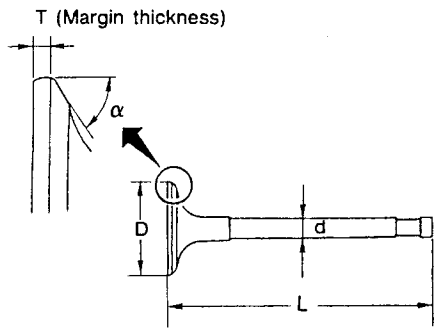

SEM188

Valve head diameter "D"	
Intake	39.0 - 39.3 (1.535 - 1.547)
Exhaust	32.0 - 32.2 (1.260 - 1.268)
Valve length "L"	
Intake	100.53 - 100.97 (3.9579 - 3.9752)
Exhaust	100.38 - 100.82 (3.9520 - 3.9693)
Valve stem diameter "d"	
Intake	6.965 - 6.980 (0.2742 - 0.2748)
Exhaust	6.945 - 6.960 (0.2734 - 0.2740)
Valve seat angle "α"	45°30'
Valve margin "T" limit	0.5 (0.020)
Valve stem end surface grinding limit	0.5 (0.020)

EM

Simpo PDF Merge and Split Unregistered Version - http://www.simpopdf.com

Inspection and Adjustment (Cont'd)

Valve spring

Free height mm (in)	
Outer	43.2 (1.701)
Inner	38.2 (1.504)
	Standard
Assembled height mm/N (mm/kg, in/lb)	
Outer	36.1/164.8 (36.1/16.8, 1.421/37.0)
Inner	32.6/78.5 (32.6/8.0, 1.283/17.6)
Out-of-square "S" mm (in)	
Outer	2.1 (0.083)
Inner	1.9 (0.075)

Valve guide

Unit: mm (in)

	Standard	Service
Valve guide		
Outer diameter	11.023 - 11.034 (0.4340 - 0.4344)	11.223 - 11.234 (0.4418 - 0.4423)
Valve guide		
Inner diameter (Finished size)	7.000 - 7.015 (0.2756 - 0.2762)	
Cylinder head valve guide hole diameter	10.985 - 10.996 (0.4325 - 0.4329)	11.185 - 11.196 (0.4404 - 0.4408)
Interference fit of valve guide	0.027 - 0.049 (0.0011 - 0.0019)	
	Standard	Max. tolerance
Stem to guide clearance		
Intake	0.020 - 0.050 (0.0008 - 0.0020)	0.10 (0.0039)
Exhaust	0.040 - 0.070 (0.0016 - 0.0028)	0.10 (0.0039)
Valve deflection limit		0.1 (0.004)

Valve seat resurfacing

Unit: mm (in)

Intake

Standard (Original)

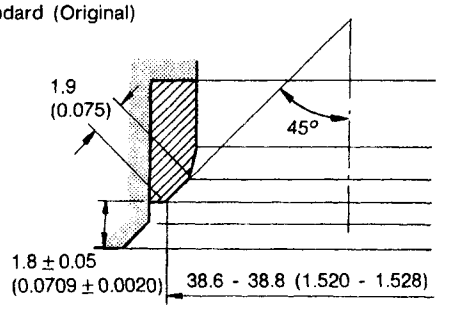

0.5 (0.020) Oversize

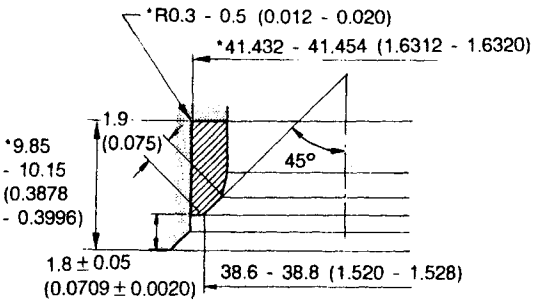

*: Cylinder head machining data

SEM917-B

Exhaust

Standard (Original)

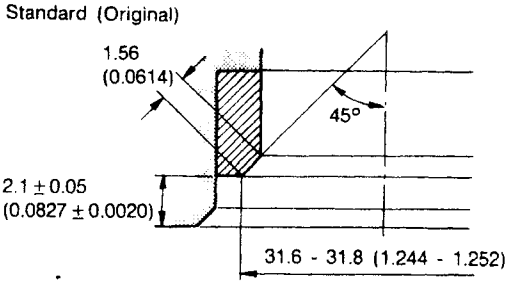

0.5 (0.020) Oversize

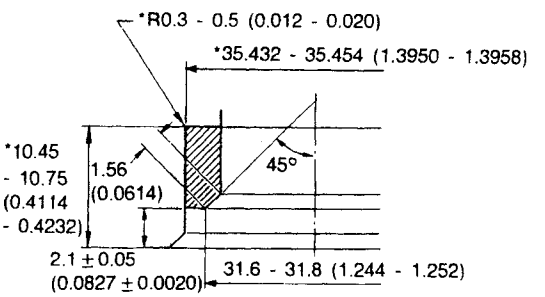

*: Cylinder head machining data

SEM113FA

Simpo PDF Merge and Split Unregistered Version - http://www.simpopdf.com

Inspection and Adjustment (Cont'd)

VALVE LIFTER

Unit: mm (in)

Valve lifter outer diameter	
Standard	34.959 - 34.975 (1.3763 - 1.3770)
Cylinder head valve lifter hole diameter	34.998 - 35.018 (1.3779 - 1.3787)
Clearance	
Standard	0.023 - 0.059 (0.0009 - 0.0023)
Limit	0.1 (0.004)

CYLINDER BLOCK

Unit: mm (in)

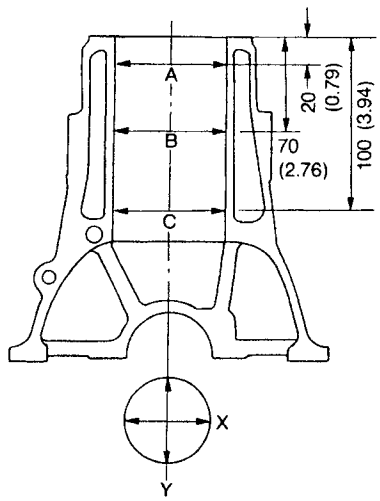

SEM902-A

		Standard	Limit
Surface flatness		Less than 0.05 (0.0020)	0.10 (0.0039)
Cylinder bore	Inner diameter	Grade No. 1 84.500 - 84.510 (3.3268 - 3.3272) Grade No. 2 84.510 - 84.520 (3.3272 - 3.3276) Grade No. 3 84.520 - 84.530 (3.3276 - 3.3279) Grade No. 4 84.530 - 84.540 (3.3279 - 3.3283) Grade No. 5 84.540 - 84.550 (3.3283 - 3.3287)	0.2 (0.008)
	Out-of-round (X – Y)	Less than 0.015 (0.0006)	0.04 (0.0016)
	Taper (A – B)	Less than 0.010 (0.0004)	0.04 (0.0016)
Piston to cylinder clearance		0.025 - 0.045 (0.0010 - 0.0018)	—
Main journal inner diameter		Grade No. 0 56.654 - 56.663 (2.2305 - 2.2308) Grade No. 1 56.663 - 56.672 (2.2308 - 2.2312) Grade No. 2 56.672 - 56.680 (2.2312 - 2.2315)	—

Simpo PDF Merge and Split Unregistered Version - http://www.simpopdf.com

Inspection and Adjustment (Cont'd)

PISTON, PISTON RING AND PISTON PIN

Piston

Unit: mm (in)

Piston skirt diameter	Standard	Grade No. 1	84.465 - 84.475 (3.3254 - 3.3258)
		Grade No. 2	84.475 - 84.485 (3.3258 - 3.3262)
		Grade No. 3	84.485 - 84.495 (3.3262 - 3.3266)
		Grade No. 4	84.495 - 84.505 (3.3266 - 3.3270)
		Grade No. 5	84.505 - 84.515 (3.3270 - 3.3274)
	Oversize	0.25 (0.0098)	84.715 - 84.765 (3.3352 - 3.3372)
		0.5 (0.020)	84.965 - 85.015 (3.3451 - 3.3470)
Measure position (From Top)			62 (2.44)
Piston pin hole diameter			24.991 - 24.999 (0.9839 - 0.9842)

Piston ring

Unit: mm (in)

Side clearance		
Top		
Standard		0.060 - 0.095 (0.0024 - 0.0037)
Limit		0.10 (0.0039)
2nd		
Standard		0.040 - 0.075 (0.0016 - 0.0030)
Limit		0.10 (0.0039)
Oil		
Standard		0.030 - 0.070 (0.0012 - 0.0028)
End gap		
Top		
Standard		
Bore grade 1, 2, 3		0.20 - 0.30 (0.0079 - 0.0118)
Bore grade 4, 5		0.12 - 0.22 (0.0047 - 0.0087)
Limit		1.0 (0.039)
2nd		
Standard		0.38 - 0.53 (0.0150 - 0.0209)
Limit		0.7 (0.028)
Oil		
Standard		0.30 - 0.55 (0.0118 - 0.0217)
Limit		0.6 (0.024)

Piston pin

Unit: mm (in)

Piston pin outer diameter	24.994 - 25.000 (0.9840 - 0.9843)
Interference fit of piston pin to piston	−0.004 to 0 (−0.0002 to 0)
Piston pin to connecting rod clearance	0.025 - 0.044 (0.0010 - 0.0017)

CONNECTING ROD

Unit: mm (in)

Bend [per 100 mm (3.94 in)]	
Standard	Less than 0.025 (0.0010)
Torsion	
Standard	Less than 0.025 (0.0010)
Piston pin bore dia.	25.025 - 25.038 (0.9852 - 0.9857)
Big end play	
Limit	0.3 (0.012)

CRANKSHAFT

Unit: mm (in)

Main journal dia.	Grade No. 0 52.967 - 52.975 (2.0853 - 2.0856) Grade No. 1 52.959 - 52.967 (2.0850 - 2.0853) Grade No. 2 52.951 - 52.959 (2.0847 - 2.0850)
Pin journal dia.	Grade No. 0 49.968 - 49.974 (1.9672 - 1.9675) Grade No.1 49.961 - 49.968 (1.9670 - 1.9672) Grade No. 2 49.954 - 49.961 (1.9667 - 1.9670)
Out-of-round (X − Y) and taper (A − B)	
Standard	Less than 0.005 (0.0002)
Runout	
Standard	Less than 0.05 (0.0020)
Free end play	
Standard	0.05 - 0.18 (0.0020 - 0.0071)
Limit	0.3 (0.012)

Simpo PDF Merge and Split Unregistered Version - http://www.simpopdf.com

Inspection and Adjustment (Cont'd)

AVAILABLE MAIN BEARINGS

No. 1, No. 2, No. 4 and No. 5 main bearings

Grade number	Thickness "T" mm (in)	Width "W" mm (in)	Identification color
0	1.816 - 1.820 (0.0715 - 0.0717)		Yellow
1	1.820 - 1.824 (0.0717 - 0.0718)		Green
2	1.824 - 1.828 (0.0718 - 0.0720)	20.0 (0.787) 17.8 (0.701)*	Brown
3	1.828 - 1.832 (0.0720 - 0.0721)		Black
4	1.832 - 1.836 (0.0721 - 0.0723)		Blue

*: Contacting width

No. 3 main bearings

Grade number	Thickness "T" mm (in)	Width "W" mm (in)	Identification color
0	1.816 - 1.820 (0.0715 - 0.0717)		Yellow
1	1.820 - 1.824 (0.0717 - 0.0718)		Green
2	1.824 - 1.828 (0.0718 - 0.0720)	27.95 (1.1004) 20.8 (0.819)*	Brown
3	1.828 - 1.832 (0.0720 - 0.0721)		Black
4	1.832 - 1.836 (0.0721 - 0.0723)		Blue

*: Contacting width

Main bearing undersize

Unit: mm (in)

	Crank journal diameter
STD	52.951 - 52.975 (2.0847 - 2.0856)
0.25 (0.0098) undersize	52.701 - 52.725 (2.0748 - 2.0758)

Bearing clearance

Unit: mm (in)

Main bearing clearance	
Standard	0.039 - 0.065 (0.0015 - 0.0026)
Connecting rod bearing clearance	
Standard	0.031 - 0.055 (0.0012 - 0.0022)

Connecting rod bearing undersize

Unit: mm (in)

			Crank pin diameter
STD	Grade 0	Black	49.968 - 49.974 (1.9672 - 1.9675)
	Grade 1	Yellow	49.961 - 49.968 (1.9670 - 1.9672)
	Grade 2	Blue	49.954 - 49.961 (1.9667 - 1.9670)
0.08 (0.0031) undersize			49.874 - 49.894* (1.9635 - 1.9643)
0.12 (0.0047) undersize			49.834 - 49.854* (1.9620 - 1.9628)
0.25 (0.0098) undersize			49.704 - 49.724* (1.9568 - 1.9576)

*: Reference value

MISCELLANEOUS COMPONENTS

Unit: mm (in)

Flywheel	
Runout [TIR*]	Less than 0.15 (0.0059)

*: Total indicator reading

Simpo PDF Merge and Split Unregistered Version - http://www.simpopdf.com

FRONT AXLE & FRONT SUSPENSION

SECTION FA

CONTENTS

PRECAUTIONS AND PREPARATION 2
- Precautions 2
- Special Service Tools 2
- Commercial Service Tools 3

FRONT SUSPENSION SYSTEM 4

ON-VEHICLE SERVICE 5
- Front Axle and Front Suspension Parts 5
- Front Wheel Bearing 5
- Front Wheel Alignment 6
- Drive Shaft 7

FRONT AXLE 8
- Wheel Hub and Knuckle 8
- Drive Shaft 12

FRONT SUSPENSION 24
- Coil Spring and Strut Assembly 25
- Stabilizer Bar 26
- Transverse Link and Lower Ball Joint 27

SERVICE DATA AND SPECIFICATIONS (SDS) 29
- General Specifications 29
- Inspection and Adjustment 29

Simpo PDF Merge and Split Unregistered Version - http://www.simpopdf.com

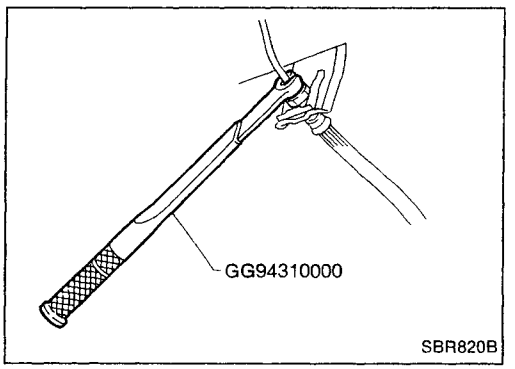

Precautions

- **When installing rubber parts, final tightening must be carried out under unladen condition* with tires on ground.**
  ***: Fuel, radiator coolant and engine oil full. Spare tire, jack, hand tools and mats in designated positions.**
- **After installing removed suspension parts, check wheel alignment and adjust if necessary.**
- **Use flare nut wrench when removing or installing brake tubes.**
- **Always torque brake lines when installing.**

Special Service Tools

Tool number Tool name	Description	
HT72520000 Ball joint remover	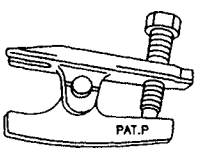 NT146	Removing tie-rod outer end and lower ball joint
HT71780000 Spring compressor	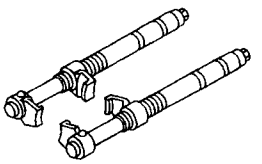 NT144	Removing and installing coil spring
ST35652000 Strut attachment	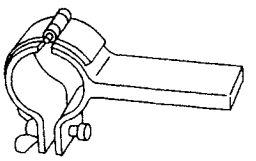 NT145	Fixing strut assembly
GG94310000 Flare nut torque wrench	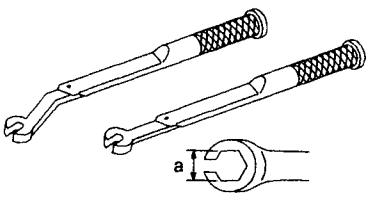 NT406	Removing and installing brake piping **a: 10 mm (0.39 in)**
KV38106700 KV38106800 Differential side oil seal protector	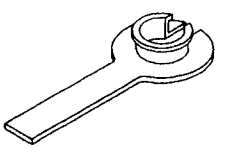 NT147	Installing drive shaft LH: KV38106700 RH: KV38106800

Simpo PDF Merge and Split Unregistered Version - http://www.simpopdf.com

Commercial Service Tools

Tool name	Description	
Front wheel hub drift	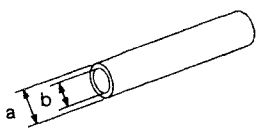 NT065	Removing wheel hub **a: 42 mm (1.65 in) dia.** **b: 33 mm (1.30 in) dia.**
Front wheel bearing outer race drift	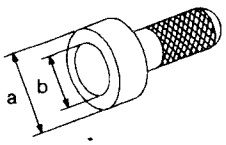 NT115	Removing and installing wheel bearing outer race **a: 76 mm (2.99 in) dia.** **b: 72 mm (2.83 in) dia.**
Grease seal drift	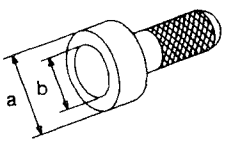 NT115	Installing outer grease seal **a: 81 mm (3.19 in) dia.** **b: 76 mm (2.99 in) dia.**
Attachment Wheel alignment	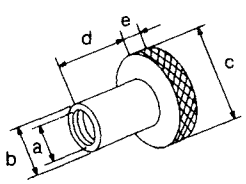 NT148	Measuring wheel alignment **a: Screw M22 x 1.5** **b: 35 (1.38) dia.** **c: 65 (2.56) dia.** **d: 56 (2.20)** **e: 12 (0.47)** Unit: mm (in)
Equivalent to GG94310000 ① Flare nut crows foot ② Torque wrench	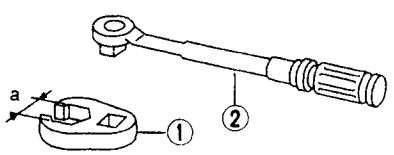 NT360	Removing and installing brake piping **a: 10 mm (0.39 in)**

FA

Simpo PDF Merge and Split Unregistered Version - http://www.simpopdf.com

SEC. 391•400•401

When installing rubber parts, final tightening must be carried out under unladen condition* with tires on ground.
*** Fuel, radiator coolant and engine oil full. Spare tire, jack, hand tools and mats in designated positions.**

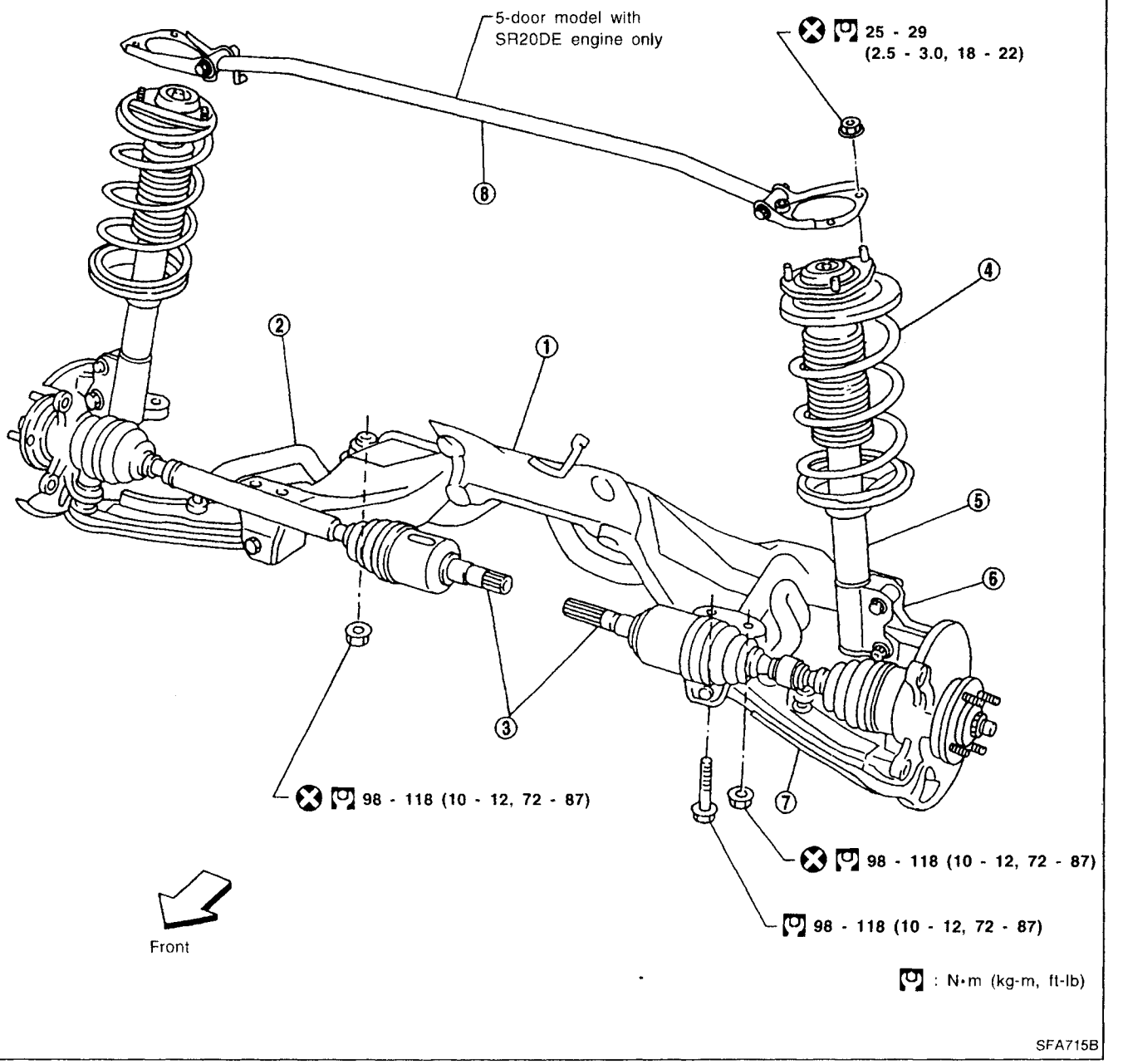

① Suspension member
② Stabilizer bar
③ Drive shaft
④ Coil spring
⑤ Strut assembly
⑥ Knuckle
⑦ Transverse link
⑧ Front strut tower bar

Simpo PDF Merge and Split Unregistered Version - http://www.simpopdf.com

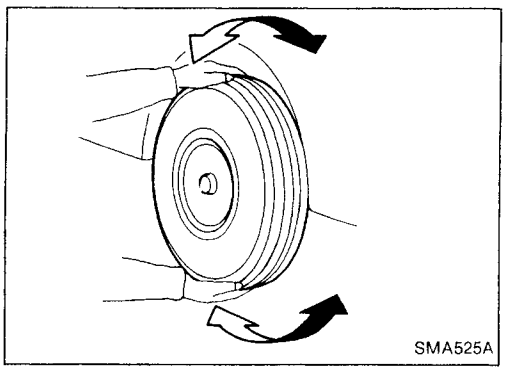
SMA525A

Front Axle and Front Suspension Parts

Check front axle and front suspension parts for excessive play, cracks, wear or other damage.

- Shake each front wheel to check for excessive play.
- Make sure that cotter pins are inserted.
- Retighten all axle and suspension nuts and bolts to the specified torque.

Tightening torque:
Refer to FRONT SUSPENSION (FA-24).

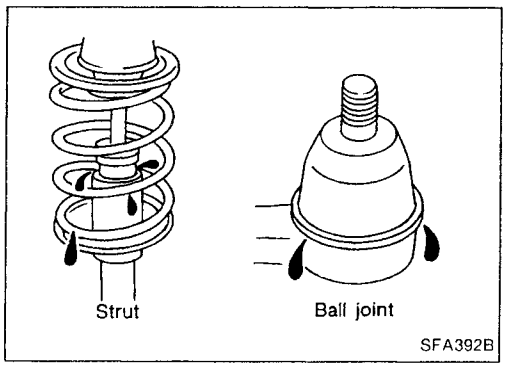

SFA392B

- Check strut (shock absorber) for oil leakage or other damage.
- Check suspension ball joint for grease leakage and ball joint dust cover for cracks or other damage.
  If ball joint dust cover is cracked or damaged, replace transverse link.

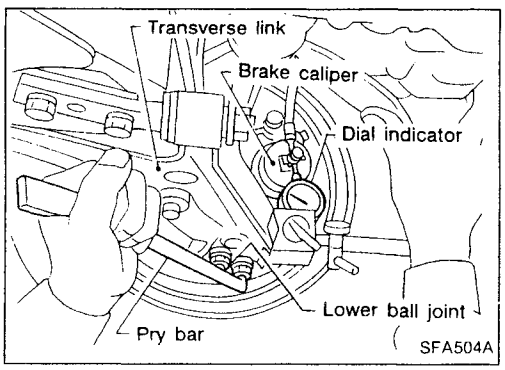

SFA504A

- Check suspension ball joint end play.

a. Jack up front of vehicle and set the stands.
b. Clamp dial indicator onto transverse link and place indicator tip on lower edge of brake caliper.
c. Make sure front wheels are straight and brake pedal is depressed.
d. Place a pry bar between transverse link and inner rim of road wheel.
e. While raising and releasing pry bar, observe maximum dial indicator value. **Vertical end play: 0 mm (0 in)**
f. If ball joint vertical end play exists, remove transverse link and recheck the ball joint. Refer to FA-27.

FA

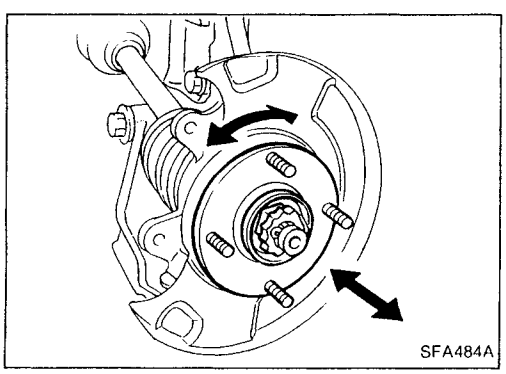
SFA484A

Front Wheel Bearing

- Check that wheel bearings operate smoothly.
- Check axial end play.
  Axial end play: 0.05 mm (0.0020 in) or less
- If out of specification or wheel bearing does not turn smoothly, replace wheel bearing assembly.
  Refer to FRONT AXLE — Wheel Hub and Knuckle (FA-8).

Simpo PDF Merge and Split Unregistered Version - http://www.simpopdf.com

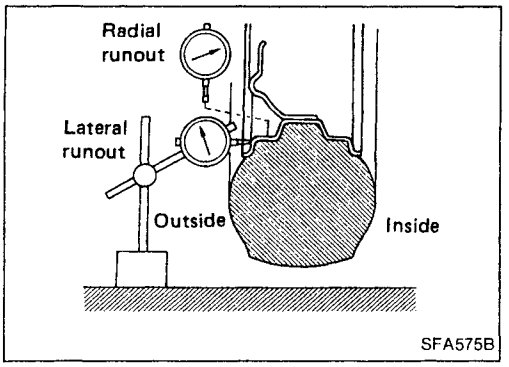

Front Wheel Alignment

Before checking front wheel alignment, be sure to make a preliminary inspection (Unladen*).

*: Fuel, radiator coolant and engine oil full. Spare tire, jack, hand tools and mats in designated positions.

PRELIMINARY INSPECTION

1. Check tires for wear and improper inflation.
2. Check wheel runout.
   Wheel runout:
   Refer to SDS (FA-30).
3. Check front wheel bearings for looseness.
4. Check front suspension for looseness.
5. Check steering linkage for looseness.
6. Check that struts work properly.
7. Check vehicle posture (Unladen).

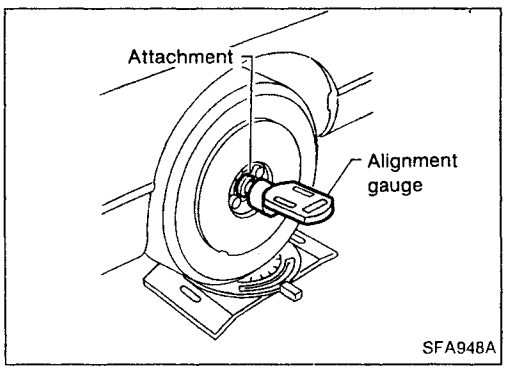

CAMBER, CASTER AND KINGPIN INCLINATION

Camber, caster and kingpin inclination are preset at factory and cannot be adjusted.

1. Measure camber, caster and kingpin inclination of both right and left wheels with a suitable alignment gauge.
   Camber, Caster and Kingpin inclination:
   Refer to SDS (FA-29).
2. If camber, caster or kingpin inclination is not within specification, inspect front suspension parts. Replace damaged or worn out parts.

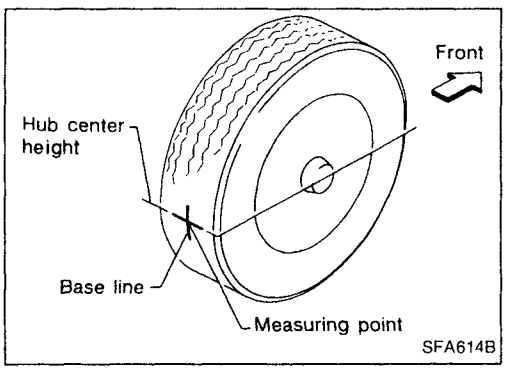

TOE-IN

Measure toe-in using following procedure.

WARNING:

- **Perform following procedure always on a flat surface.**
- **Make sure that no person is in front of the vehicle before pushing it.**

1. Bounce front of vehicle up and down to stabilize the posture.
2. Push the vehicle straight ahead about 5 m (16 ft).
3. Put a mark on base line of tread (rear side) of both tires at the same height as hub center. These are measuring points.
4. Measure distance "A" (rear side).
5. Push the vehicle slowly ahead to rotate the wheels 180 degrees (1/2 turn).

If the wheels have rotated more than 180 degrees (1/2 turn), try the above procedure again from the beginning. Never push vehicle backward.

6. Measure distance "B" (front side).
   Total toe-in
   Refer to SDS (FA-29).

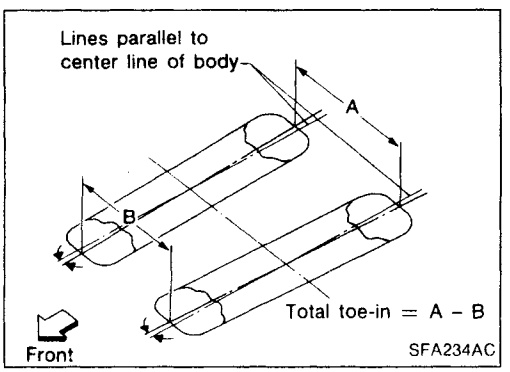

Simpo PDF Merge and Split Unregistered Version - http://www.simpopdf.com

Front Wheel Alignment (Cont'd)

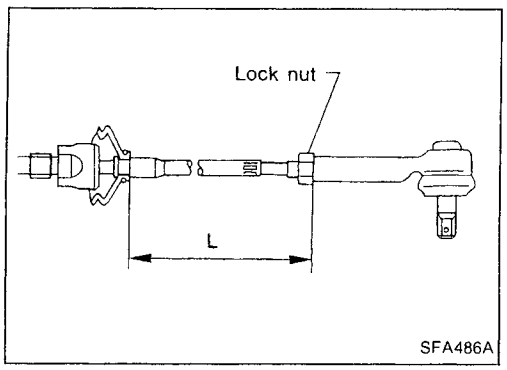

7. Adjust toe-in by varying the length of steering tie-rods.
a. Loosen lock nuts.
b. Adjust toe-in by screwing tie-rods in and out.
Standard length "L":
Refer to ST section.
c. Tighten lock nuts to specified torque.
Lock nut tightening torque:
Refer to ST section.

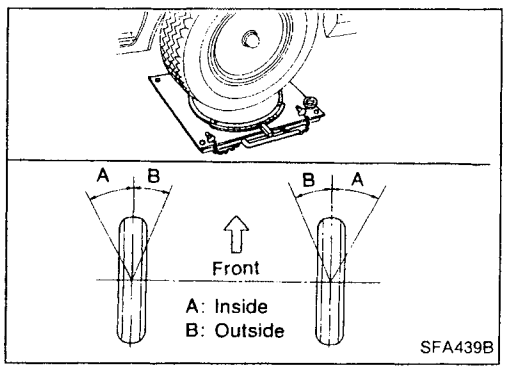

FRONT WHEEL TURNING ANGLE

1. Set wheels in straight-ahead position. Then move vehicle forward until front wheels rest on turning radius gauge properly.
2. Rotate steering wheel all the way right and left; measure turning angle.

Do not hold the steering wheel on full lock for more than 15 seconds.

Wheel turning angle (Full turn):
Refer to SDS (FA-29).

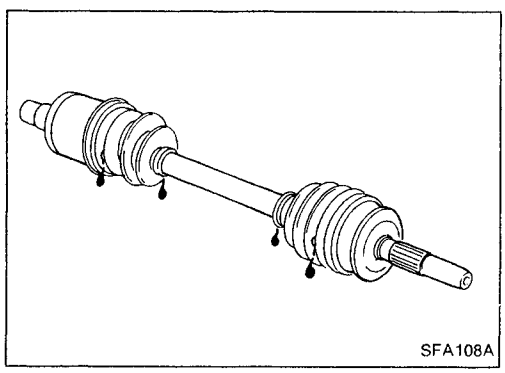

Drive Shaft

- Check for grease leakage or other damage.

FA

Simpo PDF Merge and Split Unregistered Version - http://www.simpopdf.com

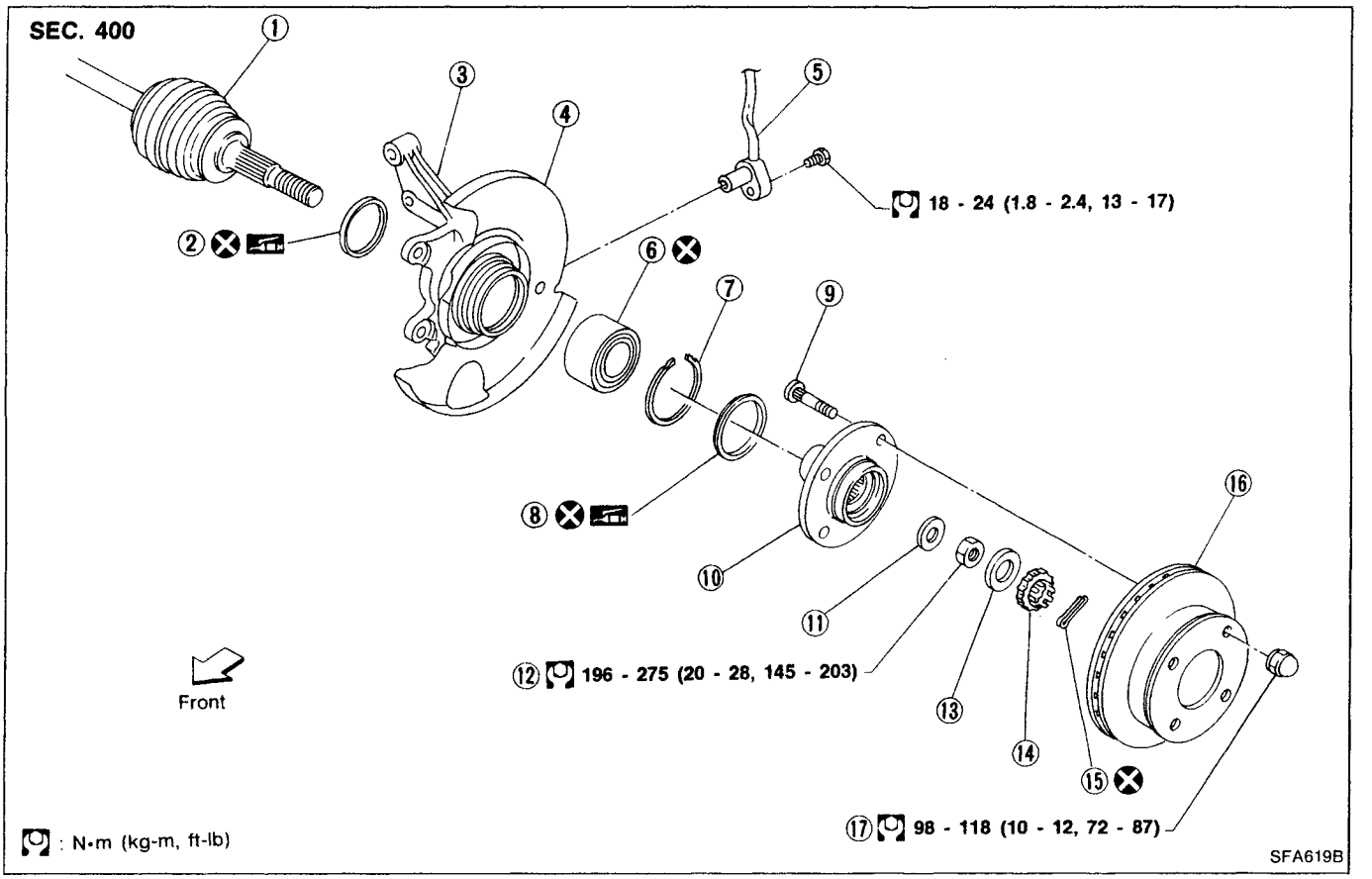

① Drive shaft
② Inner grease seal
③ Knuckle
④ Baffle plate
⑤ ABS sensor
⑥ Wheel bearing assembly
⑦ Snap ring
⑧ Outer grease seal
⑨ Hub bolt
⑩ Wheel hub
⑪ Plain washer
⑫ Wheel bearing lock nut
⑬ Insulator
⑭ Adjusting cap
⑮ Cotter pin
⑯ Disc rotor
⑰ Wheel nut

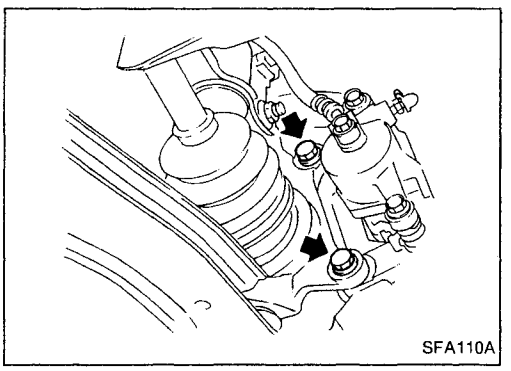

Wheel Hub and Knuckle

REMOVAL

CAUTION:

Before removing the front axle assembly, disconnect the ABS wheel sensor from the assembly. Then move it away from the front axle assembly area. Failure to do so may result in damage to the sensor wires and the sensor becoming inoperative.

1. Remove wheel bearing lock nut.
2. Remove brake caliper assembly and rotor.

Brake hose need not be disconnected from brake caliper.
In this case, suspend caliper assembly with wire so as not to stretch brake hose.
Be careful not to depress brake pedal, or piston will pop out.
Make sure brake hose is not twisted.

Simpo PDF Merge and Split Unregistered Version - http://www.simpopdf.com

Wheel Hub and Knuckle (Cont'd)

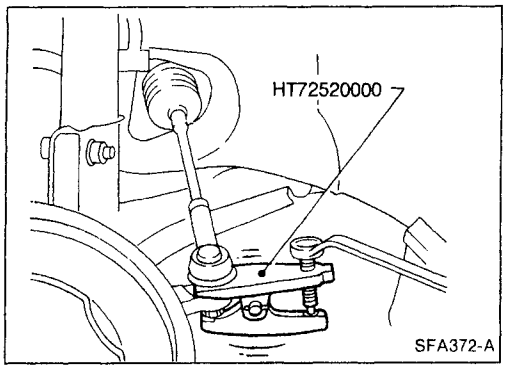

3. Separate tie-rod from knuckle with Tool.

Install stud nut on stud bolt to prevent damage to stud bolt.

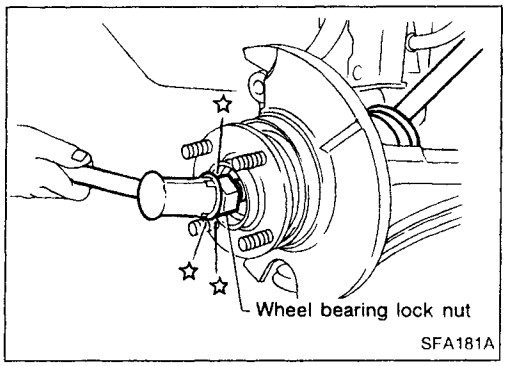

4. Separate drive shaft from knuckle by lightly tapping it. If it is hard to remove, use a puller.

Cover boots with shop towel so as not to damage them when removing drive shaft.

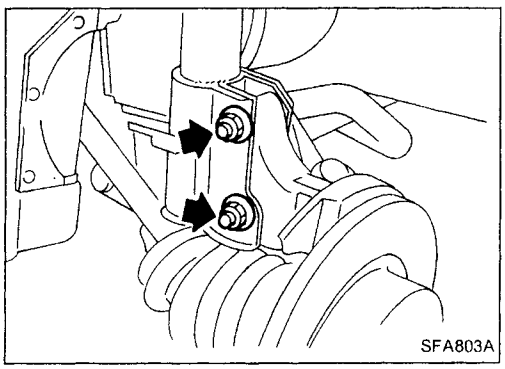

5. Remove strut lower mounting bolts.

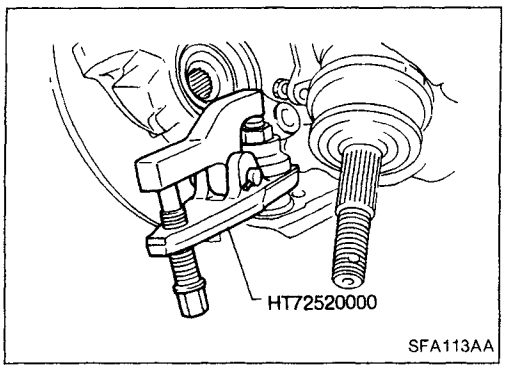

6. Loosen lower ball joint tightening nut.
7. Separate knuckle from lower ball joint stud with Tool.
8. Remove knuckle from transverse link.

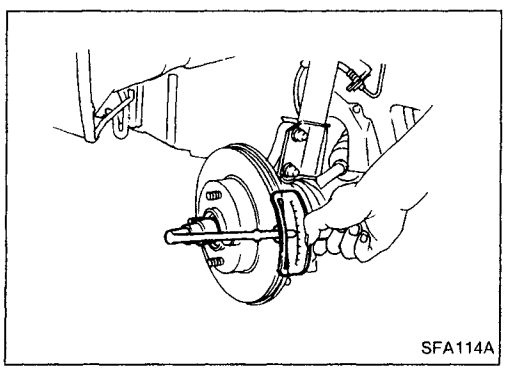

INSTALLATION

1. Install knuckle with wheel hub.
- Replace strut lower mounting nuts.

When installing knuckle to strut, be sure to hold bolts and tighten nuts.

: 114 - 133 N·m (11.6 - 13.6 kg-m, 84 - 98 ft-lb)

Before tightening, apply oil to threaded portion of drive shaft and both sides of plain washer.

2. Tighten wheel bearing lock nut.

: 196 - 275 N·m (20 - 28 kg-m, 145 - 203 ft-lb)

FA

Simpo PDF Merge and Split Unregistered Version - http://www.simpopdf.com

Wheel Hub and Knuckle (Cont'd)

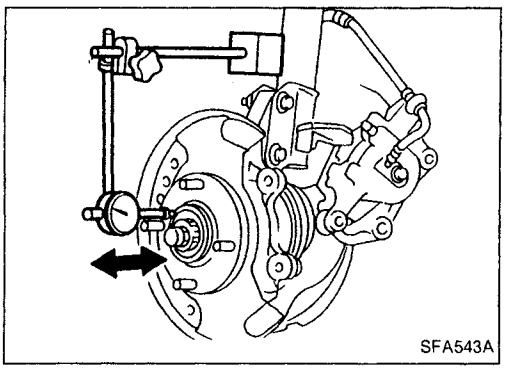
SFA543A

3. Check wheel bearing axial end play.
   Axial end play:
   0.05 mm (0.0020 in) or less

DISASSEMBLY

CAUTION:
When removing wheel hub or wheel bearing from knuckle, replace wheel bearing assembly (outer race, inner races and grease seals) with a new one.

Wheel hub

Drive out hub with inner race (outside) from knuckle with a suitable tool.

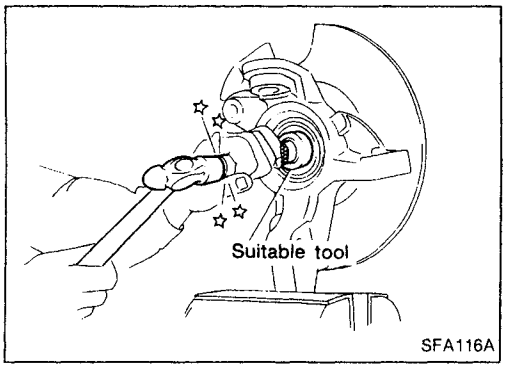

SFA116A

Wheel bearing

When replacing wheel bearing, replace wheel bearing assembly (inner races and outer race).

1. Remove bearing inner race (outside), then remove outer grease seal.

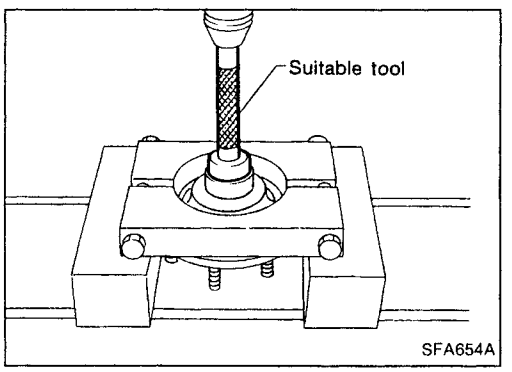

SFA654A

2. Remove inner grease seal from knuckle.

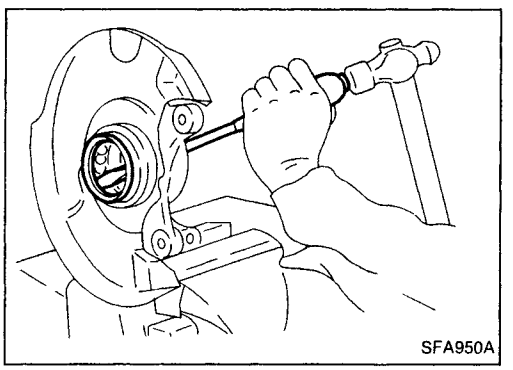
SFA950A

3. Remove snap ring.

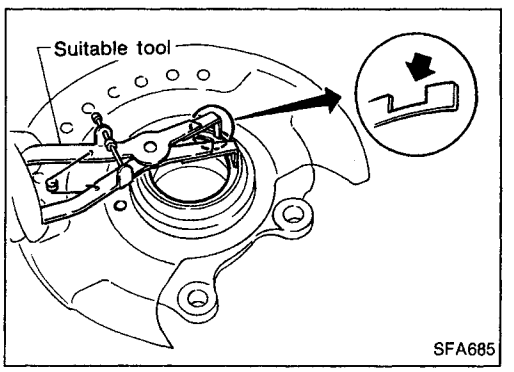

SFA685

Simpo PDF Merge and Split Unregistered Version - http://www.simpopdf.com

Wheel Hub and Knuckle (Cont'd)

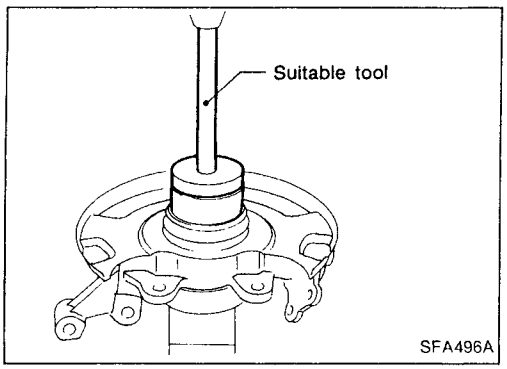

4. Press out bearing outer race.

INSPECTION

Wheel hub and knuckle

Check wheel hub and knuckle for cracks by using a magnetic exploration or dyeing test.

Snap ring

Check snap ring for wear or cracks. Replace if necessary.

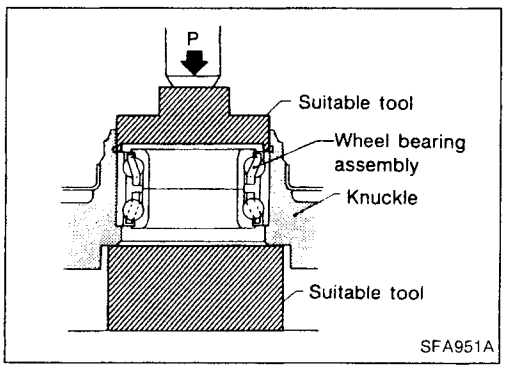

ASSEMBLY

1. Press new wheel bearing assembly into knuckle.
   Maximum load P:
   29 kN (3 ton, 3.3 US ton, 3.0 Imp ton)

CAUTION:

- **Do not press inner race of wheel bearing assembly.**
- **Do not apply oil or grease to mating surfaces of wheel bearing outer race and knuckle.**

2. Install snap ring into groove of knuckle.

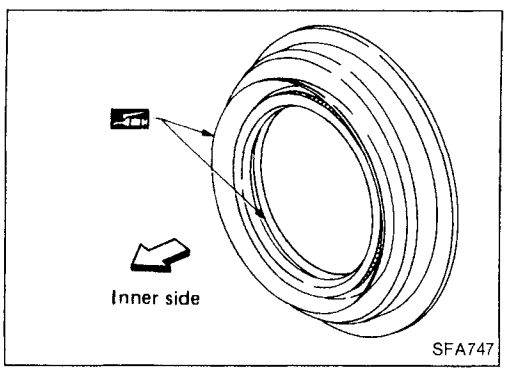

3. Pack grease seal lip with multi-purpose grease.

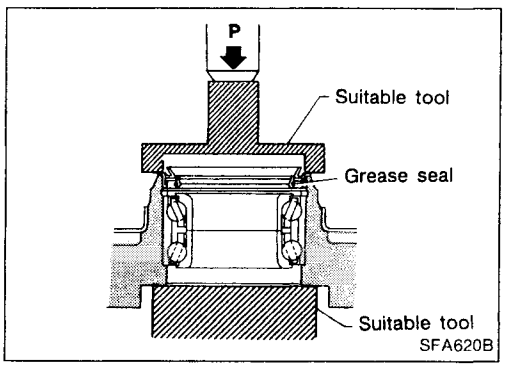

4. Install outer grease seal.
   Maximum load P:
   10 kN (1 ton, 1.1 US ton, 1.0 Imp ton)

FA

Simpo PDF Merge and Split Unregistered Version - http://www.simpopdf.com

Wheel Hub and Knuckle (Cont'd)

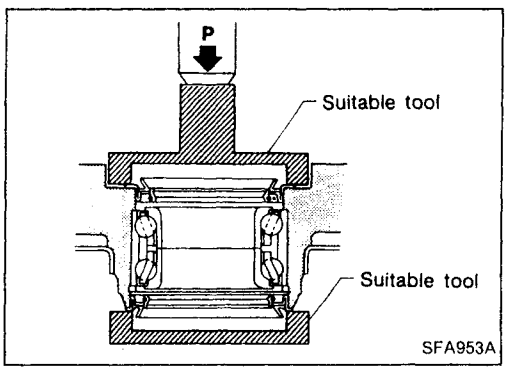

5. Install inner grease seal.
   Maximum load P:
   10 kN (1 ton, 1.1 US ton, 1.0 Imp ton)

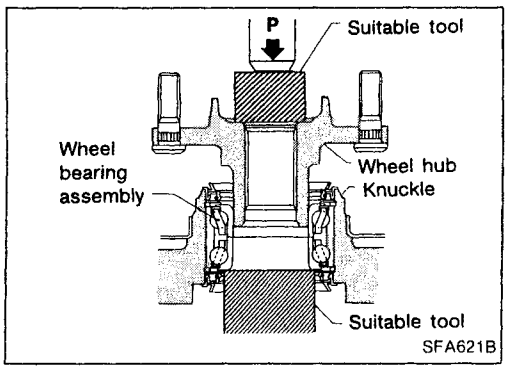

6. Press wheel hub into knuckle.
   Maximum load P:
   29 kN (3 ton, 3.3 US ton, 3.0 Imp ton)

Be careful not to damage grease seal.

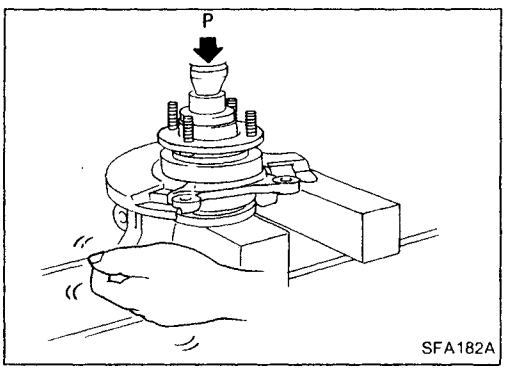

7. Check bearing operation.
a. Add load P with press.
   Load P:
   34.3 - 49.0 kN (3.5 - 5.0 ton, 3.9 - 5.5 US ton, 3.44 - 4.92 Imp ton)
b. Spin knuckle several turns in both directions.
c. Make sure that wheel bearings operate smoothly.

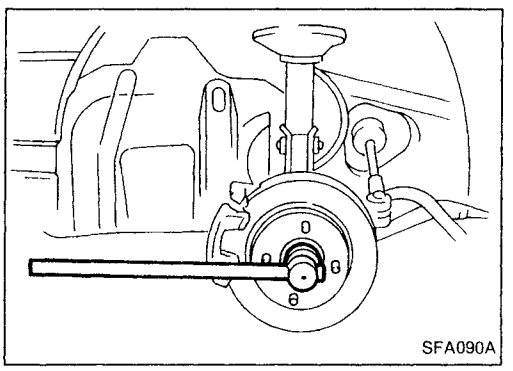

Drive Shaft

REMOVAL

1. Remove wheel bearing lock nut.

Brake caliper need not be disconnected.

Do not twist or stretch brake hose when moving components.

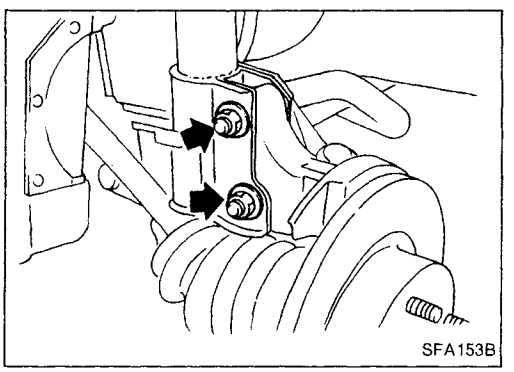

2. Remove strut lower mounting bolts.
3. Remove brake hose clip.

Simpo PDF Merge and Split Unregistered Version - http://www.simpopdf.com

Drive Shaft (Cont'd)

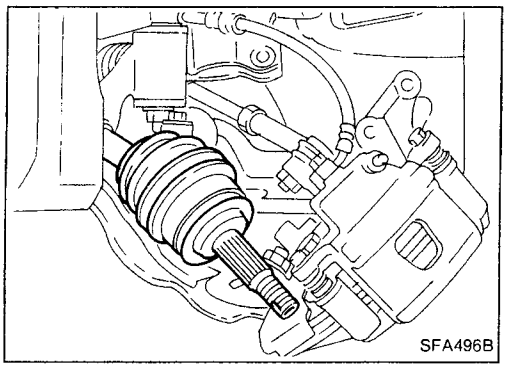
SFA496B

4. Separate drive shaft from knuckle by slightly tapping it.
   If it is hard to remove, use a puller.

When removing drive shaft, cover boots with shop towel to prevent damage to them.

Refer to FRONT AXLE — Wheel Hub and Knuckle (FA-8).

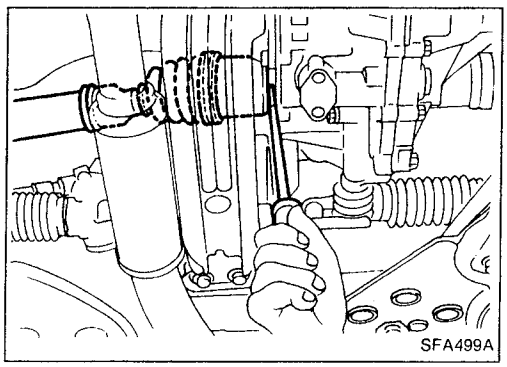
SFA499A

5. Remove right drive shaft from transaxle.

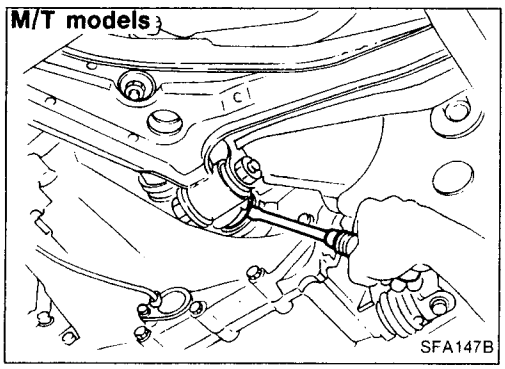

SFA147B

6. Remove left drive shaft from transaxle.

—For M/T models—

- Pry off drive shaft from transaxle as shown at left.

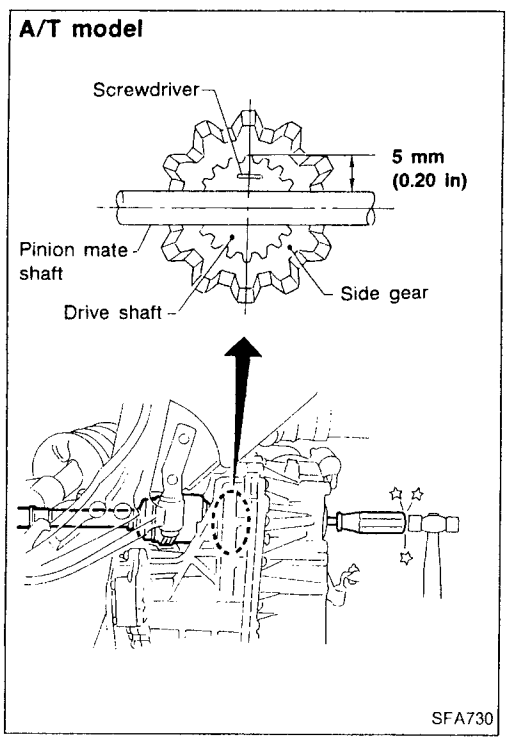

SFA730

—For A/T models—

- Insert screwdriver into transaxle opening for right drive shaft and strike with a hammer.

Be careful not to damage pinion mate shaft and side gear.

FA

Simpo PDF Merge and Split Unregistered Version - http://www.simpopdf.com

Drive Shaft (Cont'd)

INSTALLATION

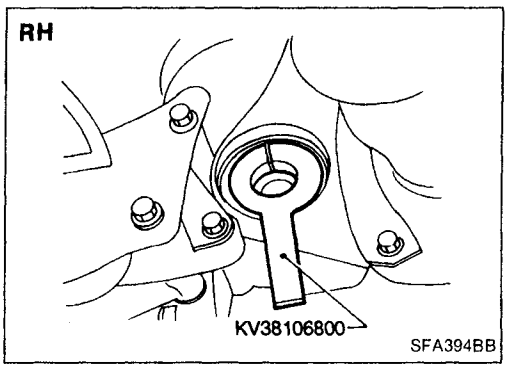

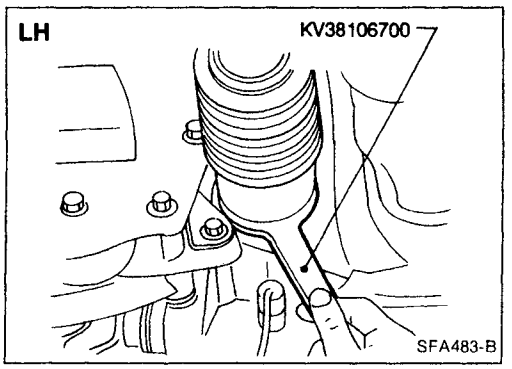

Transaxle side

1. Drive a new oil seal to transaxle. Refer to MT or AT section.
2. Set Tool along the inner circumference of oil seal.
3. Insert drive shaft into transaxle. Be sure to properly align the serrations and then withdraw Tool.
4. Push drive shaft, then press-fit circular clip on the drive shaft into circular clip groove of side gear.
5. After its insertion, try to pull the flange out of the slide joint by hand. If it pulls out, the circular clip is not properly meshed with the side gear.

Wheel side

- Install drive shaft into knuckle.
- Tighten wheel bearing lock nut.
  Refer to FRONT AXLE — Wheel Hub and Knuckle (FA-8).

Simpo PDF Merge and Split Unregistered Version - http://www.simpopdf.com

Drive Shaft (Cont'd)

COMPONENTS

GA and CD engine model

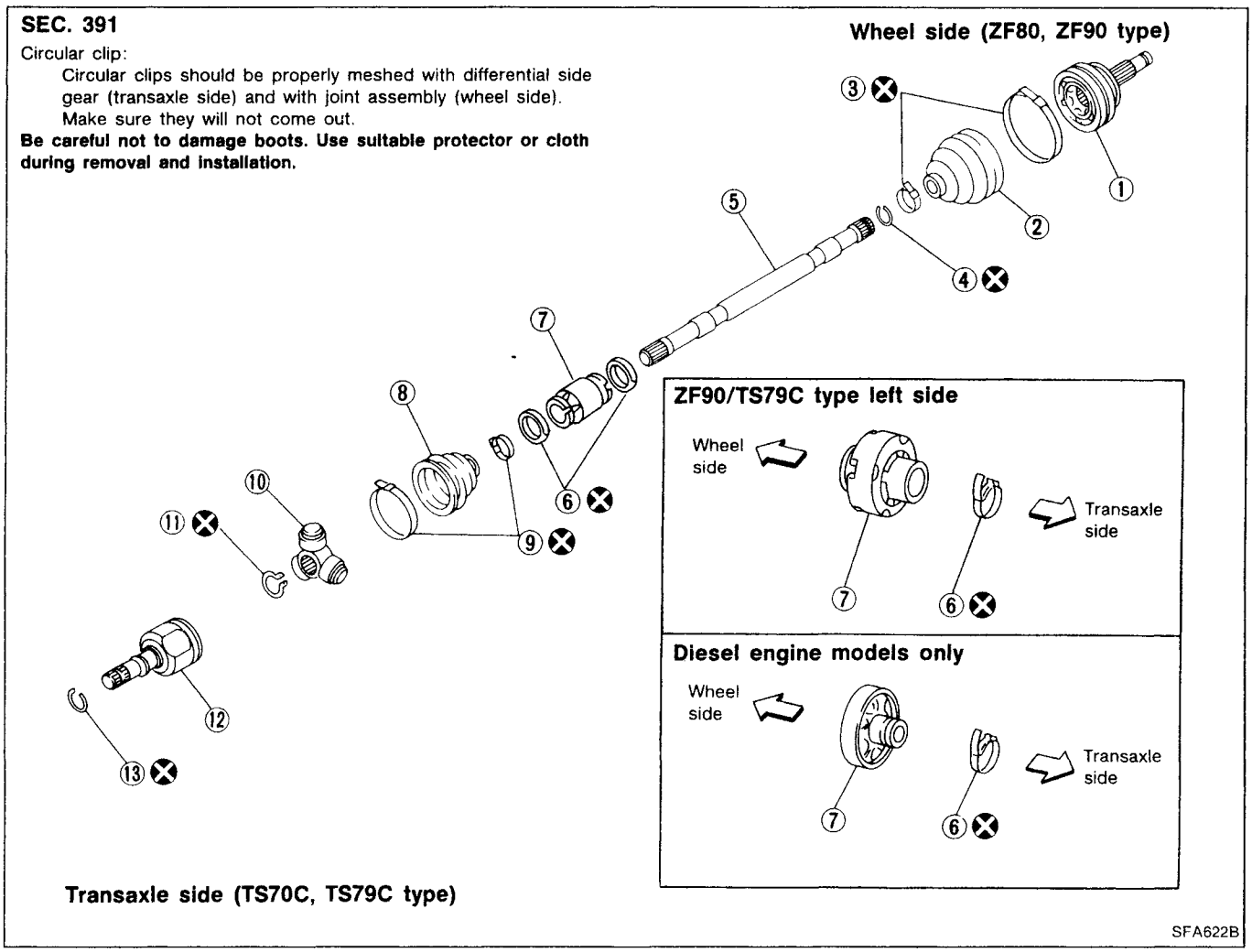

① Joint assembly
② Boot
③ Boot band
④ Circular clip
⑤ Drive shaft
⑥ Dynamic damper band
⑦ Dynamic damper
⑧ Boot
⑨ Boot band
⑩ Spider assembly
⑪ Snap ring
⑫ Slide joint housing
⑬ Circular clip

FA

Simpo PDF Merge and Split Unregistered Version - http://www.simpopdf.com

Drive Shaft (Cont'd)

SR20DE engine model

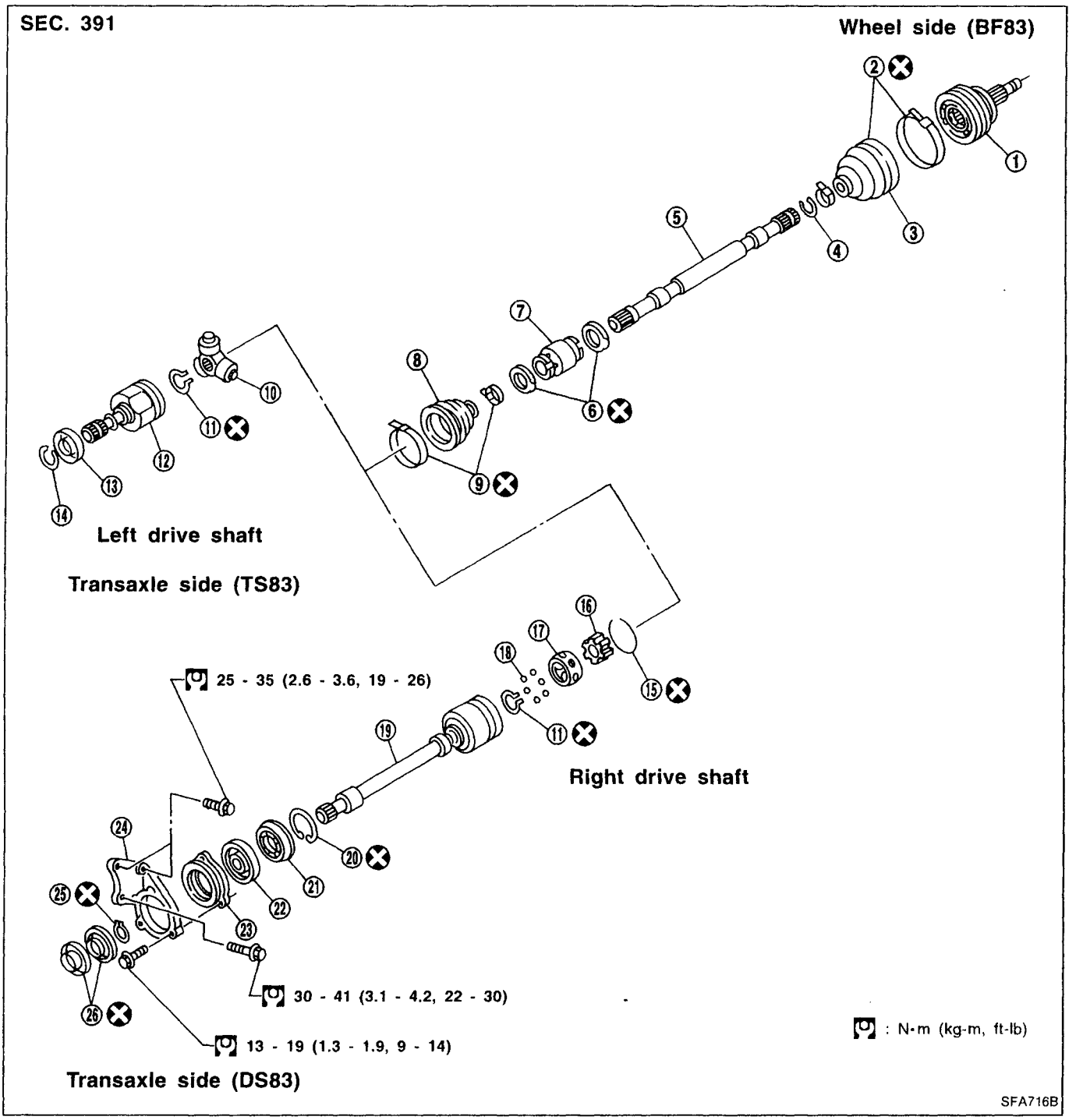

① Joint assembly
② Boot band
③ Boot
④ Circular clip B
⑤ Drive shaft
⑥ Band
⑦ Dynamic damper
⑧ Boot
⑨ Boot band
⑩ Spider assembly
⑪ Snap ring C
⑫ Slide joint housing
⑬ Dust shield
⑭ Circular clip A
⑮ Snap ring A
⑯ Inner race
⑰ Cage
⑱ Ball
⑲ Slide joint housing with extension shaft
⑳ Snap ring E
㉑ Dust shield
㉒ Support bearing
㉓ Support bearing retainer
㉔ Bracket
㉕ Snap ring D
㉖ Dust shield

Simpo PDF Merge and Split Unregistered Version - http://www.simpopdf.com

Drive Shaft (Cont'd)

DISASSEMBLY

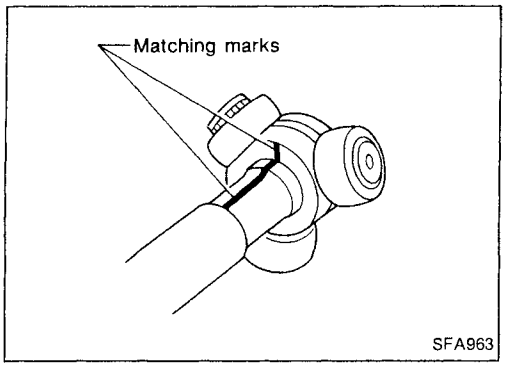

Transaxle side (TS70C, TS79C, TS83 type)

1. Remove boot bands.
2. Put matching marks on slide joint housing and drive shaft before separating joint assembly.
3. Put matching marks on spider assembly and drive shaft.

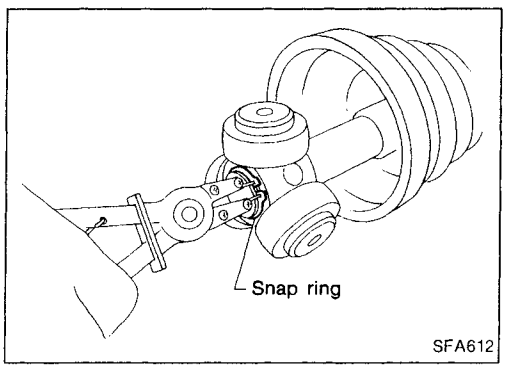

4. Pry off snap ring, then remove spider assembly.

CAUTION:
Do not disassemble spider assembly.

5. Draw out boot.

Cover drive shaft serration with tape to prevent damage to the boot.

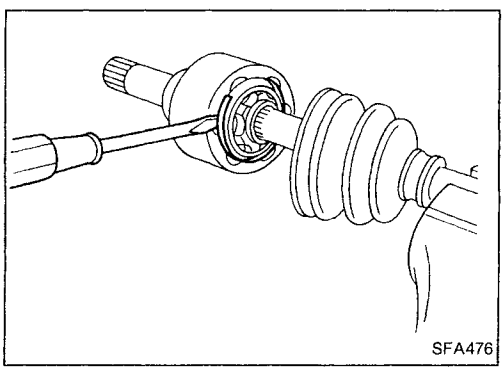

Transaxle side (DS83 type)

1. Remove boot bands.
2. Put matching marks on slide joint housing and inner race, before separating joint assembly.
3. Pry off snap ring "A" with a screwdriver, and pull out slide joint housing.

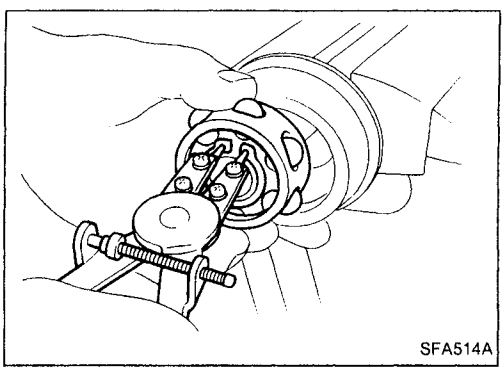

4. Put matching marks on inner race and drive shaft.
5. Remove snap ring "C", then remove ball cage, inner race and balls as a unit.
6. Draw out boot.

Cover drive shaft serrations with tape so as not to damage the boot.

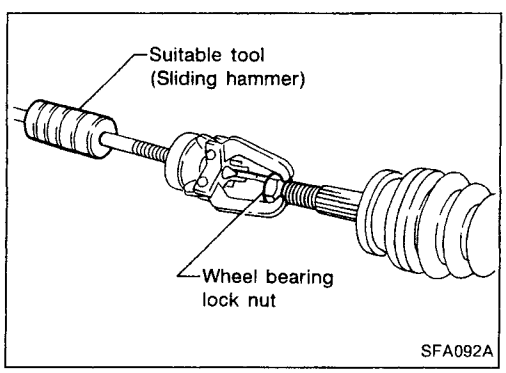

Wheel side

CAUTION:
The joint on the wheel side cannot be disassembled.

1. Before separating joint assembly, put matchmarks on drive shaft and joint assembly.
2. Separate joint assembly with a suitable tool.

Be careful not to damage threads on drive shaft.

3. Remove boot bands.

FA

Simpo PDF Merge and Split Unregistered Version - http://www.simpopdf.com

Drive Shaft (Cont'd)

Support bearing

1. Remove dust shield.

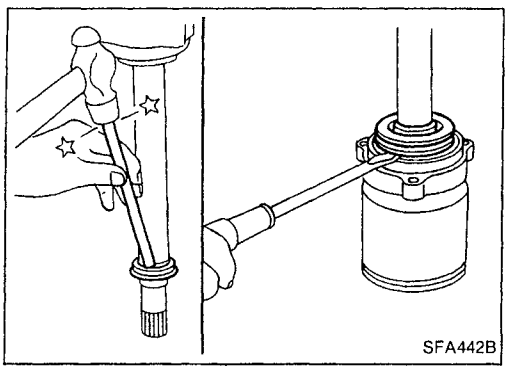

2. Remove snap ring.

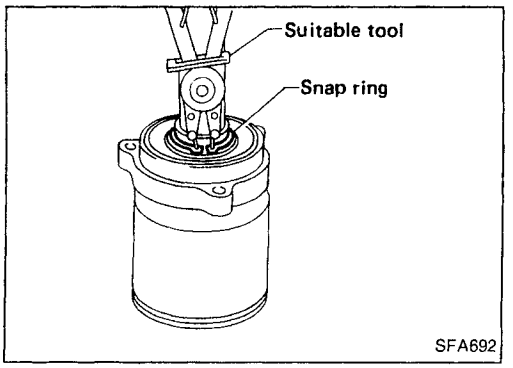

3. Press support bearing assembly off of drive shaft.

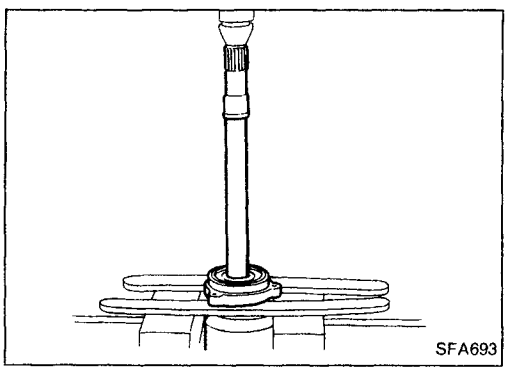

4. Separate support bearing from retainer.

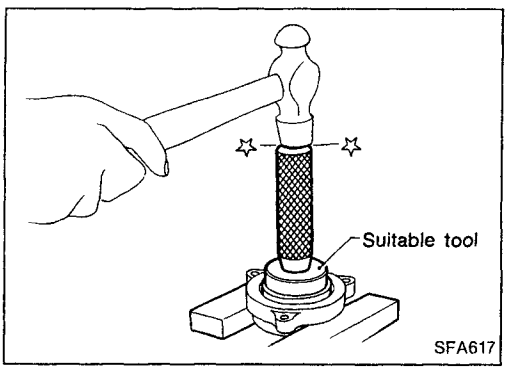

INSPECTION

Thoroughly clean all parts in cleaning solvent, and dry with compressed air. Check parts for evidence of deformation or other damage.

Drive shaft

Replace drive shaft if it is twisted or cracked.

Simpo PDF Merge and Split Unregistered Version - http://www.simpopdf.com

Drive Shaft (Cont'd)

Boot

Check boot for fatigue, cracks, or wear. Replace boot with new boot bands.

Joint assembly (Transaxle side)

- Check spider assembly for bearing, roller and washer damage. Replace spider assembly if necessary.
- Check housing for any damage. Replace housing set and spider assembly, if necessary.

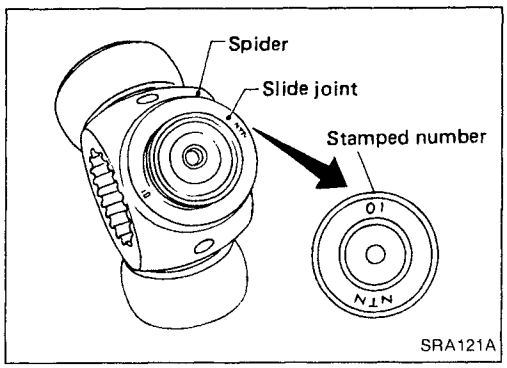

- When replacing only spider assembly, select a new spider assembly from among those listed in table below. Ensure the number stamped on sliding joint is the same as that stamped on new part.

Housing alone cannot be replaced. It must be replaced together with spider assembly.

TS70C

Stamped number	Part No.
00	39720-51E00
01	39720-51E01
02	39720-51E02
03	39720-51E03

TS79C

Stamped number	Part No.
00	39720-61E00
01	39720-61E01
02	39720-61E02
03	39720-61E03
04	39720-61E04
05	39720-61E05
06	39720-61E06

Joint assembly (Wheel side)

Replace joint assembly if it is deformed or damaged.

ASSEMBLY

- **After drive shaft has been assembled, ensure that it moves smoothly over its entire range without binding.**
- **Use NISSAN GENUINE GREASE or equivalent after every overhaul.**

Simpo PDF Merge and Split Unregistered Version - http://www.simpopdf.com

Drive Shaft (Cont'd)

Wheel side

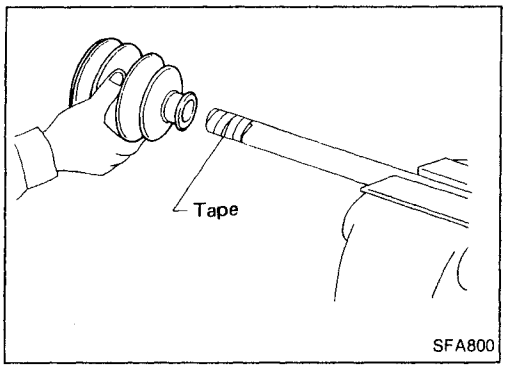

1. Install boot and new small boot band on drive shaft.
Cover drive shaft serration with tape so as not to damage boot during installation.

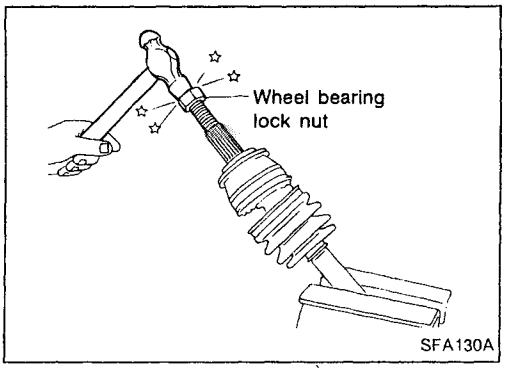

2. Set joint assembly onto drive shaft by lightly tapping it. Install joint assembly securely, ensuring marks which were made during disassembly are properly aligned.

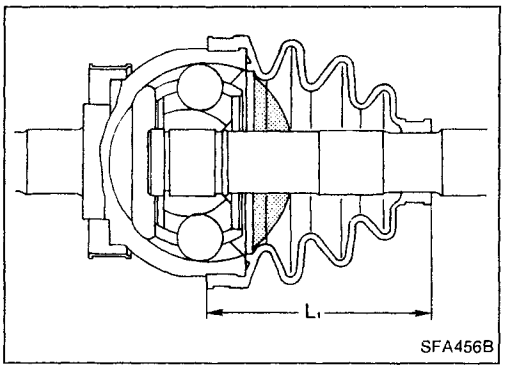

3. Pack drive shaft with specified amount of grease.
Specified amount of grease:
ZF80 95 g (3.35 oz)
ZF90 115 - 125 g (4.06 - 4.41 oz)
BF83 85 - 105 g (3.00 - 3.70 oz)
4. Make sure that boot is properly installed on the drive shaft groove.
Set boot so that it does not swell and deform when its length is "L_1".
Length "L_1":
ZF80 90.5 - 92.5 mm (3.563 - 3.642 in)
ZF90 96 - 98 mm (3.78 - 3.86 in)
BF83 94 - 96 mm (3.70 - 3.78 in)

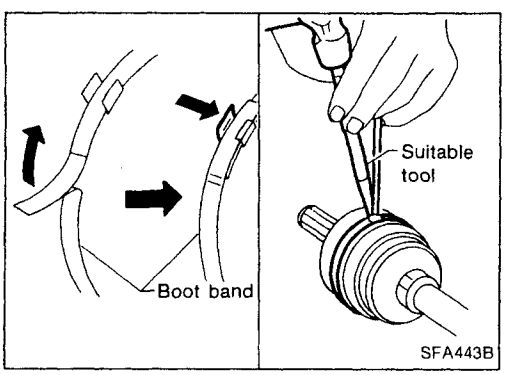

5. Lock new larger and smaller boot bands securely with a suitable tool.

Simpo PDF Merge and Split Unregistered Version - http://www.simpopdf.com

Drive Shaft (Cont'd)

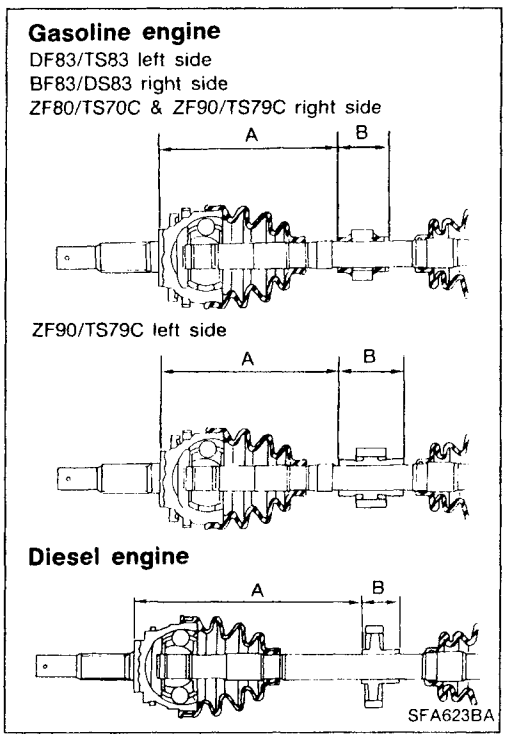

Dynamic damper

1. Use new damper band when reinstalling.
2. Install dynamic damper from stationary-joint side while holding it securely.

Length:

Unit: mm (in)

	ZF80/TS70C	ZF90/TS79C			BF83/TS83, DS83
		Gasoline engine		Diesel engine	
	RH	RH	LH	RH	
"A"	432 - 442 (17.01 - 17.40)		175.3 - 185.3 (6.90 - 7.30)	372.5 - 377.5 (14.67 - 14.86)	169 - 175 (6.65 - 6.89)
"B"	66 (2.60)		58 (2.28)	37 (1.46)	70 (2.76)

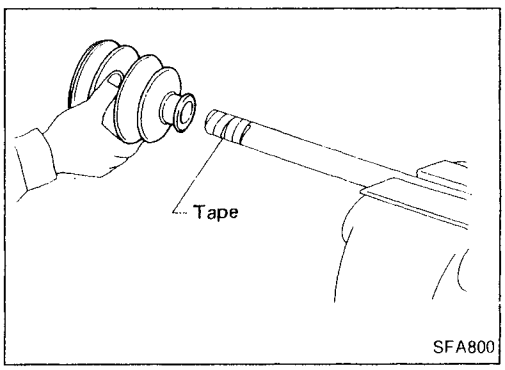

Transaxle side (TS70C, TS79C, TS83 type)

1. Install boot and new small boot band on drive shaft.

Cover drive shaft serration with tape so as not to damage boot during installation.

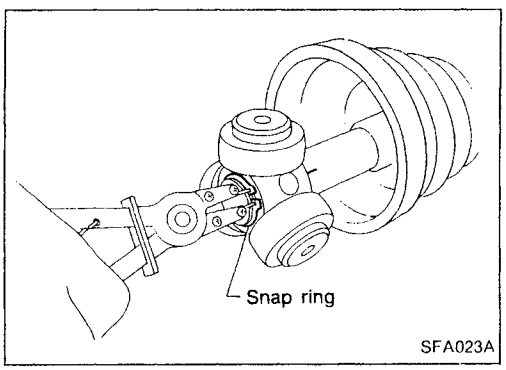

2. Install spider assembly securely, making sure the marks which were made during disassembly are properly aligned.
3. Install new snap ring.

FA

Simpo PDF Merge and Split Unregistered Version - http://www.simpopdf.com

Drive Shaft (Cont'd)

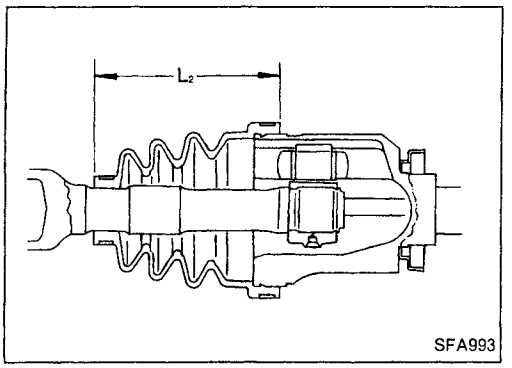

4. Pack drive shaft with specified amount of grease.
   Specified amount of grease:
   TS70C 110 - 120 g (3.88 - 4.23 oz)
   TS79C 155 - 165 g (5.47 - 5.82 oz)
   TS83 130 - 150 g (4.59 - 5.29 oz)
5. Install slide joint housing.
6. Set boot so that it does not swell and deform when its length is "L_2".
   Length "L_2":
   TS70C 95.5 - 97.5 mm (3.76 - 3.84 in)
   TS79C 101.5 - 103.5 mm (4.00 - 4.07 in)
   TS83 98 - 100 mm (3.86 - 3.94 in)

Make sure that boot is properly installed on the drive shaft groove.

7. Lock new larger and smaller boot bands securely with a suitable tool.

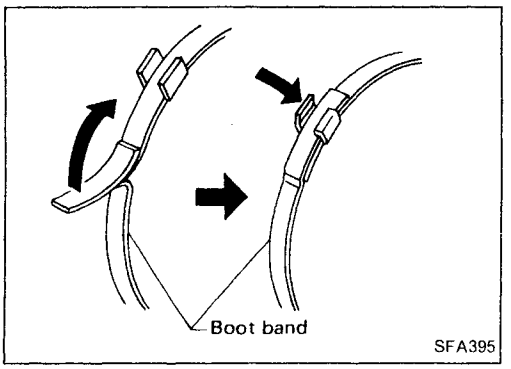

Transaxle side (DS83 type)

1. Install boot and new small boot band on drive shaft.

Cover drive shaft serration with tape to prevent damage boot during installation.

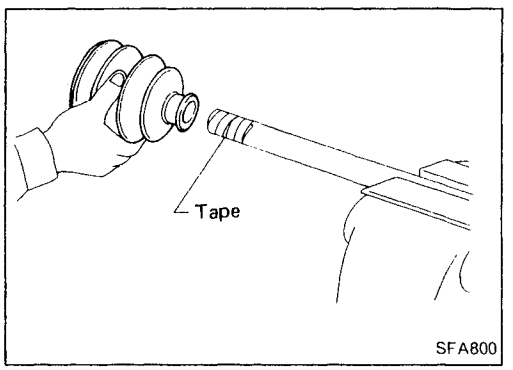

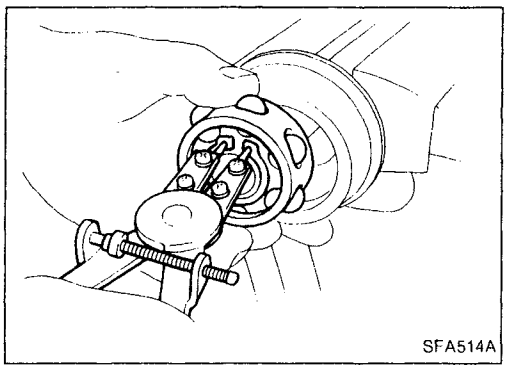

2. Install ball cage, inner race and balls as a unit, making sure the marks which were made during disassembly are properly aligned.
3. Install new snap ring "C".

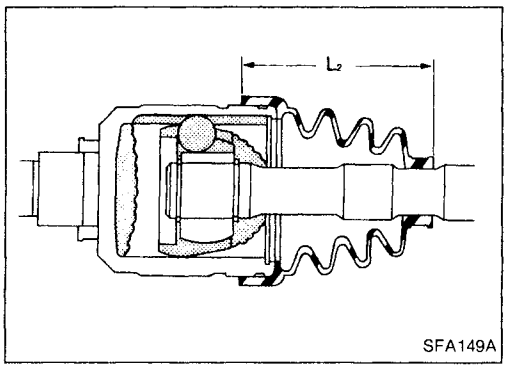

4. Pack drive shaft with specified amount of grease.
   Specified amount of grease:
   115 - 135 g (4.06 - 4.76 oz)
5. Install slide joint housing, then install new snap ring "A".
6. Make sure that boot is properly installed on the drive shaft groove.
   Set boot so that it does not swell and deform when its length is "L_2".
   Length "L_2":
   97 - 99 mm (3.82 - 3.90 in)

Simpo PDF Merge and Split Unregistered Version - http://www.simpopdf.com

Drive Shaft (Cont'd)

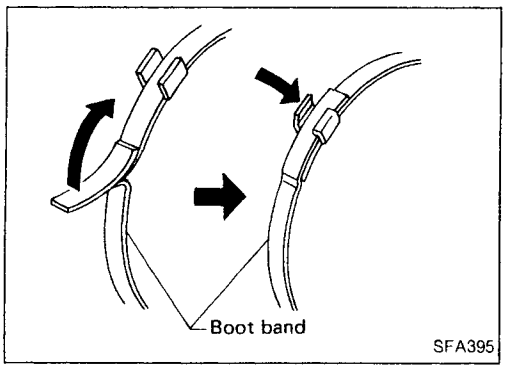

7. Lock new larger and smaller boot bands securely with a suitable tool.

Support bearing

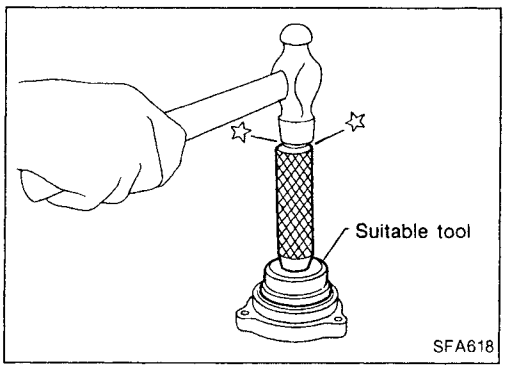

1. Install bearing into retainer.

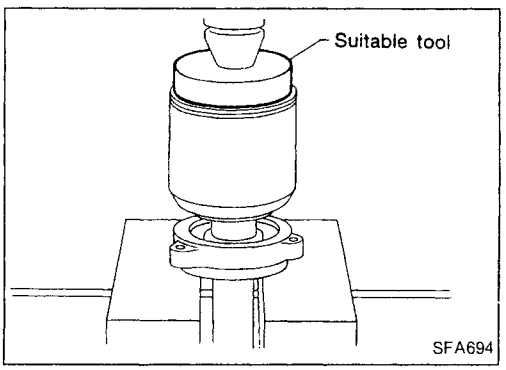

2. Press drive shaft into bearing.

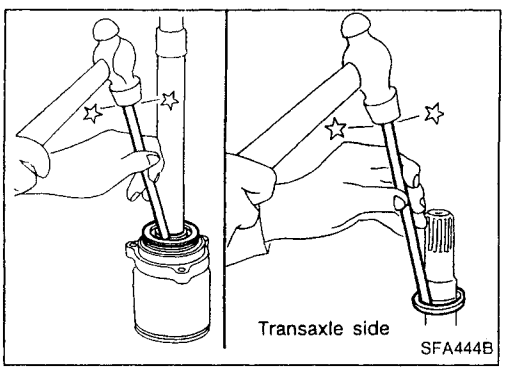

3. Install snap ring.
4. Install new dust shield.

FA

Simpo PDF Merge and Split Unregistered Version - http://www.simpopdf.com

SEC. 391•400•401

When installing rubber parts, final tightening must be carried out under unladen condition* with tires on ground.

*** Fuel, radiator coolant and engine oil full. Spare tire, jack, hand tools and mats in designated positions.**

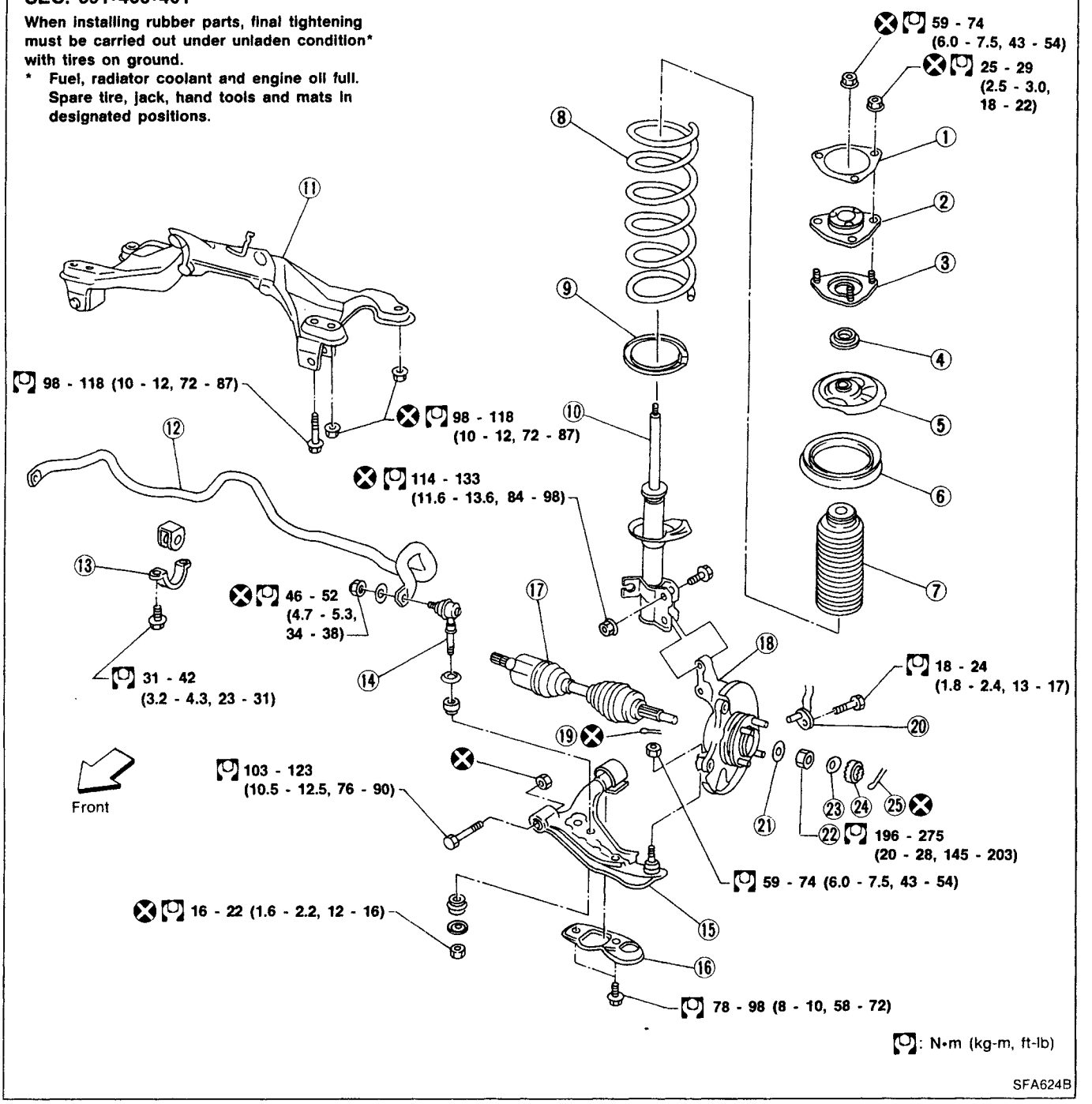

① Spacer
② Strut mounting insulator
③ Strut mounting insulator bracket
④ Thrust bearing
⑤ Upper spring seat
⑥ Upper spring rubber seat
⑦ Bumper rubber
⑧ Coil spring
⑨ Lower spring rubber seat
⑩ Strut assembly
⑪ Suspension member
⑫ Stabilizer bar
⑬ Stabilizer clamp
⑭ Connecting rod
⑮ Transverse link
⑯ Compression rod clamp
⑰ Drive shaft
⑱ Knuckle
⑲ Cotter pin
⑳ ABS sensor
㉑ Plain washer
㉒ Wheel bearing lock nut
㉓ Insulator
㉔ Adjusting cap
㉕ Cotter pin

Simpo PDF Merge and Split Unregistered Version - http://www.simpopdf.com

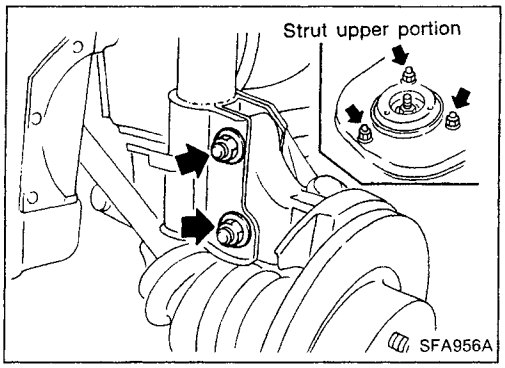

Coil Spring and Strut Assembly

REMOVAL AND INSTALLATION

- Remove strut assembly fixing bolts and nuts (to hoodledge).

Do not remove piston rod lock nut on vehicle.

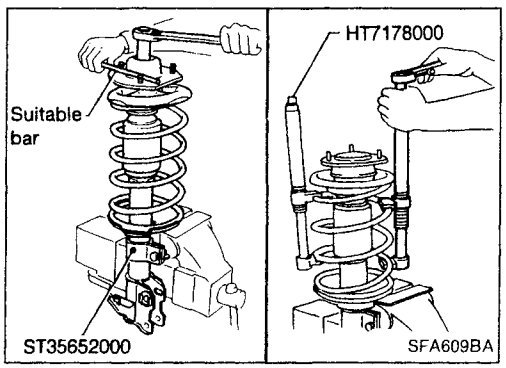

DISASSEMBLY

1. Set strut assembly on vise with Tool, then **loosen** piston rod lock nut.

Do not remove piston rod lock nut at this time.

2. Compress spring with Tool so that the strut mounting insulator can be turned by hand.

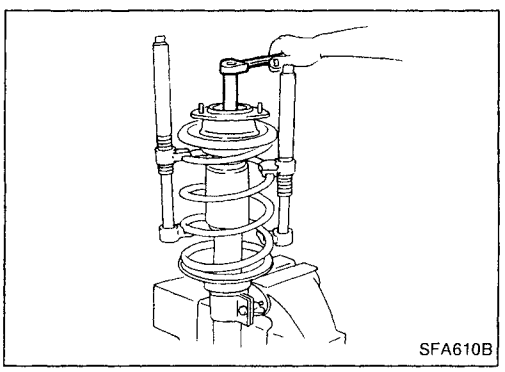

3. Remove piston rod lock nut.

FA

INSPECTION

Shock absorber assembly

- Check for smooth operation through a full stroke, both compression and extension.
- Check for oil leakage on welded or gland packing portion.
- Check piston rod for cracks, deformation or other damage.
- Replace if necessary.

Mounting insulator and rubber parts

- Check cemented rubber-to-metal portion for separation or cracks. Check rubber parts for deterioration.
- Replace if necessary.

Thrust bearing

- Check thrust bearing parts for abnormal noise or excessive rattle in axial direction. Replace if necessary.

Coil spring

- Check for cracks, deformation or other damage. Replace if necessary.

Simpo PDF Merge and Split Unregistered Version - http://www.simpopdf.com

Coil Spring and Strut Assembly (Cont'd)

ASSEMBLY

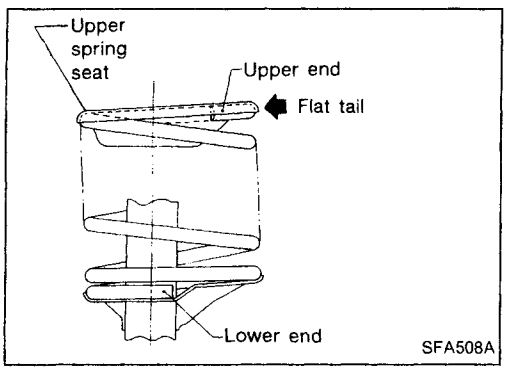

- When installing coil spring on strut, it must be positioned as shown in the figure at left.

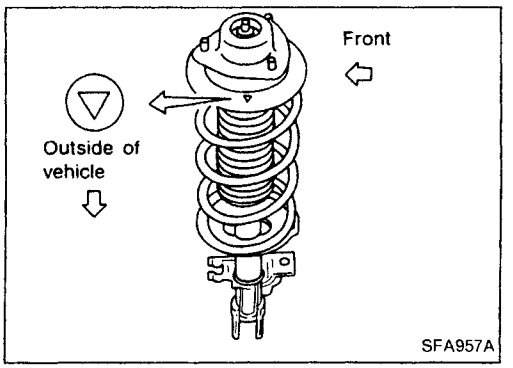

- When installing spring seat, make sure that it is positioned as shown.

Stabilizer Bar

REMOVAL AND INSTALLATION

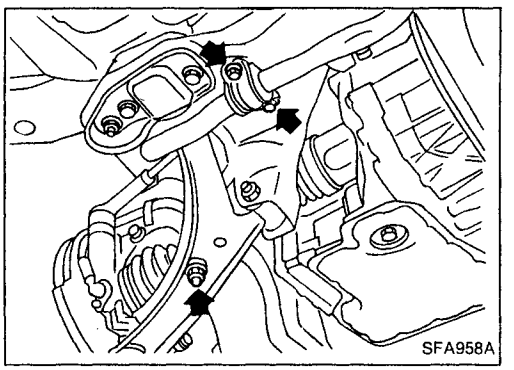

- Remove stabilizer bar.

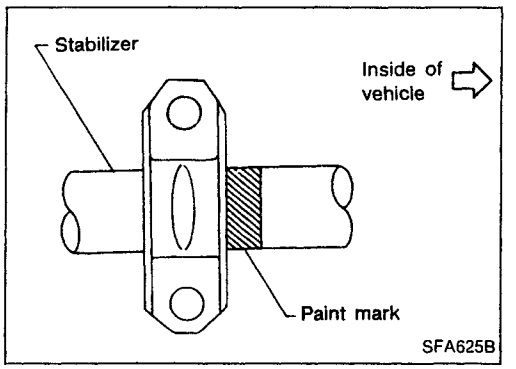

- When installing stabilizer, make sure that paint mark and clamp face in their correct directions.

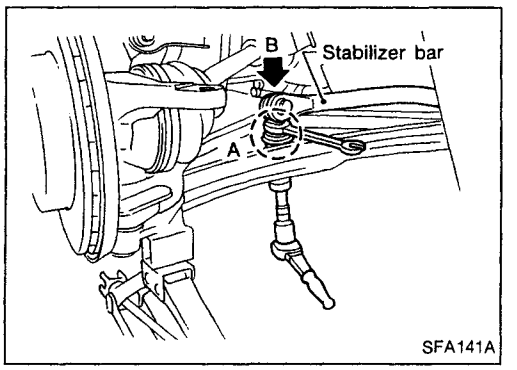

- When removing and installing stabilizer bar, fix portion A.

Simpo PDF Merge and Split Unregistered Version - http://www.simpopdf.com

Stabilizer Bar (Cont'd)

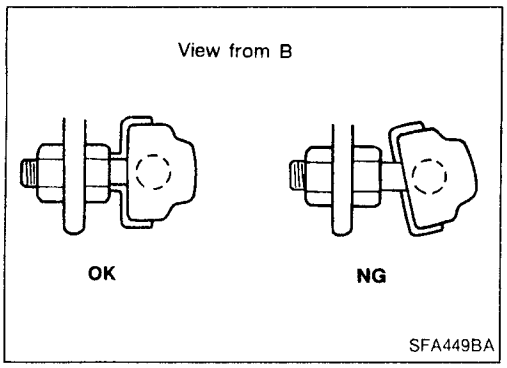

- Install stabilizer bar with ball joint socket properly placed.

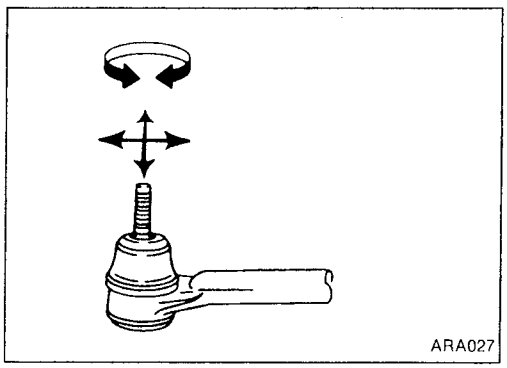

INSPECTION

- Check stabilizer for deformation or cracks. Replace if necessary.
- Check rubber bushings for deterioration or cracks. Replace if necessary.
- Check ball joint can rotate in all directions. If movement is not smooth and free, replace stabilizer bar connecting rod.

Transverse Link and Lower Ball Joint

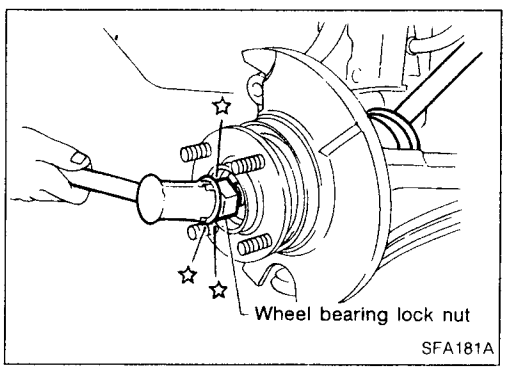

REMOVAL AND INSTALLATION

1. Remove wheel bearing lock nut.
2. Remove tie-rod ball joint.
3. Remove strut lower bracket fixing bolts and nuts.
4. Separate drive shaft from knuckle by slightly tapping drive shaft end.

Cover boots with shop towel so as not to damage them when removing drive shaft.

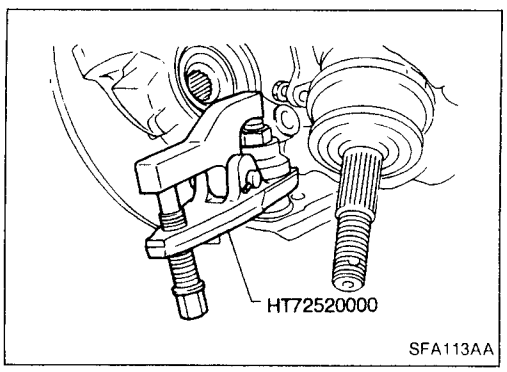

5. Separate lower ball joint stud from knuckle with Tool. Refer to FRONT AXLE — Wheel Hub and Knuckle (FA-8).

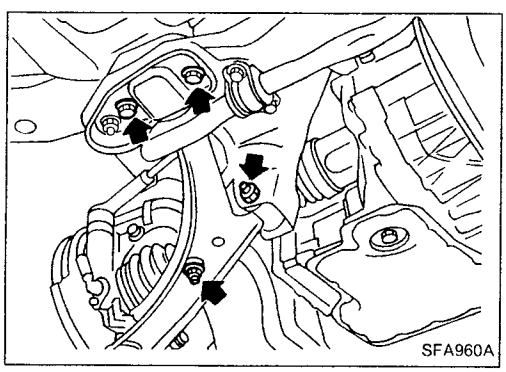

6. Remove fixing bolts and nuts as shown at left.
7. During installation, final tightening must be carried out at curb weight with tires on the ground.
8. After installation, check wheel alignment. Refer to ON-VEHICLE SERVICE — Front Wheel Alignment (FA-6).

FA

Simpo PDF Merge and Split Unregistered Version - http://www.simpopdf.com

Transverse Link and Lower Ball Joint (Cont'd)

INSPECTION

- Check transverse link for damage, cracks or deformation. Replace if necessary.
- Check rubber bushing for damage, cracks and deformation. Replace transverse link if necessary.

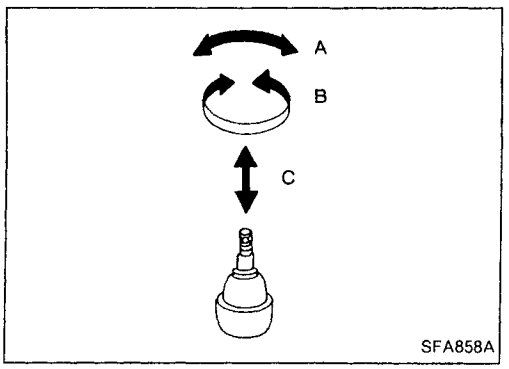

- Check ball joint for excessive play. Replace transverse link assembly if any of the following exists:
  - Ball stud is worn.
  - Joint is hard to swing.
  - Play in axial direction is excessive.

  Before checking, turn ball joint at least 10 revolutions so that ball joint is properly broken in.

  Swinging force "A":
  (measuring point: cotter pin hole of ball stud):
  8.24 - 57.37 N (0.84 - 5.85 kg, 1.85 - 12.90 lb)
  Turning torque "B":
  0.49 - 3.43 N·m (5.0 - 35 kg-cm, 4.3 - 30.4 in-lb)
  Vertical end play "C":
  0 mm (0 in)
- Check dust cover for damage. Replace it and cover clamp if necessary.

Simpo PDF Merge and Split Unregistered Version - http://www.simopdf.com

General Specifications

Suspension type	Independent macpherson struts
Strut type	Double-acting hydraulic
Stabilizer	For 14- and 15-inch wheel models

Inspection and Adjustment

WHEEL ALIGNMENT (Unladen*1)

Applied model				GA engine and SR engine models with 14-inch wheels	CD engine and SR engine models with 15-inch wheels
Camber		Degree minute (Decimal degree)	Minimum	−1°20′ (−1.33°)	
			Nominal	−0°35′ (−0.58°)	
			Maximum	0°10′ (0.17°)	
Caster		Degree minute (Decimal degree)	Minimum	0°40′ (0.67°)	
			Nominal	1°25′ (1.42°)	
			Maximum	2°10′ (2.17°)	
Kingpin inclination		Degree minute (Decimal degree)	Minimum	14°00′ (14.00°)	
			Nominal	14°45′ (14.75°)	
			Maximum	15°30′ (15.50°)	
Total toe-in	Distance (A - B)	mm (in)	Minimum	0 (0)	
			Nominal	2 (0.08)	
			Maximum	4 (0.16)	
	Angle (left plus right)	Degree minute (Decimal degree)	Minimum	0′ (0.00°)	
			Nominal	11′ (0.18°)	
			Maximum	22′ (0.37°)	
Wheel turning angle	Full turn*2 Inside	Degree minute (Decimal degree)	Minimum	38°00′ (38.00°)	34°00′ (34.00°)
			Nominal	41°00′ (41.00°)	37°00′ (37.00°)
			Maximum	42°00′ (42.00°)	38°00′ (38.00°)
	Outside	Degree minute (Decimal degree)	Nominal	34°00′ (34.00°)	31°00′ (31.00°)

*1: Fuel, radiator coolant and engine oil full. Spare tire, jack, hand tools and mats in designated positions.

*2: On power steering models, wheel turning force (at circumference of steering wheel) of 98 to 147 N (10 to 15 kg, 22 to 33 lb) with engine idle.

FA

Simpo PDF Merge and Split Unregistered Version - http://www.simpopdf.com

Inspection and Adjustment (Cont'd)

DRIVE SHAFT

Applied model	GA14DE, GA15DE	GA16DE, CD20	SR 20DE	
			RH	LH
Joint type				
Transaxle side	TS70C	TS79C	DS83	TS83
Wheel side	ZF80	ZF90	BF83	
Boot length mm (in)				
Transaxle side L_2	95.5 - 97.5 (3.76 - 3.84)	101.5 - 103.5 (4.00 - 4.07)	97 - 99 (3.82 - 3.90)	98 - 100 (3.86 - 3.94)
Wheel side L_1	90.5 - 92.5 (3.563 - 3.642)	96 - 98 (3.78 - 3.86)	94 - 96 (3.70 - 3.78)	
Grease	Nissan genuine grease or equivalent			
Capacity g (oz)				
Transaxle side	110 - 120 (3.88 - 4.23)	155 - 165 (5.47 - 5.82)	115 - 135 (4.06 - 4.76)	130 - 150 (4.59 - 5.29)
Wheel side	95 (3.35)	115 - 125 (4.06 - 4.41)	85 - 105 (3.00 - 3.70)	

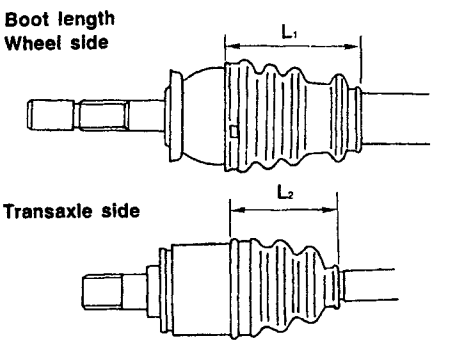

SFA396B

WHEEL BEARING

Wheel bearing axial end play limit mm (in)	0.05 (0.0020) or less
Wheel bearing lock nut tightening torque N·m (kg-m, ft-lb)	196 - 275 (20 - 28, 145 - 203)
Preload	
N·m (kg-cm, in-lb)	0.90 (9.2, 8.0)
At hub bolt N (kg, lb)	6.08 (0.62, 1.37)

WHEEL RUNOUT

Unit: mm (in)

Wheel type	Aluminum wheel	Steel wheel
Maximum radial runout limit	0.3 (0.012)	0.5 (0.020)
Maximum lateral runout limit	0.3 (0.012)	0.8 (0.031)

LOWER BALL JOINT

Swinging force "A" (Measured at cotter pin hole) N (kg, lb)	8.24 - 57.37 (0.84 - 5.85, 1.85 - 12.90)
Turning torque "B" N·m (kg-cm, in-lb)	0.49 - 3.43 (5.0 - 35, 4.3 - 30.4)
Vertical end play limit "C" mm (in)	0 (0)

Simpo PDF Merge and Split Unregistered Version - http://www.simpopdf.com

ACCELERATOR CONTROL, FUEL & EXHAUST SYSTEMS

SECTION FE

CONTENTS

ACCELERATOR CONTROL SYSTEM 2
Adjusting Accelerator Wire 2
FUEL SYSTEM 3
Fuel Pump and Gauge 4
EXHAUST SYSTEM 5

Simpo PDF Merge and Split Unregistered Version - http://www.simpopdf.com

CAUTION:

- **When removing accelerator wire, make a mark to indicate lock nut's initial position.**
- **Check that throttle valve opens fully when accelerator pedal is fully depressed. Check that throttle valve returns to idle position when accelerator pedal is released.**
- **Check accelerator control parts for improper contact with any adjacent parts.**
- **When connecting accelerator wire, be careful not to twist or scratch wire.**
- **For adjustment of A/T throttle wire, refer to in AT section ("Throttle Wire Adjustment", "ON-VEHICLE SERVICE").**

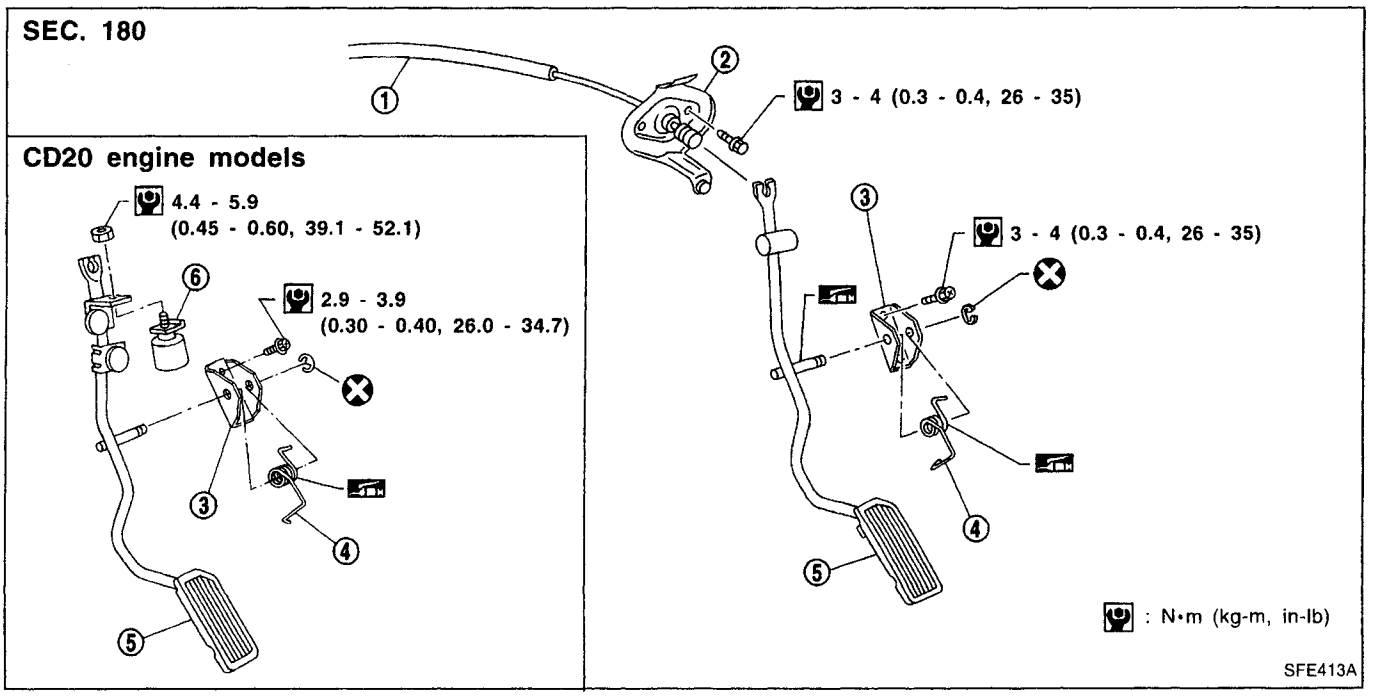

① Accelerator wire
② Wire bracket
③ Pedal bracket
④ Return spring
⑤ Accelerator pedal
⑥ Dynamic damper

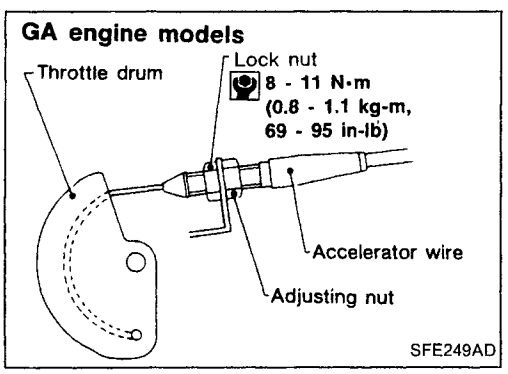

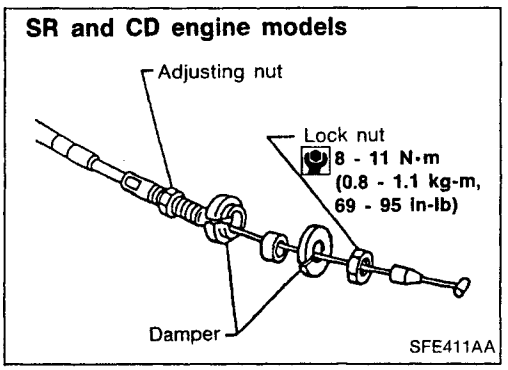

Adjusting Accelerator Wire

1. Loosen lock nut, and tighten adjusting nut until throttle drum starts to move.
2. From that position turn back adjusting nut 1.5 to 2 turns, and secure lock nut.

Simpo PDF Merge and Split Unregistered Version - http://www.simpopdf.com

WARNING:

When replacing fuel line parts, be sure to observe the following:

- **Put a "CAUTION: INFLAMMABLE" sign in workshop.**
- **Do not smoke while servicing fuel system. Keep open flames and sparks away from work area.**
- **Be sure to disconnect battery ground cable before conducting operations.**
- **Be sure to furnish workshop with a CO_2 fire extinguisher.**
- **Put drained fuel in an explosion-proof container and put lid on securely.**

CAUTION:

- **For ECCS engine models, release fuel pressure from fuel line. Refer to EC section ("Fuel Pressure Release", "BASIC SERVICE PROCEDURE").**
- **Do not disconnect any fuel line unless absolutely necessary.**
- **Plug hose and pipe openings to prevent entry of dust or dirt.**
- **Always replace O-ring and clamps with new ones.**
- **Do not kink or twist hose and tube when they are installed.**
- **Do not tighten hose clamps excessively to avoid damaging hoses.**
- **When installing fuel check valve, be careful of its designated direction. Refer to EC section ("FUEL CHECK VALVE", "EVAPORATIVE EMISSION SYSTEM").**
- **After installation, run engine and check for fuel leaks at connections.**

FE

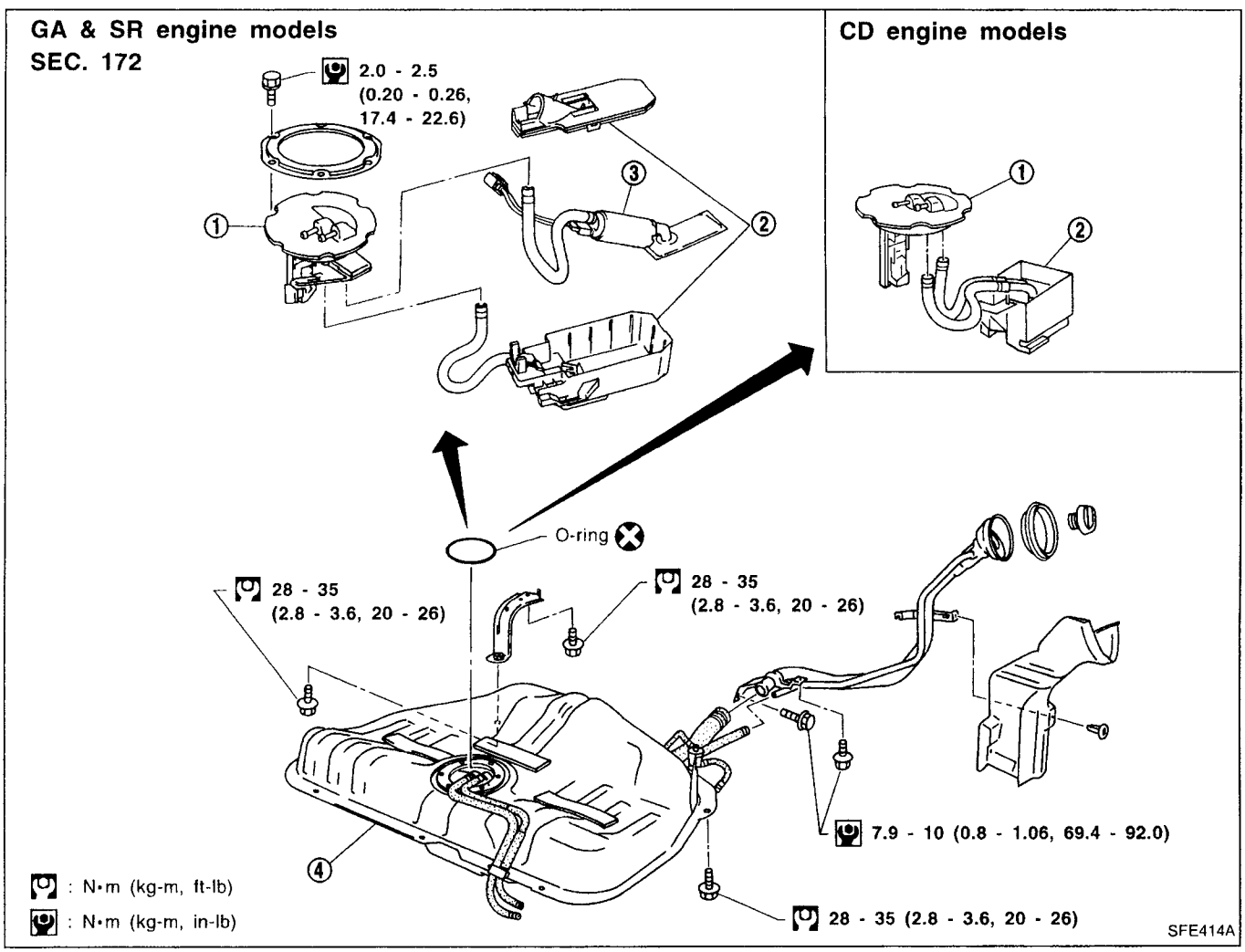

① Fuel gauge
② Chamber
③ Fuel pump
④ Fuel tank

Simpo PDF Merge and Split Unregistered Version - http://www.simpopdf.com

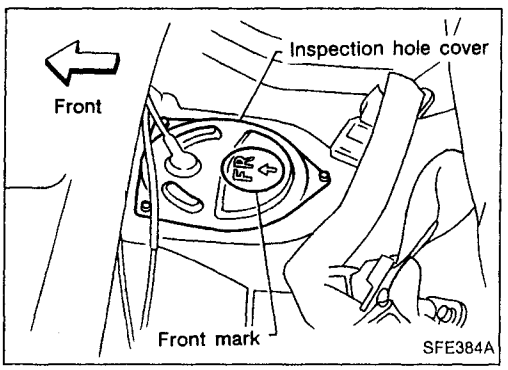

Fuel Pump and Gauge

REMOVAL

1. Release fuel pressure from fuel line.
   Refer to EC section ("Fuel Pressure Release", "BASIC SERVICE PROCEDURE").
2. Remove inspection hole cover located under the rear seat.

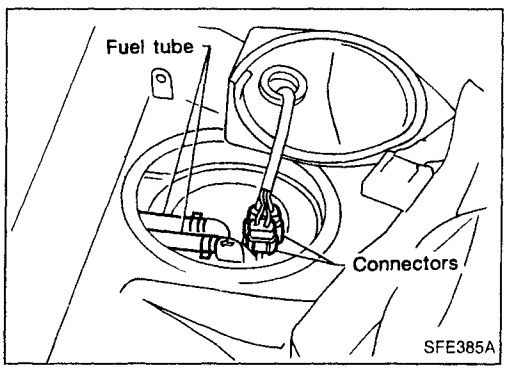

3. Disconnect fuel outlet, return tube and connectors.
4. Remove the six screws.

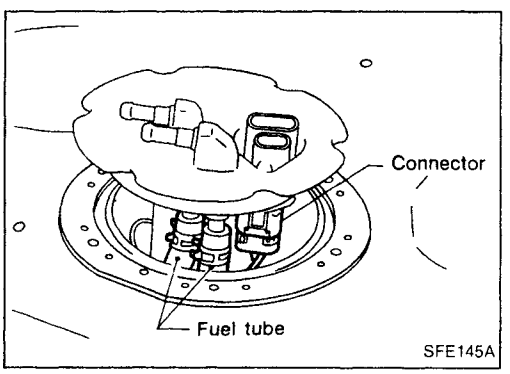

5. Remove fuel gauge assembly and disconnect tubes and connector.

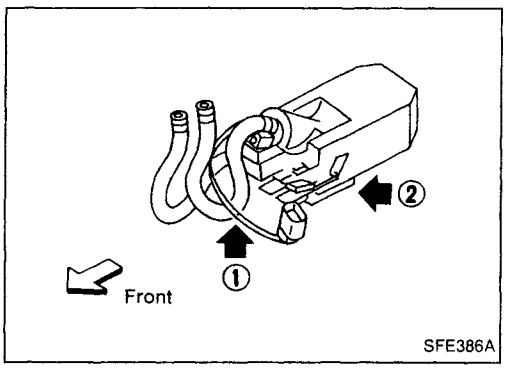

6. Remove fuel pump with fuel tank chamber as shown in the figure.

a. Pull up the front of fuel pump.
b. Slide it forward.

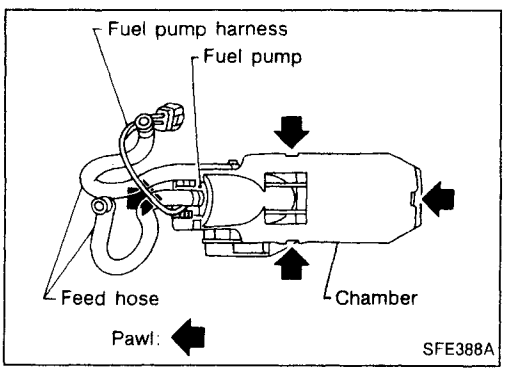

7. Remove fuel tank chamber from fuel pump.

INSTALLATION

To install, reverse the removal procedure.

CAUTION:

- **Tighten to specified torque.**
- **Install fuel pump harness on the left side of the feed hose as shown in the figure.**

Simpo PDF Merge and Split Unregistered Version - http://www.simpopdf.com

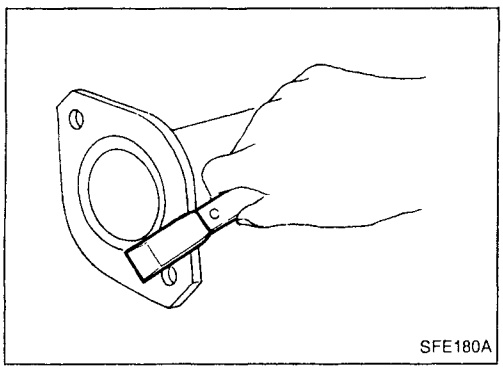

CAUTION:

- **Always replace exhaust gaskets with new ones when reassembling.**
  If gasket is left on flange surface, scrape off completely as shown at left.
- **With engine running, check all tube connections for exhaust gas leaks, and entire system for unusual noises.**
- **After installation, check to ensure that mounting brackets and mounting insulators are free from undue stress. If any of the above parts are not installed properly, excessive noise or vibration may be transmitted to the vehicle body.**

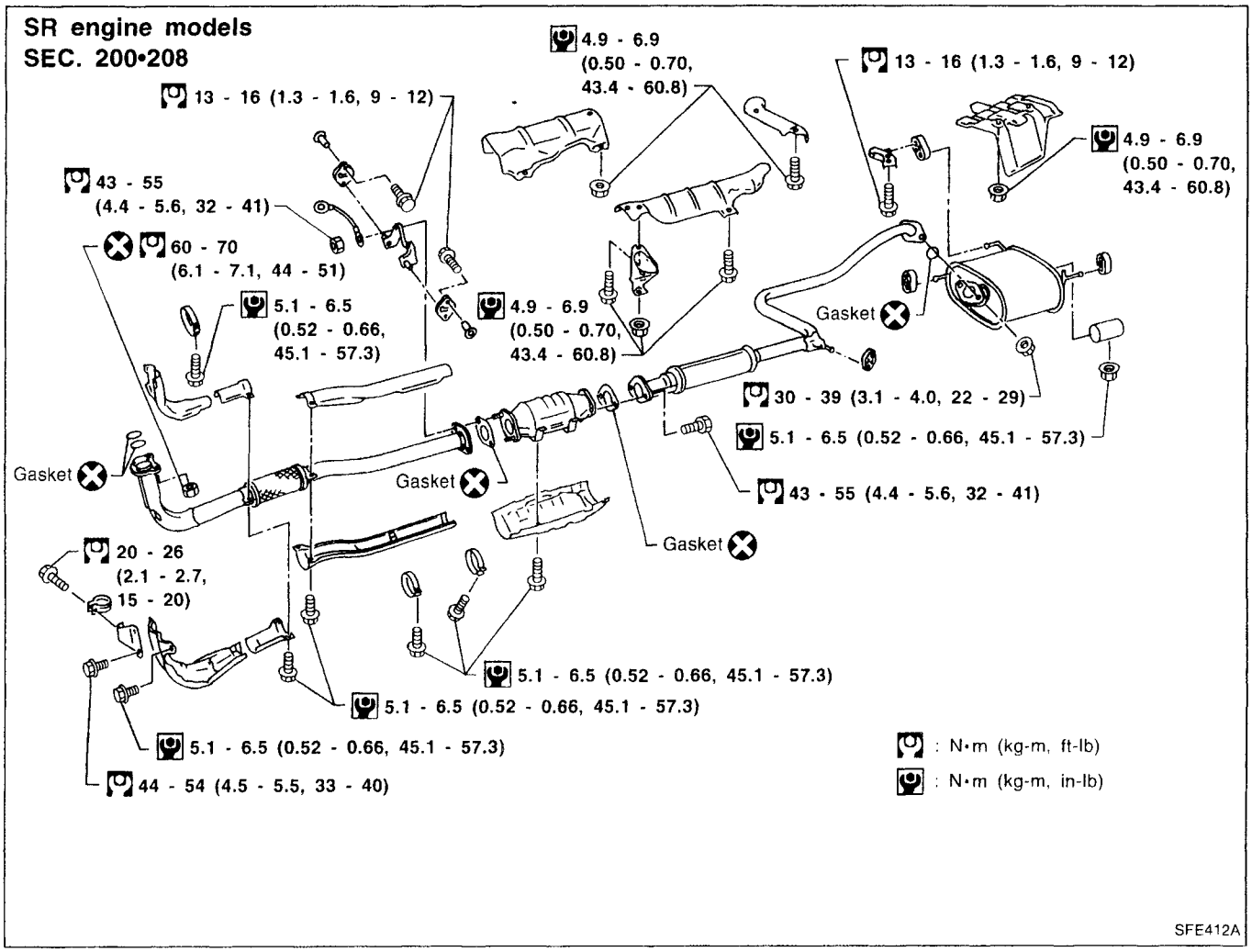

FE

Simpo PDF Merge and Split Unregistered Version - http://www.simpopdf.com

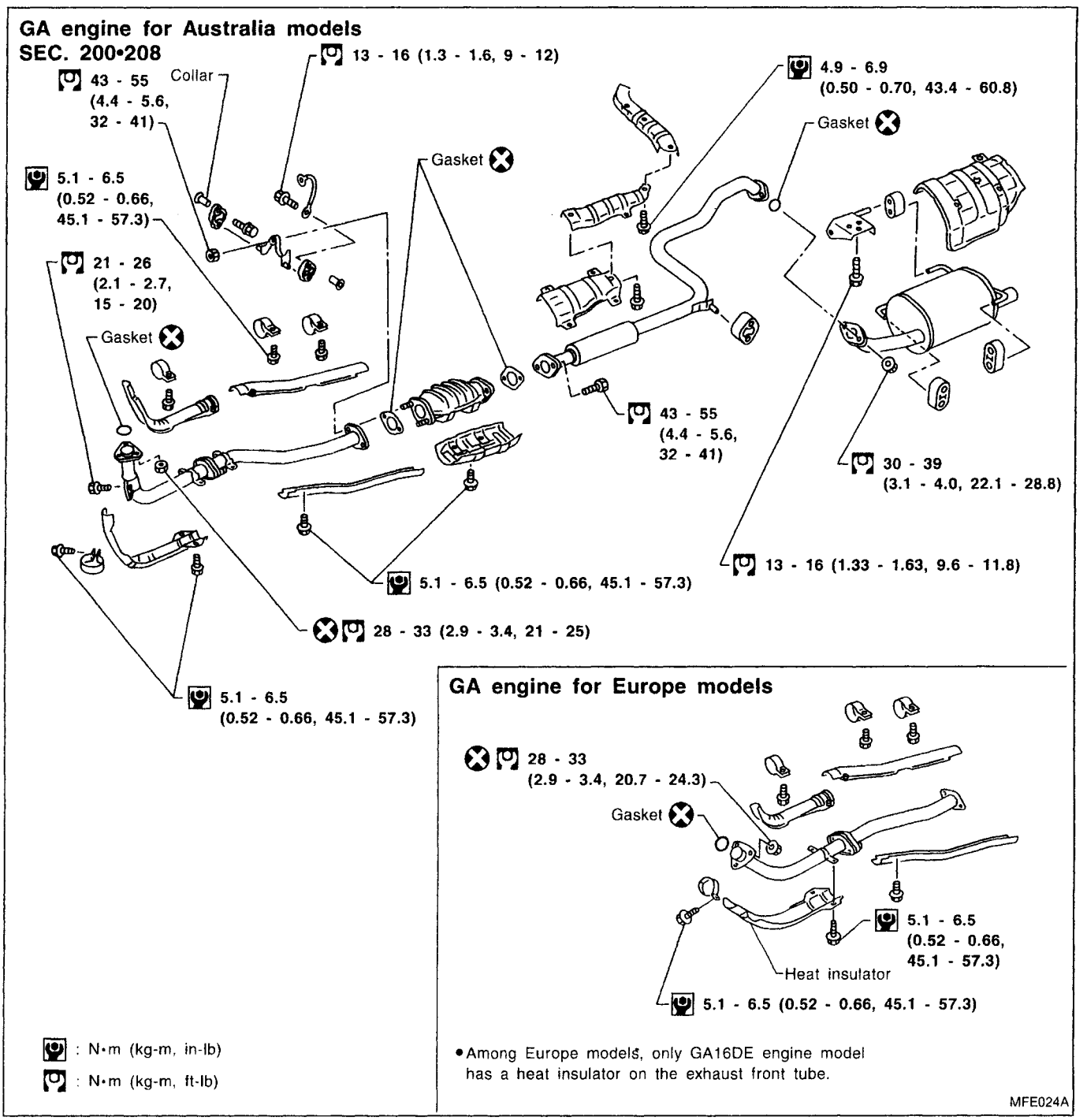

Simpo PDF Merge and Split Unregistered Version - http://www.simpopdf.com

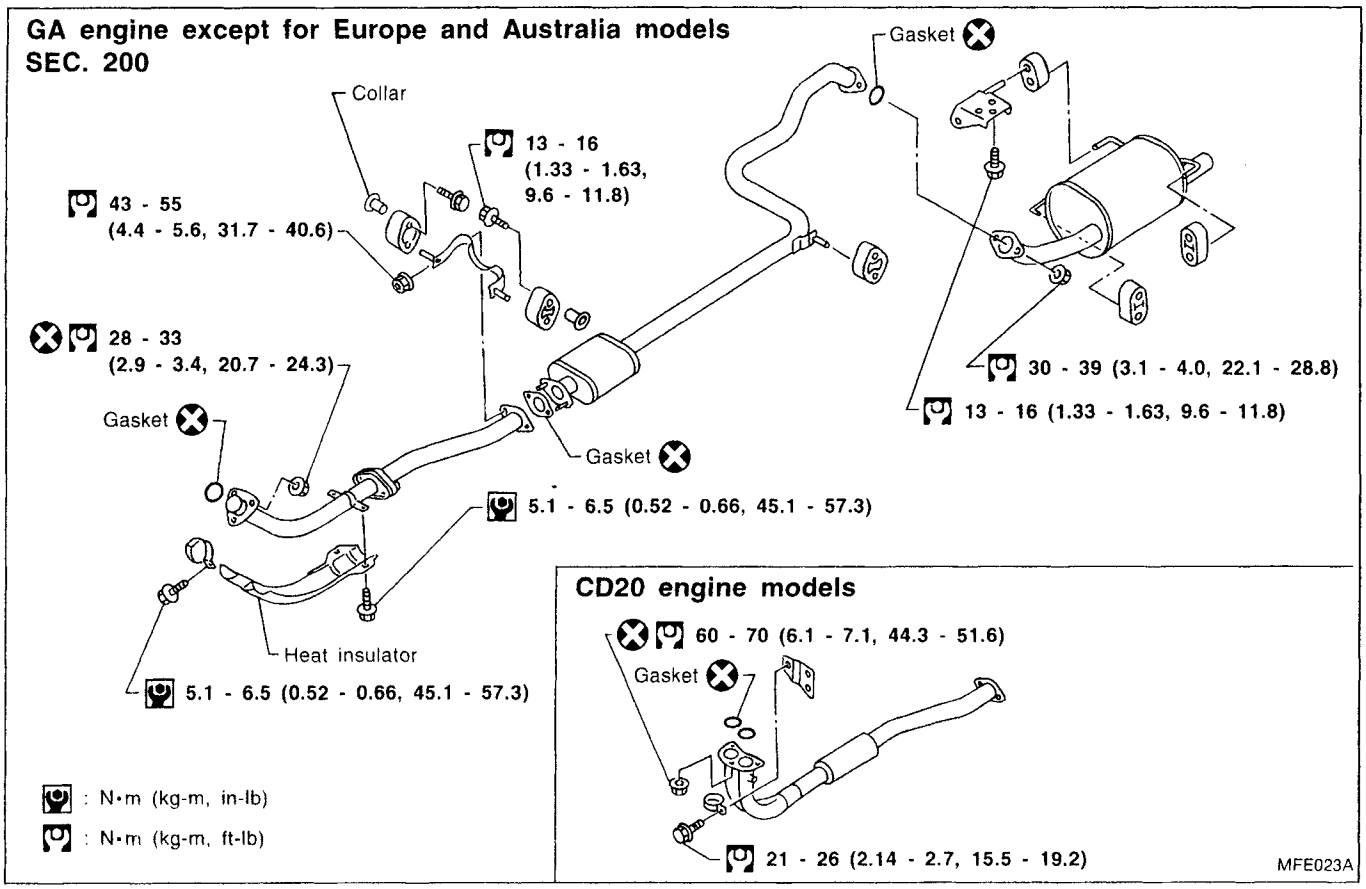

FE

Simpo PDF Merge and Split Unregistered Version - http://www.simpopdf.com

SECTION GI

CONTENTS

PRECAUTIONS 2
- Supplemental Restraint System (SRS) "AIR BAG" (Dual Air Bag System) 2
- Supplemental Restraint System (SRS) "AIR BAG" (Single Air Bag System) 2
- Precautions for NATS V2.0 (For Gasoline Engine Model) 3
- General Precautions 3
- Precautions for Multiport Fuel Injection System or ECCS Engine 5
- Precautions for Three Way Catalyst 5
- Engine Oils 5
- Precautions for Fuel 6

HOW TO USE THIS MANUAL 7

HOW TO READ WIRING DIAGRAMS 9
- Sample/Wiring Diagram — EXAMPL — 9
- Description 11
- Wiring Diagram Codes (Cell Codes) 17

HOW TO PERFORM EFFICIENT DIAGNOSIS FOR AN ELECTRICAL INCIDENT 18
- Work Flow 18
- Incident Simulation Tests 19
- Circuit Inspection 23

HOW TO FOLLOW FLOW CHART IN TROUBLE DIAGNOSES 29

CONSULT CHECKING SYSTEM 32
- Function and System Application 32
- Lithium Battery Replacement 32
- Checking Equipment 32

IDENTIFICATION INFORMATION 33
- Model Variation 33
- Identification Number 36
- Dimensions 39
- Wheels and Tires 39

LIFTING POINTS AND TOW TRUCK TOWING 40
- Preparation 40
- Board-on Lift 40
- Garage Jack and Safety Stand 41
- 2-pole Lift 42
- Tow Truck Towing 43

TIGHTENING TORQUE OF STANDARD BOLTS 44

SAE J1930 TERMINOLOGY LIST 45
- SAE J1930 Terminology List 45

Simpo PDF Merge and Split Unregistered Version - http://www.simpopdf.com

Observe the following precautions to ensure safe and proper servicing.

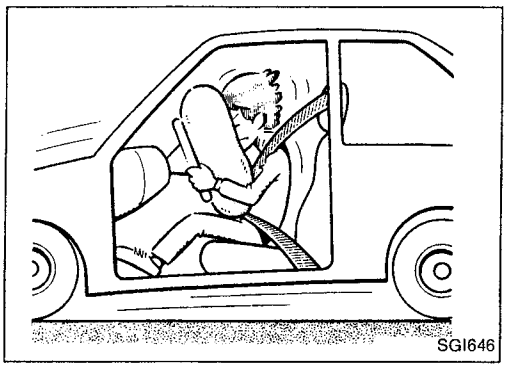
SGI646

Supplemental Restraint System (SRS) "AIR BAG" (Dual Air Bag System)

The Supplemental Restraint System "Air Bag" used along with a seat belt, helps to reduce the risk or severity of injury to the driver and front passenger in a frontal collision. The Supplemental Restraint System consists of air bag modules (located in the center of the steering wheel and on the instrument panel on the passenger side), a diagnosis sensor unit, warning lamp, wiring harness and spiral cable. Information necessary to service the system safely is included in the **RS section** of this Service Manual.

WARNING:

- **To avoid rendering the SRS inoperative, which could increase the risk of personal injury or death in the event of a collision which would result in air bag inflation, all maintenance must be performed by an authorized NISSAN dealer.**
- **Improper maintenance, including incorrect removal and installation of the SRS, can lead to personal injury caused by unintentional activation of the system.**
- **Do not use electrical test equipment on any circuit related to the SRS unless instructed to in this Service Manual. SRS wiring harnesses are covered with yellow insulation either just before the harness connectors or for the complete harness, for easy identification.**

Supplemental Restraint System (SRS) "AIR BAG" (Single Air Bag System)

The Supplemental Restraint System "Air Bag" and used along with a seat belt, helps to reduce the risk or severity of injury to the driver in a frontal collision. The Supplemental Restraint System consists of an air bag module (located in the center of the steering wheel), a diagnosis sensor unit, warning lamp, wiring harness and spiral cable. Information necessary to service the system safely is included in the **RS section** of this Service Manual.

WARNING:

- **To avoid rendering the SRS inoperative, which could increase the risk of personal injury or death in the event of a collision which would result in air bag inflation, all maintenance must be performed by an authorized NISSAN dealer.**
- **Improper maintenance, including incorrect removal and installation of the SRS, can lead to personal injury caused by unintentional activation of the system.**

Simpo PDF Merge and Split Unregistered Version - http://www.simpopdf.com

- Do not use electrical test equipment on any circuit related to the SRS unless instructed to in this Service Manual.

Precautions for NATS V2.0 (For Gasoline Engine Model)

NATS (Nissan Anti-Theft System)

NATS V2.0 will immobilize the engine if someone tries to start it without the registered key of NATS V2.0.
Both of the originally supplied ignition key IDs have been NATS registered.
The NATS security indicator is located on the instrument panel. The indicator blinks when the ignition switch is in "OFF" or "ACC" position. Therefore, NATS warns outsiders that the vehicle is equipped with the anti-theft system.

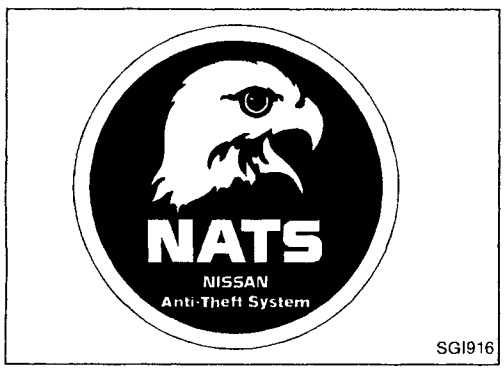

SGI916

- When NATS detects trouble, the malfunction indicator lamp (MIL) blinks.
  This blinking indicates that the anti-theft is not functioning, so prompt service is required.
- When servicing NATS (trouble diagnoses, system initialisation and additional registration of other NATS ignition key IDs), CONSULT hardware and CONSULT NATS software is necessary.
  Regarding the procedures of NATS initialisation and NATS ignition key ID registration, refer to CONSULT operation manual, NATS V2.0.

Therefore, CONSULT NATS software (program card and operation manual) must be kept strictly confidential to maintain the integrity of the anti-theft function.

- When servicing NATS V2.0 (trouble diagnoses, system initialisation and additional registration of other NATS ignition key IDs), it may be necessary to re-register original key identification. Therefore, be sure to receive all keys from vehicle owner.
  A maximum of four key IDs can be registered into NATS.
- When failing to start the engine first-time using the key of NATS V2.0, start as follows.
  (1) Turn ignition key to "OFF".
  (2) Wait approx. 5 seconds.
  (3) Turn ignition key to "START" again while keeping the key apart from any others on key-chain.

General Precautions

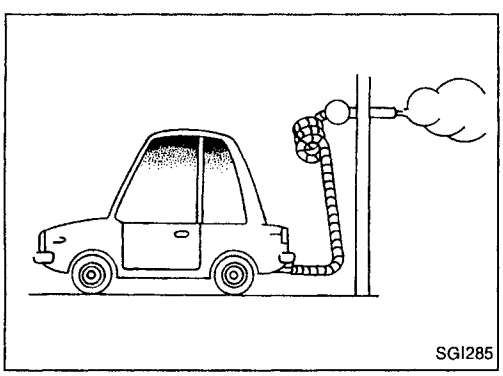
SGI285

- Do not operate the engine for an extended period of time without proper exhaust ventilation.
  Keep the work area well ventilated and free of any flammable materials. Special care should be taken when handling any flammable or poisonous materials, such as gasoline, refrigerant gas, etc. When working in a pit or other enclosed area, be sure to properly ventilate the area before working with hazardous materials.
  Do not smoke while working on the vehicle.

Simpo PDF Merge and Split Unregistered Version - http://www.simpopdf.com

General Precautions (Cont'd)

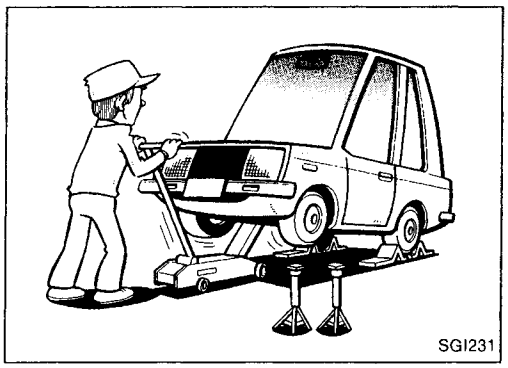
SGI231

- Before jacking up the vehicle, apply wheel chocks or other tire blocks to the wheels to prevent the vehicle from moving. After jacking up the vehicle, support the vehicle weight with safety stands at the points designated for proper lifting before working on the vehicle.
  These operations should be done on a level surface.
- When removing a heavy component such as the engine or transaxle/transmission, be careful not to lose your balance and drop them. Also, do not allow them to strike adjacent parts, especially the brake tubes and master cylinder.

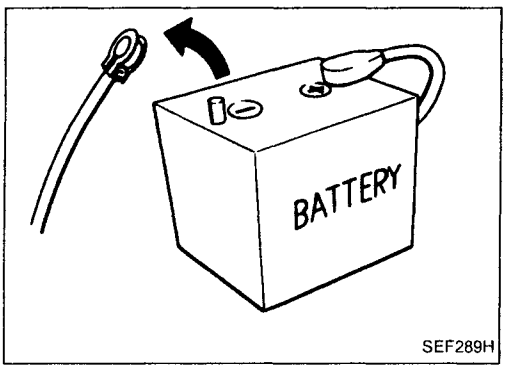

SEF289H

- Before starting repairs which do not require battery power:
  Turn off ignition switch.
  Disconnect the negative battery terminal.

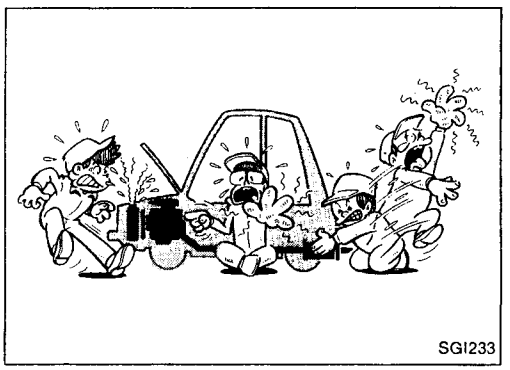
SGI233

- To prevent serious burns:
  Avoid contact with hot metal parts.
  Do not remove the radiator cap when the engine is hot.

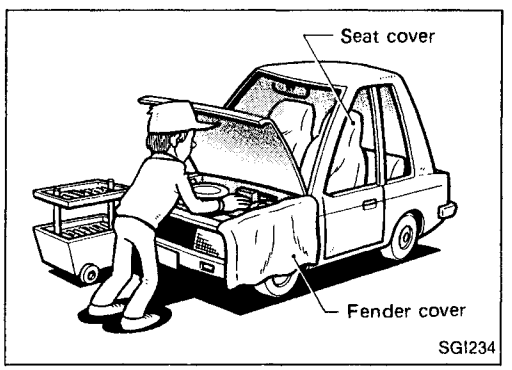

SGI234

- Before servicing the vehicle:
  Protect fenders, upholstery and carpeting with appropriate covers.
  Take caution that keys, buckles or buttons do not scratch paint.

- Clean all disassembled parts in the designated liquid or solvent prior to inspection or assembly.
- Replace oil seals, gaskets, packings, O-rings, locking washers, cotter pins, self-locking nuts, etc. with new ones.
- Replace inner and outer races of tapered roller bearings and needle bearings as a set.
- Arrange the disassembled parts in accordance with their assembled locations and sequence.
- Do not touch the terminals of electrical components which use microcomputers (such as ECMs).
  Static electricity may damage internal electronic components.

Simpo PDF Merge and Split Unregistered Version - http://www.simpopdf.com

General Precautions (Cont'd)

- After disconnecting vacuum or air hoses, attach a tag to indicate the proper connection.
- Use only the fluids and lubricants specified in this manual.
- Use approved bonding agent, sealants or their equivalents when required.
- Use tools and recommended special tools where specified for safe and efficient service repairs.
- When repairing the fuel, oil, water, vacuum or exhaust systems, check all affected lines for leaks.
- Dispose of drained oil or the solvent used for cleaning parts in an appropriate manner.

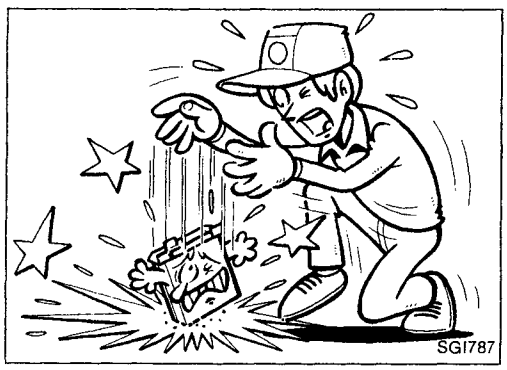

Precautions for Multiport Fuel Injection System or ECCS Engine

- Before connecting or disconnecting any harness connector for the multiport fuel injection system or ECM (ECCS control module):
  Turn ignition switch to "OFF" position.
  Disconnect negative battery terminal.
  Otherwise, there may be damage to ECM.
- Before disconnecting pressurized fuel line from fuel pump to injectors, be sure to release fuel pressure.
- Be careful not to jar components such as ECM and mass air flow sensor.

Precautions for Three Way Catalyst

If a large amount of unburned fuel flows into the catalyst, the catalyst temperature will be excessively high. To prevent this, follow the instructions below:

- Use unleaded gasoline only. Leaded gasoline will seriously damage the three way catalyst.
- When checking for ignition spark or measuring engine compression, make tests quickly and only when necessary.
- Do not run engine when the fuel tank level is low, otherwise the engine may misfire causing damage to the catalyst.

Do not place the vehicle on flammable material. Keep flammable material off the exhaust pipe and the three way catalyst.

Engine Oils

Prolonged and repeated contact with used engine oil may cause skin cancer. Try to avoid direct skin contact with used oil. If skin contact is made, wash thoroughly with soap or hand cleaner as soon as possible.

HEALTH PROTECTION PRECAUTIONS

- Avoid prolonged and repeated contact with oils, particularly used engine oils.
- Wear protective clothing, including impervious gloves where practicable.
- Do not put oily rags in pockets.
- Avoid contaminating clothes, particularly underpants, with oil.
- Heavily soiled clothing and oil-impregnated footwear should not be worn. Overalls must be cleaned regularly.
- First Aid treatment should be obtained immediately for open cuts and wounds.
- Use barrier creams, applying them before each work period, to help the removal of oil from the skin.

Simpo PDF Merge and Split Unregistered Version - http://www.simpopdf.com

Engine Oils (Cont'd)

- Wash with soap and water to ensure all oil is removed (skin cleansers and nail brushes will help). Preparations containing lanolin replace the natural skin oils which have been removed.
- Do not use gasoline, kerosine, diesel fuel, gas oil, thinners or solvents for cleaning skin.
- If skin disorders develop, obtain medical advice without delay.
- Where practicable, degrease components prior to handling.
- Where there is a risk of eye contact, eye protection should be worn, for example, chemical goggles or face shields; in addition an eye wash facility should be provided.

ENVIRONMENTAL PROTECTION PRECAUTIONS

Burning used engine oil in small space heaters or boilers can be recommended only for units of approved design. The heating system must meet the requirements of HM Inspectorate of Pollution for small burners of less than 0.4 MW. If in doubt check with the appropriate local authority and/or manufacturer of the approved appliance.
Dispose of used oil and used oil filters through authorized waste disposal contractors to licensed waste disposal sites, or to the waste oil reclamation trade. If in doubt, contact the local authority for advice on disposal facilities.
It is illegal to pour used oil on to the ground, down sewers or drains, or into water courses.
The regulations concerning the pollution of the environment will vary between regions.

Precautions for Fuel

GASOLINE ENGINE:

For Europe

Unleaded gasoline of at least 95 octane (RON)
CAUTION:
Do not use leaded gasoline. Using leaded gasoline will damage the catalytic converter.

Except Europe

Unleaded gasoline of at least 91 octane (RON)

DIESEL ENGINE*:

Diesel fuel of at least 50 cetane

* If two types of diesel fuel are available, use summer or winter fuel properly according to the following temperature conditions.

- Above –7°C (20°F) ... Summer type diesel fuel.
- Below –7°C (20°F) ... Winter type diesel fuel.

CAUTION:

- **Do not use home heating oil, gasoline, or other alternate fuels in your diesel engine. The use of those can cause engine damage.**
- **Do not use summer fuel at temperature below –7°C (20°F). The cold temperatures will cause wax to form in the fuel. As a result, it may prevent the engine from running smoothly.**
- **Do not add gasoline or other alternate fuels to diesel fuel.**

Simpo PDF Merge and Split Unregistered Version - http://www.simpopdf.com

- **ALPHABETICAL INDEX** is provided at the end of this manual so that you can rapidly find the item and page you are searching for.
- **A QUICK REFERENCE INDEX,** a black tab (e.g. BR) is provided on the first page. You can quickly find the first page of each section by mating it to the section's black tab.
- **THE CONTENTS** are listed on the first page of each section.
- **THE TITLE** is indicated on the upper portion of each page and shows the part or system.
- **THE PAGE NUMBER** of each section consists of two letters which designate the particular section and a number (e.g. "BR-5").
- **THE LARGE ILLUSTRATIONS** are exploded views (See below) and contain tightening torques, lubrication points, section number of the **PARTS CATALOG** (e.g. SEC.440) and other information necessary to perform repairs.
  The illustrations should be used in reference to service matters only. When ordering parts, refer to the appropriate **PARTS CATALOG.**

"Example"

SEC. 440

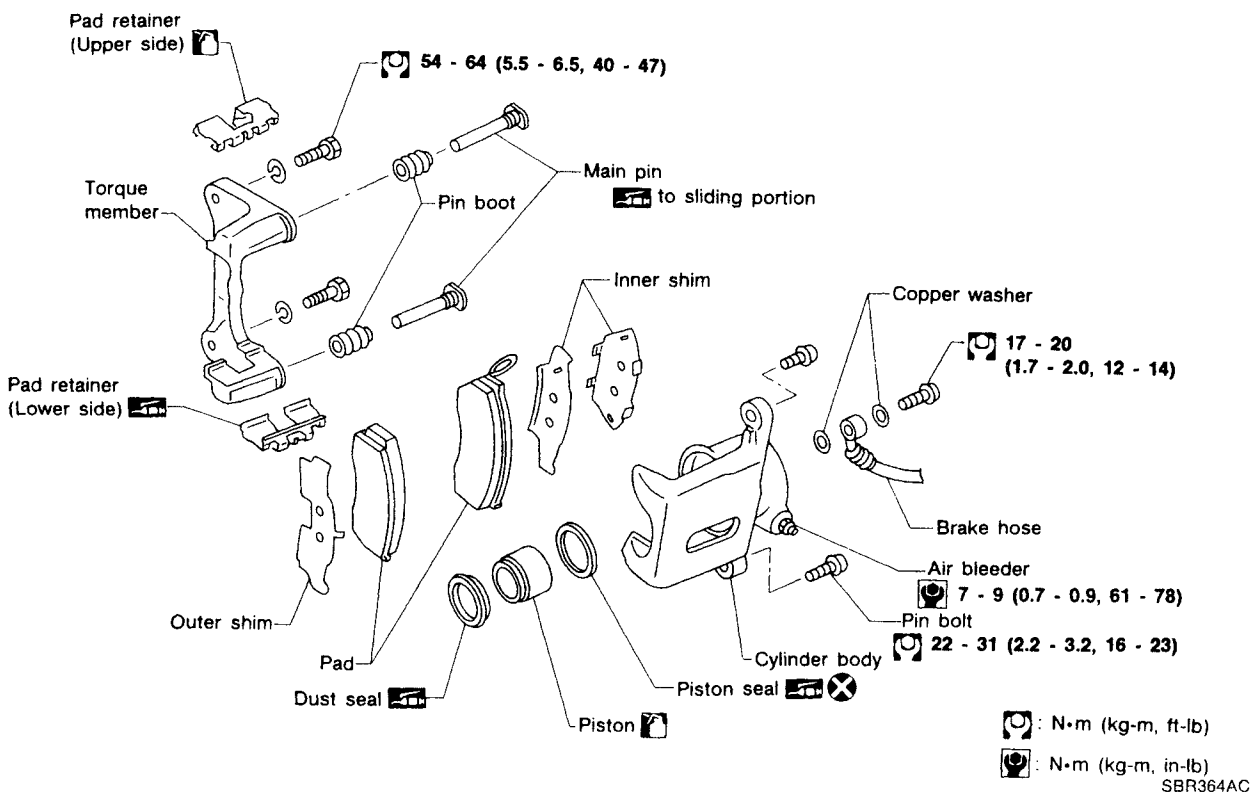

- **THE SMALL ILLUSTRATIONS** show the important steps such as inspection, use of special tools, knacks of work and hidden or tricky steps which are not shown in the previous large illustrations. Assembly, inspection and adjustment procedures for the complicated units such as the automatic transaxle or transmission, etc. are presented in a step-by-step format where necessary.

Simpo PDF Merge and Split Unregistered Version - http://www.simpopdf.com

- The following **SYMBOLS AND ABBREVIATIONS** are used:

	:	Tightening torque	M/T	:	Manual Transaxle/Transmission
	:	Should be lubricated with grease. Unless otherwise indicated, use recommended multi-purpose grease.	A/T	:	Automatic Transaxle/ Transmission
			A/C	:	Air Conditioner
			P/S	:	Power Steering
	:	Should be lubricated with oil.	Tool	:	Special Service Tools
	:	Sealing point	SAE	:	Society of Automotive Engineers, Inc.
	:	Checking point			
	:	Always replace after every disassembly.	ATF	:	Automatic Transmission Fluid
 (P)	:	Apply petroleum jelly.	D_1	:	Drive range 1st gear
(ATF)	:	Apply ATF.	D_2	:	Drive range 2nd gear
★	:	Select with proper thickness.	D_3	:	Drive range 3rd gear
☆	:	Adjustment is required.	D_4	:	Drive range 4th gear
SDS	:	Service Data and Specifications	OD	:	Overdrive
LH, RH	:	Left-Hand, Right-Hand	2_2	:	2nd range 2nd gear
FR, RR	:	Front, Rear	2_1	:	2nd range 1st gear
			1_2	:	1st range 2nd gear
			1_1	:	1st range 1st gear

- The **UNITS** given in this manual are primarily expressed as the SI UNIT (International System of Unit), and alternatively expressed in the metric system and in the yard/pound system.

  "Example"

  Tightening torque:

  59 - 78 N·m (6.0 - 8.0 kg-m, 43 - 58 ft-lb)

- **TROUBLE DIAGNOSES** are included in sections dealing with complicated components.
- **SERVICE DATA AND SPECIFICATIONS** are contained at the end of each section for quick reference of data.
- The captions **WARNING** and **CAUTION** warn you of steps that must be followed to prevent personal injury and/or damage to some part of the vehicle.
  WARNING indicates the possibility of personal injury if instructions are not followed.
  CAUTION indicates the possibility of component damage if instructions are not followed.
  BOLD TYPED STATEMENTS except **WARNING** and **CAUTION** give you helpful information.

Simpo PDF Merge and Split Unregistered Version - http://www.simpopdf.com

Sample/Wiring Diagram — EXAMPL —

- For Description, refer to GI-11.

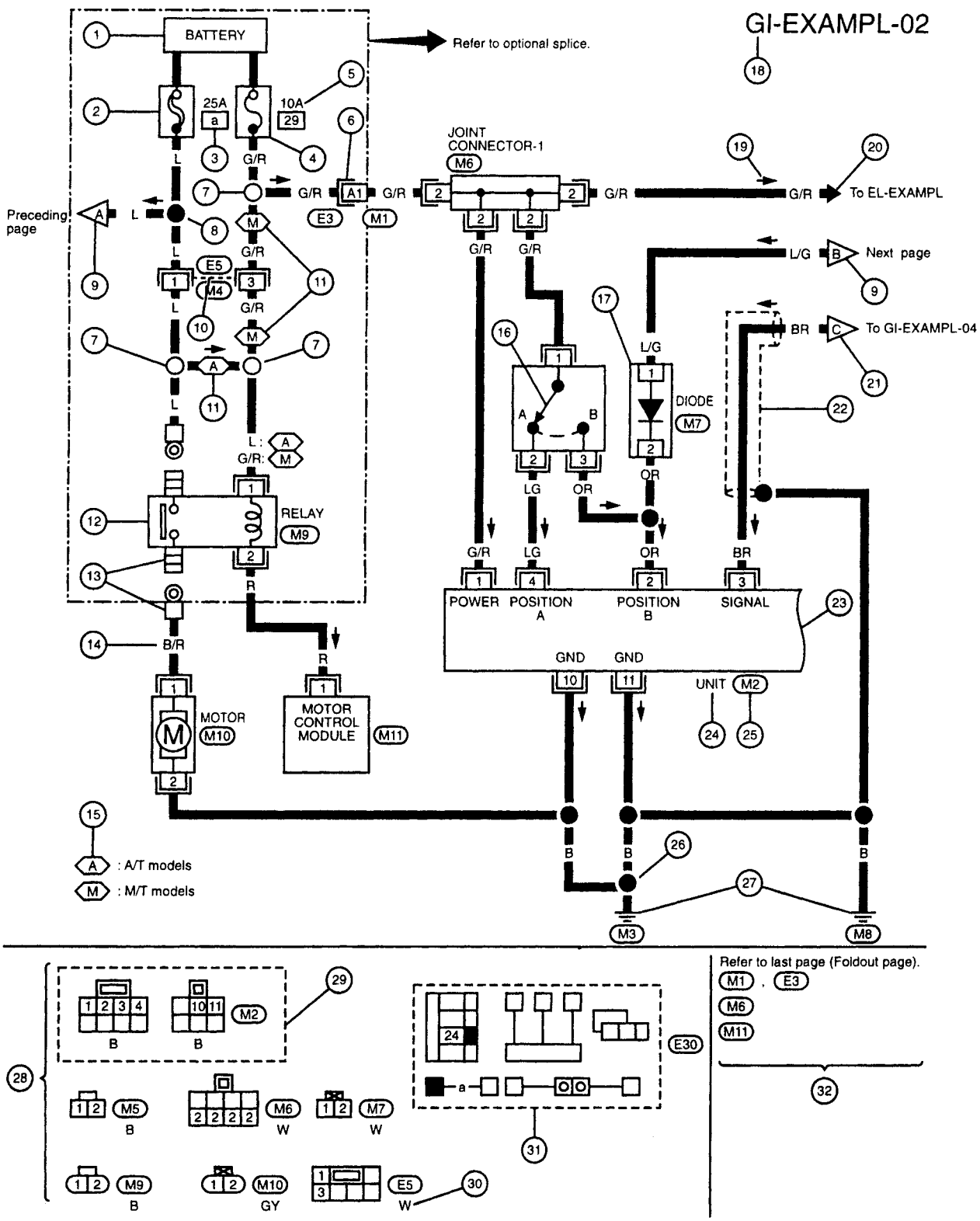

Simpo PDF Merge and Split Unregistered Version - http://www.simpopdf.com

OPTIONAL SPLICE

Optional splice

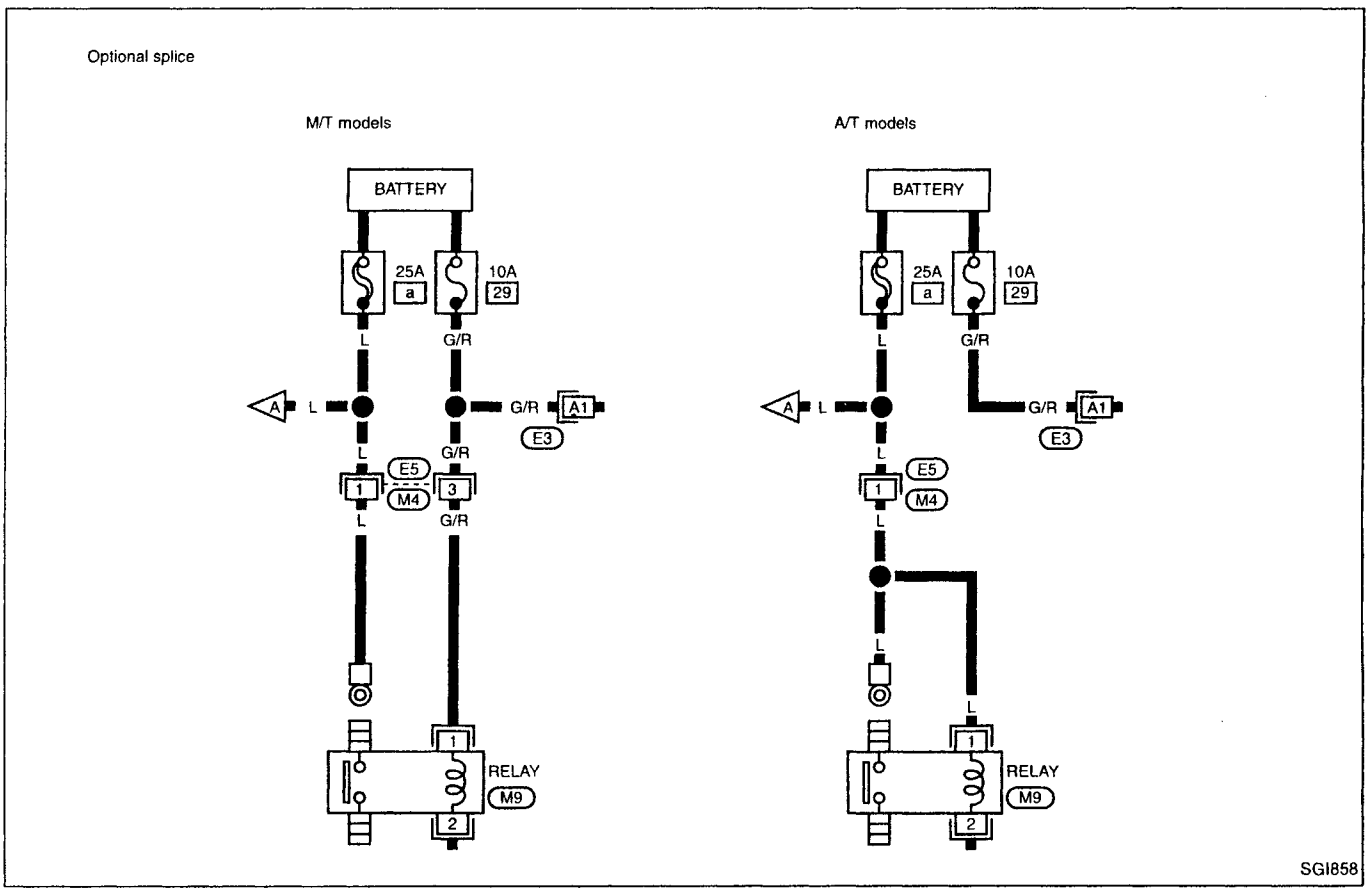

Simpo PDF Merge and Split Unregistered Version - http://www.simpopdf.com

Description

Number	Item	Description
①	Power condition	• This shows the condition when the system receives battery positive voltage (can be operated).
②	Fusible link	• The double line shows that this is a fusible link. • The open circle shows current flow in, and the shaded circle shows current flow out.
③	Fusible link/fuse location	• This shows the location of the fusible link or fuse in the fusible link or fuse box. For arrangement, refer to EL section ("POWER SUPPLY ROUTING").
④	Fuse	• The single line shows that this is a fuse. • The open circle shows current flow in, and the shaded circle shows current flow out.
⑤	Current rating	• This shows the current rating of the fusible link or fuse.
⑥	Connectors	• This shows that connector (E3) is female and connector (M1) is male. • The G/R wire is located in the A1 terminal of both connectors. • Terminal number with an alphabet (A1, B5, etc.) indicates that the connector is SMJ connector. Refer to GI-16.
⑦	Optional splice	• The open circle shows that the splice is optional depending on vehicle application.
⑧	Splice	• The shaded circle shows that the splice is always on the vehicle.
⑨	Page crossing	• This arrow shows that the circuit continues to an adjacent page. • The A will match with the A on the preceding or next page.
⑩	Common connector	• The dotted lines between terminals show that these terminals are part of the same connector.
⑪	Option abbreviation	• This shows that the circuit is optional depending on vehicle application.
⑫	Relay	• This shows an internal representation of the relay. For details, refer to EL section ("STANDARDIZED RELAY").
⑬	Connectors	• This shows that the connector is connected to the body or a terminal with bolt or nut.
⑭	Wire color	• This shows a code for the color of the wire. B = Black, BR = Brown W = White, OR = Orange R = Red, P = Pink G = Green, PU = Purple L = Blue, GY = Gray Y = Yellow, SB = Sky Blue LG = Light Green, CH = Dark Brown DG = Dark Green When the wire color is striped, the base color is given first, followed by the stripe color as shown below: Example: L/W = Blue with White Stripe
⑮	Option description	• This shows a description of the option abbreviation used on the page.
⑯	Switch	• This shows that continuity exists between terminals 1 and 2 when the switch is in the A position. Continuity exists between terminals 1 and 3 when the switch is in the B position.
⑰	Assembly parts	• Connector terminal in component shows that it is a harness incorporated assembly.
⑱	Cell code	• This identifies each page of the wiring diagram by section, system and wiring diagram page number.

Simpo PDF Merge and Split Unregistered Version - http://www.simpopdf.com

Description (Cont'd)

Number	Item	Description
⑲	Current flow arrow	• Arrow indicates electric current flow, especially where the direction of standard flow (vertically downward or horizontally from left to right) is difficult to follow. • A double arrow "◀▶" shows that current can flow in either direction depending on circuit operation.
⑳	System branch	• This shows that the system branches to another system identified by cell code (section and system).
㉑	Page crossing	• This arrow shows that the circuit continues to another page identified by cell code. • The C will match with the C on another page within the system other than the next or preceding pages.
㉒	Shielded line	• The line enclosed by broken line circle shows shield wire.
㉓	Component box in wave line	• This shows that another part of the component is also shown on another page (indicated by wave line) within the system.
㉔	Component name	• This shows the name of a component.
㉕	Connector number	• This shows the connector number. • The letter shows which harness the connector is located in. Example: **M**: main harness. For detail and to locate the connector, refer to EL section ("Main Harness", "HARNESS LAYOUT"). A coordinate grid is included for complex harnesses to aid in locating connectors.
㉖	Ground (GND)	• The line spliced and grounded under wire color shows that ground line is spliced at the grounded connector.
㉗	Ground (GND)	• This shows the ground connection.
㉘	Connector views	• This area shows the connector faces of the components in the wiring diagram on the page.
㉙	Common component	• Connectors enclosed in broken line show that these connectors belong to the same component.
㉚	Connector color	• This shows a code for the color of the connector. For code meaning, refer to wire color codes, Number ⑭ of this chart.
㉛	Fusible link and fuse box	• This shows the arrangement of fusible link(s) and fuse(s), used for connector views of "POWER SUPPLY ROUTING" in EL section. The open square shows current flow in, and the shaded square shows current flow out.
㉜	Reference area	• This shows that more information on the Super Multiple Junction (SMJ) and Joint Connectors (J/C) exists on the foldout page. Refer to GI-16 for details.

Simpo PDF Merge and Split Unregistered Version - http://www.simpopdf.com

Description (Cont'd)

CONNECTOR SYMBOLS

Most of connector symbols in wiring diagrams are shown from the terminal side.

- Connector symbols shown from the terminal side are enclosed by a single line.
- Connector symbols shown from the harness side are enclosed by a double line and followed by the direction mark 

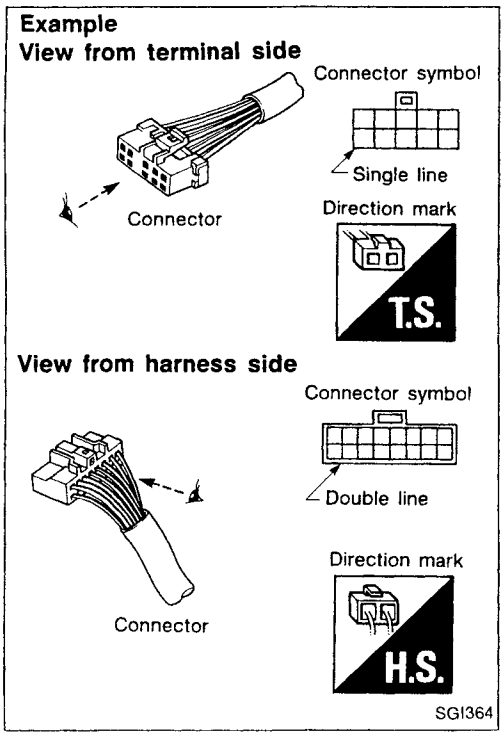

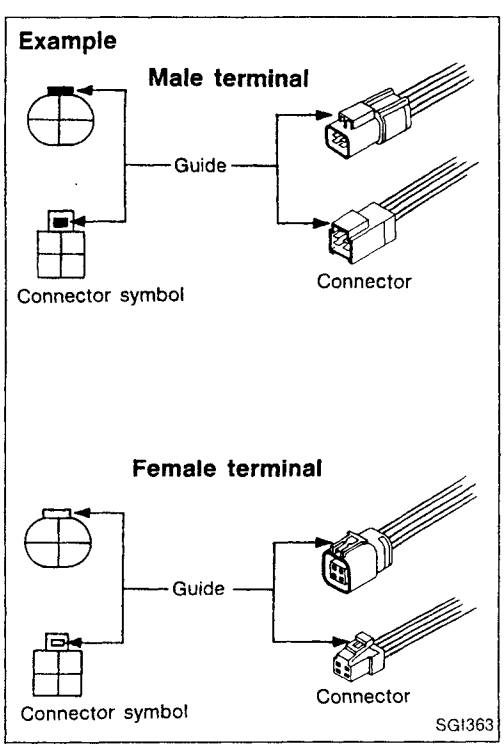

- Male and female terminals
  Connector guides for male terminals are shown in black and female terminals in white in wiring diagrams.

Simpo PDF Merge and Split Unregistered Version - http://www.simpopdf.com

Description (Cont'd)

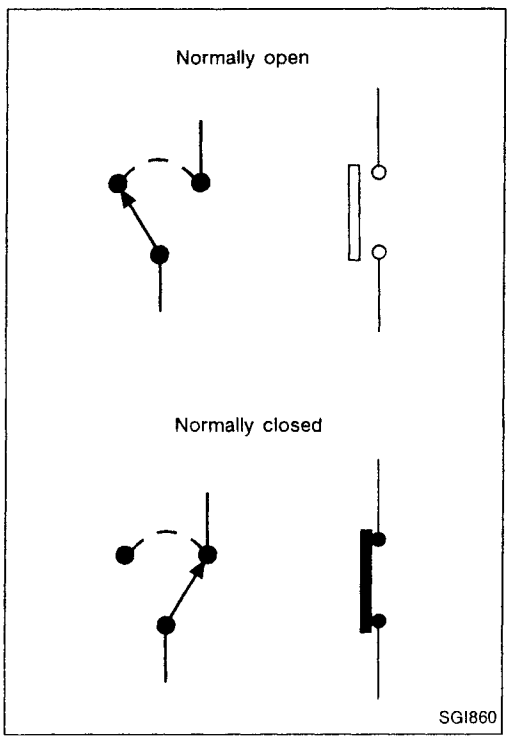

SWITCH POSITIONS

Switches are shown in wiring diagrams as if the vehicle is in the "normal" condition.

A vehicle is in the "normal" condition when:

- ignition switch is "OFF",
- doors, hood and trunk lid/back door are closed,
- pedals are not depressed, and
- parking brake is released.

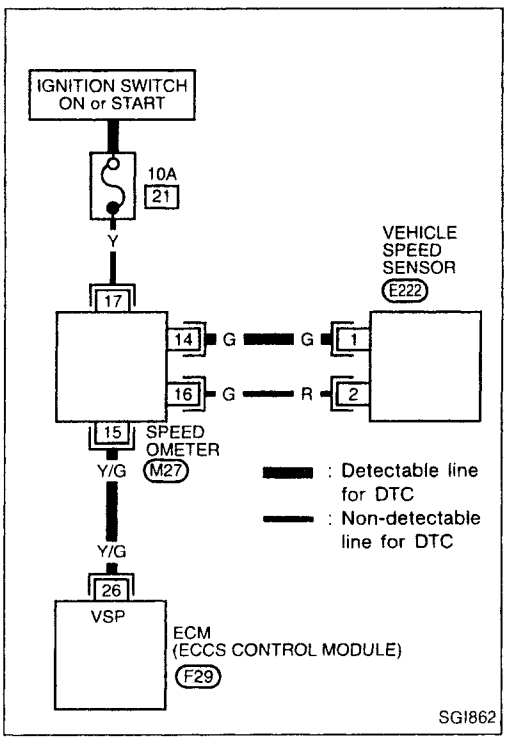

DETECTABLE LINES AND NON-DETECTABLE LINES

In some wiring diagrams, two kinds of lines, representing wires, with different weight are used.

- A line with regular weight (wider line) represents a "detectable line for DTC (Diagnostic Trouble Code)". A "detectable line for DTC" is a circuit in which ECM (ECCS control module) can detect its malfunctions with the on-board diagnostic system.
- A line with less weight (thinner line) represents a "non-detectable line for DTC". A "non-detectable line for DTC" is a circuit in which ECM cannot detect its malfunctions with the on-board diagnostic system.

Simpo PDF Merge and Split Unregistered Version - http://www.simpopdf.com

Description (Cont'd)

MULTIPLE SWITCH

The continuity of multiple switch is described in two ways as shown below.

- The switch chart is used in schematic diagrams.
- The switch diagram is used in wiring diagrams.

Example

(SWITCH CHART)

WIPER SWITCH

	OFF	INT	LO	HI	WASH
1					○
2				○	
3	○	○	○		
4	○	○			
5		○			
6		○	○	○	○

(SWITCH DIAGRAM)

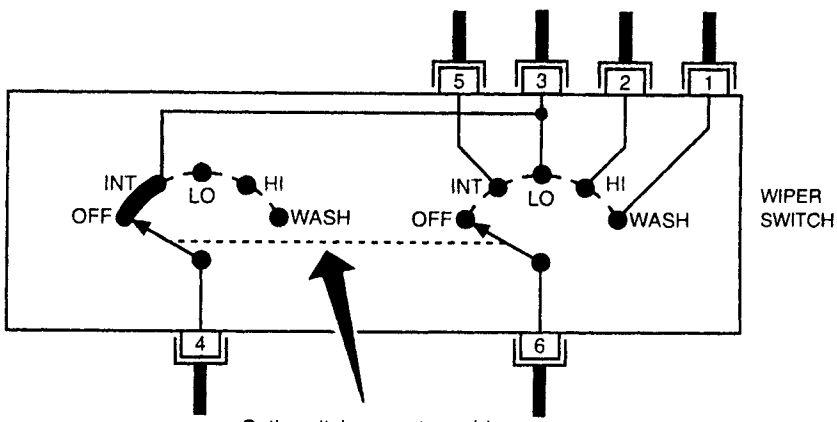

Continuity circuit of wiper switch

SWITCH POSITION	CONTINUITY CIRCUIT
OFF	3 - 4
INT	3 - 4, 5 - 6
LO	3 - 6
HI	2 - 6
WASH	1 - 6

SGI875

Simpo PDF Merge and Split Unregistered Version - http://www.simpopdf.com

Description (Cont'd)

FOLDOUT PAGE

The foldout page should be opened when reading wiring diagram.

Super multiple junction (SMJ)

In wiring diagram, connectors consisting of terminals having terminal numbers with an alphabet (B1, D0, etc.) are SMJ connectors.

If connector numbers are shown in Reference Area, these connector symbols are not shown in Connector Area. For terminal arrangement of these connectors, refer to the foldout page at the end of this manual.

Joint connector

Joint connector symbols are shown in Connector Area in the wiring diagram concerned. Foldout page also carries inside wiring layout together with such joint connector symbols.

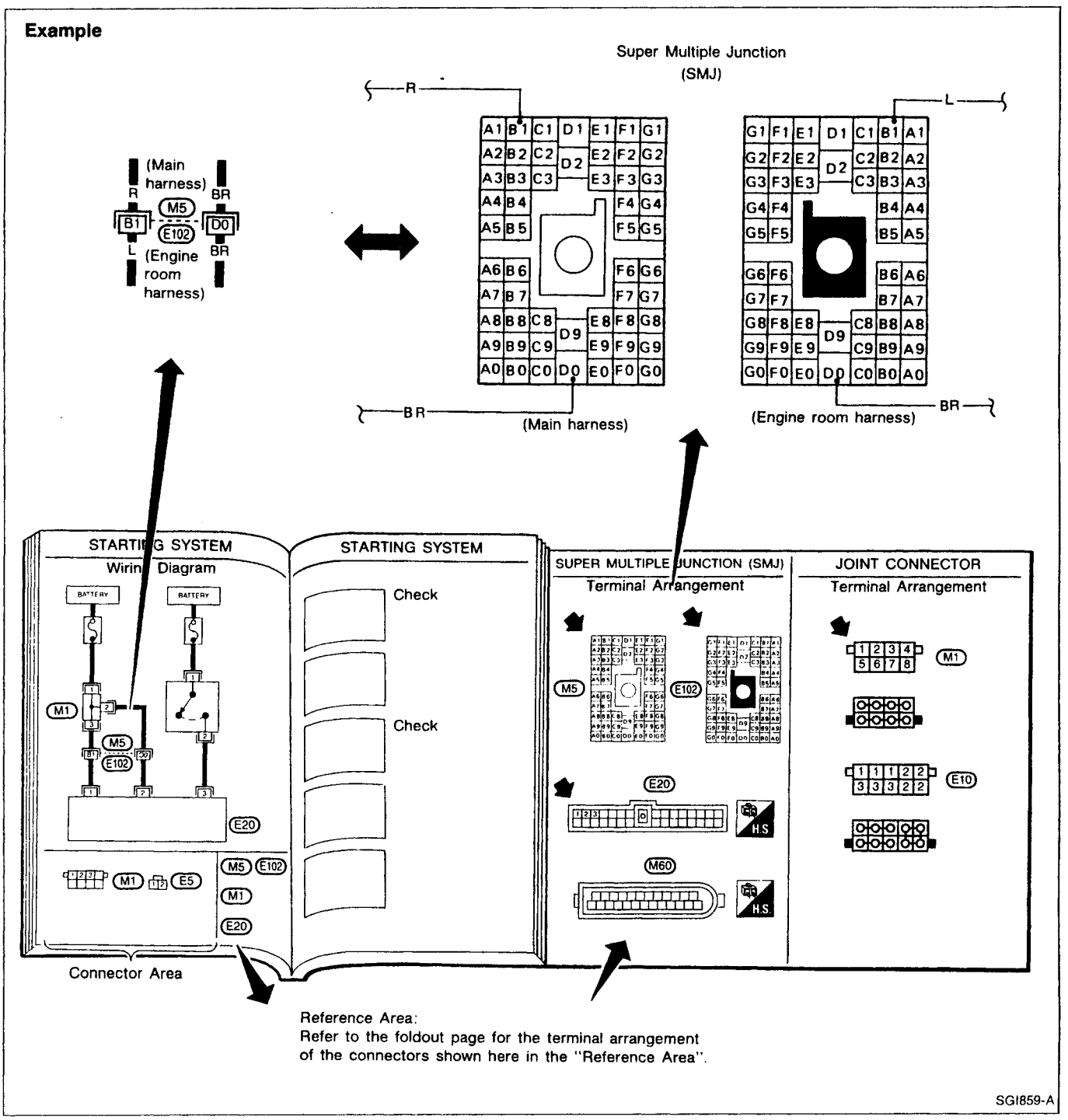

Simpo PDF Merge and Split Unregistered Version - http://www.simpopdf.com

Wiring Diagram Codes (Cell Codes)

Use the chart below to find out what each wiring diagram code stands for.

Code	Section	Wiring Diagram Name
AAC/V	EC	IACV-AAC Valve
ABS	BR	Anti-lock Brake System
A/C	HA	Manual Air Conditioner
A/CCUT	EC	Air Conditioner Cut Control
A/T	AT	Automatic Transmission
AIM	EL	Headlamp System
AIRREG	EC	IACV-Air Regulator
AT/C	EC	A/T Control
AUDIO	EL	Audio
BACK/L	EL	Back-up Lamp
CHARGE	EL	Charging System
CHIME	EL	Warning Chime
CMPS	EC	Camshaft Position Sensor
COOL/F	EC	Cooling Fan Control
DEF	EL	Rear Window Defogger
D/LOCK	EL	Power Door Lock
DTRL	EL	Headlamp — With Daytime Light System
ECTS	EC	Engine Coolant Temperature Sensor
EGRC/V	EC	EGR and canister Control Solenoid Valve
FCUT	EC	Fuel Cut Solenoid Valve
F/FOG	EL	Front Fog Lamp
FICD	EC	IACV-FICD Solenoid Valve
F/PUMP	EC	Fuel Pump
GLOW	EC	Quick-glow system
H/LAMP	EL	Headlamp — Without Daytime Light System
H/SEAT	EL	Heated Seat
HEAT	HA	Heater
HLC	EL	Headlamp Washer
HO2S	EC	Heated Oxygen Sensor
HORN	EL	Horn, Cigarette Lighter, Clock
IATS	EC	Intake Air Temperature Sensor
IGN/SG	EC	Ignition Signal
ILL	EL	Illumination
INJECT	EC	Injector
INT/L	EL	Interior, Spot and Trunk Room Lamps

Code	Section	Wiring Diagram Name
KS	EC	Knock Sensor
LKUP	EC	Torque Converter Clutch Solenoid Valve
LOAD	EC	Load Signal
MAFS	EC	Mass Air Flow Sensor
MAIN	EC	Main Power Supply and Ground Circuit
METER	EL	Speedometer, Tachometer, Temp. and Fuel Gauges
MIL	EC	MIL, Data Link Connector For CONSULT
MIRROR	EL	DOOR MIRROR
NATS	EL	NISSAN ANTI-THEFT SYSTEM
O2S	EC	OXYGEN SENSOR
PGC/V	EC	EVAP CANISTER PURGE CONTROL SOLENOID VALVE
PLA	EC	PARTIAL LOAD ADVANCE CONTROL
PNP/SW	EC	PARK/NEUTRAL POSITION SWITCH
POWER	EL	POWER SUPPLY ROUTING
PST/SW	EC	POWER STEERING OIL PRESSURE SWITCH
R/FOG	EL	REAR FOG LAMP
SROOF	EL	SUN ROOF
SRS	RS	SUPPLEMENTAL RESTRAINT SYSTEM
S/SIG	EC	START SIGNAL
START	EL	STARTING SYSTEM
STOP/L	EL	STOP LAMP
TAIL/L	EL	CLEARANCE, LICENSE, AND TAIL LAMPS
TPS	EC	THROTTLE POSITION SENSOR
TURN	EL	TURN SIGNAL AND HAZARD WARNING LAMPS
VSS	EC	VEHICLE SPEED SENSOR
VTC	EC	VTC SOLENOID VALVE
WARN	EL	WARNING LAMPS
WINDOW	EL	POWER WINDOW
WIPER	EL	FRONT WIPER AND WASHER
WIP/R	EL	REAR WIPER AND WASHER

Simpo PDF Merge and Split Unregistered Version - http://www.simpopdf.com

Work Flow

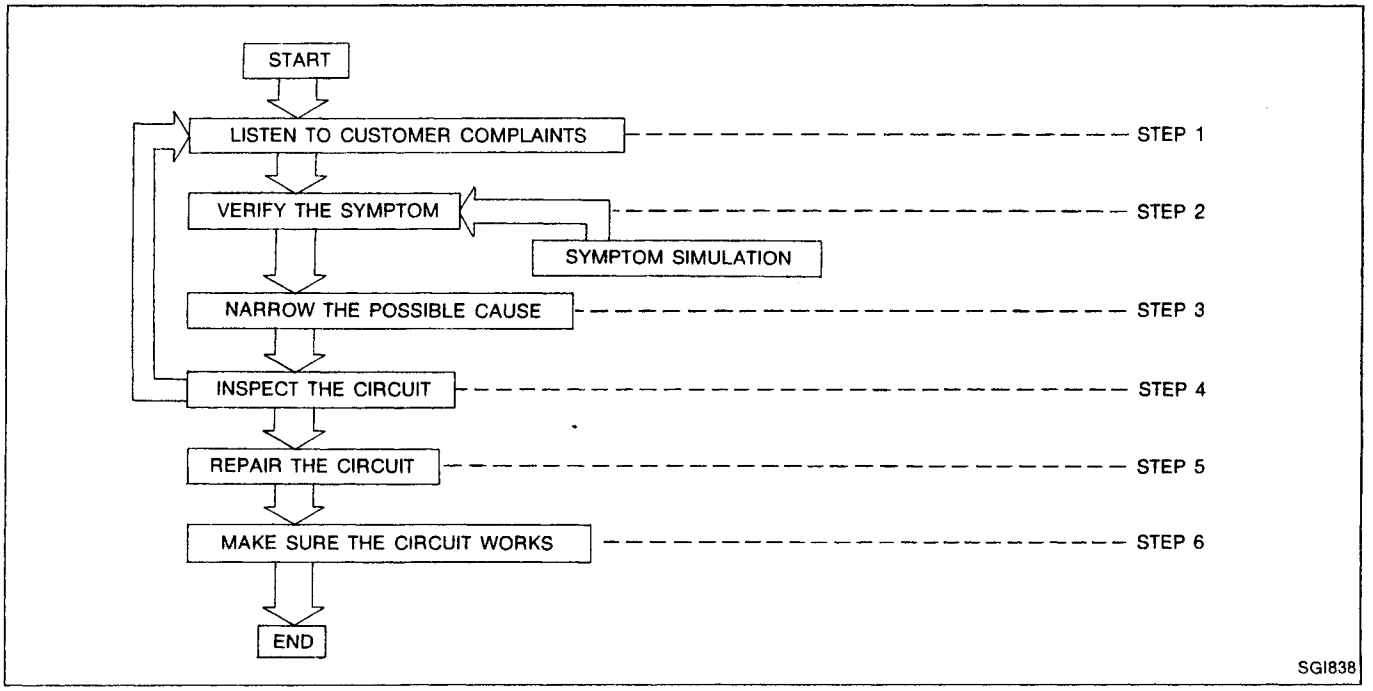

STEP	DESCRIPTION
STEP 1	Get detailed information about the conditions and the environment when the incident occurred. The following are key pieces of information required to make a good analysis: **WHAT** Vehicle Model, Engine, Transmission and the System (i.e. Radio). **WHEN** Date, Time of Day, Weather Conditions, Frequency. **WHERE** Road Conditions, Altitude and Traffic Situation. **HOW** System Symptoms, Operating Conditions (Other Components Interaction). Service History and if any After Market Accessories have been installed.
STEP 2	Operate the system, road test if necessary. Verify the parameter of the incident. If the problem can not be duplicated, refer to "Incident Simulation Tests" next page.
STEP 3	Get the proper diagnosis materials together including: POWER SUPPLY ROUTING System Operation Descriptions Applicable Service Manual Sections Identify where to begin diagnosis based upon your knowledge of the system operation and the customer comments.
STEP 4	Inspect the system for mechanical binding, loose connectors or wiring damage. Determine which circuits and components are involved and diagnose using the Power Supply Routing and Harness Layouts.
STEP 5	Repair or replace the incident circuit or component.
STEP 6	Operate the system in all modes. Verify the system works properly under all conditions. Make sure you have not inadvertently created a new incident during your diagnosis or repair steps.

Simpo PDF Merge and Split Unregistered Version - http://www.simpopdf.com

Incident Simulation Tests

INTRODUCTION

Sometimes the symptom is not present when the vehicle is brought in for service. If possible, re-create the conditions present at the time of the incident. Doing so may help avoid a No Trouble Found Diagnosis. The following section illustrates ways to simulate the conditions/environment under which the owner experiences an electrical incident.

The section is broken into the six following topics:

- Vehicle vibration
- Heat sensitive
- Freezing
- Water intrusion
- Electrical load
- Cold or hot start up

Get a thorough description of the incident from the customer. It is important for simulating the conditions of the problem.

VEHICLE VIBRATION

The problem may occur or become worse while driving on a rough road or when engine is vibrating (idle with A/C on). In such a case, you will want to check for a vibration related condition. Refer to the illustration below.

Connectors & harness

Determine which connectors and wiring harness would affect the electrical system you are inspecting. **Gently** shake each connector and harness while monitoring the system for the incident you are trying to duplicate. This test may indicate a loose or poor electrical connection.

Hint

Connectors can be exposed to moisture. It is possible to get a thin film of corrosion on the connector terminals. A visual inspection may not reveal this without disconnecting the connector. If the problem occurs intermittently, perhaps the problem is caused by corrosion. It is a good idea to disconnect, inspect and clean the terminals on related connectors in the system.

Sensors & relays

Gently apply a slight vibration to sensors and relays in the system you are inspecting.
This test may indicate a loose or poorly mounted sensor or relay.

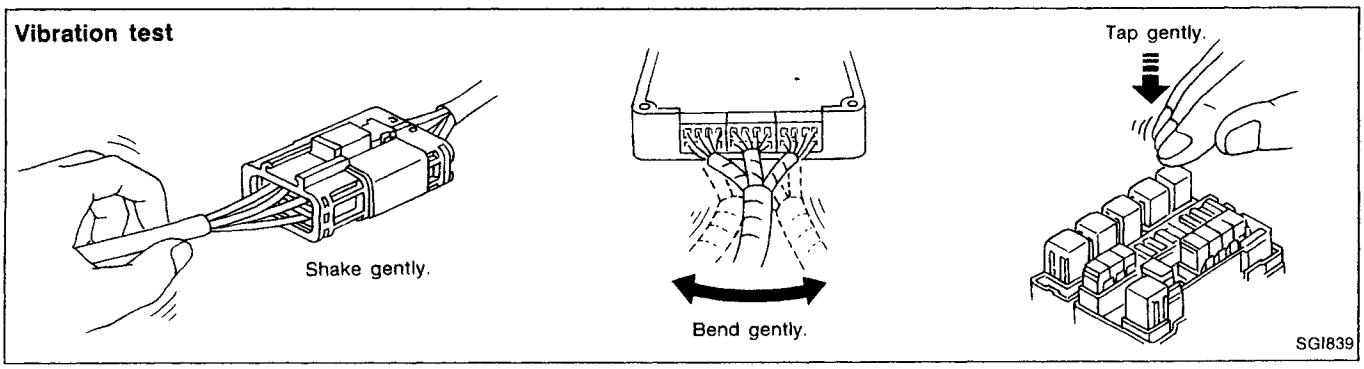

Simpo PDF Merge and Split Unregistered Version - http://www.simpopdf.com

Incident Simulation Tests (Cont'd)

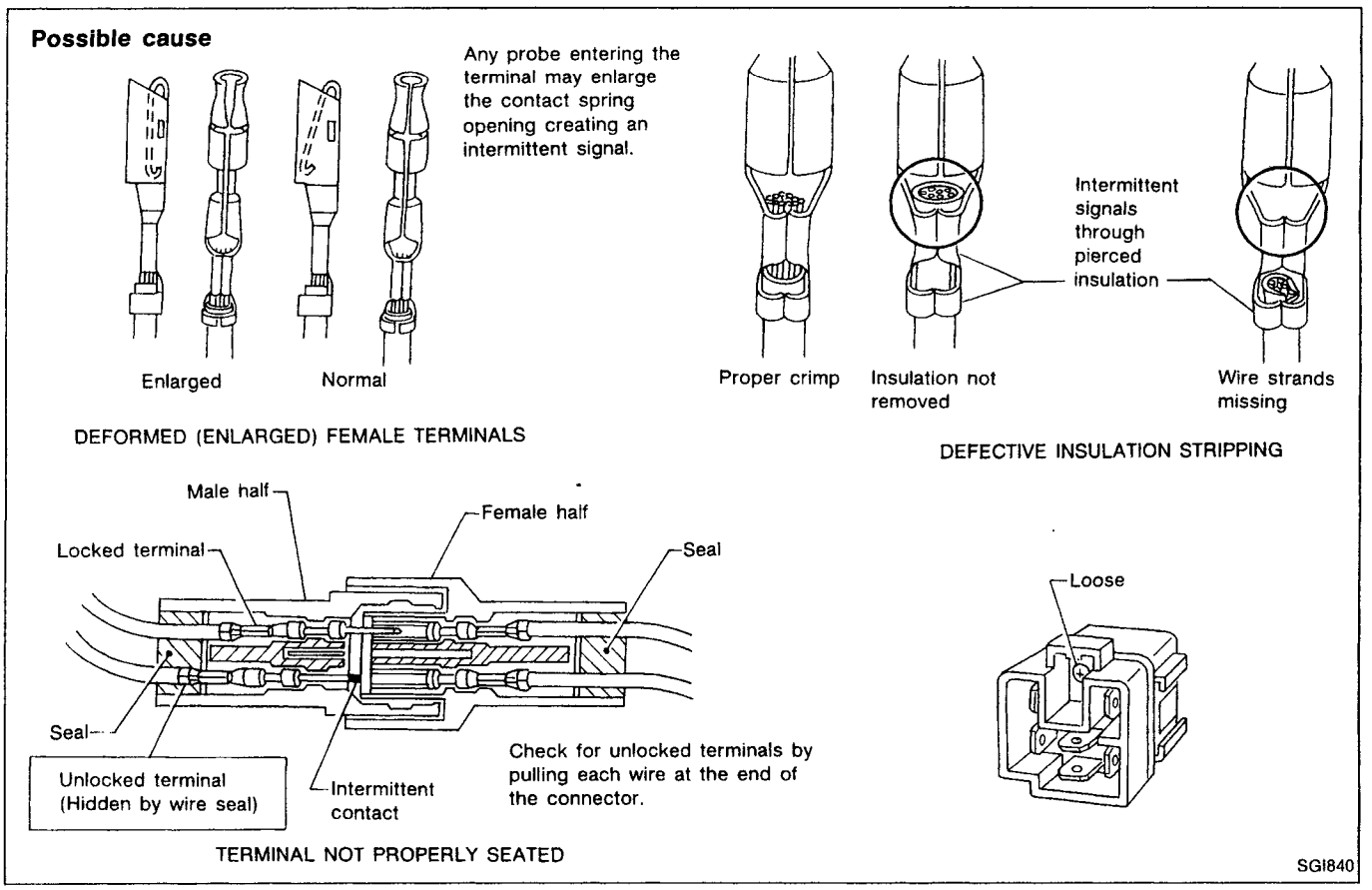

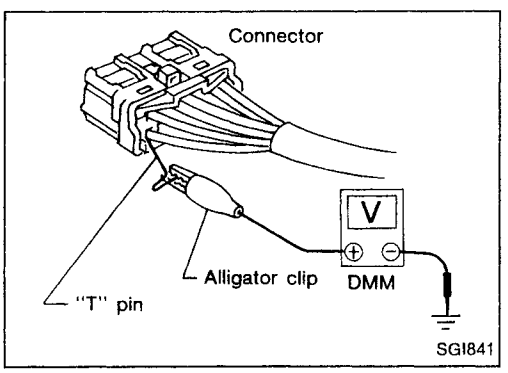

Tester probe

When probing a connector it is possible to enlarge the contact spring opening. If this occurs it may create an intermittent signal in the circuit. When probing a connector, use care not to enlarge the opening. The probe of the Digital Multimeter (DMM) may not fit into the connector cavity. In such cases make an extension of a "T" pin and probe it from the harness side of the connector. Most DMMs have accessory alligator clips. Slide these over the probe to allow clipping the "T" pin for a better contact. If you have any difficulty probing a terminal, inspect the terminal. Ensure you have not accidentally opened the contact spring or pulled a wire loose.

Simpo PDF Merge and Split Unregistered Version - http://www.simpopdf.com

Incident Simulation Tests (Cont'd)

Engine compartment

There are several reasons a vehicle or engine vibration could cause an electrical complaint. Some of the things to check for are:

- Connectors not fully seated.
- Wiring harness not long enough and is being stressed due to engine vibrations or rocking.
- Wires laying across brackets or moving components.
- Loose, dirty or corroded ground wires.
- Wires routed too close to hot components.

To inspect components under the hood, start by verifying the integrity of ground connections. (Refer to GROUND INSPECTION described later.) First check that the system is properly grounded. Then check for loose connection by **gently shaking** the wiring or components as previously explained. Using the wiring diagrams inspect the wiring for continuity.

Behind the instrument panel

An improperly routed or improperly clamped harness can become pinched during accessory installation. Vehicle vibration can aggravate a harness which is routed along a bracket or near a screw.

Under seating areas

An unclamped or loose harness can cause wiring to be pinched by seat components (such as slide guides) during vehicle vibration. If the wiring runs under seating areas, inspect wire routing for possible damage or pinching.

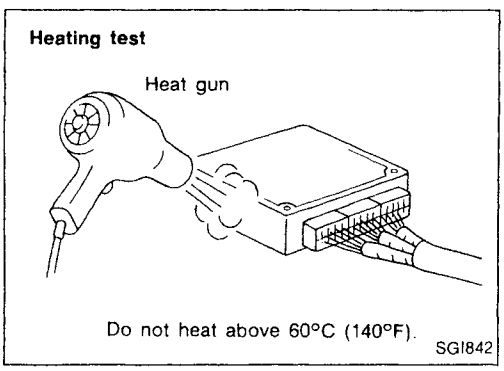

HEAT SENSITIVE

The owner's problem may occur during hot weather or after car has sat for a short time. In such cases you will want to check for a heat sensitive condition.
To determine if an electrical component is heat sensitive, heat the component with a heat gun or equivalent.
Do not heat components above 60°C (140°F). If incident occurs while heating the unit, either replace or properly insulate the component.

Simpo PDF Merge and Split Unregistered Version - http://www.simpopdf.com

Incident Simulation Tests (Cont'd)

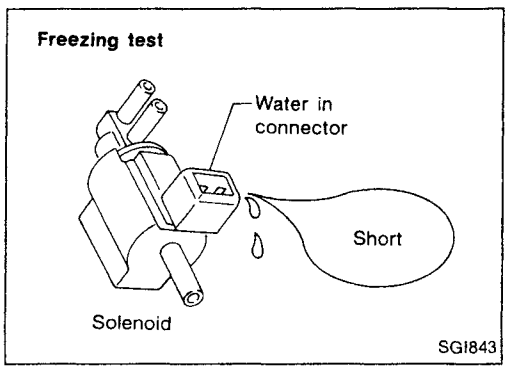

FREEZING

The customer may indicate the incident goes away after the car warms up (winter time). The cause could be related to water freezing somewhere in the wiring/electrical system.
There are two methods to check for this. The first is to arrange for the owner to leave his car overnight. Make sure it will get cold enough to demonstrate his complaint. Leave the car parked outside overnight. In the morning, do a quick and thorough diagnosis of those electrical components which could be affected.
The second method is to put the suspect component into a freezer long enough for any water to freeze. Reinstall the part into the car and check for the reoccurrence of the incident. If it occurs, repair or replace the component.

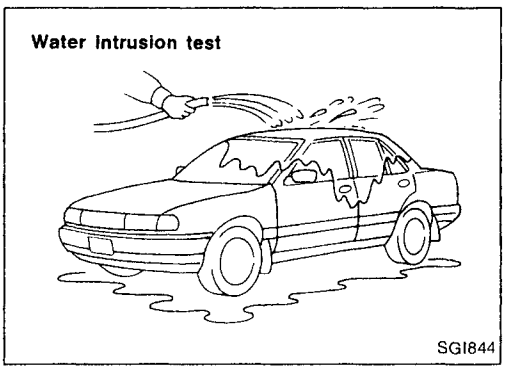

WATER INTRUSION

The incident may occur only during high humidity or in rainy/snowy weather. In such cases the incident could be caused by water intrusion on an electrical part. This can be simulated by soaking the car or running it through a car wash.
Do not spray water directly on any electrical components.

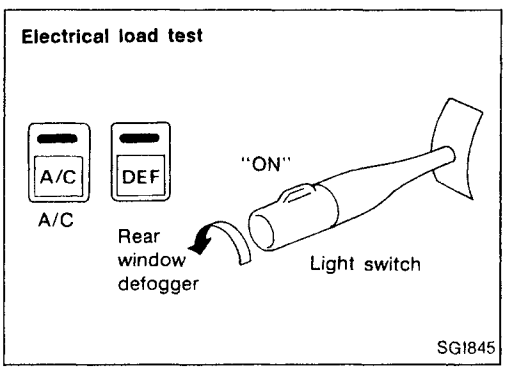

ELECTRICAL LOAD

The incident may be electrical load sensitive. Perform diagnosis with all accessories (including A/C, rear window defogger, radio, fog lamps) turned on.

COLD OR HOT START UP

On some occasions an electrical incident may occur only when the car is started cold. Or it may occur when the car is restarted hot shortly after being turned off. In these cases you may have to keep the car overnight to make a proper diagnosis.

Simple PDF Merge and Split Unregistered Version - http://www.simplepdf.com

Circuit Inspection

INTRODUCTION

In general, testing electrical circuits is an easy task if it is approached in a logical and organized method. Before beginning it is important to have all available information on the system to be tested. Also, get a thorough understanding of system operation. Then you will be able to use the appropriate equipment and follow the correct test procedure.
You may have to simulate vehicle vibrations while testing electrical components. **Gently shake** the wiring harness or electrical component to do this.

OPEN	A circuit is open when there is no continuity through a section of the circuit.
SHORT	There are two types of shorts.
• SHORT CIRCUIT	When a circuit contacts another circuit and causes the normal resistance to change.
• SHORT TO GROUND	When a circuit contacts a ground source and grounds the circuit.

TESTING FOR "OPENS" IN THE CIRCUIT

Before you begin to diagnose and test the system, you should rough sketch a schematic of the system. This will help you to logically walk through the diagnosis process. Drawing the sketch will also reinforce your working knowledge of the system.

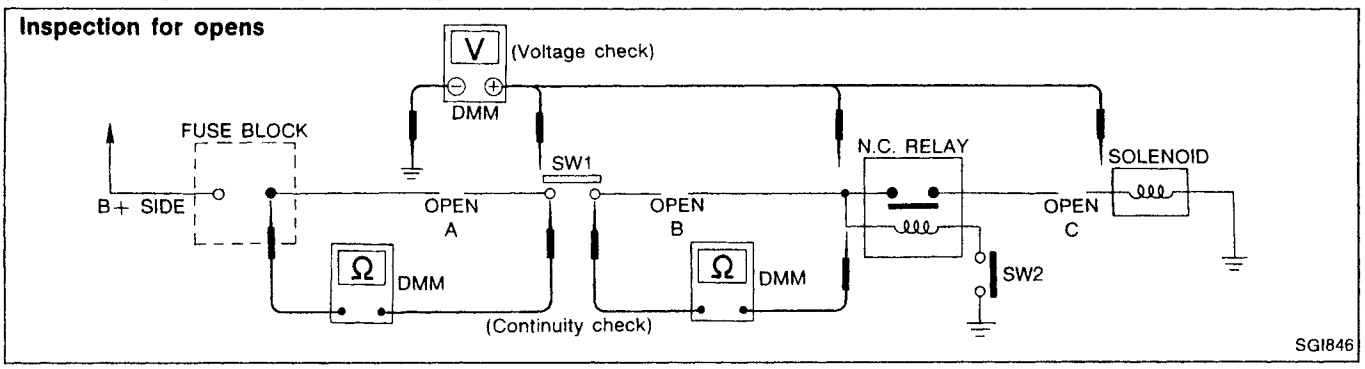

Continuity check method

The continuity check is used to find an open in the circuit. The Digital Multimeter (DMM) set on the resistance function will indicate an open circuit as over limit (OL, no beep tone or no ohms symbol). Make sure to always start with the DMM at the highest resistance level.
To help in understanding the diagnosis of open circuits please refer to the schematic above.

1. Disconnect the battery negative cable.
2. Start at one end of the circuit and work your way to the other end. (At the fuse block in this example)
3. Connect one probe of the DMM to the fuse block terminal on the load side.
4. Connect the other probe to the fuse block (power) side of SW1. Little or no resistance will indicate that portion of the circuit has good continuity. If there were an open in the circuit, the DMM would indicate an over limit or infinite resistance condition. (point A)
5. Connect the probes between SW1 and the relay. Little or no resistance will indicate that portion of the circuit has good continuity. If there were an open in the circuit, the DMM would indicate an over limit or infinite resistance condition. (point B)
6. Connect the probes between the relay and the solenoid. Little or no resistance will indicate that portion of the circuit has good continuity. If there were an open in the circuit, the DMM would indicate an over limit or infinite resistance condition. (point C)

Any circuit can be diagnosed using the approach in the above example.

Simpo PDF Merge and Split Unregistered Version - http://www.simpopdf.com

Circuit Inspection (Cont'd)

Voltage check method

To help in understanding the diagnosis of open circuits please refer to the previous schematic.
In any powered circuit, an open can be found by methodically checking the system for the presence of voltage. This is done by switching the DMM to the voltage function.

1. Connect one probe of the DMM to a known good ground.
2. Begin probing at one end of the circuit and work your way to the other end.
3. With SW1 open, probe at SW1 to check for voltage.
   voltage; open is further down the circuit than SW1.
   no voltage; open is between fuse block and SW1 (point A).
4. Close SW1 and probe at relay.
   voltage; open is further down the circuit than the relay.
   no voltage; open is between SW1 and relay (point B).
5. Close the relay and probe at the solenoid.
   voltage; open is further down the circuit than the solenoid.
   no voltage; open is between relay and solenoid (point C).

Any powered circuit can be diagnosed using the approach in the above example.

TESTING FOR "SHORTS" IN THE CIRCUIT

To simplify the discussion of shorts in the system please refer to the schematic below.

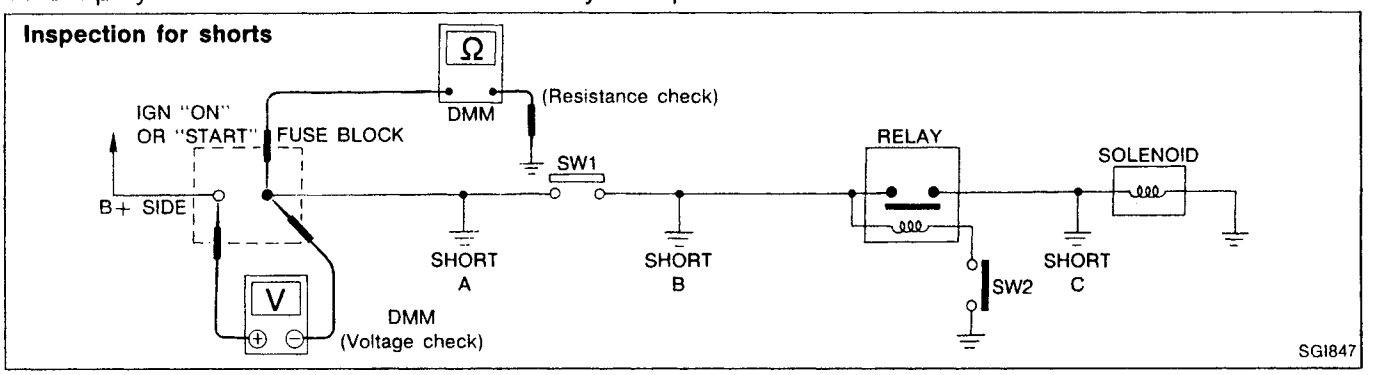

Resistance check method

1. Disconnect the battery negative cable and remove the blown fuse.
2. Disconnect all loads (SW1 open, relay disconnected and solenoid disconnected) powered through the fuse.
3. Connect one probe of the ohmmeter to the load side of the fuse terminal. Connect the other probe to a known good ground.
4. With SW1 open, check for continuity.
   continuity; short is between fuse terminal and SW1 (point A).
   no continuity; short is further down the circuit than SW1.
5. Close SW1 and disconnect the relay. Put probes at the load side of fuse terminal and a known good ground. Then, check for continuity.
   continuity; short is between SW1 and the relay (point B).
   no continuity; short is further down the circuit than the relay.
6. Close SW1 and jump the relay contacts with jumper wire. Put probes at the load side of fuse terminal and a known good ground. Then, check for continuity.
   continuity; short is between relay and solenoid (point C).
   no continuity; check solenoid, retrace steps.

Simpo PDF Merge and Split Unregistered Version - http://www.simpopdf.com

Circuit Inspection (Cont'd)

Voltage check method

1. Remove the blown fuse and disconnect all loads (i.e. SW1 open, relay disconnected and solenoid disconnected) powered through the fuse.
2. Turn the ignition key to the ON or START position. Verify battery voltage at the B + side of the fuse terminal (one lead on the B + terminal side of the fuse block and one lead on a known good ground).
3. With SW1 open and the DMM leads across both fuse terminals, check for voltage.
   voltage; short is between fuse block and SW1 (point A).
   no voltage; short is further down the circuit than SW1.
4. With SW1 closed, relay and solenoid disconnected and the DMM leads across both fuse terminals, check for voltage.
   voltage; short is between SW1 and the relay (point B).
   no voltage; short is further down the circuit than the relay.
5. With SW1 closed, relay contacts jumped with fused jumper wire check for voltage.
   voltage; short is down the circuit of the relay or between the relay and the disconnected solenoid (point C).
   no voltage; retrace steps and check power to fuse block.

GROUND INSPECTION

Ground connections are very important to the proper operation of electrical and electronic circuits. Ground connections are often exposed to moisture, dirt and other corrosive elements. The corrosion (rust) can become an unwanted resistance. This unwanted resistance can change the way a circuit works.

Electronically controlled circuits are very sensitive to proper grounding. A loose or corroded ground can drastically affect an electronically controlled circuit. A poor or corroded ground can easily affect the circuit. Even when the ground connection looks clean, there can be a thin film of rust on the surface.

When inspecting a ground connection follow these rules:

1. Remove the ground bolt screw or clip.
2. Inspect all mating surfaces for tarnish, dirt, rust, etc.
3. Clean as required to assure good contact.
4. Reinstall bolt or screw securely.
5. Inspect for "add-on" accessories which may be interfering with the ground circuit.
6. If several wires are crimped into one ground eyelet terminal, check for proper crimps. Make sure all of the wires are clean, securely fastened and providing a good ground path. If multiple wires are cased in one eyelet make sure no ground wires have excess wire insulation.

Ground Inspection

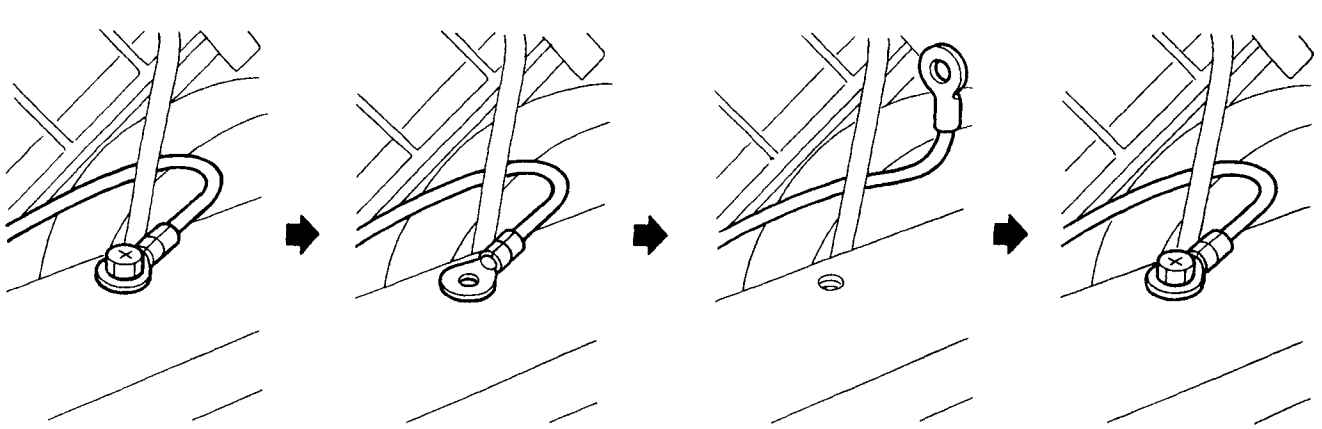

Simpo PDF Merge and Split Unregistered Version - http://www.simpopdf.com

Circuit Inspection (Cont'd)

VOLTAGE DROP TESTS

Voltage drop tests are often used to find components or circuits which have excessive resistance. A voltage drop in a circuit is caused by a resistance **when the circuit is in operation**.
Check the wire in the illustration. When measuring resistance with ohmmeter, contact by a single strand of wire will give reading of 0 ohms. This would indicate a good circuit. When the circuit operates, this single strand of wire is not able to carry the current. The single strand will have a high resistance to the current. This will be picked up as a slight voltage drop.
Unwanted resistance can be caused by many situations as follows:

- Undersized wiring (single strand example)
- Corrosion on switch contacts
- Loose wire connections or splices.

If repairs are needed always use wire that is of the same or larger gauge.

Measuring voltage drop — Accumulated method

1. Connect the voltmeter across the connector or part of the circuit you want to check. The positive lead of the voltmeter should be closer to power and the negative lead closer to ground.
2. Operate the circuit.
3. The voltmeter will indicate how many volts are being used to "push" current through that part of the circuit.

Note in the illustration that there is an excessive 4.1 volt drop between the battery and the bulb.

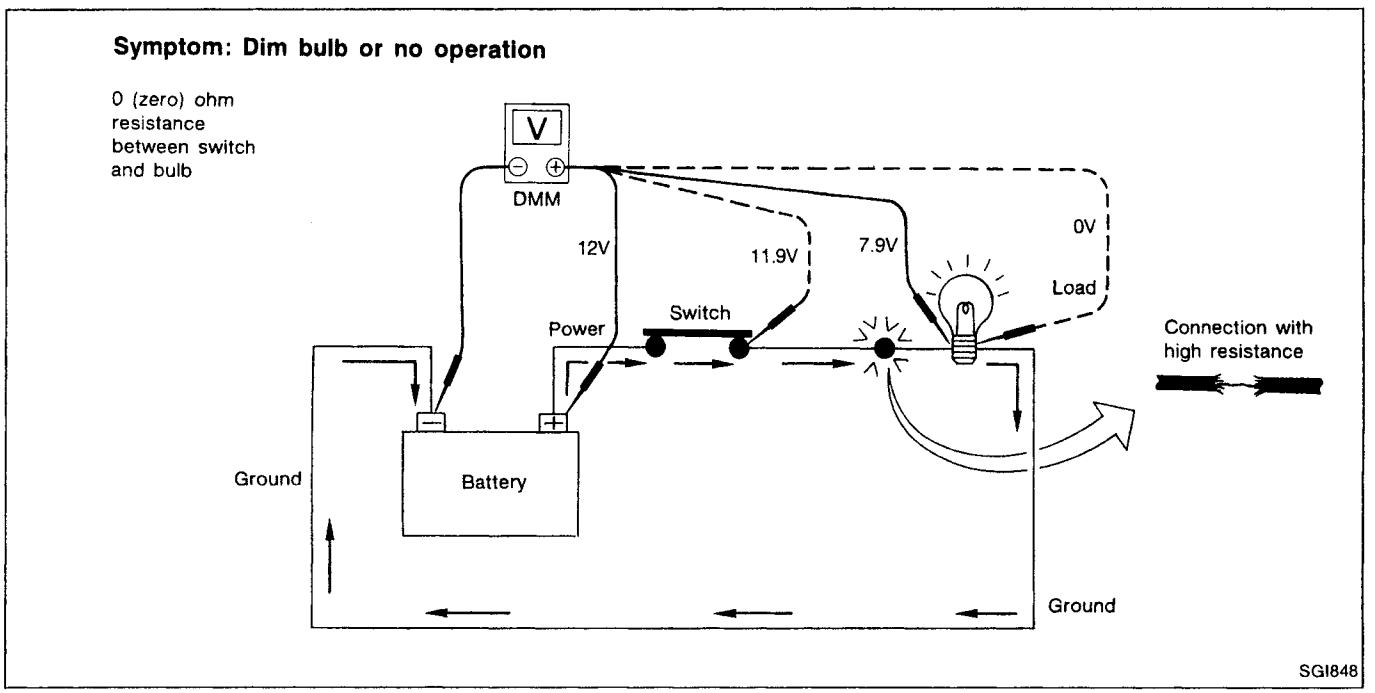

Measuring voltage drop — Step by step

The step by step method is most useful for isolating excessive drops in low voltage systems (such as those in "Computer Controlled Systems").
Circuits in the "Computer Controlled System" operate on very low amperage.
The (Computer Controlled) system operations can be adversely affected by any variation in resistance in the system. Such resistance variation may be caused by poor connection, improper installation, improper wire gauge or corrosion.
The step by step voltage drop test can identify a component or wire with too much resistance.

Simpo PDF Merge and Split Unregistered Version - http://www.simpopdf.com

Circuit Inspection (Cont'd)

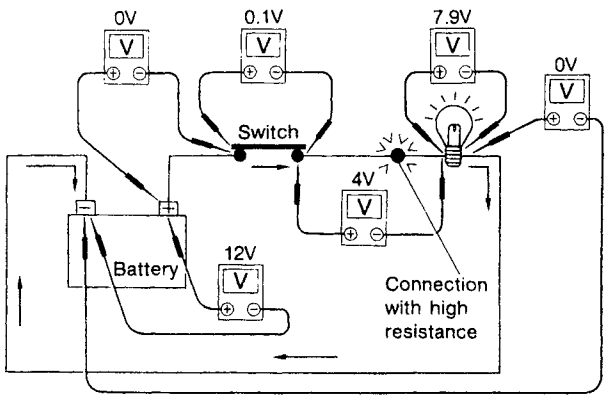

1. Connect the voltmeter as shown, starting at the battery and working your way around the circuit.
2. An unusually large voltage drop will indicate a component or wire that needs to be repaired. As you can see the illustration above, the poor connection causes a 4 volt drop.

The chart that follows illustrates some maximum allowable voltage drops. These values are given as a guideline, the exact value for each component may vary.

COMPONENT	VOLTAGE DROP
Wire	negligible <.001 volts
Ground Connections	Approx. 0.1 volts
Switch Contacts	Approx. 0.3 volts

SGI854

Simpo PDF Merge and Split Unregistered Version - http://www.simpopdf.com

Circuit Inspection (Cont'd)

Relationship between open/short (high resistance) circuit and the ECM pin control

System Description: When the switch is ON, the ECM lights up the lamp.

Case 1

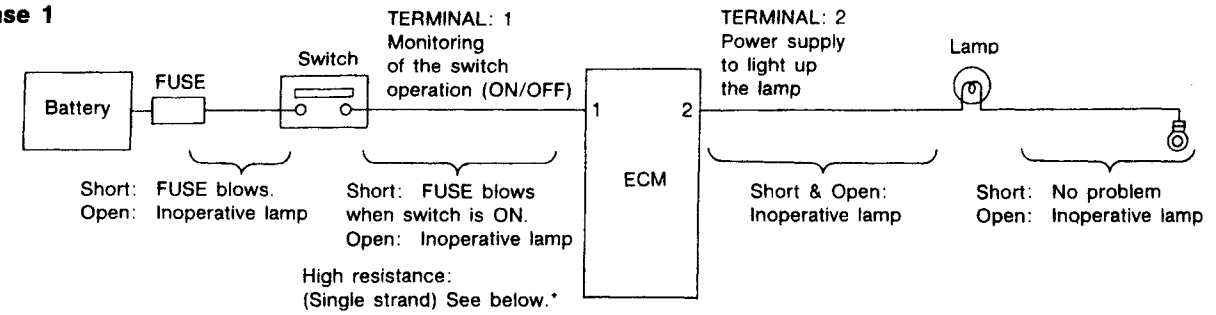

Input-output voltage chart

Pin No.	Item	Condition	Voltage value [V]	In case of high resistance such as single strand [V] *
1	Switch	Switch ON	Battery voltage	Lower than battery voltage Approx. 8 (Example)
		OFF	Approx. 0	Approx. 0
2	Lamp	Switch ON	Battery voltage	Approx. 0 (Inoperative lamp)
		OFF	Approx. 0	Approx. 0

The voltage value is based on the body ground.

* : If high resistance exists in the switch side circuit (caused by a single strand), terminal 1 does not detect battery voltage. ECM does not detect the switch is ON even if the switch does turn ON. Therefore, the ECM does not supply power to light up the lamp.

Case 2

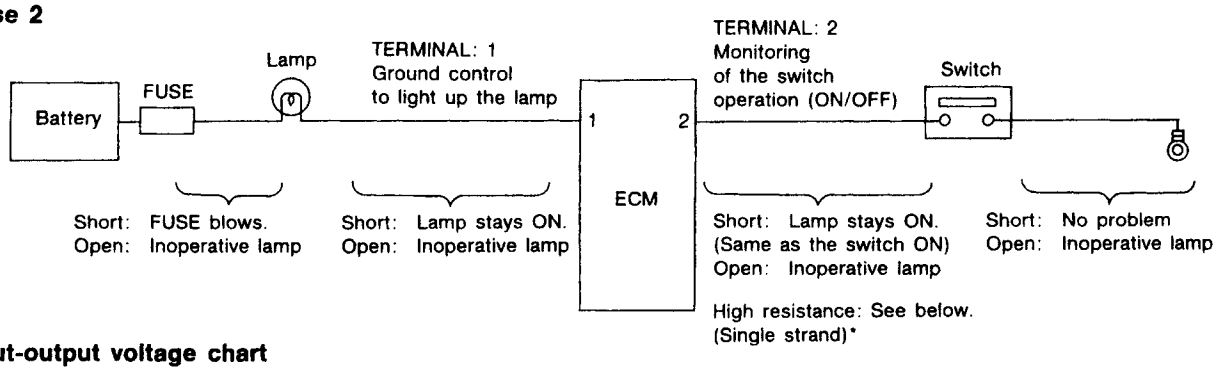

Input-output voltage chart

Pin No.	Item	Condition	Voltage value [V]	In case of high resistance such as single strand [V] *
1	Lamp	Switch ON	Approx. 0	Battery voltage (Inoperative lamp)
		OFF	Battery voltage	Battery voltage
2	Switch	Switch ON	Approx. 0	Higher than 0 Approx. 4 (Example)
		OFF	Approx. 5	Approx. 5

The voltage value is based on the body ground.

* : If high resistance exists in the switch side circuit (caused by a single strand), terminal 2 does not detect approx. 0V. ECM does not detect the switch is ON even if the switch does turn ON. Therefore, the ECM does not control ground to light up the lamp.

SGI849-A

Simpo PDF Merge and Split Unregistered Version - http://www.simpopdf.com

NOTICE

The flow chart indicates work procedures required to diagnose problems effectively. Observe the following instructions before diagnosing.

1) **Use the flow chart after locating probable causes of a problem following the "Preliminary Check", the "Symptom Chart" or the "Work Flow".**
2) **After repairs, re-check that the problem has been completely eliminated.**
3) **Refer to Component Parts and Harness Connector Location for the Systems described in each section for identification/ location of components and harness connectors.**
4) **Refer to the Circuit Diagram for Quick Pinpoint Check. If you must check circuit continuity between harness connectors in more detail, such as when a sub-harness is used, refer to Wiring Diagram in each individual section and Harness Layout in EL section for identification of harness connectors.**
5) **When checking circuit continuity, ignition switch should be "OFF".**
6) **Before checking voltage at connectors, check battery voltage.**
7) **After accomplishing the Diagnostic Procedures and Electrical Components Inspection, make sure that all harness connectors are reconnected as they were.**

Example

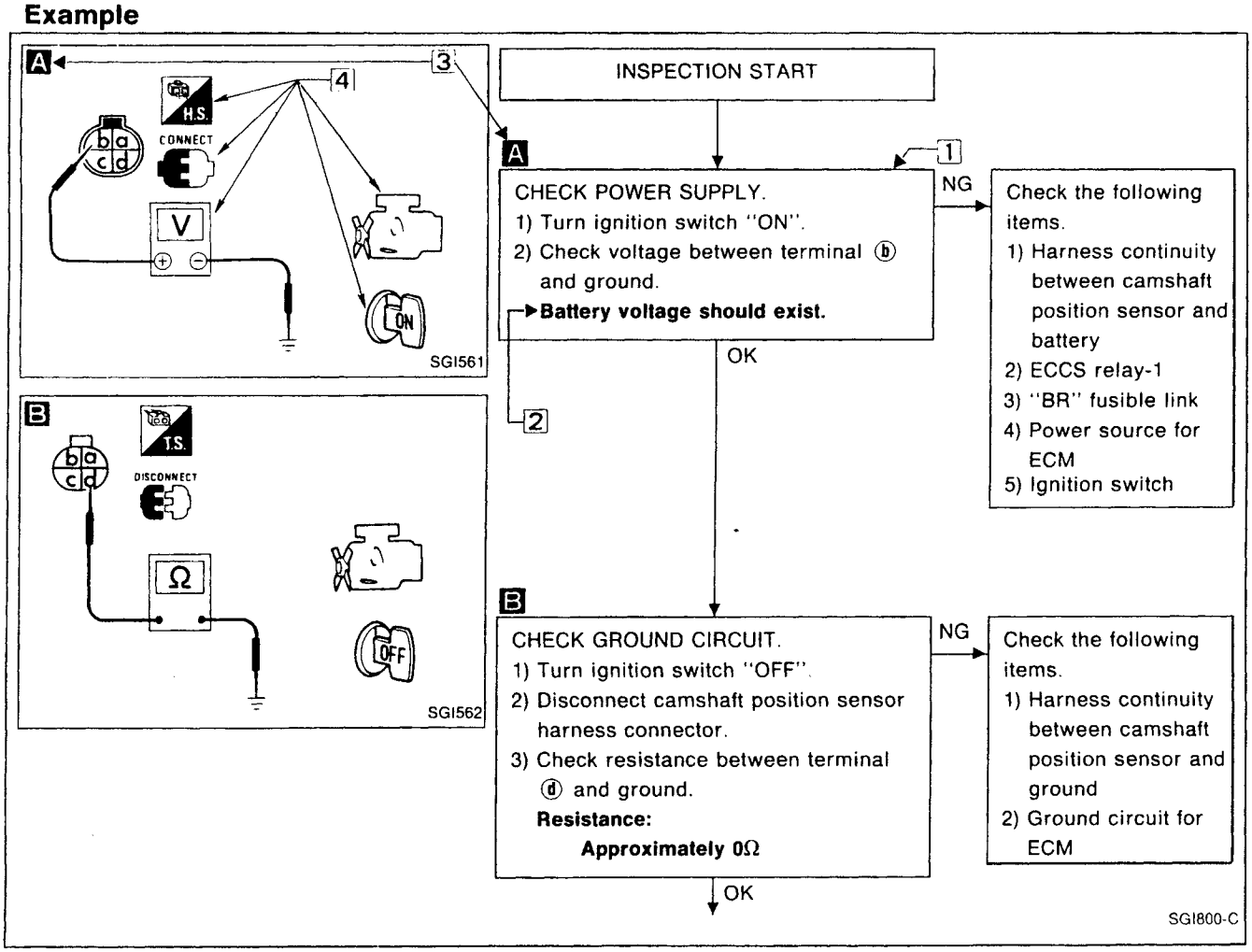

Simpo PDF Merge and Split Unregistered Version - http://www.simopdf.com

HOW TO FOLLOW THIS FLOW CHART

1 Work and diagnostic procedure

Start to diagnose a problem using procedures indicated in enclosed blocks, as shown in the following example.

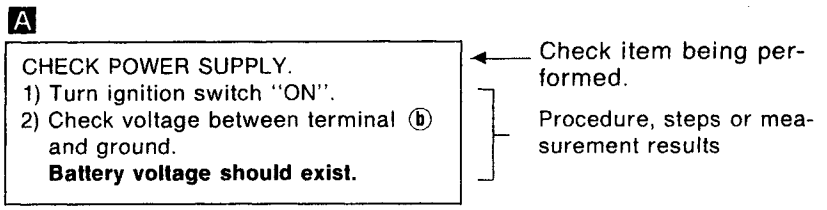

2 Measurement results

Required results are indicated in bold type in the corresponding block, as shown below:

These have the following meanings:

Battery voltage → 11 - 14V or approximately 12V
Voltage: Approximately 0V → Less than 1V

3 Cross reference of work symbols in the text and illustrations

Illustrations are provided as visual aids for work procedures. For example, symbol A indicated in the left upper portion of each illustration corresponds with the symbol in the flow chart for easy identification. More precisely, the procedure under the "CHECK POWER SUPPLY" outlined previously is indicated by an illustration A .

4 Symbols used in illustrations

Symbols included in illustrations refer to measurements or procedures. Before diagnosing a problem, familiarize yourself with each symbol.

Direction mark

Refer to "CONNECTOR SYMBOLS" on GI-13.

Simpo PDF Merge and Split Unregistered Version - http://www.simpopdf.com

Key to symbols signifying measurements or procedures

Symbol	Symbol explanation	Symbol	Symbol explanation
	Check after disconnecting the connector to be measured.		Current should be measured with an ammeter.
	Check after connecting the connector to be measured.		Procedure with CONSULT
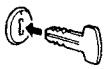	Insert key into ignition switch.		Procedure without CONSULT
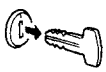	Remove key from ignition switch.		A/C switch is "OFF".
	Turn ignition switch to "OFF" position.		A/C switch is "ON".
	Turn ignition switch to "ON" position.		Fan switch is "ON". (At any position except for "OFF" position)
	Turn ignition switch to "START" position.		Fan switch is "OFF".
	Turn ignition switch from "OFF" to "ACC" position.	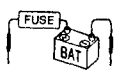	Apply positive voltage from battery with fuse directly to components.
	Turn ignition switch from "ACC" to "OFF" position.	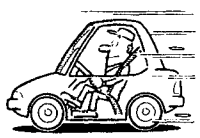	Drive vehicle.
	Turn ignition switch from "OFF" to "ON" position.		Disconnect battery negative cable.
	Turn ignition switch from "ON" to "OFF" position.		Depress brake pedal.
	Do not start engine, or check with engine stopped.		Release brake pedal.
	Start engine, or check with engine running.		Depress accelerator pedal.
	Apply parking brake.		Release accelerator pedal.
	Release parking brake.	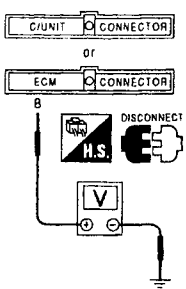	Pin terminal check for SMJ type ECM and A/T control unit connectors. **For details regarding the terminal arrangement, refer to the foldout page.** 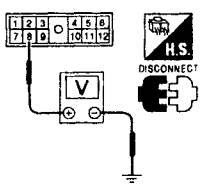
	Check after engine is warmed up sufficiently.		
	Voltage should be measured with a voltmeter.		
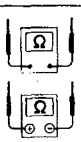	Circuit resistance should be measured with an ohmmeter.		

Simpo PDF Merge and Split Unregistered Version - http://www.simpopdf.com

Function and System Application

Diagnostic test mode	Function	ECCS	Air bag	ABS	NATS*1
Work support	This mode enables a technician to adjust some devices faster and more accurately by following the indications on CONSULT.	×	—	—	—
Self-diagnostic results	Self-diagnostic results can be read and erased quickly.	×	×	×	×
ECU discriminated No.	Classification number of a replacement ECU can be read to prevent an incorrect ECU from being installed.	—	×	—	—
Data monitor	Input/Output data in the ECM can be read.	×	—	×	—
Active test	Diagnostic Test Mode in which CONSULT drives some actuators apart from the ECMs and also shifts some parameters in a specified range.	×	—	×	—
ECM part number	ECM part number can be read.	×	—	×	—
Function test	Conducted by CONSULT instead of a technician to determine whether each system is "OK" or "NG".	×	—	—	—
Control unit initialisation	All registered ignition key IDs in NATS components can be initialised and new IDs can be registered.	—	—	—	×
Self-function check	ECM checks its own NATS communication interface.	—	—	—	×

× : Applicable
*1: NATS: Nissan Anti-Theft System

Lithium Battery Replacement

CONSULT contains a lithium battery. When replacing the battery obey the following:

WARNING:
Replace the lithium battery with SANYO Electric Co., Ltd., CR2032 only. Use of another battery may present a risk of fire or explosion. The battery may present a fire or chemical burn hazard if mistreated. Do not recharge, disassemble or dispose of in fire.
Keep the battery out of reach of children and discard used battery conforming to the local regulations.

Checking Equipment

When ordering the below equipment, contact your NISSAN distributor.

Tool name	Description
NISSAN CONSULT ① CONSULT unit and accessories ② Program card (EE 940) (AE930)*1, (AE950)*2, (NATS-E940)*3	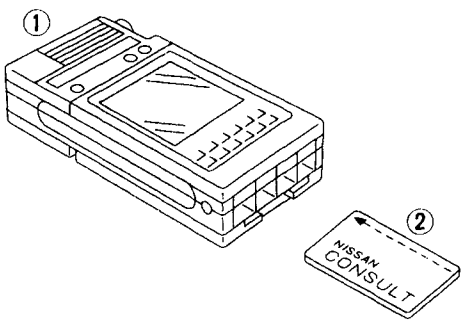 NT004

*1: For Australia
*2: Regarding ABS for Australia, a revised program card (AE950) will be applicable to this system in 1995.
*3: An order for NATS program card must be placed only with NISSAN EUROPE N.V.

Simpo PDF Merge and Split Unregistered Version - http://www.simpopdf.com

Model Variation

For Europe LHD

		Europe LHD			
Engine		GA14DE	GA16DE		CD20
Transaxle		5F	5F	AT	5F
		RS5F30A	RS5F31A	RL4F03A	RS5F31A
4-door Sedan	L	BAVALBF-EGA			
	LX	BAVALDF-EGA	BAYALDF-EGA	BAYALDA-EGA	BVCALDF-NGA
	SLX	BAVALFF-EGA	BAYALFF-EGA	BAYALFA-EGA	BVCALFF-NGA
	SR		BAYALQF-EGA		
3-door Hatchback	L	EAVALBF-EGA			
	LX	EAVALDF-EGA	EAYALDF-EGA	EAYALDA-EGA	EVCALDF-NGA
	SLX	EAVALFF-EGA	EAYALFF-EGA	EAYALFA-EGA	EVCALFF-NGA
	SR	EAVALQF-EGA	EAYALQF-EGA		
	GTI				
5-door Hatchback	L	FAVALBF-EGA			
	LX	FAVALDF-EGA	FAYALDF-EGA	FAYALDA-EGA	FVCALDF-NGA
	SLX	FAVALFF-EGA	FAYALFF-EGA	FAYALFA-EGA	FVCALFF-NGA
	SR	FAVALQF-EGA	FAYALQF-EGA		

For Europe RHD

		Europe RHD			
Engine		GA14DE	GA16DE		CD20
Transaxle		5F	5F	AT	5F
		RS5F30A	RS5F31A	RL4F03A	RS5F31A
4-door Sedan	L	BAVARBF-EEA			
	LX	BAVARDF-EEA	BAYARDF-EEA	BAYARDA-EEA	BVCARDF-NEA
	SLX	BAVARFF-EEA	BAYARFF-EEA	BAYARFA-EEA	BVCARFF-NEA
	SR		BAYARQF-EEA		
3-door Hatchback	L	EAVARBF-EEA			
	LX	EAVARDF-EEA			
	SLX	EAVARFF-EEA	EAYARFF-EEA	EAYARFA-EEA	
	SR	EAVARQF-EEA	EAYARQF-EEA		
	GTI				
5-door Hatchback	L	FAVARBF-EEA			
	LX	FAVARDF-EEA	FAYARDF-EEA	FAYARDA-EEA	FVCARDF-NEA
	SLX	FAVARFF-EEA	FAYARFF-EEA	FAYARFA-EEA	FVCARFF-NEA
	SR	FAVARQF-EEA	FAYARQF-EEA		

Simpo PDF Merge and Split Unregistered Version - http://www.simpopdf.com

Model Variation (Cont'd)

For Australia

		Australia			
Engine		GA16DE		SR20DE	
Transaxle		5F RS5F31A	4AT RL4F03A	5F RS5F32A	4AT RL4F03A
4-door Sedan	LX	BAYARDF-EMA	BAYARDA-EMA		
	SLX	BAYARFF-EMA	BAYARFA-EMA		
5-door Hatchback	LX	FAYARDF-EMA	FAYARDA-EMA		
	Q	FAYARDF-EMA	FAYARDA-EMA		
	SLX	FAYARFF-EMA	FAYARFA-EMA		
	SSS			FBYARUF-EMA	FBYARUA-EMA

Except Europe and Australia

		RHD Except Europe and Australia			
Engine		GA15DE		GA16DE	
Transaxle		5F RS5F30A	4AT RL4F03A	5F RS5F31A	4AT RL4F03A
4-door Sedan	LX	BAWARCF-EWA	BAWARCA-EWA		
	SLX			BAYARGF-EWA	BAYARGA-EWA
5-door Hatchback	XI	FAWARCF-EWA	FAWARCA-EWA		
	XIR			FAYARGF-EWA	FAYARGA-EWA

Simpo PDF Merge and Split Unregistered Version - http://www.simpopdf.com

Model Variation (Cont'd)

Prefix and suffix designations:

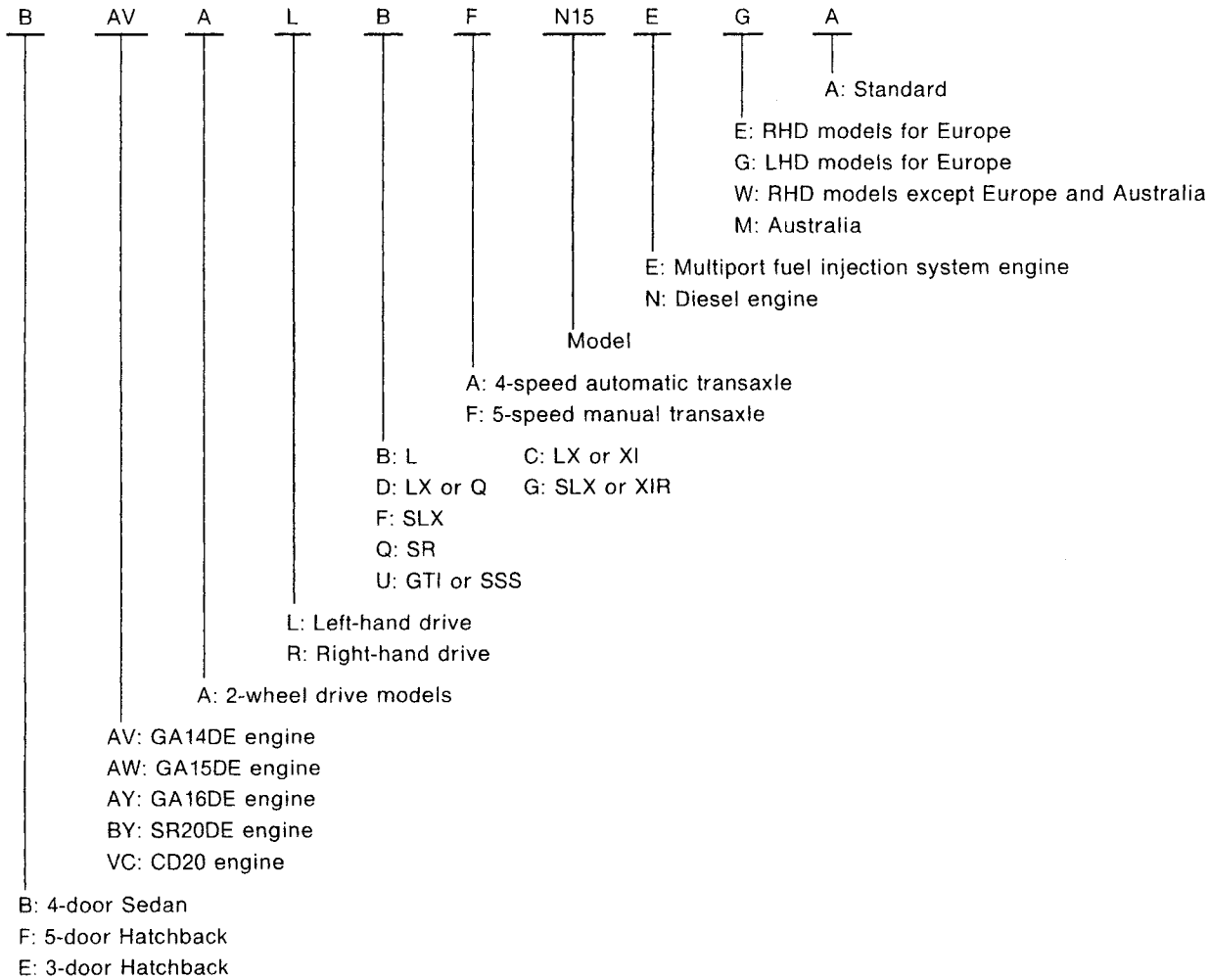

Simpo PDF Merge and Split Unregistered Version - http://www.simpopdf.com

Identification Number

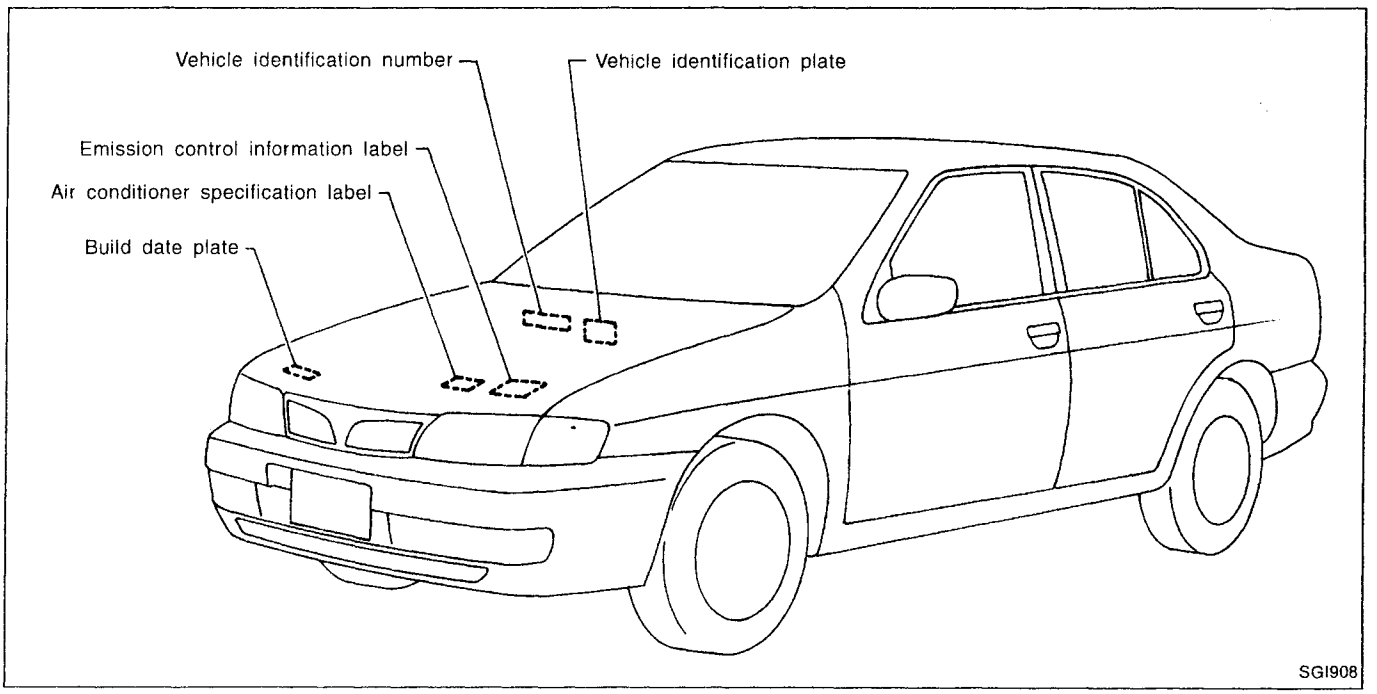

VEHICLE IDENTIFICATION NUMBER ARRANGEMENT

For Europe

JN1 B A A N15 U 0 XXXXXX

- JN1 — Manufacturer: JN1 : Nissan, Passenger vehicle
- B — Body type: B : 4-door Sedan; F : 5-door Hatchback; E : 3-door Hatchback
- A — Engine type: A : GA14DE engine; C : GA16DE engine; E : SR20DE engine; F : CD20 engine
- A — A : 2-wheel drive
- N15 — Model
- U — Destination: U : Europe
- 0 — 0 : Stopgap (no meaning)
- XXXXXX — Vehicle serial number

Simpo PDF Merge and Split Unregistered Version - http://www.simpopdf.com

Identification Number (Cont'd)

For Australia and New Zealand

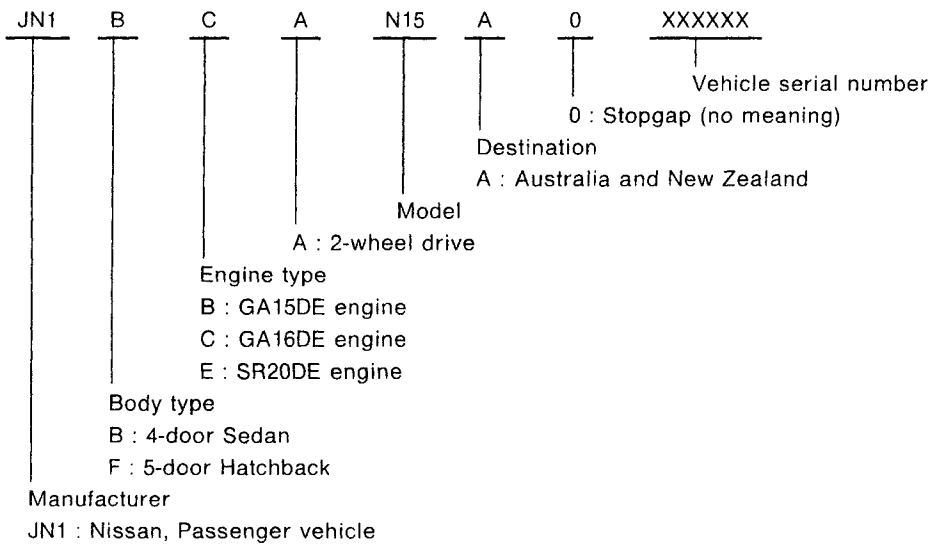

Except for Europe, Australia, New Zealand

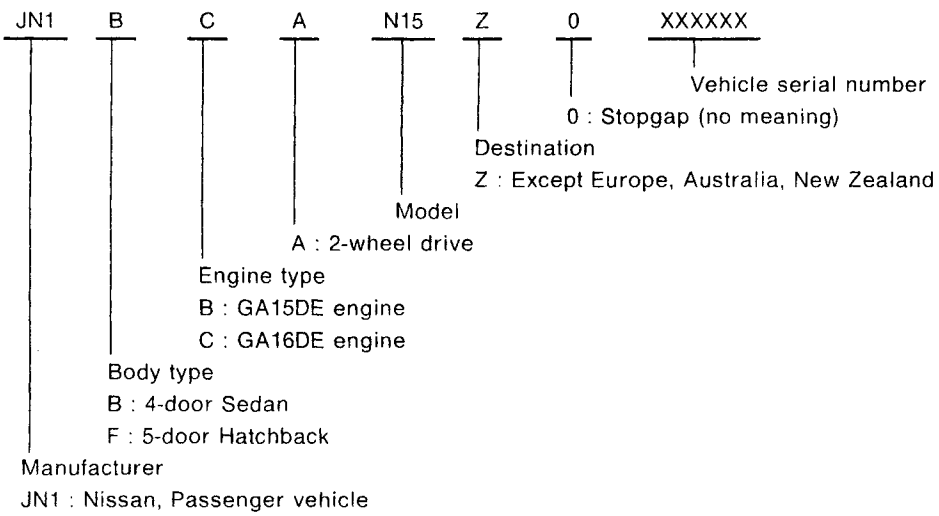

Simpo PDF Merge and Split Unregistered Version - http://www.simpopdf.com

Identification Number (Cont'd)

IDENTIFICATION PLATE

Europe

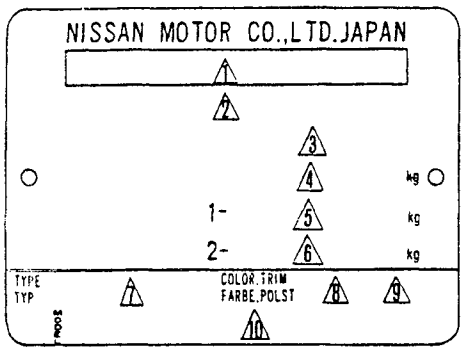

Except Europe

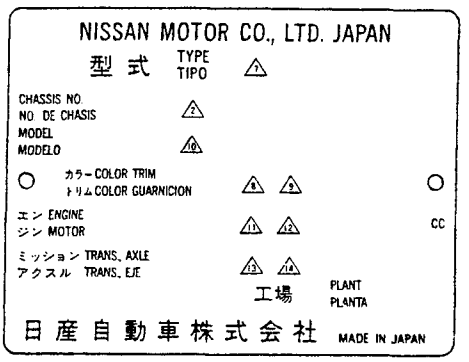

1 Type approval number
2 Vehicle identification number (Chassis number)
3 Gross vehicle weight
4 Gross combination weight
Gross vehicle weight + Gross trailing capacity (Weight)
5 Gross axle weight (Front)
6 Gross axle weight (Rear)
7 Type
8 Body color code
9 Trim color code
10 Model
11 Engine model
12 Engine displacement
13 Transaxle model
14 Axle model

SGI704

ENGINE SERIAL NUMBER

GA14DE, GA15DE and GA16DE engine

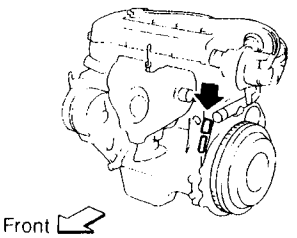

SR20DE engine

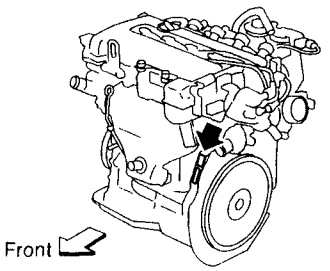

CD20 engine

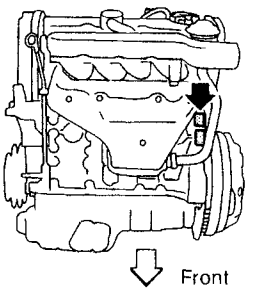

SGI912

MANUAL TRANSAXLE NUMBER

RS5F30A, RS5F31A and RS5F32A

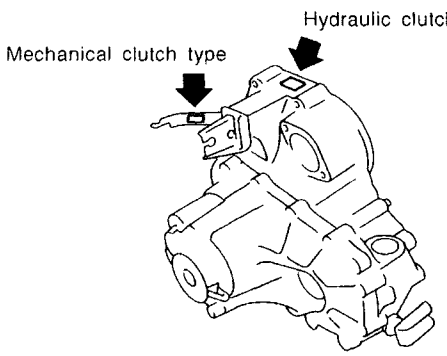

SGI913

AUTOMATIC TRANSAXLE NUMBER

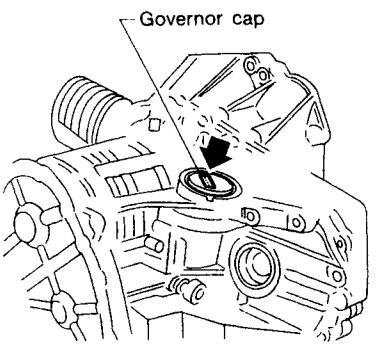

SGI656

Simpo PDF Merge and Split Unregistered Version - http://www.simpopdf.com

Dimensions

Unit: mm (in)

	Sedan	Hatchback
Overall length	4,320 (170.1)	4,120 (162.2)
Overall width	1,690 (66.5)	←
Overall height	1,395 (54.9)	←
Front tread	1,480 (58.3)*1 1,470 (57.9)*2	←
Rear tread	1,445 (56.9)*1 1,435 (56.5)*2	←
Wheelbase	2,535 (99.8)	←

*1: For models with 13-inch road wheels
*2: For models with 14-inch or 15-inch road wheels

Wheels and Tires

Road wheel	Steel	13 x 5J	14 x 5-1/2JJ	—
	Offset mm (in)	35 (1.38)	40 (1.57)	
	Aluminum	13 x 5J	14 x 5-1/2JJ	15 x 6J
	Offset mm (in)	35 (1.38)	40 (1.57)	40 (1.57)
Tire size	Conventional	175/70R13 82S 165SR13	175/65R14 82H 185/65R14 86H	195/55R15 84V
	Spare	Conventional	Conventional	Conventional

Simpo PDF Merge and Split Unregistered Version - http://www.simpopdf.com

Preparation

SPECIAL SERVICE TOOLS

Tool number Tool name	Description
LM4086-0200 Board on attachment	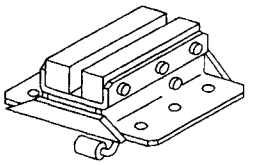 NT001
LM4519-0000 Safety stand attachment	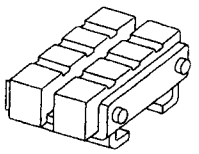 NT002

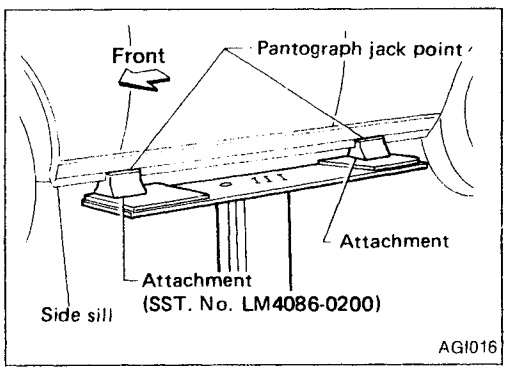

Board-on Lift

CAUTION:

Make sure vehicle is empty when lifting.

- **The board-on lift attachment (LM4086-0200) set at front end of vehicle should be set on the front of the sill under the front door opening.**
- **Position attachments at front and rear ends of board-on lift.**

Simpo PDF Merge and Split Unregistered Version - http://www.simpopdf.com

Garage Jack and Safety Stand

WARNING:

- **Never get under the vehicle while it is supported only by the jack. Always use safety stands when you have to get under the vehicle.**
- **Place wheel chocks at both front and back of the wheels on the ground.**

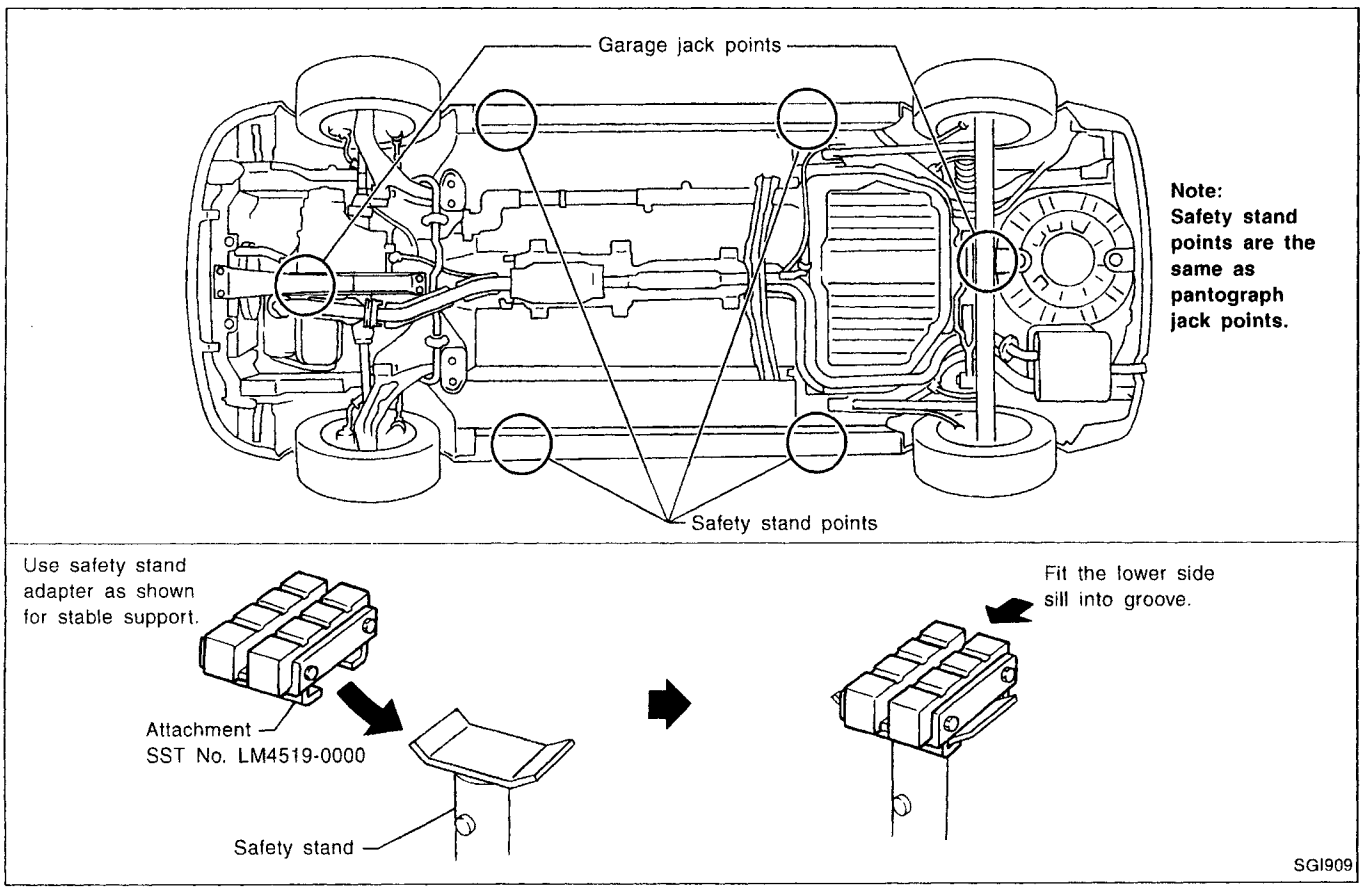

Simpo PDF Merge and Split Unregistered Version - http://www.simpopdf.com

2-pole Lift

WARNING:
When lifting the vehicle, open the lift arms as wide as possible and ensure that the front and rear of the vehicle are well balanced.
When setting the lift arm, do not allow the arm to contact the brake tubes and fuel lines.

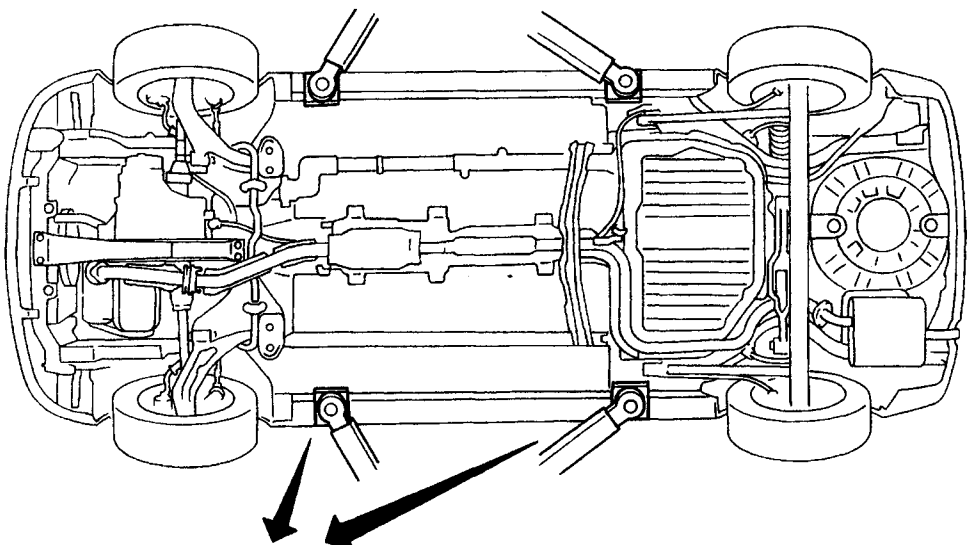

Note:
Lift-up points are the same as pantograph jack points.

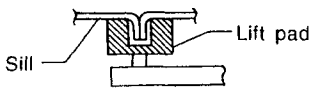

Put the sill in the groove of the lift pad to prevent the sill from deforming. If the pad does not have a groove, prepare a suitable attachment with one.

SGI910

Simpo PDF Merge and Split Unregistered Version - http://www.simpopdf.com

Tow Truck Towing

CAUTION:

- **All applicable local laws regarding the towing operation must be obeyed.**
- **It is necessary to use proper towing equipment to avoid possible damage to the vehicle during towing operation. Towing is in accordance with Towing Procedure Manual at dealer.**
- **When towing with the rear wheels on the ground, release the parking brake and move the gearshift lever to neutral position.**

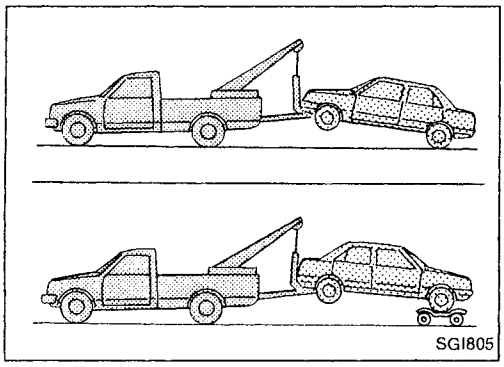
SGI805

NISSAN recommends that vehicle be towed with the driving (front) wheels off the ground as illustrated.

TOWING AN AUTOMATIC TRANSAXLE MODEL WITH FOUR WHEELS ON GROUND

Observe the following restricted towing speeds and distances.

Speed:
Below 50 km/h (30 MPH)
Distance:
Less than 65 km (40 miles)

CAUTION:

Never tow an automatic transaxle model from the rear (i.e., backward) with four wheels on the ground as this may cause serious and expensive damage to the transaxle.

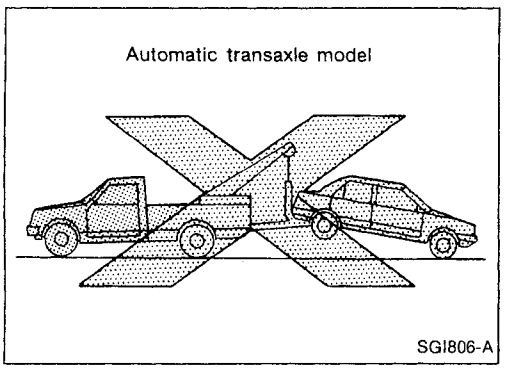

SGI806-A

TOWING AN AUTOMATIC TRANSAXLE MODEL WITH REAR WHEELS RAISED (With front wheels on ground)

Never tow an automatic transaxle model with rear wheels raised (with front wheels on ground) as this may cause serious and expensive damage to the transaxle. If it is necessary to tow it with rear wheels raised, always use a towing dolly under the front wheels.

TOWING POINT

Always pull the cable straight out from the vehicle. Never pull on the hook at a sideways angle.

CAUTION:

Remove the front spoiler when towing the vehicle forward. Otherwise, the towing device may damage the front spoiler.

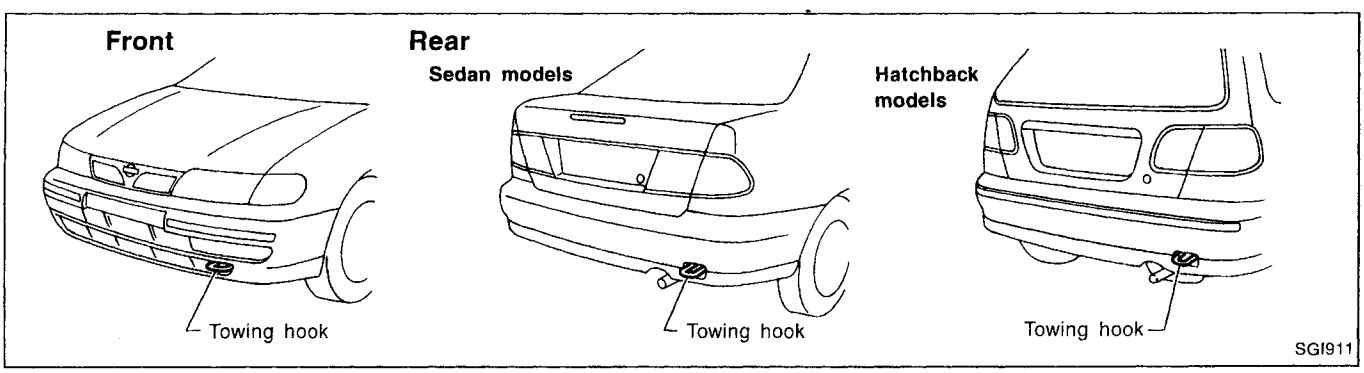

SGI911

Simpo PDF Merge and Split Unregistered Version - http://www.simpopdf.com

TIGHTENING TORQUE OF STANDARD BOLTS

Grade	Bolt size	Bolt diameter* mm	Pitch mm	Tightening torque (Without lubricant)							
				Hexagon head bolt				Hexagon flange bolt			
				N·m	kg-m	ft-lb	in-lb	N·m	kg-m	ft-lb	in-lb
4T	M6	6.0	1.0	5.1	0.52	3.8	45.1	6.1	0.62	4.5	53.8
	M8	8.0	1.25	13	1.3	9	—	15	1.5	11	—
			1.0	13	1.3	9	—	16	1.6	12	—
	M10	10.0	1.5	25	2.5	18	—	29	3.0	22	—
			1.25	25	2.6	19	—	30	3.1	22	—
	M12	12.0	1.75	42	4.3	31	—	51	5.2	38	—
			1.25	46	4.7	34	—	56	5.7	41	—
	M14	14.0	1.5	74	7.5	54	—	88	9.0	65	—
7T	M6	6.0	1.0	8.4	0.86	6.2	74.6	10	1.0	7	87
	M8	8.0	1.25	21	2.1	15	—	25	2.5	18	—
			1.0	22	2.2	16	—	26	2.7	20	—
	M10	10.0	1.5	41	4.2	30	—	48	4.9	35	—
			1.25	43	4.4	32	—	51	5.2	38	—
	M12	12.0	1.75	71	7.2	52	—	84	8.6	62	—
			1.25	77	7.9	57	—	92	9.4	68	—
	M14	14.0	1.5	127	13.0	94	—	147	15.0	108	—
9T	M6	6.0	1.0	12	1.2	9	—	15	1.5	11	—
	M8	8.0	1.25	29	3.0	22	—	35	3.6	26	—
			1.0	31	3.2	23	—	37	3.8	27	—
	M10	10.0	1.5	59	6.0	43	—	70	7.1	51	—
			1.25	62	6.3	46	—	74	7.5	54	—
	M12	12.0	1.75	98	10.0	72	—	118	12.0	87	—
			1.25	108	11.0	80	—	137	14.0	101	—
	M14	14.0	1.5	177	18.0	130	—	206	21.0	152	—

1. Special parts are excluded.

2. This standard is applicable to bolts having the following marks embossed on the bolt head.

*: Nominal diameter

Grade		Mark
4T	.....	4
7T	.....	7
9T	.....	9

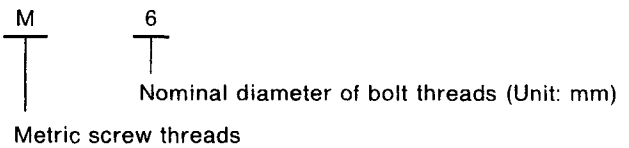

Simpo PDF Merge and Split Unregistered Version - http://www.simpopdf.com

SAE J1930 Terminology List

All emission related terms used in this publication in accordance with SAE J1930 are listed. Accordingly, new terms, new acronyms/abbreviations and old terms are listed in the following chart.

***: Not applicable

NEW TERM	NEW ACRONYM / ABBREVIATION	OLD TERM
Absolute pressure sensor	***	***
Air cleaner	ACL	Air cleaner
Barometric pressure	BARO	***
Barometric pressure sensor-BCDD	BAROS-BCDD	BCDD
Camshaft position	CMP	***
Camshaft position sensor	CMPS	Crank angle sensor
Carburetor	CARB	Carburetor
Charge air cooler	CAC	Intercooler
Closed loop	CL	Closed loop
Closed throttle position switch	CTP switch	Idle switch
Clutch pedal position switch	CPP switch	Clutch switch
Continuous fuel injection system	CFI system	***
Continuous trap oxidizer system	CTOX system	***
Crankshaft position	CKP	***
Crankshaft position sensor	CKPS	***
Data link connector	DLC	***
Data link connector for CONSULT	DLC for CONSULT	Diagnostic connector for CONSULT
Diagnostic test mode	DTM	Diagnostic mode
Diagnostic test mode selector	DTM selector	Diagnostic mode selector
Diagnostic test mode I	DTM I	Mode I
Diagnostic test mode II	DTM II	Mode II
Diagnostic trouble code	DTC	Malfunction code
Direct fuel injection system	DFI system	***
Distributor ignition system	DI system	Ignition timing control
Early fuel evaporation-mixture heater	EFE-mixture heater	Mixture heater
Early fuel evaporation system	EFE system	Mixture heater control
Electrically erasable programmable read only memory	EEPROM	***
Electronic ignition system	EI system	Ignition timing control
Engine control module	ECM	ECCS control unit
Engine coolant temperature	ECT	Engine temperature
Engine coolant temperature sensor	ECTS	Engine temperature sensor
Engine modification	EM	***
Engine speed	RPM	Engine speed
Erasable programmable read only memory	EPROM	***
Evaporative emission canister or Canister	EVAP canister or Canister	Canister
Evaporative emission canister purge control solenoid valve	EVAP canister purge control solenoid valve	Canister control solenoid valve

Simpo PDF Merge and Split Unregistered Version - http://www.simpopdf.com

SAE J1930 Terminology List (Cont'd)

***: Not applicable

NEW TERM	NEW ACRONYM / ABBREVIATION	OLD TERM
Evaporative emission canister purge control valve	EVAP canister purge control valve	Canister purge cut valve
Evaporative emission canister vent control valve	EVAP canister vent control valve	***
Evaporative emission canister purge volume control valve	EVAP canister purge volume control valve	Canister purge control valve
Evaporative emission control system pressure sensor	EVAP control system pressure sensor	***
Evaporative emission shut valve	EVAP shut valve	Shutoff valve
Evaporative emission system	EVAP system	Evaporative emission control system
Exhaust gas recirculation valve	EGR valve	EGR valve
Exhaust gas recirculation control-BPT valve	EGRC-BPT valve	BPT valve
Exhaust gas recirculation control-solenoid valve	EGRC-solenoid valve	EGR control solenoid valve
Exhaust gas recirculation temperature sensor	EGR temperature sensor	Exhaust gas temperature sensor
Flash electrically erasable programmable read only memory	FEEPROM	***
Flash erasable programmable read only memory	FEPROM	***
Flexible fuel sensor	FFS	***
Flexible fuel system	FF system	***
Heated Oxygen sensor	HO2S	Exhaust gas sensor
Idle air control system	IAC system	Idle speed control
Idle air control valve-air regulator	IACV-air regulator	Air regulator
Idle air control valve-auxiliary air control valve	IACV-AAC valve	Auxiliary air control (AAC) valve
Idle air control valve-FICD solenoid valve	IACV-FICD solenoid valve	FICD solenoid valve
Idle air control valve-idle up control solenoid valve	IACV-idle up control solenoid valve	Idle up control solenoid valve
Idle speed control-FI pot	ISC-FI pot	FI pot
Idle speed control system	ISC system	***
Ignition control module	ICM	***
Indirect fuel injection system	IFI system	***
Intake air temperature sensor	IATS	Air temperature sensor
Knock	***	Detonation
Knock sensor	KS	Detonation sensor
Malfunction indicator lamp	MIL	Check engine light
Manifold absolute pressure	MAP	***
Manifold absolute pressure/Barometric pressure switch solenoid valve	MAP/BARO switch solenoid valve	***
Manifold absolute pressure sensor	MAPS	***
Manifold differential pressure	MDP	***
Manifold differential pressure sensor	MDPS	***

Simpo PDF Merge and Split Unregistered Version - http://www.simpopdf.com

SAE J1930 Terminology List (Cont'd)

***: Not applicable

NEW TERM	NEW ACRONYM / ABBREVIATION	OLD TERM
Manifold surface temperature	MST	***
Manifold surface temperature sensor	MSTS	***
Manifold vacuum zone	MVZ	***
Manifold vacuum zone sensor	MVZS	***
Mass air flow sensor	MAFS	Air flow meter
Mixture control solenoid valve	MC solenoid valve	Air-fuel ratio control solenoid valve
Multiport fuel injection System	MFI system	Fuel injection control
Neutral position switch	***	Neutral switch
Non-volatile random access memory	NVRAM	***
On-board diagnostic system	OBD system	Self-diagnosis
Open loop	OL	Open loop
Oxidation catalyst	OC	Catalyst
Oxidation catalytic converter system	OC system	***
Oxygen sensor	O2S	Exhaust gas sensor
Park position switch	***	Park switch
Park/neutral position switch	PNP switch	Park/neutral switch
Periodic trap oxidizer system	PTOX system	***
Powertrain control module	PCM	***
Programmable read only memory	PROM	***
Pulsed secondary air injection control solenoid valve	PAIRC solenoid valve	AIV control solenoid valve
Pulsed secondary air injection system	PAIR system	Air induction valve (AIV) control
Pulsed secondary air injection valve	PAIR valve	Air induction valve
Random access memory	RAM	***
Read only memory	ROM	***
Scan tool	ST	***
Secondary air injection pump	AIR pump	***
Secondary air injection system	AIR system	***
Sequential multiport fuel injection system	SFI system	Sequential fuel injection
Service reminder indicator	SRI	***
Simultaneous multiport fuel injection system	***	Simultaneous fuel injection
Smoke puff limiter system	SPL system	***
Supercharger	SC	***
Supercharger bypass	SCB	***
System readiness test	SRT	***
Tank fuel temperature sensor	***	***
Thermal vacuum valve	TVV	Thermal vacuum valve
Three way catalyst	TWC	Catalyst
Three way catalytic converter system	TWC system	***
Three way + oxidation catalyst	TWC + OC	Catalyst

Simpo PDF Merge and Split Unregistered Version - http://www.simpopdf.com

SAE J1930 Terminology List (Cont'd)

***: Not applicable

NEW TERM	NEW ACRONYM / ABBREVIATION	OLD TERM
Three way + oxidation catalytic converter system	TWC + OC system	***
Throttle body	TB	Throttle chamber SPI body
Throttle body fuel injection system	TBI system	Fuel injection control
Throttle position	TP	Throttle position
Throttle position sensor	TPS	Throttle sensor
Throttle position switch	TP switch	Throttle switch
Torque converter clutch solenoid valve	TCC solenoid valve	Lock-up cancel solenoid Lock-up solenoid
Turbocharger	TC	Turbocharger
Vacuum cut valve	***	Vacuum control valve
Vacuum cut valve bypass valve	***	***
Vehicle speed sensor	VSS	Vehicle speed sensor
Volume air flow sensor	VAFS	Air flow meter
Warm up oxidation catalyst	WU-OC	Catalyst
Warm up oxidation catalytic converter system	WU-OC system	***
Warm up three way catalyst	WU-TWC	Catalyst
Warm up three way catalytic converter system	WU-TWC system	***
Wide open throttle position switch	WOTP switch	Full switch

Simpo PDF Merge and Split Unregistered Version - http://www.simpopdf.com

HEATER & AIR CONDITIONER

SECTION HA

CONTENTS

PRECAUTIONS AND PREPARATION 2
Supplemental Restraint System (SRS) "AIR BAG" (Dual Air Bag System) 2
Supplemental Restraint System (SRS) "AIR BAG" (Single Air Bag System) 2
Precautions for Working with HFC-134a (R-134a) 3
General Refrigerant Precautions 3
Precautions for Refrigerant Connection 4
Precautions for Servicing Compressor 5
Special Service Tools 5
HFC-134a (R-134a) Service Tools and Equipment 6
Precautions for Service Equipment 8
DESCRIPTION 10
Refrigeration Cycle 10
Component Layout 11
Discharge Air Flow 12
Control Operation 13
TROUBLE DIAGNOSES 14
Contents 14
Wiring Diagram — HEATER — 36
Wiring Diagram — A/C — 38
SERVICE PROCEDURES 66
HFC-134a (R-134a) Service Procedure 66
Maintenance of Lubricant Quantity in Compressor 68
Refrigerant Lines 70
Compressor Mounting 75
Belt Tension 76
Fast Idle Control Device (FICD) 76
Compressor — Model DKV-11D and DKV-14D (ZEXEL make) 77
Compressor Clutch 77
Thermal Protector 80
Compressor — Model CR-14 (Calsonic make) 80
Compressor Clutch 80
Thermal Protector 82
Ventilation Air Filter 83
SERVICE DATA AND SPECIFICATIONS (SDS) 84
General Specifications 84
Inspection and Adjustment 84

When you read wiring diagrams:
- **Read GI section, "HOW TO READ WIRING DIAGRAMS".**
- **See EL section, "POWER SUPPLY ROUTING" for power distribution circuit.**

When you perform trouble diagnoses, read GI section, "HOW TO FOLLOW FLOW CHART IN TROUBLE DIAGNOSES" and "HOW TO PERFORM EFFICIENT DIAGNOSIS FOR AN ELECTRICAL INCIDENT".

Simpo PDF Merge and Split Unregistered Version - http://www.simpopdf.com

Supplemental Restraint System (SRS) "AIR BAG" (Dual Air Bag System)

The Supplemental Restraint System "Air Bag" used along with a seat belt, helps to reduce the risk or severity of injury to the driver and front passenger in a frontal collision. The Supplemental Restraint System consists of air bag modules (located in the center of the steering wheel and on the instrument panel on the passenger side), a diagnosis sensor unit, warning lamp, wiring harness and spiral cable. Information necessary to service the system safely is included in the **RS section** of this Service Manual.

WARNING:

- **To avoid rendering the SRS inoperative, which could increase the risk of personal injury or death in the event of a collision which would result in air bag inflation, all maintenance must be performed by an authorized NISSAN dealer.**
- **Improper maintenance, including incorrect removal and installation of the SRS, can lead to personal injury caused by unintentional activation of the system.**
- **Do not use electrical test equipment on any circuit related to the SRS unless instructed to in this Service Manual. SRS wiring harnesses are covered with yellow insulation either just before the harness connectors or for the complete harness, for easy identification.**

Supplemental Restraint System (SRS) "AIR BAG" (Single Air Bag System)

The Supplemental Restraint System "Air Bag" and used along with a seat belt, helps to reduce the risk or severity of injury to the driver in a frontal collision. The Supplemental Restraint System consists of an air bag module (located in the center of the steering wheel), a diagnosis sensor unit, warning lamp, wiring harness and spiral cable. Information necessary to service the system safely is included in the **RS section** of this Service Manual.

WARNING:

- **To avoid rendering the SRS inoperative, which could increase the risk of personal injury or death in the event of a collision which would result in air bag inflation, all maintenance must be performed by an authorized NISSAN dealer.**
- **Improper maintenance, including incorrect removal and installation of the SRS, can lead to personal injury caused by unintentional activation of the system.**
- **Do not use electrical test equipment on any circuit related to the SRS unless instructed to in this Service Manual.**

Simpo PDF Merge and Split Unregistered Version - http://www.simpopdf.com

Precautions for Working with HFC-134a (R-134a)

WARNING:

- CFC-12 (R-12) refrigerant and HFC-134a (R-134a) refrigerant are not compatible. These refrigerants must never be mixed, even in the smallest amounts. If the refrigerants are mixed, compressor failure is likely to occur.
- Use only specified lubricant for the HFC-134a (R-134a) A/C system and HFC-134a (R-134a) components. If lubricant other than that specified is used, compressor failure is likely to occur.
- The specified HFC-134a (R-134a) lubricant rapidly absorbs moisture from the atmosphere. The following handling precautions must be observed:
  - a: When removing refrigerant components from a vehicle, immediately cap (seal) the component to minimize the entry of moisture from the atmosphere.
  - b: When installing refrigerant components to a vehicle, do not remove the caps (unseal) until just before connecting the components. Connect all refrigerant loop components as quickly as possible to minimize the entry of moisture into system.
  - c: Only use the specified lubricant from a sealed container. Immediately reseal containers of lubricant. Without proper sealing, lubricant will become moisture saturated and should not be used.
  - d: Avoid breathing A/C refrigerant and lubricant vapor or mist. Exposure may irritate eyes, nose and throat. Remove R-134a from the A/C system, using certified service equipment meeting requirements of SAE J2210 (R-134a recycling equipment), or J2209 (R-134a recovery equipment). If accidental system discharge occurs, ventilate work area before resuming service. Additional health and safety information may be obtained from refrigerant and lubricant manufacturers.
  - e: Do not allow lubricant (Nissan A/C System Oil Type S) to come in contact with styrofoam parts. Damage may result.

General Refrigerant Precautions

WARNING:

- Do not release refrigerant into the air. Use approved recovery/recycling equipment to capture the refrigerant every time an air conditioning system is discharged.
- Always wear eye and hand protection (goggles and gloves) when working with any refrigerant or air conditioning system.
- Do not store or heat refrigerant containers above 52°C (125°F).
- Do not heat a refrigerant container with an open flame; if container warming is required, place the bottom of the container in a warm pail of water.
- Do not intentionally drop, puncture, or incinerate refrigerant containers.
- Keep refrigerant away from open flames: poisonous gas will be produced if refrigerant burns.
- Refrigerant will displace oxygen, therefore be certain to work in well ventilated areas to prevent suffocation.
- Do not introduce compressed air to any refrigerant container or refrigerant component.

Simpo PDF Merge and Split Unregistered Version - http://www.simpopdf.com

Precautions for Refrigerant Connection

WARNING:
Make sure all refrigerant is discharged into the recycling equipment and the pressure in the system is less than atmospheric pressure. Then gradually loosen the discharge side hose fitting and remove it.
CAUTION:
When replacing or cleaning refrigerant cycle components, observe the following.

- **When the compressor is removed, store it in the same position as it is when mounted on the car. Failure to do so will cause lubricant to enter the low pressure chamber.**
- **When connecting tubes, always use a torque wrench and a back-up wrench.**
- **After disconnecting tubes, immediately plug all openings to prevent entry of dirt and moisture.**
- **When installing an air conditioner in the vehicle, connect the pipes as the final stage of the operation. Do not remove the seal caps of pipes and other components until just before required for connection.**
- **Allow components stored in cool areas to warm to working area temperature before removing seal caps. This prevents condensation from forming inside A/C components.**
- **Thoroughly remove moisture from the refrigeration system before charging the refrigerant.**
- **Always replace used O-rings.**
- **When connecting tube, apply lubricant to portions shown in illustration. Be careful not to apply lubricant to threaded portion.**
  Lubricant name: Nissan A/C System Oil Type R
  Part number: KLH00-PAGR0
- **O-ring must be closely attached to inflated portion of tube.**
- **After inserting tube into union until O-ring is no longer visible, tighten nut to specified torque.**
- **After connecting line, conduct leak test and make sure that there is no leakage from connections. When the gas leaking point is found, disconnect that line and replace the O-ring. Then tighten connections of seal seat to the specified torque.**

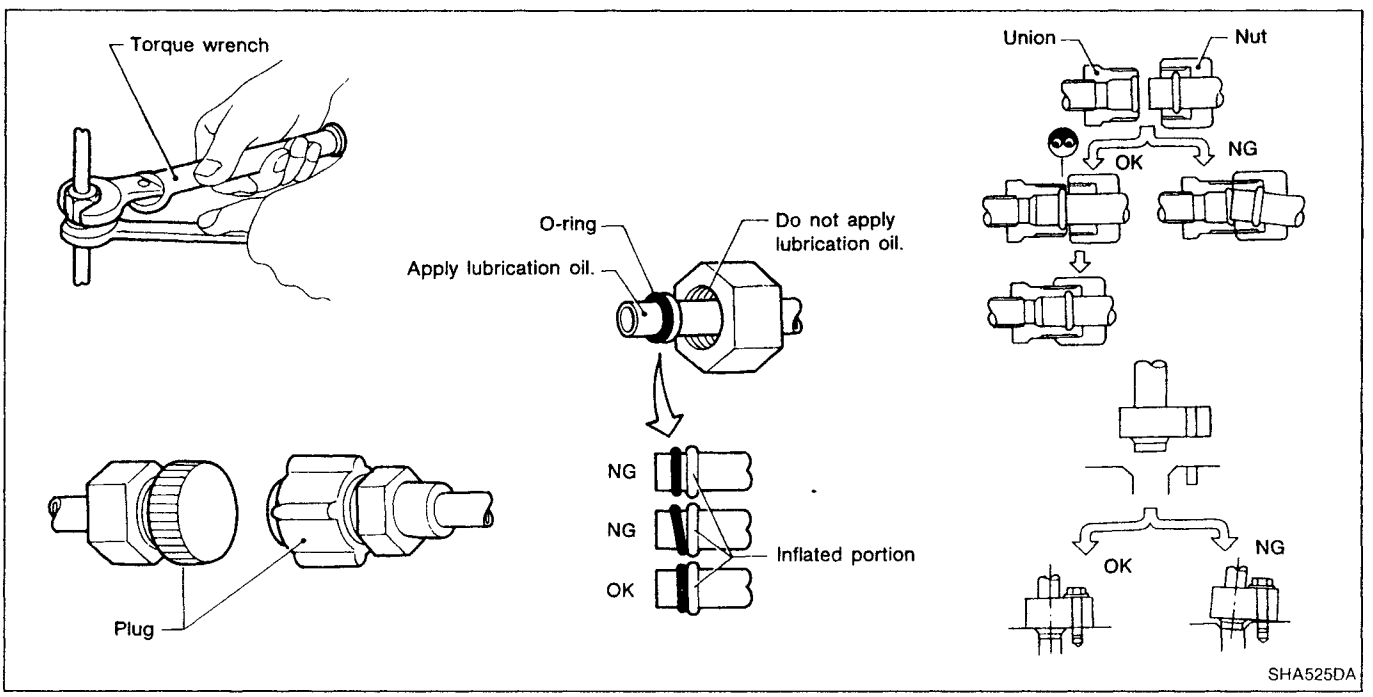

Simpo PDF Merge and Split Unregistered Version - http://www.simpopdf.com

Precautions for Servicing Compressor

- **Plug all openings to prevent moisture and foreign matter from entering.**
- **When the compressor is removed, store it in the same position as it is when mounted on the car.**
- **When replacing or repairing compressor, follow "Maintenance of Lubricant Quantity in Compressor" exactly. Refer to HA-68.**
- **Keep friction surfaces between clutch and pulley clean. If the surface is contaminated, with lubricant, wipe it off by using a clean waste cloth moistened with thinner.**
- **After compressor service operation, turn the compressor shaft by hand more than five turns in both directions. This will equally distribute lubricant inside the compressor. After the compressor is installed, let the engine idle and operate the compressor for one hour.**
- **After replacing the compressor magnet clutch, apply voltage to the new one and check for normal operation.**

Special Service Tools

DKV-11D and DKV-14D compressors

Tool number Tool name	Description	
KV99231260 Clutch disc wrench	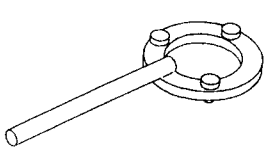 NT204	Removing shaft nut and clutch disc
KV99232340 Clutch disc puller	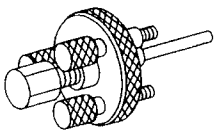 NT206	Removing clutch disc
KV99234330 Pulley installer	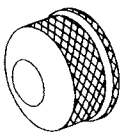 NT207	Installing pulley
KV99233130 Center pulley puller	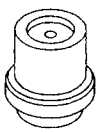 NT208	Removing pulley

HA

Simpo PDF Merge and Split Unregistered Version - http://www.simpopdf.com

Special Service Tools (Cont'd)

CR-14 compressor

Tool number Tool name	Description	
KV99106700 Clutch disc wrench	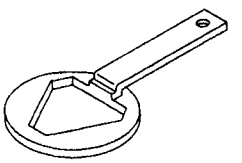 NT351	Removing shaft nut and clutch disc
KV99106800 Pulley installer	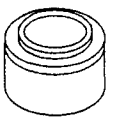 NT352	Installing pulley

HFC-134a (R-134a) Service Tools and Equipment

Never mix HFC-134a refrigerant and/or its specified lubricant with CFC-12 (R-12) refrigerant and/or its lubrication oil.
Separate and non-interchangeable service equipment must be used for each type of refrigerant/lubricant.
Refrigerant container fittings, service hose fittings and service equipment fittings (equipment which handles refrigerant and/or lubricant) are different between CFC-12 (R-12) and HFC-134a (R-134a). This is to avoid mixed use of the refrigerants/lubricant.
Adapters that convert one size fitting to another must never be used: refrigerant/lubricant contamination will occur and compressor failure will result.

Tool name	Description	Note
HFC-134a (R-134a) refrigerant	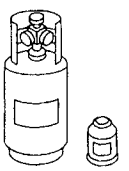 NT196	Container color: Light blue Container marking: HFC-134a (R-134a) Fitting size: Thread size ● large container 1/2"-16 ACME
Nissan A/C System Oil Type R (Part No.: KLH00-PAGR0)	 NT197	Type: Poly alkyline glycol oil (PAG), type R Application: HFC-134a (R-134a) vane rotary compressors (Nissan only) Lubricity: 40 mℓ (1.4 Imp fl oz)
Recovery/Recycling/ Recharging equipment	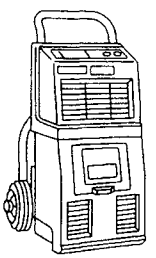 NT195	Function: Refrigerant Recovery and Recycling and Recharging

Simpo PDF Merge and Split Unregistered Version - http://www.simpopdf.com

HFC-134a (R-134a) Service Tools and Equipment (Cont'd)

Tool name	Description	Note
Electrical leak detector	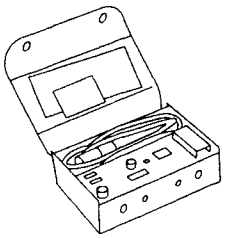 NT198	Power supply: ● DC 12 V (Cigarette lighter)
Manifold gauge set (with hoses and couplers)	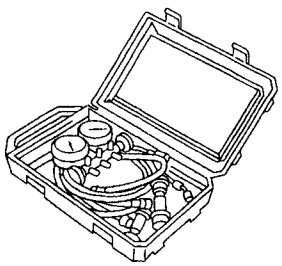 NT199	Identification: ● The gauge face indicates R-134a. Fitting size: Thread size ● 1/2"-16 ACME
Service hoses ● High side hose ● Low side hose ● Utility hose	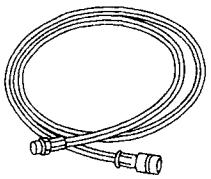 NT201	Hose color: ● Low hose: Blue with black stripe ● High hose: Red with black stripe ● Utility hose: Yellow with black stripe or green with black stripe Hose fitting to gauge: ● 1/2"-16 ACME
Service couplers ● High side coupler ● Low side coupler	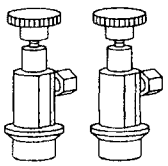 NT202	Hose fitting to service hose: ● M14 x 1.5 fitting is optional or permanently attached.
Refrigerant weight scale	 NT200	For measuring of refrigerant Fitting size: Thread size ● 1/2"-16 ACME
Vacuum pump (Including the isolator valve)	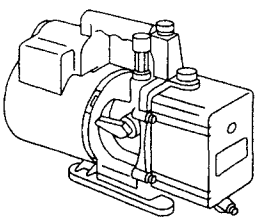 NT203	Capacity: ● Air displacement: 4 CFM ● Micron rating: 20 microns ● Oil capacity: 482 g (17 oz) Fitting size: Thread size ● 1/2"-16 ACME

Simpo PDF Merge and Split Unregistered Version - http://www.simpopdf.com

Precautions for Service Equipment

RECOVERY/RECYCLING/RECHARGING EQUIPMENT

Be certain to follow the manufacturers instructions for machine operation and machine maintenance. Never introduce any refrigerant other than that specified into the machine.

ELECTRONIC LEAK DETECTOR

Be certain to follow the manufactures instructions for tester operation and tester maintenance.

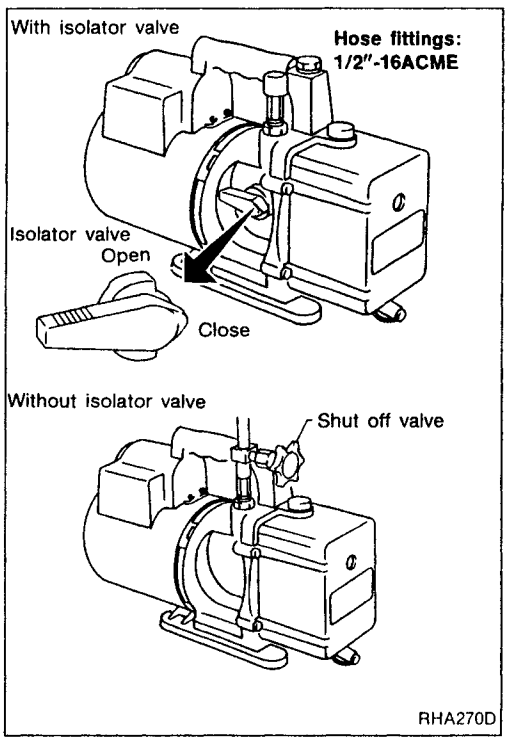

VACUUM PUMP

The lubricant contained inside the vacuum pump is not compatible with the specified lubricant for HFC-134a (R-134a) A/C systems. The vent side of the vacuum pump is exposed to atmospheric pressure. So the vacuum pump lubricant may migrate out of the pump into the service hose. This is possible when the pump is switched off after evacuation (vacuuming) and hose is connected to it.

To prevent this migration, use a manual valve placed near the hose-to-pump connection, as follows.

- Usually vacuum pumps have a manual isolator valve as part of the pump. Close this valve to isolate the service hose from the pump.
- For pumps without an isolator, use a hose equipped with a manual shut-off valve near the pump end. Close the valve to isolate the hose from the pump.
- If the hose has an automatic shut off valve, disconnect the hose from the pump. As long as the hose is connected, the valve is open and lubricating oil may migrate.

Some one-way valves open when vacuum is applied and close under a no vacuum condition. Such valves may restrict the pump's ability to pull a deep vacuum and are not recommended.

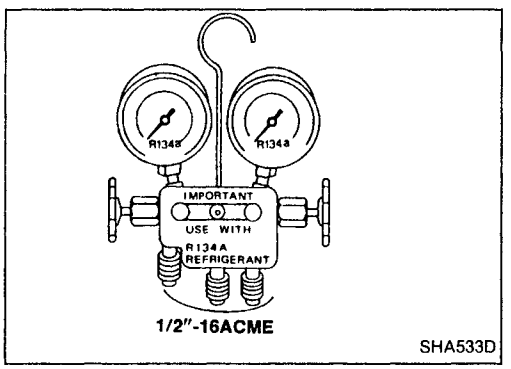

MANIFOLD GAUGE SET

Be certain that the gauge face indicates R-134a or 134a. Be sure the gauge set has 1/2''-16 ACME threaded connections for service hoses. Confirm the set has been used only with refrigerant HFC-134a (R-134a) and specified lubricants.

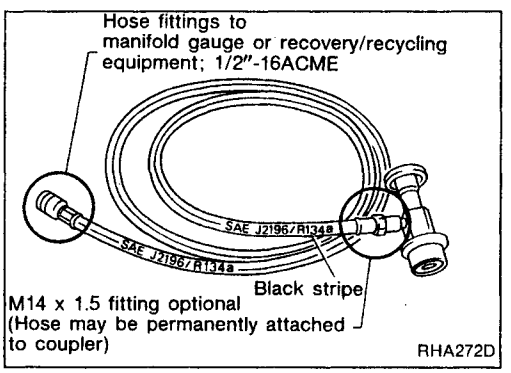

SERVICE HOSES

Be certain that the service hoses display the markings described (colored hose with black stripe). All hoses must include positive shut off devices (either manual or automatic) near the end of the hoses opposite the manifold gauge.

Simpo PDF Merge and Split Unregistered Version - http://www.simpopdf.com

Precautions for Service Equipment (Cont'd)

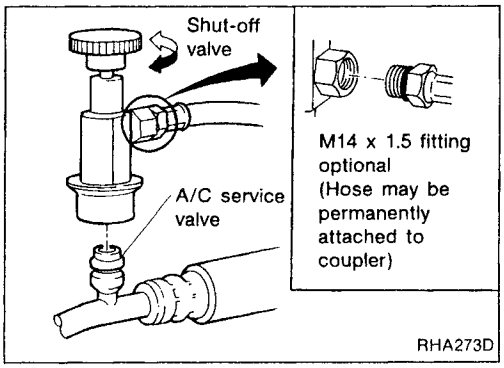

SERVICE COUPLERS

Never attempt to connect HFC-134a (R-134a) service couplers to an CFC-12 (R-12) A/C system. The HFC-134a (R-134a) couplers will not properly connect to the CFC-12 (R-12) system. However, if an improper connection is attempted, discharging and contamination may occur.

Shut off valve rotation	A/C service valve
Clockwise	Open
Counterclockwise	Close

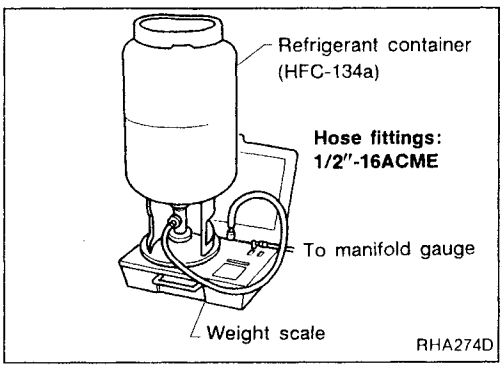

REFRIGERANT WEIGHT SCALE

Verify that no refrigerant other than HFC-134a (R-134a) and specified lubricants have been used with the scale. If the scale controls refrigerant flow electronically, the hose fitting must be 1/2''-16 ACME.

CHARGING CYLINDER

Using a charging cylinder is not recommended. Refrigerant may be vented into air from cylinder's top valve when filling the cylinder with refrigerant. Also, the accuracy of the cylinder is generally less than that of an electronic scale or of quality recycle/recharge equipment.

Simpo PDF Merge and Split Unregistered Version - http://www.simpopdf.com

Refrigeration Cycle

REFRIGERANT FLOW

The refrigerant flow is in the standard pattern. Refrigerant flows through the compressor, condenser, liquid tank, evaporator and back to the compressor.
The refrigerant evaporation through the evaporator coil is controlled by an externally equalized expansion valve, located inside the evaporator case.

FREEZE PROTECTION

The compressor cycles on and off to maintain the evaporator temperature within a specified range. When the evaporator coil temperature falls below a specified point, the thermo control amplifier interrupts the compressor operation. When the evaporator coil temperature rises above the specification, the thermo control amplifier allows compressor operation.

REFRIGERANT SYSTEM PROTECTION

Dual-pressure switch

The dual-pressure switch is located on the liquid tank. If the system pressure rises or falls out of specifications, the switch opens to interrupt compressor clutch operation.

Fusible plug

Open at temperature above 105°C (221°F), thereby discharging refrigerant to the atmosphere. If this plug is melted and opened, check the refrigerant line and replace liquid tank.

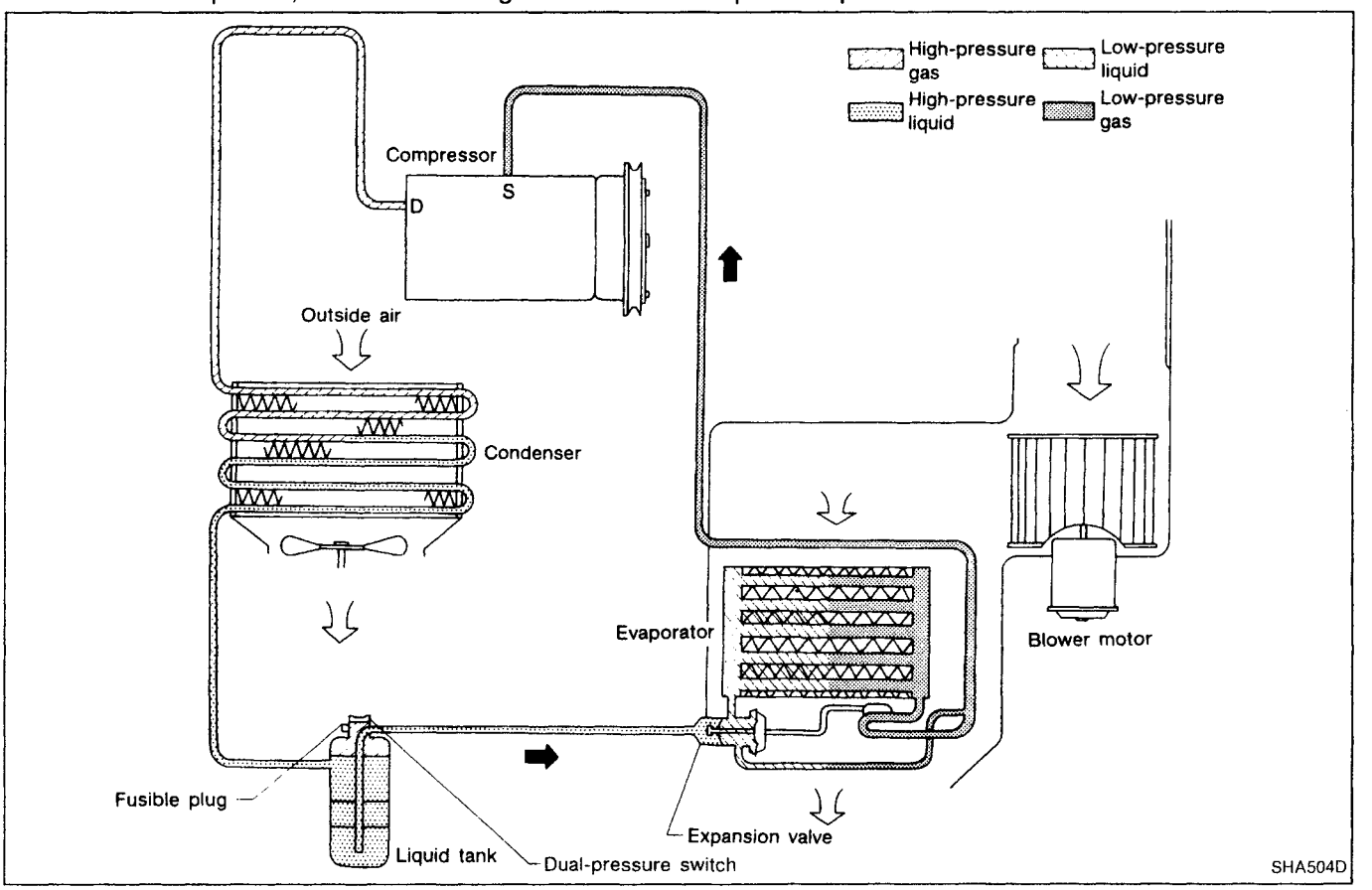

Simpo PDF Merge and Split Unregistered Version - http://www.simpopdf.com

Component Layout

SEC. 270•271•272•273

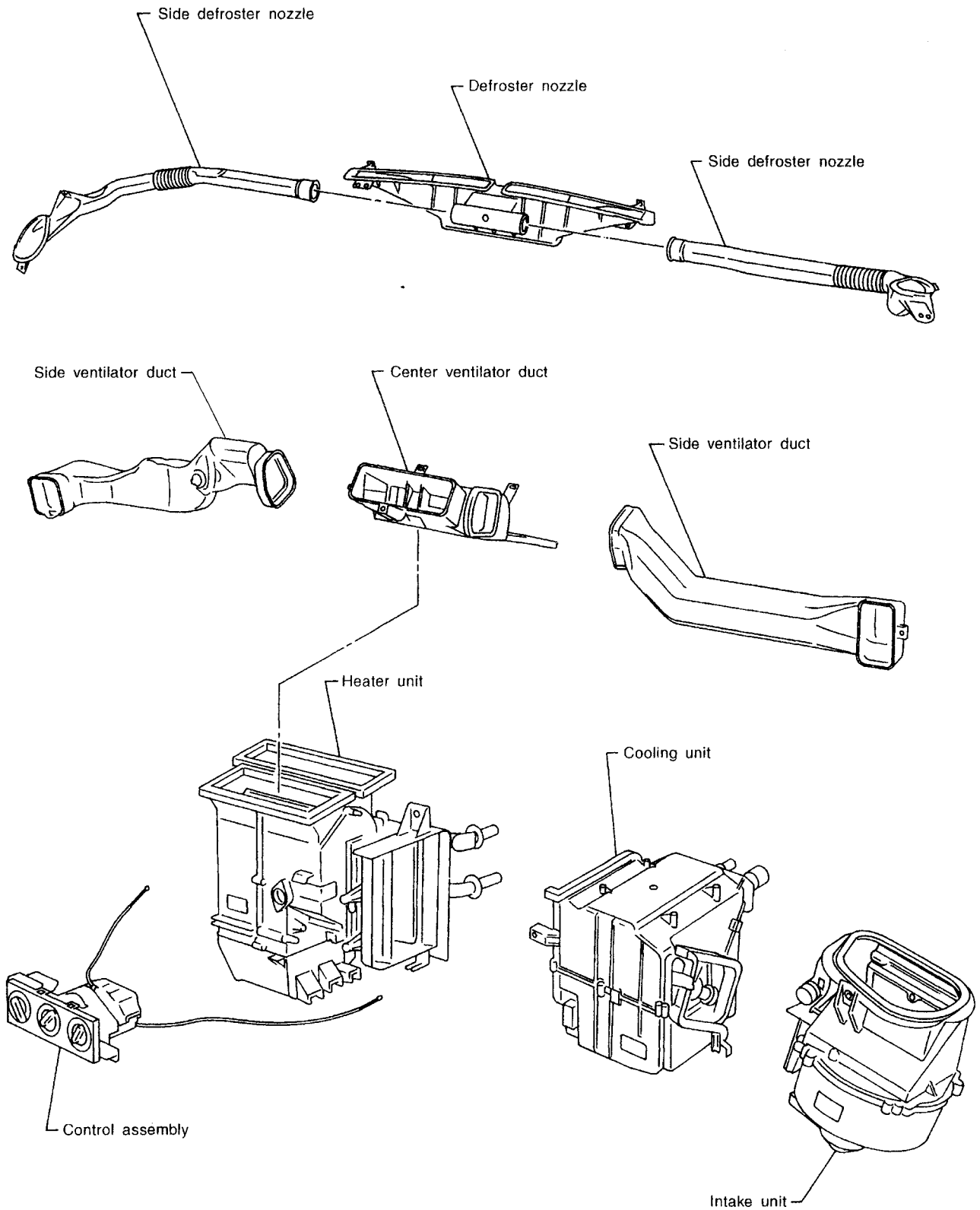

This illustration is for LHD models.
The layout for RHD models is symmetrically opposite to this layout.

RHA312F

Simpo PDF Merge and Split Unregistered Version - http://www.simpopdf.com

Discharge Air Flow

①: Ventilation ③: Defroster
②: Foot

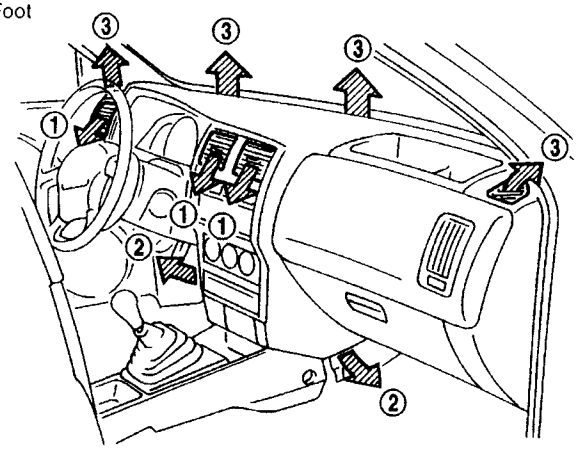

Ventilation
(switch "ON")

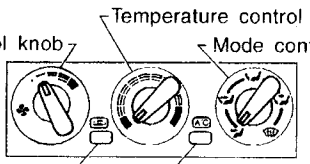

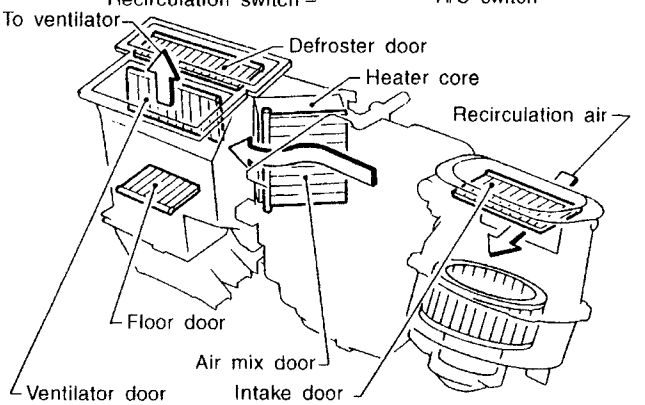

Bi-level
(switch "OFF")

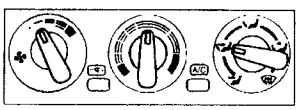

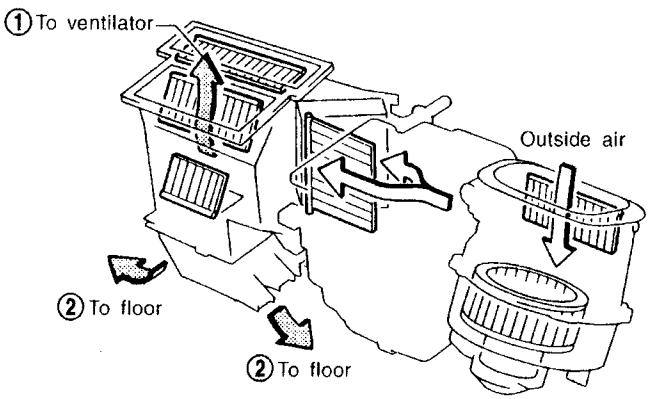

This illustration is for LHD models.
The layout for RHD models is symmetrically opposite.

Floor

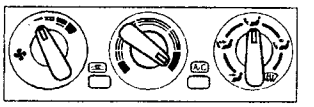

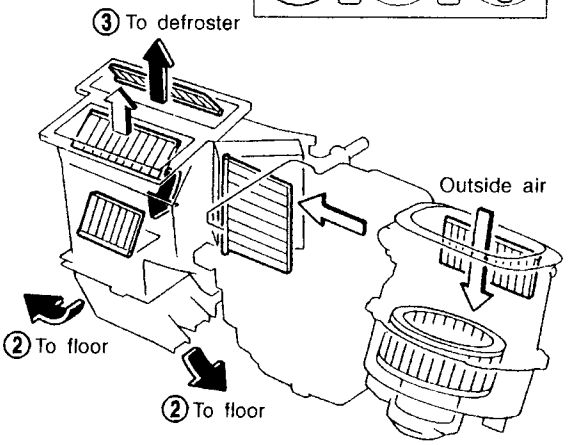

Defroster

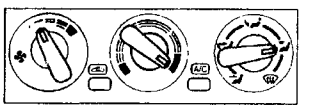

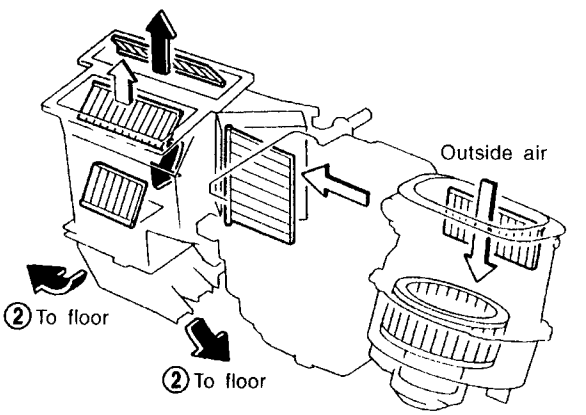

Floor and defroster

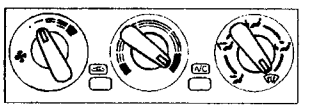

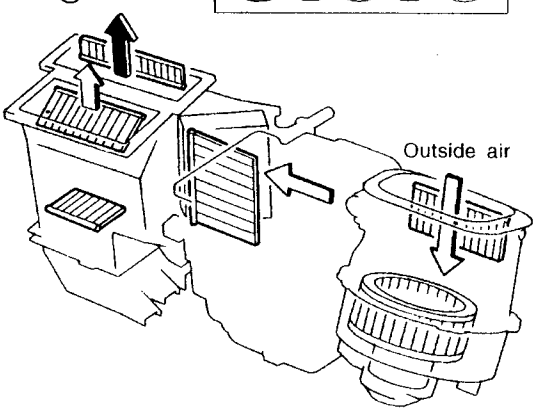

: Air passed through heater core
: Mixed air (+)
: Air not passed through heater core

RHA313F

Simpo PDF Merge and Split Unregistered Version - http://www.simpopdf.com

Control Operation

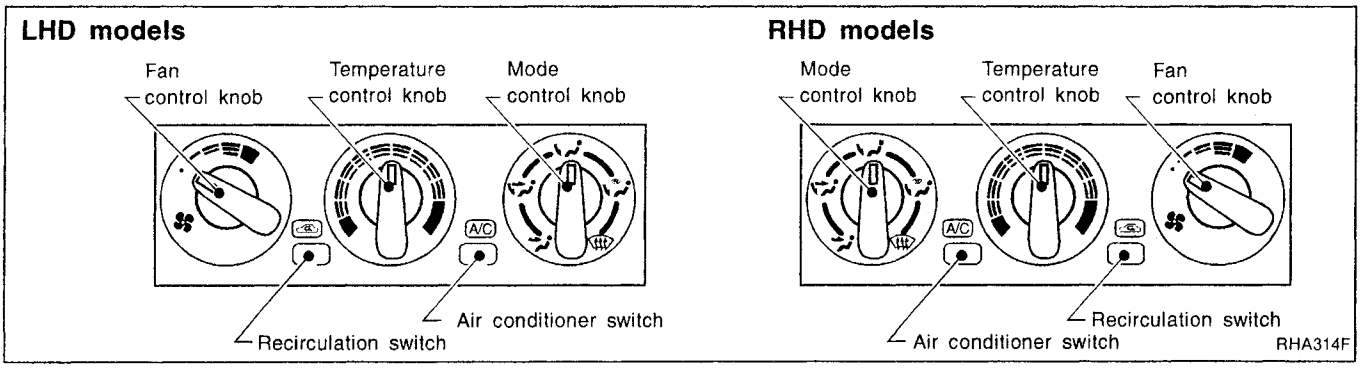

FAN CONTROL KNOB

This knob turns the fan ON and OFF, and controls fan speed.

MODE CONTROL KNOB

This knob controls the outlet air flow.

TEMPERATURE CONTROL KNOB

This knob allows adjustment of the temperature of the outlet air.

RECIRCULATION (REC) SWITCH

OFF position:
Outside air is drawn into the passenger compartment.
ON position:
Interior air is recirculated inside the vehicle.
The indicator lamp will also light.

AIR CONDITIONER SWITCH

The air conditioner switch controls the A/C system. When the switch is depressed with the fan ON, the compressor will turn ON. The indicator lamp will also light.

The air conditioner cooling function operates only when the engine is running.

HA

Simpo PDF Merge and Split Unregistered Version - http://www.simpopdf.com

Contents

How to Perform Trouble Diagnoses for Quick and Accurate Repair HA-15
Operational Check HA-16
Symptom Chart HA-18
Preliminary Check HA-20
PRELIMINARY CHECK 1
(A/C does not blow cold air.) HA-20
PRELIMINARY CHECK 2
(Air outlet does not change.) HA-21
PRELIMINARY CHECK 3
(Noise) HA-22
PRELIMINARY CHECK 4
(Insufficient heating) HA-23
Performance Test Diagnoses HA-24
INSUFFICIENT COOLING HA-24
Performance Chart HA-26
TEST CONDITION HA-26
TEST READING HA-26
Trouble Diagnoses for Abnormal Pressure HA-27
Harness Layout HA-31
Circuit Diagram — Air Conditioner HA-34
Wiring Diagram — HEATER — HA-36
Wiring Diagram — A/C — HA-38
Main Power Supply and Ground Circuit Check HA-49
Diagnostic Procedure 1
(SYMPTOM: Blower motor does not rotate.) HA-50
Diagnostic Procedure 2
(SYMPTOM: Intake door does not change.) HA-52
Diagnostic Procedure 3
(SYMPTOM: Magnet clutch does not operate when A/C switch and fan switch are ON.)
— For GA and SR engines HA-54
— For CD engine HA-59
Electrical Components Inspection HA-62
Control Linkage Adjustment HA-64
System Description HA-65

Simpo PDF Merge and Split Unregistered Version - http://www.simpopdf.com

How to Perform Trouble Diagnoses for Quick and Accurate Repair

WORK FLOW

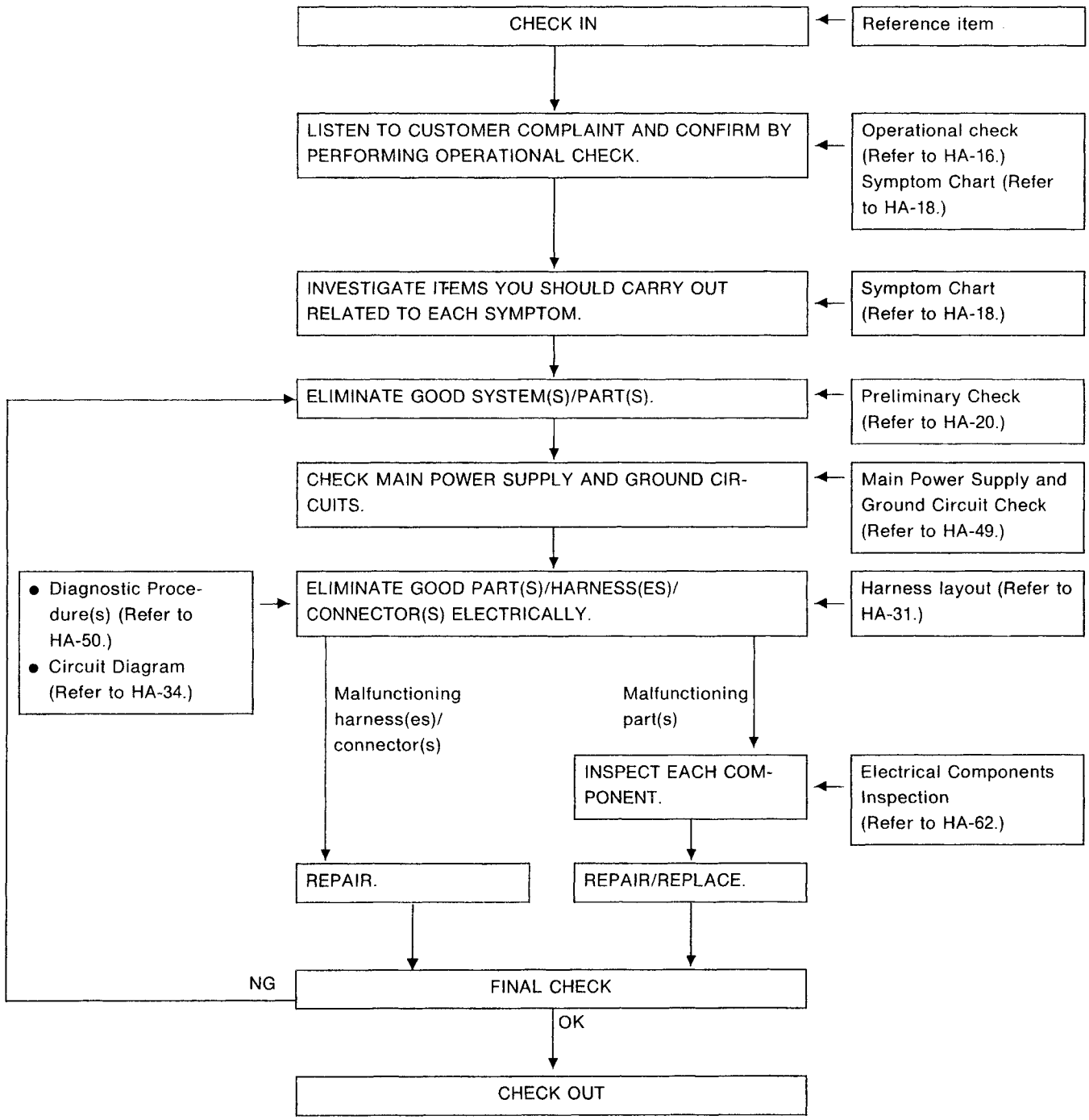

HA

Simpo PDF Merge and Split Unregistered Version - http://www.simpopdf.com

Operational Check

The purpose of the operational check is to confirm that the system operates as it should. The systems which are checked are the blower, mode (discharge air), intake air, temperature decrease, temperature increase.

CONDITIONS:

Engine running at normal operating temperature.

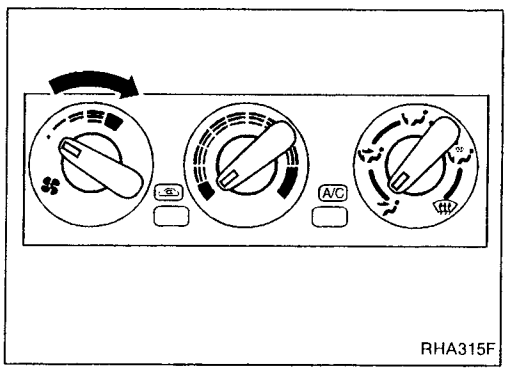

PROCEDURE:

1. Check blower

1) Turn fan control knob to 1-speed.
   Blower should operate on 1-speed.
2) Then turn fan control knob to 2-speed.
3) Continue checking blower speed until all four speeds are checked.
4) Leave blower on 4-speed.

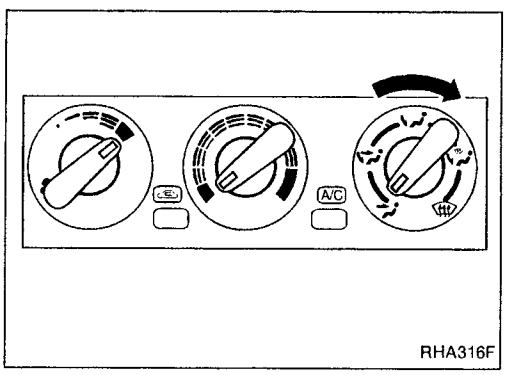

2. Check discharge air.

1) Turn mode control knob.

Discharge air flow

Switch mode/ indicator	Air outlet/distribution					
	RHD models			LHD models		
	Face	Foot	Defroster	Face	Foot	Defroster
	100%	–	–	100%	–	–
	60%	40%	–	60%	40%	–
	–	80%	20%	14%	65%	21%
	–	60%	40%	13%	57%	30%
	–	–	100%	–	–	100%

RHA317F

2) Confirm that discharge air comes out according to the air distribution table at left.
   Refer to "Discharge Air Flow" in "DESCRIPTION" (HA-12).

Simpo PDF Merge and Split Unregistered Version - http://www.simpopdf.com

Operational Check (Cont'd)

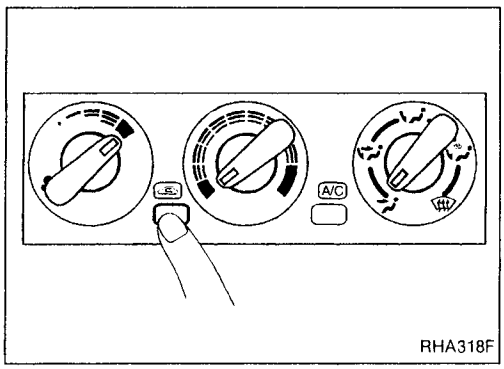

3. Check recirculation

1) Press recirculation switch.
   Recirculation indicator should light.
2) Listen for intake door position change (you should hear blower sound change slightly).

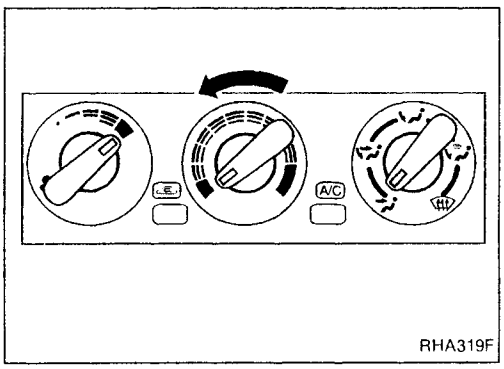

4. Check temperature decrease

1) Turn temperature control knob to full cold.
2) Check for cold air at discharge air outlets.

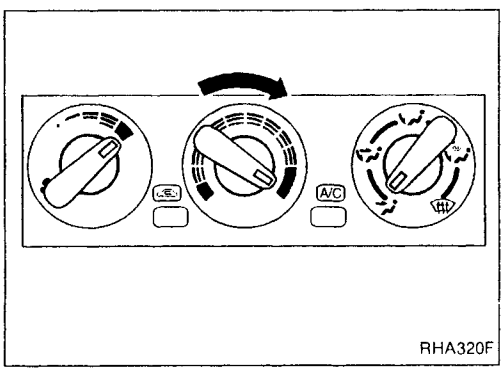

5. Check temperature increase

1) Turn temperature control knob to full hot.
2) Check for hot air at discharge air outlets.

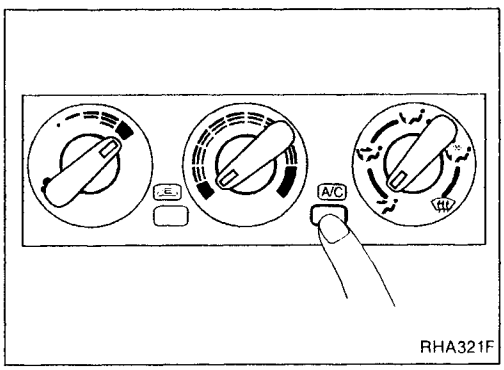

6. Check air conditioner switch

Turn fan control knob to the desired (1 to 4-speed) position and push the air conditioner switch to turn ON the air conditioner.
The indicator light should come on when air conditioner is ON.

Simpo PDF Merge and Split Unregistered Version - http://www.simpopdf.com

Symptom Chart

DIAGNOSTIC TABLE

PROCEDURE	Preliminary Check				Diagnostic Procedure			Main Power Supply and Ground Circuit Check		
REFERENCE PAGE	HA-20	HA-21	HA-22	HA-23	HA-50	HA-52	HA-54	HA-49	HA-49	HA-49
SYMPTOM	Preliminary check 1	Preliminary check 2	Preliminary check 3	Preliminary check 4	Diagnostic procedure 1	Diagnostic procedure 2	Diagnostic procedure 3	15A Fuses	7.5A fuses	Thermo control amp.
A/C does not blow cold air.	❶				○		○	○	○	○
Blower motor does not rotate.	❶				❷			○		
Insufficient heating				❶	○					
Air outlet does not change.		❶								
Intake door does not change.						❶			○	○
Magnet clutch does not operate when A/C switch and fan switch are ON.	❶						❷	○	○	○
Noise			❶							

❶, ❷: The number means checking order.
○ : As for checking order, refer to each flow chart. (It depends on malfunctioning portion.)

Simpo PDF Merge and Split Unregistered Version - http://www.simpopdf.com

Symptom Chart (Cont'd)

Electrical Components Inspection

Blower motor	Blower resistor	A/C switch	Recirculation switch	Fan switch	A/C relay	Thermo control amp.	Dual-pressure switch	Thermal protector / Compressor	ECM (ECCS control module), ECM (Engine control module)	Illumination system	Harness	—
HA-62	HA-63	HA-63	HA-63	HA-62	HA-64	HA-63	HA-64	HA-63	Refer to EC section	Refer to EL section	—	
○	○	○		○	○	○	○	○	○		○	
○	○			○							○	
											○	
											○	
			○								○	
		○		○	○	○	○	○	○		○	

HA

Simpo PDF Merge and Split Unregistered Version - http://www.simpopdf.com

Preliminary Check

PRELIMINARY CHECK 1

A/C does not blow cold air.

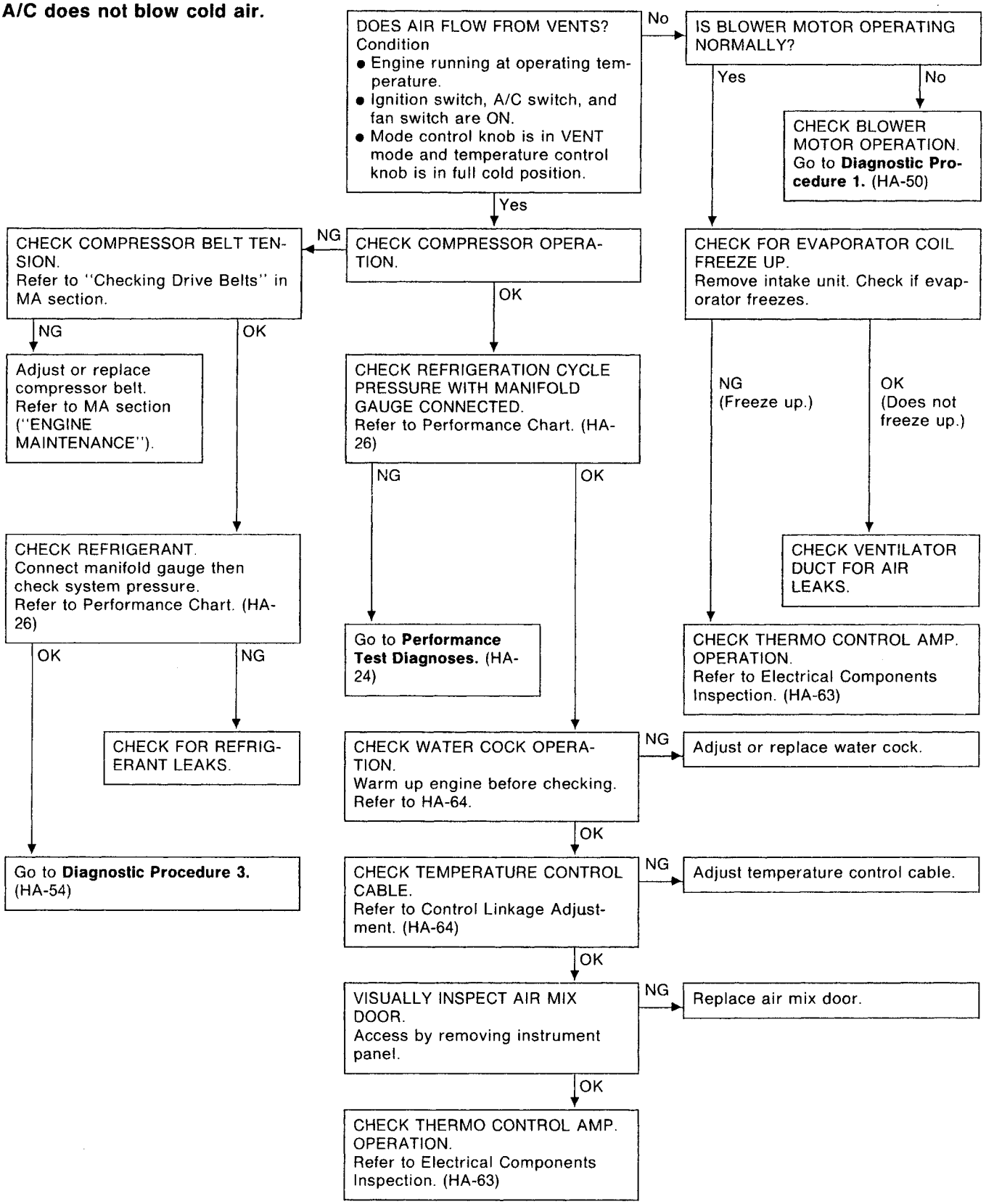

Simpo PDF Merge and Split Unregistered Version - http://www.simpopdf.com

Preliminary Check (Cont'd)

PRELIMINARY CHECK 2

Air outlet does not change.

TURN IGNITION SWITCH AND FAN SWITCH ON. DOES AIR COME OUT NORMALLY FROM EACH DUCT WHEN EACH MODE SWITCH IS PUSHED?

No → Adjust mode control cable. Refer to HA-64.

Discharge air flow

Switch mode/ indicator	Air outlet/distribution					
	RHD models			LHD models		
	Face	Foot	Defroster	Face	Foot	Defroster
	100%	–	–	100%	–	–
	60%	40%	–	60%	40%	–
	–	80%	20%	14%	65%	21%
	–	60%	40%	13%	57%	30%
	–	–	100%	–	–	100%

Yes → INSPECTION END

HA

Simpo PDF Merge and Split Unregistered Version - http://www.simpopdf.com

Preliminary Check (Cont'd)

PRELIMINARY CHECK 3

Noise

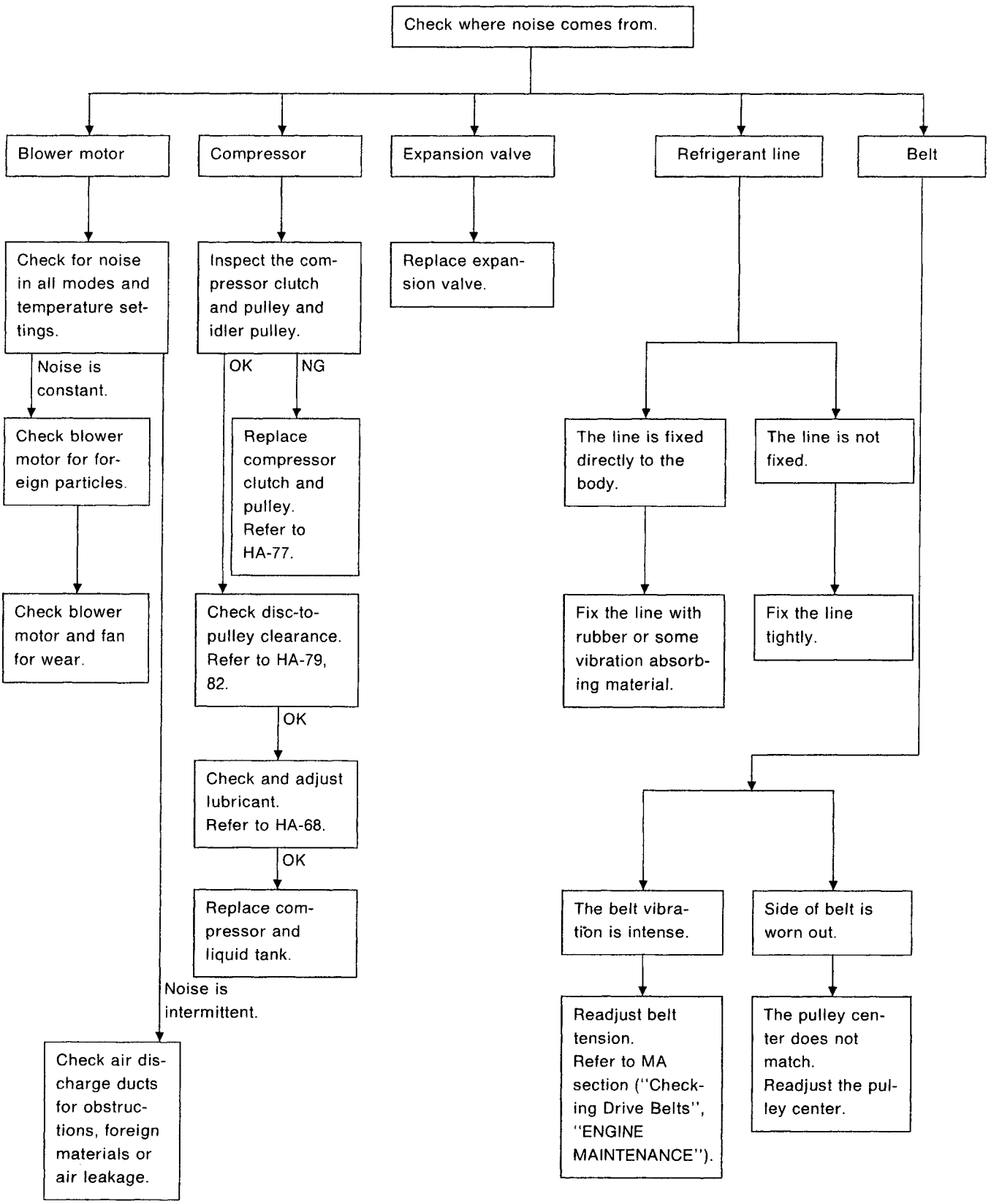

Simpo PDF Merge and Split Unregistered Version - http://www.simpopdf.com

Preliminary Check (Cont'd)

PRELIMINARY CHECK 4

Insufficient heating

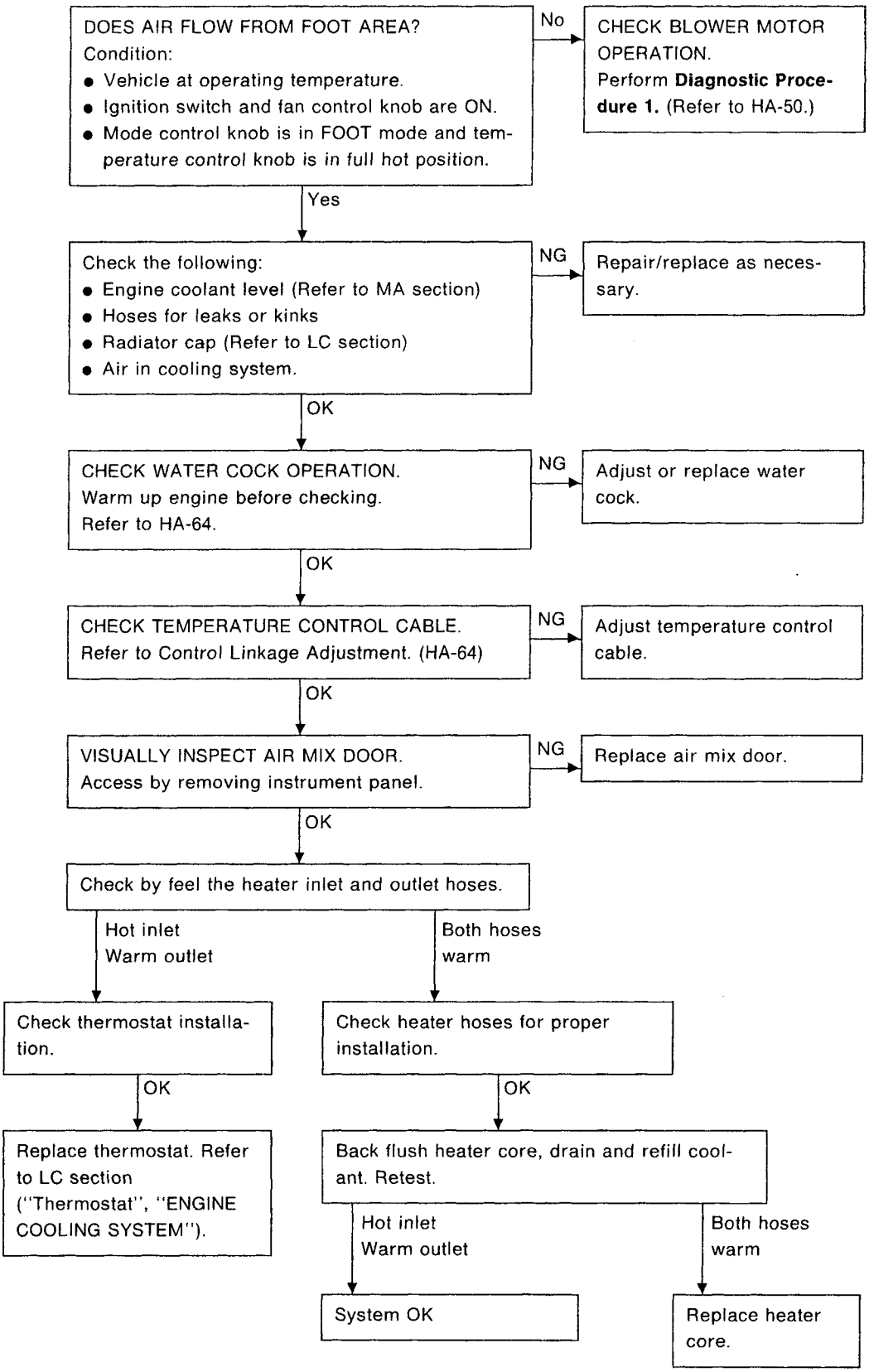

Simpo PDF Merge and Split Unregistered Version - http://www.simpopdf.com

Performance Test Diagnoses

INSUFFICIENT COOLING

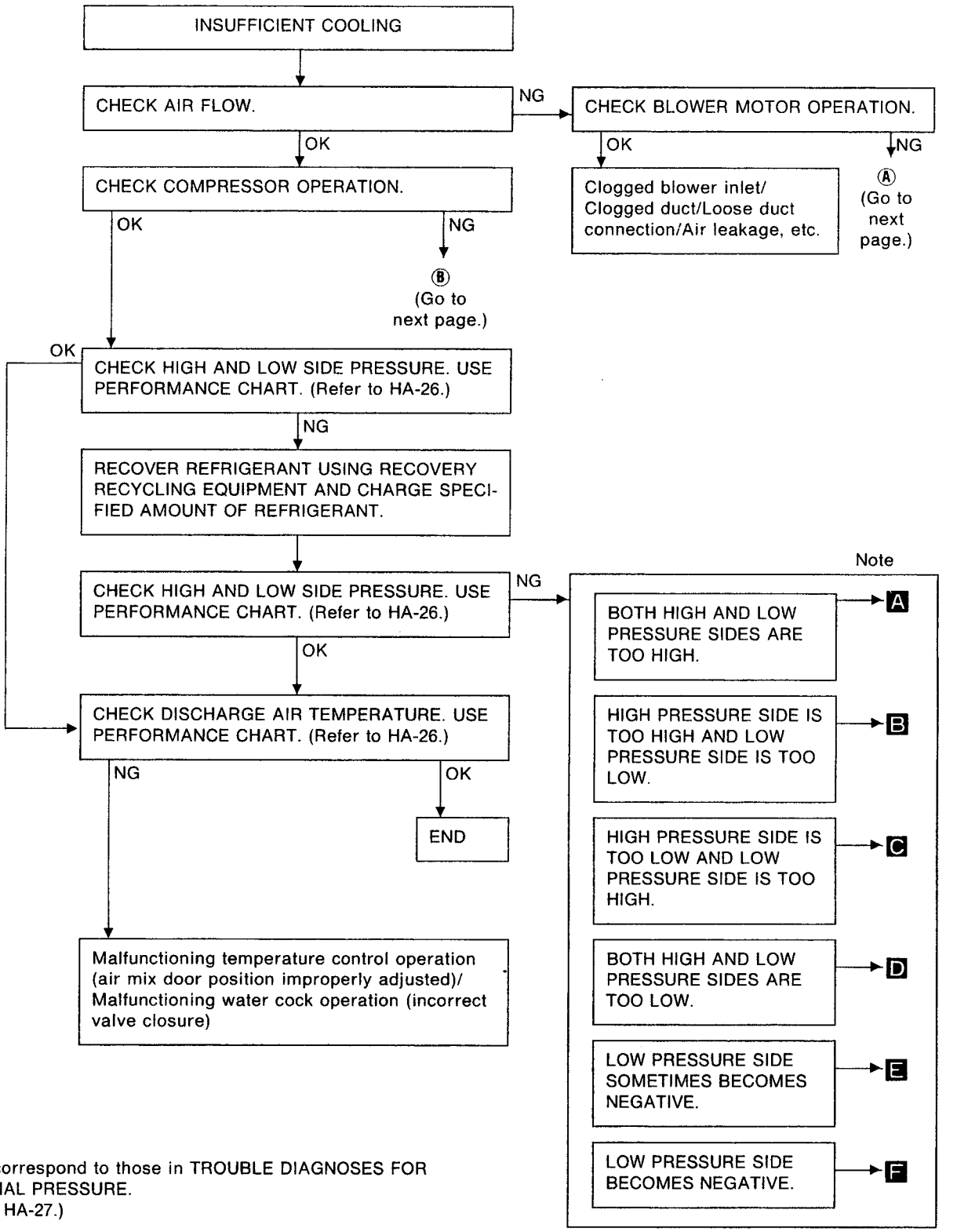

Note: A-F correspond to those in TROUBLE DIAGNOSES FOR ABNORMAL PRESSURE.
(Refer to HA-27.)

Simpo PDF Merge and Split Unregistered Version - http://www.simpopdf.com

Performance Test Diagnoses (Cont'd)

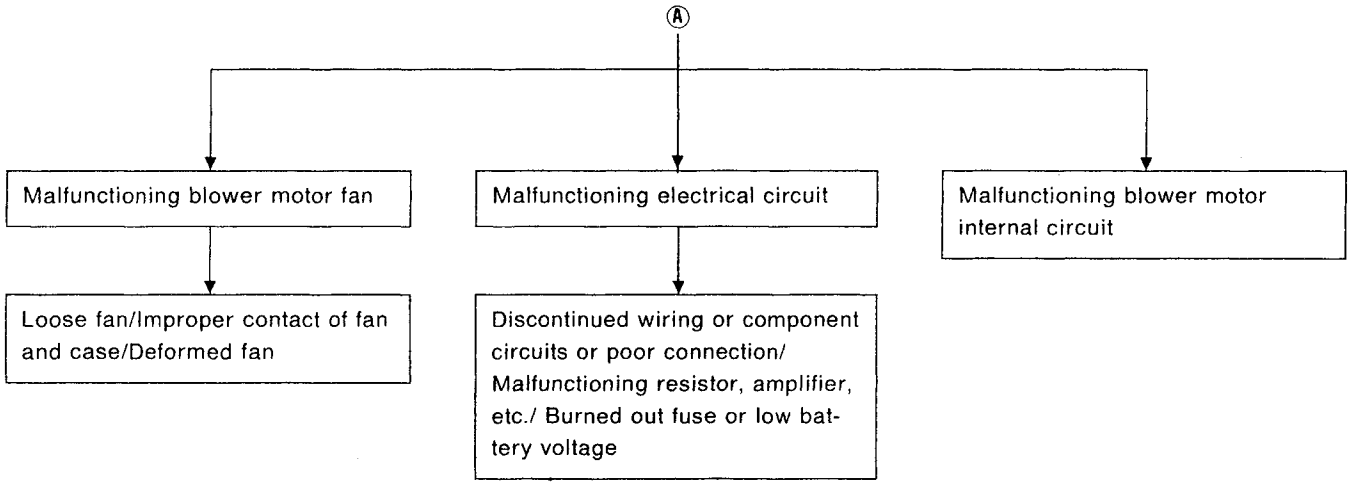

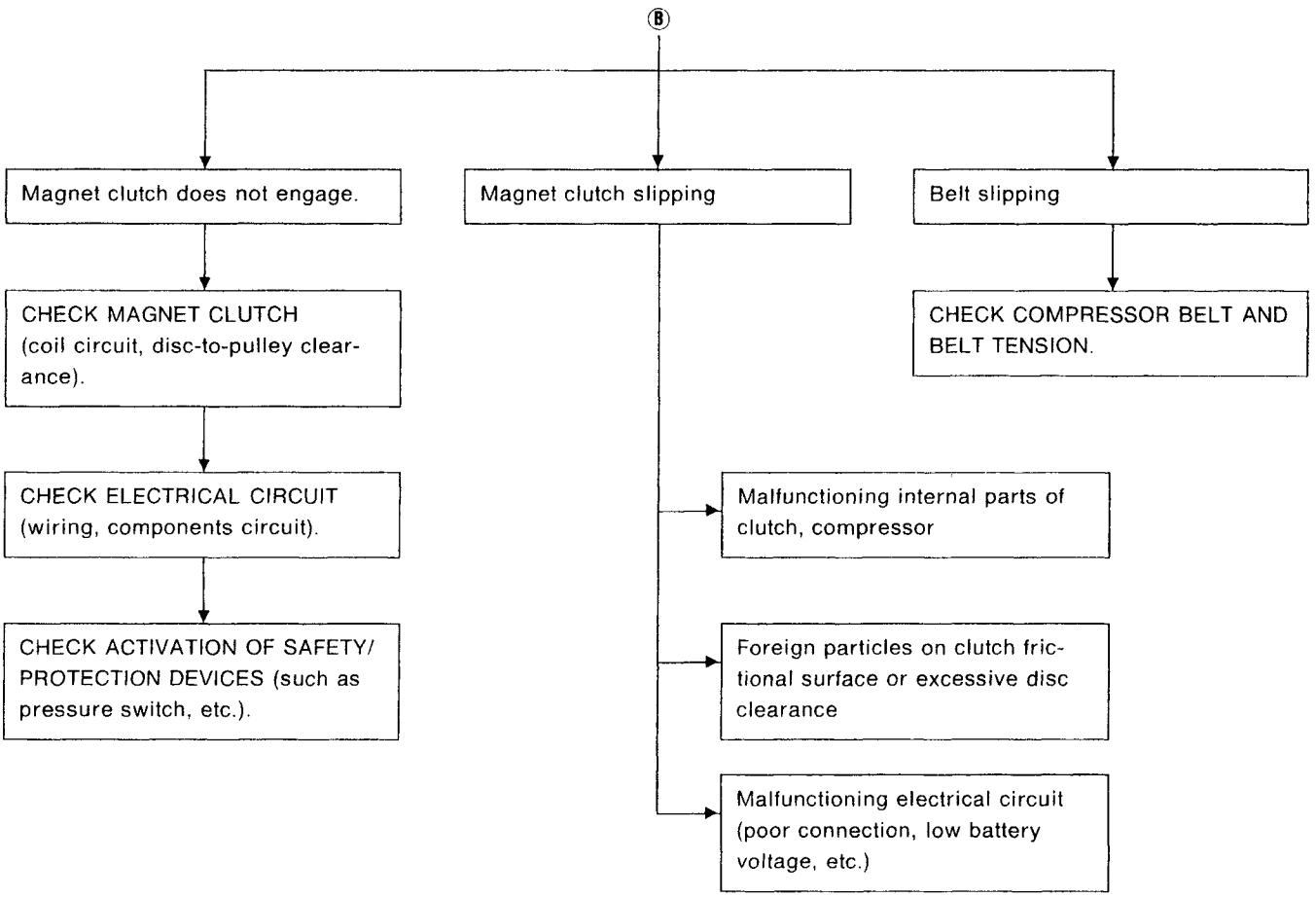

HA

Simpo PDF Merge and Split Unregistered Version - http://www.simpopdf.com

Performance Chart

TEST CONDITION

Testing must be performed as follows:

Vehicle location: Indoors or in the shade (in a well-ventilated place)
Doors: Closed
Door window: Open
Hood: Open
TEMP.: Max. COLD
Discharge Air: Face Vent
REC switch: (Recirculation) set
FAN speed: High speed
Engine speed: Idle speed
Operate the air conditioning system for 10 minutes before taking measurements.

TEST READING

Recirculating-to-discharge air temperature table

Inside air (Recirculating air) at blower assembly inlet		Discharge air temperature at center ventilator °C (°F)
Relative humidity %	Air temperature °C (°F)	
50 - 60	25 (77)	11.4 - 13.6 (53 - 56)
	30 (86)	15.7 - 18.3 (60 - 65)
	35 (95)	20.5 - 23.8 (69 - 75)
	40 (104)	26.0 - 30.8 (79 - 87)
60 - 70	25 (77)	13.6 - 16.0 (56 - 61)
	30 (86)	18.3 - 21.1 (65 - 70)
	35 (95)	23.8 - 27.4 (75 - 81)
	40 (104)	30.8 - 36.0 (87 - 97)

Ambient air temperature-to-operating pressure table

Ambient air		High-pressure (Discharge side) kPa (bar, kg/cm^2, psi)	Low-pressure (Suction side) kPa (bar, kg/cm^2, psi)
Relative humidity %	Air temperature °C (°F)		
50 - 70	25 (77)	892 - 1,138 (8.92 - 11.38, 9.1 - 11.6, 129 - 165)	118 - 226 (1.18 - 2.26, 1.2 - 2.3, 17 - 33)
	30 (86)	1,108 - 1,393 (11.08 - 13.93, 11.3 - 14.2, 161 - 202)	137 - 265 (1.37 - 2.65, 1.4 - 2.7, 20 - 38)
	35 (95)	1,344 - 1,677 (13.44 - 16.77, 13.7 - 17.1, 195 - 243)	177 - 314 (1.77 - 3.14, 1.8 - 3.2, 26 - 46)
	40 (104)	1,589 - 1,971 (15.89 - 19.71, 16.2 - 20.1, 230 - 286)	226 - 373 (2.26 - 3.73, 2.3 - 3.8, 33 - 54)

Simpo PDF Merge and Split Unregistered Version - http://www.simpopdf.com

Trouble Diagnoses for Abnormal Pressure

Whenever system's high and/or low side pressure is abnormal, diagnose using a manifold gauge. The marker above the gauge scale in the following tables indicates the standard (normal) pressure range. Since the standard (normal) pressure, however, differs from vehicle to vehicle, refer to HA-26 ("Ambient air temperature-to-operating pressure table").

Gauge indication	Refrigerant cycle	Probable cause	Corrective action
Both high and low-pressure sides are too high. A 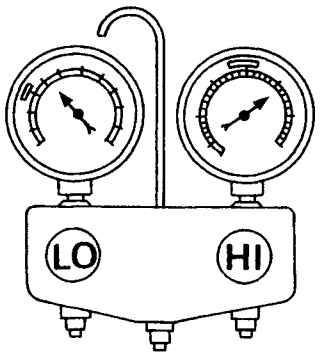 AC359A	• Pressure is reduced soon after water is splashed on condenser.	Excessive refrigerant charge in refrigeration cycle	Reduce refrigerant until specified pressure is obtained.
	Air suction by cooling fan is insufficient.	Insufficient condenser cooling performance ↓ ① Condenser fins are clogged. ② Improper fan rotation of cooling fan	• Clean condenser. • Check and repair cooling fan as necessary.
	• Low-pressure pipe is not cold. • When compressor is stopped high-pressure value quickly drops by approximately 196 kPa (2.0 bar, 2 kg/cm^2, 28 psi). It then decreases gradually thereafter.	Poor heat exchange in condenser (After compressor operation stops, high pressure decreases too slowly.) ↓ Air in refrigeration cycle	Evacuate repeatedly and recharge system.
	Engine tends to overheat.	Engine cooling systems malfunction.	Check and repair each engine cooling system.
	• An area of the low-pressure pipe is colder than areas near the evaporator outlet. • Plates are sometimes covered with frost.	• Excessive liquid refrigerant on low-pressure side • Excessive refrigerant discharge flow • Expansion valve is open a little compared with the specification. ↓ ① Improper thermal valve installation ② Improper expansion valve adjustment	Replace expansion valve.

Simpo PDF Merge and Split Unregistered Version - http://www.simpopdf.com

Trouble Diagnoses for Abnormal Pressure (Cont'd)

Gauge indication	Refrigerant cycle	Probable cause	Corrective action
High-pressure side is too high and low-pressure side is too low. B 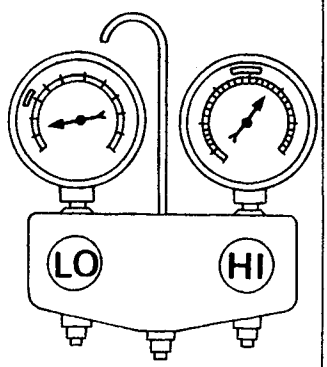 AC360A	Upper side of condenser and high-pressure side are hot, however, liquid tank is not so hot.	High-pressure tube or parts located between compressor and condenser are clogged or crushed.	• Check and repair or replace malfunctioning parts. • Check lubricant for contamination.
High-pressure side is too low and low-pressure side is too high. C 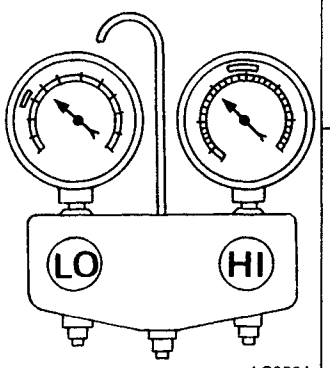 AC356A	High and low-pressure sides become equal soon after compressor operation stops.	Compressor pressure operation is improper. ↓ Damaged inside compressor packings	Replace compressor.
	No temperature difference between high and low-pressure sides	Compressor pressure operation is improper. ↓ Damaged inside compressor packings	Replace compressor.
Both high- and low-pressure sides are too low. D 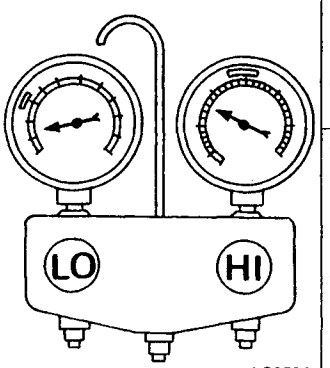 AC353A	• There is a big temperature difference between liquid tank outlet and inlet. Outlet temperature is extremely low. • Liquid tank inlet and expansion valve are frosted.	Liquid tank inside is clogged a little.	• Replace liquid tank. • Check lubricant for contamination.
	• Temperature of expansion valve inlet is extremely low as compared with areas near liquid tank. • Expansion valve inlet may be frosted. • Temperature difference occurs somewhere in high-pressure side	High-pressure pipe located between liquid tank and expansion valve is clogged.	• Check and repair malfunctioning parts. • Check lubricant for contamination.

Simpo PDF Merge and Split Unregistered Version - http://www.simpopdf.com

Trouble Diagnoses for Abnormal Pressure (Cont'd)

Gauge indication	Refrigerant cycle	Probable cause	Corrective action
Both high- and low-pressure sides are too low. D 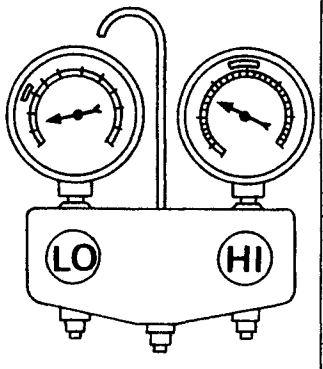 AC353A	There is a big temperature difference between expansion valve inlet and outlet while the valve itself is frosted.	Expansion valve closes a little compared with the specification. ↓ ① Improper expansion valve adjustment ② Malfunctioning thermal valve ③ Outlet and inlet may be clogged.	• Remove foreign particles by using compressed air. • Check lubricant for contamination.
	An area of the low-pressure pipe is colder than areas near the evaporator outlet.	Low-pressure pipe is clogged or crushed.	• Check and repair malfunctioning parts. • Check lubricant for contamination.
	Air flow volume is not enough or is too low.	Compressor pressure operation is improper. ↓ Damaged inside compressor packings	Replace compressor.
Low-pressure side sometimes becomes negative. E 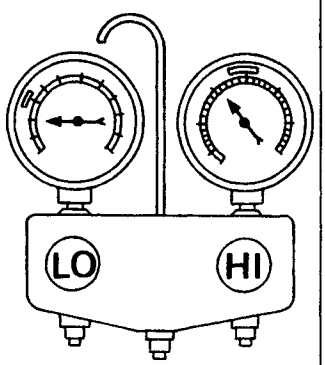 AC354A	• Air conditioning system does not function and does not cyclically cool the compartment air. • The system constantly functions for a certain period of time after compressor is stopped and restarted.	Refrigerant does not discharge cyclically. ↓ Moisture is frozen at expansion valve outlet and inlet. ↓ Water is mixed with refrigerant.	• Drain water from refrigerant or replace refrigerant. • Replace liquid tank.

HA

Simpo PDF Merge and Split Unregistered Version - http://www.simpopdf.com

Trouble Diagnoses for Abnormal Pressure (Cont'd)

Gauge indication	Refrigerant cycle	Probable cause	Corrective action
Low-pressure side becomes negative. F 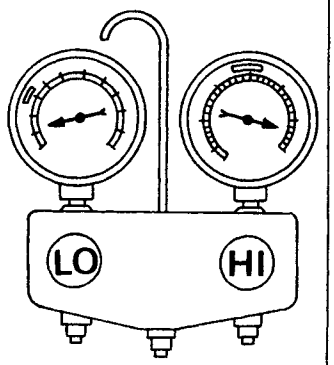 AC362A	Liquid tank or front/rear side of expansion valve's pipe is frosted or dewed.	High-pressure side is closed and refrigerant does not flow. ↓ Expansion valve or liquid tank is frosted.	Leave the system at rest until no frost is present. Start it again to check whether or not the problem is caused by water or foreign particles. ● If water is the cause, initially cooling is okay. Then the water freezes, causing a blockage. Drain water from refrigerant or replace refrigerant. ● If due to foreign particles, remove expansion valve and remove the particles with dry and compressed air (not shop air). ● If either of the above methods cannot correct the problem, replace expansion valve. ● Replace liquid tank. ● Check lubricant for contamination.

Simpo PDF Merge and Split Unregistered Version - http://www.simpopdf.com

Harness Layout

ENGINE COMPARTMENT

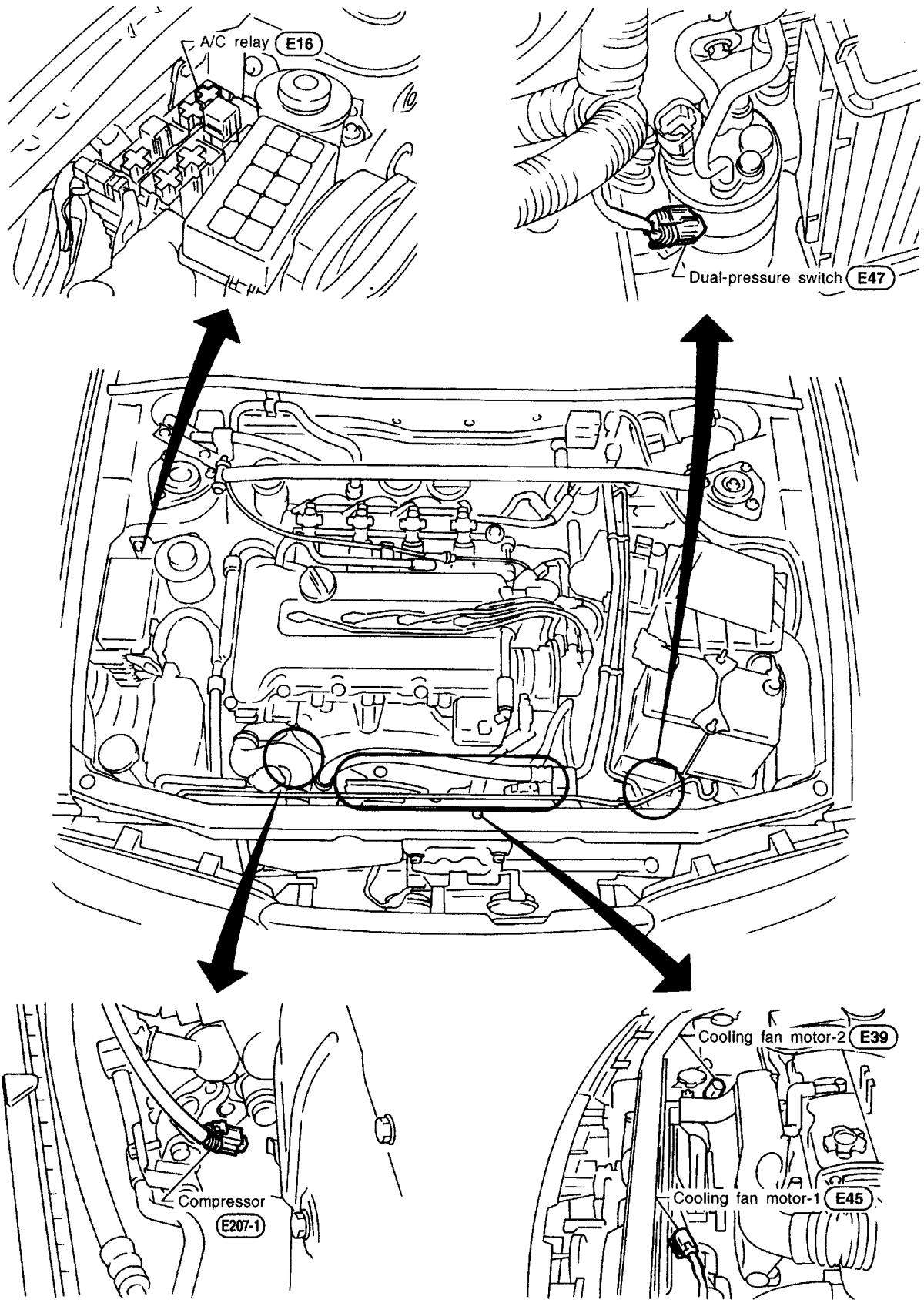

RHA322F

Simpo PDF Merge and Split Unregistered Version - http://www.simpopdf.com

Harness Layout (Cont'd)

PASSENGER COMPARTMENT

RHD models

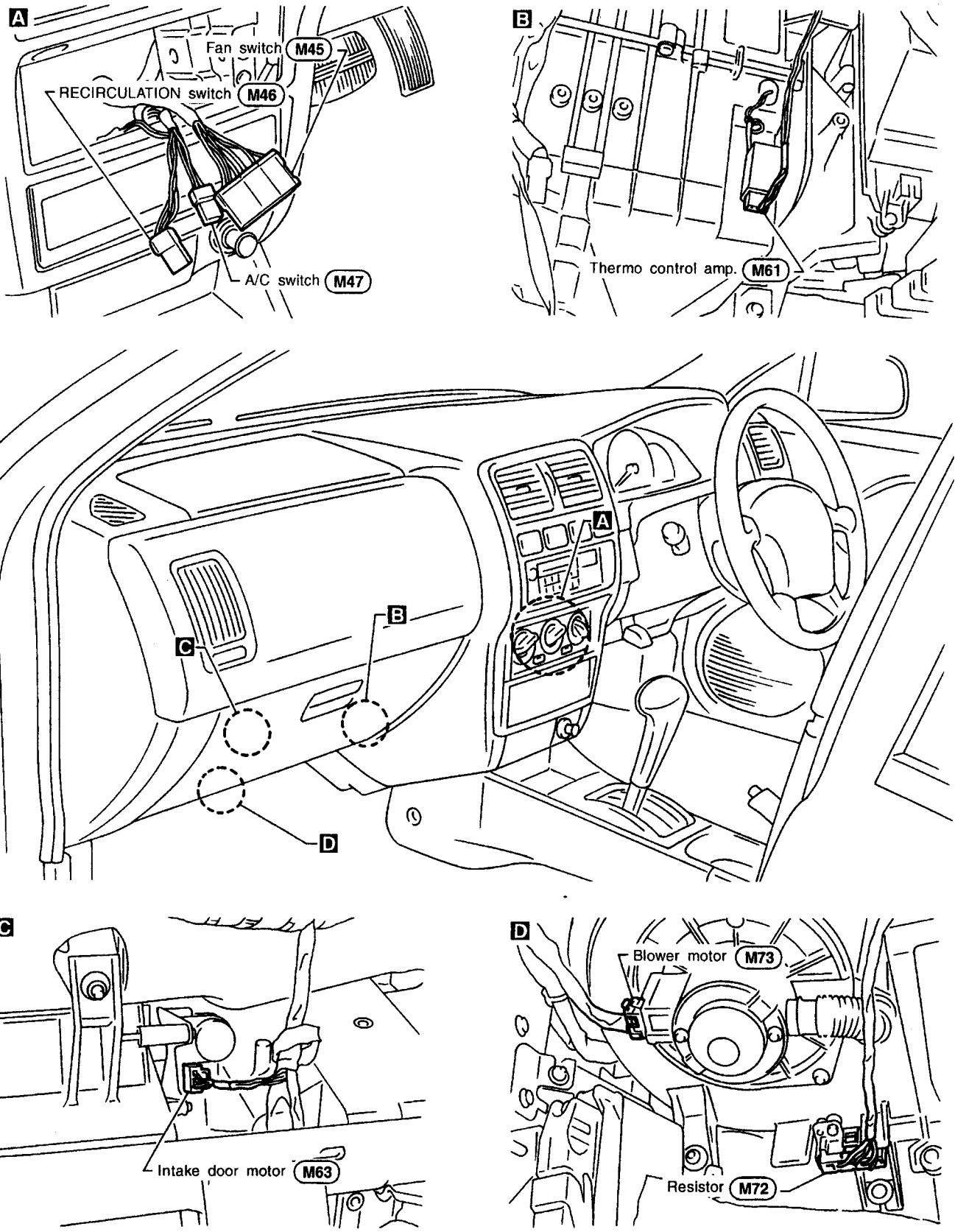

RHA447F

Simpo PDF Merge and Split Unregistered Version - http://www.simpopdf.com

Harness Layout (Cont'd)

LHD models

A

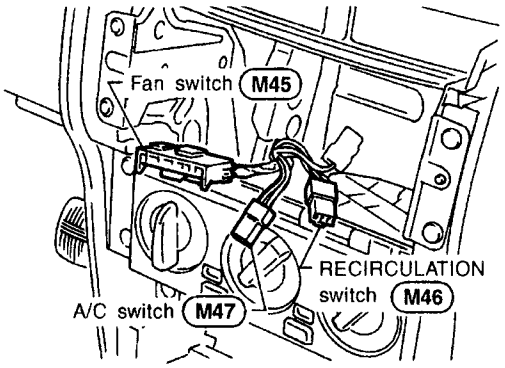

B

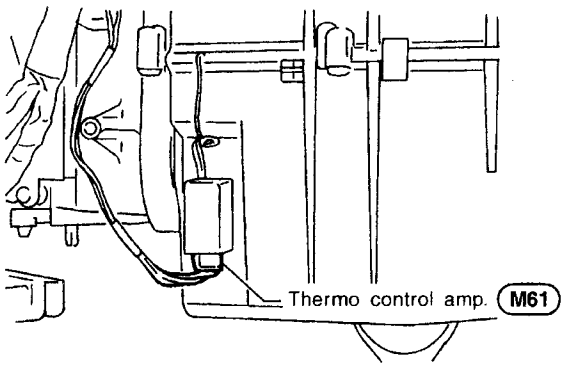

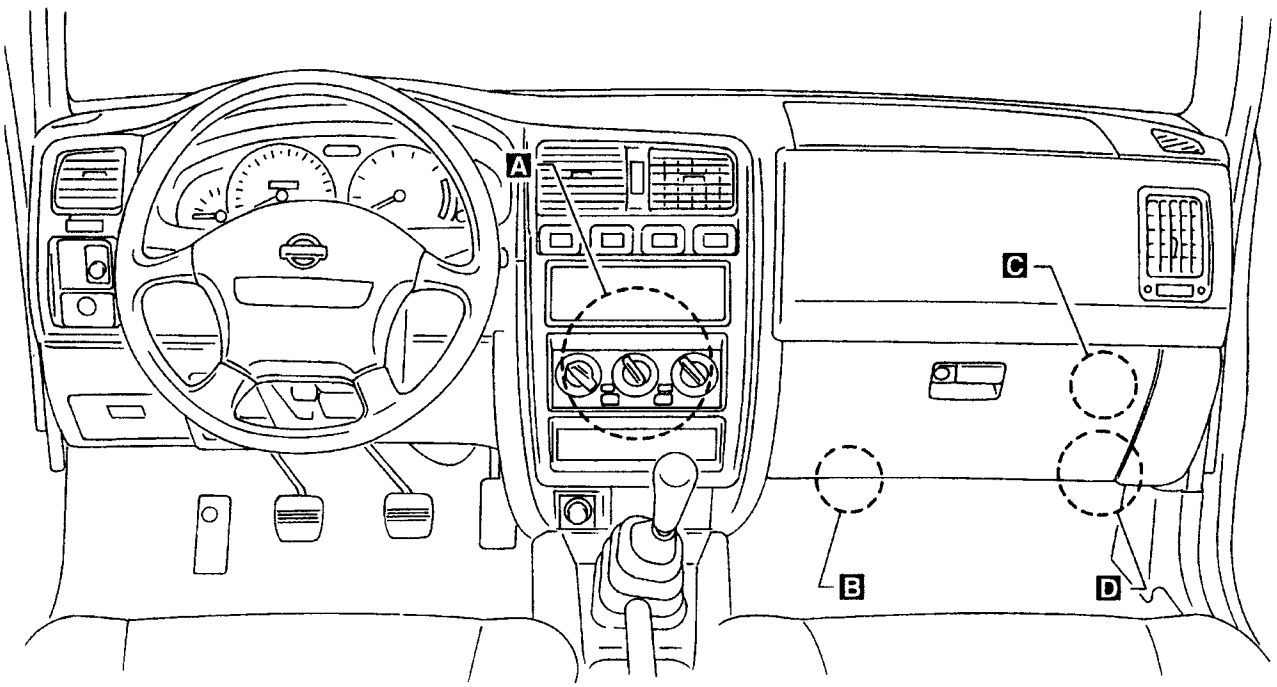

C

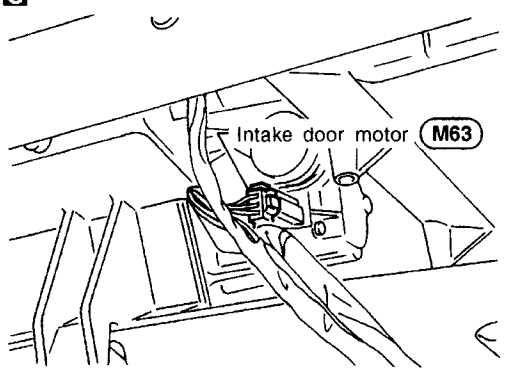

D

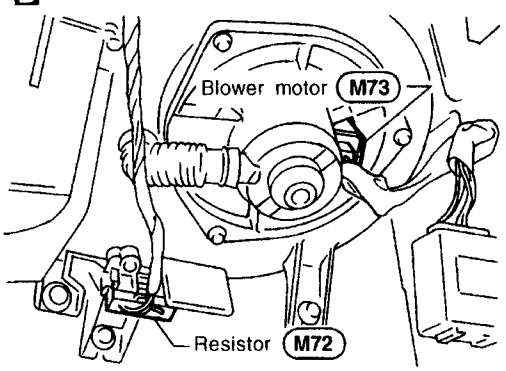

HA

RHA324F

Simpo PDF Merge and Split Unregistered Version - http://www.simpopdf.com

Circuit Diagram — Air Conditioner

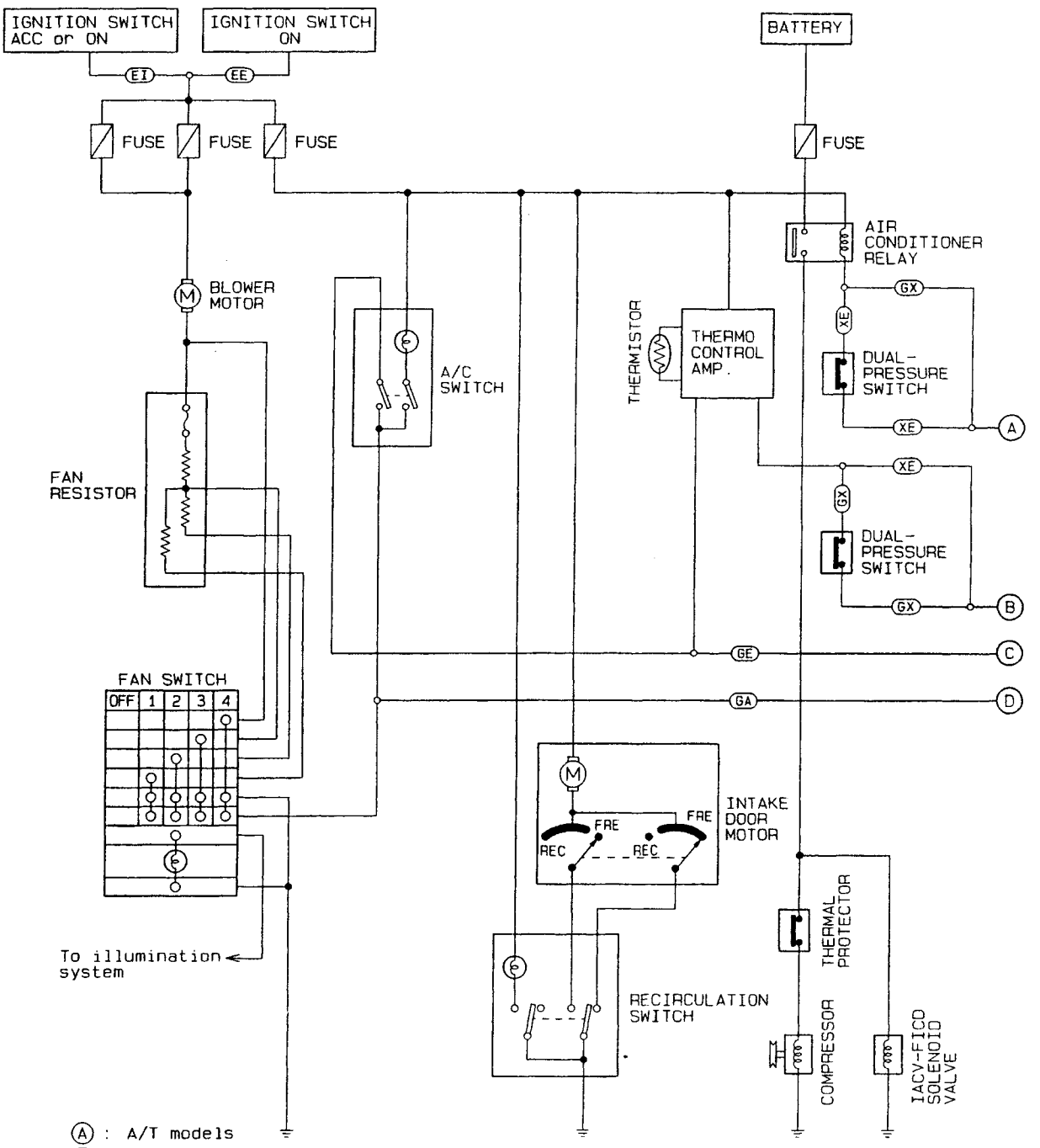

(A) : A/T models
(M) : M/T models
(EI) : For Europe and Israel
(EE) : Except (EI)
(GA) : GA engine models
(GE) : Except for Europe, Israel and Australia
(GX) : GA engine for Europe, Israel and Australia and SR engine
(XE) : Except (GX)
(LA) : LHD A/T models for Europe without daytime light system
(NA) : Except (LA)
*1 : (EI) 41, (EE) 44

HHA001

Simpo PDF Merge and Split Unregistered Version - http://www.simpopdf.com

Circuit Diagram — Air Conditioner (Cont'd)

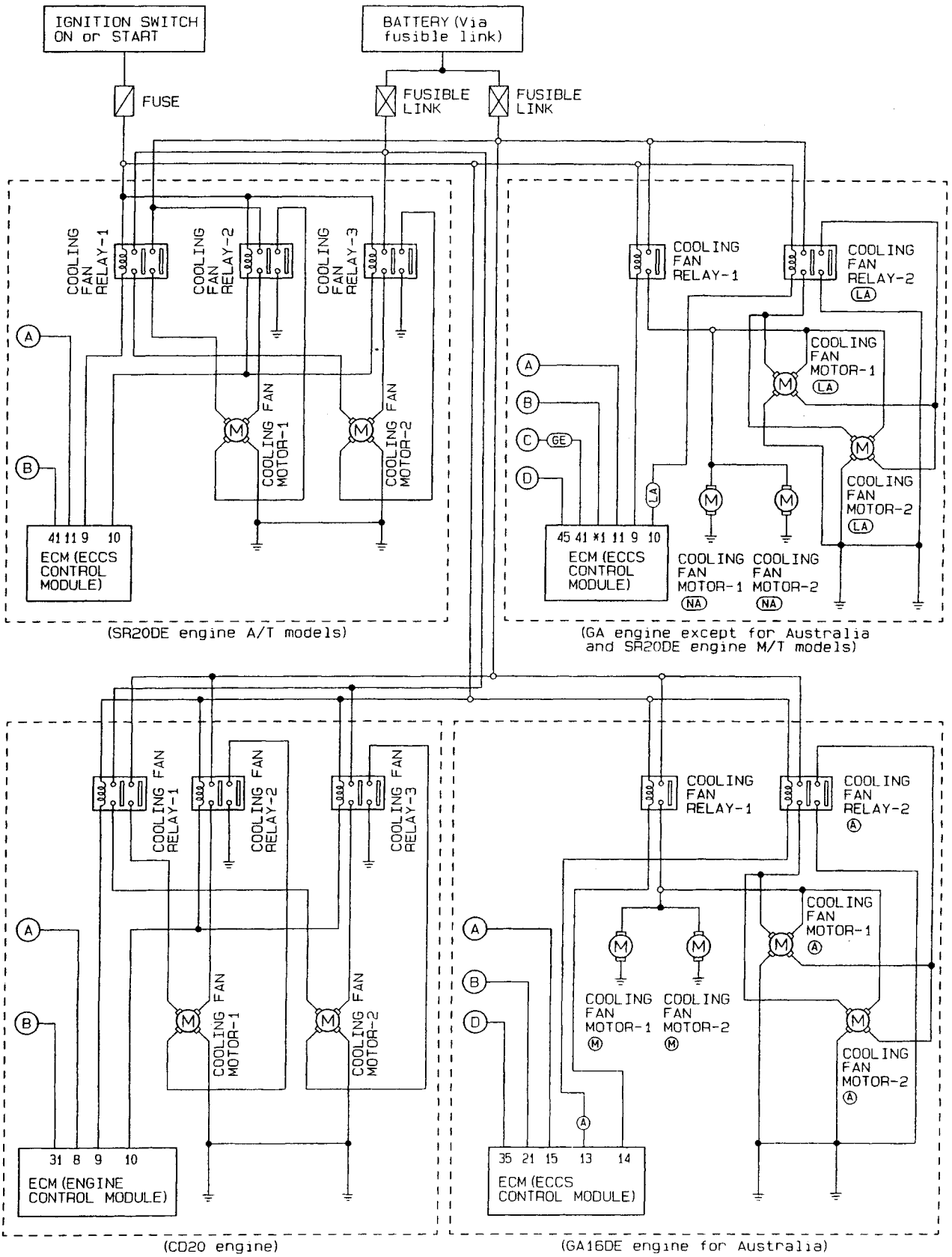

HA

HHA014

Simpo PDF Merge and Split Unregistered Version - http://www.simpopdf.com

Wiring Diagram — HEATER —

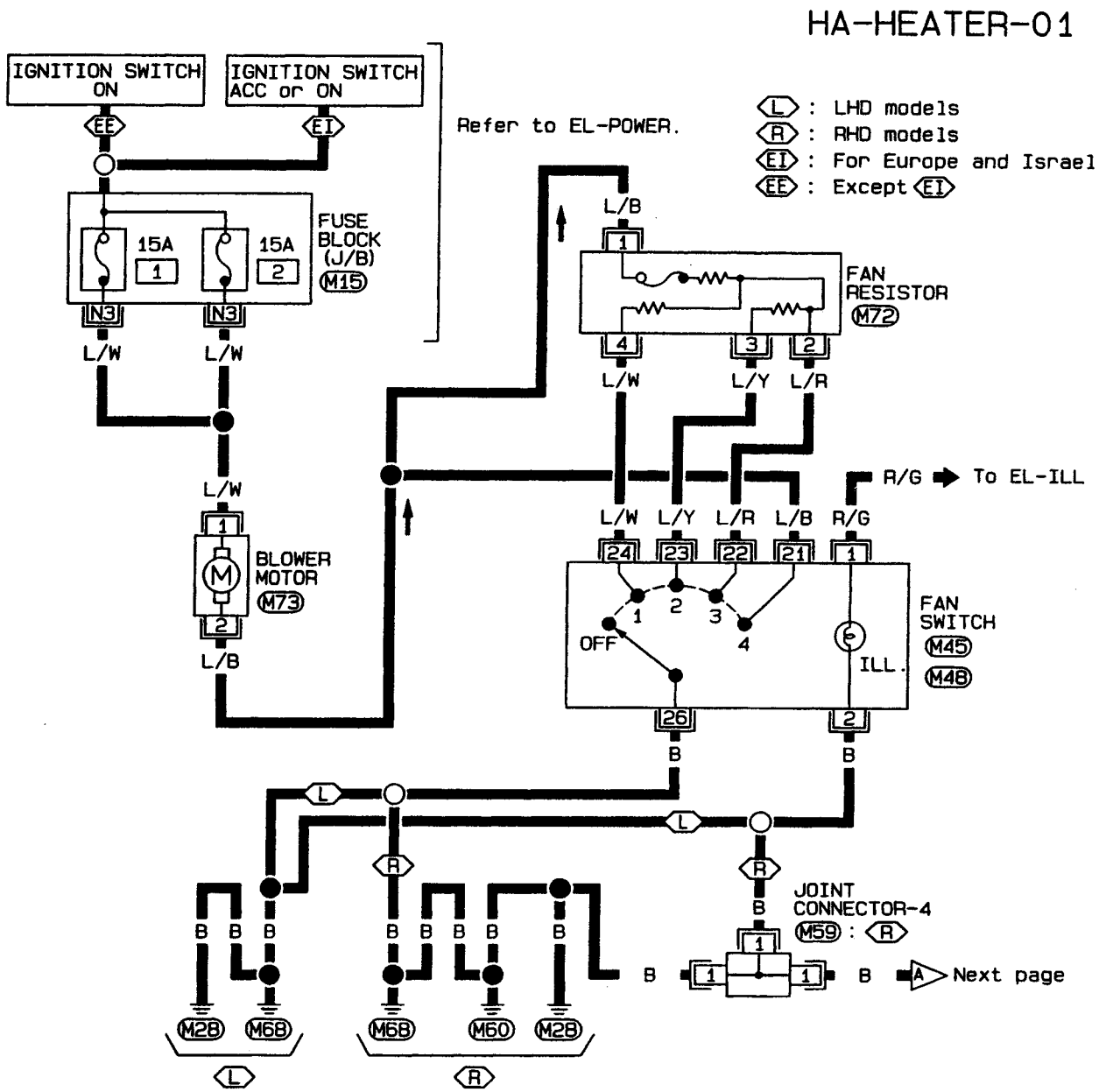

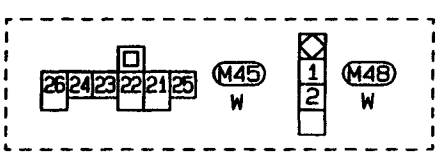

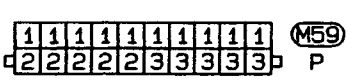





Refer to last page (Foldout page).

M15

HHA012

Simpo PDF Merge and Split Unregistered Version - http://www.simpopdf.com

Wiring Diagram — HEATER — (Cont'd)

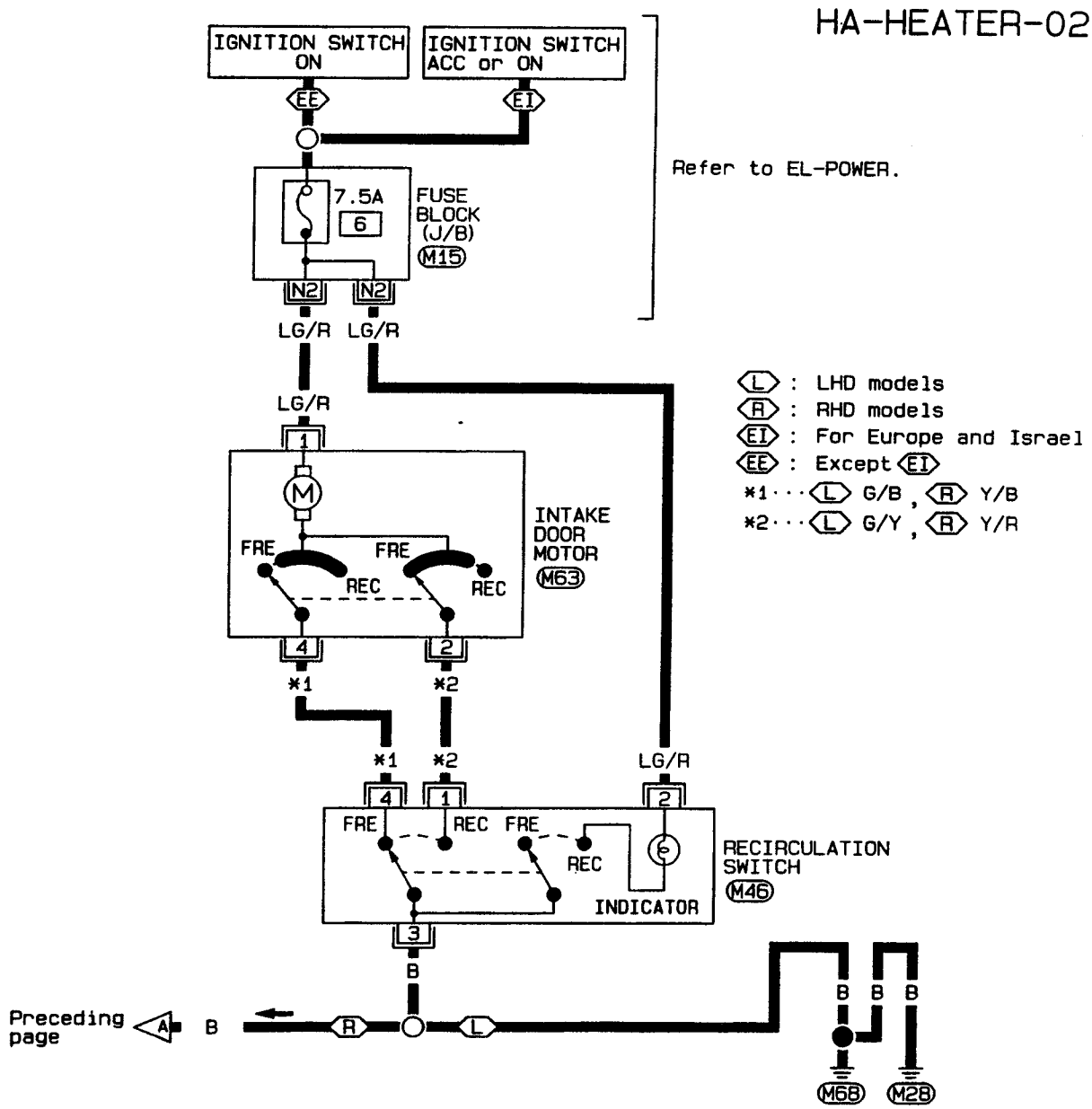

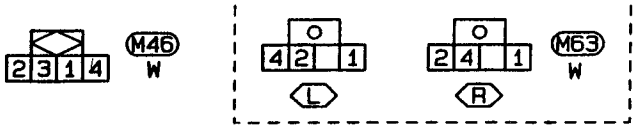

Refer to last page (Foldout page).

M15

HA

HHA013

Simpo PDF Merge and Split Unregistered Version - http://www.simpopdf.com

Wiring Diagram — A/C —

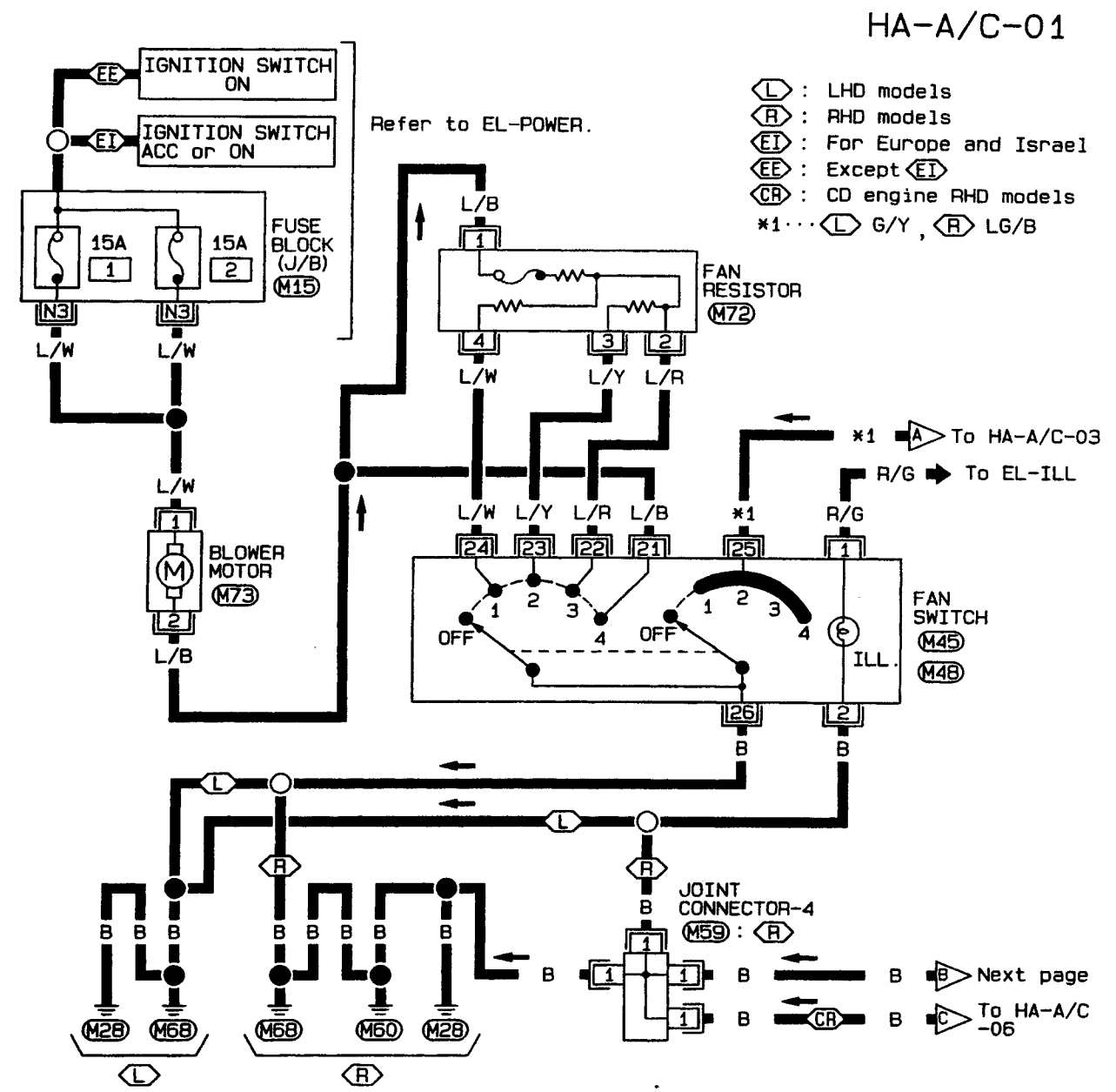

Refer to last page (Foldout page).

M15

HHA002

Simpo PDF Merge and Split Unregistered Version - http://www.simpopdf.com

Wiring Diagram — A/C — (Cont'd)

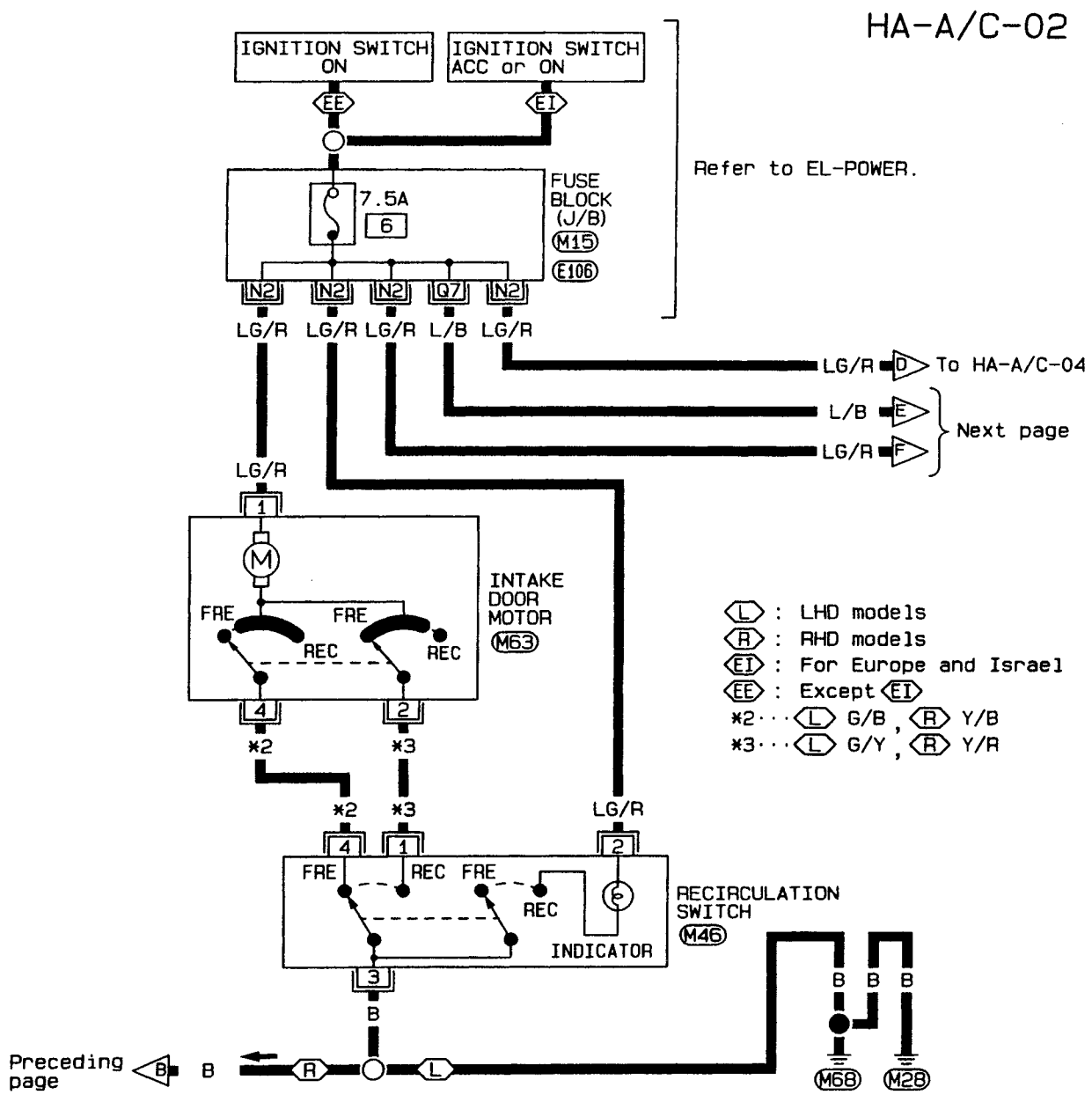

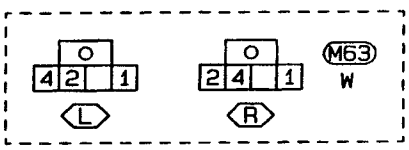

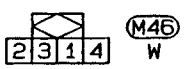

Refer to last page (Foldout page).

M15 , E106

HA

HHA003

Simpo PDF Merge and Split Unregistered Version - http://www.simpopdf.com

Wiring Diagram — A/C — (Cont'd)

HA-A/C-03

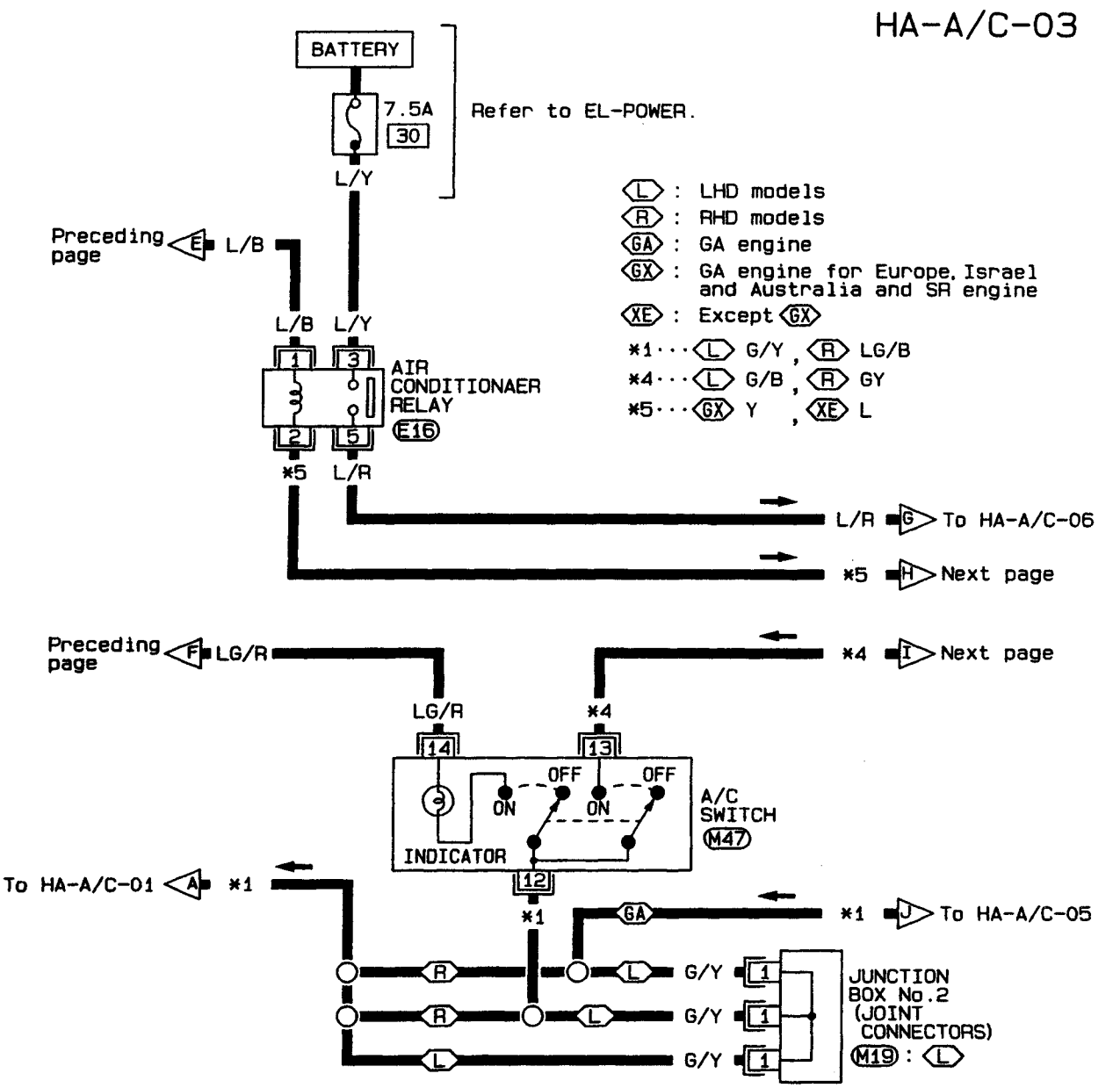

Refer to last page (Foldout page).

M19

HHA004

Simpo PDF Merge and Split Unregistered Version - http://www.simpopdf.com

Wiring Diagram — A/C — (Cont'd)

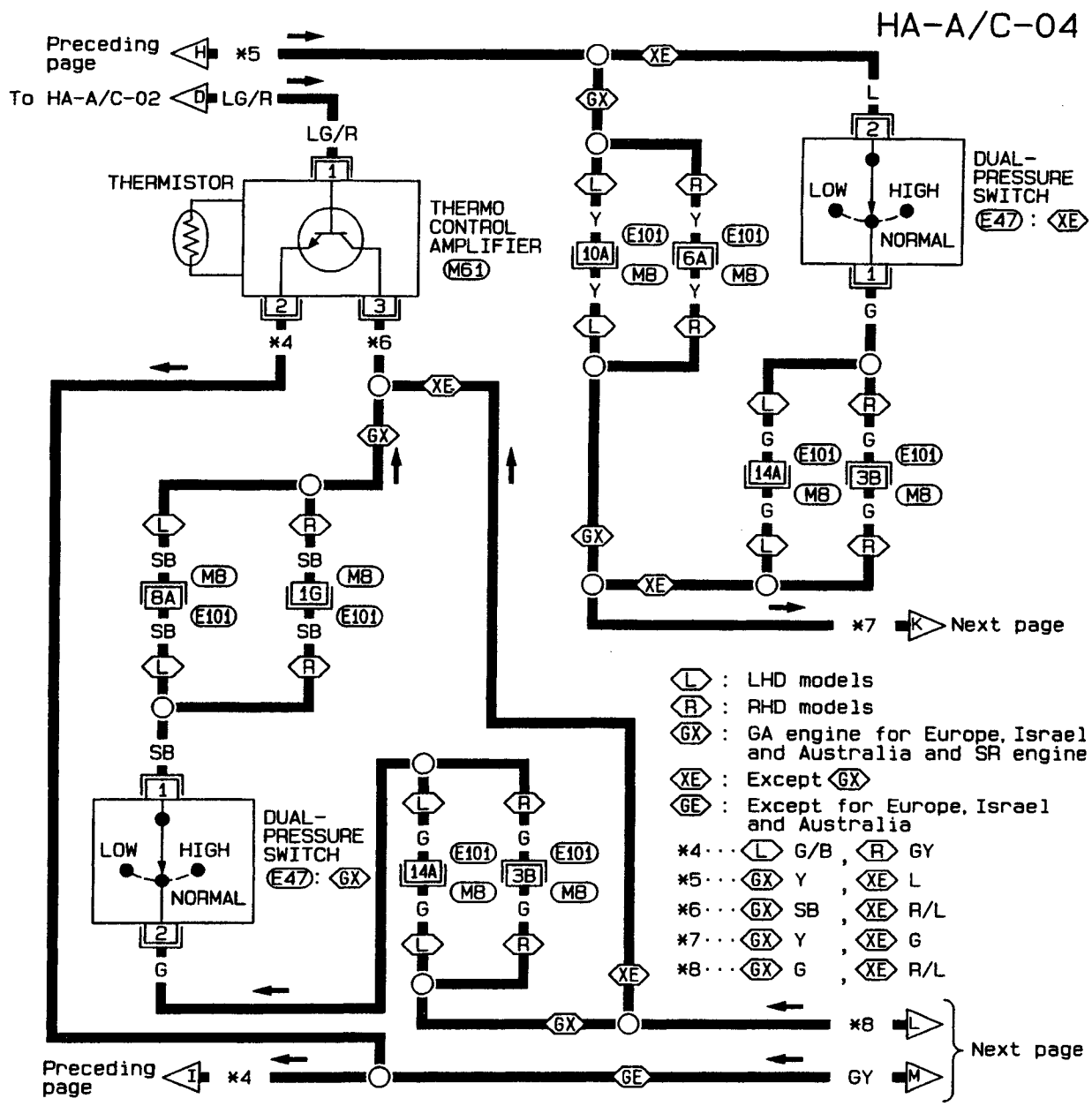

M61 W

E47 B

Refer to last page (Foldout page).

M8 , E101

HA

HHA005

Simpo PDF Merge and Split Unregistered Version - http://www.simpopdf.com

Wiring Diagram — A/C — (Cont'd)

HA-A/C-05

(L) : LHD models
(R) : RHD models
(GA) : GA engine
(CD) : CD engine
(EI) : For Europe and Israel
(EE) : Except (EI)
(AG) : GA engine for Australia
(EA) : Except (AG)
(GS) : GA engine and SR engine
(GE) : Except for Europe, Israel and Australia
(GX) : GA engine for Europe, Israel and Australia and SR engine
(XE) : Except (GX)
*1 ··· (L) G/Y , (R) LG/B
*7 ··· (GX) Y , (XE) G
*8 ··· (GX) G , (XE) R/L
*9 ··· (EA) 11 , (AG) 15
*10 ·· (EA) 41 , (AG) 21
*11 ·· (EA) 45 , (AG) 35
*12 ·· (EI) 4 , (EE) 5
*13 ·· (EI) 5 , (EE) 4

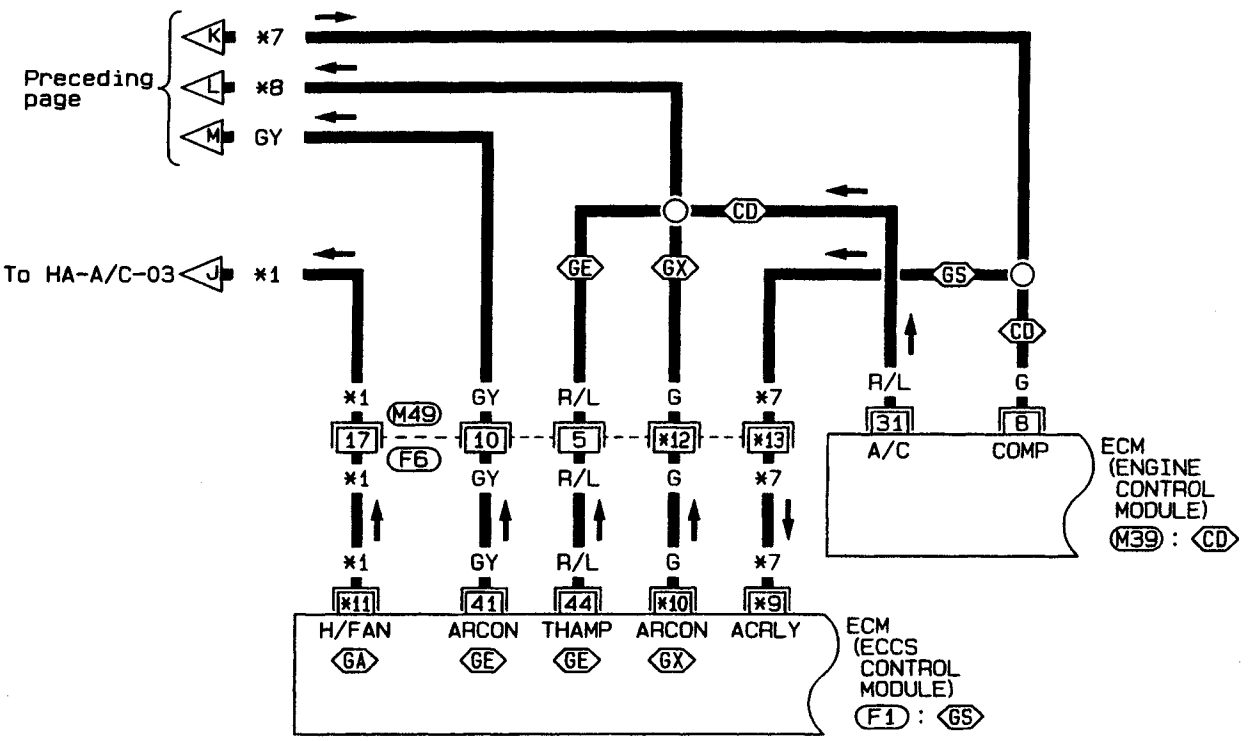

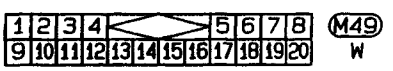

Refer to last page (Foldout page).
F1
M39

HHA006

Simpo PDF Merge and Split Unregistered Version - http://www.simpopdf.com

Wiring Diagram — A/C — (Cont'd)

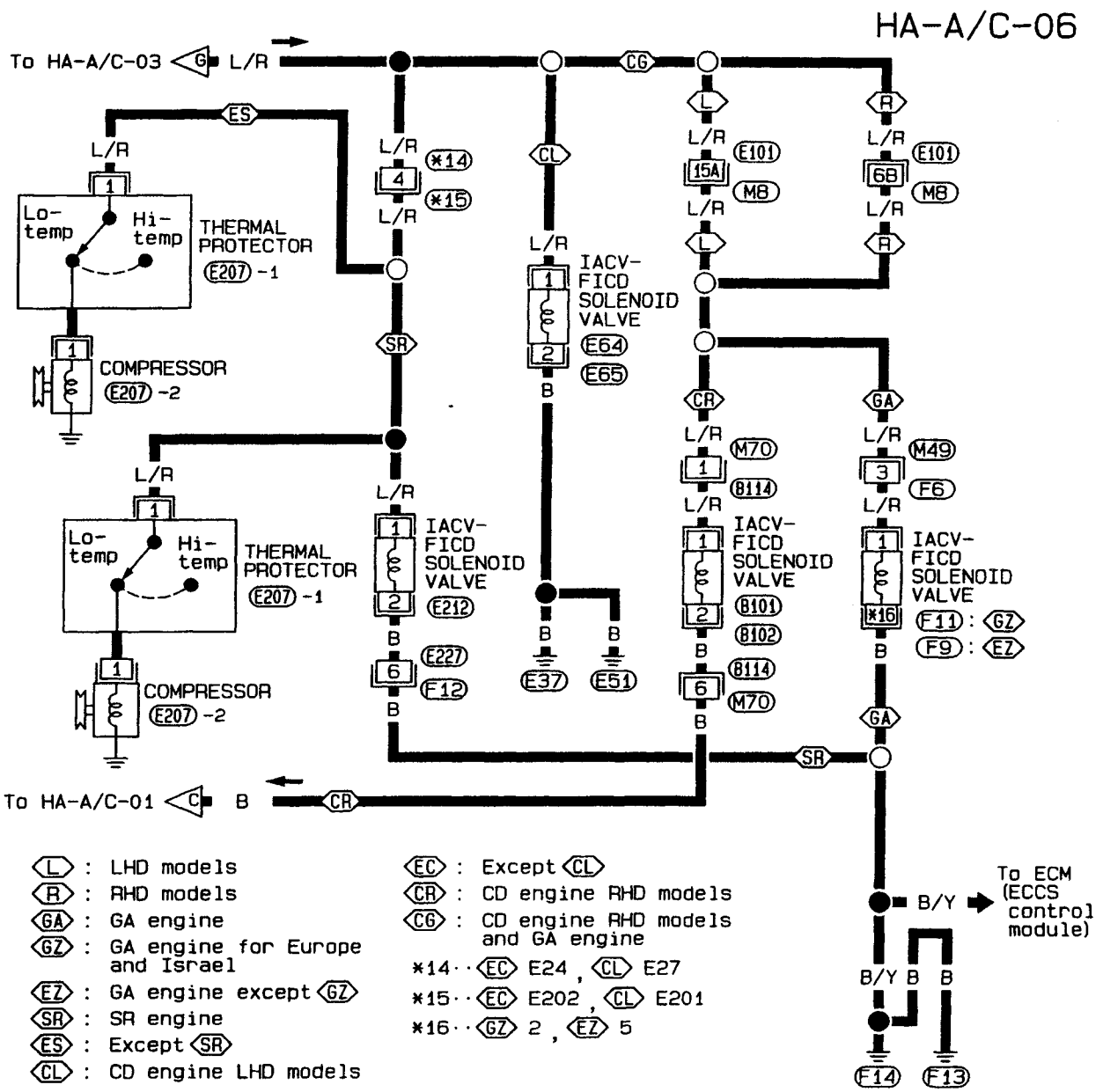

(L) : LHD models
(R) : RHD models
(GA) : GA engine
(GZ) : GA engine for Europe and Israel
(EZ) : GA engine except (GZ)
(SR) : SR engine
(ES) : Except (SR)
(CL) : CD engine LHD models
(EC) : Except (CL)
(CR) : CD engine RHD models
(CG) : CD engine RHD models and GA engine
*14 : (EC) E24, (CL) E27
*15 : (EC) E202, (CL) E201
*16 : (GZ) 2, (EZ) 5

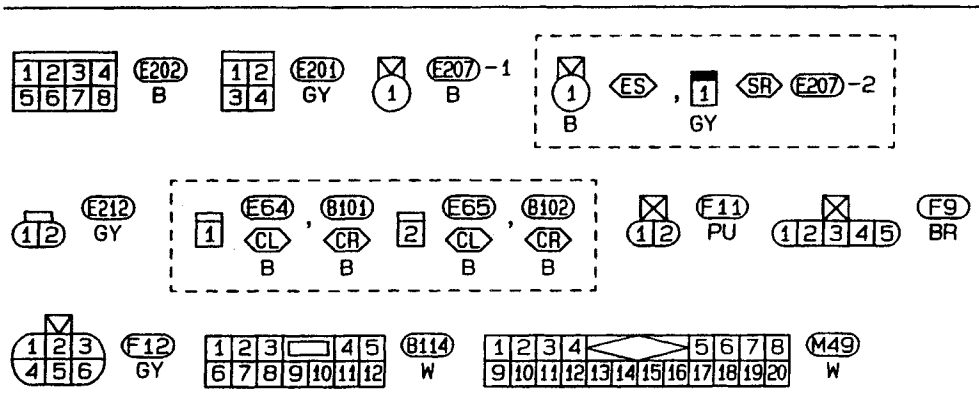

Refer to last page (Foldout page).
M8, E101

HA

HHA007

Simpo PDF Merge and Split Unregistered Version - http://www.simpopdf.com

Wiring Diagram — A/C — (Cont'd)

COOLING FAN CONTROL

SR20DE engine M/T models, GA engine M/T models, GA engine A/T models — except for Australia

HA-A/C-07

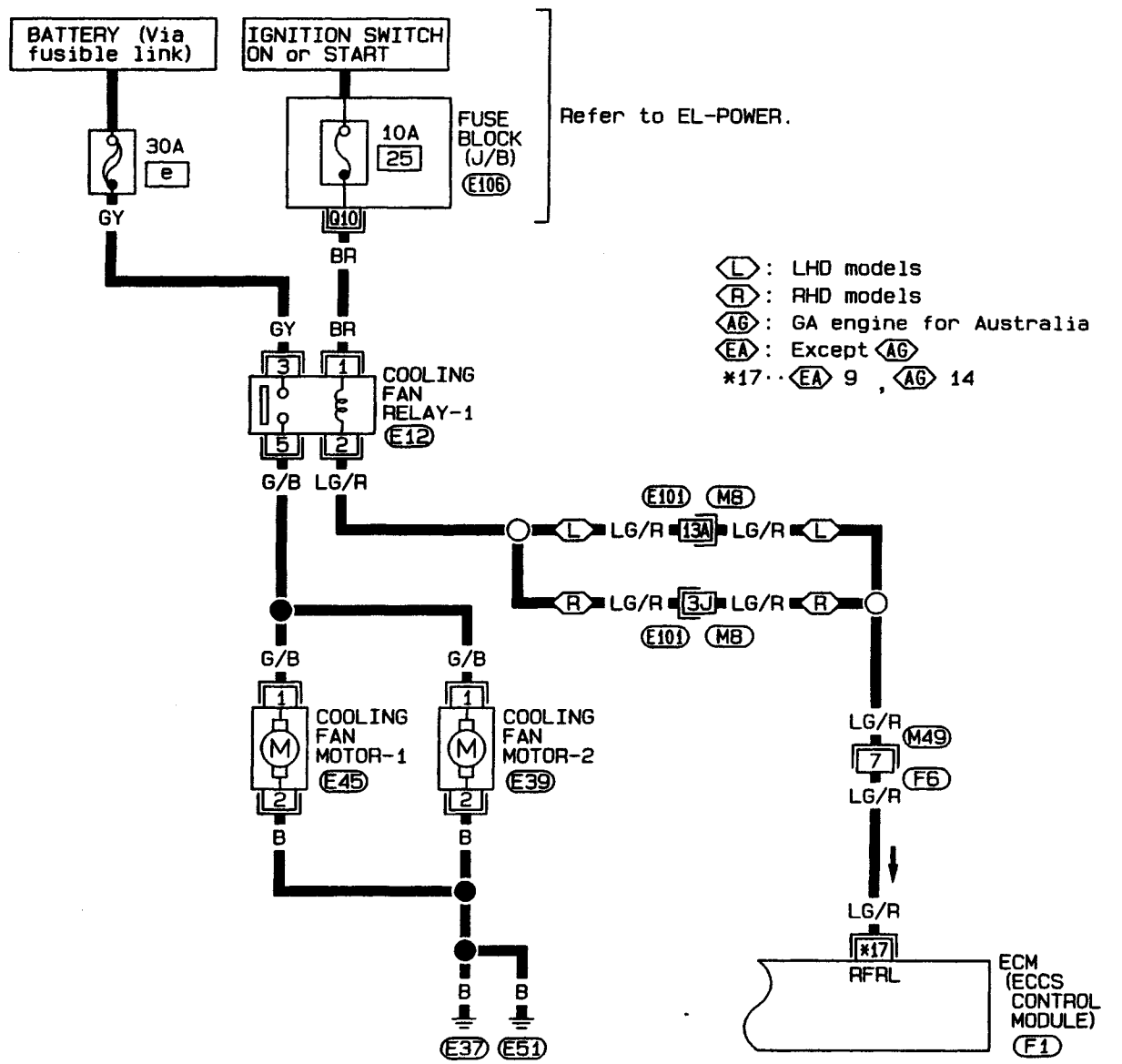

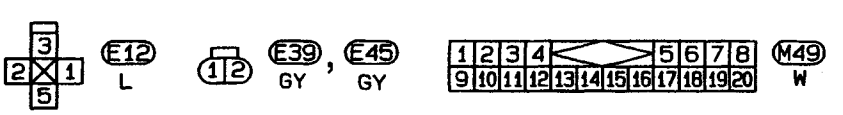

Refer to last page (Foldout page).

M8, E101

E106

F1

HHA008

Simpo PDF Merge and Split Unregistered Version - http://www.simpopdf.com

Wiring Diagram — A/C — (Cont'd)

GA engine A/T models — for Australia

HA-A/C-08

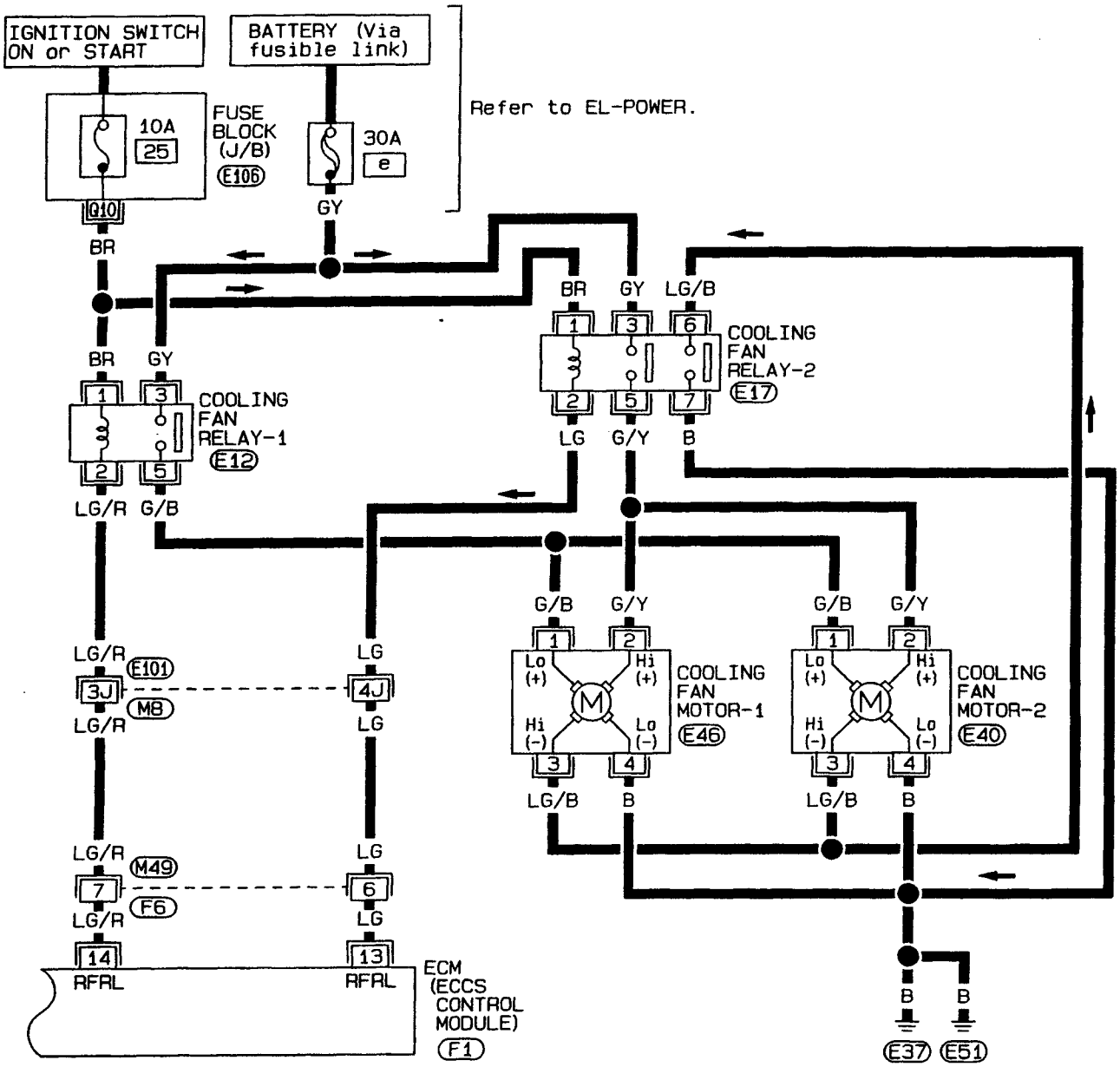

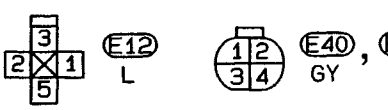

Refer to last page (Foldout page).

M8, E101

E106

F1

HA

Simpo PDF Merge and Split Unregistered Version - http://www.simpopdf.com

Wiring Diagram — A/C — (Cont'd)

GA engine A/T models — for Europe LHD without daytime light system (with dealer installed towing kit)

HA-A/C-09

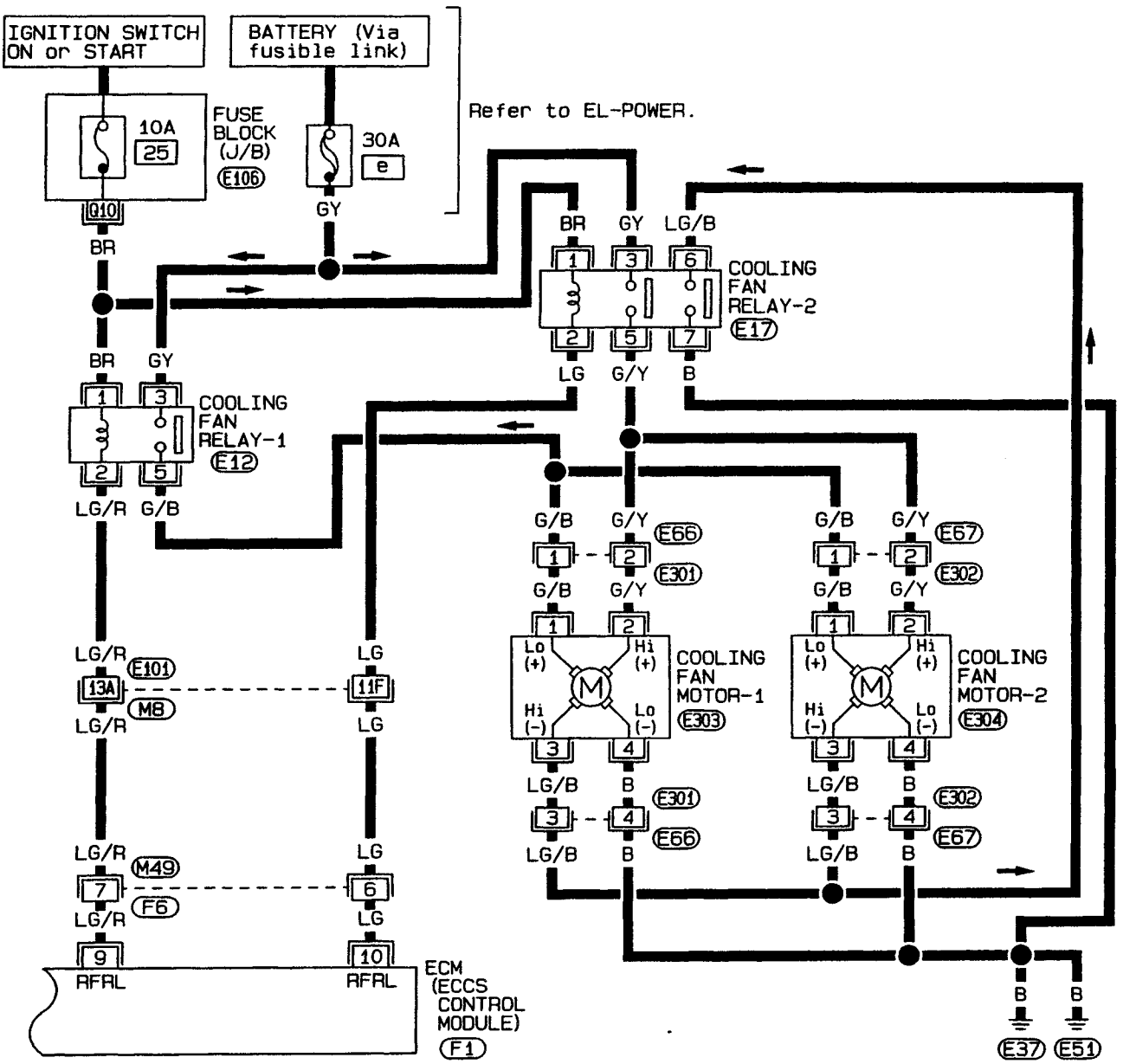

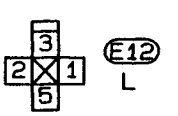



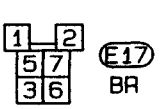

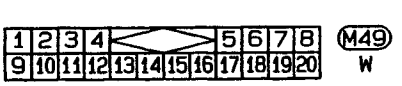

Refer to last page (Foldout page).

M8, E101

E106

F1

HHA047

Simpo PDF Merge and Split Unregistered Version - http://www.simpopdf.com

Wiring Diagram — A/C — (Cont'd)

SR20DE engine A/T models

HA-A/C-10

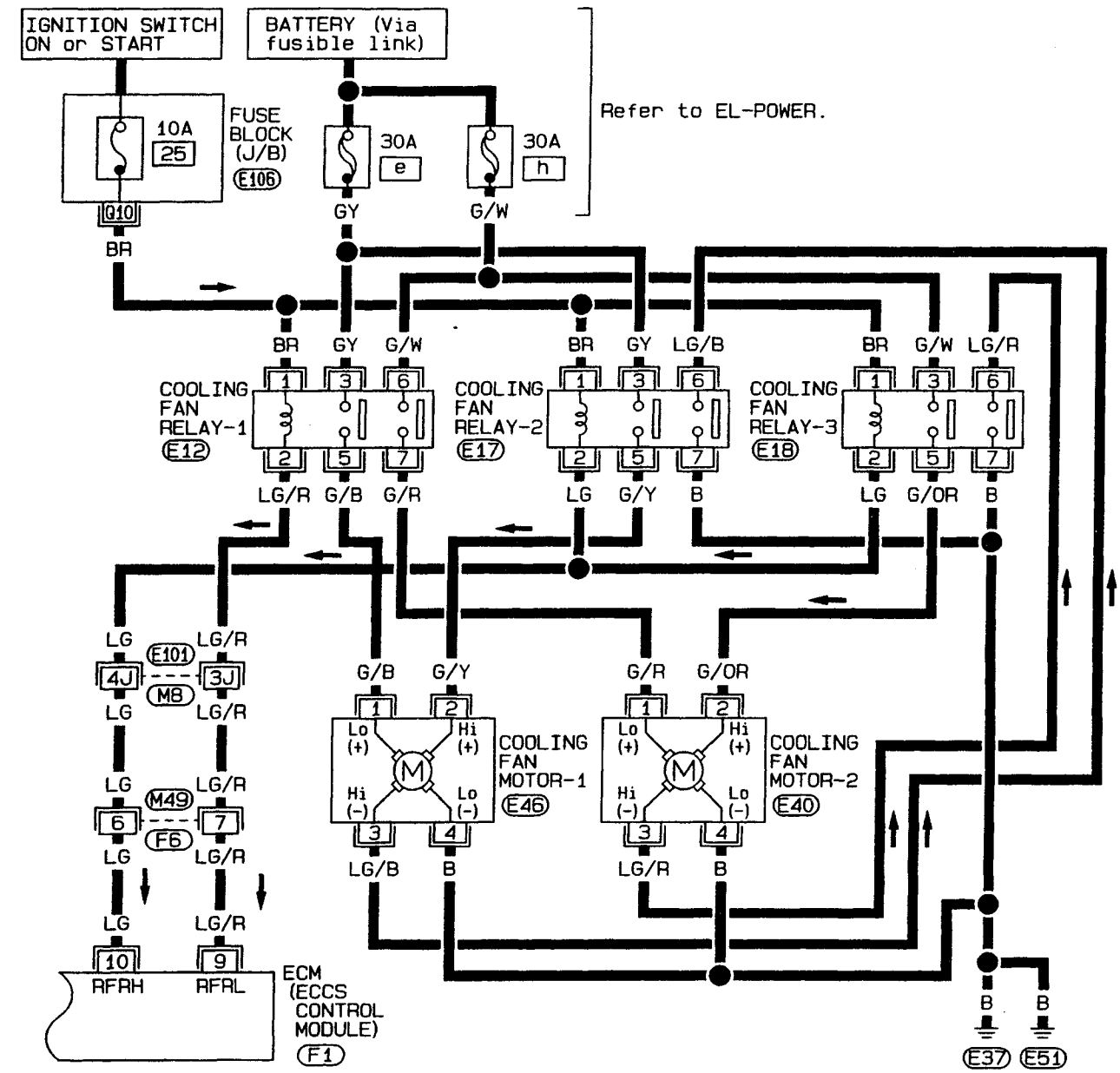


E12 BR, E17 BR, E18 BR


E40 GY, E46 GY

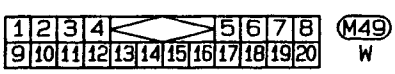
M49 W

Refer to last page (Foldout page).

M8, E101

E106

F1

HA

Simpo PDF Merge and Split Unregistered Version - http://www.simpopdf.com

Wiring Diagram — A/C — (Cont'd)

CD20 engine models

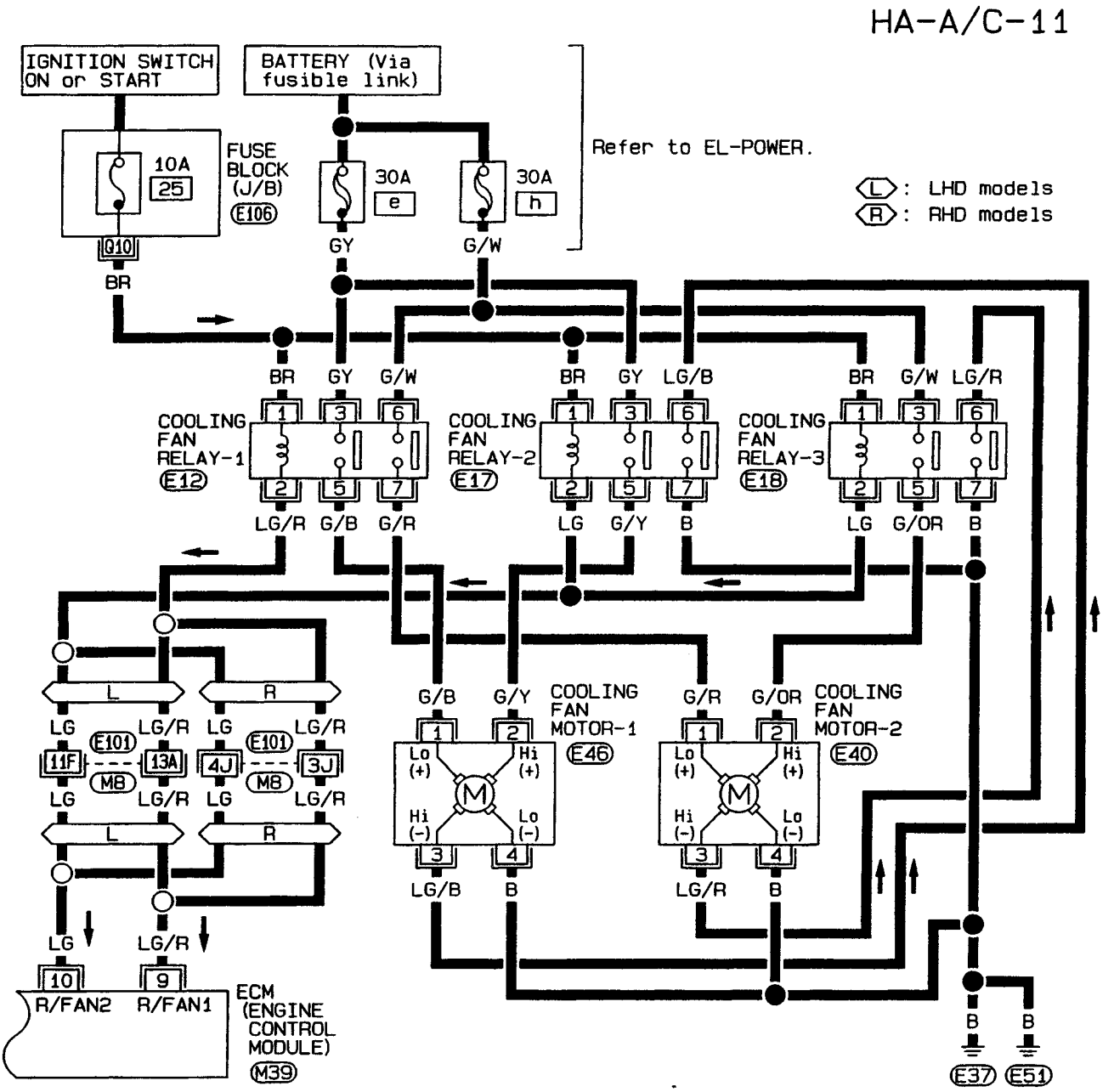

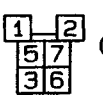

E12 BR, E17 BR, E18 BR



E40 GY, E46 GY

Refer to last page (Foldout page).

M8, E101

E106

M39

HHA011

Simpo PDF Merge and Split Unregistered Version - http://www.simpopdf.com

Main Power Supply and Ground Circuit Check

POWER SUPPLY CIRCUIT CHECK FOR A/C SYSTEM

Check power supply circuit for air conditioning system.
Refer to "POWER SUPPLY ROUTING" in EL section and Wiring Diagram.

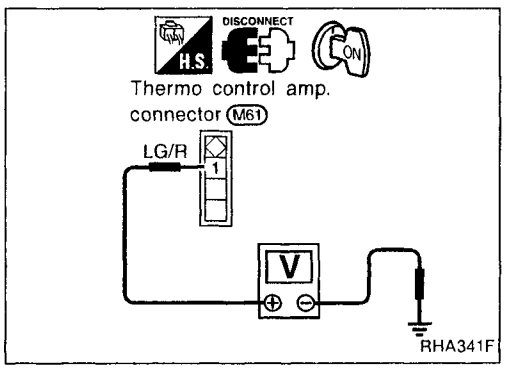

THERMO CONTROL AMP. CHECK

Check power supply circuit for thermo control amp. with ignition switch ON.

1: Disconnect thermo control amp. harness connector.
2. Connect voltmeter from harness side.
3. Measure voltage across terminal No. ① and body ground.

Voltmeter terminal		Voltage
⊕	⊖	
①	Body ground	Approx. 12V

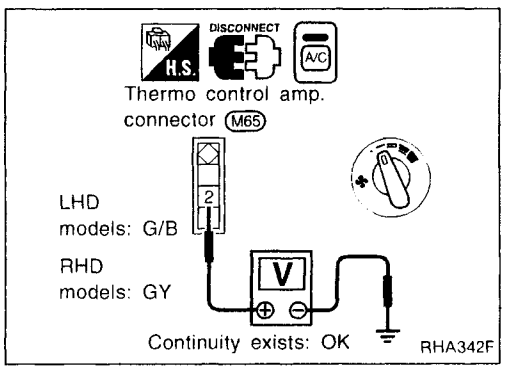

Turn A/C and fan switches ON. Check body ground circuit for thermo control amp.

1. Disconnect thermo control amp. harness connector.
2. Connect ohmmeter from harness side.
3. Check for continuity between terminal No. ② and body ground.

Ohmmeter terminal		Continuity
⊕	⊖	
②	Body ground	Yes

HA

Simpo PDF Merge and Split Unregistered Version - http://www.simpopdf.com

	INCIDENT	Flow chart No.
1	Fan fails to rotate.	1
2	Fan does not rotate at 1-speed.	2
3	Fan does not rotate at 2-speed.	3
4	Fan does not rotate at 3-speed.	4
5	Fan does not rotate at 4-speed.	5

A

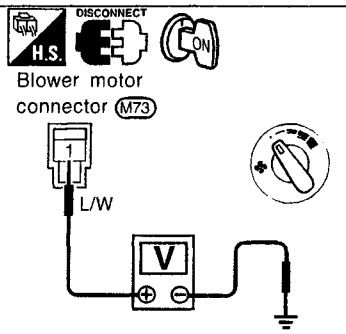

B

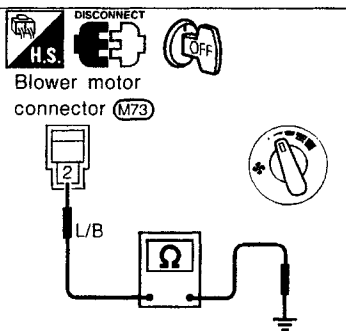

C

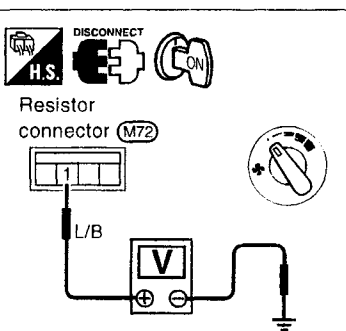

D

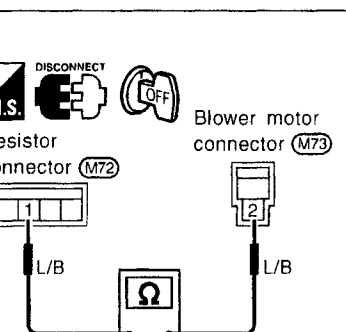

Diagnostic Procedure 1

SYMPTOM: Blower motor does not rotate.

- **Perform PRELIMINARY CHECK 1 before referring to the following flow chart.**

Check if blower motor rotates properly at each fan speed.
Conduct checks as per flow chart at left.

5 → Ⓔ
4 → Ⓓ
3 → Ⓒ
2 → Ⓑ

(Go to next page.)

1

A

CHECK POWER SUPPLY FOR BLOWER MOTOR.
Disconnect blower motor harness connector.
Do approx. 12 volts exist between blower motor harness terminal No. ① and body ground?

No → Check 15A (No. 1 and No. 2) fuses at fuse block.
(Refer to "POWER SUPPLY ROUTING" in EL section and Wiring Diagram.)

Yes

B

Check circuit continuity between blower motor harness terminal No. ② and body ground.

NG → Reconnect blower motor harness connector.

OK

CHECK BLOWER MOTOR.
(Refer to Electrical Components Inspection.) (HA-62)

NG

Replace blower motor.

C

CHECK BLOWER MOTOR CIRCUIT BETWEEN BLOWER MOTOR AND RESISTOR.
Do approx. 12 volts exist between resistor harness terminal No. ① and body ground?

No → Disconnect blower motor and resistor harness connectors.

Yes

Disconnect fan switch harness connector.

D

Note: Check circuit continuity between blower motor harness terminal No. ② and resistor harness terminal No. ①.
Continuity should exist.
If OK, check harness for short.

Ⓐ

(Go to next page.)

Note:
If the result is NG after checking circuit continuity, repair harness or connector.

Simpo PDF Merge and Split Unregistered Version - http://www.simpopdf.com

Diagnostic Procedure 1 (Cont'd)

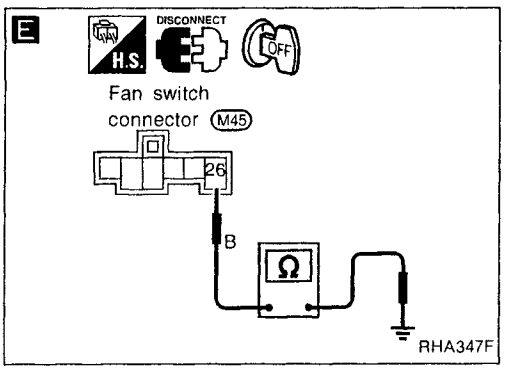

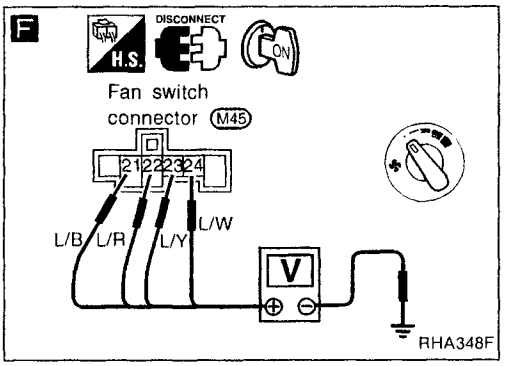

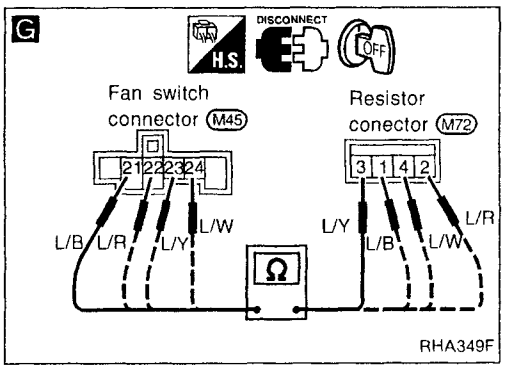

Ⓐ

E

Check circuit continuity between fan switch harness terminal No. ㉖ and body ground.

Note

OK

CHECK RESISTOR AFTER DISCONNECTING IT.
(Refer to Electrical Components Inspection.) (HA-63)

2 → Ⓑ
3 → Ⓒ
4 → Ⓓ

OK

NG → Replace resistor.

Ⓔ

Reconnect resistor harness connector.

1 2 3 4 5

F

CHECK FAN SWITCH CIRCUIT.
Do approx. 12 volts exist between each fan switch harness terminal and body ground?

Flow chart No.	Terminal No. ⊕	Terminal No. ⊖	Voltage
2	㉔	Body ground	Approx. 12V
3	㉓		
4	㉒		
5	㉑		

Yes

No

G

Note

Check circuit continuity between fan switch harness terminal and resistor harness terminal.

Terminal No. Fan switch	Terminal No. Resistor	Continuity
㉑	①	Yes
㉒	②	
㉓	③	
㉔	④	

If OK, check harness for short.

CHECK FAN SWITCH AFTER DISCONNECTING IT.
(Refer to Electrical Components Inspection.) (HA-62)

NG → Replace fan switch.

Note:
If the result is NG after checking circuit continuity, repair harness or connector.

HA

Simpo PDF Merge and Split Unregistered Version - http://www.simpopdf.com

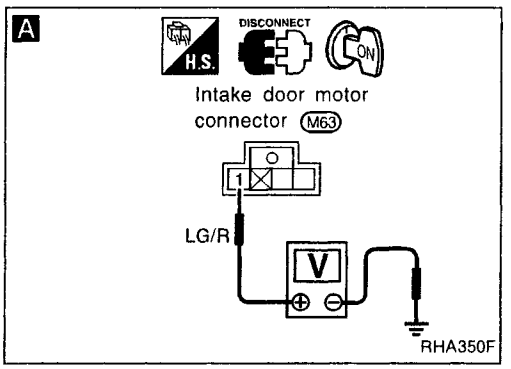

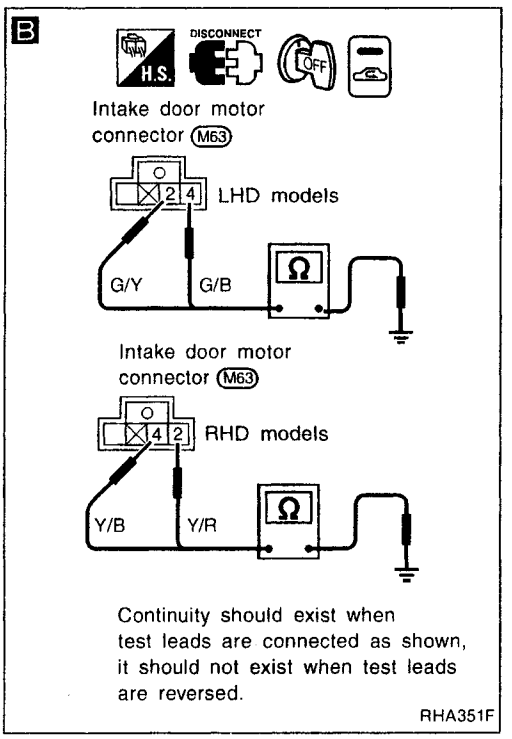

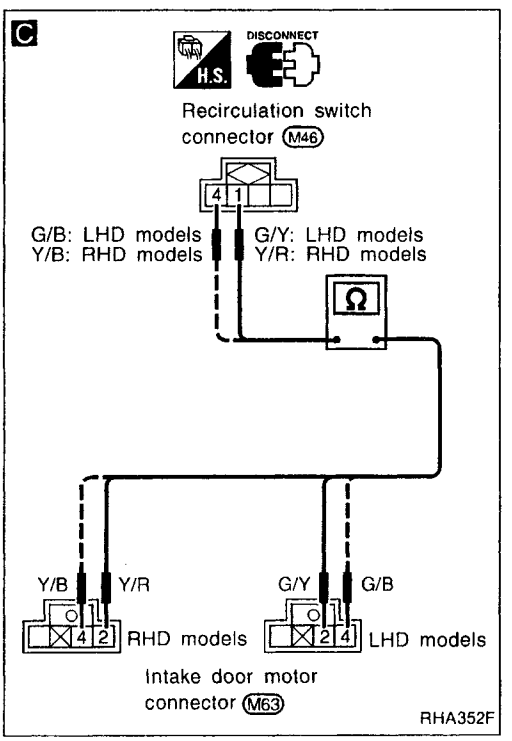

Diagnostic Procedure 2

SYMPTOM: Intake door does not change.

A

CHECK POWER SUPPLY FOR INTAKE DOOR MOTOR.
Disconnect intake door motor harness connector.
Do approx. 12 volts exist between intake door motor harness terminal No. ① and body ground?

No → Check 7.5A (No. 6) fuse at fuse block. (Refer to "POWER SUPPLY ROUTING" in EL section and Wiring Diagram.)

Yes ↓

B

CHECK BODY GROUND CIRCUIT FOR INTAKE DOOR MOTOR.
Turn recirculation switch ON. Does continuity exist between intake door motor harness terminal ② and body ground?
Turn recirculation switch OFF. Does continuity exist between intake door motor harness terminal ④ and body ground?

No → Disconnect recirculation switch harness connector.

C

Note

Check continuity between recirculation switch harness terminal ① (④) and intake door motor harness terminal ② (④).
Continuity should exist.
If OK, check harness for short.

OK ↓

Ⓐ
(Go to next page.)

Yes ↓

CHECK INTAKE DOOR LINKAGE.
Refer to Control Linkage Adjustment. (HA-65)

OK ↓

Replace intake door motor.

Note:
If the result is NG after checking circuit continuity, repair harness or connector.

Simpo PDF Merge and Split Unregistered Version - http://www.simpopdf.com

Diagnostic Procedure 2 (Cont'd)

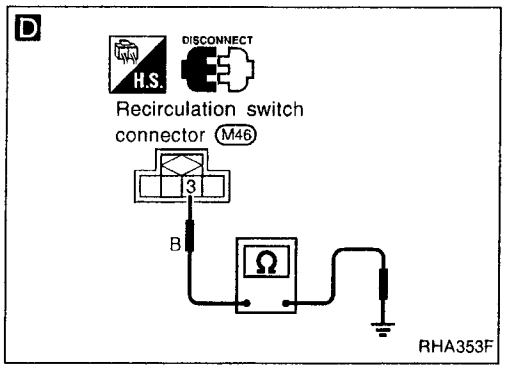

Ⓐ

D

Note

Check circuit continuity between recirculation switch harness terminal No. ③ and body ground.
Continuity should exist.
If OK, check harness for short.

OK

CHECK RECIRCULATION SWITCH.
(Refer to Electrical Components Inspection.) (HA-63)

NG → Replace recirculation switch.

Note:
If the result is NG after checking circuit continuity, repair harness or connector.

HA

Simpo PDF Merge and Split Unregistered Version - http://www.simpopdf.com

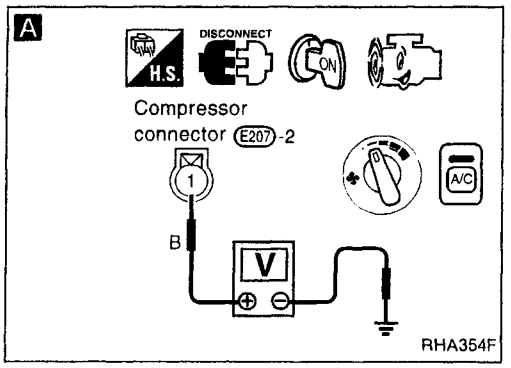

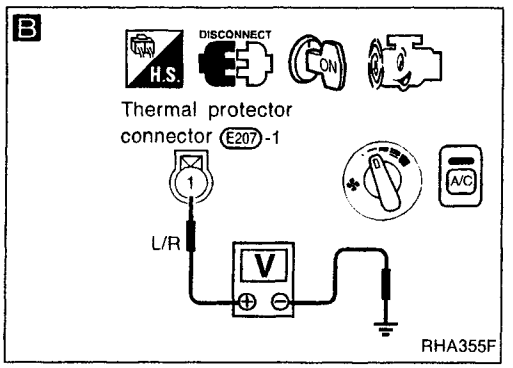

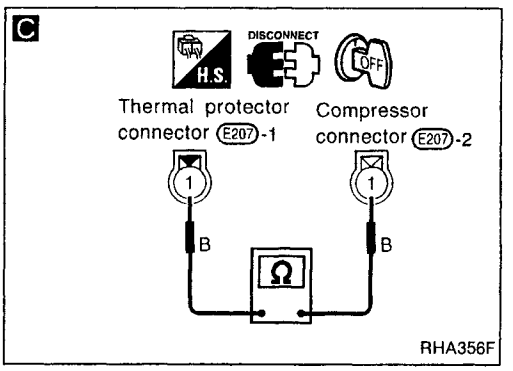

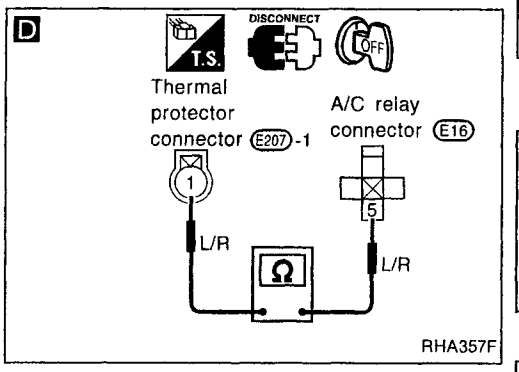

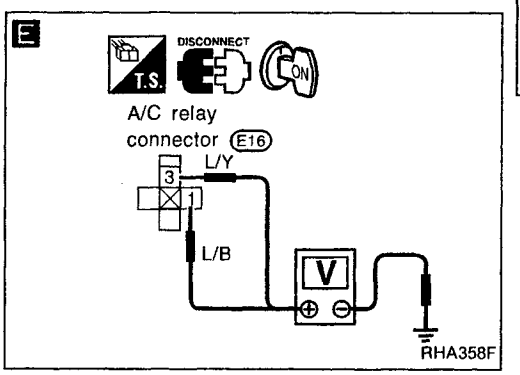

Diagnostic Procedure 3

SYMPTOM: Magnet clutch does not engage when A/C switch and fan switch are ON. — For GA and SR engines

- **Perform PRELIMINARY CHECK 1 before referring to the following flow chart.**

A

CHECK POWER SUPPLY FOR COMPRESSOR.
Disconnect compressor harness connector.
Do approx. 12 volts exist between compressor harness terminal ① and body ground?

Yes → Check magnet clutch coil.
NG → Replace magnet clutch. Refer to HA-77, HA-80.

No ↓

B

CHECK POWER SUPPLY FOR THERMAL PROTECTOR.
Disconnect thermal protector harness connector.
Do approx. 12V exist between thermal protector harness terminal ① and body ground?

Yes → **C**
CHECK THERMAL PROTECTOR.
Check circuit continuity between thermal protector harness terminal ① and compressor harness terminal ①.
Continuity should exist.
If OK, check harness for short.
NG → Replace thermal protector.

No ↓

Disconnect A/C relay. ↓

D Note

CHECK CIRCUIT CONTINUITY BETWEEN A/C RELAY HARNESS TERMINAL ⑤ AND THERMAL PROTECTOR HARNESS TERMINAL ①.
Continuity should exist.
If OK, check harness for short.

OK ↓

E

CHECK POWER SUPPLY FOR A/C RELAY.
Disconnect A/C relay.
Do approx. 12 volts exist between A/C relay harness terminals ①, ③ and body ground?

No → CHECK POWER SUPPLY CIRCUIT AND 7.5A (No. 6 and 30) FUSES AT FUSE BLOCK.
Refer to EL section ("Wiring Diagram", "POWER SUPPLY ROUTING").

Yes ↓

CHECK A/C RELAY AFTER DISCONNECTING IT.
Refer to HA-64.

NG → Replace A/C relay.

OK ↓

Ⓐ: GA engine (for Europe, Israel and Australia) and SR engine
Ⓒ: Except above

Note:
If the result is NG after checking circuit continuity, repair harness or connector.

Simpo PDF Merge and Split Unregistered Version - http://www.simpopdf.com

Diagnostic Procedure 3 (Cont'd)

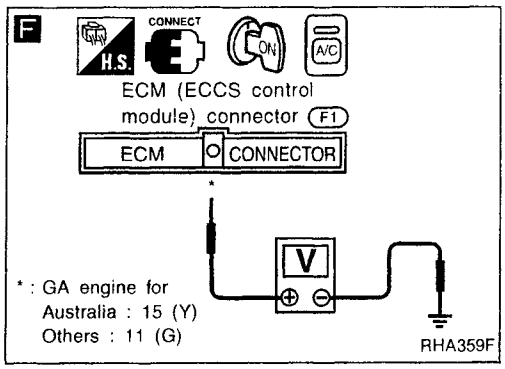

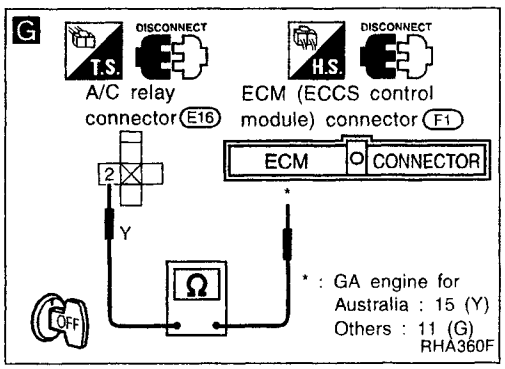

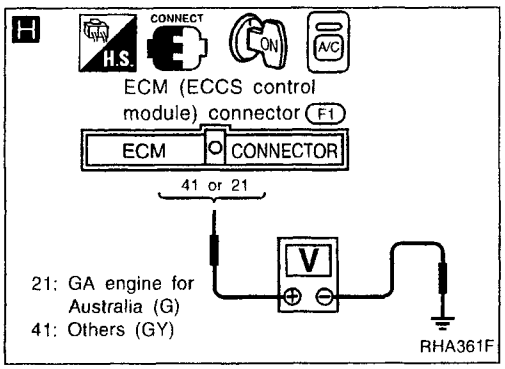

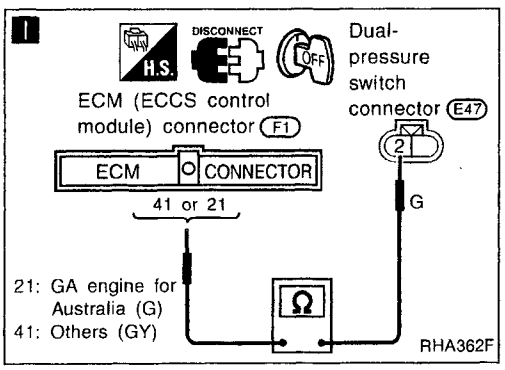

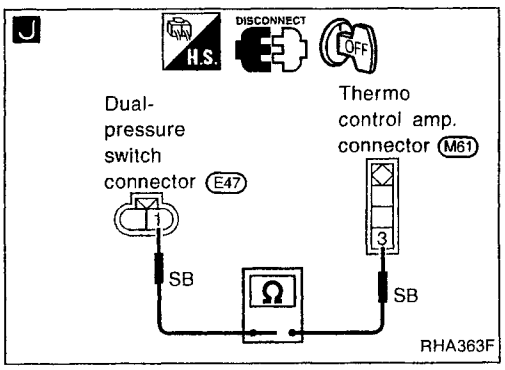

Ⓐ

Reconnect A/C relay.

F

CHECK COIL SIDE CIRCUIT OF A/C RELAY.
Do approx. 12 volts exist between ECM (ECCS control module) harness terminal ⑪ or ⑮ and body ground?

No → Disconnect A/C relay. Disconnect ECM (ECCS control module) harness connector.

G Note

CHECK CIRCUIT CONTINUITY BETWEEN A/C RELAY HARNESS TERMINAL ② AND ECM (ECCS CONTROL MODULE) HARNESS TERMINAL ⑪ or ⑮.
Continuity should exist.
If OK, check harness for short.

Yes

H

CHECK VOLTAGE FOR ECM (ECCS control module).
Do approx. 12 volts exist between ECM (ECCS control module) harness terminal ㊶, or ㉑ and body ground?

No → CHECK ECM (ECCS control module). Refer to EC section.

Yes

Disconnect ECM (ECCS control module) harness connector.
Disconnect dual-pressure switch harness connector.

I Note

CHECK CIRCUIT CONTINUITY BETWEEN ECM (ECCS CONTROL MODULE) HARNESS TERMINAL ㊶ or ㉑ AND DUAL-PRESSURE SWITCH HARNESS TERMINAL ②.
Continuity should exist.
If OK, check harness for short.

OK

CHECK DUAL-PRESSURE SWITCH.
Refer to HA-64.

NG → Replace dual-pressure switch.

OK

Disconnect thermo control amp. harness connector.

J Note

CHECK CIRCUIT CONTINUITY BETWEEN DUAL-PRESSURE SWITCH HARNESS TERMINAL ② AND THERMO CONTROL AMP. HARNESS TERMINAL ③.
Continuity should exist.
If OK, check harness for short.

OK

Reconnect dual-pressure switch harness connector.

Ⓓ (Go to O .)

Note:
If the result is NG after checking circuit continuity, repair harness or connector.

HA

Simpo PDF Merge and Split Unregistered Version - http://www.simpopdf.com

Diagnostic Procedure 3 (Cont'd)

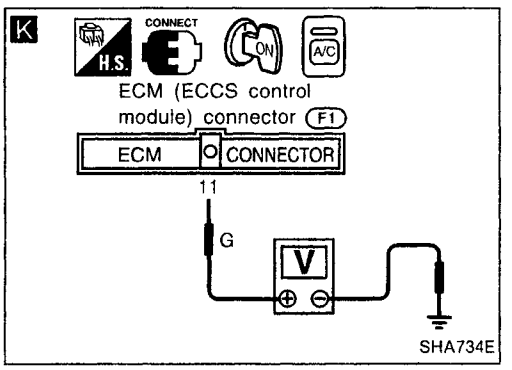

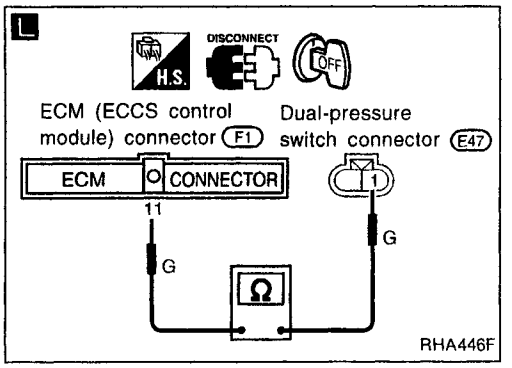

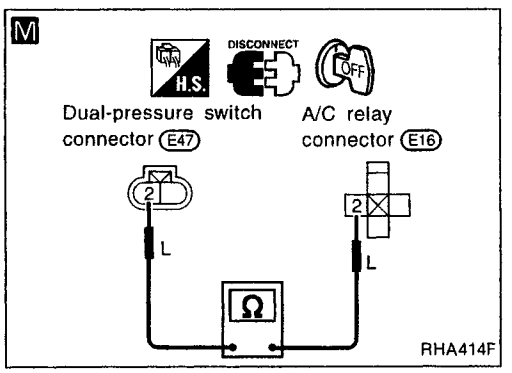

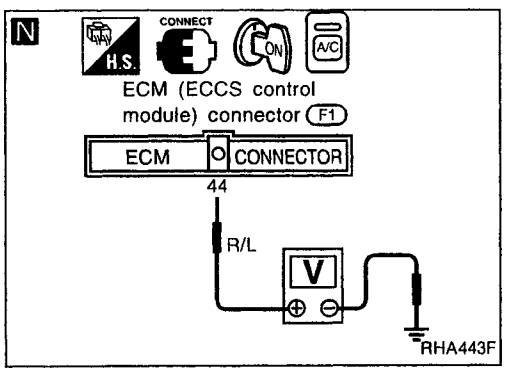

Ⓒ

Reconnect A/C relay.

K

CHECK COIL SIDE CIRCUIT OF A/C RELAY.
Do approx. 12 volts exist between ECM (ECCS control module) harness terminal ⑪ and body ground?

No → Disconnect ECM (ECCS control module) harness connector.
Disconnect dual-pressure switch harness connector.

Yes

L Note

CHECK CIRCUIT CONTINUITY BETWEEN ECM (ECCS CONTROL MODULE) HARNESS TERMINAL ⑪ AND DUAL-PRESSURE SWITCH HARNESS TERMINAL ①.
Continuity should exist.
If OK, check harness for short.

OK

CHECK DUAL-PRESSURE SWITCH. Refer to HA-64.

NG → Replace dual-pressure switch.

M Note

CHECK CIRCUIT CONTINUITY BETWEEN A/C RELAY HARNESS TERMINAL ② AND DUAL-PRESSURE SWITCH HARNESS TERMINAL ②.
Continuity should exist.
If OK, check harness for short.

N

CHECK VOLTAGE FOR ECM (ECCS control module).
Do approx. 12 volts exist between ECM (ECCS control module) harness terminal No. ㊹ and body ground?

No → CHECK ECM (ECCS control module). (Refer to EC section.)

Yes

Disconnect ECM (ECCS control module) harness connector.
Disconnect thermo control amp. harness connector.

Yes

Ⓓ

Note:
If the result is NG after checking circuit continuity, repair harness or connector.

Simpo PDF Merge and Split Unregistered Version - http://www.simpopdf.com

Diagnostic Procedure 3 (Cont'd)

O

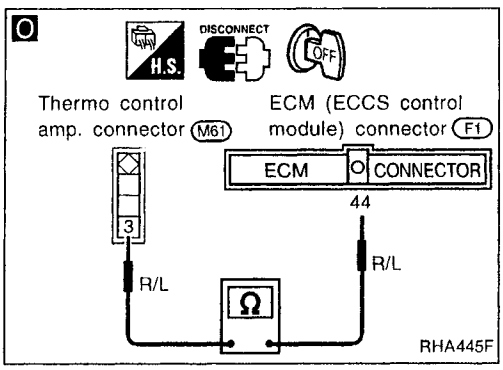

P

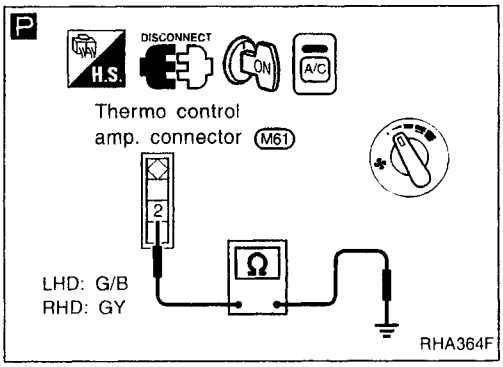

Q

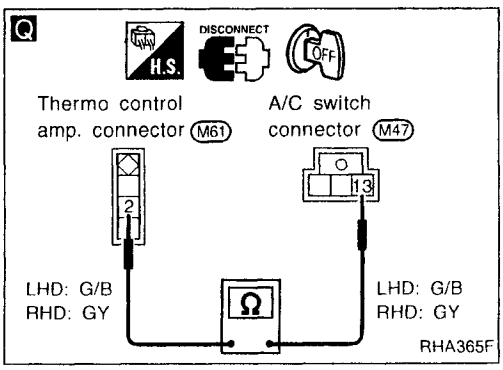

R

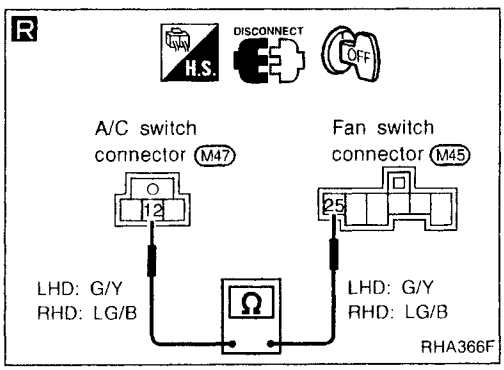

Ⓓ

O Note

CHECK CIRCUIT CONTINUITY BETWEEN ECM (ECCS CONTROL MODULE) HARNESS TERMINAL ㊹ AND THERMO CONTROL AMP. HARNESS TERMINAL ③.
Continuity should exist.
If OK, check harness for short.

OK ↓

Reconnect thermo control amp. harness connector.

Ⓑ Note

CHECK POWER SUPPLY FOR THERMO CONTROL AMP.
Refer to HA-49.

P

CHECK BODY GROUND CIRCUIT FOR THERMO CONTROL AMP.
Disconnect thermo control amp. harness connector.
Does continuity exist between thermo control amp. harness terminal ② and body ground?

Yes → Replace thermo control amp.

No ↓

Disconnect A/C switch harness connector.

Q Note

CHECK CIRCUIT CONTINUITY BETWEEN THERMO CONTROL AMP. HARNESS TERMINAL ② AND A/C SWITCH HARNESS TERMINAL ⑬.
Continuity should exist.
If OK, check harness for short.

OK ↓

CHECK A/C SWITCH.
Refer to HA-63.

NG → Replace A/C switch.

OK ↓

Disconnect fan switch harness connector.

R Note

CHECK CIRCUIT CONTINUITY BETWEEN A/C SWITCH HARNESS TERMINAL ⑫ AND FAN SWITCH HARNESS TERMINAL ㉕.

OK ↓

Ⓔ

Note:
If the result is NG or No after checking circuit continuity, repair harness or connector.

HA

Simpo PDF Merge and Split Unregistered Version - http://www.simpopdf.com

Diagnostic Procedure 3 (Cont'd)

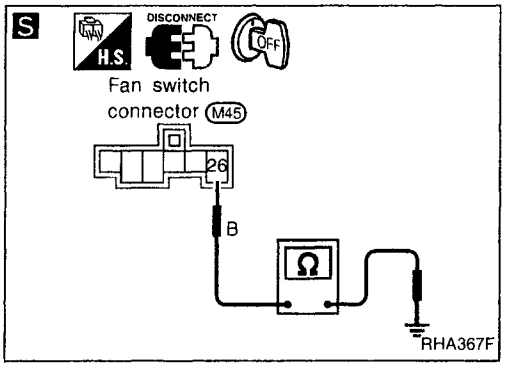

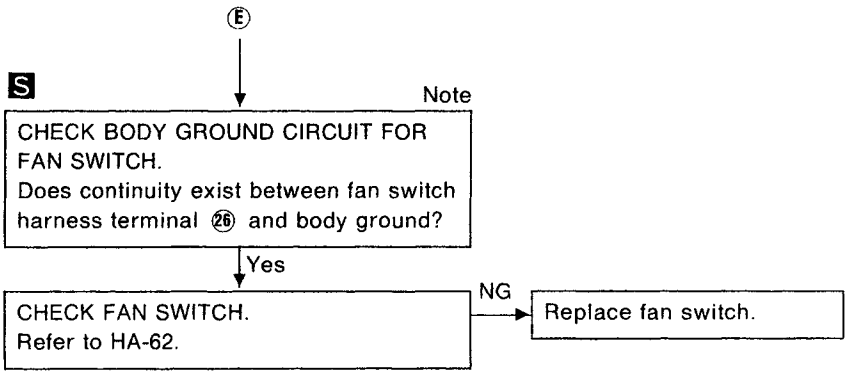

Note:
If the result is No after checking circuit continuity, repair harness or connector.

Simpo PDF Merge and Split Unregistered Version - http://www.simpopdf.com

Diagnostic Procedure 3 (Cont'd)

SYMPTOM: Magnet clutch does not engage when A/C switch and fan switch are ON. — For CD engine

- **Perform PRELIMINARY CHECK 1 before referring to the following flow chart.**

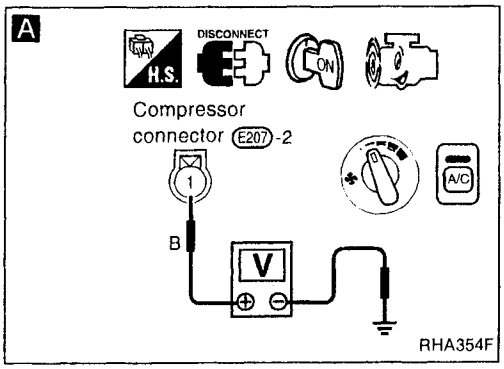

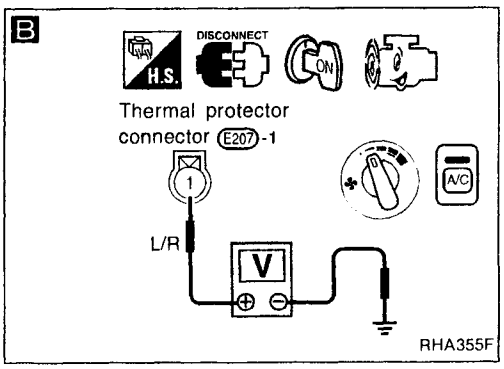

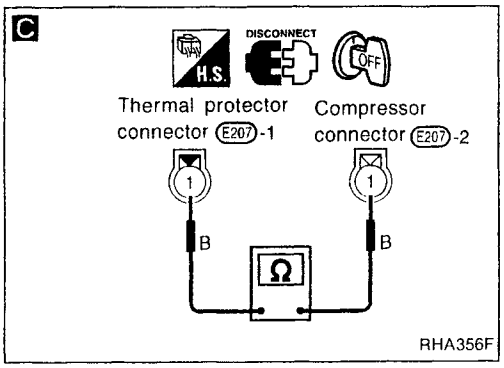

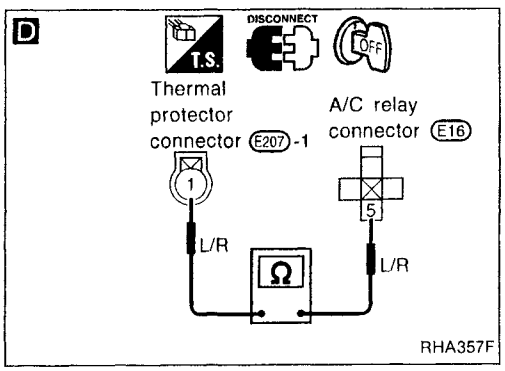

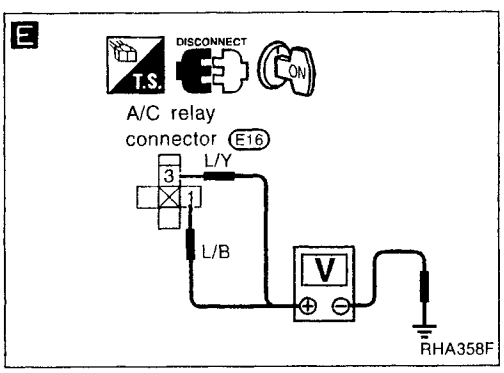

A

CHECK POWER SUPPLY FOR COMPRESSOR.
Disconnect compressor harness connector.
Do approx. 12 volts exist between compressor harness terminal ① and body ground?

Yes → Check magnet clutch coil.
OK → Replace magnet clutch. Refer to HA-77.

No ↓

B

CHECK POWER SUPPLY FOR THERMAL PROTECTOR.
Disconnect thermal protector harness connector.
Do approx. 12V exist between thermal protector harness terminal ① and body ground?

Yes → C

C

CHECK THERMAL PROTECTOR.
Check circuit continuity between thermal protector harness terminal ① and compressor harness terminal ①.
Continuity should exist.
If OK, check harness for short.

NG → Replace thermal protector.

No ↓

Disconnect A/C relay. ↓

D — Note

CHECK CIRCUIT CONTINUITY BETWEEN A/C RELAY HARNESS TERMINAL ⑤ AND THERMAL PROTECTOR HARNESS TERMINAL ①.
Continuity should exist.
If OK, check harness for short.

OK ↓

E

CHECK POWER SUPPLY FOR A/C RELAY.
Disconnect A/C relay.
Do approx. 12 volts exist between A/C relay harness terminals ①, ③ and body ground?

No → CHECK POWER SUPPLY CIRCUIT AND 7.5A (No. 6 and 30) FUSES AT FUSE BLOCK. Refer to EL section ("Wiring Diagram", "POWER SUPPLY ROUTING").

Yes ↓

CHECK A/C RELAY AFTER DISCONNECTING IT.
Refer to HA-64.

NG → Replace A/C relay.

OK ↓

Ⓐ

(Go to next page.)

Note:
If the result is NG or No after checking circuit continuity, repair harness or connector.

HA

Simpo PDF Merge and Split Unregistered Version - http://www.simpopdf.com

Diagnostic Procedure 3 (Cont'd)

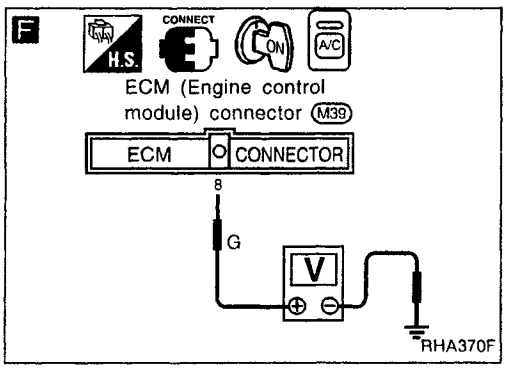

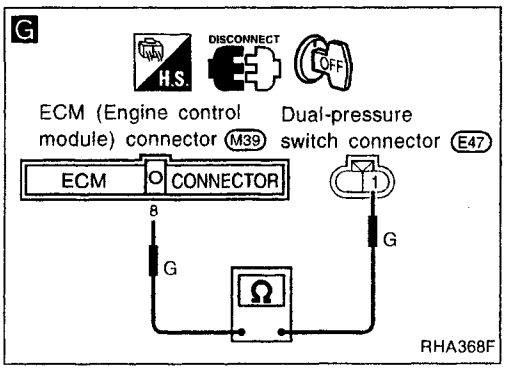

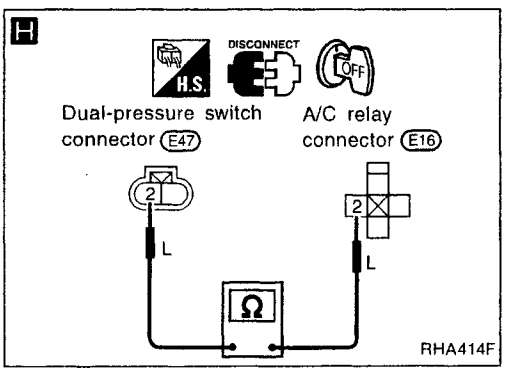

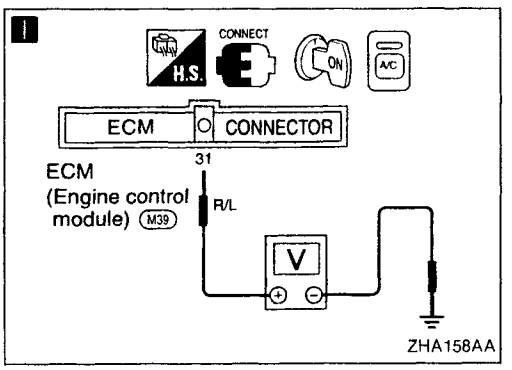

Ⓐ

Reconnect A/C relay.

F

CHECK COIL SIDE CIRCUIT OF A/C RELAY.
Do approx. 12 volts exist between ECM (Engine control module) harness terminal ⑧ and body ground?

No → Disconnect ECM (Engine control module) harness connector.
Disconnect dual-pressure switch harness connector.

Yes

G

Note

CHECK CIRCUIT CONTINUITY BETWEEN ECM (ENGINE CONTROL MODULE) HARNESS TERMINAL ⑧ AND DUAL-PRESSURE SWITCH HARNESS TERMINAL ①.
Continuity should exist.
If OK, check harness for short.

OK

CHECK DUAL-PRESSURE SWITCH. Refer to HA-64.

NG → Replace dual-pressure switch.

H

Note

CHECK CIRCUIT CONTINUITY BETWEEN A/C RELAY HARNESS TERMINAL ② AND DUAL-PRESSURE SWITCH HARNESS TERMINAL ②.
Continuity should exist.
If OK, check harness for short.

I

CHECK VOLTAGE FOR ECM (Engine control unit).
Do approx. 12 volts exist between ECM (Engine control module) harness terminal No. ㉛ and body ground?

No → CHECK ECM (Engine control module). (Refer to EC section.)

Yes

Disconnect ECM (Engine control module) harness connector.
Disconnect thermo control amp. harness connector.

Ⓑ

(Go to next page.)

Note:
If the result is NG or No after checking circuit continuity, repair harness or connector.

Simpo PDF Merge and Split Unregistered Version - http://www.simpopdf.com

Diagnostic Procedure 3 (Cont'd)

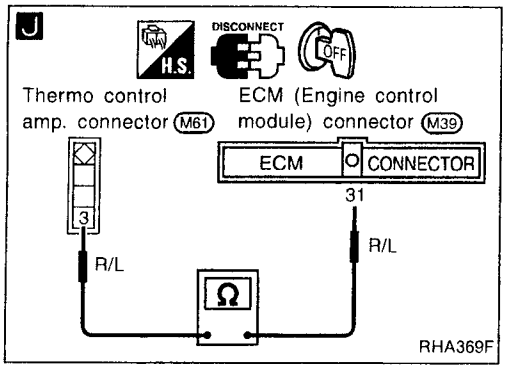

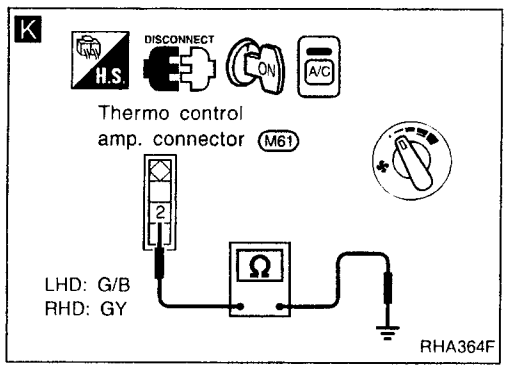

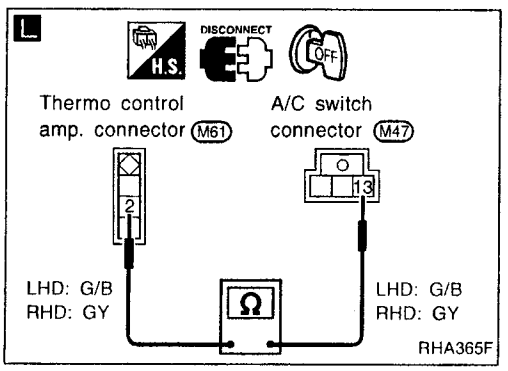

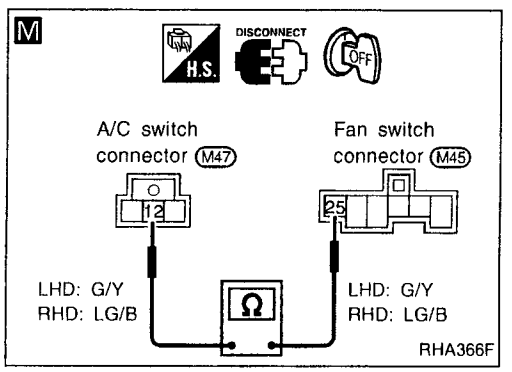

Ⓑ

J — Note

CHECK CIRCUIT CONTINUITY BETWEEN ECM (ENGINE CONTROL MODULE) HARNESS TERMINAL ㉛ AND THERMO CONTROL AMP. HARNESS TERMINAL ③.
Continuity should exist.
If OK, check harness for short.

↓OK

Reconnect thermo control amp. harness connector.

Note

CHECK POWER SUPPLY FOR THERMO CONTROL AMP.
Refer to HA-49.

K

CHECK BODY GROUND CIRCUIT FOR THERMO CONTROL AMP.
Disconnect thermo control amp. harness connector.
Does continuity exist between thermo control amp. harness terminal ② and body ground?

Yes → Replace thermo control amp.

↓No

Disconnect A/C switch harness connector.

L — Note

CHECK CIRCUIT CONTINUITY BETWEEN THERMO CONTROL AMP. HARNESS TERMINAL ② AND A/C SWITCH HARNESS TERMINAL ⑬.
Continuity should exist.
If OK, check harness for short.

↓OK

CHECK A/C SWITCH.
Refer to HA-63.

NG → Replace A/C switch.

↓OK

Disconnect fan switch harness connector.

M — Note

CHECK CIRCUIT CONTINUITY BETWEEN A/C SWITCH HARNESS TERMINAL ⑫ AND FAN SWITCH HARNESS TERMINAL ㉕.
Continuity should exist.
If OK, check harness for short.

↓OK

Ⓒ

(Go to next page.)

Note:
If the result is NG or No after checking circuit continuity, repair harness or connector.

HA

Simpo PDF Merge and Split Unregistered Version - http://www.simpopdf.com

Diagnostic Procedure 3 (Cont'd)

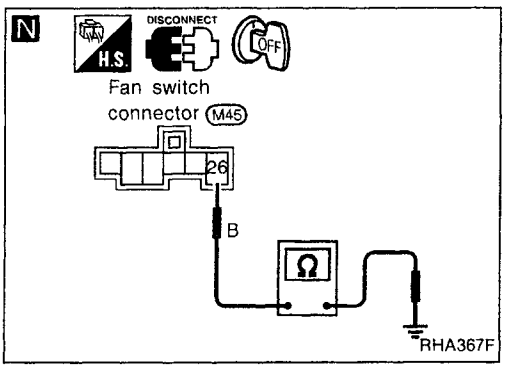

Ⓒ

N Note

CHECK BODY GROUND CIRCUIT FOR FAN SWITCH.
Does continuity exist between fan switch harness terminal ㉖ and body ground?

Yes

CHECK FAN SWITCH.
Refer to HA-62.

NG → Replace fan switch.

Note:
If the result is NG or No after checking circuit continuity, repair harness or connector.

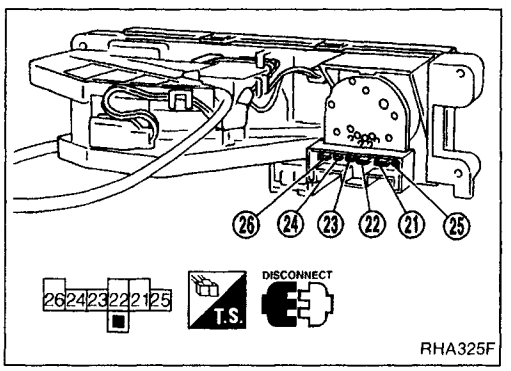

Electrical Components Inspection

FAN SWITCH

Check continuity between terminals at each switch position.

LEVER POSITION	Continuity between terminals
OFF	
1	㉔ — ㉖ — ㉕
2	㉓ — ㉖ — ㉕
3	㉒ — ㉖ — ㉕
4	㉑ — ㉖ — ㉕

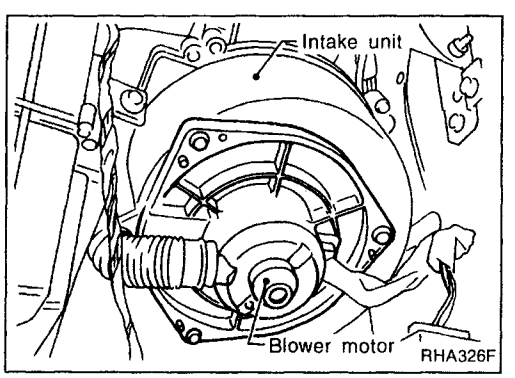

BLOWER MOTOR

Confirm smooth rotation of the blower motor.

- Ensure that there are no foreign particles inside the intake unit.

Simpo PDF Merge and Split Unregistered Version - http://www.simpopdf.com

Electrical Components Inspection (Cont'd)

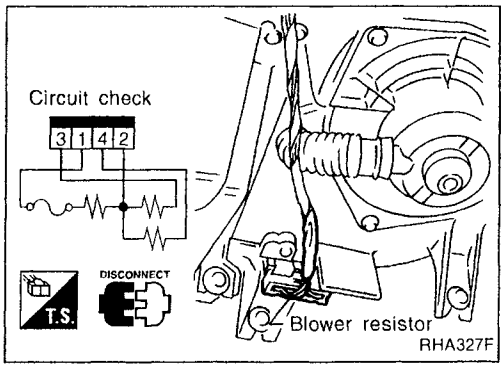

BLOWER RESISTOR

Check resistance between terminals.

Terminal No.		Resistance
⊕	⊖	
③	①	Approx. 1.4 - 1.6Ω
④		Approx. 2.5 - 2.8Ω
②		Approx. 0.5 - 0.6Ω

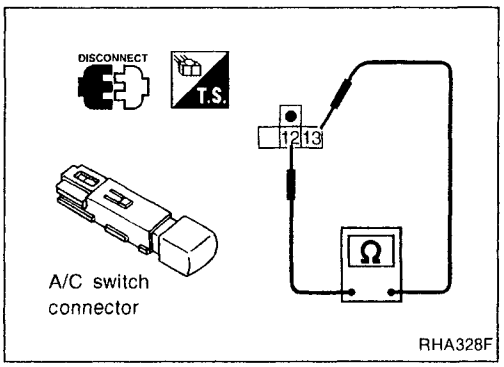

A/C SWITCH

Check continuity between terminals at each switch position.

Switch condition	Terminal No.		Continuity
A/C	⊕	⊖	
ON	⑬	⑫	Yes
OFF			No

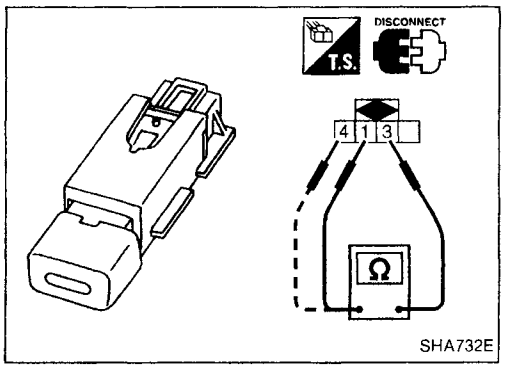

RECIRCULATION SWITCH

Check continuity between terminals at each switch position.

Terminal No.		Recirculation switch condition	Continuity
⊕	⊖		
①	③	ON	Yes
		OFF	No
④	③	ON	No
		OFF	Yes

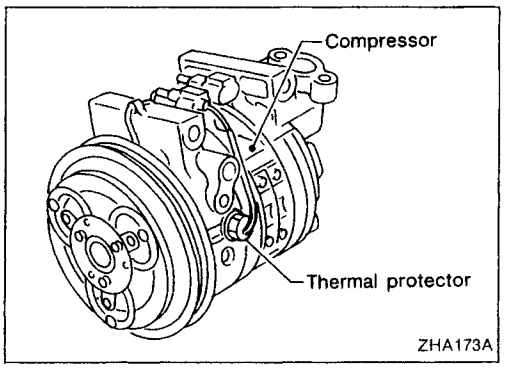

THERMAL PROTECTOR

Temperature of compressor °C (°F)	Compressor operation
Increasing to approx. 145 - 155 (293 - 311)	Turn OFF
Decreasing to approx. 130 - 140 (266 - 284)	Turn ON

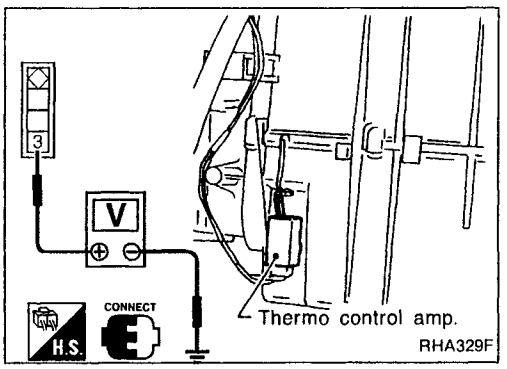

THERMO CONTROL AMP.

1. Run engine, and operate A/C system.
2. Connect the voltmeter from harness side.
3. Check thermo control amp. operation shown in the table.

Evaporator outlet air temperature °C (°F)	Thermo amp. operation	Tester
Decreasing to 2.5 - 3.5 (37 - 38)	Turn OFF	Approx. 12V
Increasing to 4.0 - 5.0 (39 - 41)	Turn On	Approx. 0V

HA

Simpo PDF Merge and Split Unregistered Version - http://www.simpopdf.com

Electrical Components Inspection (Cont'd)

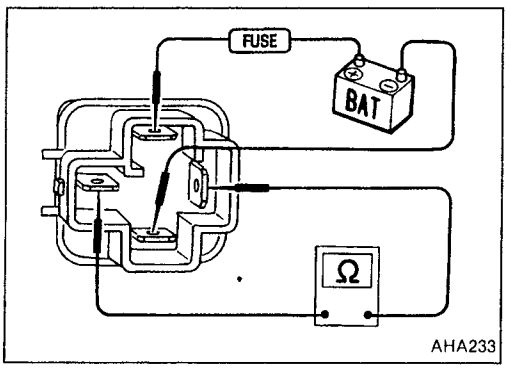

AHA233

A/C RELAY

Check continuity between terminals ③ and ⑤.

Conditions	Continuity
12V direct current supply between terminals ① and ②	Yes
No current supply	No

If NG, replace relay.

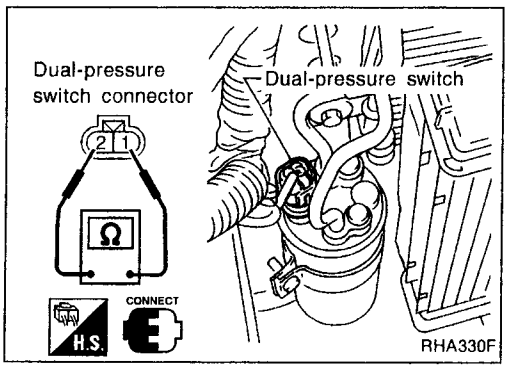

RHA330F

DUAL-PRESSURE SWITCH

	ON kPa (bar, kg/cm², psi)	OFF kPa (bar, kg/cm², psi)
Low-pressure side	Increasing to 157 - 216 (1.57 - 2.16, 1.6 - 2.2, 23 - 31)	Decreasing to 157 - 196 (1.57 - 1.96, 1.6 - 2.0, 23 - 28)
High-pressure side	Decreasing to 1,863 - 2,256 (18.6 - 22.6, 19 - 23, 270 - 327)	Increasing to 2,452 - 2,844 (24.5 - 28.4, 25 - 29, 356 - 412)

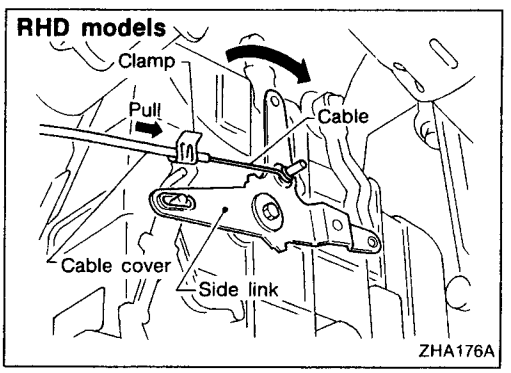

ZHA176A

Control Linkage Adjustment

MODE CONTROL CABLE

1. For RHD models, turn the mode control knob to the VENT position.
   For LHD models, turn the mode control knob to the DEF position.
2. For RHD models, set the side link in the VENT position by hand.
   For LHD models, set the side link in the DEF position by hand.
3. Pull on the cable cover in the direction of the arrow, then clamp it.

After positioning control cable, check that it operates properly.

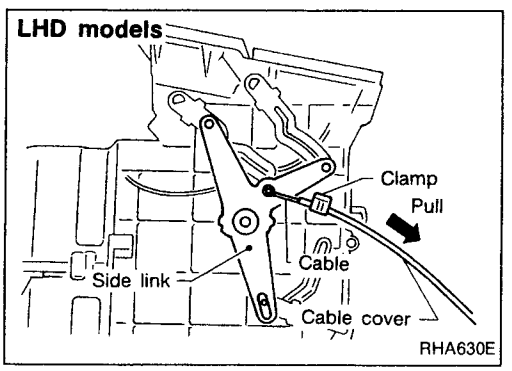

RHA630E

WATER COCK CONTROL ROD

- **When adjusting water cock control rod, first disconnect temperature control cable from air mix door lever and then adjust control rod. Reconnect temperature control cable and readjust it. (Refer to TEMPERATURE CONTROL CABLE.)**

1. Push air mix door lever in direction of arrow.
2. Pull control rod of water cock in direction of arrow so as to make clearance of about 2 mm (0.08 in) between ends of rod and link lever and connect the rod to door lever.

After connecting control rod, check it operates properly.

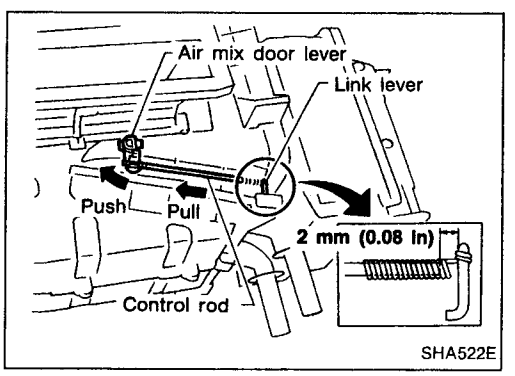

SHA522E

Simpo PDF Merge and Split Unregistered Version - http://www.simpopdf.com

Control Linkage Adjustment (Cont'd)

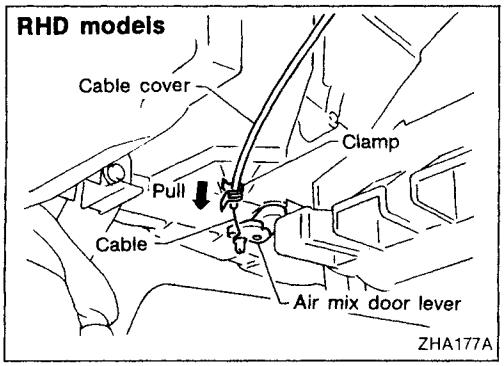

TEMPERATURE CONTROL CABLE

1. For RHD models, move the temperature control knob to the full cold position.
   For LHD models, move the temperature control knob to the full hot position.
2. For RHD models, set the air mix door lever in the full cold position.
   For LHD models, set the air mix door lever in the full hot position.
3. Pull on the cable cover in the direction of the arrow, then clamp it.

After positioning control cable, check that it operates properly.

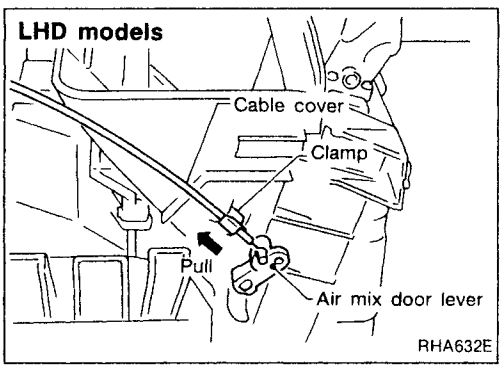

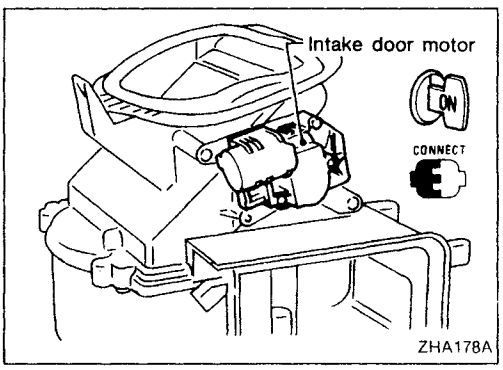

INTAKE DOOR MOTOR

1. Install intake door motor on intake unit.
   Ensure that the intake door motor lever is fitted into the slit portion of intake door link.
2. Connect the intake door motor harness connector.
3. Turn ignition switch to ON.
4. Check that intake door operates properly when REC switch is turned ON and OFF.

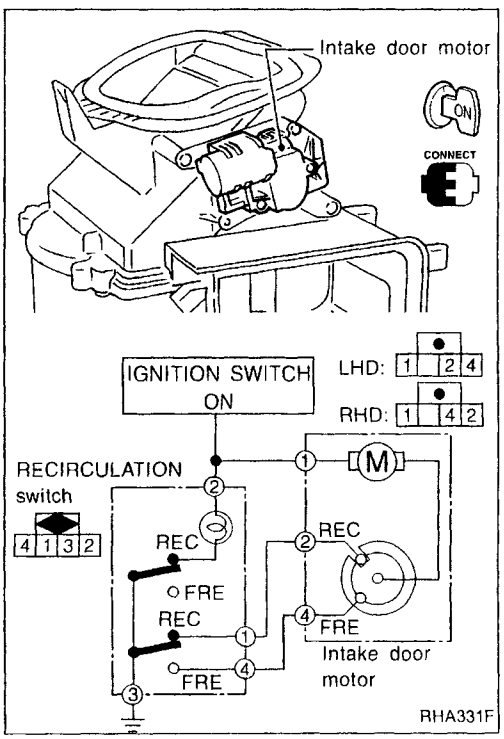

System Description

INTAKE DOOR MOTOR

The intake door motor is installed on the intake unit. Using a link it opens and closes the intake door.
When RECIRCULATION switch is ON, the ground line of the motor is switched from terminal ④ to ②. This starts the motor because the position switch contacts built into it make current flow. When RECIRCULATION switch is OFF, the ground line is switched from terminal ② to ④. The contacts turn along with the motor. When they reach the non-current flow position, the motor will stop. The motor always turns in the same direction.

HA

Simpo PDF Merge and Split Unregistered Version - http://www.simpopdf.com

HFC-134a (R-134a) Service Procedure

SETTING OF SERVICE TOOLS AND EQUIPMENT

DISCHARGING REFRIGERANT

WARNING:

Avoid breathing A/C refrigerant and lubricant vapor or mist. Exposure may irritate eyes, nose and throat. Remove HFC-134a (R-134a) from A/C system using certified service equipment meeting requirements of HFC-134a (R-134a) recycling equipment or HFC-134a (R-134a) recovery equipment. If accidental system discharge occurs, ventilate work area before resuming service. Additional health and safety information may be obtained from refrigerant and lubricant manufacturers.

Example

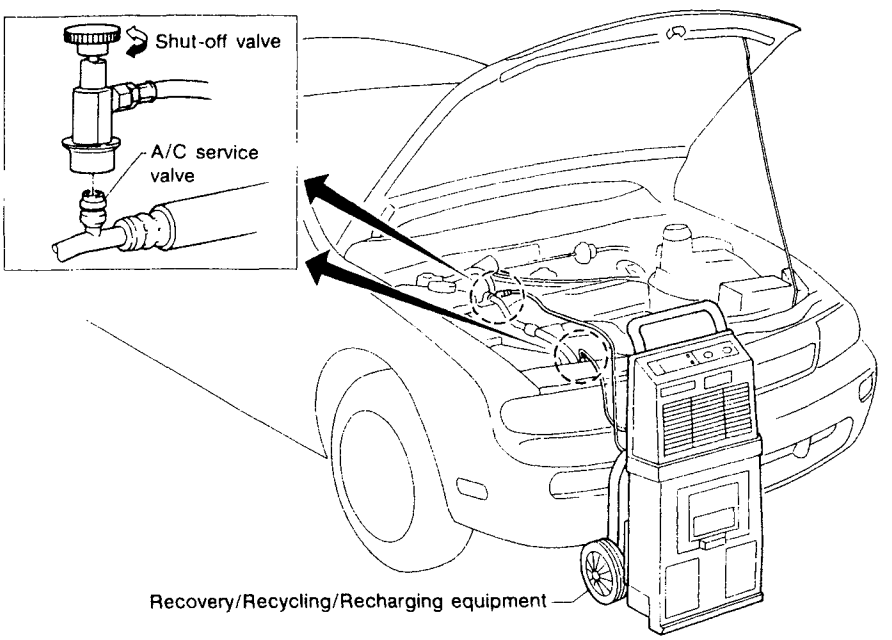

SHA539DC

EVACUATING SYSTEM AND CHARGING REFRIGERANT

Example

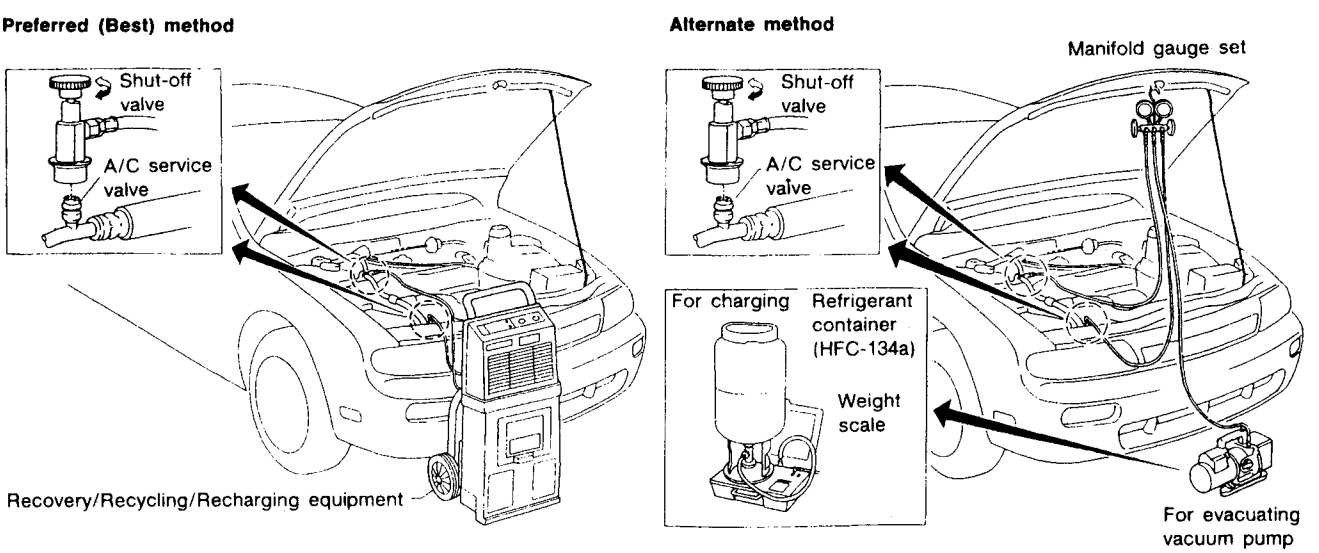

SHA540DC

Simpo PDF Merge and Split Unregistered Version - http://www.simpopdf.com

HFC-134a (R-134a) Service Procedure (Cont'd)

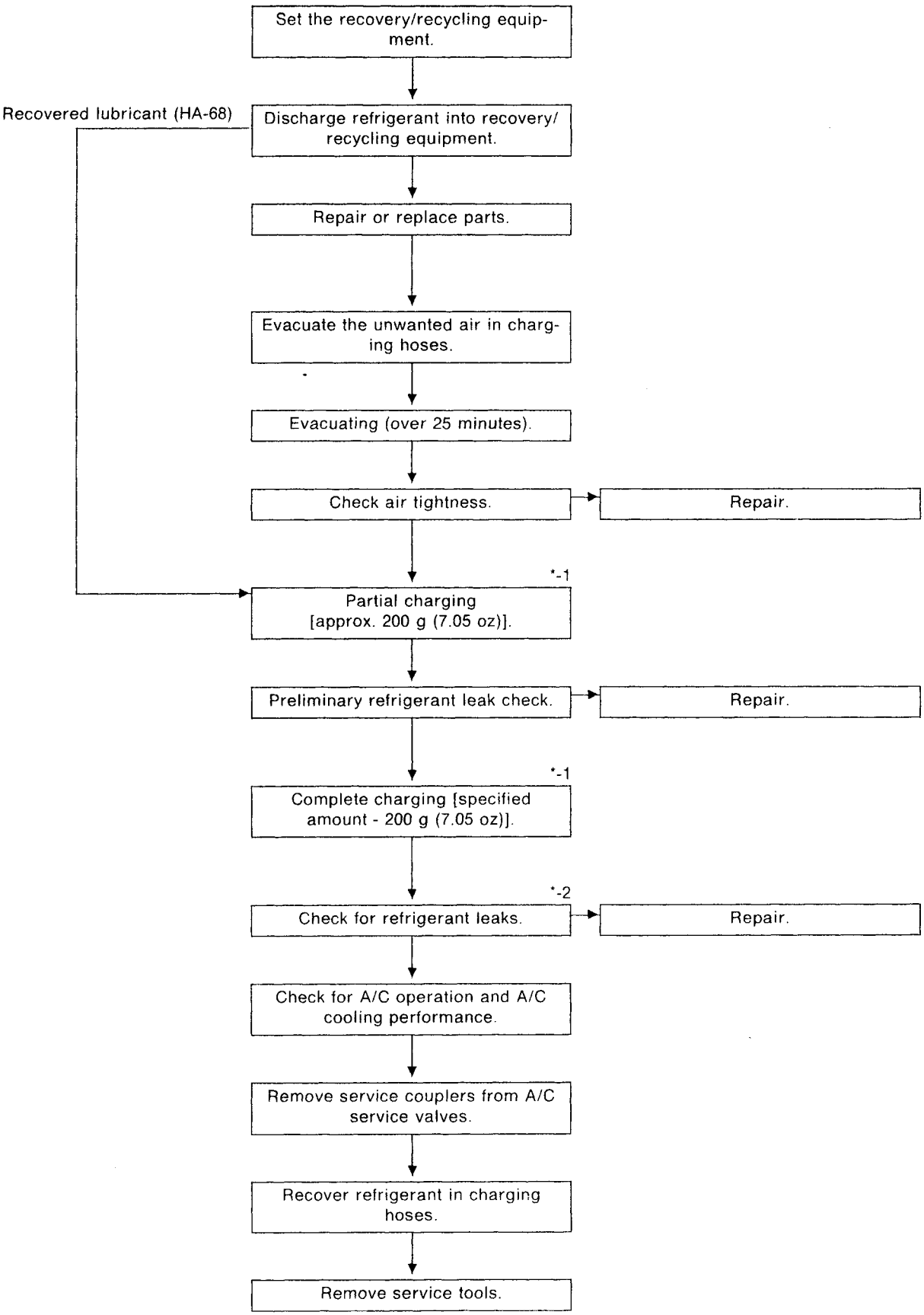

Note: *-1 Before charging refrigerant, ensure engine is off.
*-2 Before checking for leaks, start engine to activate air conditioning system then turn it off. Service valve caps must be attached to valves (to prevent leakage).

Simpo PDF Merge and Split Unregistered Version - http://www.simpopdf.com

Maintenance of Lubricant Quantity in Compressor

The lubricant in the compressor circulates through the system with the refrigerant. Add lubricant to compressor when replacing any component or after a large gas leakage occurred. It is important to maintain the specified amount.
If lubricant quantity is not maintained properly, the following malfunctions may result:

- Lack of lubricant: May lead to a seized compressor
- Excessive lubricant: Inadequate cooling (thermal exchange interference)

LUBRICANT

Name: Nissan A/C System Oil Type R
Part number: KLH00-PAGR0

CHECKING AND ADJUSTING

Adjust the lubricant quantity according to the flowchart shown below.

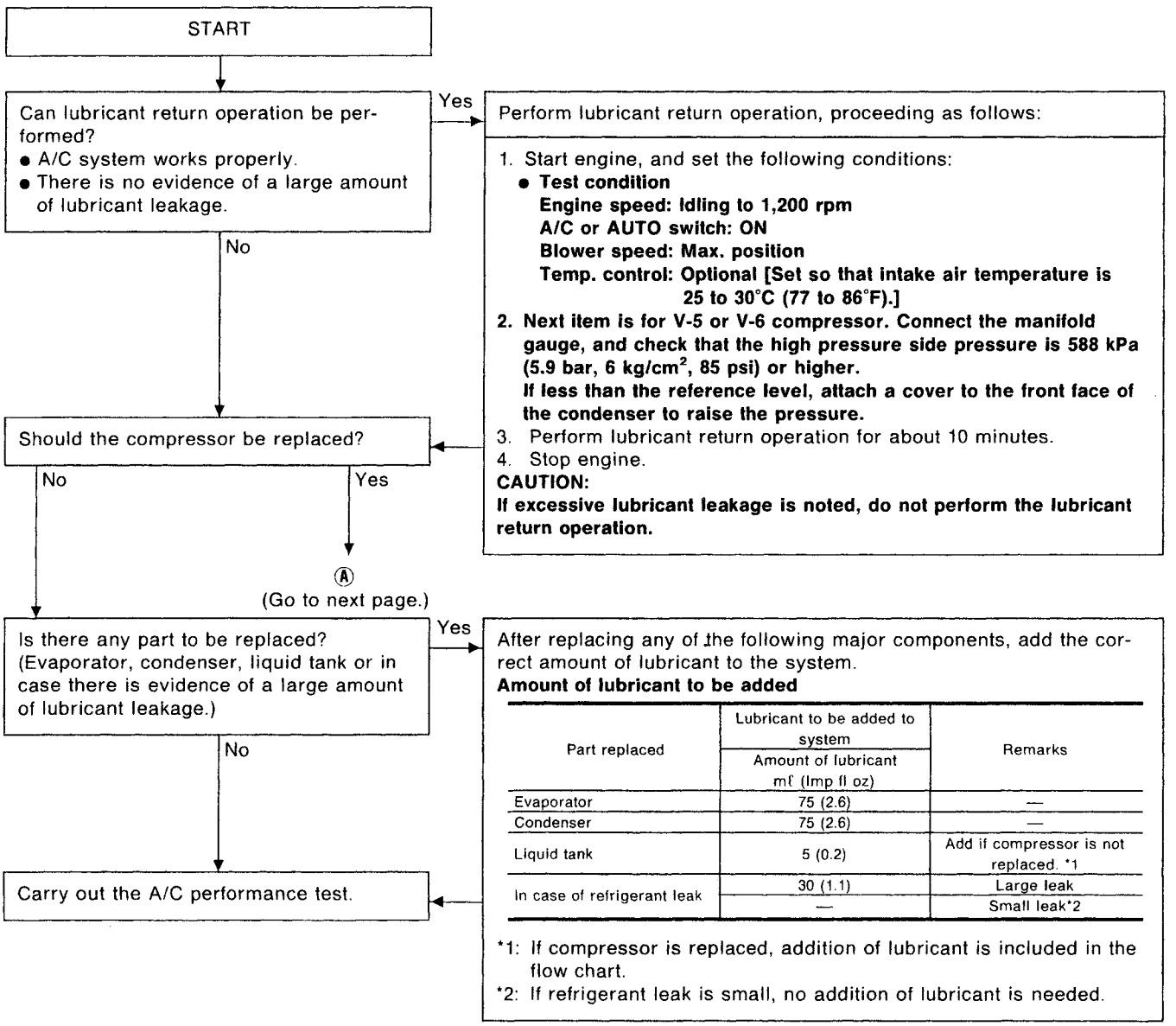

Simpo PDF Merge and Split Unregistered Version - http://www.simpopdf.com

Maintenance of Lubricant Quantity in Compressor (Cont'd)

Ⓐ

1. Discharge refrigerant into the refrigerant recovery/recycling equipment. Measure lubricant discharged into the recovery/ recycling equipment.
2. Remove the drain plug of the "old" (removed) compressor (applicable only to V-5, V-6 or DKS-16H compressor). Drain the lubricant into a graduated container and record the amount of drained lubricant.
3. Remove the drain plug and drain the lubricant from the "new" compressor into a separate, clean container.
4. Measure an amount of new lubricant installed equal to amount drained from "old" compressor. Add this lubricant to "new" compressor through the suction port opening.
5. Measure an amount of new lubricant equal to the amount recovered during discharging. Add this lubricant to "new" compressor through the suction port opening.
6. Torque the drain plug.
   V-5 or V-6 compressor: 18 - 19 N·m (1.8 - 1.9 kg-m, 13 - 14 ft-lb)
   DKS-16H compressor: 14 - 16 N·m (1.4 - 1.6 kg-m, 10 - 12 ft-lb)
7. If the liquid tank also needs to be replaced, add an additional 5 mℓ (0.2 Imp fl oz) of lubricant at this time.
   Do not add this 5 mℓ (0.2 Imp fl oz) of lubricant if only replacing the compressor.

Lubricant adjusting procedure for compressor replacement

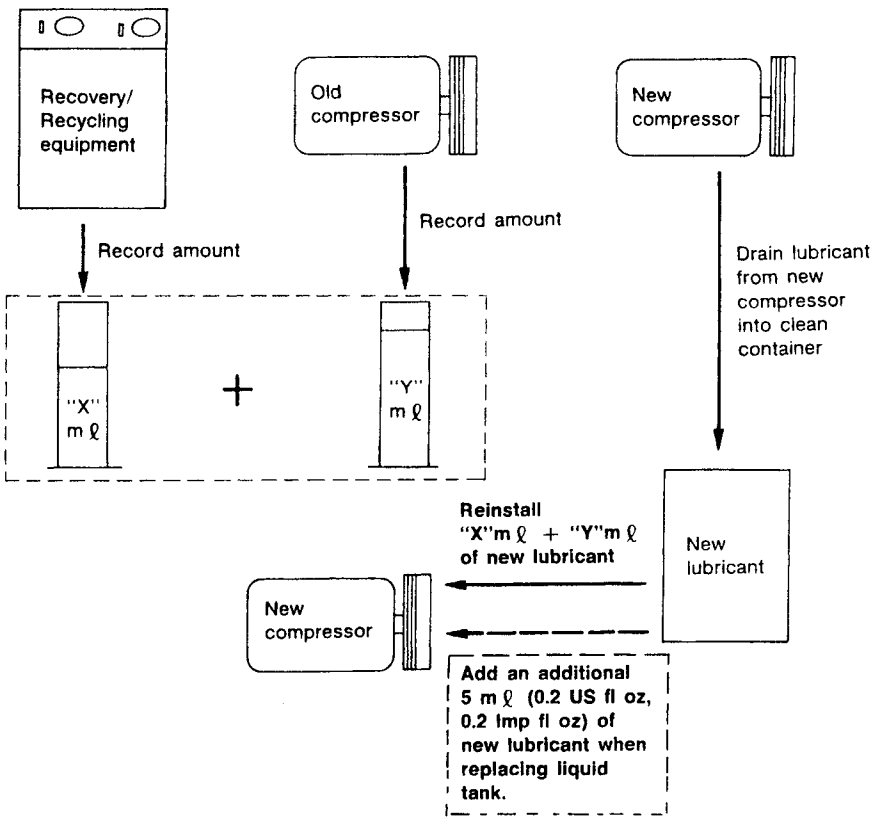

RHA065DD

HA

Simpo PDF Merge and Split Unregistered Version - http://www.simpopdf.com

Refrigerant Lines

- Refer to page HA-4 regarding "Precautions for Refrigerant Connection".

GA ENGINE RHD MODEL

SEC. 271·274·276

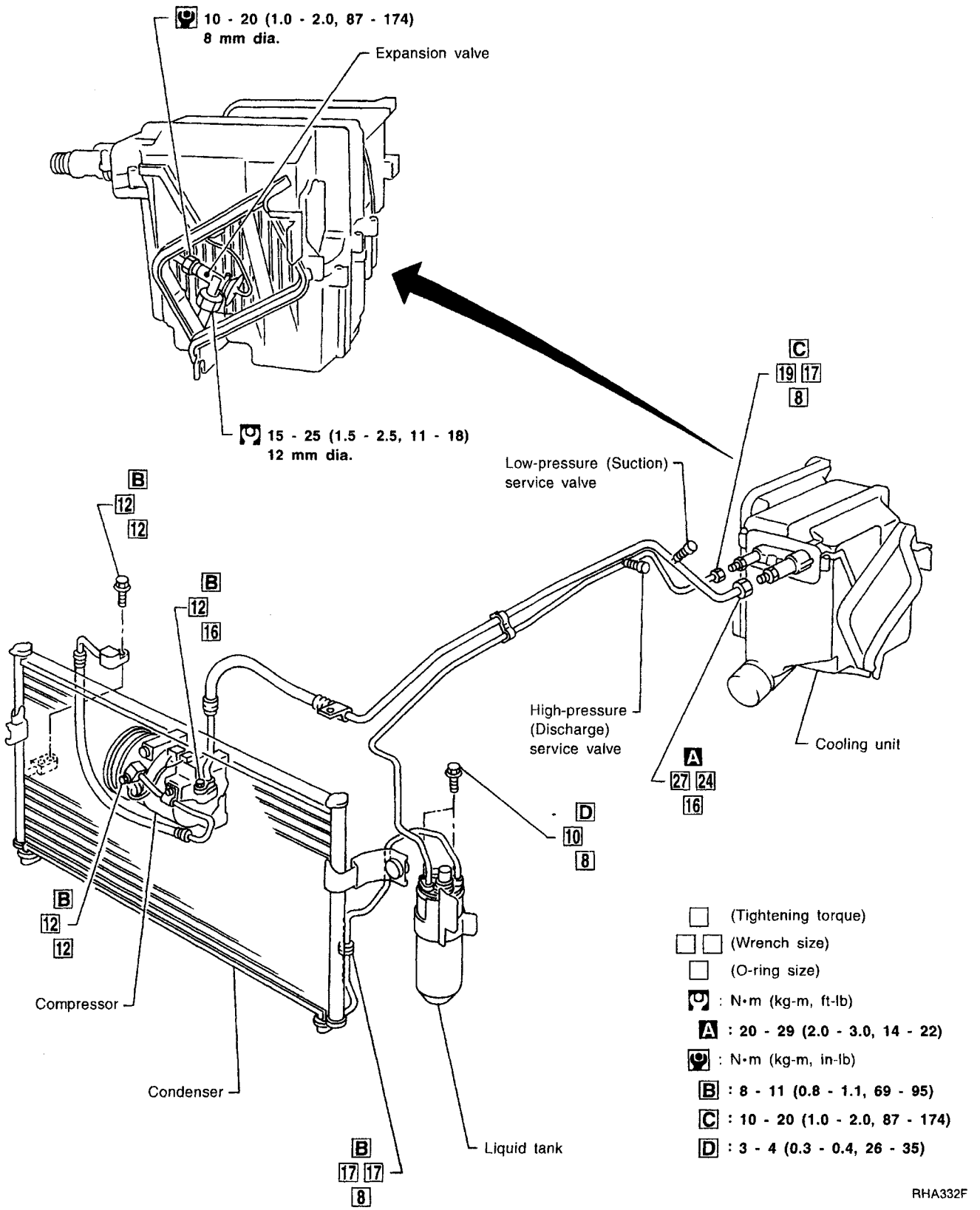

RHA332F

Simpo PDF Merge and Split Unregistered Version - http://www.simpopdf.com

Refrigerant Lines (Cont'd)

SR ENGINE RHD MODEL

SEC. 271·274·276

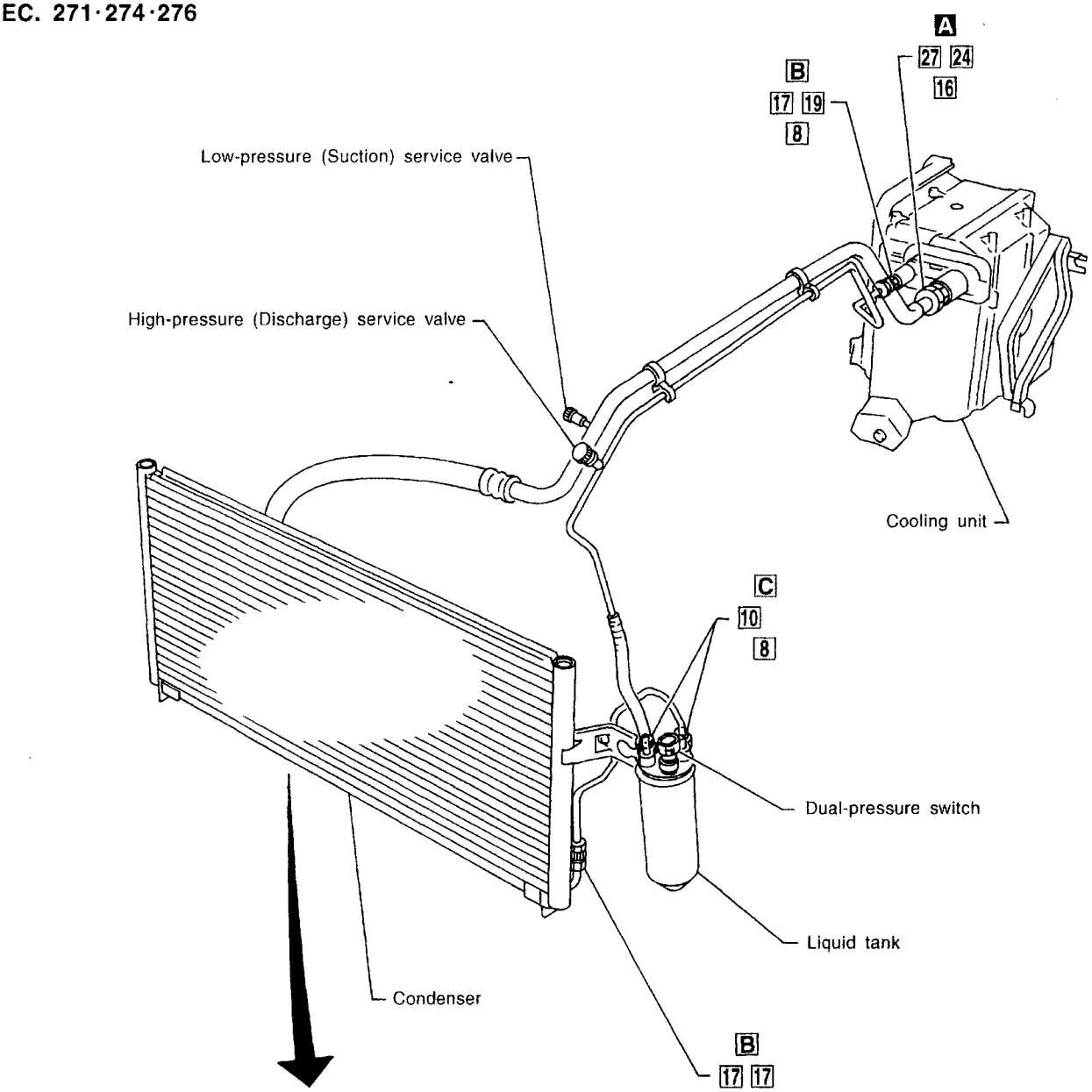

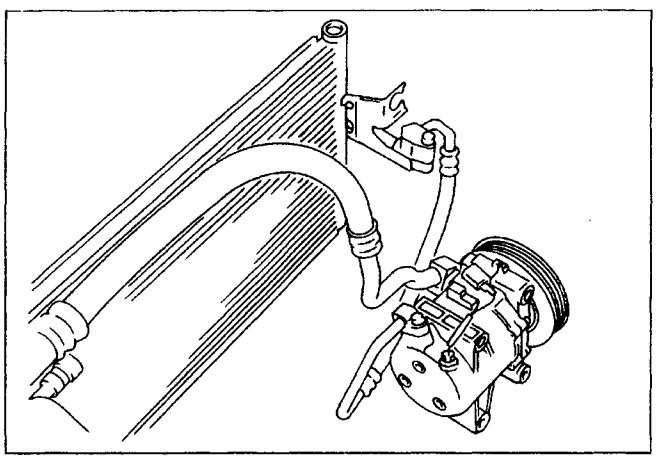

(Tightening torque)
(Wrench size)
(O-ring size)
: N•m (kg-m, ft-lb)
A : 25 - 34 (2.5 - 3.5, 18 - 25)
: N•m (kg-m, in-lb)
B : 10 - 20 (1.0 - 2.0, 87 - 174)
C : 8 - 11 (0.8 - 1.1, 69 - 95)
D : 2.9 - 3.9 (0.3 - 0.4, 26 - 35)

HA

RHA371F

Simpo PDF Merge and Split Unregistered Version - http://www.simpopdf.com

Refrigerant Lines (Cont'd)

CD ENGINE RHD MODEL

SEC. 271·274·276

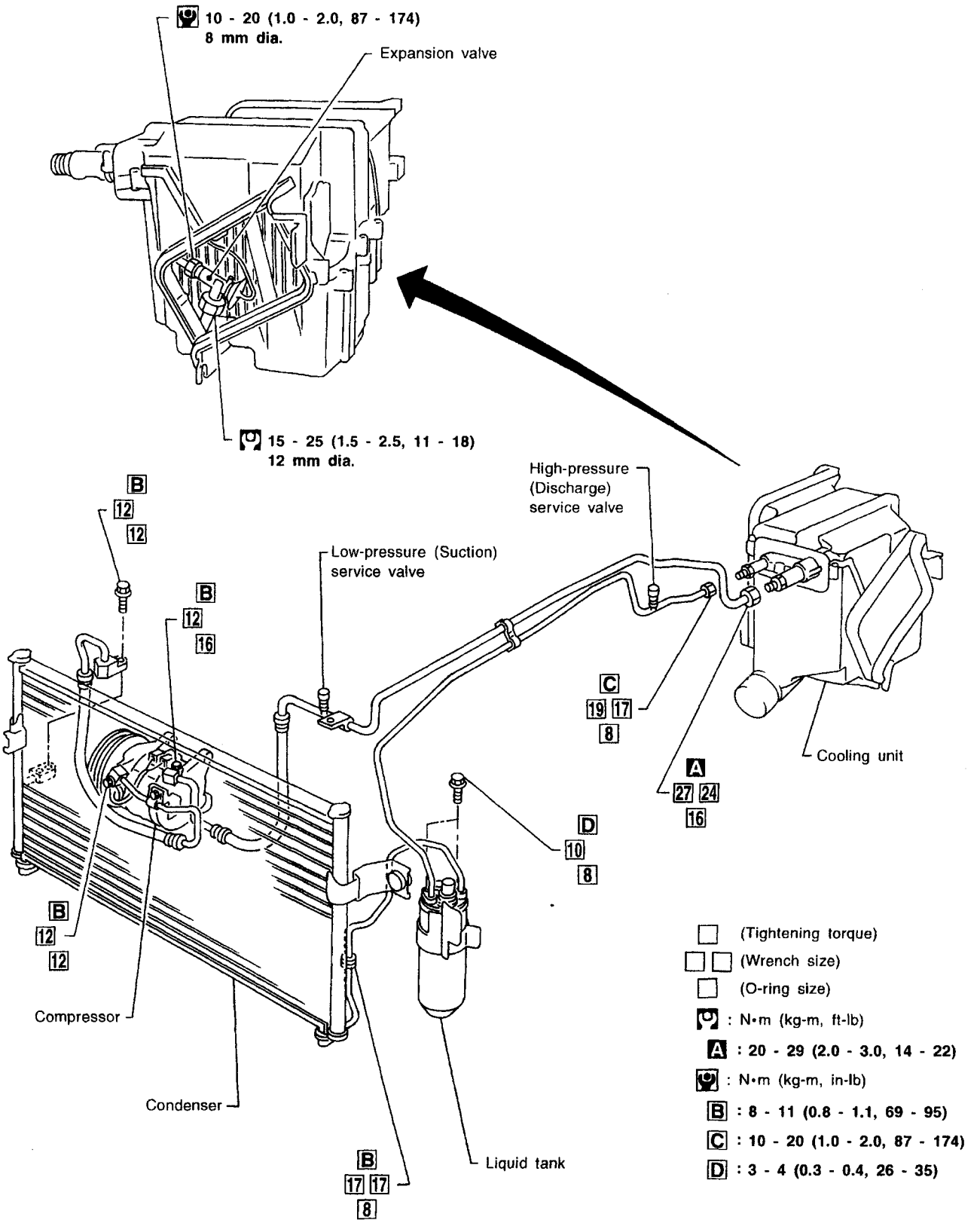

RHA333F

Simpo PDF Merge and Split Unregistered Version - http://www.simpopdf.com

Refrigerant Lines (Cont'd)

GA ENGINE LHD MODEL

SEC. 271·274·276

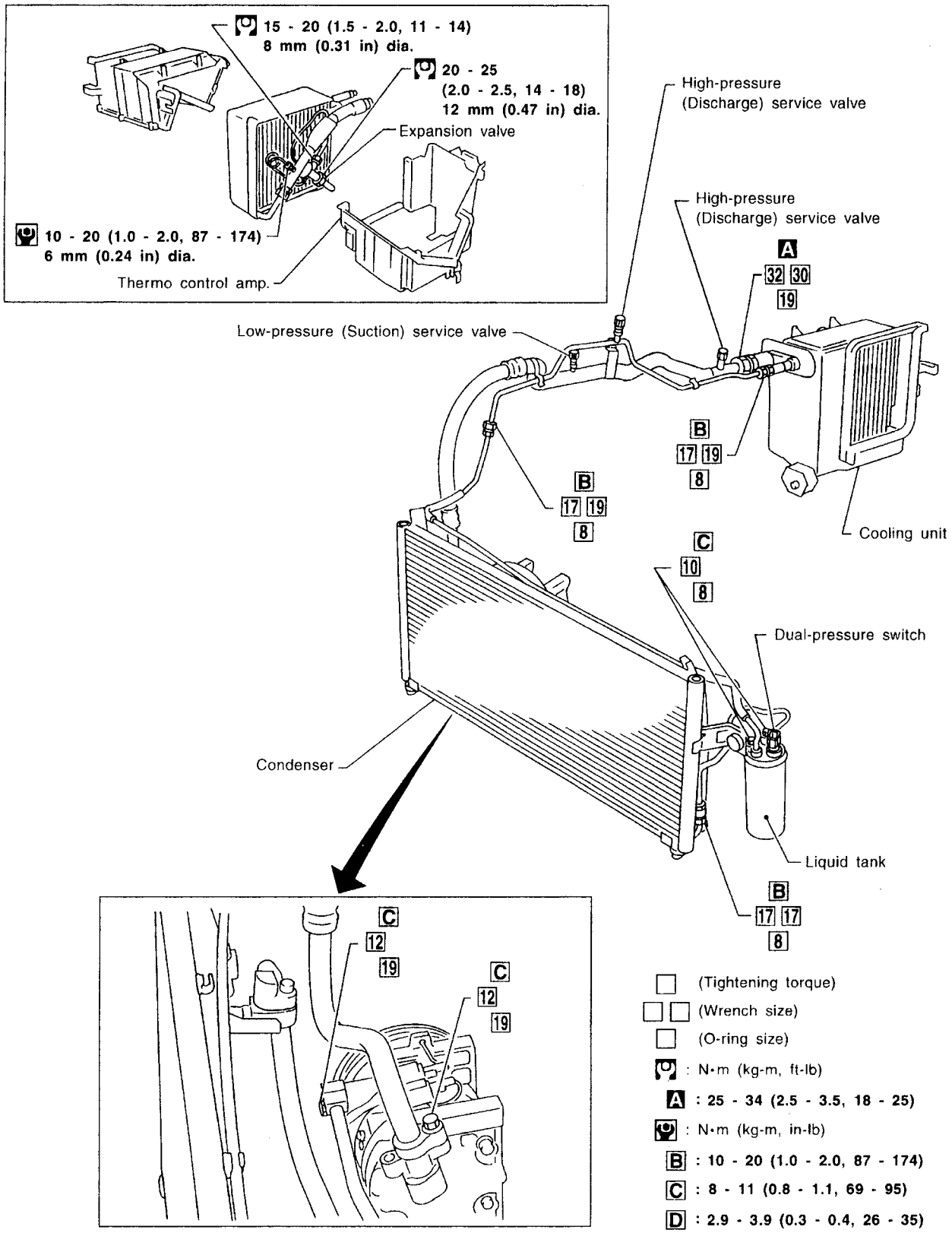

HA

RHA334F

Simpo PDF Merge and Split Unregistered Version - http://www.simpopdf.com

Refrigerant Lines (Cont'd)

CD ENGINE LHD MODEL

SEC. 271·274·276

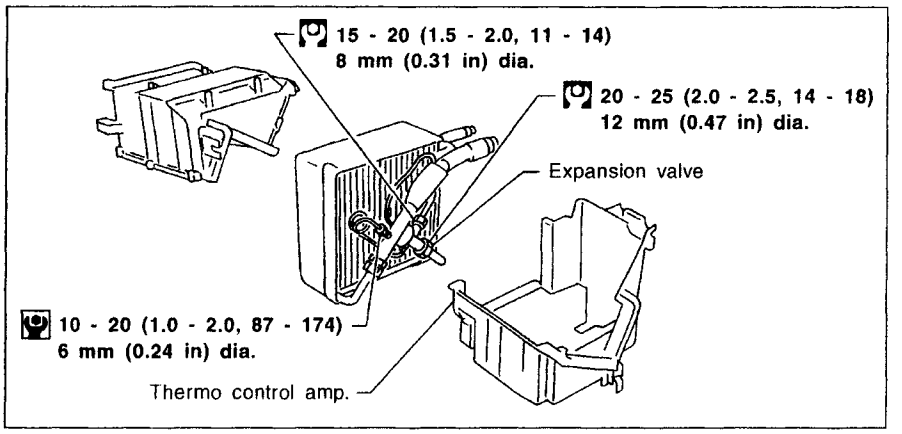

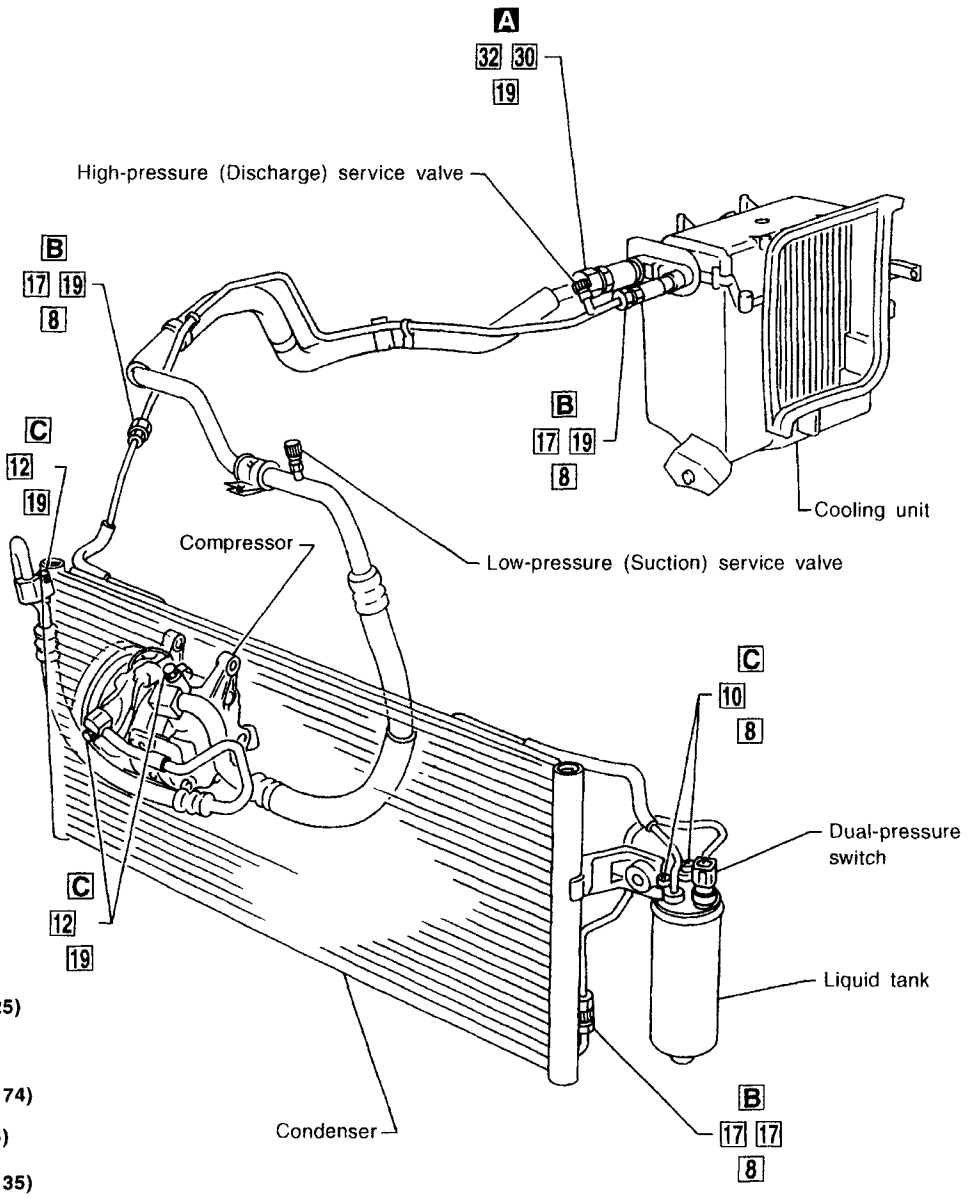

□ (Tightening torque)
□□ (Wrench size)
□ (O-ring size)
: N•m (kg-m, ft-lb)
A : 25 - 34 (2.5 - 3.5, 18 - 25)
: N•m (kg-m, in-lb)
B : 10 - 20 (1.0 - 2.0, 87 - 174)
C : 8 - 11 (0.8 - 1.1, 69 - 95)
D : 2.9 - 3.9 (0.3 - 0.4, 26 - 35)

RHA335F

Simpo PDF Merge and Split Unregistered Version - http://www.simpopdf.com

Compressor Mounting

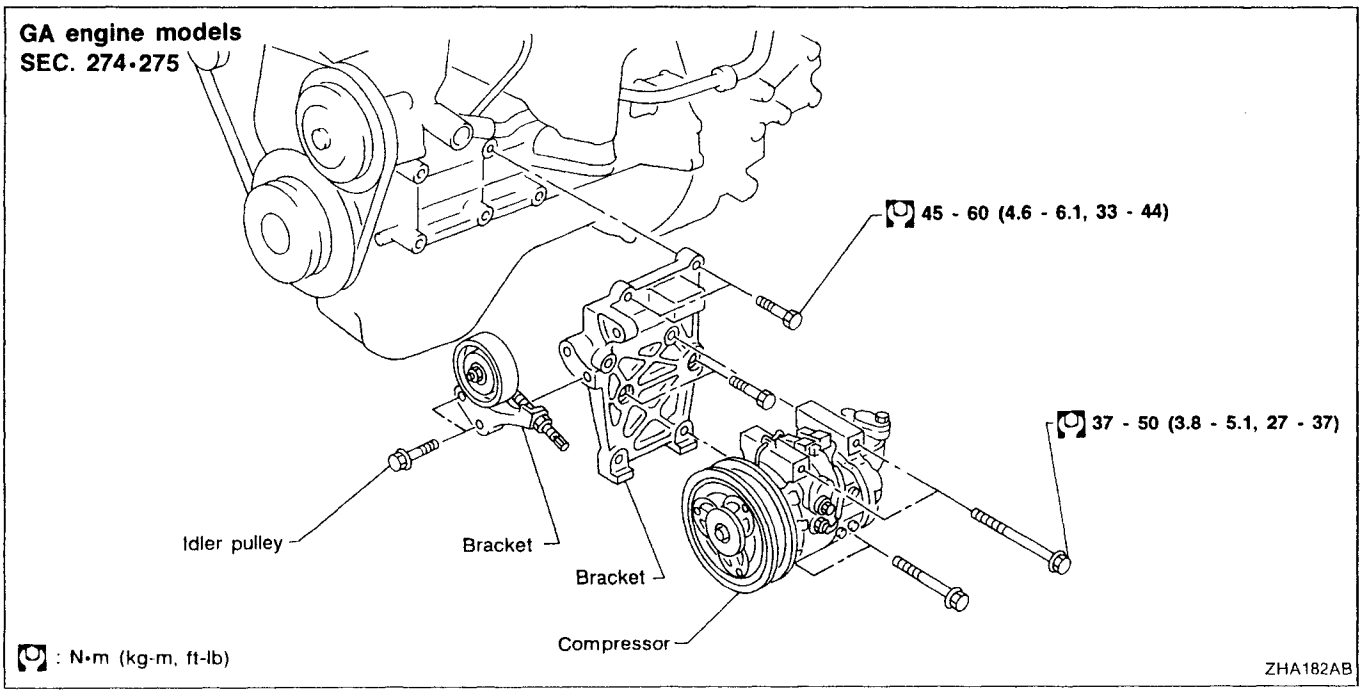

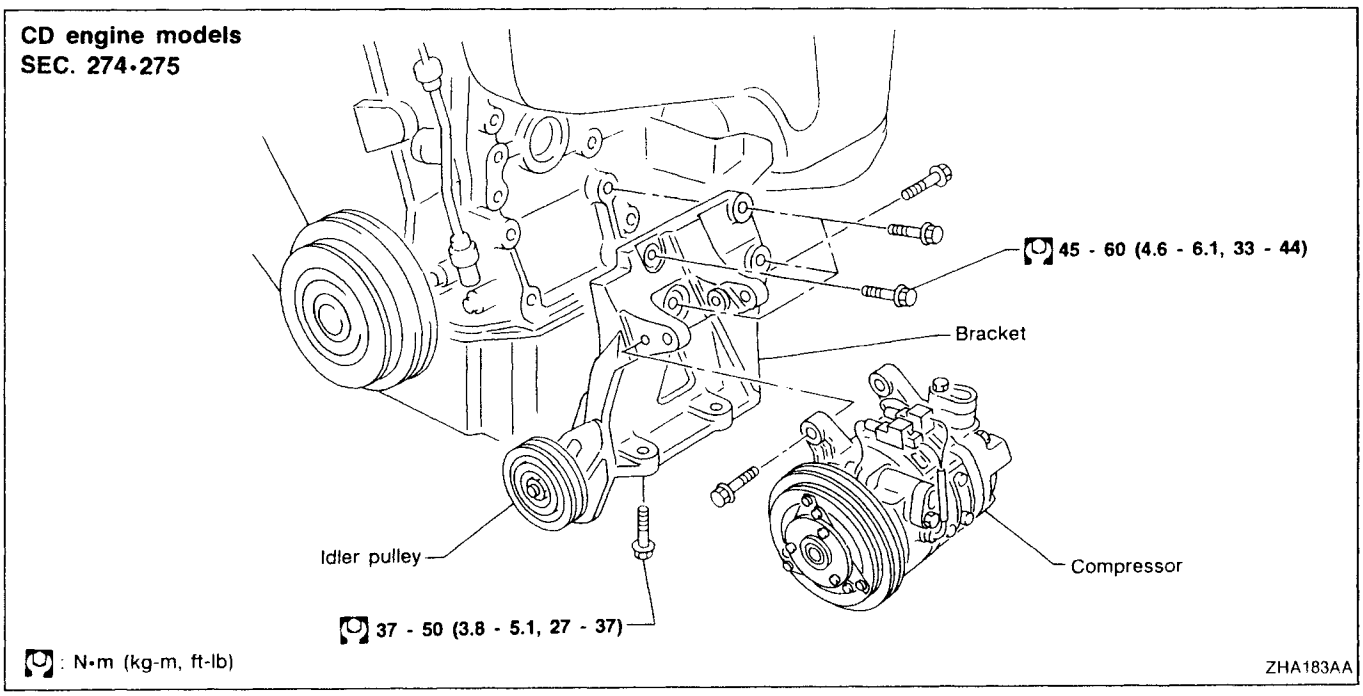

HA

Simpo PDF Merge and Split Unregistered Version - http://www.simpopdf.com

Compressor Mounting (Cont'd)

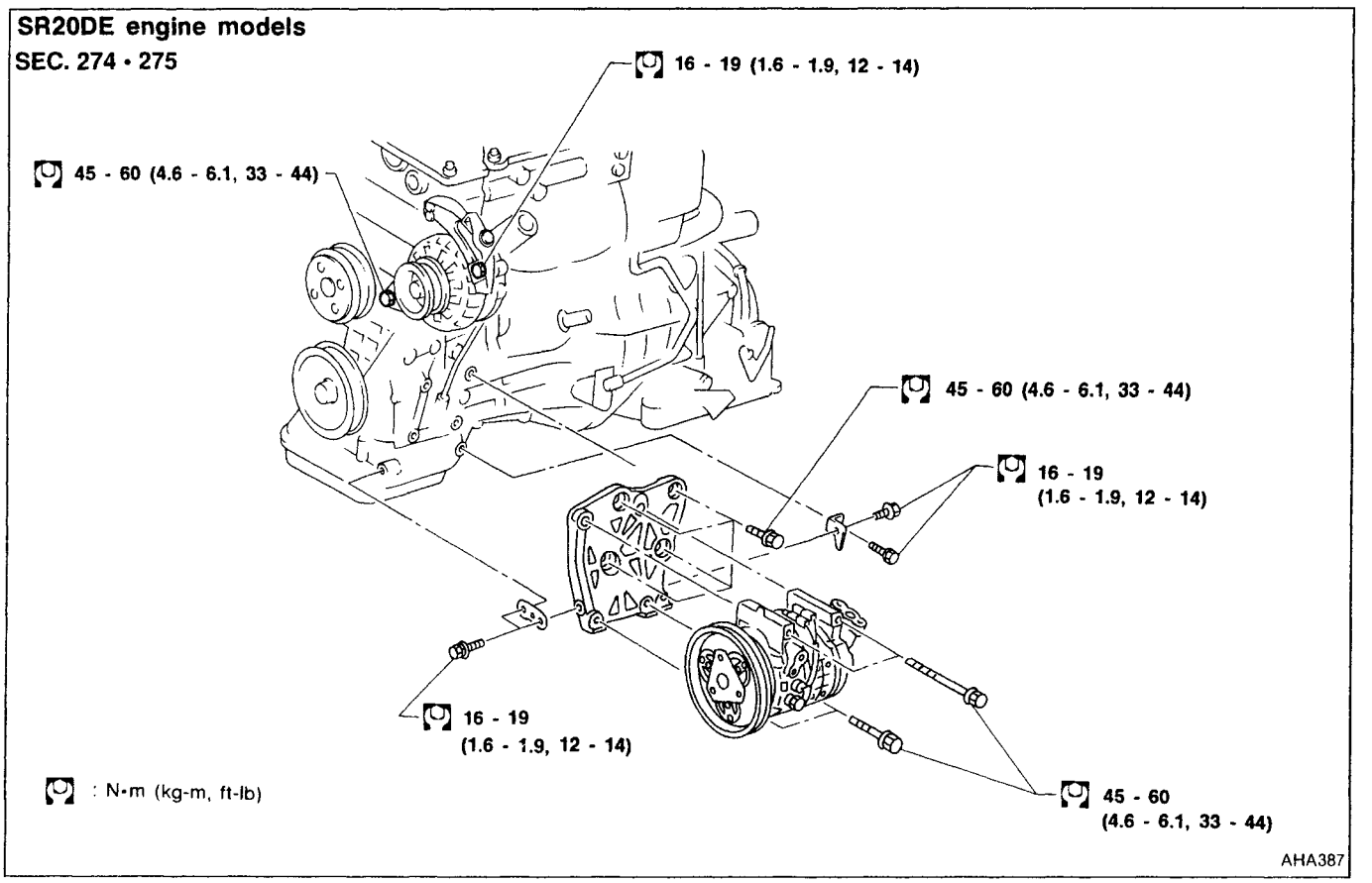

Belt Tension

- Refer to MA section.

Fast Idle Control Device (FICD)

- Refer to EC section.

Simpo PDF Merge and Split Unregistered Version - http://www.simpopdf.com

Compressor — Model DKV-11D and DKV-14D (ZEXEL make)

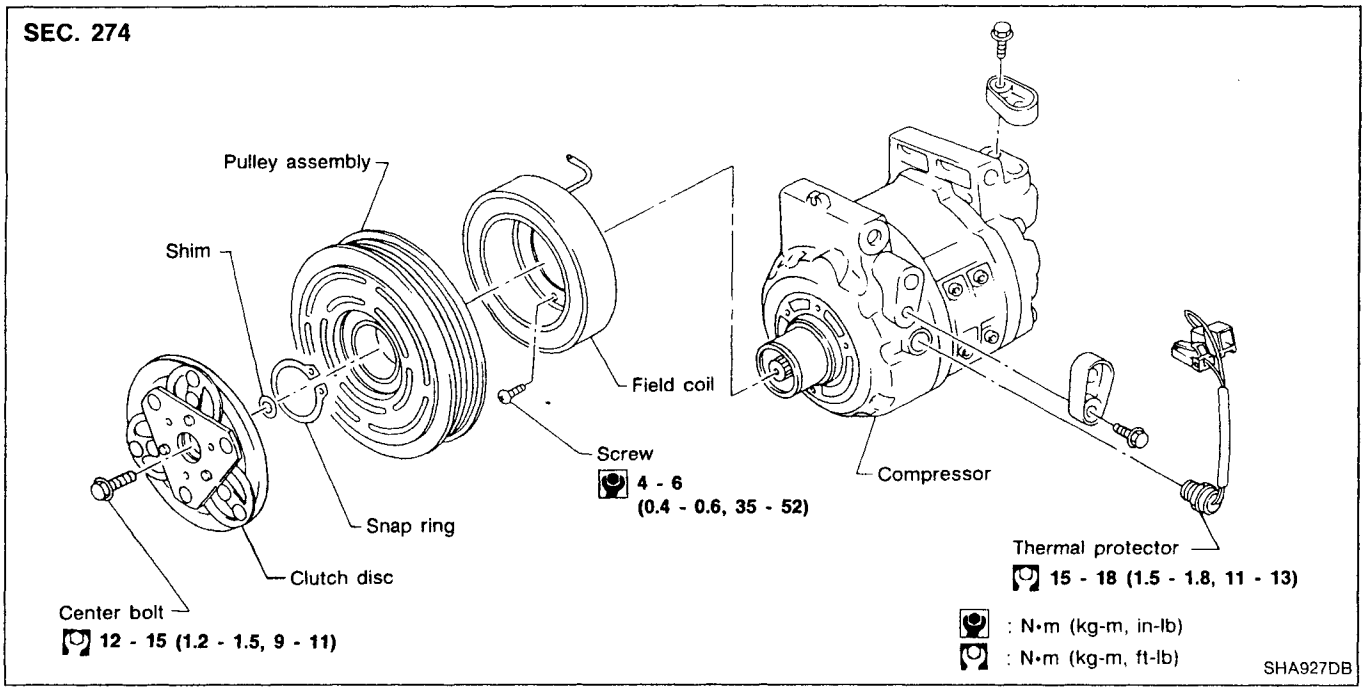

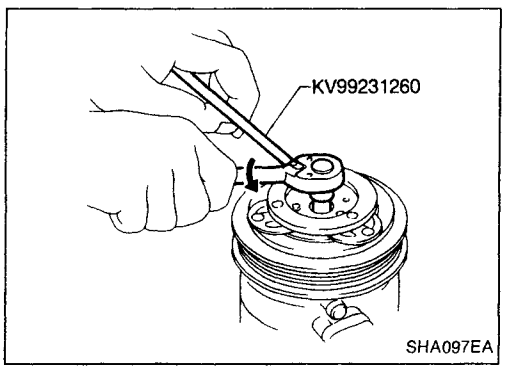

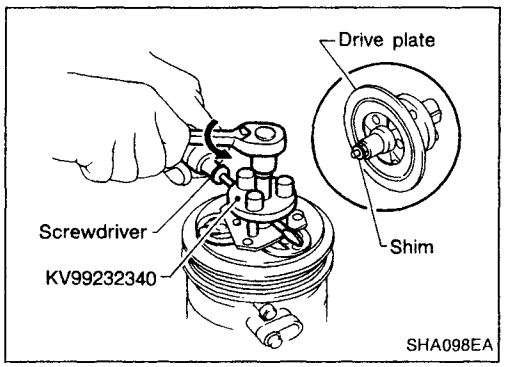

Compressor Clutch

REMOVAL

- When removing center bolt, hold clutch disc with clutch disc wrench.

- Remove the drive plate using Tool KV99232340.
  Insert holder's three pins into the drive plate. Rotate the holder clockwise to hook it onto the plate. Then, tighten the center bolt to remove the drive plate.
  When tightening the center bolt, insert a round bar (screwdriver, etc.) between two of the pins (as shown in the left-hand figure) to prevent drive plate rotation. After removing the drive plate, remove the shims from either the drive shaft or the drive plate.

HA

Simpo PDF Merge and Split Unregistered Version - http://www.simpopdf.com

Compressor Clutch (Cont'd)

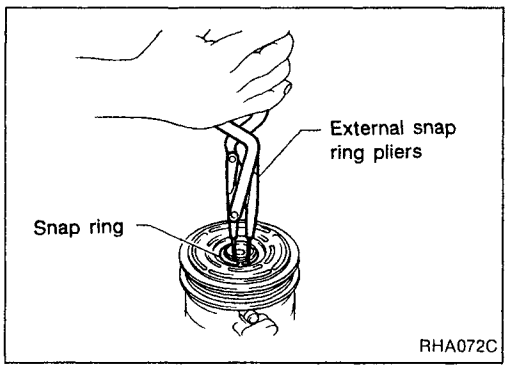

- Remove the snap ring using external snap ring pliers.

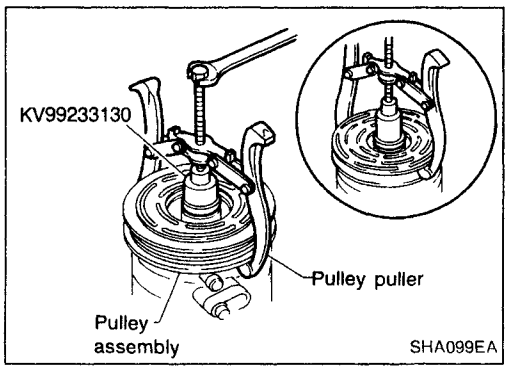

- Pulley removal
  Use any commercially available pulley puller. Position the center of it on the end of the drive shaft, and remove the pulley assembly.
  For pressed pulleys
  To prevent deformation of the pulley groove, the puller claws should be hooked into (not under) the pulley groove.
  For machine latched pulleys
  Align the pulley puller groove with the pulley groove, and then remove the pulley assembly.
- Remove the field coil harness clip using a screwdriver.

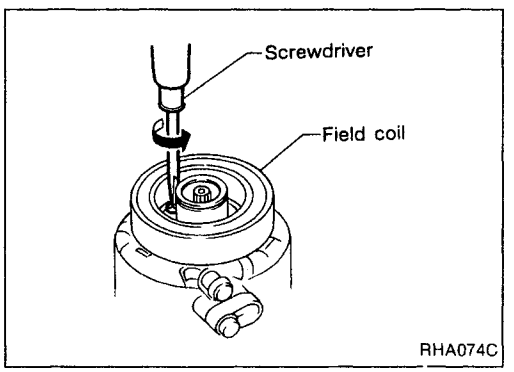

- Remove the three field coil fixing screws and remove the field coil.

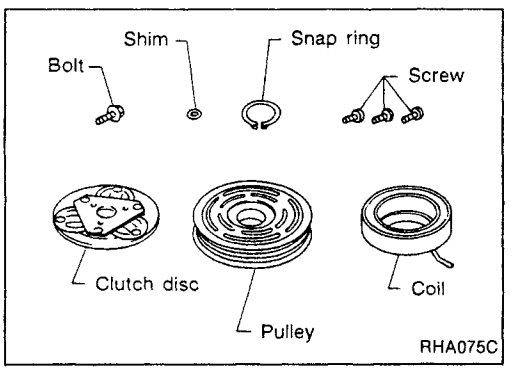

INSPECTION

Clutch disc: If the contact surface shows signs of damage due to excessive heat, replace clutch disc and pulley.
Pulley: Check the appearance of the pulley assembly. Check the contact surface of the pulley for any sign of excessive grooving due to slippage. If any sign is found, replace both the pulley and clutch disc. The contact surfaces of the pulley assembly should be cleaned with a suitable solvent before reinstallation.
Coil: Check coil for loose connection or cracked insulation.

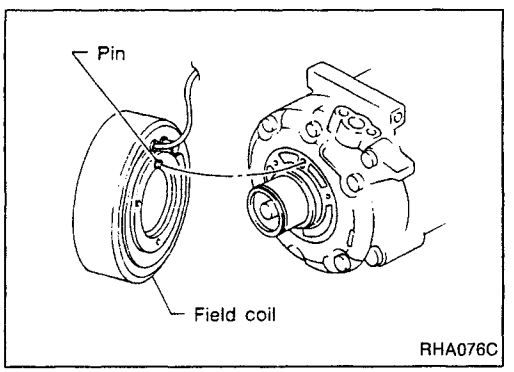

INSTALLATION

- Install the field coil.

Be sure to align the coil's pin with the hole in the compressor's front head.

- Install the field coil harness clip using a screwdriver.

Simpo PDF Merge and Split Unregistered Version - http://www.simpopdf.com

Compressor Clutch (Cont'd)

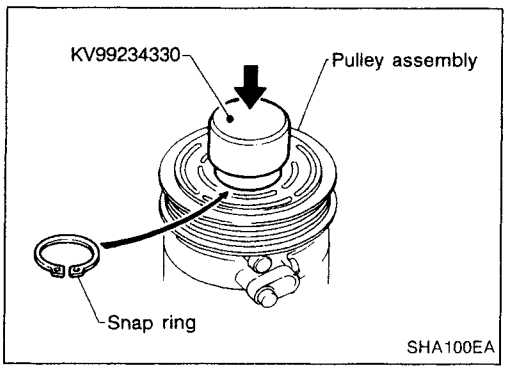

- Install the pulley assembly using the installer and a hand press, and then install the snap ring using snap ring pliers.

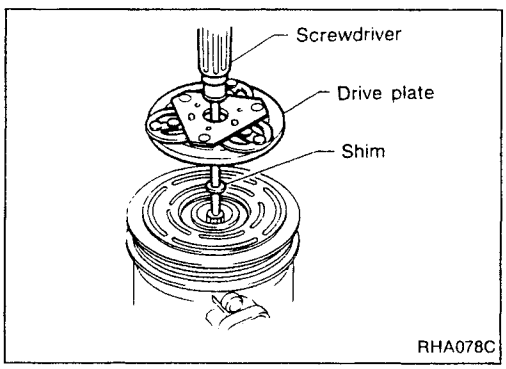

- Install the drive plate on the drive shaft, together with the original shim(s). Press the drive plate down by hand.

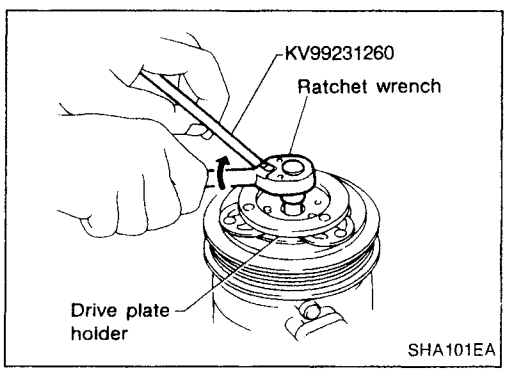

- Using the holder to prevent drive plate rotation, tighten the bolt to 12 to 15 N·m (1.2 to 1.5 kg-m, 9 to 11 ft-lb) torque.

After tightening the bolt, check that the pulley rotates smoothly.

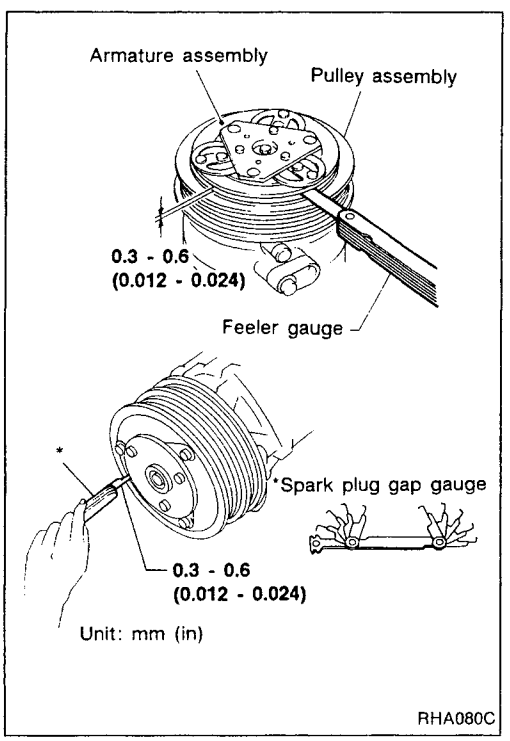

- Check clearance around the entire periphery of clutch disc.

  Disc-to-pulley clearance:

  0.3 - 0.6 mm (0.012 - 0.024 in)

  If the specified clearance is not obtained, replace adjusting spacer and readjust.

BREAK-IN OPERATION

When replacing compressor clutch assembly, always conduct the break-in operation. This is done by engaging and disengaging the clutch about thirty times. Break-in operation raises the level of transmitted torque.

HA

Simpo PDF Merge and Split Unregistered Version - http://www.simpopdf.com

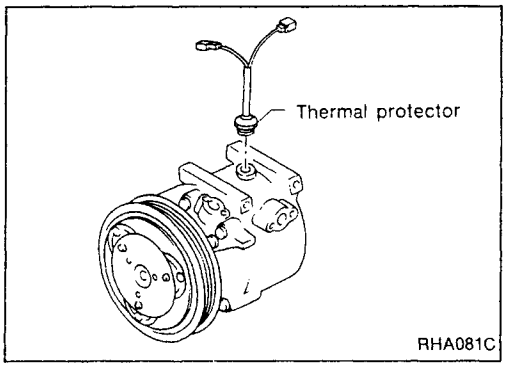

Thermal Protector

INSPECTION

- When servicing, do not allow foreign matter to get into compressor.
- Check continuity between two terminals.

Compressor — Model CR-14 (Calsonic make)

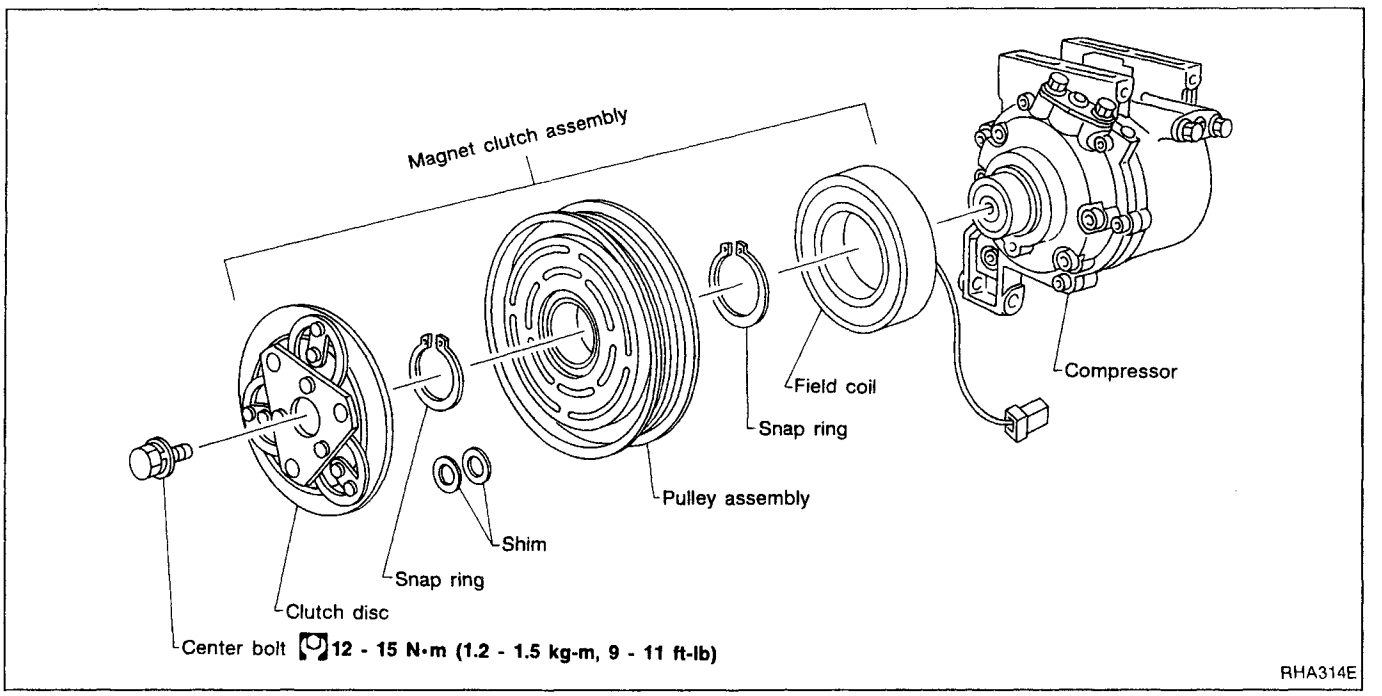

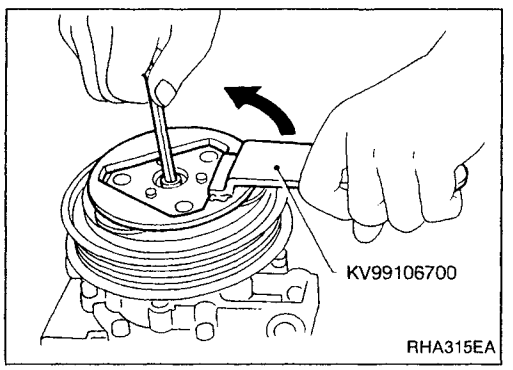

Compressor Clutch

REMOVAL

- When removing center bolt, hold clutch disc with clutch disc wrench.
- Take off clutch disc.

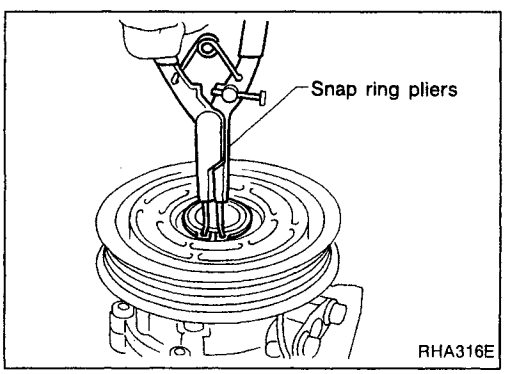

- Remove snap ring (which secures rotor pulley) by using external snap ring pliers.

Simpo PDF Merge and Split Unregistered Version - http://www.simpopdf.com

Compressor Clutch (Cont'd)

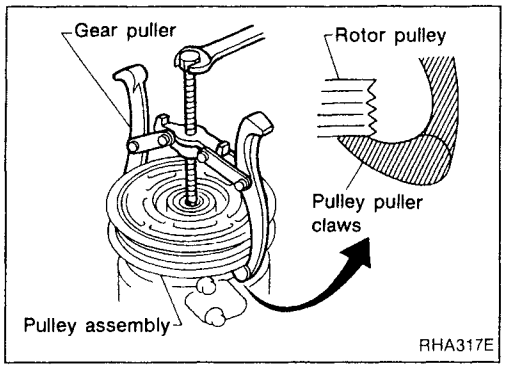

- Pulley removal
  Position the center pulley puller on the end of the drive shaft, and remove the pulley assembly using any commercially available pulley puller.
  To prevent the pulley groove from being deformed, the puller claws should be positioned onto the edge of the pulley assembly.

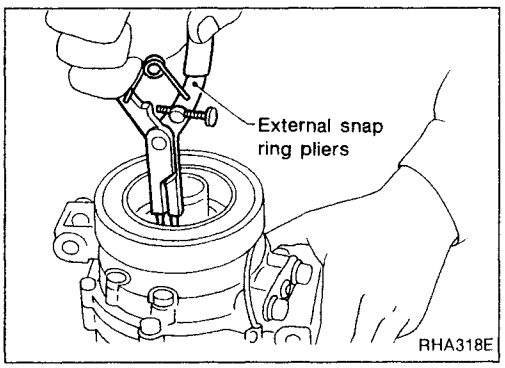

- Remove snap ring (which secures field coil) by using external snap ring pliers.

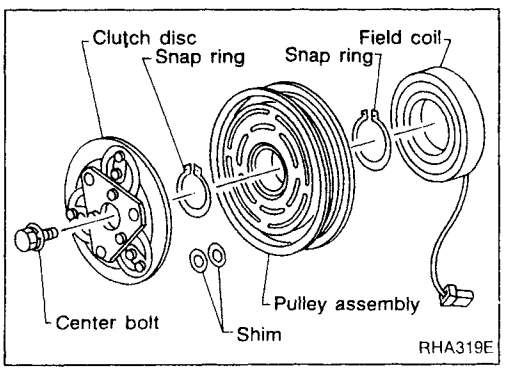

INSPECTION

Clutch disc

If the contact surface shows signs of damage due to excessive heat, the clutch disc and pulley should be replaced.

Pulley

Check the appearance of the pulley assembly. If the contact surface of the pulley shows signs of excessive grooving due to slippage, both the pulley and clutch disc should be replaced. The contact surfaces of the pulley assembly should be cleaned with a suitable solvent before reinstallation.

Coil

Check coil for loose connection or cracked insulation.

HA

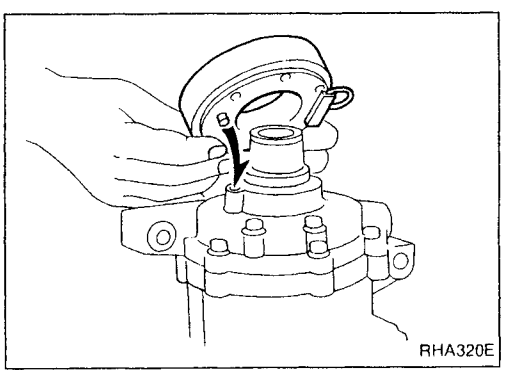

INSTALLATION

- Position the field coil.

Be sure to align the coil's pin with the hole in compressor's front head.

- Install snap ring (which secures field coil) by using external snap ring pliers.

Simpo PDF Merge and Split Unregistered Version - http://www.simpopdf.com

Compressor Clutch (Cont'd)

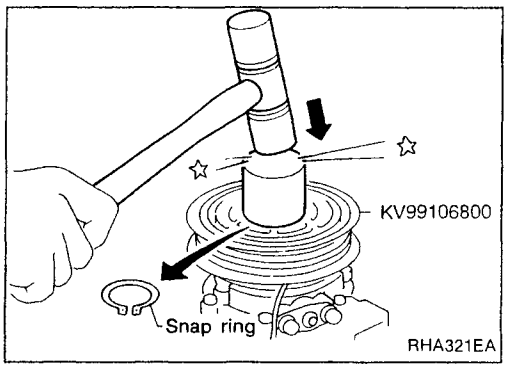

- Position and install pulley assembly securely by using plastic hammer.
- Install snap ring (which secures rotor pulley) by using external snap ring pliers.

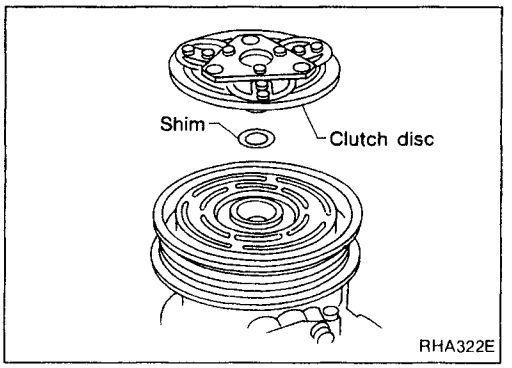

- Install the clutch disc on the drive shaft, together with the original shim(s). Press the disc down by hand.

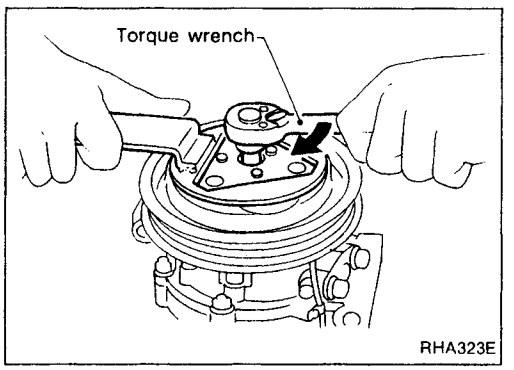

- Using the clutch wrench disc to prevent clutch disc rotation, tighten the bolt to 12 to 15 N·m (1.2 to 1.5 kg-m, 9 to 11 ft-lb) torque.

After tightening the bolt, check that the pulley rotates smoothly.

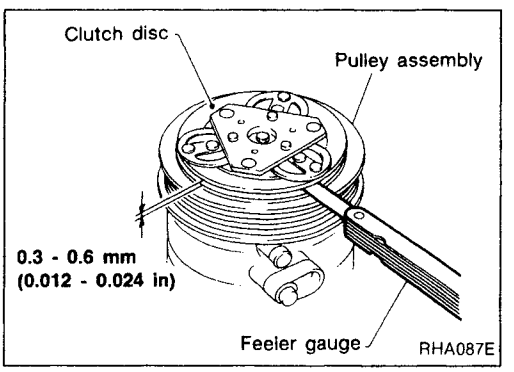

- Check clearance around the entire periphery of clutch disc.

  Disc-to-pulley clearance:

  0.3 - 0.6 mm (0.012 - 0.024 in)

  If the specified clearance is not obtained, replace adjusting spacer and readjust.

BREAK-IN OPERATION

When replacing compressor clutch assembly, do not forget break-in operation, accomplished by engaging and disengaging the clutch about thirty times. Break-in operation raises the level of transmitted torque.

Thermal Protector

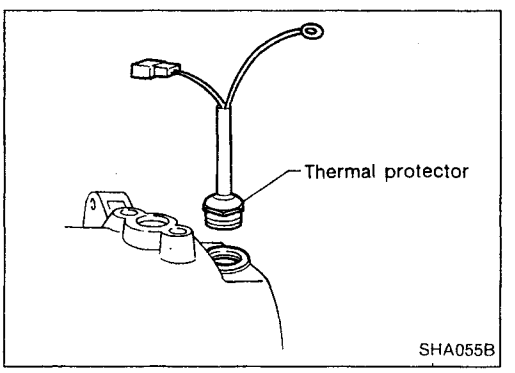

INSPECTION

- When servicing, do not allow foreign matter to get into compressor.
- Check continuity between two terminals.

Simpo PDF Merge and Split Unregistered Version - http://www.simpopdf.com

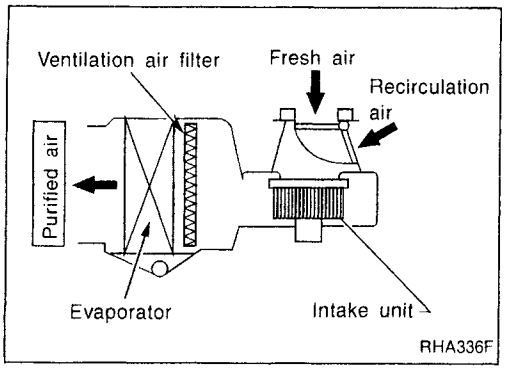

Ventilation Air Filter

FUNCTION

Air inside passenger compartment is kept clean at either recirculation or fresh mode by installing ventilation air filter into cooling unit.

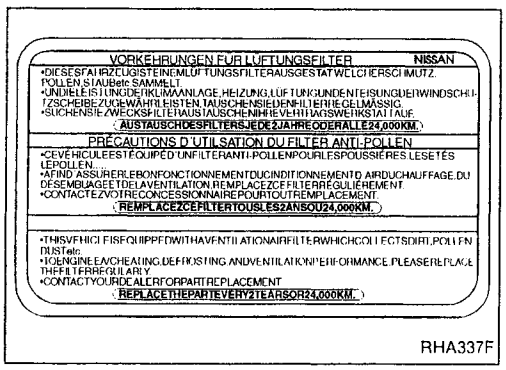

REPLACEMENT TIMING

Replace ventilation air filter every 2 years or 24,000 km (15,000 miles).
Caution label is fixed inside the glove box.

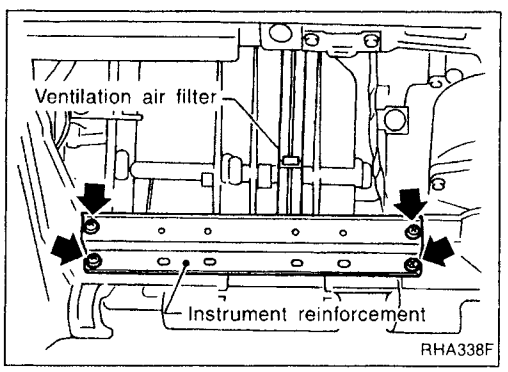

REPLACEMENT PROCEDURES

- Remove glove box which is secured with two clips.
- Remove instrument reinforcement from instrument panel.

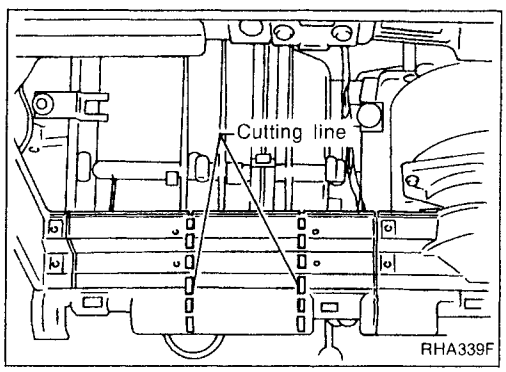

- Cut instrument panel as shown at left to remove ventilation air filter.

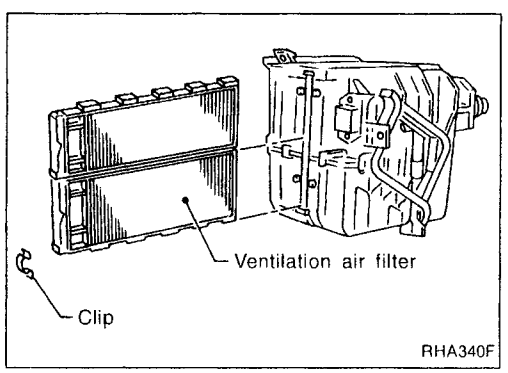

- Take out ventilation air filter which is secured with one clip, from cooling unit.
- Replace with new one and reinstall instrument reinforcement on instrument panel.
- Reinstall glove box.

HA

Simpo PDF Merge and Split Unregistered Version - http://www.simpopdf.com

General Specifications

COMPRESSOR

Model	SR20DE engine	GA14DE engine	GA15DE, GA16DE and CD20 engines
	CALSONIC make CR-14	ZEXEL make DKV-14D	ZEXEL make DKV-11D
Type	Vane rotary		
Displacement cm^3 (cu in)/Rev	144 (8.79)	140 (8.54)	110 (6.71)
Direction of rotation	Clockwise (Viewed from drive end)		
Drive belt	GA engine model: Poly V SR engine model: Poly V CD engine model: Type A		

LUBRICANT

Model	ZEXEL make DKV-11D DKV-14D	CALSONIC make CR-14
Name	Nissan A/C System Oil Type R	
Part number	KLH00-PAGR0	
Capacity mℓ (Imp fl oz)		
Total in system	200 (7.0)	180 (6.3)
Compressor (Service parts) charging amount	200 (7.0)	180 (6.3)

REFRIGERANT

Type	HFC-134a
Capacity kg (lb)	
RHD models (Except Australia)	0.45 - 0.55 (0.99 - 1.21)
Australia (SR20DE engine)	0.50 - 0.60 (1.10 - 1.32)
Australia (GA16DE engine) and LHD models for Europe	0.60 - 0.70 (1.32 - 1.54)

Inspection and Adjustment

ENGINE IDLING SPEED

When A/C is ON

Refer to EC section.

BELT TENSION

Refer to Checking Drive Belts (MA section).

COMPRESSOR

Model	DKV-11D, DKV-14D and CR-14
Clutch disc-to-pulley clearance mm (in)	0.3 - 0.6 (0.012 - 0.024)